Nissan Safari Y60 1988 TD42 gr type hardtop manual transmission 323458 - Clean Full Catalog Arabic English

Source: Nengun OEM

Format: Arabic + original language / PDF

.Generated from clean source pages

ACCESSORIES AND MISCELLANEOUS .001

الإكسسوارات والمتفرقات

GADGET HOLDER

https://www.nengun.com/oem/parts/323458/MiPwn5qAMfCfmoIwOfCfmpxINjPwn5q9MDAx8J-QiW9sZC1qcC0xMjgtSDYzLTA5LTAwMQ/Gadget+Holder/38bdd90446e9d5e0

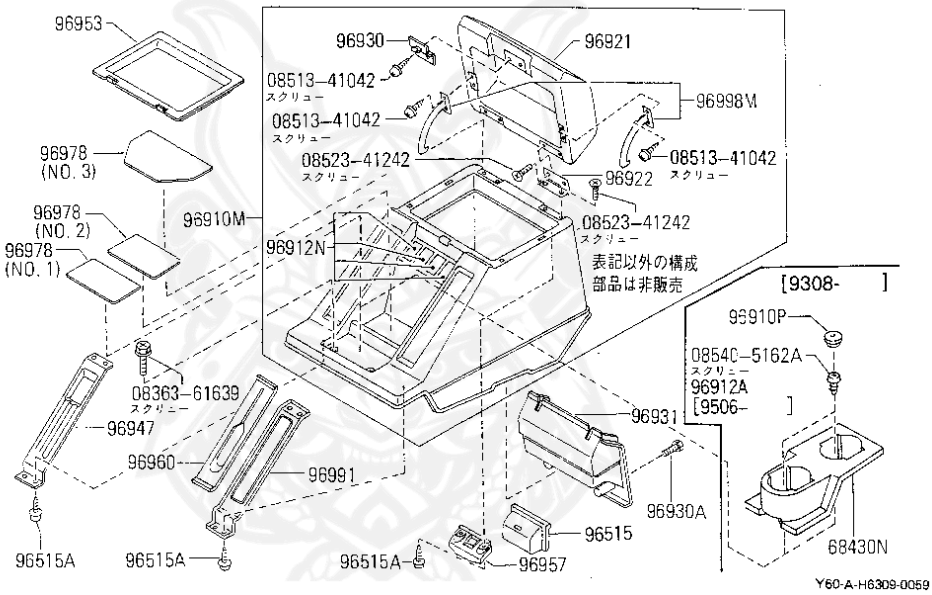

Part Number رقم القطعة	Diagram Ref مرجع المخطط	Part Name اسم القطعة	Details التفاصيل	Qty الكمية
96510-67A00	96515	Ashtray	Applicability: F Model Year: 1987-10-01 - 1993-08-01	1
96511-35F01	96515	Ashtray	Applicability: HT +V/LR +V/HR Specification: (C) Model Year: 1987-10-01 - 1991-02-01	1
01451-00581	96515A	Screw برغي	Applicability: HT +V Model Year: 1987-10-01 - 1989-09-01	0
96910-02J00	96910M	Center console	Applicability: V/LR.DX Specification: (C) Model Year: 1987-10-01 - 1993-08-01	1
96910-05J00	96910M	Box Assembly, Control Center مجموعة تحكم	Applicability: HT +V.LR.AD +V.HR +*V.DX Specification: (C) *=Riya Heater Show Model Year: 1987-10-01 - 1989-09-01	1
96910-06J00	96910M	Center console	Applicability: F Specification: (C) Model Year: 1987-10-01 - 1993-08-01	1
68491-50A12	96912N	MASK, INSTRUMENT LAMP	Applicability: HT +W +V Specification: (K) Model Year: 1987-10-01 - 1993-08-01	4
68960-51E03	96912N	MASK-CONSOLE	Applicability: HT +W +V Specification: (C) Model Year: 1987-10-01 - 1993-08-01	4
96920-02J00	96921	Stowage compartment cover غطاء	Applicability: HT +V/LR +V/HR Specification: (C) Model Year: 1987-10-01 - 1991-02-01	1
96923-01J00	96922	Hinge	Applicability: HT +V/LR +V/HR Model Year: 1987-10-01 - 1991-02-01	2
96928-01J00	96930	Lock Assembly, Console مجموعة	Applicability: HT +V/LR +V/HR Model Year: 1987-10-01 - 1991-02-01	1
01451-00581	96930A	Screw برغي	Applicability: HT +V Specification: Cover, console type Model Year: 1987-10-01 - 1989-09-01	2
96913-05J00	96931	Cover, console غطاء	Applicability: HT +V Model Year: 1987-10-01 - 1989-09-01	1
96912-01J00	96947	Plug, switch hole	Applicability: HT +V/LR +V/HR Model Year: 1987-10-01 - 1991-02-01	1
96925-01J00	96953	Pockets, Consoles, Front	Applicability: HT +V/LR +V/HR Model Year: 1987-10-01 - 1991-02-01	1
96512-01J00	96957	Bracket, cover, ashtray حامل غطاء	Applicability: HT +V/LR +V/HR Specification: (C) Model Year: 1987-10-01 - 1991-02-01	1

Part Number رقم القطعة	Diagram Ref مرجع المخطط	Part Name اسم القطعة	Details التفاصيل	Qty الكمية
96930-01J00	96960	Center console lining	Applicability: HT +V/LR +V/HR Specification: Parking Brake Model Year: 1987-10-01 - 1991-02-01	1
96941-01J00	96960	FINISHER, CONSOLE	Applicability: (HT+V/LR+V/HR).AT Specification: (C) AT Indicator Model Year: 1988-09-01 - 1991-10-01 In stock and ready to ship!	1
96973-01J02	96978	Mat, Console	Applicability: HT +V/LR +V/HR Specification: (C) NO.2 Model Year: 1987-10-01 - 1991-02-01	1
96973-01J03	96978	Matt, Console	Applicability: V/LR.DX Specification: (C) NO.3 Model Year: 1987-10-01 - 1993-08-01	1
96973-01J00	96978	Matt, Console	Applicability: (HT+V/LR+V/HR).AT Specification: (C) Poketsuto You Model Year: 1988-09-01 - 1991-10-01	1
96973-01J01	96978	Mat, Console	Applicability: HT +V/LR +V/HR Specification: (C) NO.1 Model Year: 1987-10-01 - 1991-02-01	1
96990-01J00	96991	Center console support bracket حامل	Applicability: HT +V/LR +V/HR Model Year: 1987-10-01 - 1991-02-01	1
96990-06J00	96991	Bracket, console box حامل	Applicability: F Model Year: 1987-10-01 -	1
96929-01J00	96998M	Guide	Applicability: HT +V/LR +V/HR Model Year: 1987-10-01 - 1991-02-01	1
08540-5162A	085405162A	Screw برغي		
08363-61639	0836361639	Bolt مسمار		
08513-41042	0851341042	Unknown		
08523-41242	0852341242	Screw برغي		

ACCESSORIES AND MISCELLANEOUS .002

الإكسسوارات والمتفرقات

SECURITY, ANTI-THEFT ALARM SYSTEM

https://www.nengun.com/oem/parts/323458/MiPwn5qAMfCfmoIwOfCfmpxIODDwn5q9MDAx8J-QiW9sZC1qcC0xMjgtSDgwLTA5LTAwMQ/Security%2C+Anti-theft+Alarm+System/3c09aaaa7c5e70b2

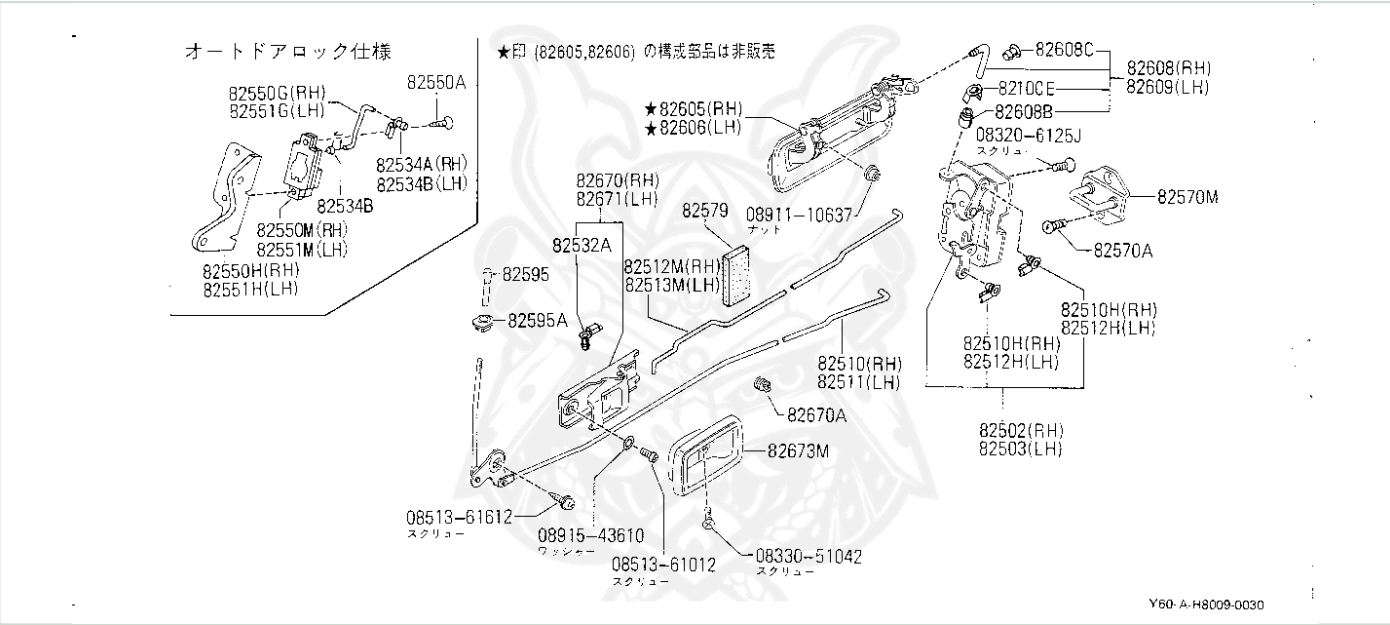

Part Number رقم القطعة	Diagram Ref مرجع المخطط	Part Name اسم القطعة	Details التفاصيل	Qty الكمية
82613-W5000	82100E	Clip مشبك	Applicability: V Model Year: 1987-10-01 - 1991-02-01	2
82502-05J00	82502	Door lock	Applicability: V.GR +*V.AD Specification: For automatic door locks Model Year: 1987-10-01 - 1991-02-01	1
82502-C6600	82502	Door lock	Applicability: V.LR +V.HR.AD Model Year: 1987-10-01 - 1989-09-01	1
82503-05J00	82503	Door lock	Applicability: V.GR +*V.AD Specification: For automatic door locks Model Year: 1987-10-01 - 1991-02-01	1
82503-C6600	82503	Door lock	Applicability: V.LR +V.HR.AD Model Year: 1987-10-01 - 1989-09-01	1
82512-06J00	82510	Door lock rod	Applicability: V Model Year: 1987-10-01 - 1991-02-01	1
80532-Q0100	82510H	Clip مشبك	Applicability: V Model Year: 1987-10-01 - 1991-02-01	2
82513-06J00	82511	Door lock rod	Applicability: V Model Year: 1987-10-01 - 1991-02-01	1
80533-Q010A	82512H	Rod Holder		
80533-Q0100	82512H	Replaced by 80533-Q010A		2
82506-06J00	82512M	Rear door inside handle (RH)	Applicability: V Model Year: 1987-10-01 - 1991-02-01	1
82507-06J00	82513M	Rear door inside handle (LH)	Applicability: V Model Year: 1987-10-01 - 1991-02-01	1
80673-01W00	82532A	Holder, Rod RH	Applicability: V Model Year: 1987-10-01 - 1991-02-01	4
80532-Q0100	82534A	Clip مشبك	Applicability: V.GR +*V.AD Model Year: 1987-10-01 - 1991-02-01	1
80533-Q010A	82534B	Rod Holder		
80533-Q0100	82534B	Replaced by 80533-Q010A		3
01125-00092	82550A	Bolt مسمار	Applicability: V.GR +*V.AD Model Year: 1987-10-01 - 1991-02-01	4

Part Number رقم القطعة	Diagram Ref مرجع المخطط	Part Name اسم القطعة	Details التفاصيل	Qty الكمية
82556-05J00	82550G	Lock, Auto Door Lock RH	Applicability: V.GR +*V.AD Model Year: 1987-10-01 - 1991-02-01	1
82558-05J00	82550H	Bracket, Auto Door Lock RH حامل	Applicability: V.GR +*V.AD Model Year: 1987-10-01 - 1991-02-01	1
82552-05J05	82550M	Actuator Assembly, Auto Rear Door Lock RH مجموعة	Applicability: V.GR +*V.AD Model Year: 1987-10-01 - 1991-02-01	1
82557-05J00	82551G	Lock, Auto Door Lock LH	Applicability: V.GR +*V.AD Model Year: 1987-10-01 - 1991-02-01	1
82559-05J00	82551H	Bracket, Auto Door Lock LH حامل	Applicability: V.GR +*V.AD Model Year: 1987-10-01 - 1991-02-01	1
82553-05J05	82551M	Actuator Assembly, Auto Rear Door Lock LH مجموعة	Applicability: V.GR +*V.AD Model Year: 1987-10-01 - 1991-02-01	1
01432-00051	82570A	Screw برغي	Applicability: V Model Year: 1987-10-01 - 1991-02-01	4
80570-01W00	82570M	Trunk lid latch striker	Applicability: V Model Year: 1987-10-01 - 1991-02-01	2
80845-D0100	82579	Insulator	Applicability: V Model Year: 1987-10-01 - 1991-02-01	2
80595-01W00	82595	Knob, Door Lock	Applicability: V Model Year: 1987-10-01 - 1991-02-01	2
80970-W5010	82595A	Gromet, Lock Knob	Applicability: V.DX+F Model Year: 1987-10-01 - 1993-08-01	2
80606-C6800	82605	Door Handle Assembly, Outside Rh مجموعة	Applicability: V Model Year: 1987-10-01 - 1991-02-01	1
80607-C6800	82606	Handle Assembly, Front Door-outside Lh مجموعة	Applicability: V Model Year: 1987-10-01 - 1991-02-01	1
82608-C6600	82608	Rod assembly, outside handle rear RH مجموعة	Applicability: V Model Year: 1987-10-01 - 1991-02-01	1
80612-U0103	82608B	Nut صامولة	Applicability: V Model Year: 1987-10-01 - 1991-02-01	2
82605-C6000	82608C	Holder, outside handle	Applicability: V Model Year: 1987-10-01 - 1991-02-01	2
82609-C6600	82609	Rod assembly, outside handle rear left مجموعة	Applicability: V Model Year: 1987-10-01 - 1991-02-01	1
80670-01J00	82670	Inner Door Handle	Applicability: V Specification: (C) Model Year: 1987-10-01 - 1991-02-01	1
80520-01W00	82670A	Holder	Applicability: V Model Year: 1987-10-01 - 1991-02-01	2
80671-01J00	82671	Inner door handle	Applicability: V Specification: (C) Model Year: 1987-10-01 - 1991-02-01	1
80682-01J00	82673M	Inside Door Handle Cover غطاء	Applicability: V Specification: (C) Model Year: 1987-10-01 - 1991-02-01	2
08320-6125J	083206125J	Unknown		
08330-51042	0833051042	Unknown		
08513-61012	0851361012	Unknown		
08513-61612	0851361612	Unknown		
08911-10637	0891110637	Nut صامولة		
08915-43610	0891543610	Unknown		

ENGINE .003
المحرك

IC ENGINE: SENSORS, UNITS, VALVES, CONTROLLERS

https://www.nengun.com/oem/parts/323458/MiPwn5qAMfCfmoIwMfCfmpxHMjjwn5q9MDAx8J-QiW9sZC1qcC0xMjgtRzI4LTAxLTAwMQ/Ic+Engine%3A+Sensors%2C+Units%2C+Valves%2C+Controllers/aecaece9cb5f510c

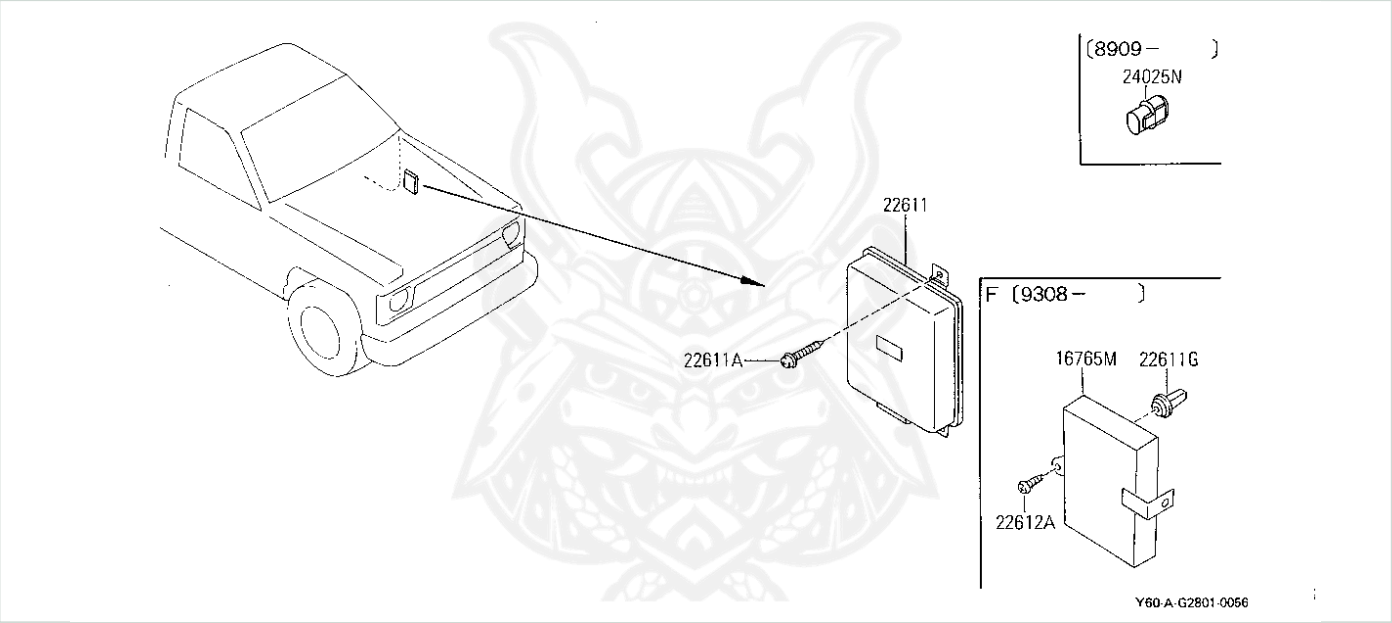

Part Number رقم القطعة	Diagram Ref مرجع المخطط	Part Name اسم القطعة	Details التفاصيل	Qty الكمية
22611-09J00	22611	Engine control unit وحدة تحكم المحرك	Applicability: TB42S Model Year: 1987-10-01 - 1988-08-01	1
22611-09J02	22611	Engine control unit وحدة تحكم المحرك	Applicability: F Model Year: 1988-08-01 - 1991-10-01	1
01461-00061	22611A	Screw برغي	Applicability: F Model Year: 1987-10-01 -	8

EXHAUST SYSTEM .004

نظام العادم

DAMPER AND FLANGE CONNECTIONS

https://www.nengun.com/oem/parts/323458/MiPwn5qAMfCfmoIwMfCfmpxBMjDwn5q9MDAx8J-QiW9sZC1qcC0xMjgtQTIwLTAxLTAwMQ/Damper+And+Flange+Connections/5e9736656fff37d6

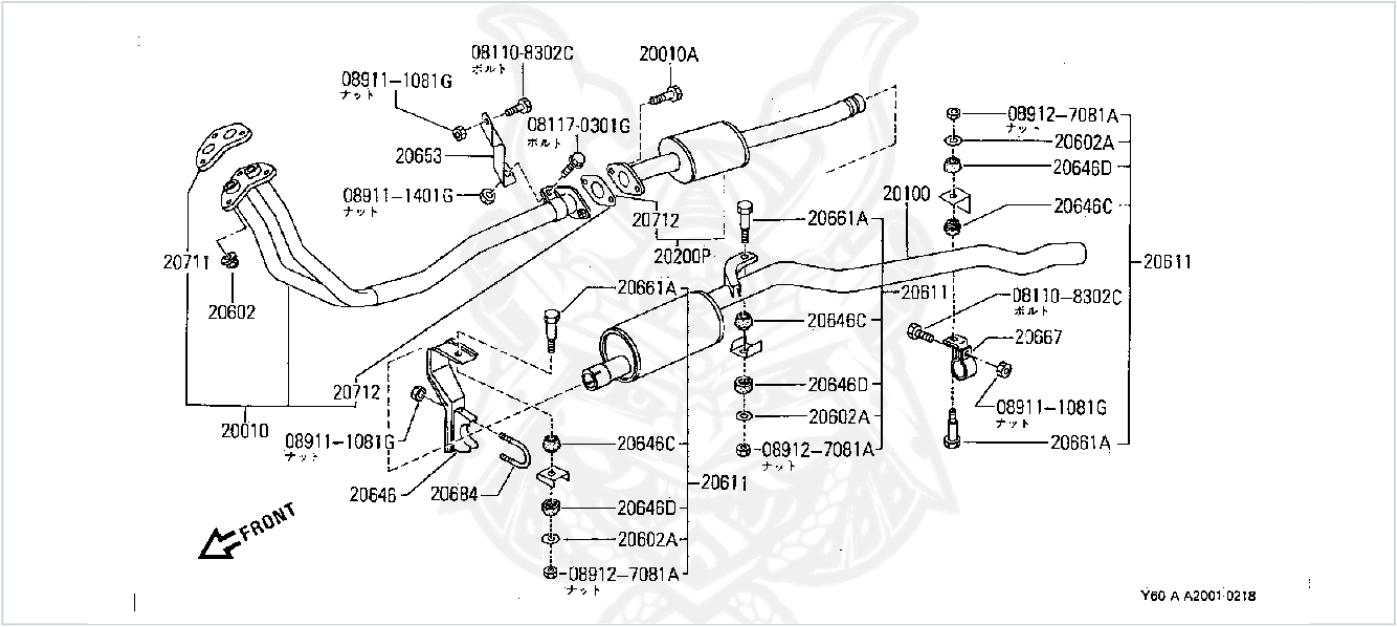

Part Number رقم القطعة	Diagram Ref مرجع المخطط	Part Name اسم القطعة	Details التفاصيل	Qty الكمية
B0020-09J02	20010	TUBE ASSEMBLY, EXHAUST FRONT مجموعة	Applicability: TB42S Specification: [B517] Model Year: 1988-03-01 - 1989-09-01	1
B0020-09J01	20010	Front Pipe, Exhaust ماسورة	Applicability: TB42S Specification: [B517] Model Year: 1987-10-01 - 1988-03-01	1
01115-00181	20010A	Fastening bolt مسمار	Applicability: TB42S Model Year: 1987-10-01 - 1989-09-01	2
20608-01G0A	20010A	Bolt مسمار		
20608-01G00	20010A	Replaced by 20608-01G0A		1
20100-06J00	20100	Muffler-assembly, Exhaust Main	Applicability: V.TD42 Specification: [B517] Model Year: 1987-10-01 - 1989-04-01	1
20100-09J00	20100	Muffler, Exhaust Main	Applicability: TB42S Specification: [B517] Model Year: 1987-10-01 - 1989-09-01	1
B0100-01J00	20100	Exhaust Main Muffler Assembly مجموعة	Applicability: HT.TD42 Specification: [B517] Model Year: 1987-10-01 - 1989-11-01	1
B0030-09J01	20200P	Tube assembly, exhaust center w/pre muffler مجموعة	Applicability: F Specification: [B517] Model Year: 1987-10-01 - 1993-08-01	1
20602-F1700	20602	Nut صامولة	Applicability: TB42S Model Year: 1987-10-01 - 1989-09-01	3
20602-41G0A	20602	Nut صامولة		
20602-41G00	20602	Replaced by 20602-41G0A		3
20135-B5000	20602A	Washer وردة	Applicability: TB42S Model Year: 1987-10-01 - 1989-09-01	3
20712-06J01	20611	Silencer holder	Applicability: TD42 Model Year: 1987-10-01 - 1989-09-01	1
20610-T8000	20611	Silencer holder	Applicability: TB42S Model Year: 1987-10-01 - 1989-09-01	3
20610-C6500	20646	Hanger, rubber, exhaust tube	Applicability: TB42S Model Year: 1987-10-01 - 1989-09-01	1
20136-B5001	20646C	Insulator, Exhaust Mounting Rubber	Applicability: V.TD42 Model Year: 1987-10-01 - 1989-09-01	4

Part Number رقم القطعة	Diagram Ref مرجع المخطط	Part Name اسم القطعة	Details التفاصيل	Qty الكمية
20137-B5001	20646D	INSULATOR ASSEMBLY-EXHAUST MOUNTING	Applicability: V.TD42 Model Year: 1987-10-01 - 1989-09-01	4
20626-09J00	20653	Bracket, Exhaust Tube حامل	Applicability: TB42S Model Year: 1987-10-01 - 1989-09-01	1
20138-B5000	20661A	Fastening bolt مسمار	Applicability: TB42S Model Year: 1987-10-01 - 1989-09-01	3
20606-06J00	20661A	Fastening bolt مسمار	Applicability: V.TD42 Model Year: 1987-10-01 - 1989-09-01	4
20675-09J01	20667	Clamp, muffler upper	Applicability: TB42S Model Year: 1987-10-01 - 1989-09-01	1
20630-J2000	20684	Silencer clamp	Applicability: TB42S Model Year: 1987-10-01 - 1989-09-01	1
20691-01P80	20711	Exhaust Gasket وجه		
20711-01P00	20711	Replaced by 20691-01P80		1
20692-02E00	20712	Exhaust Gasket وجه	Applicability: TD42 Model Year: 1987-10-01 - 1989-09-01	1
08110-8302C	081108302C	Unknown		
08117-0301G	081170301G	Unknown		
08911-1081G	089111081G	Grometsuto		
08911-1401G	089111401G	NUT صامولة		
08912-7081A	089127081A	Nut صامولة		

HEATING, A/C .005
التدفئة والتكييف

A/C COMPRESSOR

https://www.nengun.com/oem/parts/323458/MiPwn5qAMfCfmoIzMPCfmpxHMjfwn5q9MDAy8J-QiW9sZC1qcC0xMjgtRzI3LTMwLTAwMg/A%2Fc+Compressor/2cc0e0c60842350f

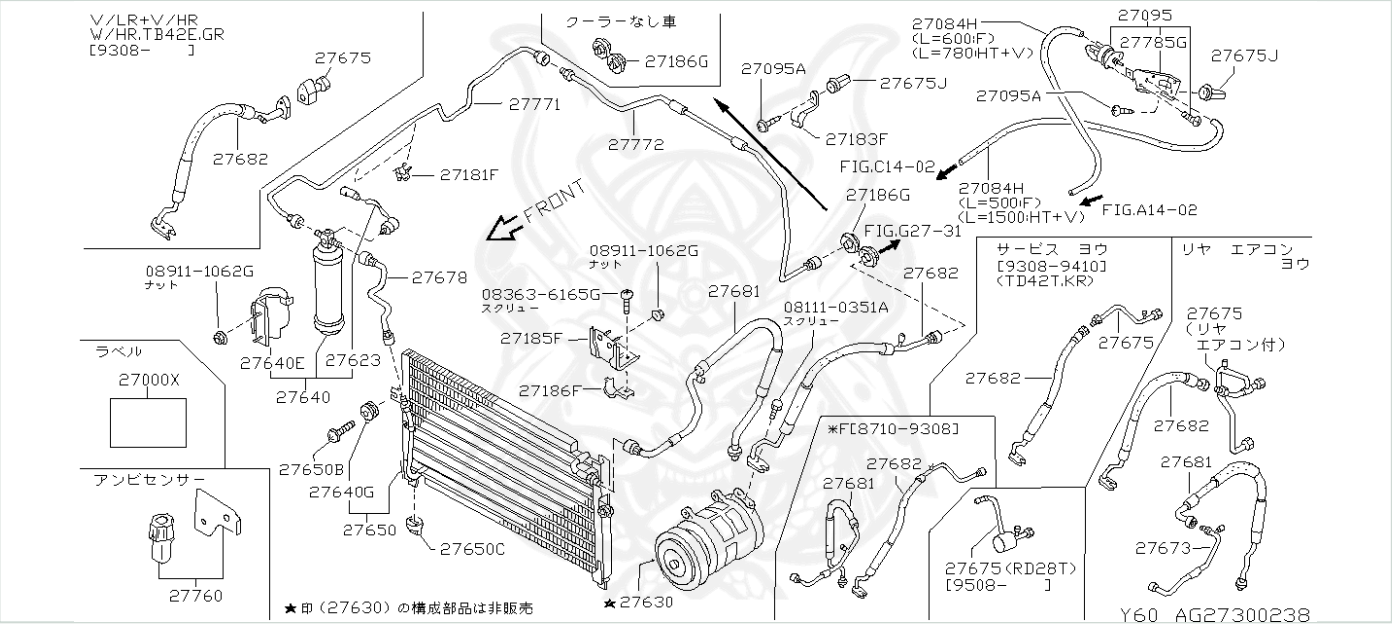

Part Number رقم القطعة	Diagram Ref مرجع المخطط	Part Name اسم القطعة	Details التفاصيل	Qty الكمية
27721-Y0112	27084H	Vacuum pipe ماسورة	Applicability: *F Specification: L=500 S/#B7796-89902 Air Conditioner [A608] Model Year: 1987-10-01 - 1993-08-01	2
27726-Y0113	27084H	Vacuum pipe ماسورة	Applicability: *F Specification: L=600 S/#B7796-89903 Air Conditioner [A608] Model Year: 1987-10-01 - 1993-08-01	2
27735-Y0113	27084H	Hose خرطوم	Applicability: *(HT+V/LR+V/HR) Specification: L=780 S/#B779689903 Air Conditioner [A608] Model Year: 1987-10-01 - 1991-02-01	1
27766-D0112	27084H	Vacuum pipe ماسورة	Applicability: *(HT+V/LR+V/HR) Specification: L=1500S/#B779689902 Air Conditioner Model Year: 1987-10-01 - 1991-02-01	1
27780-01J00	27095	Valve, Vacuum Magnet صمام	Applicability: *F Specification: For air conditioners Model Year: 1987-10-01 - 1993-08-01	2
27780-01J05	27095	Valve, Vacuum Magnet صمام	Applicability: *(HT+V/LR+V/HR) Specification: For air conditioners Model Year: 1987-10-01 - 1991-02-01	1
01466-00071	27095A	Screw برغي	Applicability: *F Specification: For air conditioners Model Year: 1987-10-01 - 1993-08-01	8
17557-M7300	27181F	Clip مشبك	Applicability: *(HT+V/LR+V/HR) Specification: For air conditioners Model Year: 1987-10-01 - 1991-10-01	3
92553-01J00	27183F	Clip مشبك	Applicability: *F Specification: For air conditioners Model Year: 1987-10-01 - 1993-08-01	4
92550-01J00	27185F	Clip مشبك	Applicability: *F Specification: For air conditioners Model Year: 1987-10-01 - 1991-10-01	2
92551-01J00	27186F	Clip مشبك	Applicability: *F Specification: For air conditioners Model Year: 1987-10-01 - 1993-08-01	1
92570-01J00	27186G	CAP, CONNECTOR غطاء	Applicability: F Model Year: 1987-10-01 -	1
92560-01J20	27186G	Grommet, Rubber	Applicability: *F Specification: For air conditioners Model Year: 1987-10-01 - 1993-08-01	1
92137-01J00	27623	Switch Assembly, High Pressure مجموعة	Applicability: *F Specification: For air conditioners Model Year: 1987-10-01 - 1993-08-01	1
92600-01J05	27630	Air conditioner compressor هواء	Applicability: *(HT+V/LR+V/HR) Specification: For air conditioners [B517] Model Year: 1987-10-01 - 1989-10-01	1
92600-01J00	27630	Air conditioner compressor هواء	Applicability: *F Specification: For air conditioners Model Year: 1987-10-01 - 1989-10-01	1

Part Number رقم القطعة	Diagram Ref مرجع المخطط	Part Name اسم القطعة	Details التفاصيل	Qty الكمية
92130-01J00	27640	LIQUID TANK ASSEMBLY مجموعة	Applicability: *(HT+V/LR+V/HR) Specification: For air conditioners [B517] Model Year: 1987-10-01 - 1991-02-01	1
92135-01J00	27640E	Liquid Tank Bracket حامل	Applicability: *F Specification: For air conditioners Model Year: 1987-10-01 - 1993-08-01	2
92118-10V00	27640G	Mounting, Rubber - Capacitor - Upper	Applicability: *F Specification: For air conditioners [B421] Model Year: 1987-10-01 - 1993-08-01	2
92101-01J00	27650	Condenser Assembly مجموعة	Applicability: *F Specification: For air conditioners Model Year: 1987-10-01 - 1993-08-01	2
01436-00511	27650B	Fastening bolt مسمار	Applicability: *F Specification: Air conditioner Model Year: 1987-11-01 - 1993-08-01	2
92119-51E00	27650C	Mounting - Rubber - Capacitor - Lower	Applicability: *(HT+V/LR+V/HR) Specification: For air conditioners Model Year: 1987-10-01 - 1991-02-01	2
90394-H9300	27675J	Grommet, Screw برغي	Applicability: *F Specification: Clutch assist included Model Year: 1987-10-01 - 1993-08-01	10
92446-06J00	27678	Tube, condenser, liquid tank	Applicability: *F Specification: For air conditioners Model Year: 1987-10-01 - 1993-08-01	2
92490-06J00	27681	Hoses, Flexible High	Applicability: *(HT+V/LR+V/HR) Specification: For air conditioners Model Year: 1987-10-01 - 1990-03-01	1
92490-09J00	27681	Air conditioner tube هواء	Applicability: *F Specification: For air conditioners Model Year: 1987-10-01 - 1991-10-01	1
92480-06J00	27682	Hoses, Flexible	Applicability: *(HT+V/LR+V/HR) Specification: For air conditioners Model Year: 1987-10-01 - 1990-03-01	1
92480-09J00	27682	Air conditioner tube هواء	Applicability: *F Specification: For air conditioners Model Year: 1987-10-01 - 1991-10-01	1
92440-01J00	27771	Tube, Liquid Tank Two Evaporator No. 1	Applicability: *(HT+V/LR+V/HR) Specification: For air conditioners Model Year: 1987-10-01 - 1991-02-01	1
92442-01J00	27772	Tube, Tank to Evaporator No 2	Applicability: *(HT+V/LR+V/HR) Specification: For air conditioners Model Year: 1987-10-01 - 1991-02-01	1
27782-01J00	27785G	Bracket حامل	Applicability: *F Specification: For air conditioners Model Year: 1987-10-01 - 1993-08-01	1
08111-0351A	081110351A	Unknown		
08363-6165G	083636165G	Kyatsup, Hetsdramp		
08911-1062G	089111062G	Nut صامولة		

HEATING, A/C .006
التدفئة والتكييف

INTERIOR HEATER RADIATOR

https://www.nengun.com/oem/parts/323458/MiPwn5qAMfCfmoIzMfCfmpxHMjfwn5q9MDAx8J-QiW9sZC1qcC0xMjgtRzI3LTMxLTAwMQ/Interior+Heater+Radiator/e375f56c685649ec

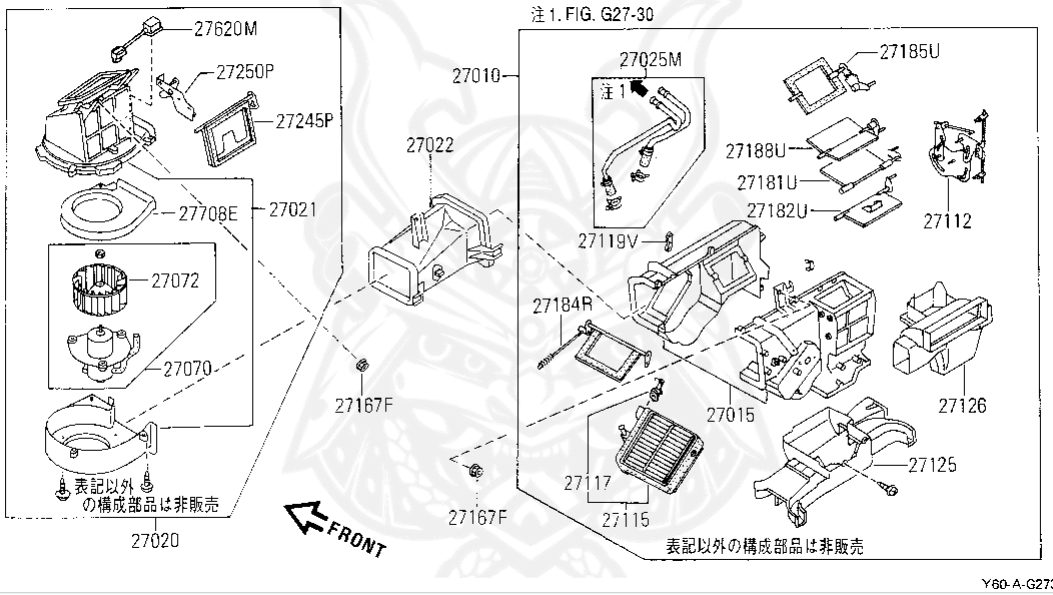

Part Number رقم القطعة	Diagram Ref مرجع المخطط	Part Name اسم القطعة	Details التفاصيل	Qty الكمية
27110-01J10	27010	Heating Unit Assembly, Front وحدة مجموعة	Applicability: F Model Year: 1987-10-01 -	1
27120-01J10	27015	Heater-blower housing	Applicability: F Model Year: 1987-10-01 - 1995-04-01	1
27200-01J00	27020	Heater-blower housing	Applicability: F Model Year: 1987-10-01 -	1
27200-01J05	27020	Heater-blower housing	Applicability: HT +V/LR +V/HR Model Year: 1987-10-01 - 1991-02-01	1
27235-01J00	27021	Heater air duct housing هواء	Applicability: F Model Year: 1987-10-01 -	2
27850-01J00	27022	Air duct, intake هواء	Applicability: F Model Year: 1987-10-01 -	1
27850-01J05	27022	DUCT, AIR INTAKE هواء	Applicability: HT +V/LR +V/HR Model Year: 1987-10-01 - 1991-02-01	1
27144-01J00	27025M	Coolant hose خرطوم	Applicability: HT +V/LR +V/HR Specification: [B517] Model Year: 1987-10-01 - 1991-02-01	1
27220-01J00	27070	Cabin heater electric motor	Applicability: F Model Year: 1987-10-01 - 1993-07-01	1
27220-01J05	27070	Blower Motor & Fan Assembly مجموعة	Applicability: HT +V/LR +V/HR Model Year: 1987-10-01 - 1991-02-01	1
27230-41L00	27072	Fan Atssenbury, Blower	Applicability: F Model Year: 1987-10-01 - 1993-07-01	1
27155-01F00	27112	Link Assemble, Side	Applicability: F Model Year: 1987-10-01 - 1993-07-01	1
27140-41L11	27115	Heating radiator	Applicability: F Model Year: 1987-10-01 - 1993-07-01	1
92240-N8220	27117	Front Heater Cock Assembly مجموعة	Applicability: F Model Year: 1987-10-01 -	1
27157-01J00	27119V	Lever, Heater Unit وحدة	Applicability: HT +V/LR +V/HR Specification: Water bottle Model Year: 1987-10-01 - 1991-02-01	1
27130-01J10	27125	Duct, foot	Applicability: F Specification: [B517] Model Year: 1987-10-01 - 1993-07-01	1
27135-01J00	27126	Duct assembly, vent مجموعة	Applicability: F Model Year: 1987-10-01 - 1993-07-01	1

Part Number رقم القطعة	Diagram Ref مرجع المخطط	Part Name اسم القطعة	Details التفاصيل	Qty الكمية
01225-00371	27167F	Nut صامولة	Applicability: F Model Year: 1987-10-01 -	10
27181-01J00	27181U	Air conditioner housing flap هواء	Applicability: F Model Year: 1987-10-01 - 1993-07-01	1
27182-50A00	27182U	Air conditioner housing flap هواء	Applicability: F Model Year: 1987-10-01 - 1993-07-01	1
27180-01E00	27184R	Door, Mix	Applicability: F Model Year: 1987-10-01 - 1993-07-01	1
27183-01J00	27185U	Door Assembly, Foot مجموعة	Applicability: F Model Year: 1987-10-01 - 1993-07-01	1
27188-50A00	27188U	Door assembly, defroster مجموعة	Applicability: F Model Year: 1987-10-01 - 1993-07-01	1
27245-01J00	27245P	Door, intake blower, front	Applicability: F Model Year: 1987-10-01 - 1993-07-01	1
27250-01J00	27250P	Lever assembly, intake door front مجموعة	Applicability: F Model Year: 1987-10-01 - 1993-07-01	1
27238-01J00	27708E	Bracket حامل	Applicability: F Model Year: 1987-10-01 -	2

HEATING, A/C .007
التدفئة والتكييف

AIR DUCTS

هواء

https://www.nengun.com/oem/parts/323458/MiPwn5qAMfCfmoIzMvCfmpxHMjfwn5q9MDAz8J-QiW9sZC1qcC0xMjgtRzI3LTMyLTAwMw/Air+Ducts/c70bd59f2763e18a

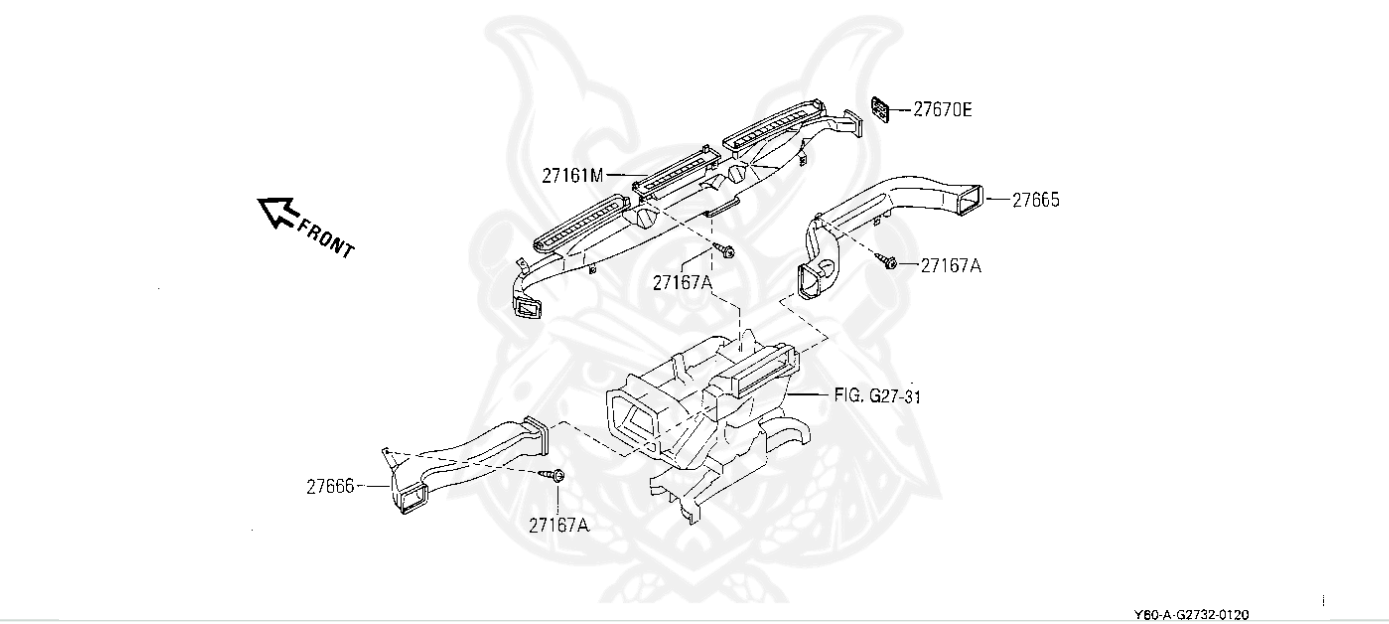

Part Number رقم القطعة	Diagram Ref مرجع المخطط	Part Name اسم القطعة	Details التفاصيل	Qty الكمية
27800-01J00	27161M	Windscreen blower deflector	Applicability: F Model Year: 1987-10-01 -	1
01466-00071	27167A	Screw برغي	Applicability: F Model Year: 1987-10-01 -	15
27870-01J00	27665	Air duct هواء	Applicability: F Model Year: 1987-10-01 -	1
27871-01J00	27666	Abin air conditioning, iso_code: heater air duct هواء هواء	Applicability: F Model Year: 1987-10-01 -	1
27896-01J00	27670E	Seals, ducts, and instruments	Applicability: F Model Year: 1987-10-01 -	2

TRANSMISSION, GEARBOX .008
ناقل الحركة / القير

TRANSMISSION SENSORS, UNITS, VALVES, CONTROLLERS

ناقل الحركة

https://www.nengun.com/oem/parts/323458/MiPwn5qAMfCfmoIwMfCfmpxEMzTwn5q9MDAx8J-QiW9sZC1qcC0xMjgtRDM0LTAxLTAwMQ/Transmission+Sensors%2C+Units%2C+Valves%2C+Controllers/e38c89d071186833

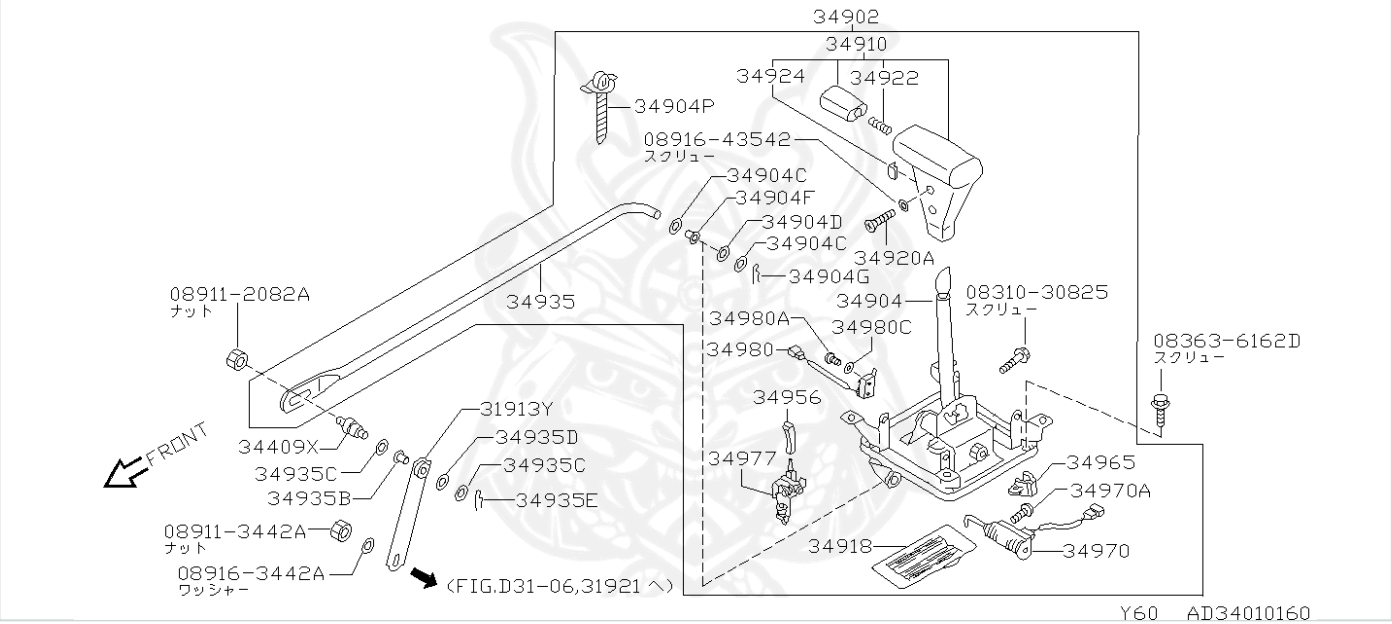

Part Number رقم القطعة	Diagram Ref مرجع المخطط	Part Name اسم القطعة	Details التفاصيل	Qty الكمية
31913-01J00	31913Y	Lever, select range	Applicability: TD42.AT Model Year: 1988-09-01 - 1991-10-01	1
34409-01J00	34409X	Pin, pivot	Applicability: TD42.AT Model Year: 1988-09-01 - 1991-10-01	1
34901-02J10	34902	Gear shift mechanism	Applicability: TD42.AT Specification: (C) Model Year: 1988-09-01 - 1989-09-01	1
34904-02J10	34904	Gearshift lever	Applicability: TD42.AT Model Year: 1988-09-01 - 1989-09-01	1
36522-68200	34904C	Washer وردة	Applicability: TD42.AT Model Year: 1988-09-01 - 1991-10-01	2
34419-04100	34904D	Washer وردة	Applicability: TD42.AT Model Year: 1988-09-01 - 1991-10-01	1
34552-V5200	34904F	Insulator, Rod	Applicability: TD42.AT Model Year: 1988-09-01 - 1991-10-01	1
01532-00022	34904G	Fastening bolt مسمار	Applicability: TD42.AT Model Year: 1988-09-01 - 1991-10-01	1
34910-02J10	34910	Gear shift knob	Applicability: TD42.AT Specification: (C) Model Year: 1988-09-01 - 1989-09-01	1
01413-00051	34920A	Fastening bolt مسمار	Applicability: TD42.AT Model Year: 1988-09-01 - 1991-10-01	2
34922-01P00	34922	Spring, Return button	Applicability: TD42.AT Model Year: 1988-09-01 - 1991-10-01	1
34924-50G00	34924	Mask, switch hole	Applicability: TD42.AT Model Year: 1988-09-01 - 1991-10-01	1
34935-01J00	34935	Mechanical gearbox cable قير	Applicability: TD42.AT Model Year: 1988-09-01 - 1991-10-01	1
34552-V5200	34935B	Insulator	Applicability: TD42.AT Model Year: 1988-09-01 - 1991-10-01	1
36522-68200	34935C	Washer وردة	Applicability: TD42.AT Model Year: 1988-09-01 - 1991-10-01	2
34419-04100	34935D	Washer وردة	Applicability: TD42.AT Model Year: 1988-09-01 - 1991-10-01	1
01532-00022	34935E	Fastening bolt مسمار	Applicability: TD42.AT Model Year: 1988-09-01 - 1991-10-01	1
34965-02J10	34965	Butsushu, Stopper	Applicability: TD42.AT Model Year: 1988-09-01 - 1989-09-01	1

Part Number رقم القطعة	Diagram Ref مرجع المخطط	Part Name اسم القطعة	Details التفاصيل	Qty الكمية
34970-02J10	34970	Automatic gearbox gear position sensor قير حساس	Applicability: TD42.AT Model Year: 1988-09-01 - 1989-09-01	1
34980-02J10	34980	Park Position Switch	Applicability: TD42.AT Model Year: 1988-09-01 - 1989-09-01	1
C4973-36F10	34980A	Fastening bolt مسمار	Applicability: TD42.AT Model Year: 1988-09-01 - 1989-09-01	2
C4974-36F10	34980C	WATSUSHA-	Applicability: TD42.AT Model Year: 1988-09-01 - 1989-09-01	2
08360-6162D	083636162D	Bolt مسمار		
08363-6162D	083636162D	Replaced by 08360-6162D		
08911-2082A	089112082A	Unknown		
08911-3442A	089113442A	Unknown		
08916-3442A	089163442A	Unknown		
08310-30825	0831030825	Unknown		
08916-43542	0891643542	Washer وردة		

TRANSMISSION, GEARBOX .009
ناقل الحركة / القير

TRANSMISSION REPAIR KITS

ناقل الحركة

https://www.nengun.com/oem/parts/323458/MiPwn5qAMfCfmoIwNPCfmpxEMzDwn5q9MDBB8J-QiW9sZC1qcC0xMjgtRDMwLTA0LTAwQQ/Transmission+Repair+Kits/a535be5c481b5773

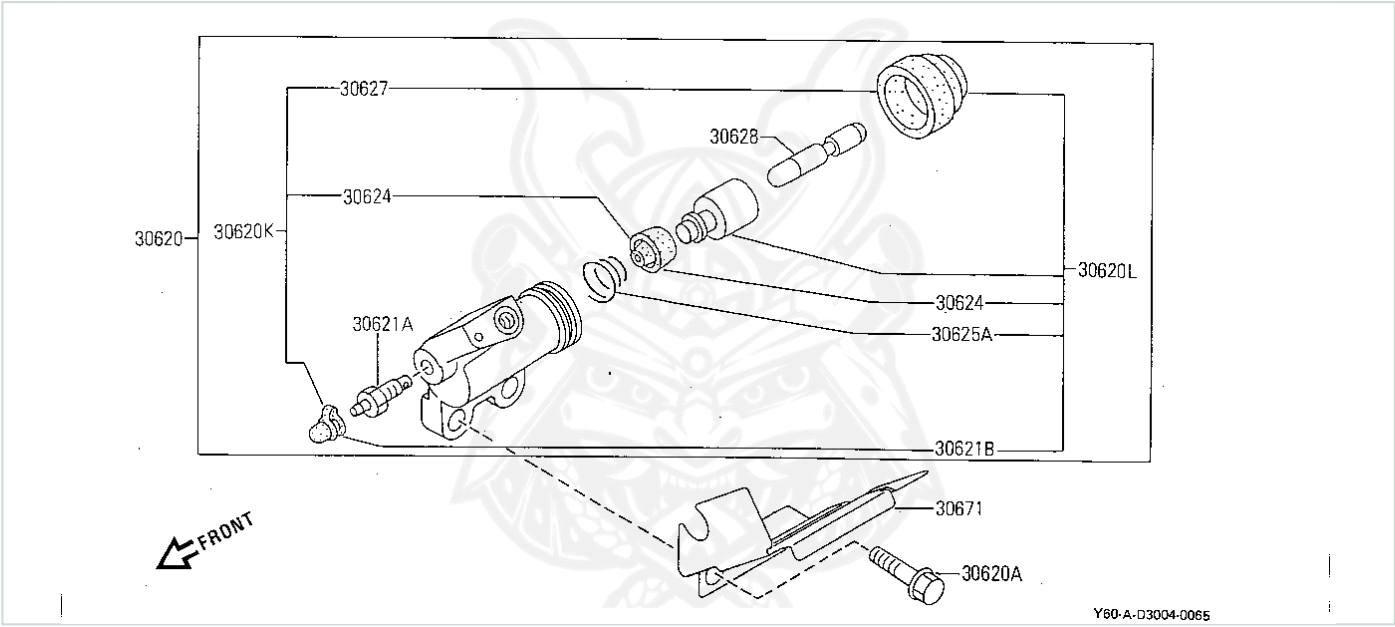

Part Number رقم القطعة	Diagram Ref مرجع المخطط	Part Name اسم القطعة	Details التفاصيل	Qty الكمية
30620-01J01	30620	Slave clutch cylinder	Applicability: TD42 Specification: Nabco 3/4 Model Year: 1987-10-01 - 1991-10-01	1
30678-01J00	30620A	Fastening bolt مسمار	Applicability: TD42 Model Year: 1987-10-01 - 1991-10-01	1
30622-26E25	30620K	Clutch slave cylinder repair kit	Applicability: TD42 Specification: Nabco 3/4 Model Year: 1987-10-01 - 1991-10-01	1
30621-26E25	30620L	Clutch slave cylinder repair kit	Applicability: TD42 Specification: Nabco 3/4 Model Year: 1987-10-01 - 1991-10-01	1
41128-26E00	30621A	Fastening bolt مسمار	Applicability: TD42 Specification: Nabco Model Year: 1987-10-01 - 1991-10-01	1
41129-U0201	30621B	Cap, Breeder غطاء	Applicability: TD42 Specification: Nabco Model Year: 1987-10-01 - 1991-10-01	1
30624-21000	30624	Cup, Piston Clutch Damper -	Applicability: TD42 Specification: Nabco Model Year: 1987-10-01 - 1991-10-01	1
30622-W7000	30625A	Spring, Piston	Applicability: TD42 Specification: Nabco Model Year: 1987-10-01 - 1991-10-01	1
30627-16E00	30627	COVER, DUST غطاء	Applicability: TD42 Specification: Nabco Model Year: 1987-10-01 - 1991-10-01	1
30628-B5000	30628	Rod, push	Applicability: TB42S +TD42 Specification: Nabco Model Year: 1987-10-01 - 1991-10-01	1
30670-01J00	30671	Heat Insulator Assembly, Clutch Operating مجموعة	Applicability: TD42 Model Year: 1987-10-01 - 1991-10-01	1

STEERING .010

الدركسون / التوجيه

STEERING SENSORS, UNITS, VALVES, CONTROLLERS

توجيه

https://www.nengun.com/oem/parts/323458/MiPwn5qAMfCfmoIwM_CfmpxHMjTwn5q9MDAx8J-QiW9sZC1qcC0xMjgtRzI0LTAzLTAwMQ/Steering+Sensors%2C+Units%2C+Valves%2C+Controllers/1743a97f7d7d7320

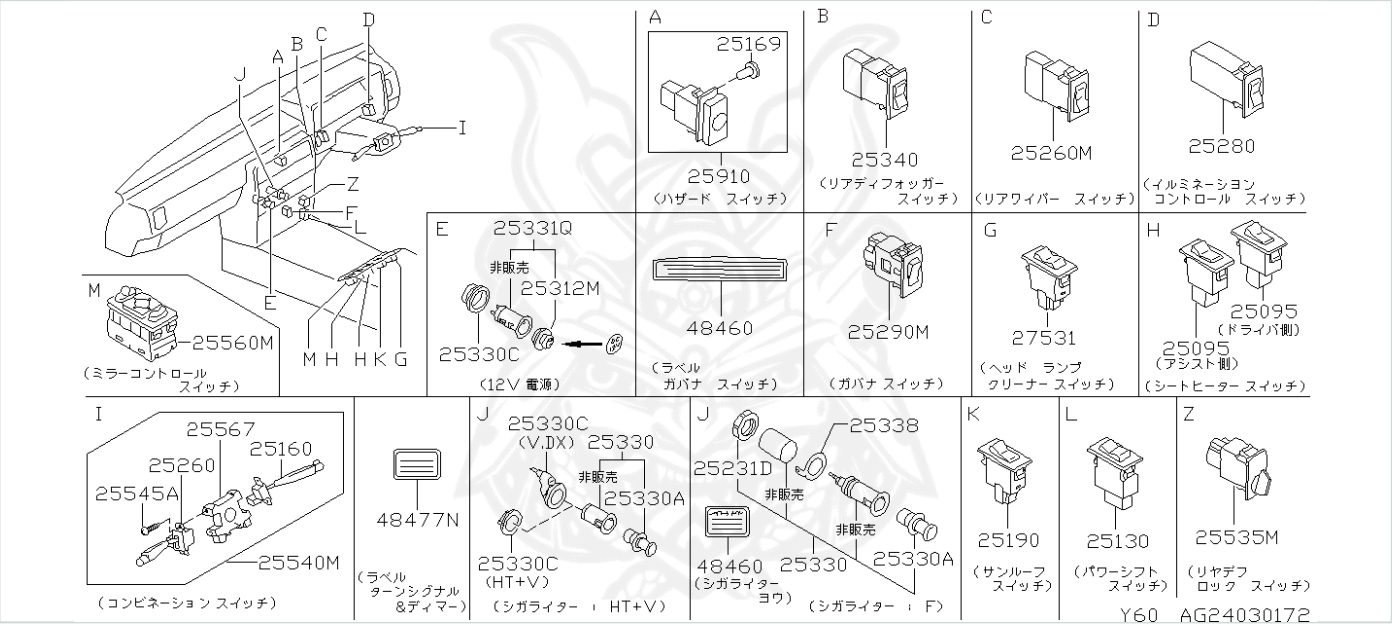

Part Number رقم القطعة	Diagram Ref مرجع المخطط	Part Name اسم القطعة	Details التفاصيل	Qty الكمية
25500-C8060	25095	Operating unit for seat adjustment وحدة	Applicability: *HT +*V.LR.AD +*V.HR Specification: Driver's heated seat Model Year: 1987-10-01 - 1989-09-01	1
25500-C8070	25095	Heater Switch Assembly مجموعة	Applicability: *HT +*V.LR.AD +*V.HR Specification: Assisted heated seat Model Year: 1987-10-01 - 1989-09-01	1
25540-11V00	25160	Switch Assembly, Turn Signal مجموعة	Applicability: F Model Year: 1987-10-01 -	1
25169-01J00	25169	Halogen lamp	Applicability: HT +V/LR +V/HR Model Year: 1987-10-01 - 1991-02-01	1
25180-G3900	25190	SWITCH ASSEMBLY-SUNROOF	Applicability: *V/HR Specification: Roof sunroof Model Year: 1987-10-01 - 1991-02-01	1
25190-01C00	25190	Switch مفتاح	Applicability: *V/HR Specification: Console Sunroof Design Model Year: 1987-10-01 - 1991-02-01	1
25334-C7100	25231D	Nut صامولة	Applicability: F Model Year: 1987-10-01 -	1
25260-11V00	25260	Wiper Switch Assembly مجموعة	Applicability: F Model Year: 1987-10-01 -	1
25260-01J00	25260M	Wiper switch	Applicability: (HT+V/LR+V/HR).AD *V/LR.DX Specification: *=RIYAWAIPA-YOU Model Year: 1987-10-01 - 1991-02-01	1
25980-05J00	25280	Dashboard light switch	Applicability: HT +V.LR.AD +V.HR Model Year: 1987-10-01 - 1989-09-01	1
21730-09J00	25290M	Switch assembly, governor مجموعة	Applicability: F Model Year: 1987-10-01 - 1991-10-01	1
25330-T8901	25330	Cigarette Lighter - Complete	Applicability: F Model Year: 1987-10-01 -	1
25331-01J00	25330	CIGARETTE LIGHTER	Applicability: HT +V/LR +V/HR Model Year: 1987-10-01 - 1991-02-01	1
25335-89953	25330A	Nobu & Heater Atsusemburi, Cigarette Lighter	Applicability: F Model Year: 1987-10-01 -	1
25335-01J00	25330A	KNOB & HEATER ASSEMBLY-CIGARETTE LIGHTER	Applicability: HT +V/LR +V/HR Model Year: 1987-10-01 - 1991-02-01	1
25339-01J01	25330C	PROTECTOR	Applicability: HT +V.LR.AD +V.HR Model Year: 1987-10-01 - 1989-09-01	1

Part Number رقم القطعة	Diagram Ref مرجع المخطط	Part Name اسم القطعة	Details التفاصيل	Qty الكمية
25339-89989	25330C	Cigarette Lighter Ring	Applicability: V/LR.DX Model Year: 1987-10-01 - 1993-08-01	1
25338-89900	25338	Plate, Earth Cigarette Lighter	Applicability: F Model Year: 1987-10-01 -	1
25350-01J03	25340	Window heater switch	Applicability: HT +V.LR.AD +V.HR +*V.DX Specification: *=Rear wiper Model Year: 1987-10-01 - 1989-09-01	1
25535-06J00	25535M	Switch, Rear Differential Lock	Applicability: *(HT+V/LR+V/HR) Specification: No name, defrost, design Model Year: 1988-09-01 - 1989-09-01	1
25560-11V00	25540M	Switch Assembly, Combination مجموعة	Applicability: F Model Year: 1987-10-01 -	1
25365-5L300	25545A	Screw برغي	Applicability: F Model Year: 1987-10-01 -	4
25567-11V00	25567	Body combination switch بودي	Applicability: F Model Year: 1987-10-01 -	1
25290-01J00	25910	Sweets Assembly, Hazado مجموعة	Applicability: HT +V/LR +V/HR Model Year: 1987-10-01 - 1991-02-01	1
25290-05J00	25910	Emergency signal button	Applicability: F Model Year: 1987-10-01 -	1
25530-03E00	27531	Switch, Headlamp Lamp Cleaner	Applicability: HT +V.LR.AD +V.HR Model Year: 1987-10-01 - 1989-09-01	1
24313-C7420	48460	Label, Caution Instrument	Applicability: HT +V/LR +V/HR Specification: Cigarette lighter Model Year: 1987-10-01 - 1991-02-01	1
48460-09J00	48460	Label, Caution Instrument	Applicability: F Specification: GABANA SUITSUCHI YOU Model Year: 1987-10-01 -	1

STEERING .011
الدركسون / التوجيه

STEERING WHEEL

توجيه عجلة

https://www.nengun.com/oem/parts/323458/MiPwn5qAMfCfmoIwNPCfmpxGNDjwn5q9MDAx8J-QiW9sZC1qcC0xMjgtRjQ4LTA0LTAwMQ/Steering+Wheel/17b21498629aadd8

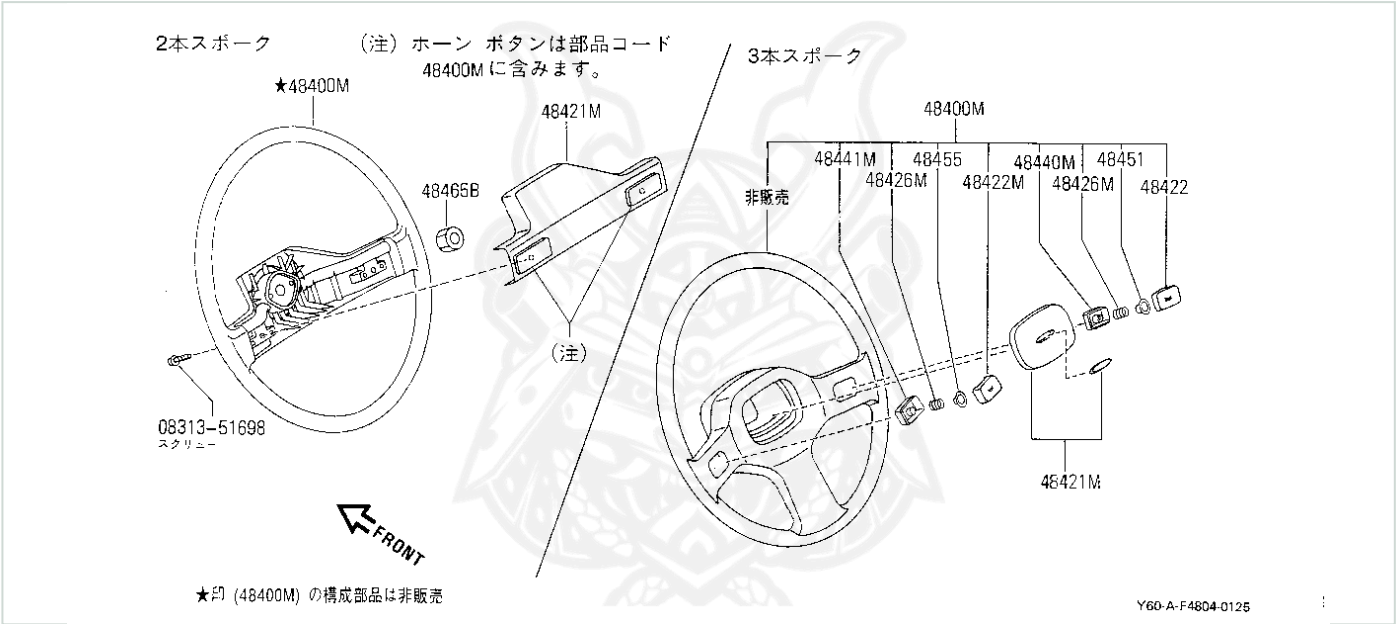

Part Number رقم القطعة	Diagram Ref مرجع المخطط	Part Name اسم القطعة	Details التفاصيل	Qty الكمية
48430-01J00	48400M	Steering Wheel Assembly, w/o Pad توجيه عجلة مجموعة	Applicability: V/LR.DX Specification: (C) Model Year: 1987-10-01 - 1991-10-01	1
48430-03J00	48400M	Steering Wheel Assembly, w/o Pad توجيه عجلة مجموعة	Applicability: HT +V.LR.AD +V.HR Specification: (C) Model Year: 1987-10-01 - 1989-09-01	1
48420-01J00	48421M	Pad, Horn	Applicability: V/LR.DX Specification: (C) Model Year: 1987-10-01 - 1991-10-01	1
48420-03J00	48421M	Pad, Horn	Applicability: HT +V.LR.AD +V.HR Specification: (C) Model Year: 1987-10-01 - 1989-09-01	1
48422-03J00	48422	Horn Button, Rh	Applicability: HT +V.LR.AD +V.HR Specification: (C) Model Year: 1987-10-01 - 1989-09-01	1
48424-03J00	48422M	Button, Horn LH	Applicability: HT +V.LR.AD +V.HR Specification: (C) Model Year: 1987-10-01 - 1989-09-01	1
48426-03J00	48426M	Spring, horn	Applicability: HT +V/HR +V/LR.AD Model Year: 1987-10-01 - 1989-09-01	2
48440-03J00	48440M	Insulator, horn spring A	Applicability: HT +V/HR +V/LR.AD Model Year: 1987-10-01 - 1989-09-01	1
48441-03J00	48441M	Insulator, horn spring B	Applicability: HT +V/HR +V/LR.AD Model Year: 1987-10-01 - 1989-09-01	1
48451-03J00	48451	Plate, Contact	Applicability: HT +V/HR +V/LR.AD Model Year: 1987-10-01 - 1989-09-01	1
48452-03J00	48455	Plate, Contact	Applicability: HT +V/HR +V/LR.AD Model Year: 1987-10-01 - 1989-09-01	1
01223-00061	48465B	Natsuto	Applicability: F Model Year: 1987-10-01 - 1991-10-01	1
08313-51698	0831351698	Bolt مسمار		

FUEL SYSTEM .012
نظام الوقود

VACUUM SYSTEM

https://www.nengun.com/oem/parts/323458/MiPwn5qAMfCfmoIwMfCfmpxDMTTwn5q9MDAx8J-QiW9sZC1qcC0xMjgtQzE0LTAxLTAwMQ/Vacuum+System/c264c485f08f1157

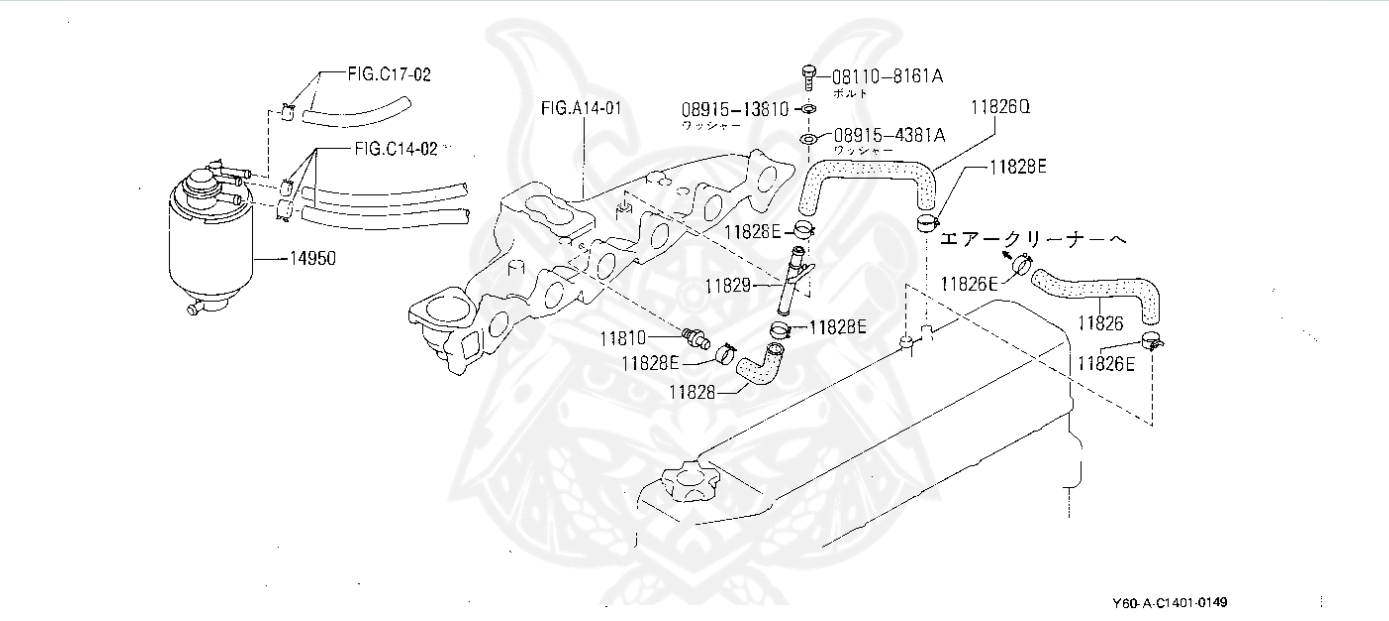

Part Number رقم القطعة	Diagram Ref مرجع المخطط	Part Name اسم القطعة	Details التفاصيل	Qty الكمية
11810-F0502	11810	Positive Crankcase Bench Race Valve صمام	Applicability: TB42S Model Year: 1987-10-01 - 1991-10-01	1
11826-03J05	11826	Crankcase breather vent tube	Applicability: F Model Year: 1987-10-01 -	1
16439-H7200	11826E	Clamp مشبك تثبيت	Applicability: F Model Year: 1987-10-01 -	2
11826-03J00	11826Q	Crankcase breather vent tube	Applicability: TB42S Model Year: 1987-10-01 -	1
11828-D8100	11828	Crankcase breather vent tube	Applicability: TB42S Model Year: 1987-10-01 -	1
16439-H7200	11828E	Clamp مشبك تثبيت	Applicability: TB42S Model Year: 1987-10-01 - 1991-10-01	4
11825-03J00	11829	Pipe extension blow-by ماسورة	Applicability: TB42S Model Year: 1987-10-01 -	1
14950-67S00	14950	Fuel vapor canister وقود	Applicability: TB42S Model Year: 1987-10-01 - 1991-10-01	1
08110-8161A	081108161A	Unknown		
08915-4381A	089154381A	WASHER-PLAIN		
08915-1381A	0891513810	WASHER وردة		
08915-13810	0891513810	Replaced by 08915-1381A		

FUEL SYSTEM .013
نظام الوقود

FUEL SYSTEM GASKETS, SEALS

وقود

https://www.nengun.com/oem/parts/323458/MiPwn5qAMfCfmoIwOfCfmpxDMTbwn5q9MDAx8J-QiW9sZC1qcC0xMjgtQzE2LTA5LTAwMQ/Fuel+System+Gaskets%2C+Seals/8ed4b35d4513dcba

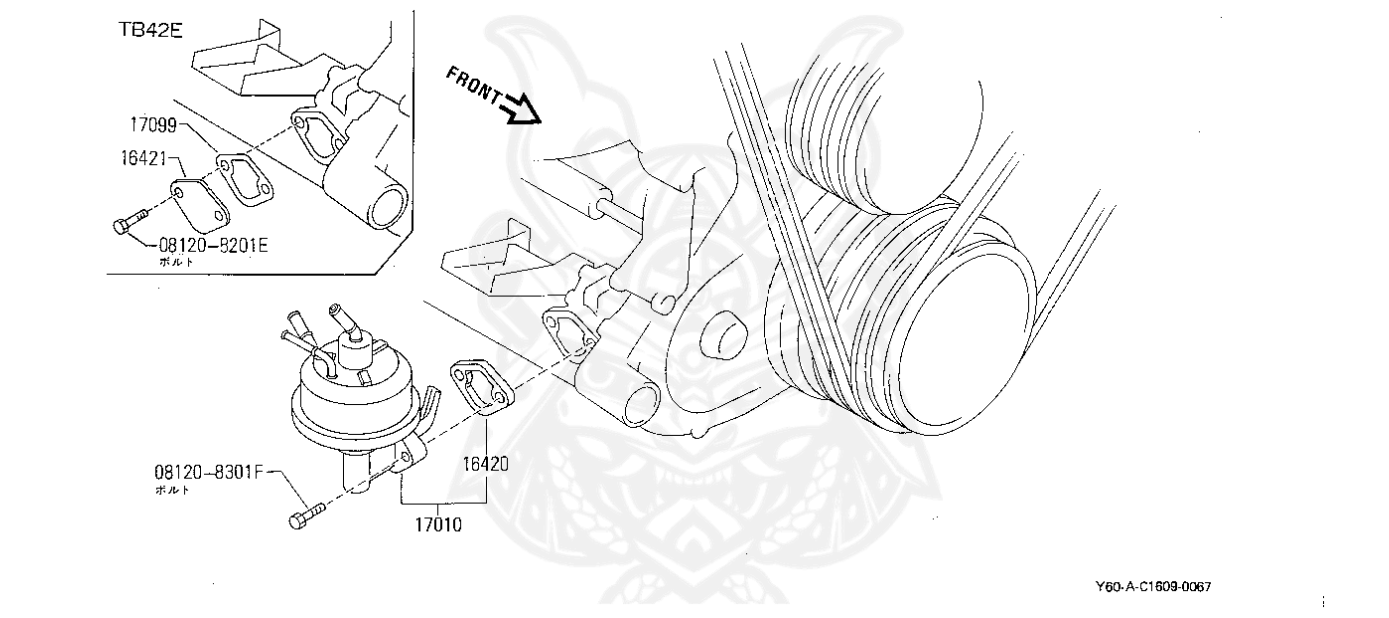

Part Number رقم القطعة	Diagram Ref مرجع المخطط	Part Name اسم القطعة	Details التفاصيل	Qty الكمية
16420-77A00	16420	Spacer, Fuel Pump وقود	Applicability: TB42S Model Year: 1987-10-01 - 1991-10-01	1
17010-03J25	17010	Fuel pump, thick semble وقود	Applicability: TB42S Model Year: 1987-10-01 - 1989-05-01	1
08120-8201E	081208201E	Bolt مسمار		
08120-8301F	081208301F	Bolt مسمار		

FUEL SYSTEM .014
نظام الوقود

FUEL NOZZLE

وقود

https://www.nengun.com/oem/parts/323458/MiPwn5qAMfCfmoIzMvCfmpxDMTbwn5q9MDAx8J-QiW9sZC1qcC0xMjgtQzE2LTMyLTAwMQ/Fuel+Nozzle/81b52f55deea0e0e

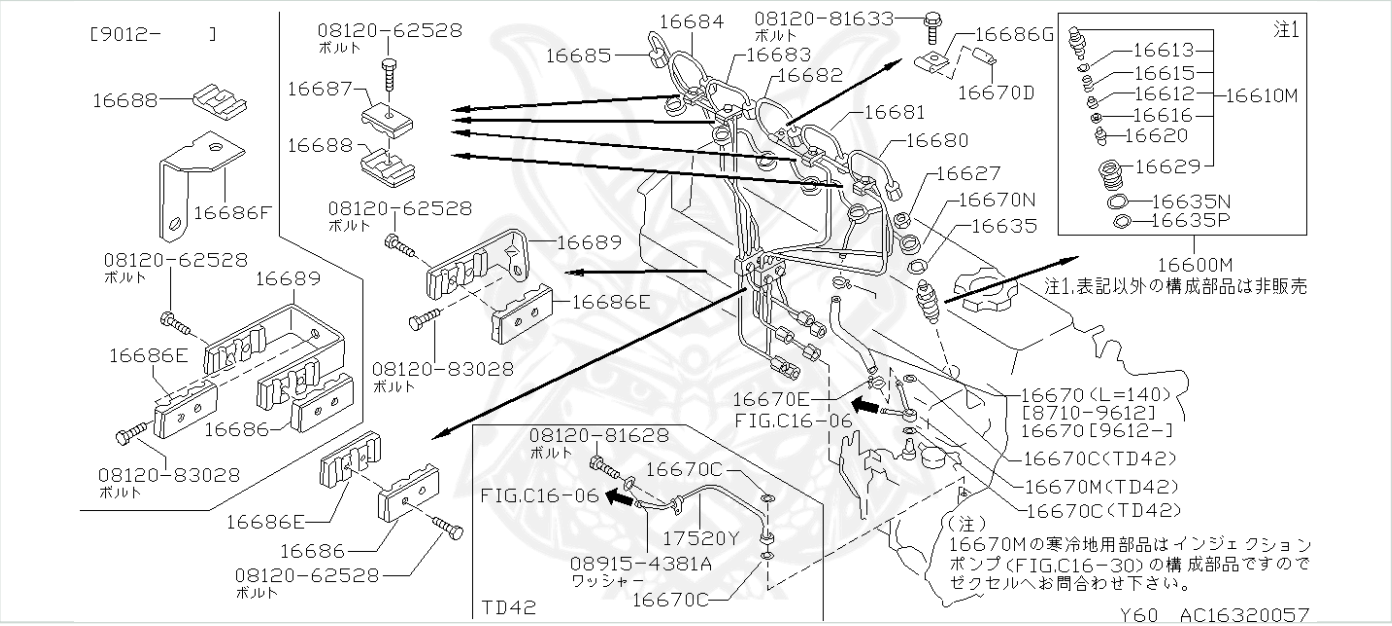

Part Number رقم القطعة	Diagram Ref مرجع المخطط	Part Name اسم القطعة	Details التفاصيل	Qty الكمية
16600-43G23	16600M	Nozzle & Holder Assembly مجموعة		
16600-43G22	16600M	Replaced by 16600-43G23		6
16610-43G01	16610M	Holder assembly, nozzle مجموعة	Applicability: TD42 Model Year: 1987-10-01 - 1993-08-01	6
16612-43G00	16612	Rod, Push	Applicability: TD42 Model Year: 1987-10-01 - 1993-08-01	6
16613-43G08	16613	WATSUYA, AJAYASTEING	Applicability: TD42 Specification: T=0.58 Model Year: 1987-10-01 - 1993-08-01	6
16613-43G09	16613	WATSUYA, AJAYASTEING	Applicability: TD42 Specification: T=0.8 Model Year: 1987-10-01 - 1993-08-01	6
16613-43G00	16613	Washer وردة	Applicability: TD42 Specification: T=0.1 Model Year: 1987-10-01 - 1993-08-01	6
16613-43G01	16613	Washer وردة	Applicability: TD42 Specification: T=0.2 Model Year: 1987-10-01 - 1993-08-01	6
16613-43G02	16613	Washer وردة	Applicability: TD42 Specification: T=0.3 Model Year: 1987-10-01 - 1993-08-01	6
16613-43G03	16613	WATSUYA, AJAYASTEING	Applicability: TD42 Specification: T=0.4 Model Year: 1987-10-01 - 1993-08-01	6
16613-43G04	16613	WATSUYA, AJAYASTEING	Applicability: TD42 Specification: T=0.5 Model Year: 1987-10-01 - 1993-08-01	6
16613-43G05	16613	WATSUYA, AJAYASTEING	Applicability: TD42 Specification: T=0.52 Model Year: 1987-10-01 - 1993-08-01	6
16613-43G06	16613	WATSUYA, AJAYASTEING	Applicability: TD42 Specification: T=0.54 Model Year: 1987-10-01 - 1993-08-01	6
16613-43G07	16613	WATSUYA, AJAYASTEING	Applicability: TD42 Specification: T=0.56 Model Year: 1987-10-01 - 1993-08-01	6
16615-43G00	16615	Spring, Nozzle	Applicability: TD42 Model Year: 1987-10-01 - 1993-08-01	6
16616-43G00	16616	Spacer	Applicability: TD42 Model Year: 1987-10-01 - 1993-08-01	6
16620-43G02	16620	Injector nozzle	Applicability: TD42 Specification: [B421] Model Year: 1987-10-01 - 1993-08-01	6

Part Number رقم القطعة	Diagram Ref مرجع المخطط	Part Name اسم القطعة	Details التفاصيل	Qty الكمية
16666-43G0A	16627	Nut, Spill صامولة		
16666-43G00	16627	Replaced by 16666-43G0A		6
16629-43G01	16629	Nut, Nozzle صامولة	Applicability: TD42 Model Year: 1987-10-01 - 1993-08-01	6
16627-43G00	16635	Gasket, Nozzle وجه	Applicability: TD42 Model Year: 1987-10-01 - 1993-08-01	6
16625-43G00	16635N	Gasket, Nozzle وجه	Applicability: TD42 Model Year: 1987-10-01 - 1993-08-01	6
16626-43G00	16635P	Gasket, Nozzle وجه	Applicability: TD42 Model Year: 1987-10-01 - 1993-08-01	6
A8742-20010	16670	Fuel hose وقود خرطوم	Applicability: TD42 Specification: L=2200 (Cut and run) Model Year: 1987-10-01 - 1993-08-01	0
01351-10124	16670C	Washer وردة	Applicability: TD42 Model Year: 1987-10-01 - 1990-04-01	4
01555-00411	16670E	Clip مشبك	Applicability: TD42 Model Year: 1987-10-01 - 1989-09-01	2
16678-06J01	16670M	Fuel tube وقود	Applicability: TD42 Model Year: 1987-10-01 -	1
A6670-06J0A	16670N	Fuel Spill Tube Assembly وقود مجموعة		
16670-06J00	16670N	Replaced by A6670-06J0A		1
16680-06J02	16680	Tube Assembly, Injection No. 1 مجموعة	Applicability: TD42 Model Year: 1987-10-01 - 1993-08-01	1
16681-06J02	16681	Tube Assembly, Injection No. 2 مجموعة	Applicability: TD42 Model Year: 1987-10-01 - 1993-08-01	1
16682-06J02	16682	Tube Assembly, Injection No. 3 مجموعة	Applicability: TD42 Model Year: 1987-10-01 - 1993-08-01	1
16683-06J02	16683	Tube assembly, injection No. 4 مجموعة	Applicability: TD42 Model Year: 1987-10-01 - 1993-08-01	1
16684-06J02	16684	Fuel tube وقود	Applicability: TD42 Model Year: 1987-10-01 - 1993-08-01	1
16685-06J02	16685	Tube Assembly, Injection No. 6 مجموعة	Applicability: TD42 Model Year: 1987-10-01 - 1993-08-01	1
16696-06J00	16686	Supports, Indication Tube	Applicability: TD42 Model Year: 1987-10-01 - 1993-08-01	1
16697-06J00	16686E	Support Injection Tube	Applicability: TD42 Model Year: 1987-10-01 - 1993-08-01	2
16698-43G0B	16687	Support, Induction Chain		
16698-43G01	16687	Replaced by 16698-43G0B		4
16699-43G0A	16688	Support, Induction Chain		
16699-43G00	16688	Replaced by 16699-43G0A		4
16696-06J01	16689	Support Injection Tube	Applicability: TD42 Model Year: 1987-10-01 - 1991-02-01	1
17520-06J00	17520Y	Fuel tube وقود	Applicability: TD42 Model Year: 1987-10-01 - 1991-10-01	1
08915-4381A	089154381A	WASHER-PLAIN		

Part Number رقم القطعة	Diagram Ref مرجع المخطط	Part Name اسم القطعة	Details التفاصيل	Qty الكمية
08120-62528	0812062528	BOLT مسمار		
08120-81628	0812081628	Unknown		
08120-81633	0812081633	Unknown		
08120-83028	0812083028	Unknown		

IGNITION SYSTEM .015
نظام الإشعال

GLOW PLUG

https://www.nengun.com/oem/parts/323458/MiPwn5qAMfCfmoIwMfCfmpxHMjLwn5q9MDAy8J-QiW9sZC1qcC0xMjgtRzIyLTAxLTAwMg/Glow+Plug/718ad7355b56f50c

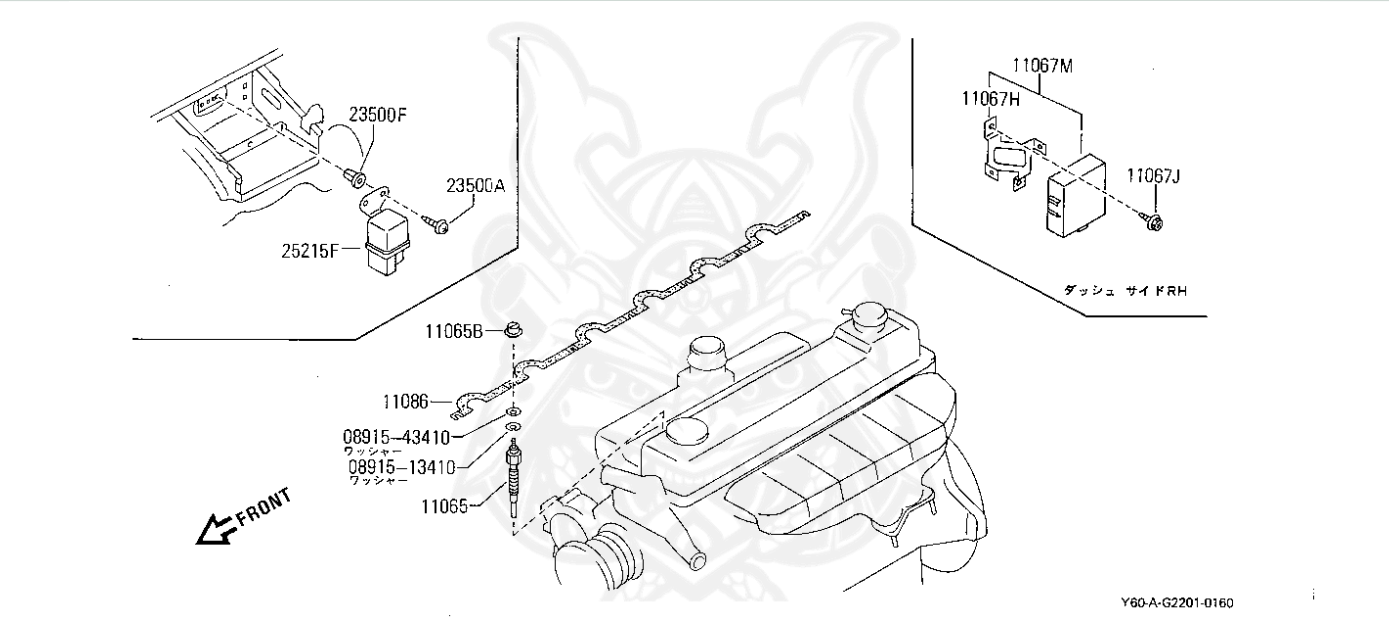

Part Number رقم القطعة	Diagram Ref مرجع المخطط	Part Name اسم القطعة	Details التفاصيل	Qty الكمية
11065-10T01	11065	Glow Plug	Applicability: TD42 Specification: [B512] Model Year: 1987-10-01 - 1991-10-01	6
11066-V7204	11065B	Nut صامولة	Applicability: TD42 Model Year: 1987-10-01 - 1993-02-01	6
28238-06J00	11067H	Bracket, Glow Plug, Timer حامل	Applicability: TD42 Model Year: 1987-10-01 - 1993-08-01	1
01466-00071	11067J	Screw برغي	Applicability: TD42 Model Year: 1987-10-01 - 1993-08-01	2
11069-06J15	11067M	Timer Assembly, Glow Plug مجموعة	Applicability: TD42 Specification: 24V QGS-1 Model Year: 1987-10-01 - 1989-10-01	1
11086-06J00	11086	Cable Assembly مجموعة	Applicability: TD42 Model Year: 1987-10-01 - 1993-08-01	1
01461-00061	23500A	Screw برغي	Applicability: TD42 Model Year: 1987-10-01 - 1993-08-01	4
01281-00171	23500F	Fastening bolt مسمار	Applicability: TB42S Model Year: 1987-10-01 - 1993-08-01	2
01281-00821	23500F	Grommet, Screw برغي		
62035-Q0101	23500F	Replaced by 01281-00821		4
25230-10T00	25215F	Relay Assembly, Glow Plug مجموعة	Applicability: TD42 Specification: 24V Model Year: 1987-10-01 - 1989-10-01	2
08915-13410	0891513410	Unknown		
08915-43410	0891543410	Unknown		

IGNITION SYSTEM .016
نظام الإشعال

IGNITION LOCK

https://www.nengun.com/oem/parts/323458/MiPwn5qAMfCfmoIwMvCfmpxIOTnwn5q9MDAx8J-QiW9sZC1qcC0xMjgtSDk5LTAyLTAwMQ/Ignition+Lock/d45c6bc6ae6d6dd0

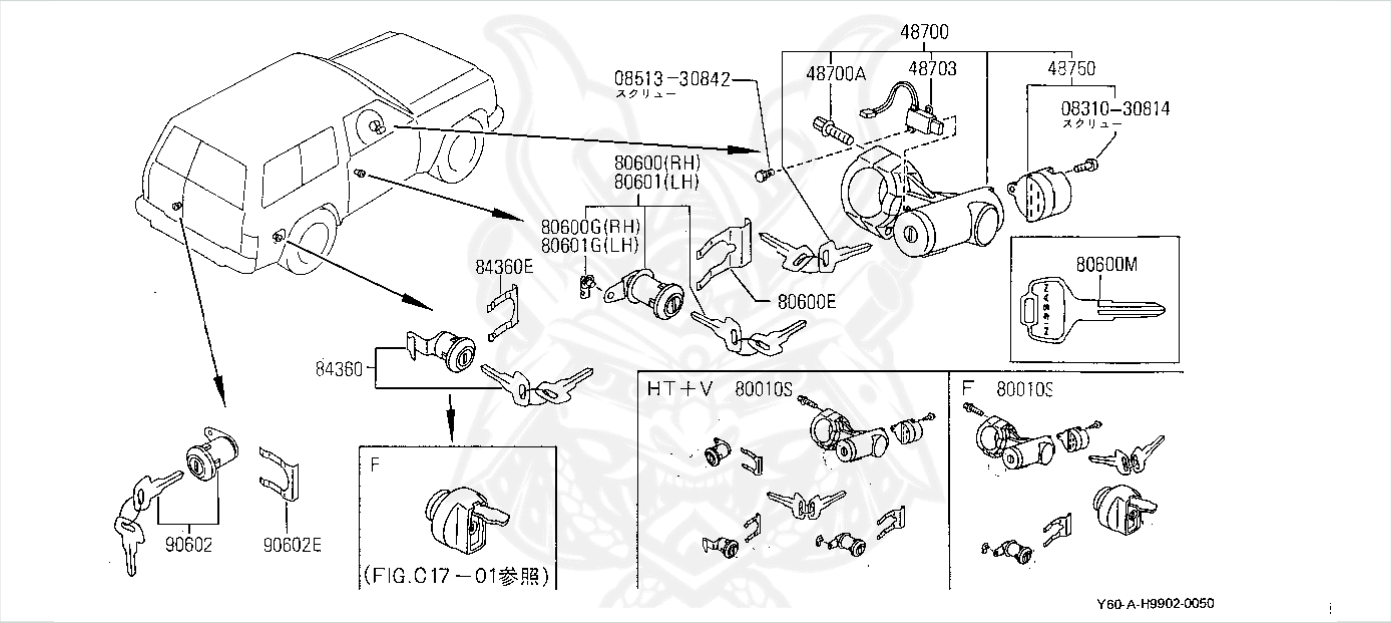

Part Number رقم القطعة	Diagram Ref مرجع المخطط	Part Name اسم القطعة	Details التفاصيل	Qty الكمية
48700-05J85	48700	Ignition lock assembly مجموعة	Applicability: HT.AT +V.AT Model Year: 1988-09-01 - 1991-10-01	1
D8700-75L00	48700	Ignition Lock Assembly مجموعة		
48700-D4025	48700	Replaced by D8700-75L00		1
48703-06F0A	48700A	Screw, Steering Lock برغي توجيه		
48703-06F00	48700A	Replaced by 48703-06F0A		2
48720-05J60	48703	Solenoid valve assembly, steering lock صمام مجموعة توجيه	Applicability: (HT+V).AT Model Year: 1988-09-01 - 1993-08-01	1
48750-AD000	48750	Switch Assembly, Ignition مجموعة		
48750-D4000	48750	Replaced by 48750-AD000		1
99810-10J25	80010S	Lock cylinders with key (set)	Applicability: F Model Year: 1987-10-01 - 1995-08-01	2
K9810-06J25	80010S	Lock cylinders with key (set)		
99810-05J25	80010S	Replaced by K9810-06J25		1
99810-05J86	80010S	Set, Cylinder Lock	Applicability: HT.AT +V.AT Model Year: 1988-09-01 - 1991-10-01	1
80600-C7425	80600	Lock cylinder	Applicability: F Model Year: 1987-10-01 -	2
80590-01E01	80600E	Clip مشبك	Applicability: F Model Year: 1987-10-01 -	2
80532-Q0100	80600G	Clip مشبك	Applicability: HT +V Model Year: 1987-10-01 - 1989-09-01	1
KEY00-00066	80600M	Key, Blank Master	Applicability: F Model Year: 1987-10-01 -	1
80601-C7425	80601	Lock cylinder	Applicability: F Model Year: 1987-10-01 -	2
80533-Q010A	80601G	Rod Holder		
80533-Q0100	80601G	Replaced by 80533-Q010A		1
78840-V6025	84360	Cylinder Kit, Fuel Filler Lock وقود	Applicability: HT +V Model Year: 1987-10-01 - 1991-02-01	1
80590-01L00	84360E	Clip, Retaining Cylinder-lock مشبك	Applicability: HT +V Model Year: 1987-10-01 - 1991-02-01	1

Part Number رقم القطعة	Diagram Ref مرجع المخطط	Part Name اسم القطعة	Details التفاصيل	Qty الكمية
80600-01B25	90602	Door lock	Applicability: HT +V Model Year: 1987-10-01 - 1991-02-01	1
80590-01L00	90602E	Clip, Retaining Cylinder-lock مشبك	Applicability: HT +V Model Year: 1987-10-01 - 1991-02-01	1
08310-30814	0831030814	Bolt مسمار		
08513-30842	0851330842	Screw برغي		

IGNITION SYSTEM .017
نظام الإشعال

IGNITION PLUG

https://www.nengun.com/oem/parts/323458/MiPwn5qAMfCfmoIwMfCfmpxHMjLwn5q9MDAx8J-QiW9sZC1qcC0xMjgtRzIyLTAxLTAwMQ/Ignition+Plug/ee4f9965fb1ee035

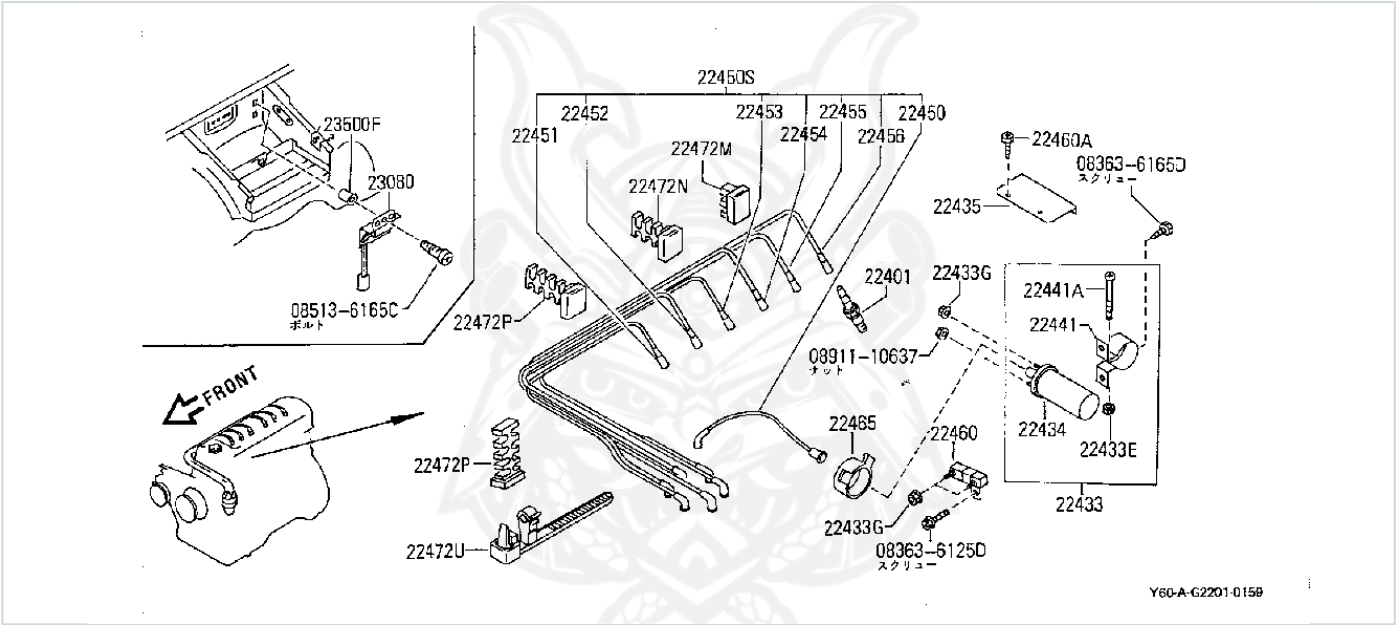

Part Number رقم القطعة	Diagram Ref مرجع المخطط	Part Name اسم القطعة	Details التفاصيل	Qty الكمية
22401-W8916	22401	Spark plug	Applicability: TB42S Specification: BP6ES[B512] Model Year: 1987-10-01 - 1988-09-01	6
22401-V1414	22401	Spark plug	Applicability: TB42S Specification: BPR4ES[B512] Model Year: 1988-09-01 - 1995-08-01	6
22401-V1415	22401	Spark plug	Applicability: TB42S Specification: BPR5ES HIYOJUUN [B512] Model Year: 1988-09-01 - 1995-08-01	6
22401-V1416	22401	Spark plug	Applicability: TB42S Specification: BPR6ES[B512] Model Year: 1988-09-01 - 1995-08-01	6
22401-W8914	22401	Spark plug	Applicability: TB42S Specification: BP4ES[B512] Model Year: 1987-10-01 - 1988-09-01	6
22401-W8915	22401	Spark plug	Applicability: TB42S Specification: BP5ES HIYOJUUN [B512] Model Year: 1987-10-01 - 1988-09-01	6
22401-W8917	22401	Spark plug	Applicability: TB42S Specification: BP7ES[B512] Model Year: 1987-10-01 - 1988-09-01	6
22433-50A10	22433	Ignition coil	Applicability: TB42S Specification: Hanshin Model Year: 1987-10-01 - 1993-08-01	1
22464-N7110	22433E	Nut صامولة	Applicability: TB42S Specification: Hanshin Model Year: 1987-10-01 - 1993-08-01	2
01221-00111	22433G	Nut صامولة	Applicability: TB42S Model Year: 1987-10-01 - 1993-08-01	3
22462-50A10	22434	Ignition Coil	Applicability: TB42S Specification: Hanshin Model Year: 1987-10-01 - 1993-08-01	1
22435-09J00	22435	Bracket, ignition coil حامل	Applicability: TB42S Model Year: 1987-10-01 - 1993-08-01	1
22441-N8710	22441	Band	Applicability: TB42S Specification: Hanshin Model Year: 1987-10-01 - 1993-08-01	1
22467-N7110	22441A	Fastening bolt مسمار	Applicability: TB42S Specification: Hanshin Model Year: 1987-10-01 - 1993-08-01	2
22450-01N10	22450	Ignition cable	Applicability: TB42S Specification: Sumitomo Model Year: 1988-11-01 - 1994-10-01	1
22450-21E00	22450	Ignition cable	Applicability: TB42S Specification: Yazaki Model Year: 1987-10-01 - 1988-11-01	1
22450-21E10	22450	Ignition cable	Applicability: TB42S Specification: Sumitomo Model Year: 1987-10-01 - 1988-11-01	1

Part Number رقم القطعة	Diagram Ref مرجع المخطط	Part Name اسم القطعة	Details التفاصيل	Qty الكمية
22450-09J25	22450S	Ignition cable kit	Applicability: TB42S Model Year: 1987-10-01 - 1988-11-01	1
22450-09J26	22450S	Ignition cable kit	Applicability: TB42S Model Year: 1988-11-01 - 1989-09-01	1
22451-03J00	22451	Ignition cable	Applicability: TB42S Specification: Yazaki, either one, please Model Year: 1987-10-01 - 1991-10-01	1
22451-03J10	22451	Ignition cable	Applicability: TB42S Specification: Sumitomo Dochirademo Shiyouka Model Year: 1987-10-01 - 1995-08-01	1
22452-03J00	22452	Ignition cable	Applicability: TB42S Specification: Yazaki, either one, please Model Year: 1987-10-01 - 1991-10-01	1
22452-03J10	22452	Ignition cable	Applicability: TB42S Specification: Sumitomo Dochirademo Shiyouka Model Year: 1987-10-01 - 1991-10-01	1
22453-03J00	22453	Ignition cable	Applicability: TB42S Specification: Yazaki, either one, please Model Year: 1987-10-01 - 1991-10-01	1
22453-03J10	22453	Ignition cable	Applicability: TB42S Specification: Sumitomo Dochirademo Shiyouka Model Year: 1987-10-01 - 1991-10-01	1
22454-03J00	22454	Ignition cable	Applicability: TB42S Specification: Yazaki, either one, please Model Year: 1987-10-01 - 1991-10-01	1
22454-03J10	22454	Ignition cable	Applicability: TB42S Specification: Sumitomo Dochirademo Shiyouka Model Year: 1987-10-01 - 1995-08-01	1
22455-03J00	22455	Cable Assembly, High Tension No. 5 مجموعة	Applicability: TB42S Specification: Yazaki, either one, please Model Year: 1987-10-01 - 1991-10-01	1
22455-03J10	22455	Cable Assembly, High Tension No. 5 مجموعة	Applicability: TB42S Specification: Sumitomo Dochirademo Shiyouka Model Year: 1987-10-01 - 1995-08-01	1
22456-03J00	22456	Cable Assembly, High Tension No. 6 مجموعة	Applicability: TB42S Specification: Yazaki, either one, please Model Year: 1987-10-01 - 1991-10-01	1
22456-03J10	22456	Cable Assembly, High Tension No. 6 مجموعة	Applicability: TB42S Specification: Sumitomo Dochirademo Shiyouka Model Year: 1987-10-01 - 1993-08-01	1
22460-01A10	22460	Register, Ignition Coil	Applicability: TB42S Model Year: 1987-10-01 - 1993-08-01	1
01466-00071	22460A	Screw برغي	Applicability: TB42S Specification: M6 Model Year: 1987-10-01 - 1993-08-01	2
22465-W1000	22465	Protector, Ignition Coil	Applicability: TB42S Model Year: 1987-10-01 - 1993-08-01	1
22472-01N01	22472M	Clip مشبك	Applicability: TB42S Model Year: 1987-10-01 - 1991-10-01	1
22472-01N00	22472N	Clamp مشبك تثبيت	Applicability: TB42S Model Year: 1987-10-01 - 1991-10-01	1
22472-03J00	22472P	Clip مشبك	Applicability: TB42S Model Year: 1987-10-01 - 1991-10-01	2
22472-03J10	22472U	Clip مشبك	Applicability: TB42S Model Year: 1987-10-01 - 1989-09-01	1
23080-90W00	23080	Register, pilot lamp	Applicability: TB42S Model Year: 1987-10-01 - 1993-08-01	1
01281-00171	23500F	Fastening bolt مسمار	Applicability: TB42S Model Year: 1987-10-01 - 1993-08-01	2
01281-00821	23500F	Grommet, Screw برغي		
62035-Q0101	23500F	Replaced by 01281-00821		4
08363-6125D	083636125D	Protector, Citsping Front Lh		
08363-6165D	083636165D	Unknown		

Part Number رقم القطعة	Diagram Ref مرجع المخطط	Part Name اسم القطعة	Details التفاصيل	Qty الكمية
08513-6165C	085136165C	Unknown		
08911-10637	0891110637	Nut صامولة		

IGNITION SYSTEM .018
نظام الإشعال

IGNITION DISTRIBUTOR

https://www.nengun.com/oem/parts/323458/MiPwn5qAMfCfmoIwMvCfmpxHMjLwn5q9MDAx8J-QiW9sZC1qcC0xMjgtRzIyLTAyLTAwMQ/Ignition+Distributor/1df553456f50f43f

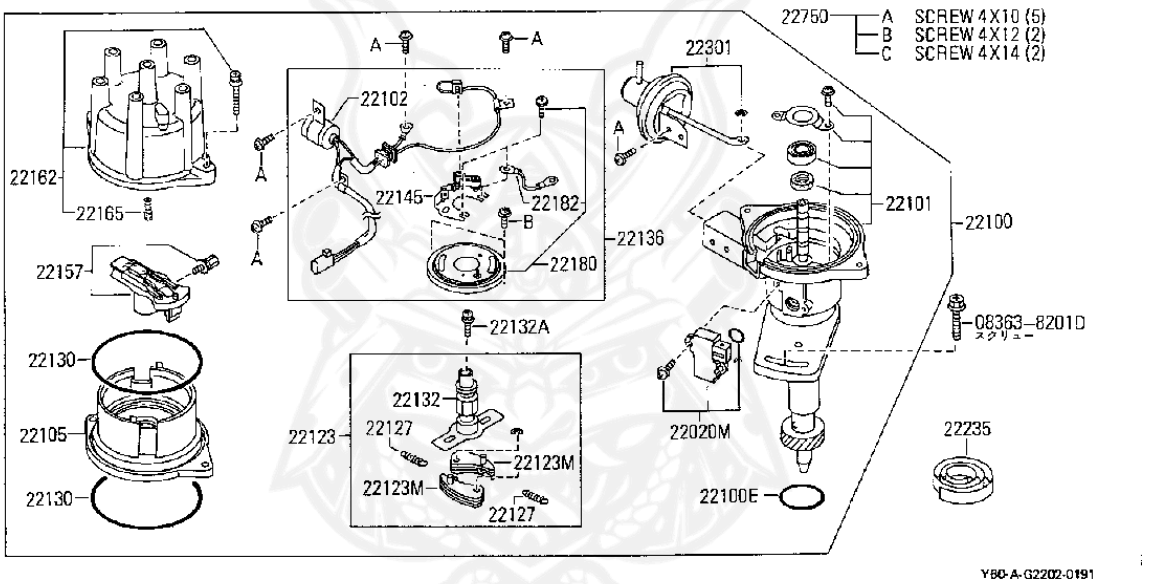

Part Number رقم القطعة	Diagram Ref مرجع المخطط	Part Name اسم القطعة	Details التفاصيل	Qty الكمية
22020-09J10	22020M	Transistor, Power Ignition Unit وحدة	Applicability: TB42S Specification: Mitsubishi Model Year: 1987-10-01 - 1995-08-01	1
22100-09J10	22100	Ignition distributor	Applicability: TB42S Specification: Mitsubishi T0T00571 Model Year: 1987-10-01 - 1993-08-01	1
22131-03J10	22100E	Seal Ring جلدة	Applicability: TB42S Specification: Mitsubishi Model Year: 1987-10-01 - 1991-10-01	1
22101-09J10	22101	Housing Assembly, Distribution Publisher مجموعة	Applicability: TB42S Specification: Mitsubishi Model Year: 1987-10-01 - 1993-08-01	1
22102-03J10	22102	Condenser Assembly مجموعة	Applicability: TB42S Specification: Mitsubishi Model Year: 1987-10-01 - 1995-08-01	1
22125-03J10	22105	Cover, distributor غطاء	Applicability: TB42S Specification: Mitsubishi Model Year: 1987-10-01 - 1993-08-01	1
22109-09J10	22123	Weight, Governor	Applicability: TB42S Specification: Mitsubishi Model Year: 1987-10-01 - 1993-08-01	1
22109-03J11	22123M	Weight, Governor	Applicability: TB42S Specification: Mitsubishi Model Year: 1987-10-01 - 1988-10-01	2
22109-03J12	22123M	Weight, Governor	Applicability: TB42S Specification: Mitsubishi Model Year: 1988-10-01 - 1993-08-01	2
22110-09J10	22127	Spring, Governor	Applicability: TB42S Specification: Mitsubishi Model Year: 1987-10-01 - 1988-10-01	2
22110-09J11	22127	Spring, Governor	Applicability: TB42S Specification: Mitsubishi Model Year: 1988-10-01 - 1993-08-01	2
22185-03J10	22130	Seal Ring جلدة	Applicability: TB42S Specification: Mitsubishi Model Year: 1987-10-01 - 1995-08-01	2
22132-09J11	22132	Cam Set	Applicability: TB42S Specification: Mitsubishi Model Year: 1988-10-01 - 1993-08-01	1
22132-09J10	22132	Cam Set	Applicability: TB42S Specification: Mitsubishi Model Year: 1987-10-01 - 1988-10-01	1
22104-14615	22132A	Fastening bolt مسمار	Applicability: TB42S Specification: Mitsubishi Model Year: 1987-10-01 - 1995-08-01	1
22136-03J10	22136	Plate assembly, breaker مجموعة	Applicability: TB42S Specification: Mitsubishi Model Year: 1987-10-01 - 1995-08-01	1
22145-89905	22145	Ignition distributor contact breaker point	Applicability: TB42S Specification: Mitsubishi Model Year: 1987-10-01 - 1995-08-01	1

Part Number رقم القطعة	Diagram Ref مرجع المخطط	Part Name اسم القطعة	Details التفاصيل	Qty الكمية
22157-03J10	22157	Rotor, head	Applicability: TB42S Specification: Mitsubishi Model Year: 1987-10-01 - 1993-08-01	1
22162-03J11	22162	Ignition distributor cap غطاء	Applicability: TB42S Specification: Mitsubishi Model Year: 1987-10-01 - 1991-10-01	1
22165-M5610	22165	CARBON POINT ASSEMBLY مجموعة	Applicability: TB42S Specification: Mitsubishi Model Year: 1987-10-01 - 1991-10-01	1
22136-03J11	22180	Plate, fixing	Applicability: TB42S Specification: Mitsubishi Model Year: 1987-10-01 - 1995-08-01	1
22182-01M11	22182	Wire assembly, earth مجموعة	Applicability: TB42S Specification: Mitsubishi Model Year: 1987-10-01 - 1995-08-01	1
22235-U7400	22235	Tape, Seal Distributor جلدة		
B2235-U7410	22235	Replaced by 22235-U7400		1
22301-09J10	22301	Ignition distributor vacuum regulator	Applicability: TB42S Specification: Mitsubishi Model Year: 1987-10-01 - 1993-08-01	1
22750-M0110	22750	Screw kit برغي	Applicability: TB42S Specification: Mitsubishi Model Year: 1987-10-01 - 1991-10-01	1
08363-8201D	083638201D	Unknown		

BRAKE SYSTEM .019
نظام الفرامل

PARKING BRAKE SYSTEM

فرامل

https://www.nengun.com/oem/parts/323458/MiPwn5qAMfCfmoIwMfCfmpxFMzbwn5q9MDAx8J-QiW9sZC1qcC0xMjgtRTM2LTAxLTAwMQ/Parking+Brake+System/5a65ede2cab6d3ab

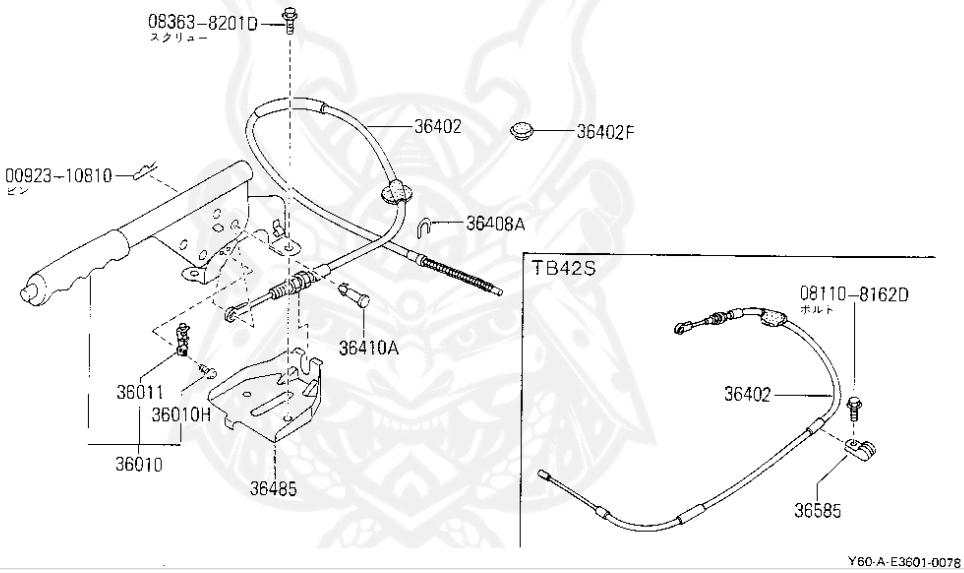

Part Number رقم القطعة	Diagram Ref مرجع المخطط	Part Name اسم القطعة	Details التفاصيل	Qty الكمية
36010-01J00	36010	Device Assembly, Parking Brake Control مجموعة فرامل تحكم	Applicability: TD42 Model Year: 1987-10-01 - 1991-10-01	1
36011-41G00	36011	Switch assembly, parking brake lamp مجموعة فرامل	Applicability: TB42S +TD42 Model Year: 1987-10-01 - 1991-10-01	1
36402-01J00	36402	Hand brake cable فرامل	Applicability: TD42 Model Year: 1987-10-01 - 1991-10-01	1
36402-09J00	36402	Hand brake cable فرامل	Applicability: TB42S Model Year: 1987-10-01 - 1990-03-01	1
01658-00441	36402F	GROMMET	Applicability: TD42 Model Year: 1987-10-01 - 1991-10-01	1
36138-C6000	36408A	Ring, Snap	Applicability: TD42 Model Year: 1987-10-01 - 1991-10-01	1
36403-C6000	36410A	Pink, Crevis	Applicability: TB42S Model Year: 1987-10-01 - 1991-10-01	1
36410-01J00	36485	Bracket assembly, parking brake wire حامل مجموعة فرامل	Applicability: TB42S Model Year: 1987-10-01 - 1991-10-01	1
01551-15104	36585	Cable holder	Applicability: TB42S Model Year: 1987-10-01 - 1993-08-01	1
08110-8162D	081108162D	Unknown		
08363-8201D	083638201D	Unknown		
00923-10810	0092310810	PIN		

BRAKE SYSTEM .020
نظام الفرامل

BRAKE MASTER CYLINDER

فرامل

https://www.nengun.com/oem/parts/323458/MiPwn5qAMfCfmoIwNPCfmpxFNDHwn5q9MDAx8J-QiW9sZC1qcC0xMjgtRTQxLTA0LTAwMQ/Brake+Master+Cylinder/d939a09f4862eae5

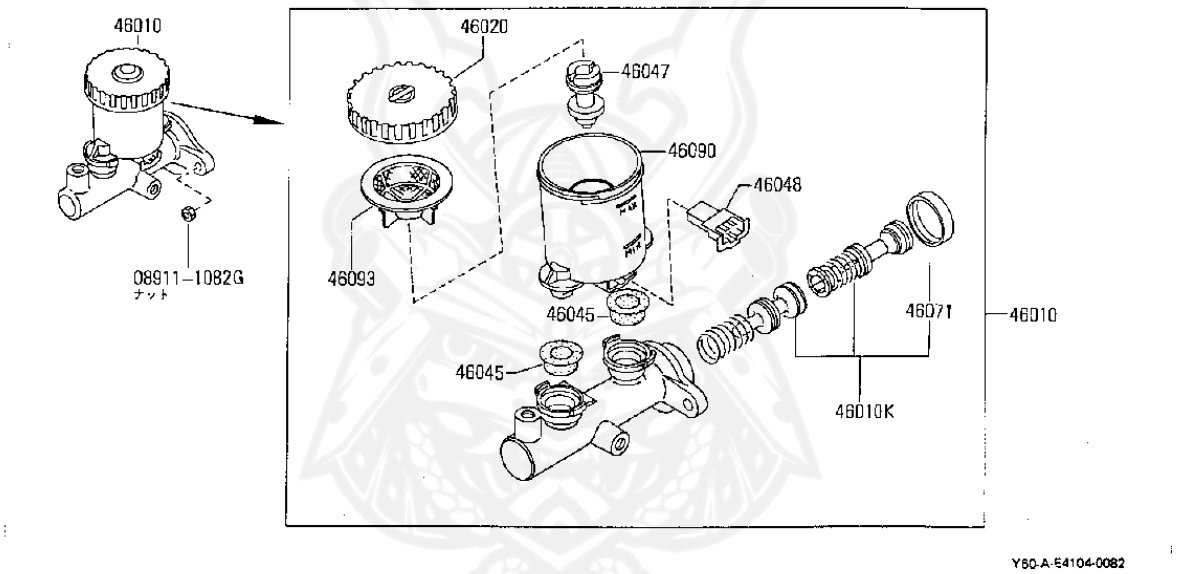

Part Number رقم القطعة	Diagram Ref مرجع المخطط	Part Name اسم القطعة	Details التفاصيل	Qty الكمية
46010-01G00	46010	Brake Master Cylinder Assembly فرامل مجموعة	Applicability: TB42S Specification: Nabuco Tokiko 1 Model Year: 1987-10-01 - 1991-10-01	1
46010-02J00	46010	CYLINDER ASSEMBLY, BRAKE MASTER مجموعة فرامل	Applicability: TD42 Specification: Tokiko 17/16 Model Year: 1987-10-01 - 1991-10-01	1
46011-02J26	46010K	Brake master cylinder repair kit فرامل	Applicability: TD42 Specification: Tokiko 17/16 Model Year: 1987-10-01 - 1991-10-01	1
46011-44L25	46010K	Brake master cylinder repair kit فرامل	Applicability: TB42S Specification: Nabco 1 Model Year: 1987-10-01 - 1991-10-01	1
46011-V6726	46010K	Brake master cylinder repair kit فرامل	Applicability: TB42S Specification: Tokiko 1 Model Year: 1987-10-01 - 1991-10-01	1
46020-25G10	46020	Cap Assembly, Brake Oil Reservoir Tank غطاء مجموعة فرامل	Applicability: TD42 Specification: Tokiko Model Year: 1987-10-01 - 1991-10-01	1
46020-J1800	46020	Cap Assembly, Brake Oil Reservoir Tank غطاء مجموعة فرامل	Applicability: TB42S Specification: Nabuko Genbutsu Kankunin Model Year: 1987-10-01 - 1991-10-01	1
46045-W1010	46045	Seal, reservoir tank جلدة	Applicability: TD42 Specification: Tokiko Model Year: 1987-10-01 - 1991-10-01	2
46045-W1300	46045	Seal, reservoir tank جلدة	Applicability: TB42S Specification: Nabuko Genbutsu Kankunin Model Year: 1987-10-01 - 1991-10-01	2
46047-V5010	46047	Float, Reservoir Tank	Applicability: TD42 Specification: Tokiko Model Year: 1987-10-01 - 1991-10-01	1
46047-01F00	46047	Float, reservoir, tank	Applicability: TB42S Specification: Nabuko Genbutsu Kankunin Model Year: 1987-10-01 - 1991-10-01	1
46048-01F00	46048	Indicator Assembly, Level Brake Oil مجموعة فرامل	Applicability: TB42S Specification: Nabuko Genbutsu Kankunin Model Year: 1987-10-01 - 1991-10-01	1
46048-V5010	46048	Indicator Assembly, Level Brake Oil مجموعة فرامل	Applicability: TD42 Specification: Tokiko Model Year: 1987-10-01 - 1991-10-01	1
46082-01A10	46071	Ring, Snap	Applicability: TD42 Specification: Tokiko Model Year: 1987-10-01 - 1991-10-01	1
46082-01A11	46071	Ring, Snap	Applicability: TB42S Specification: Confirmation of Tokiko Genbutsu Model Year: 1987-10-01 - 1991-10-01	1

Part Number رقم القطعة	Diagram Ref مرجع المخطط	Part Name اسم القطعة	Details التفاصيل	Qty الكمية
46082-R9000	46071	Retainer, Piston	Applicability: TB42S Specification: Nabuko Genbutsu Kankunin Model Year: 1987-10-01 - 1991-10-01	1
46091-01F00	46090	Brake fluid reservoir فرامل	Applicability: TB42S Specification: Nabuko Genbutsu Kankunin Model Year: 1987-10-01 - 1991-10-01	1
46091-V5010	46090	Brake fluid reservoir فرامل	Applicability: TD42 Specification: Tokiko Model Year: 1987-10-01 - 1991-10-01	1
46093-V5010	46093	Brake oil strainer فرامل	Applicability: TD42 Specification: Tokiko Model Year: 1987-10-01 - 1991-10-01	1
46093-01F00	46093	Brake oil strainer فرامل	Applicability: TB42S Specification: Nabuko Genbutsu Kankunin Model Year: 1987-10-01 - 1991-10-01	1
08911-1082G	089111082G	NUT صامولة		

BRAKE SYSTEM .021
نظام الفرامل

BRAKE SLAVE CYLINDER

فرامل

https://www.nengun.com/oem/parts/323458/MiPwn5qAMfCfmoIwMvCfmpxFNDHwn5q9MDAx8J-QiW9sZC1qcC0xMjgtRTQxLTAyLTAwMQ/Brake+Slave+Cylinder/22b666c239994200

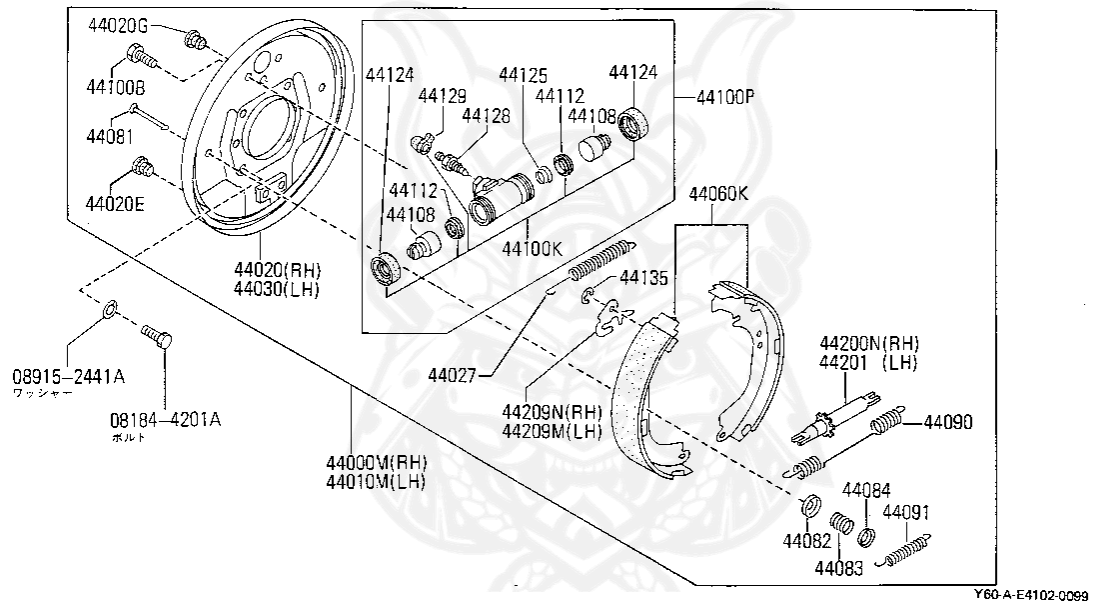

Part Number رقم القطعة	Diagram Ref مرجع المخطط	Part Name اسم القطعة	Details التفاصيل	Qty الكمية
44000-01J10	44000M	Brake mechanism assembly, rear فرامل مجموعة	Applicability: TB42S Model Year: 1987-10-01 - 1993-08-01	1
44000-01J10	44010M	Brake mechanism assembly, rear فرامل مجموعة	Applicability: TB42S Model Year: 1987-10-01 - 1993-08-01	1
44020-01J10	44020	Brake mechanism cover فرامل غطاء	Applicability: TB42S Model Year: 1987-10-01 - 1993-08-01	1
41098-08G10	44020E	Plug	Applicability: TB42S Model Year: 1987-10-01 - 1993-08-01	4
41098-01J10	44020G	Plug	Applicability: TB42S Model Year: 1987-10-01 - 1993-08-01	2
44214-01J10	44027	Spring, Asian Sting Rear Brake فرامل	Applicability: TB42S Model Year: 1987-10-01 - 1993-08-01	2
44020-01J10	44030	Brake mechanism cover فرامل غطاء	Applicability: TB42S Model Year: 1987-10-01 - 1993-08-01	1
44060-01J25	44060K	Drum brake shoes فرامل	Applicability: TB42S Specification: [B102] Model Year: 1987-10-01 - 1993-08-01	1
41081-J5110	44081	Drum brake shoe pin فرامل	Applicability: TB42S Model Year: 1987-10-01 - 1993-08-01	4
44082-U9200	44082	Sheet, Spring	Applicability: TB42S Model Year: 1987-10-01 - 1993-08-01	4
41083-T3260	44083	Clip مشبك	Applicability: TB42S Model Year: 1987-10-01 - 1993-08-01	4
44084-U920A	44084	Retainer, Spring Anti-shy Rattle		
44084-U9200	44084	Replaced by 44084-U920A		4
44090-01J10	44090	Drum brake shoe mounting spring فرامل	Applicability: TB42S Model Year: 1987-10-01 - 1993-08-01	2
44091-01J10	44091	Drum brake shoe mounting spring فرامل	Applicability: TB42S Model Year: 1987-10-01 - 1993-08-01	2

Part Number رقم القطعة	Diagram Ref مرجع المخطط	Part Name اسم القطعة	Details التفاصيل	Qty الكمية
01436-00052	44100B	BOLT مسمار	Applicability: TB42S Model Year: 1987-10-01 - 1993-08-01	4
D4100-01J90	44100K	Brake slave cylinder (repair kit) فرامل	Applicability: TB42S Specification: Nabco 1 Model Year: 1987-10-01 - 1993-08-01	1
44100-01J11	44100P	Brake slave cylinder فرامل	Applicability: TB42S Specification: Nabco 1 Model Year: 1987-10-01 - 1993-08-01	2
44108-01J00	44108	Piston, Cylinder	Applicability: TB42S Specification: Nabco Model Year: 1987-10-01 - 1993-08-01	4
AY260-NN008	44112	Cup, Piston	Applicability: TB42S Specification: Nabco Model Year: 1987-10-01 - 1993-08-01	4
44124-01J00	44124	Dust cover غطاء	Applicability: TB42S Specification: Nabco Model Year: 1987-10-01 - 1993-08-01	4
44125-01J00	44125	Spring ياي / نابض	Applicability: TB42S Specification: Nabco Model Year: 1987-10-01 - 1993-08-01	2
41128-U3400	44128	Fastening bolt مسمار	Applicability: TD42 Specification: For disc brakes Model Year: 1987-10-01 - 1991-10-01	2
41128-U5200	44128	Fastening bolt مسمار	Applicability: TB42S Specification: Drum Brake Nabco Model Year: 1987-10-01 - 1993-08-01	2
41129-U0201	44129	Cap, Breeder Screw غطاء برغي	Applicability: TB42S Specification: Nabco Model Year: 1987-10-01 - 1993-08-01	2
00922-50510	44135	Rings, retaining	Applicability: TB42S Model Year: 1987-10-01 - 1993-08-01	2
44200-01J10	44200N	Ajiastar Atsusembry, Rear Brake RH فرامل	Applicability: TB42S Model Year: 1987-10-01 - 1993-08-01	1
44200-01J10	44201	Ajiastar Atsusembry, Rear Brake LH فرامل	Applicability: TB42S Model Year: 1987-10-01 - 1995-08-01	1
44210-01J10	44209M	Lever, Adjuster LH	Applicability: TB42S Model Year: 1987-10-01 - 1993-08-01	1
44210-01J10	44209N	Lever, Adjuster RH	Applicability: TB42S Model Year: 1987-10-01 - 1993-08-01	1
08184-4201A	081844201A	Unknown		
08915-2441A	089152441A	Unknown		

FILTERS .022
الفلاتر

CONTROL VALVE (ATM)

تحكم صمام

https://www.nengun.com/oem/parts/323458/MiPwn5qAMfCfmoIwNfCfmpxEMzHwn5q9MDAy8J-QiW9sZC1qcC0xMjgtRDMxLTA1LTAwMg/Control+Valve+%28atm%29/3fec9d41e9d2c015

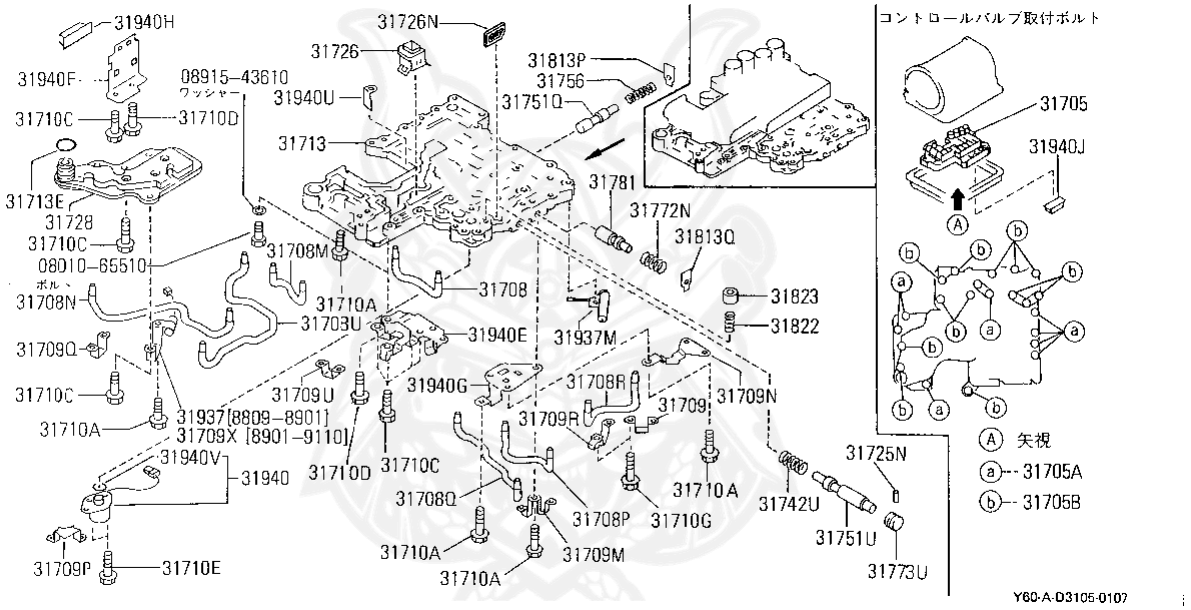

Part Number رقم القطعة	Diagram Ref مرجع المخطط	Part Name اسم القطعة	Details التفاصيل	Qty الكمية
31705-51X06	31705	Valve assembly, control صمام مجموعة تحكم	Applicability: AT Model Year: 1988-09-01 - 1989-01-01	2
01121-02941	31705A	Fastening bolt مسمار	Applicability: AT Model Year: 1988-09-01 -	8
01121-02911	31705B	Fastening bolt مسمار	Applicability: AT Model Year: 1988-09-01 -	12
31708-41X19	31708	Tube, connector control valve تحكم صمام	Applicability: AT Model Year: 1988-09-01 -	1
31708-41X20	31708M	Tube, connector control valve تحكم صمام	Applicability: AT Model Year: 1988-09-01 -	1
31708-41X14	31708N	Tube, connector control valve تحكم صمام	Applicability: AT Model Year: 1988-09-01 -	1
31708-41X15	31708P	Tube, connector control valve تحكم صمام	Applicability: AT Model Year: 1988-09-01 - 1993-08-01	1
31708-41X18	31708Q	Tube, connector control valve تحكم صمام	Applicability: AT Model Year: 1988-09-01 - 1993-08-01	1
31708-41X22	31708R	Tube, connector control valve تحكم صمام	Applicability: AT Model Year: 1988-09-01 -	1
31708-41X21	31708U	Tube, connector control valve تحكم صمام	Applicability: AT Model Year: 1988-09-01 -	1
31709-41X20	31709	Bracket, control valve, body حامل تحكم صمام بودي	Applicability: AT Model Year: 1988-09-01 -	1
31709-41X17	31709M	Bracket, control valve, body حامل تحكم صمام بودي	Applicability: AT Model Year: 1988-09-01 - 1993-08-01	1
31709-41X18	31709N	Bracket, control valve, body حامل تحكم صمام بودي	Applicability: AT Model Year: 1988-09-01 - 1990-08-01	1
31709-41X16	31709P	Bracket, control valve, body حامل تحكم صمام بودي	Applicability: AT Model Year: 1988-09-01 - 1989-05-01	1
31709-41X19	31709Q	Bracket, control valve, body حامل تحكم صمام بودي	Applicability: AT Model Year: 1988-09-01 -	1
31709-41X21	31709R	Bracket, control valve, body حامل تحكم صمام بودي	Applicability: AT Model Year: 1988-09-01 - 1989-01-01	1

Part Number رقم القطعة	Diagram Ref مرجع المخطط	Part Name اسم القطعة	Details التفاصيل	Qty الكمية
31709-41X22	31709U	Bracket, control valve, body حامل تحكم صمام بودي	Applicability: AT Model Year: 1988-09-01 -	1
01121-02911	31710A	Fastening bolt مسمار	Applicability: AT Model Year: 1988-09-01 -	14
01121-02951	31710C	Fastening bolt مسمار	Applicability: AT Model Year: 1988-09-01 -	10
01121-03071	31710D	Fastening bolt مسمار	Applicability: AT Model Year: 1988-09-01 -	2
01121-03081	31710E	BOLT مسمار	Applicability: AT Model Year: 1988-09-01 -	2
01121-02911	31710G	Fastening bolt مسمار	Applicability: AT Model Year: 1988-09-01 -	2
31713-41X06	31713	Body lower control valve بودي تحكم صمام	Applicability: AT Model Year: 1988-09-01 -	1
31526-41X07	31713E	SEAL,O RING	Applicability: AT Model Year: 1988-09-01 -	1
31725-01X00	31725N	Pin, Parallel Control Valve تحكم صمام	Applicability: AT Model Year: 1988-09-01 - 1993-08-01	1
31726-41X00	31726	AUTO TRANSMISSION OIL FILTER ASSEMBLY ناقل الحركة مجموعة	Applicability: AT Model Year: 1988-09-01 - 1993-08-01	1
31728-41X01	31728	OIL STRAINER ASSEMBLY مجموعة	Applicability: AT Model Year: 1988-09-01 - 1993-08-01	1
31742-41X06	31742U	Automatic transmission valve spring ناقل الحركة صمام	Applicability: AT Model Year: 1988-09-01 - 1993-08-01	1
31772-27X00	31751Q	Valve, 1st Re-using صمام	Applicability: AT Model Year: 1988-09-01 - 1993-08-01	1
31772-41X03	31751U	Automatic transmission valve spring ناقل الحركة صمام	Applicability: AT Model Year: 1988-09-01 - 1993-08-01	1
31756-41X05	31756	Automatic transmission valve spring ناقل الحركة صمام	Applicability: AT Model Year: 1988-09-01 - 1993-08-01	1
31742-41X08	31772N	Automatic transmission valve spring ناقل الحركة صمام	Applicability: AT Model Year: 1988-09-01 - 1993-08-01	1
31845-21X00	31773U	Plug	Applicability: AT Model Year: 1988-09-01 - 1993-08-01	1
31772-41X04	31781	Automatic transmission valve spring ناقل الحركة صمام	Applicability: AT Model Year: 1988-09-01 - 1991-10-01	1
31813-21X00	31813P	Plate, retainer	Applicability: AT Model Year: 1988-09-01 - 1993-08-01	1
31813-21X00	31813Q	Plate, retainer	Applicability: AT Model Year: 1988-09-01 - 1993-08-01	1
31822-X0101	31822	Spring, check orifice	Applicability: AT Model Year: 1988-09-01 - 1993-08-01	1
31823-41X01	31823	Valve, check orifice صمام	Applicability: AT Model Year: 1988-09-01 - 1991-10-01	1
31937-41X01	31937	Sensor Atsusembry, Temperature حساس	Applicability: AT Model Year: 1988-09-01 - 1989-01-01	1
31958-41X00	31937M	Sensor Atsusembry, Temperature حساس	Applicability: AT Model Year: 1988-09-01 - 1993-08-01	1
31940-71X00	31940	Torque converter clutch solenoid valve صمام	Applicability: AT Model Year: 1988-09-01 - 1989-05-01	1
31718-41X07	31940E	Clip, Harness مشبك	Applicability: AT Model Year: 1988-09-01 - 1993-08-01	1
31718-41X04	31940G	Clip, harness مشبك	Applicability: AT Model Year: 1988-09-01 - 1993-08-01	1
31718-41X05	31940J	Clip, harness مشبك	Applicability: AT Model Year: 1988-09-01 - 1993-08-01	1
31526-41X08	31940V	Seal Ring جلدة	Applicability: AT Model Year: 1988-09-01 - 1993-08-01	1
08010-65510	0801065510	Unknown		
08915-43610	0891543610	Unknown		

MULTI-PURPOSE PARTS .023
قطع متعددة الاستخدام

EXHAUST TUBE & MUFFLER

https://www.nengun.com/oem/parts/323458/MiPwn5qAMfCfmoIwMfCfmpxBMjDwn5q9MDAy8J-QiW9sZC1qcC0xMjgtQTIwLTAxLTAwMg/Exhaust+Tube+%26+Muffler/e667872afa534780

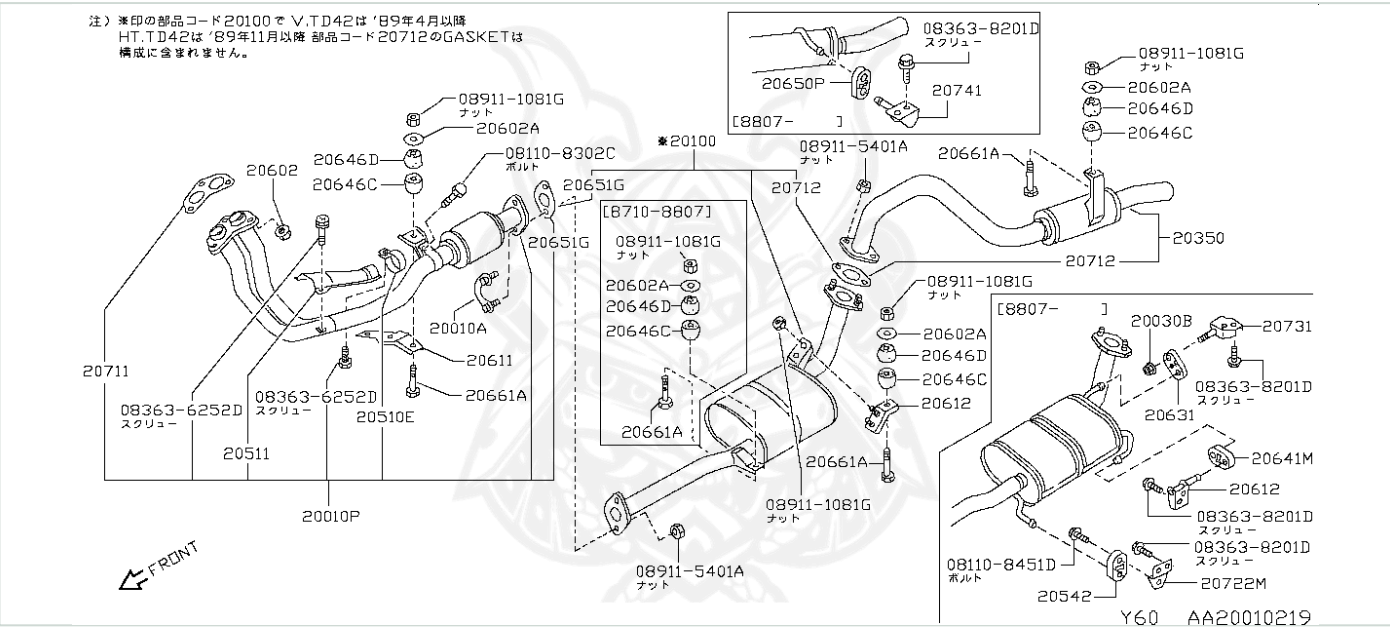

Part Number رقم القطعة	Diagram Ref مرجع المخطط	Part Name اسم القطعة	Details التفاصيل	Qty الكمية
01115-00181	20010A	Fastening bolt مسمار	Applicability: TB42S Model Year: 1987-10-01 - 1989-09-01	2
20608-01G0A	20010A	Bolt مسمار		
20608-01G00	20010A	Replaced by 20608-01G0A		1
B0020-06J00	20010P	Tube assembly, exhaust front with flexible مجموعة	Applicability: V.TD42 Model Year: 1987-10-01 - 1989-09-01	1
B0020-06J10	20010P	Tube assembly, exhaust front with flexible مجموعة	Applicability: HT.TD42 Model Year: 1987-10-01 - 1989-09-01	1
20100-06J00	20100	Muffler-assembly, Exhaust Main	Applicability: V.TD42 Specification: [B517] Model Year: 1987-10-01 - 1989-04-01	1
20100-09J00	20100	Muffler, Exhaust Main	Applicability: TB42S Specification: [B517] Model Year: 1987-10-01 - 1989-09-01	1
B0100-01J00	20100	Exhaust Main Muffler Assembly مجموعة	Applicability: HT.TD42 Specification: [B517] Model Year: 1987-10-01 - 1989-11-01	1
B0050-06J00	20350	Rear Muffler Assembly مجموعة	Applicability: TD42 Specification: [B517] Model Year: 1987-10-01 - 1989-09-01	1
20565-06J00	20510E	Clamp, Heat Insulator, Front	Applicability: TD42 Model Year: 1987-10-01 - 1989-09-01	1
20516-06J10	20511	Exhaust manifold heat-insulating screen	Applicability: TD42.AT Model Year: 1988-09-01 - 1989-09-01	1
20516-06J00	20511	Exhaust manifold heat-insulating screen	Applicability: TD42 Model Year: 1987-10-01 - 1988-09-01	1
20640-34T00	20542	EXHAUST RUBBER MOUNT	Applicability: V/LR +V/HR +HT Model Year: 1987-10-01 - 1991-03-01	1
20602-41G0A	20602	Nut صامولة		
20602-41G00	20602	Replaced by 20602-41G0A		3
20602-F1700	20602	Nut صامولة	Applicability: TB42S Model Year: 1987-10-01 - 1989-09-01	3
20135-B5000	20602A	Washer وردة	Applicability: V.TD42 Model Year: 1987-10-01 - 1989-09-01	4

Part Number رقم القطعة	Diagram Ref مرجع المخطط	Part Name اسم القطعة	Details التفاصيل	Qty الكمية
20610-T8000	20611	Silencer holder	Applicability: TB42S Model Year: 1987-10-01 - 1989-09-01	3
20712-06J01	20611	Silencer holder	Applicability: TD42 Model Year: 1987-10-01 - 1989-09-01	1
20732-06J00	20612	Silencer holder	Applicability: TD42 Model Year: 1987-10-01 - 1989-09-01	1
20136-B5001	20646C	Insulator, Exhaust Mounting Rubber	Applicability: TB42S Model Year: 1987-10-01 - 1989-09-01	3
20137-B5001	20646D	INSULATOR ASSEMBLY-EXHAUST MOUNTING	Applicability: HT.TD42 Model Year: 1987-10-01 - 1989-09-01	3
20692-02E00	20651G	Exhaust Gasket وجه	Applicability: TD42 Model Year: 1987-10-01 - 1989-09-01	1
20606-06J00	20661A	Fastening bolt مسمار	Applicability: V.TD42 Model Year: 1987-10-01 - 1989-09-01	4
20138-B5000	20661A	Fastening bolt مسمار	Applicability: TB42S Model Year: 1987-10-01 - 1989-09-01	3
20691-01P80	20711	Exhaust Gasket وجه		
20711-01P00	20711	Replaced by 20691-01P80		1
20692-02E00	20712	Exhaust Gasket وجه	Applicability: TD42 Model Year: 1987-10-01 - 1989-09-01	1
08110-8302C	081108302C	Unknown		
08110-8451D	081108451D	BOLT مسمار		
08363-6252D	083636252D	BOLT مسمار		
08363-8201D	083638201D	Unknown		
08911-1081G	089111081G	Grometsuto		
08911-5401A	089115401A	NUT صامولة		

OTHERS .024
أخرى

BODY SIDE MOLDING

بودي

https://www.nengun.com/oem/parts/323458/MiPwn5qAMfCfmoIwN_CfmpxINjLwn5q9MDAx8J-QiW9sZC1qcC0xMjgtSDYyLTA3LTAwMQ/Body+Side+Molding/a048b5a58ce799e7

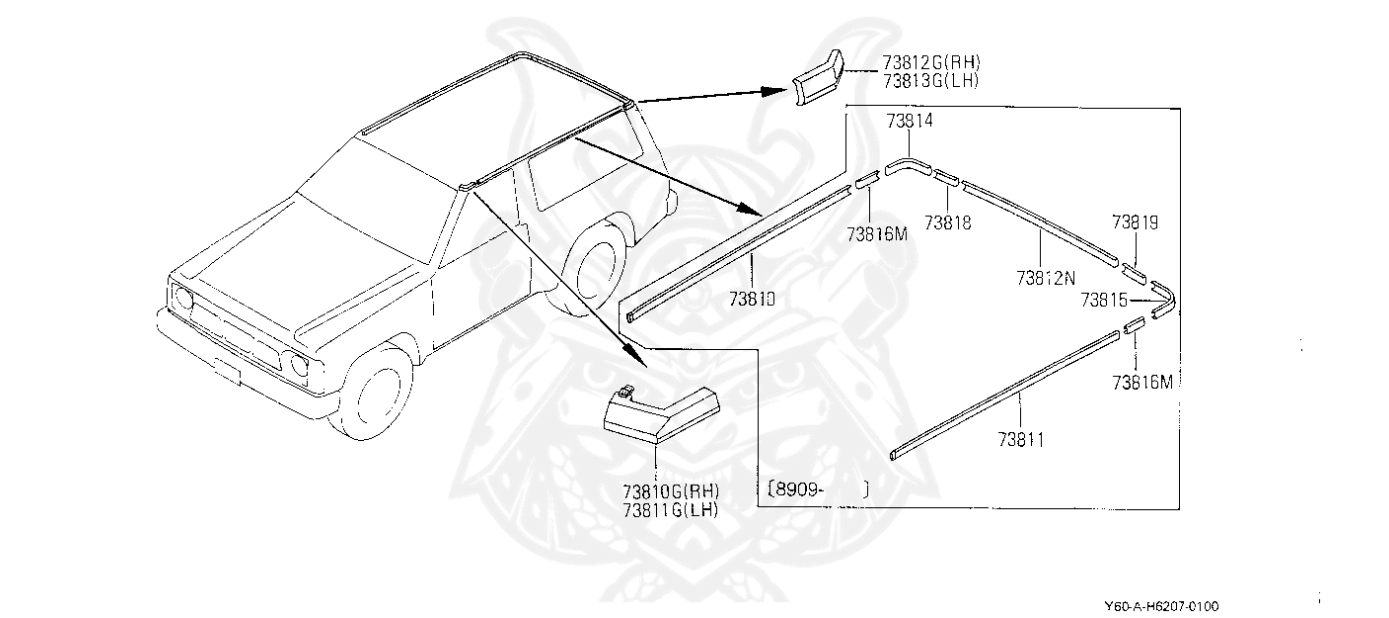

Part Number رقم القطعة	Diagram Ref مرجع المخطط	Part Name اسم القطعة	Details التفاصيل	Qty الكمية
76844-06J00	73810G	End Cap, Roof Side Molding Front Rh غطاء	Applicability: F Model Year: 1987-10-01 - 1994-10-01	1
76845-06J00	73811G	End cap, roof side molding, front left hand غطاء	Applicability: F Model Year: 1987-10-01 -	1
76846-06J00	73812G	END CAP-ROOF SIDE MOULDING, REAR	Applicability: HT +V Specification: Side Right, Rear Right Model Year: 1987-10-01 - 1991-02-01	2
76847-06J00	73813G	END CAP-ROOF SIDE MOULDING, REAR	Applicability: HT +V Specification: Side left, rear left Model Year: 1987-10-01 - 1991-02-01	2
76848-06J10	73818	Joint, Molding RH	Applicability: *(V/LR+V/HR).GR Specification: Front Wind & Drip Molding Show Model Year: 1987-10-01 - 1991-02-01	1

OTHERS .025
أخرى

CAR JACK

https://www.nengun.com/oem/parts/323458/MiPwn5qAMfCfmoIxMPCfmpxIOTnwn5q9MDAx8J-QiW9sZC1qcC0xMjgtSDk5LTEwLTAwMQ/Car+Jack/b651d68f3577fcf6

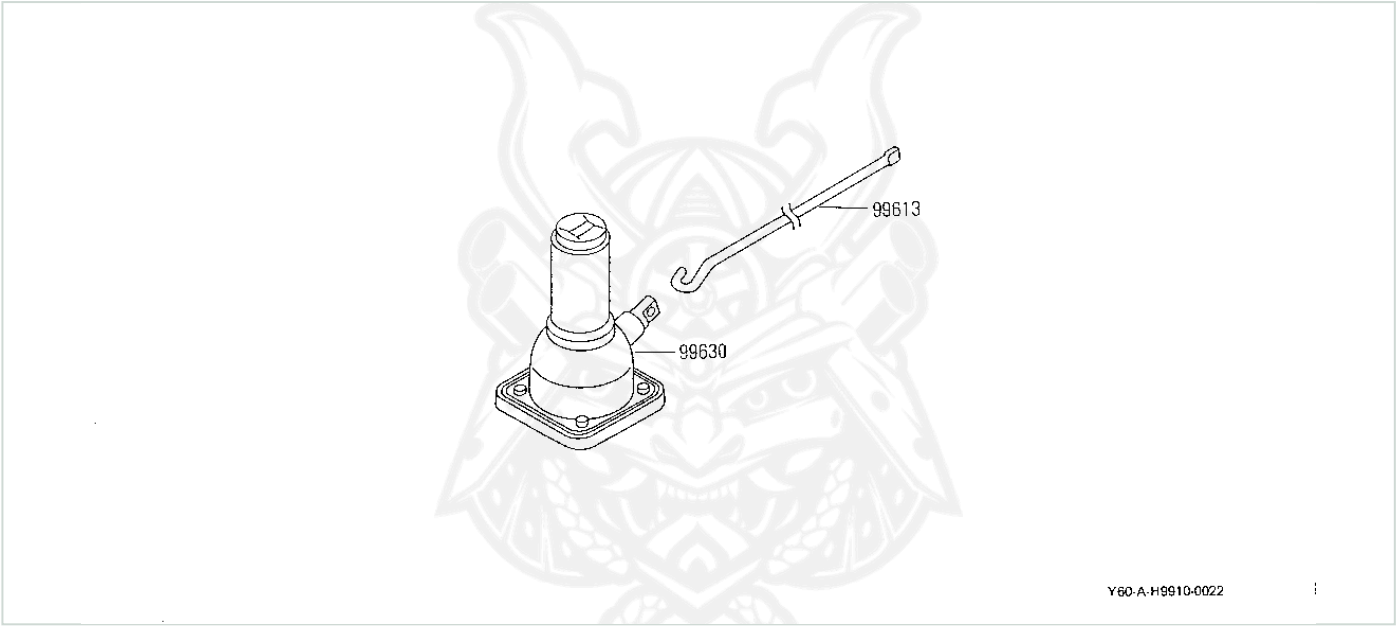

Part Number رقم القطعة	Diagram Ref مرجع المخطط	Part Name اسم القطعة	Details التفاصيل	Qty الكمية
99552-VB000	99613	Rod, Jack Handle		
99552-01J00	99613	Replaced by 99552-VB000		1
99551-06J00	99630	Jacks, Hydraulic Type	Applicability: ALL Model Year: 1987-10-01 - 1993-08-01	1

OTHERS .026
أخرى

HEATERS, COOLERS AND AIR CONDITIONERS
هواء

https://www.nengun.com/oem/parts/323458/MiPwn5qAMfCfmoIzMPCfmpxHMjfwn5q9MDA08J-QiW9sZC1qcC0xMjgtRzI3LTMwLTAwNA/Heaters%2C+Coolers+And+Air+Conditioners/12f0f5fb9ca3bed8

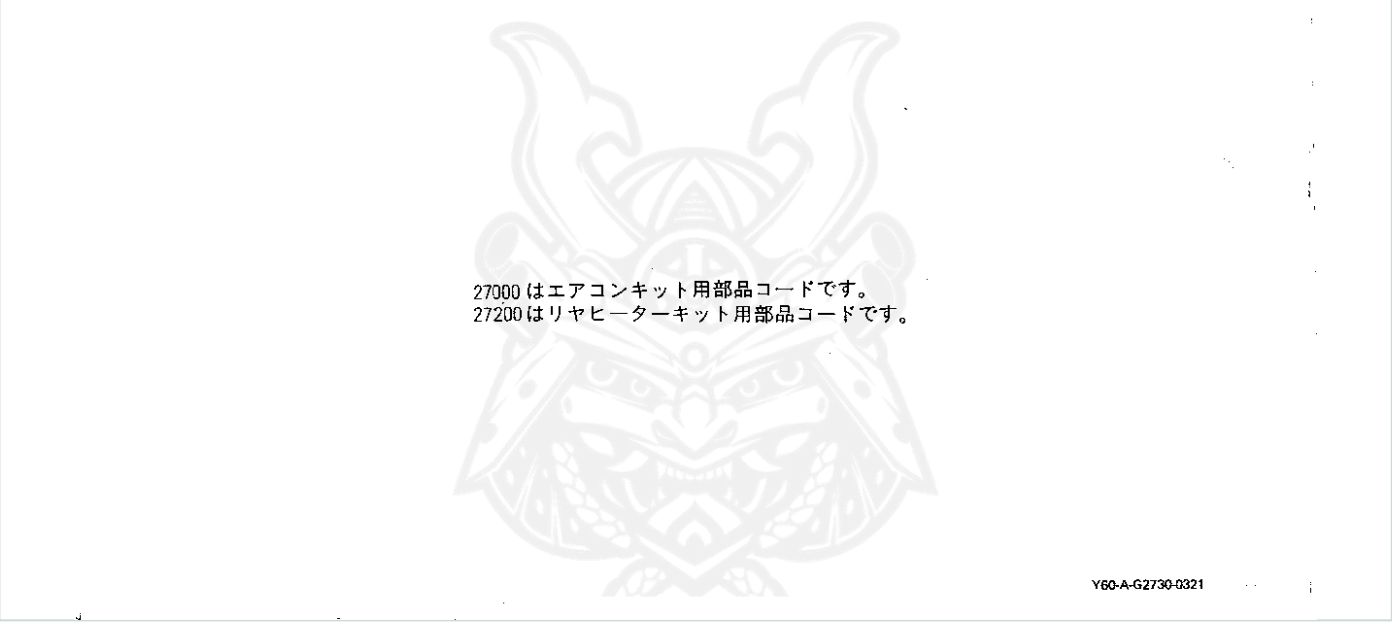

Part Number رقم القطعة	Diagram Ref مرجع المخطط	Part Name اسم القطعة	Details التفاصيل	Qty الكمية
B7000-05J00	27000	Air conditioner kit هواء	Applicability: *TD42 Specification: Air conditioner kit [B517] Model Year: 1987-10-01 - 1991-10-01	1
B7000-09J00	27000	Air conditioner kit هواء	Applicability: *F Specification: Air conditioner kit [B517] Model Year: 1988-05-01 - 1991-10-01	1
B7300-01J00	27200	Heater kit, rear	Applicability: *V.DX Specification: *=Rear Heater Kit [B517] Model Year: 1987-10-01 - 1989-09-01	1

OTHERS .027
أخرى

HEATERS, COOLERS AND AIR CONDITIONERS (FITTING)

هواء

https://www.nengun.com/oem/parts/323458/MiPwn5qAMfCfmoIzMvCfmpxHMjfwn5q9MDA08J-QiW9sZC1qcC0xMjgtRzI3LTMyLTAwNA/Heaters%2C+Coolers+And+Air+Conditioners+%28fitting%29/1720c7dd79a26b71

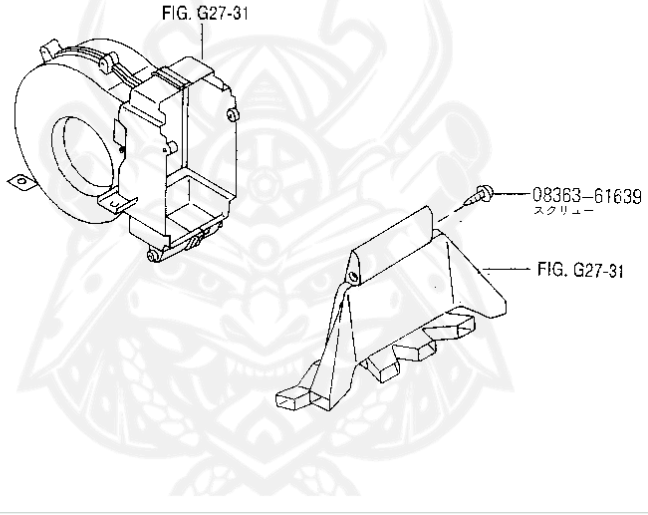

Part Number رقم القطعة	Diagram Ref مرجع المخطط	Part Name اسم القطعة	Details التفاصيل	Qty الكمية
27305-01J00	27211	Heating Unit Assembly, Rear وحدة مجموعة	Applicability: HT +V.LR.AD +V.HR +*V.DX Specification: *=RIYAHITA-YOU Model Year: 1987-10-01 - 1989-09-01	1
27840-01J00	27256M	Air duct outlet No. 5 هواء	Applicability: HT +V.LR.AD +V.HR +*V.DX Specification: *=Riya Heater [B517] Model Year: 1987-10-01 - 1989-09-01	1
08363-61639	0836361639	Bolt مسمار		

OTHERS .028
أخرى

REAR WINDOW

https://www.nengun.com/oem/parts/323458/MiPwn5qAMfCfmoIwNPCfmpxINzbwn5q9MDAx8J-QiW9sZC1qcC0xMjgtSDc2LTA0LTAwMQ/Rear+Window/ed8cb844989eca7a

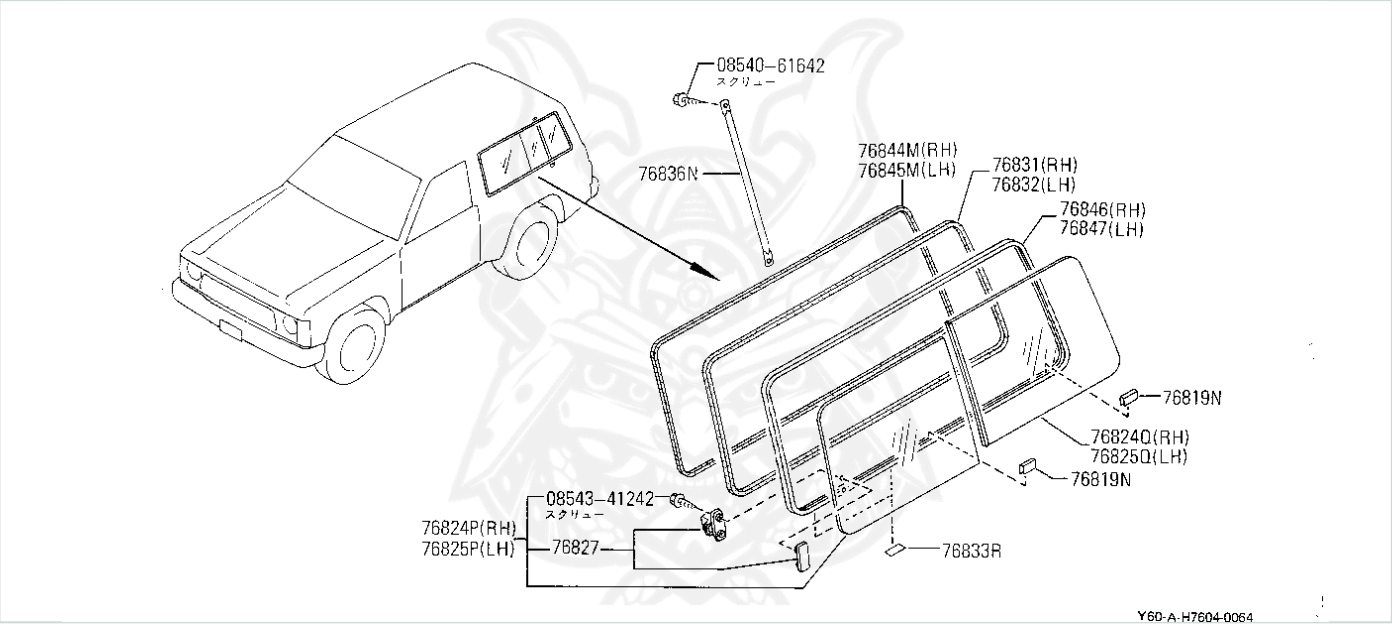

Part Number رقم القطعة	Diagram Ref مرجع المخطط	Part Name اسم القطعة	Details التفاصيل	Qty الكمية
93659-C6000	76819N	Stopper, Side Windows	Applicability: HT Model Year: 1987-10-01 - 1991-02-01	4
83012-01J20	76824P	GLASS, SIDE WINDOW FIRST OUTER RH زجاج	Applicability: HT Specification: Bronze [D608] Model Year: 1987-10-01 - 1991-02-01	1
83014-01J20	76824Q	GLASS-SIDE WINDOW,1ST INNER RH	Applicability: HT Specification: Bronze [D608] Model Year: 1987-10-01 - 1991-02-01	1
83013-01J20	76825P	GLASS, SIDE WINDOW FIRST OUTER LH زجاج	Applicability: HT Specification: Bronze [D608] Model Year: 1987-10-01 - 1991-02-01	1
83015-01J20	76825Q	GLASS-SIDE WINDOW,1ST INNER LH	Applicability: HT Specification: Bronze [D608] Model Year: 1987-10-01 - 1991-02-01	1
82342-0Y000	76827	Lock, Side Window		
82342-06J00	76827	Replaced by 82342-0Y000		2
83332-01J00	76831	Weatherstrip, Side Window Rh	Applicability: HT Model Year: 1987-10-01 - 1991-02-01	1
83333-01J00	76832	Weatherstrip, Side Window Lh	Applicability: HT Model Year: 1987-10-01 - 1991-02-01	1
82345-01C00	76833R	Inner Seal, Side Window جلدة	Applicability: HT Model Year: 1987-10-01 - 1991-02-01	4
83880-02J00	76836N	Bar, Guard Center	Applicability: HT Model Year: 1987-10-01 - 1993-08-01	2
83880-05J00	76836N	Bar, Guard Center	Applicability: V Model Year: 1987-10-01 - 1993-08-01	2
83336-01J00	76844M	Glass Runner, Side Window 1st Rh زجاج	Applicability: HT Model Year: 1987-10-01 - 1991-02-01	1
83337-01J00	76845M	Glass Runner, Side Window 1st Lh زجاج	Applicability: HT Model Year: 1987-10-01 - 1991-02-01	1
83210-01J00	76846	Sash Assembly, Side Window Rh مجموعة	Applicability: HT Model Year: 1987-10-01 - 1991-02-01	1
83211-01J00	76847	Satchew Assembly, Side Window Lh مجموعة	Applicability: HT Model Year: 1987-10-01 - 1991-02-01	1

Part Number رقم القطعة	Diagram Ref مرجع المخطط	Part Name اسم القطعة	Details التفاصيل	Qty الكمية
08540-61642	0854061642	Unknown		
08543-4122A	0854341242	Screw برغي		
08543-41242	0854341242	Replaced by 08543-4122A		

OTHERS .029
أخرى

TRANSFER CONTROLLER & LINKAGE

https://www.nengun.com/oem/parts/323458/MiPwn5qAMfCfmoIwMvCfmpxEMzTwn5q9MDAx8J-QiW9sZC1qcC0xMjgtRDM0LTAyLTAwMQ/Transfer+Controller+%26+Linkage/b41d817f383b5e5b

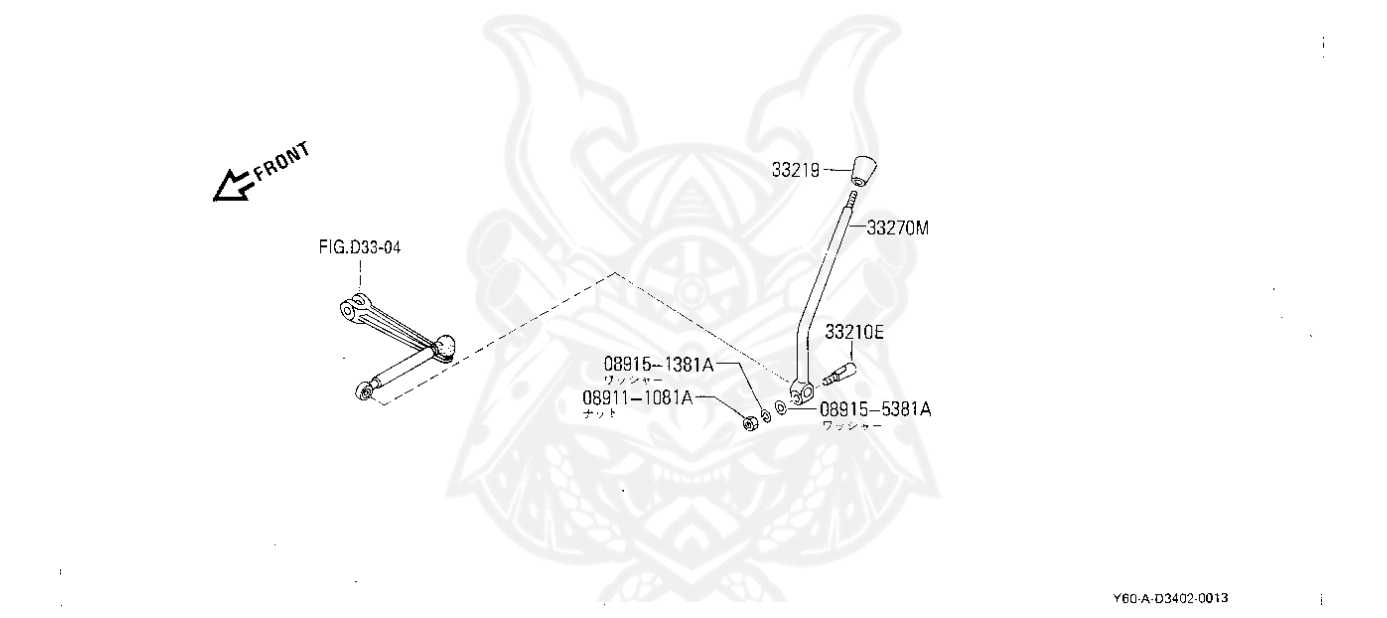

Part Number رقم القطعة	Diagram Ref مرجع المخطط	Part Name اسم القطعة	Details التفاصيل	Qty الكمية
22183-0403P	33210E	Pink, Lock	Applicability: F Model Year: 1987-10-01 -	1
33219-06J00	33219	Knob, Control Transfer تحكم	Applicability: AT Model Year: 1988-09-01 - 1991-10-01	1
33219-33G00	33219	Knob, Control Transfer تحكم	Applicability: F Model Year: 1987-10-01 -	1
33219-41G00	33219	Shift Knob, Transfer	Applicability: TD42.F5 Model Year: 1987-10-01 - 1991-10-01	1
33274-01J00	33270M	Lever complete, transfer control تحكم	Applicability: TD42.F5 Model Year: 1987-10-01 - 1991-10-01	1
33274-02J00	33270M	Lever complete, transfer control تحكم	Applicability: AT Model Year: 1988-09-01 - 1991-10-01	1
33274-09J00	33270M	Lever complete, transfer control تحكم	Applicability: F Model Year: 1987-10-01 -	1
08911-1081A	089111081A	Nut صامولة		
08915-1381A	089151381A	WASHER وردة		
08915-5381A	089155381A	PLAIN WASHER وردة		

OTHERS .030
أخرى

TRANSFER SHIFT CONTROL

تحكم

https://www.nengun.com/oem/parts/323458/MiPwn5qAMfCfmoIwNPCfmpxEMzPwn5q9MDAy8J-QiW9sZC1qcC0xMjgtRDMzLTA0LTAwMg/Transfer+Shift+Control/45e5f09d380fe480

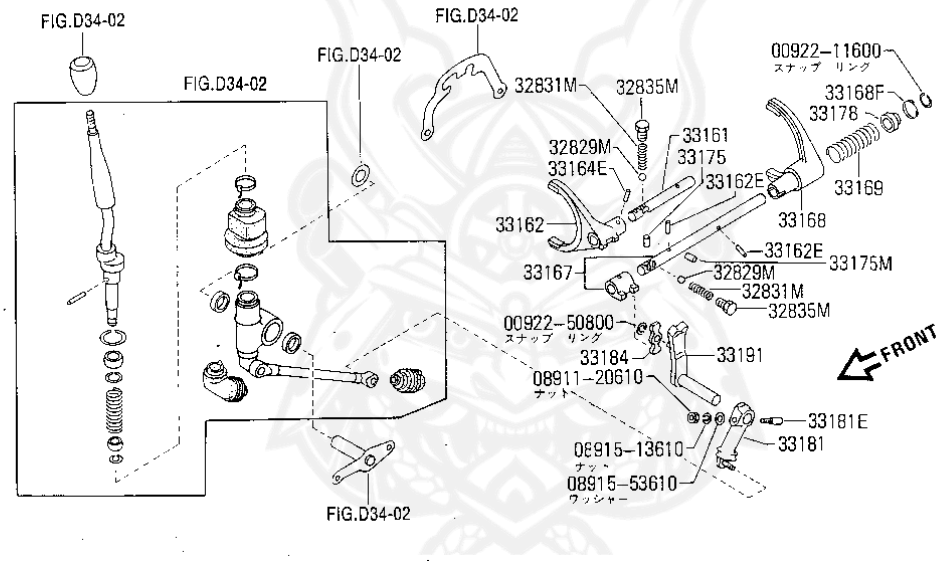

Part Number رقم القطعة	Diagram Ref مرجع المخطط	Part Name اسم القطعة	Details التفاصيل	Qty الكمية
32829-26760	32829M	Ball, Steel	Applicability: TD42.F5 +AT Model Year: 1988-09-01 - 1989-09-01	2
32830-C6200	32831M	Spring, Locking Ball	Applicability: TB42S.F5 Model Year: 1987-10-01 - 1989-09-01	1
32830-31G00	32831M	Spring, Locking Ball	Applicability: TD42.F5 +AT Model Year: 1988-09-01 - 1989-09-01	2
32834-33G00	32835M	Plugs, Chesking Balls	Applicability: TD42.F5 +AT Model Year: 1988-09-01 - 1989-09-01	2
33161-C8000	33161	Rod, Shift Low & High	Applicability: TB42S.F5 Model Year: 1987-10-01 - 1989-09-01	1
33161-01J01	33161	Rod, Shift Low & High	Applicability: TD42.F5 Model Year: 1987-10-01 - 1989-09-01	1
33161-06J03	33161	Rod, Shift Low & High	Applicability: AT Model Year: 1988-09-01 - 1989-09-01	1
33162-C6200	33162	Fork, Shift Low & High	Applicability: TB42S.F5 Model Year: 1987-10-01 - 1989-09-01	1
33162-01J00	33162	Fork, Shift Low & High	Applicability: TD42.F5 Model Year: 1987-10-01 - 1988-09-01	1
32883-61500	33162E	Pin, retaining	Applicability: TB42S.F5 Model Year: 1987-10-01 - 1989-09-01	2
33165-33G00	33162E	Pin, retaining	Applicability: TD42.F5 +AT Model Year: 1988-09-01 - 1989-09-01	2
33165-33G00	33164E	Pin, retaining	Applicability: TD42.F5 +AT Model Year: 1988-09-01 - 1989-09-01	1
33166-01J00	33167	Rod, Shift, Front Drive	Applicability: TD42.F5 +AT Model Year: 1988-09-01 - 1989-09-01	1
33167-C6200	33167	Rod, Shift, Front Drive	Applicability: TB42S.F5 Model Year: 1987-10-01 - 1989-09-01	1
33168-01J00	33168	Fork, Shift, Front Drive	Applicability: TD42.F5 Model Year: 1987-10-01 - 1988-09-01	1
33168-C6200	33168	Fork, Shift, Front Drive	Applicability: TB42S.F5 Model Year: 1987-10-01 - 1989-09-01	1
33176-33G00	33168F	Ring, retainer, shift fork	Applicability: TD42.F5 Model Year: 1987-10-01 - 1988-09-01	1
33176-C6200	33168F	Ring, retainer, shift fork	Applicability: TB42S.F5 Model Year: 1987-10-01 - 1989-09-01	2
33169-C6200	33169	Spring, Shift Fork	Applicability: TB42S.F5 Model Year: 1987-10-01 - 1989-09-01	1
33169-31G00	33169	Spring, Shift Fork	Applicability: TD42.F5 +AT Model Year: 1988-09-01 - 1989-09-01	1
33175-C6900	33175	Plane, Interlock	Applicability: TD42.F5 +AT Model Year: 1988-09-01 - 1989-09-01	1
33175-C6200	33175	Plane, Interlock	Applicability: TB42S.F5 Model Year: 1987-10-01 - 1989-09-01	1
33183-01J00	33175M	Pin, Plunger	Applicability: AT Model Year: 1988-09-01 - 1989-09-01	1
33178-01J00	33178	Color, Fork Guide	Applicability: TD42.F5 Model Year: 1987-10-01 - 1988-09-01	1
33186-01J00	33181	Lever, Shift	Applicability: TD42.F5 Model Year: 1987-10-01 - 1989-09-01	1

Part Number رقم القطعة	Diagram Ref مرجع المخطط	Part Name اسم القطعة	Details التفاصيل	Qty الكمية
33186-02J00	33181	Lever, Shift	Applicability: AT Model Year: 1988-09-01 - 1989-09-01	1
33180-C6200	33181	Lever, Shift	Applicability: TB42S.F5 Model Year: 1987-10-01 - 1989-09-01	1
32917-E9301	33181E	Pink, Lock	Applicability: TD42.F5 +AT Model Year: 1988-09-01 - 1989-09-01	1
33188-C6900	33181E	Pink, Lock	Applicability: TB42S.F5 Model Year: 1987-10-01 - 1989-09-01	1
33184-C6900	33184	Lever, Def	Applicability: TB42S.F5 Model Year: 1987-10-01 - 1989-09-01	1
33190-01J00	33191	Crossshaft, Cross Shift	Applicability: TD42.F5 +AT Model Year: 1988-09-01 - 1989-09-01	1
00922-11600	0092211600	Unknown		
00922-50800	0092250800	Unknown		
08911-20610	0891120610	NUT صامولة		
08915-13610	0891513610	Washer وردة		
08915-53610	0891553610	Unknown		

OTHERS .031
أخرى

TRANSMISSION & TRANSAXLE ASSEMBLY

ناقل الحركة مجموعة

https://www.nengun.com/oem/parts/323458/MiPwn5qAMfCfmoIwMfCfmpxEMzLwn5q9MDA08J-QiW9sZC1qcC0xMjgtRDMyLTAxLTAwNA/Transmission+%26+Transaxle+Assembly/badef491f80bddf4

部品名称	FIG.No.	部品コード	32010K	部品名称	FIG.No.	部品コード	32010K
ガスケット，シールキット トランスミッション	D32-01	32010K	—	ガスケット，トップ カバー	D32-04	32174E	1
シール，オイル フロント カバー	D32-02	32113	1	ガスケット，ハウジング カバー	D32-04	32169M	1
ガスケット，フロント カバー	D32-02	32112	1	ガスケット，シフト ハウジング	D32-04	32169	1
パッキング，PTOカバー	D32-02	32129	1	シール，オイル トランスファー カバー	D33-02	33114N	1
ガスケット，オーバードライブ ケース	D32-02	32134N	1	シール，オイル シフト シャフト	D33-02	33185M	1
シール，オイル オーバードライブ ギヤ ケース	D32-02	32136M	1	シール，オイル トランスファー ケース	D33-02	33114M	1
シール，オイル シフト カバー	D32-02	32524	1	シール，オイル トランスファー ケース	D33-02	33114	1

（注）構成部品は，各FIG.に案内されています。

Y60-A-D3201-0158

Part Number رقم القطعة	Diagram Ref مرجع المخطط	Part Name اسم القطعة	Details التفاصيل	Qty الكمية
32162-01J25	32010K	Gasket & Seal Kit, Transmission وجه جلدة ناقل الحركة	Applicability: TD42.F5 Model Year: 1987-10-01 - 1993-08-01	1
32169-J2028	32010K	Gasket & Seal Kit, Transmission وجه جلدة ناقل الحركة	Applicability: TB42S.F5 Model Year: 1987-10-01 - 1993-08-01	1

OTHERS .032
أخرى

VENTURI UNIT

وحدة

https://www.nengun.com/oem/parts/323458/MiPwn5qAMfCfmoIzMfCfmpxDMTbwn5q9MDAx8J-QiW9sZC1qcC0xMjgtQzE2LTMxLTAwMQ/Venturi+Unit/b5c389256fa1e6fa

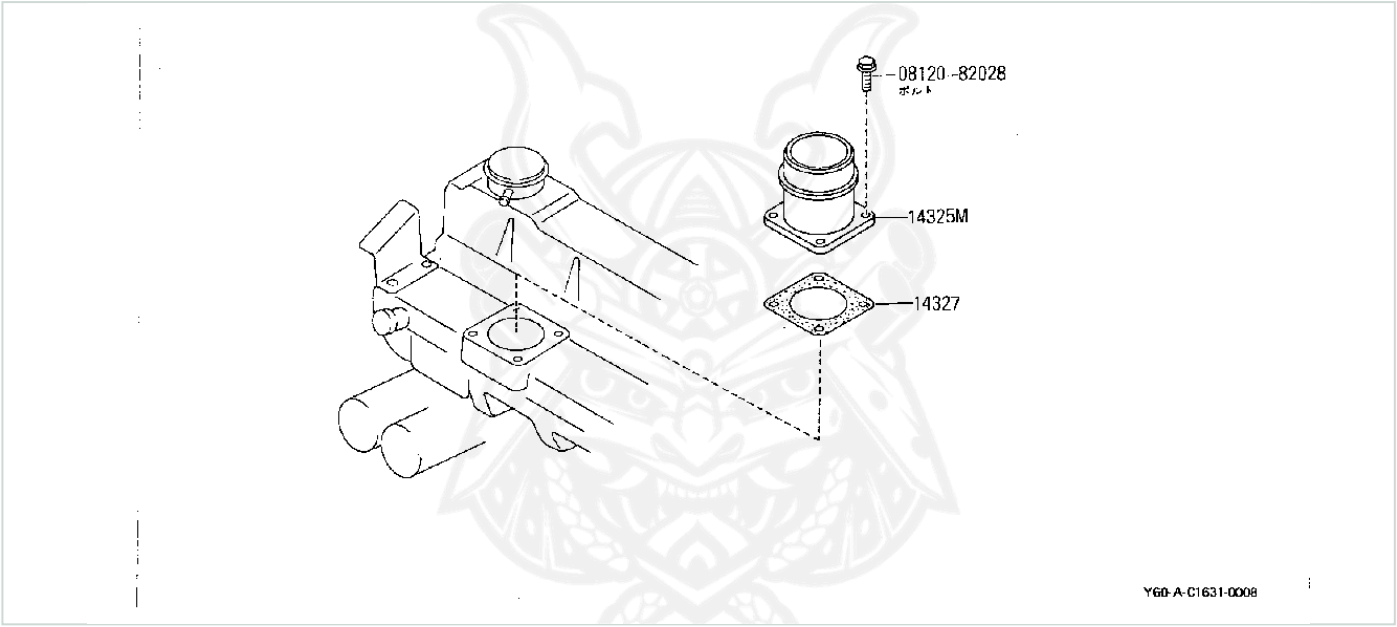

Part Number رقم القطعة	Diagram Ref مرجع المخطط	Part Name اسم القطعة	Details التفاصيل	Qty الكمية
16575-06J01	14325M	Housing, Air Inlet هواء	Applicability: TD42 Model Year: 1987-11-01 -	1
14327-J6500	14327	Gasket, bench uryl وجه	Applicability: TD42 Model Year: 1987-10-01 -	1
08120-82028	0812082028	Unknown		

OTHERS .033
أخرى

WIRING HARNESS

https://www.nengun.com/oem/parts/323458/MiPwn5qAMfCfmoIwMfCfmpxHMjTwn5q9MDA18J-QiW9sZC1qcC0xMjgtRzI0LTAxLTAwNQ/Wiring+Harness/d40f3a8ab5c7940a

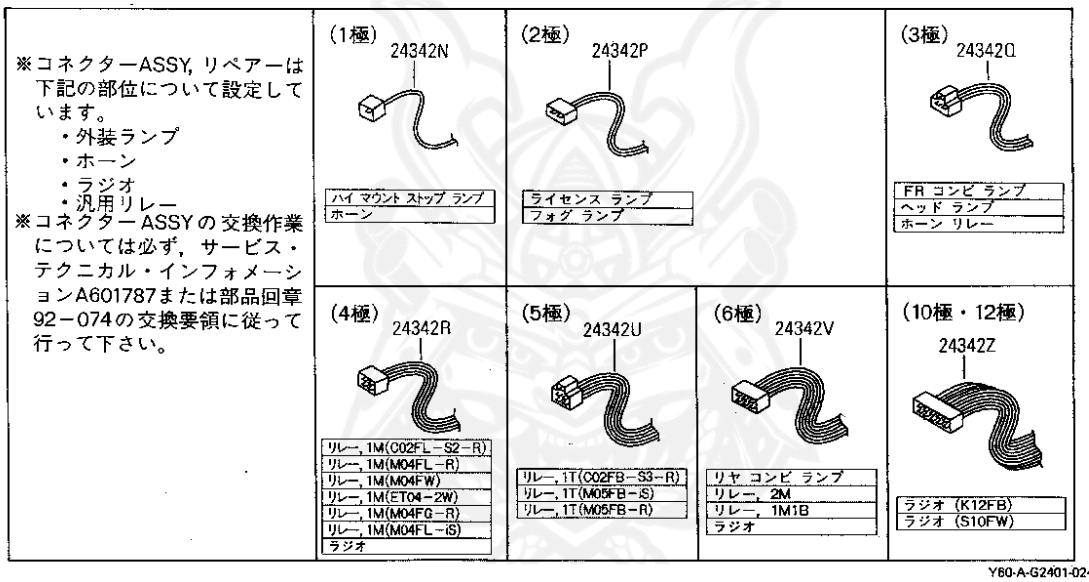

Part Number رقم القطعة	Diagram Ref مرجع المخطط	Part Name اسم القطعة	Details التفاصيل	Qty الكمية
B4341-0PFB1	24342N	Connector Assembly, Harness Repair 1p مجموعة	Applicability: ALL Specification: Horn (P01FB-A) Model Year: 1987-10-01 -	0
B4341-0SMW0	24342N	Connector Assembly, Hermetic Pipe 1p مجموعة ماسورة	Applicability: ALL Specification: High-mount stop lamp (S01MW) Model Year: 1987-10-01 -	0
B4342-0TFB0	24342P	Connector Assembly, Harness Repair 2p مجموعة	Applicability: ALL Specification: License Lamp (T02FB) Model Year: 1987-10-01 -	0
B4342-0ZFY0	24342P	Connector Assembly, Harness Repair 2P مجموعة	Applicability: ALL Specification: Fog Lamp (Z02FGY) Model Year: 1987-10-01 -	0
B4343-0MFW1	24342Q	Connector Assembly, Harness Repair 3p مجموعة	Applicability: ALL Specification: Horn relay (M03FW-R) Model Year: 1987-10-01 -	0
B4343-0QFB2	24342Q	Connector Assembly, Harness Repair 3P مجموعة	Applicability: ALL Specification: Head Lamp (Q03FB-T) Model Year: 1987-10-01 -	0
B4343-0ZFY0	24342Q	Connector Assembly, Harness Repair 3P مجموعة	Applicability: ALL Specification: Front Combination Lamp (Z03FGY) Model Year: 1987-10-01 -	0
B4344-ETFW0	24342R	Connector Assembly, Harness Repair 4P مجموعة	Applicability: ALL Specification: Relay, 1M (ET04-2W Blue 25230-C9990) Model Year: 1987-10-01 -	0
B4344-0SFW0	24342R	Connector Assembly, Harness Repair 4P مجموعة	Applicability: ALL Specification: Radio (S04FW) Model Year: 1987-10-01 -	0
B4344-0MFW0	24342R	Connector Assembly, Harness Repair 4P مجموعة	Applicability: ALL Specification: Relay, 1M (M04FW Blue 252 30-C9940) Model Year: 1987-10-01 -	0
B4344-0MFL1	24342R	Connector Assembly, Harness Repair 4P مجموعة	Applicability: ALL Specification: Relay, 1M (M04FL-R Blue 25230-C9970/80) Model Year: 1987-10-01 -	0
B4344-0MFL0	24342R	Connector Assembly, Harness Repair 4P مجموعة	Applicability: ALL Specification: Relay, 1M (M04FL-IS Blue 25230-79971/81) Model Year: 1987-10-01 -	0

Part Number رقم القطعة	Diagram Ref مرجع المخطط	Part Name اسم القطعة	Details التفاصيل	Qty الكمية
B4344-0MFG0	24342R	Connector Assembly, Harness Repair 4P مجموعة	Applicability: ALL Specification: Relay, 1M (M04FG-R Green 25230-C9965) Model Year: 1987-10-01 -	0
B4342-0CFL0	24342R	Connector Assembly, Harness Repair 4p مجموعة	Applicability: ALL Specification: Relay, 1M (C02FL-S2-R A O 25230-79900) Model Year: 1987-10-01 -	0
B4342-0CFB0	24342U	Connector Assembly, Harness Repair 5p مجموعة	Applicability: ALL Specification: Relay, 1T (C02FB-S3-R KU RO 25230-79910) Model Year: 1987-10-01 -	0
B4345-0MFB0	24342U	Connector Assembly, Harness Repair 5P مجموعة	Applicability: ALL Specification: Relay, 1T (M05FB-IS CR 25230-79962/72) Model Year: 1987-10-01 -	0
B4345-0MFB1	24342U	Connector Assembly, Harness Repair 5P مجموعة	Applicability: ALL Specification: Relay, 1T (M05FB-R Black 25230-C9961/71) Model Year: 1987-10-01 -	0
B4346-0CFW0	24342V	Harness Assembly, Harness Repair 6p مجموعة	Applicability: ALL Specification: Rear Combination Lamp (C 06FW) Model Year: 1987-10-01 -	0
B4346-0MFC0	24342V	Harness Assembly, Harness Repair 6P مجموعة	Applicability: ALL Specification: Relay, 2M (M06FBR-R) Model Year: 1987-10-01 -	0
B4346-0MFY0	24342V	Harness Assembly, Harness Repair 6P مجموعة	Applicability: ALL Specification: Relay, 1M1B (M06FGY-R) Model Year: 1987-10-01 -	0
B4346-0SFW0	24342V	Harness Assembly, Harness Repair 6P مجموعة	Applicability: ALL Specification: Radio (S06FW) Model Year: 1987-10-01 -	0
B4310-0SFW0	24342Z	Connector Assembly, Harness Repair مجموعة	Applicability: ALL Specification: Radio (S10FW) Model Year: 1987-10-01 -	0
B4312-0KFB0	24342Z	Connector Assembly, Harness Pitch مجموعة	Applicability: ALL Specification: Radio (K12FB) Model Year: 1987-10-01 -	0