SUNNYSKY

Specifications	X2212 KV1400		
Stator Diameter	定子外径	22mm	
Stator Thickness	定子厚度	12mm	
No. of Stator Arms	定子槽数	12	
No. of Rotor Poles	转子极数	14	
Motor KV	电机KV值	1400	
No-Load Current (A/10V)	空载电流	1A	
Motor Resistance	电机电阻	43mΩ	
Max Continuous Current	最大连续电流	37A/30s	
Max Continuous Power	最大连续功率	560W	
Weight	重量	57g	
Rotor Diameter	转子直径	27.5mm	
Body Length	电机长度（不含轴长）	30mm	
Max Lipo Cell	支持锂电节数	3-4S	
ESC	建议使用电调	30-40A	
Recommended Prop(inch)	推荐螺旋桨规格	APC9047	APC9045
		APC8038	APC7060
		APC8060	

AEROBATIC(适用特技机重量）750g（3S 9047\9045\8060）(4S 7060)
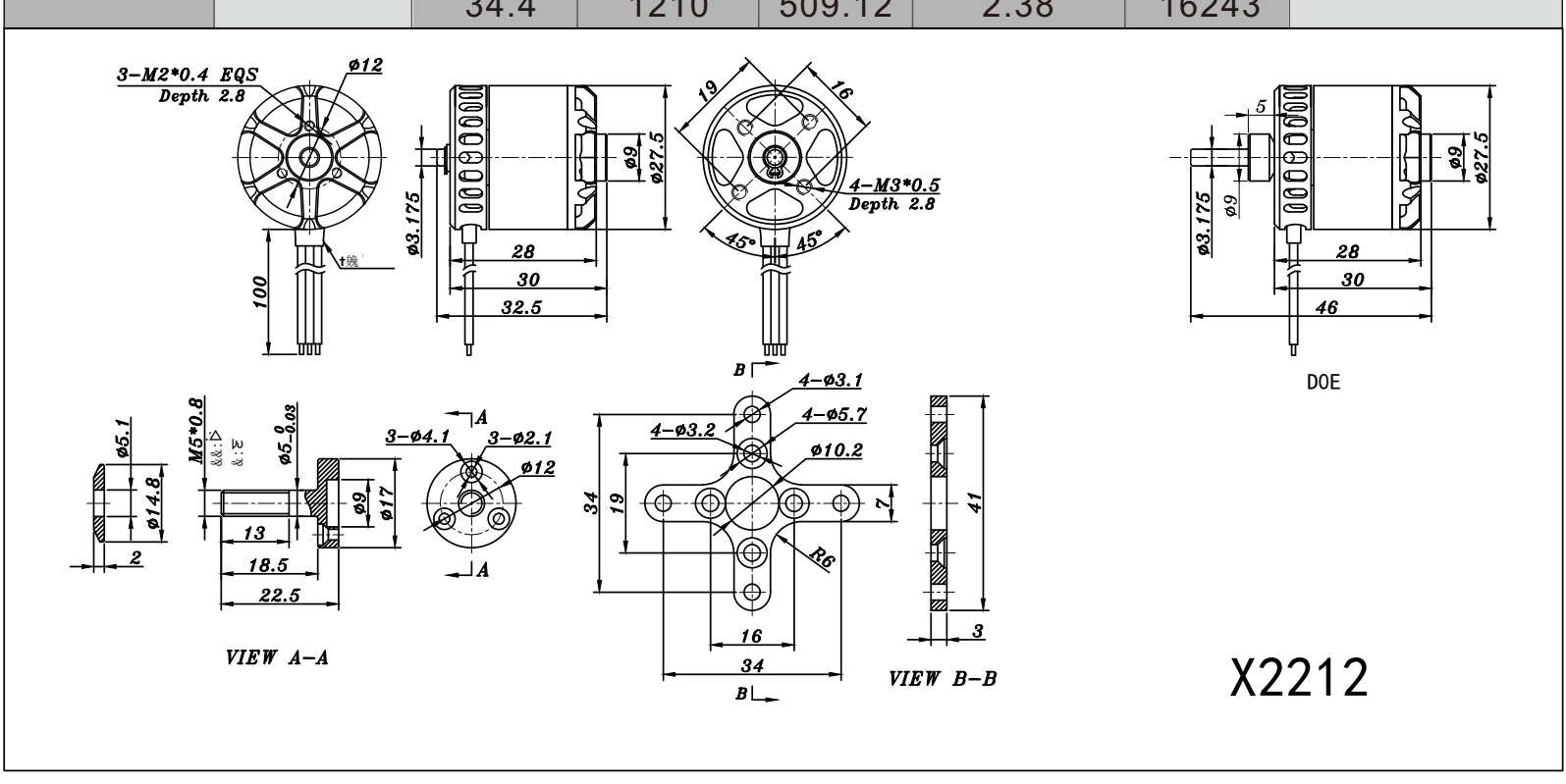
Prop (inch)	Voltage (V)	Amps (A)	Thrust (gf)	Watts (W)	Efficiency (g/W)	RPM	Load temperature in 100% throttle 全油门负载温度
APC9047	11.1	1	100	11.1	9.01	3244	77℃ 3min
		2.1	200	23.31	8.58	4590	
		3.6	300	39.96	7.51	5651	
		5.4	400	59.94	6.67	6509	
		7.3	500	81.03	6.17	7383	
		9.3	600	103.23	5.81	8061	
		11.3	700	125.43	5.58	8839	
		13.4	800	148.74	5.38	9476	
		16.1	900	178.71	5.04	10002	
		18.8	1000	208.68	4.79	10550	
		21.4	1100	237.54	4.63	11250	
		24.8	1200	275.28	4.36	11700	
		30.5	1380	338.55	4.08	12423	
APC8038	11.1	1	100	11.1	9.01	4002	66℃ 10min
		2.5	200	27.75	7.21	5595	
		4.1	300	45.51	6.59	6683	
		5.8	400	64.38	6.21	7620	
		7.6	500	84.36	5.93	8404	
		9.9	600	109.89	5.46	9145	
		12.3	700	136.53	5.13	9798	
		15	800	166.5	4.80	10389	
		18	900	199.8	4.50	10992	
		20.4	1000	226.44	4.42	11503	
		23.8	1100	264.18	4.16	11963	
		28	1230	310.8	3.96	12455	
APC9045	11.1	1	100	11.1	9.01	3340	75℃ 3min
		2.2	200	24.42	8.19	4705	
		3.8	300	42.18	7.11	5795	
		5.5	400	61.05	6.55	6688	
		7.3	500	81.03	6.17	7419	
		9.4	600	104.34	5.75	8060	
		11.5	700	127.65	5.48	8774	
		14	800	155.4	5.15	9264	
		17	900	188.7	4.77	9796	
		19.8	1000	219.78	4.55	10286	
		22.8	1100	253.08	4.35	10710	
		26.4	1200	293.04	4.10	11152	
		29.7	1300	329.67	3.94	11600	
		31.8	1440	352.98	4.08	12100	
APC8060	11.1	1.2	100	13.32	7.51	3890	65℃ 10min
		2.9	200	32.19	6.21	5456	
		5	300	55.5	5.41	6606	
		7.2	400	79.92	5.01	7564	
		9.3	500	103.23	4.84	8340	
		12	600	133.2	4.50	9142	
		15.9	700	176.49	3.97	9820	
		20.4	800	226.44	3.53	10425	
		25.6	900	284.16	3.17	11027	
		30.2	1050	335.22	3.13	12025	
APC7060	11.1	1.7	100	18.87	5.30	4957	71℃ 1min30s
		3.7	200	41.07	4.87	6990	
		6.3	300	69.93	4.29	8444	
		8.8	400	97.68	4.10	9731	
		12	500	133.2	3.75	10895	
		15.9	600	176.49	3.40	11826	
		21.3	750	236.43	3.17	13244	
	14.8	1.3	100	19.24	5.20	4932	
		2.8	200	41.44	4.83	6995	
		4.7	300	69.56	4.31	8481	
		6.7	400	99.16	4.03	9772	
		9	500	133.2	3.75	10878	
		11.8	600	174.64	3.44	11848	
		14.6	700	216.08	3.24	12964	
		18.3	800	270.84	2.95	13774	
		22.2	900	328.56	2.74	14584	
		25.9	1000	383.32	2.61	15238	
		30.6	1100	452.88	2.43	16371	
		34.4	1210	509.12	2.38	16243