# HUMAN DETECTION ROBOT

by


| | |
|---|---|
| ASHUTOSH PANDEY | 18BLC1067 |
| PATEL DEVARSHI | 18BLC1068 |
| SIDDHANT THAKUR | 18BLC1113 |
| SHAURYA GUPTA | 18BLC1092 |


A project report submitted to

**Prof. V. PRAKASH**

**SCHOOL OF ELECTRONICS ENGINEERING**

in partial fulfilment of the requirements for the course of

**ECE4003-EMBEDDED SYSTEM DESIGN**

in

**B. Tech. ELECTRONICS AND COMPUTER ENGINEERING**


VIT®
Vellore Institute of Technology
(Deemed to be University under section 3 of UGC Act, 1956)

**Vandalur – Kelambakkam Road**

**Chennai – 600127**


**NOVEMBER 2020**

## BONAFIDE CERTIFICATE

Certified that this project report entitled "**HUMAN DETECTION ROBOT"** is a bonafide work of **ASHUTOSH PANDEY-18BLC1067, PATEL DEVARSHI-18BLC1068, SHAURYA GUPTA-18BLC1092 and SIDDHANT THAKUR – 18BLC1113 who** carried out the Project work under my supervision and guidance for **ECE4003-EMBEDDED SYSTEM DESIGN**

**PROF. V. PRAKASH**

Associate Professor

School of Electronics Engineering (SENSE),

VIT University, Chennai

Chennai – 600 127.

# ABSTRACT

With advancement in technology and embedded systems, the world is being introduced with new and magical innovations that can create wonders and help the mankind on a large scale. Embedded systems are an integral part of our world today and daily life can come to a halt if they don't work in a smooth manner. Now, these embedded systems and devices are not limited to just making our home or cities smart or playing some music etc. but also, they can be and are being used to help the humans in a better way. this project aims to develop one of those ways and make great changes when it comes to use of embedded systems. This project aims to give a practical design, to build a human detection robot which will be controlled by an operator in areas affected by natural calamities, like an earthquake or flood. Detection of human in appropriate time is very important in such situations and can be done using this robot. Thus it can aid rescue missions in a great way.

# ACKNOWLEDGEMENT

We wish to express our sincere thanks and deep sense of gratitude to our project guide, **Prof. V. PRAKASH,** Associate Professor, School of Electronics Engineering, for her consistent encouragement and valuable guidance offered to us in a pleasant manner throughout the course of the project work.

We are extremely grateful to **Dr. Sivasubramanian. A,** Dean of School of Electronics Engineering, VIT Chennai, for extending the facilities of the School towards our project and for his unstinting support.

We express our thanks to our Head of the Department **Dr. THIRUPURASUNDARI** for his support throughout the course of this project.

We also take this opportunity to thank all the faculty of the School for their support and their wisdom imparted to us throughout the course.

We thank our parents, family, and friends for bearing with us throughout the course of our project and for the opportunity they provided us in undergoing this course in such a prestigious institution.

**Ashutosh Pandey** **Patel Devarshi** **Shaurya Gupta** **Siddhant Thakur**

# TABLE OF CONTENTS


| SERIAL NO. | | TITLE | PAGE NO. |
|---|---|---|---|
| | | ABSTRACT | 3 |
| | | ACKNOWLEDGEMENT | 4 |
| 1 | | INTRODUCTION | |
| | 1.1 | OBJECTIVES AND GOALS | 6 |
| | 1.2 | APPLICATIONS | 6 |
| | 1.3 | FEATURES | 7 |
| 2 | | DESIGN | |
| | 2.1 | BLOCK DIAGRAM | 8 |
| | 2.2 | HARDWARE ANALYSIS | 10 |
| 3 | 3.1 | SOFTWARE –CODING AND ANALYSIS (SNAPSHOTS OF CODING AND RESULTS) | 13 |
| 4 | | CONCLUSION AND FUTURE WORK | |
| | 4.1 | RESULT, CONCLUSION AND INFERENCE | 18 |
| | 4.2 | FUTURE WORK COST | 20 |
| | | REFERENCES | 23 |
| | | BIO DATA | |

# 1. INTRODUCTION

The earth has been revolving around sun for billions of years and with time, it has evolved for providing life to the species. The earth usually keeps a balanced environment for the inhabitants but due to human interference with nature and environment and also due to some other factors, earth witnesses some natural calamities. These calamities directly affect the lives of people in those areas. Humans have made advancements to rescue people stuck at those areas during a calamity but as we know there is scope of improvement in every field and since this scenario is a matter of lives, proper advancements are necessary from time to time. Now. Even though rescue teams are well equipped with skills to rescue people stuck but being human, eventually there are chances of mistakes and these mistakes can be dangerous. Now, our project, 'Human detection robot' tries to reduce some errors and to detect humans at those places where the rescue team can't go physically. This robot aids the rescue mission.

## 1.1 OBJECTIVES AND GOALS

-Human detection : The robot can move according to the inputs given by operator and detect the presence of human.

-Controlled by an operator from some distance: An operator operates the robot from some distance using a joystick or a keypad and give functions for the mobility.

-Detect humans trapped during earthquakes or other natural disasters. And send an alert as a feedback to the operator.

-Make it accurate, easily movable and reduce the delay to the least possible value.

-The human should be notified of the help he/she is receiving through a buzzer on the robot.

## 1.2 APPLICATIONS:

- Can be used for any rescue mission under cases of natural calamities.
- Can Detect Humans in any weather conditions and even in adverse environments.
- Can be implemented in rescue, medic or even military for defence.
- No need for humans to personally go and check a place.
- Can be used in situations like war to get intel about enemy's army.
- Can be implemented in extraction or rescue of humans Trapped in difficult conditions.
- The main application that we based our project on, was to detect humans under debris at locations where some sort of disaster might has taken place.
- Home intrusion detection, an automated robot can be deployed which will do a complete surveillance of the house when the owner is not present. It would be cost efficient as the cost of multiple sensors would be reduced.
- A wireless camera can be fitted on the robot and then can be deployed on the battlefield of a war to gain useful intelligence from the opposing side.
- Human detection deployed with image processing can help in great effect in today's pandemic-stricken world, as it can be used to detect whether a human is wearing a mask.
- Human detection can also be employed into traffic cameras and drones, and with IOT based measures can be used to determine red corona zones.

## 1.3 FEATURES:

- Power Dissipation: As required by the microcontroller, motor and RF transmitter and receiver.
- Performance: There should be no delay between the user command and operation.
- Buzzer for alerting human.
- Rubber padded wheels for smooth movement.
- Can implement LCD as well. (optional)

- Well build quality to operate in any weather condition.
- Range: Should operate well within the range of up to 100 meters.
- Dip switch type function for the remote controller which sends the command decided for the respective direction.
- Transmission and receiver capability to receive the user command and operate.

- Sensor to detect human response.
- A buzzer connected to the robot to create sound to alert the human detected.
- Rubber padded wheels for withstanding rough terrain operations.
- Antenna to increase range of operation.
- LED is also a choice we can go for along with the buzzer.

- Carbon fibre body to withstand high temperature.
  High Temperature withstanding choice

# 2. DESIGN

## 2.1 BLOCK DIAGRAM :

### 2.1.1 : OVERALL SYSTEM DESIGN

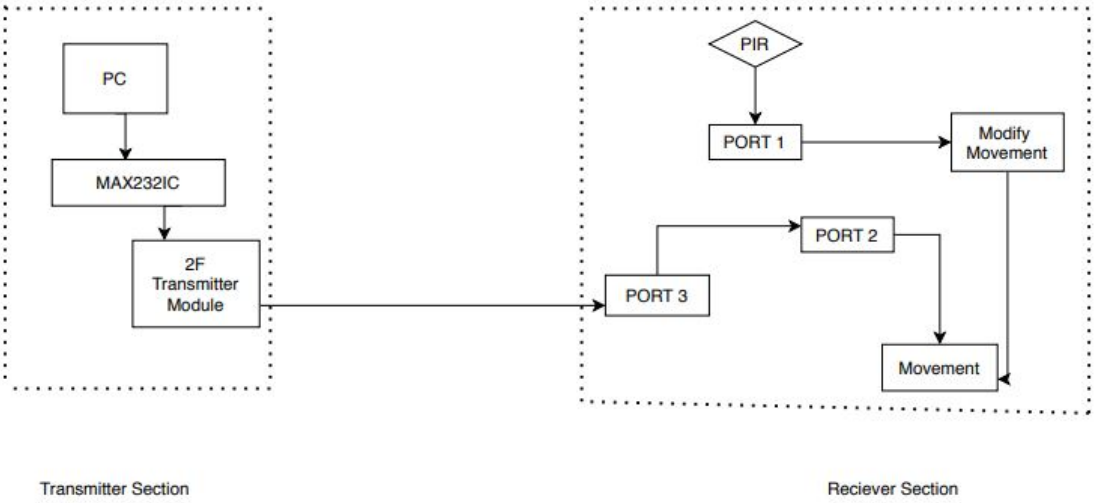


### 2.1.2: HARDWARE:

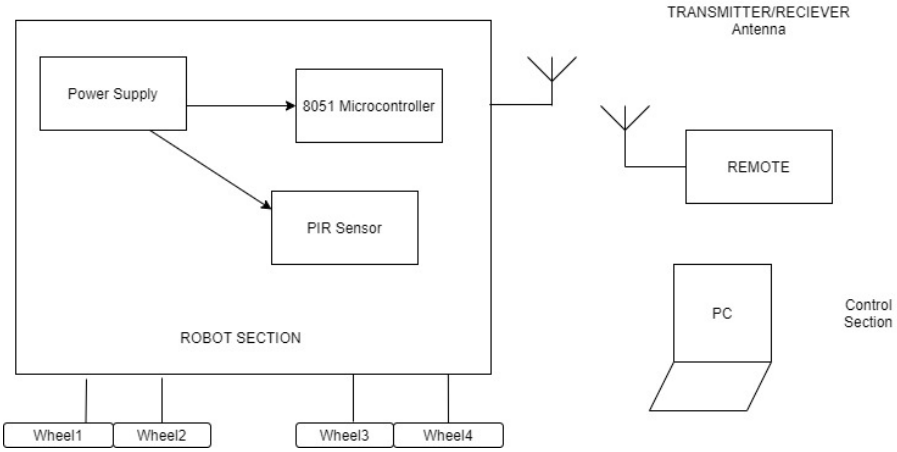


### 2.1.3: SOFTWARE:

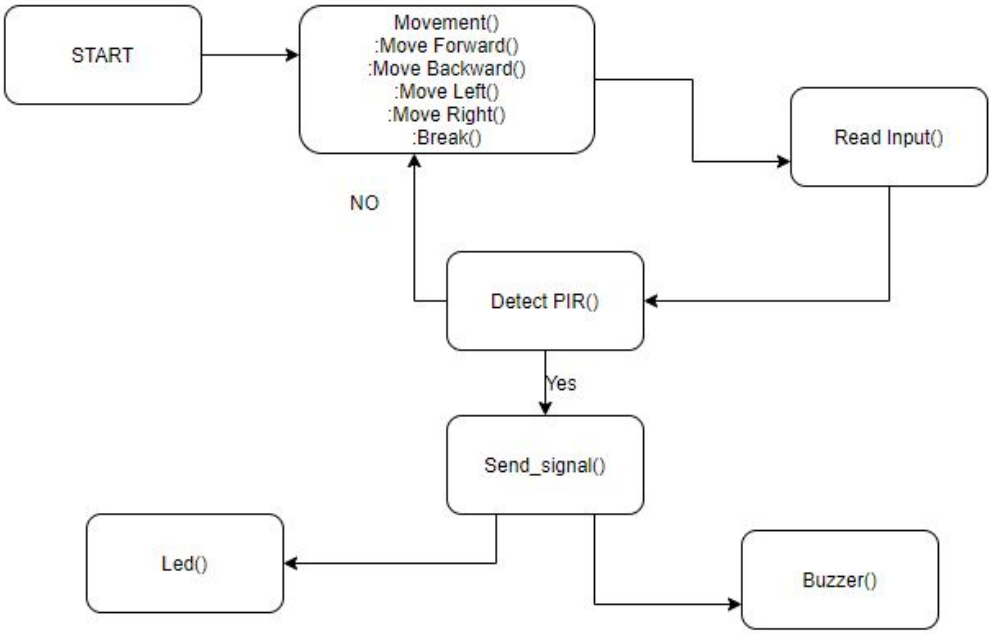


## 2.1.4 PCB LAYOUT:

**What is PCB?**

A printed circuit board (PCB) mechanically supports and electrically connects electrical or electronic components using conductive tracks, pads and other features etched from one or more sheet layers of copper laminated onto and/or between sheet layers of a non-conductive substrate. Components are generally soldered onto the PCB to both electrically connect and mechanically fasten them.

**Transmitter side**

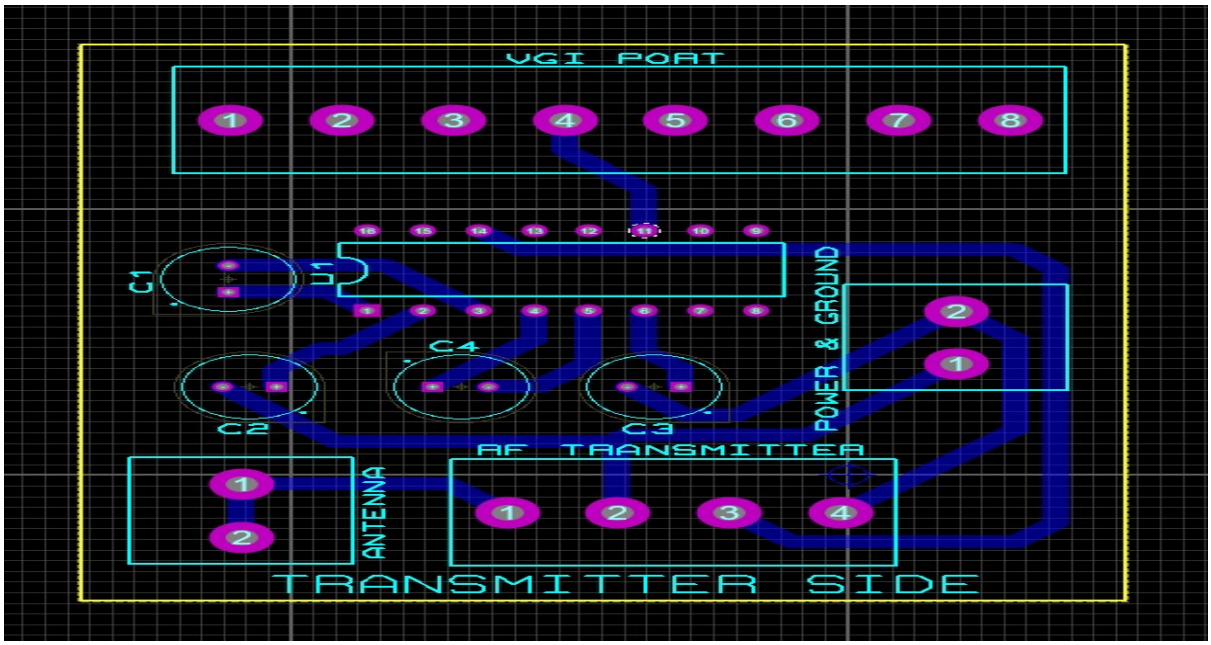

In this above design, Blue wire connection indicates the below the board wire connection. The DB9 connector shown by VGI port and there is RF Transmitter Module to transmit via antenna. The signal to RF Transmitter module comes through MAX232 IC connected with Capacitor. All components are given power supply and are grounded.

**Receiver side:**

In the design it has dual wiring, one above the circuit (red wire) and one below the circuit (blue wire). This will lead to a compact design which is helpful because it will on robot side which has to keep moving. It contains RF receiver module which receive signal and pass on to microcontroller. Then Microcontroller controlled motor and wheels of robot to lead to movement**.**

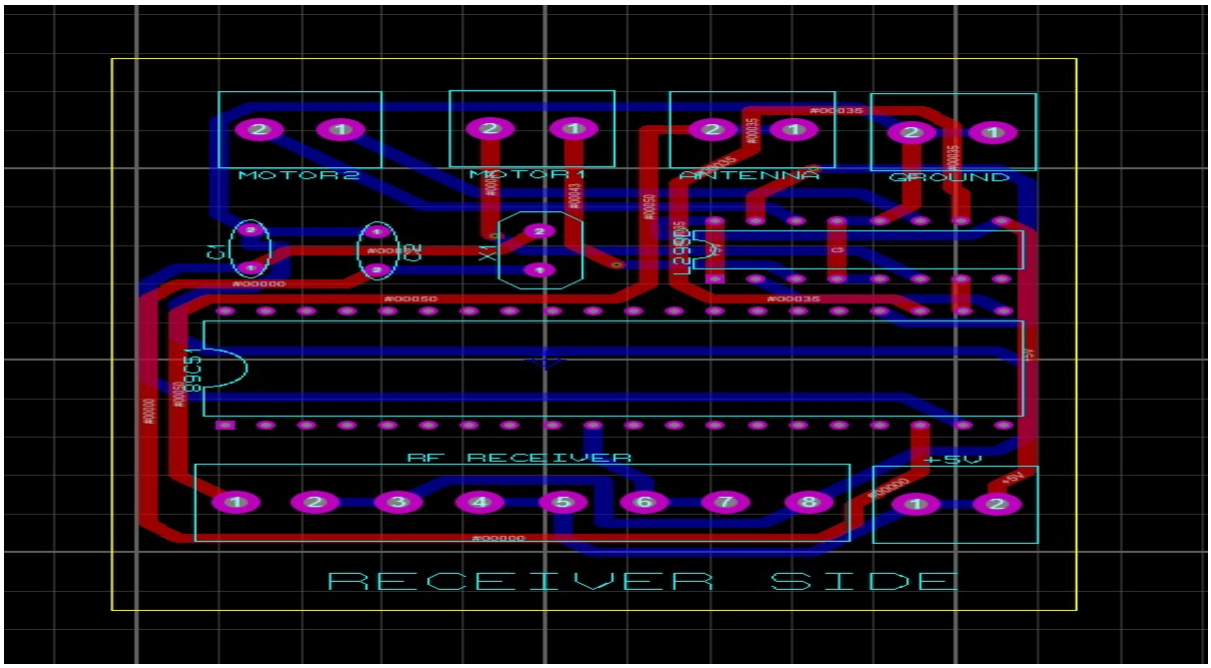

## 2.2 HARDWARE ANALYSIS:

**Transmitter section:**

1. PC, RF Transmitter which will transmit user inputs to the robot.

2. MAX232 makes the input from the pc compatible with RF transmitter module.

3. DB9 Connector: Designed to work with social interference for keyboard, joystick etc.

**Receiver section:**

1. AT89C51 MICROCONTROLLER for processing the inout.

2. L293"D" motor drive IC

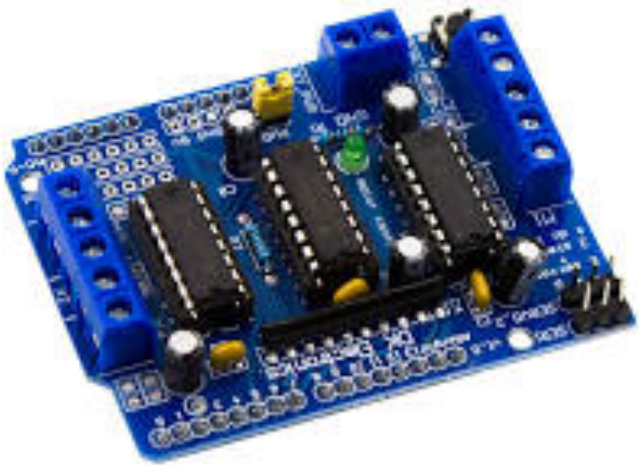

3. RF receiver module.

4. Motors for the bot mobility.

5. PIR sensor for human detection.

# 3.SOFTWARE

## 3.1 SOFTWARE SCREENSHOT

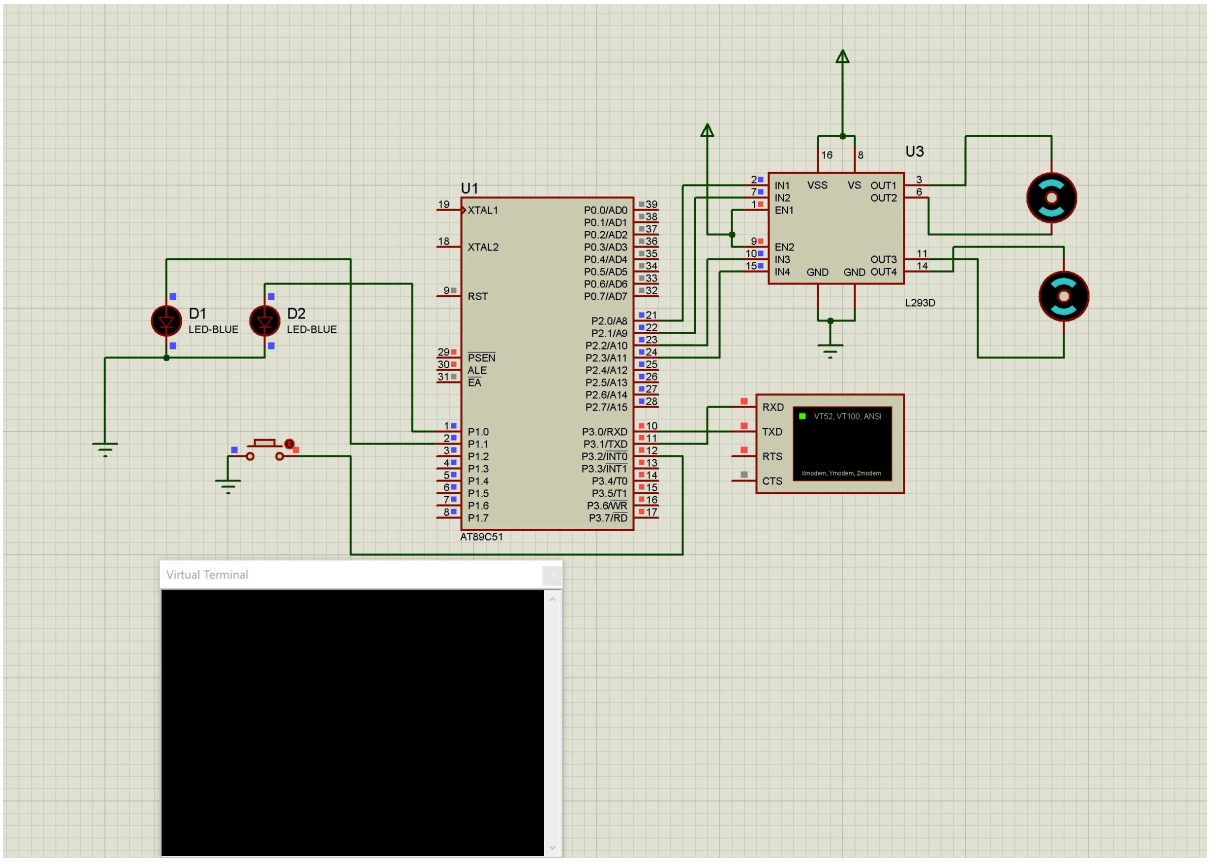


## 3.2 SCHEMATIC DIAGRAM :

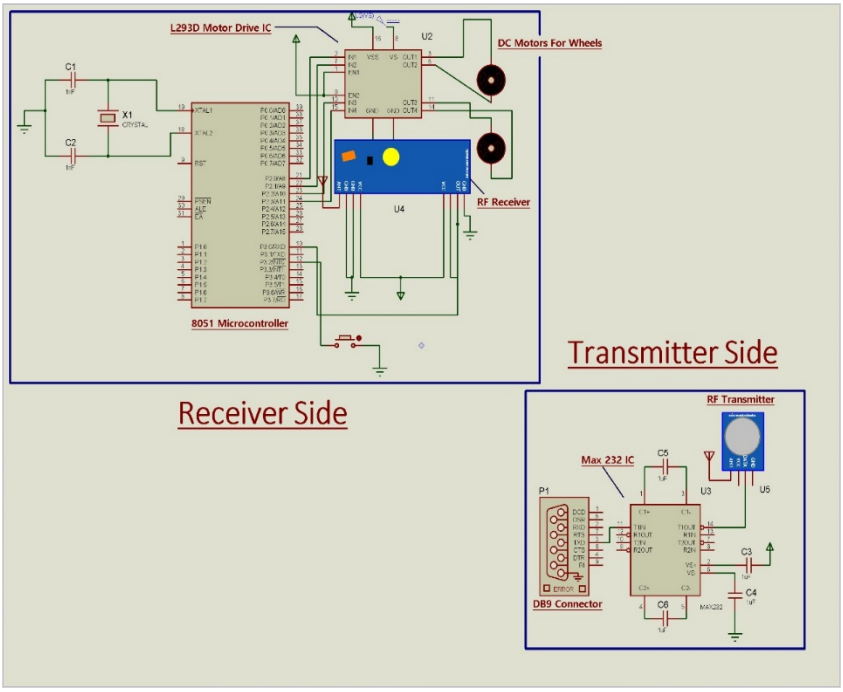

## 3.3 SOFTWARE COMPONENTS:

3.3.1.1 Move forward(): to move the robot forward.
3.3.1.2 Move backward (): to move the robot backward.
3.3.1.3 Move left (): to move the robot left.
3.3.1.4 Move Right (): to move the robot right.
3.3.1.5 Break(): To stop the robot.
3.3.1.6 Detect PIR(): To monitor the PIR sensor and detect when it is high.
3.3.1.7 Read Input(): Read the user input from a virtual terminal.

## 3.4 CODE:

```
#include<stdio.h>
#include<reg51.h>

sbit pir = P3^2;

void extint0() interrupt 0
{
  P2=0x00;
  P1=0xFF;
}


void main(void)
  {
unsigned char a;
pir=1;
P1 = 0x00;
  IE=0x81;
P1 = 0X00;
```

```
P2 = 0x00;
  TMOD = 0x20;
TH1 = 0xFd;
SCON = 0x50;
TR1 = 1;
 while(1)
 {
while(RI==0);
  a = SBUF;
RI = 0;
P1 = 0x00;
if(a =='f')
{
SBUF = a;
while(TI == 0);
TI = 0;
P2=0x09;
}
else if(a=='b')
{   SBUF = a;
while(TI == 0);
TI = 0;
P2=0x06;
}

else if(a=='l')
{   SBUF = a;
while(TI == 0);
TI = 0;
P2=0x08;
     }

     else if(a=='r')
{   SBUF = a;
while(TI == 0);
TI = 0;
P2=0x01;
```

```
        }
else if(a=='s')
{   SBUF = a;
while(TI == 0);
TI = 0;
P2=0x00;
        }
}
}
```

## 3.5 Resulting Snapshots:

**Backwards:**

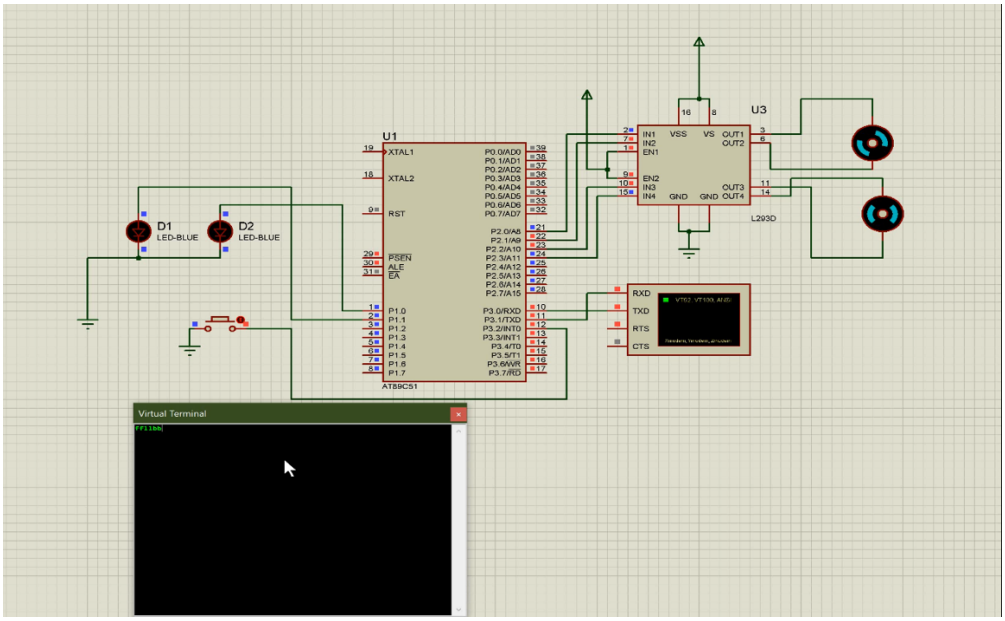


**Right:**

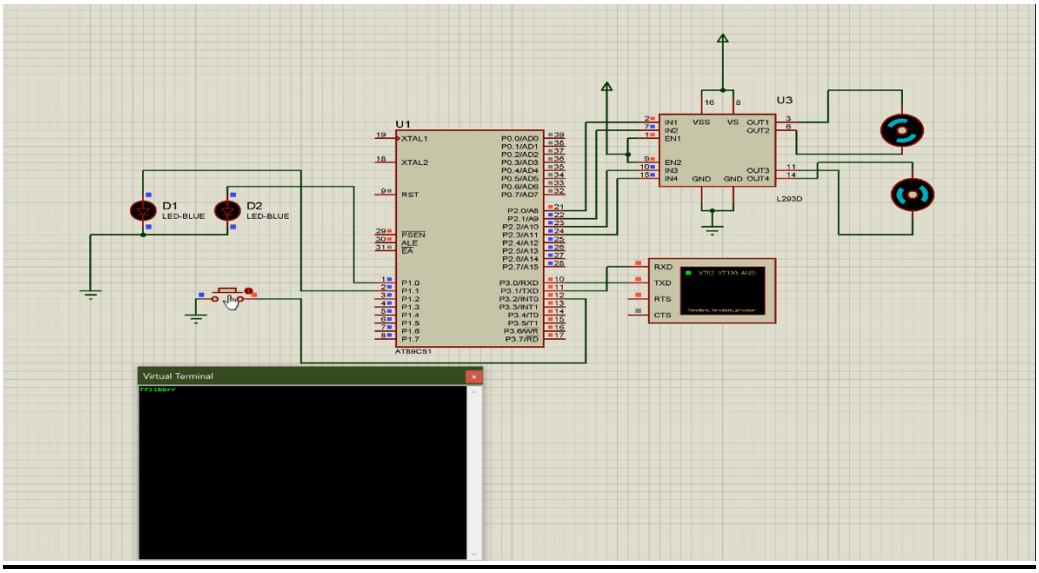

# LEFT:

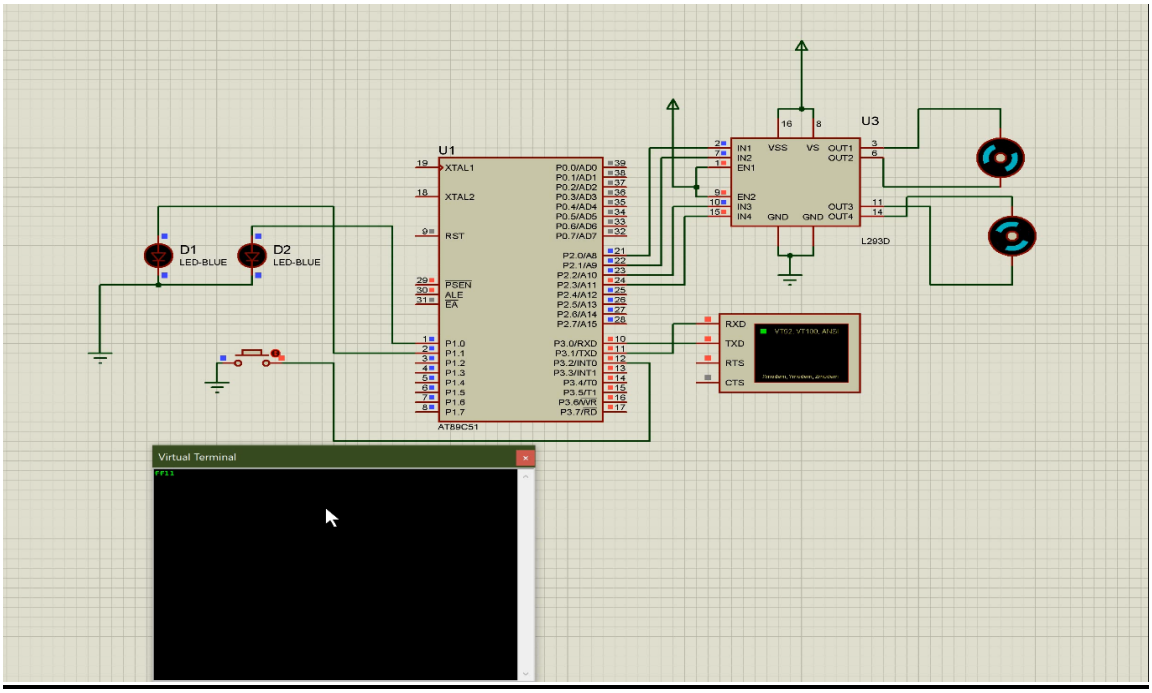


# Forward:

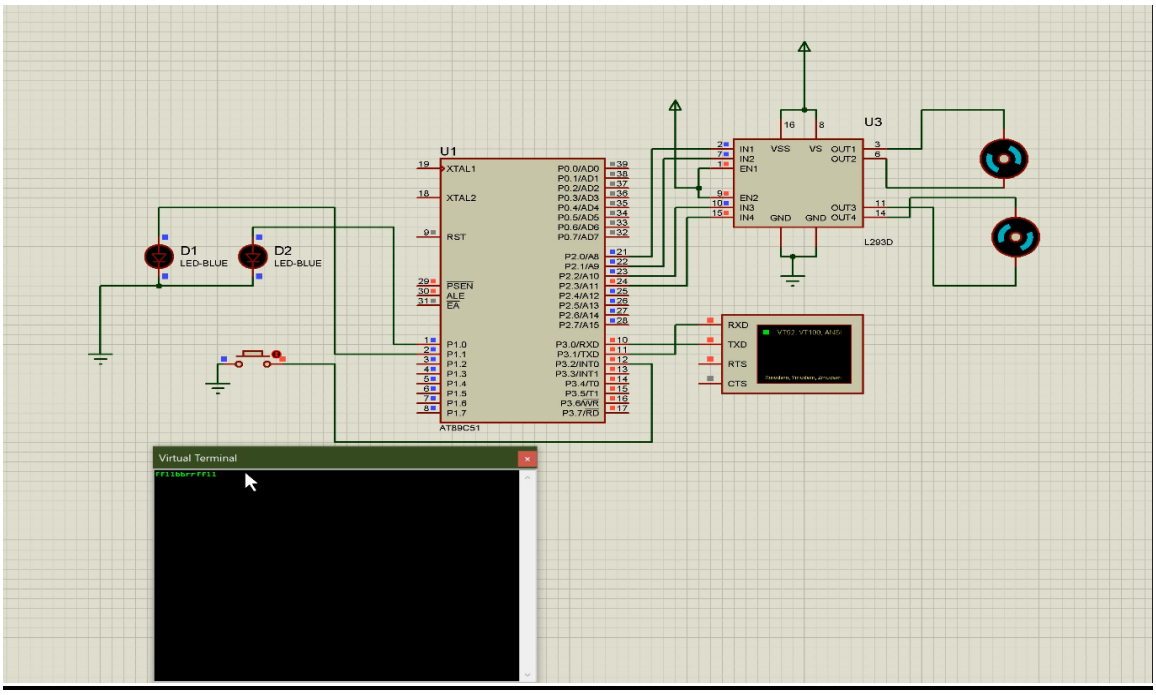

# 4. CONCLUSION AND FUTURE WORK

## 4.1 RESULT:

> A human detection robot which can be used during rescue operations in case of natural calamities.

>Robot will be controlled by an operator.

>It will roam around a location and notify if it detects a human.

> It can withstand adverse environmental conditions.

### 4.1.2 INFERENCE:

From the conducted procedure we infer that basic implementation of Human Detection Robot Using software and hardware implementation . It can be implemented using above stated embedded design process with the inherent requirements ,specification and function stated above.
The following is basic embedded product pertaining to Human Detection Robot and there are several possible upgrades that can be done over the proposed. This system can be scaled into various realms of IoT and electronics.

1. Following upgraded using different processors and controller
2. Some embedded systems can be upgrade can be upgraded using powerful processer and communication modules ,data collection procedures can be setup which can be analyzed using thE cloud and using Machine Learning techniques human detection mechanism can be sophisticated significantly.
3. Out proposed model will serve as basic building block for all the aforementioned upgrades to develop a more refined and accurate Human Detection Robot.

### 4.1.3 CONCLUSION:

Many intelligent monitoring strategies were developed to detect the life in the disaster environment. The development of a system dor human detection in the disaster environments is attempted. The Human Detection robot was designed with PIR sensor, which is used to detect the human in disaster environment and also for detecting the objects. The control system was designed using single chip microcontroller 8051 channel for controlling the motors, so that it can make Human Detection robot to Move. C programming was implemented for the movement of the Human Detection robot. To communicate with the Human Detection robot Radio Frequency transmitter and receiver module is used. When the Robot finds a human it can notify the users by producing continuous beeps. The Robot can be modified further by attaching a camera where the image of the human can be notified.

## 4.2 FUTURE WORK:

4.2.1 This Human Detection robot can be improved by using high range sensors (Laser, ultrasound or powerful thermal cameras), GPS, and motors of high capacity. Long distance telecommunication protocols will be also proposed in any future version of this robot. Our final goal is to develop a full autonomous rescue robot.

4.2.2 Internet of Things (IoT) technology has attracted lots of attention over the years, due to its applicability across the various domains. In particular, an IoT-based robot with artificial intelligence may be utilized in various fields of surveillance. In addition, photos taken by Human detection robot's camera can be compared with stored images of normal state, abnormal state. If an abnormal status is detected, the person/operator can receives an alarm via a smart phone. In the case of image context processing it is useful to apply convolutional neural network (CNN)-based machine learning (ML), which is introduced for the precise detection and recognition of images or patterns, and from which can be expected a high performance of recognition

4.2.3 Embedded smart cameras are stand-alone units that combine sensing and processing on a single embedded platform. They allow flexibility in camera placement and provide mobility without being dependent on wired links. Since embedded smart cameras have very limited processing power, memory and energy, the challenge becomes even bigger. As a possible upgrade for future work a human detection robot using an embedded smart camera mounted on it. We employ a histogram of oriented gradients (HOG) for detection and present the performance results obtained in these resource-constrained environments. An example application is patrolling hallways in a building to detect people.

## 4.3 **Cost**:

| COST ANALYSIS | | |
|---|---|---|
| Category | Items | Price |
| Robot Body | 4-Wheeled Aluminium Chassis | ₹450.00 |
| | Carbon Fiber Customized Sheet | ₹2,500.00 |
| | Rubber padded wheels x4 | ₹1,000.00 |
| | Piezo Buzzer x2 | ₹50.00 |
| | High ranged RF Antenna | ₹1,121.00 |
| | 12V 8xAA Battery Clip | ₹60.00 |
| | | |
| Hardware Components | RF Transmitter Receiver Module | ₹120.00 |
| | MAX232 Module with DB9 | ₹88.00 |
| | AT89C51 | ₹107.00 |
| | L293"D" motor drive IC | ₹100.00 |
| | 12V DC Motor x4 | ₹400.00 |
| | PCB Board | ₹1,000.00 |
| | PIR sensor | ₹90.00 |
| | Capacitors x7 | ₹60.00 |
| | Jumper cable set (240pcs) | ₹380.00 |
| | | ₹7,526.00 |
| Manufacturing cost | (including extra expenses) | ₹8,000.00 |

For Future Work Cost
(Units In Rupees ('₹')

- If using Iot model, We need an Wifi module to connect and raspberry pi instead of Microcontroller:

  Additonal Cost: 700/- (WIFI Module) + 2500 (Rasberry PI) + 2000/-(IOT Software Creation)= 5200/-

  Estimated New Product Cost: Old Product Cost + Additional Cost
  : 8000 + 5200
  : 13,200

- If we want include embedded smart Camera

  Additional Cost: 850/-(AI ESP32 Cam) + 500/- (Arduuino Uno)

  Estimated New Product Cost: Old Product Cost + Additional Cost
  : 8000 + 1350 Total : 9350

# REFERENCES


1. Human Detection Robot using PIR Sensors Saravana Kumar K , Priscilla P, Germiya K Jose , Balagopal G International Journal of Science, Engineering and Technology Research (IJSETR) LINK : https://d1wqtxts1xzle7.cloudfront.net/44502686/IJSETR-VOL-4-ISSUE-3-492-496.pdf?1460024344=&response-content-disposition=inline%3B+filename%3DIJSETR_VOL_4_ISSUE.pdf&Expires=1604219158&Signature=aPFkkV9~UxH4nDBibbK6gPgRa~B6uS8cLdnguTUzQp9pVFjClkdzjqAXK-5OH1ILR287I4qgz82I55K1kP3fqkOlFXivIyfJgtDbp9YwoBsOOxMHRtScc8D1K5RqxuMjdMQ8T5t9xrGjnLqfLC-3RRKWHgdWf19Qm3HrTsoD~HCRHqVu-kEI0tSz9nkaCaWVItrWnnPoG07C0gRubn9p0flPbLCgTcBSfvuvw9O~D51Y1L9Lkc-ZNbiH8~FegLhRuGqfUvNvKPkTR8H1s4i56HpYOj1mL0Mp4AIMaD-AbON7LxxsxzmvZl9VtwMJEyNoYY0UikY-Yin5L1pw9DBD2g__&Key-Pair-Id=APKAJLOHF5GGSLRBV4ZA
2. Multisensor-Based Human Detection and Tracking for Mobile Service Robots Publisher: IEEE AUTHORS: Nicola Bellotto; Huosheng Hu LINK: https://ieeexplore.ieee.org/abstract/document/4695975
3. Live Human Detection Robot JOURNAL: IJIRST –International Journal for Innovative Research in Science & Technology| Volume 1 | Issue 6 | November 2014 ISSN (online): 2349-6010 All rights reserved by www.ijirst.org 293 AUTHORS:(Asha Gupta Nidhee Panchal BE student Electronics & Communication Engineering Department BE student Electronics & Communication Engineering Department Sigma Institute Of Engineering, Gujarat Technological University, Gujarat, India Sigma Institute Of Engineering, Gujarat Technological University, Gujarat, India Dhruti Desai Divya Dangi BE student Electronics & Communication Engineering Department BE student Electronics & Communication Engineering Department Sigma Institute Of Engineering, Gujarat Technological University, Gujarat, India Sigma Institute Of Engineering, Gujarat Technological University, Gujarat, India Mr. Viral Patel Assistant Professor Electronics & Communication Engineering Department Sigma Institute Of Engineering, Gujarat Technological University, Gujarat, India ) LINK: https://d1wqtxts1xzle7.cloudfront.net/36113916/IJIRSTV1I6029.pdf?1420104667=&response-content-disposition=inline%3B+filename%3DLive_Human_Detection_Robot.pdf&Expires=1604219464&Signature=gi3QX9TBn6hmBapYuGxGVFNv-BoYRsR1Z7UDzV4dePGd81wJdMP4yXg3oiBktX4KUbGe2CbcwybvORN5Gx57S8ysQeKVjFDdCj-DvRPDRxPzE0S8GFj4CmBRDCFltFtKbnta2MxYlkNHoAlSV2djXKdLGrtC5SgAFpPXmKZreWlzwWxUaP5Ql-2Oz1lPD6hHcM-V2wyjwuJLmwdPOHbv5Q-e5~DzltEli2tvDA1hwKd7RF~zypF7jY40qAaFgaUJjwwEw3NY~lnqyGIOjDFFNJs6XXRK~iw7MXl8wx7HHYnD-S5GLP1FNEBx0K~ZuQyhXzPoly1vWyoJkKB6aGkEbg__&Key-Pair-Id=APKAJLOHF5GGSLRBV4ZA

# BIODATA

Name :ASHUTOSH PANDEY

Mobile Number :8707844644

E-mail :ashutosh.pandey2018@vitstudent.ac.in

Permanent Address: Sant Kabir Nagar , Uttar Pradesh

Name : PATEL DEVARSHI

Mobile Number :9624081722

E-mail : pateldevarshi.n2018@vitstudent.ac.in

Permanent Address: Aanand , Gujrat

Name : SHAURYA GUPTA

Mobile Number :9818454088

E-mail : shauryagupta.2018@vitstudent.ac.in

Permanent Address: Pune, Maharashtra

Name : THAKUR SIDDHANT CHANDRAKANT

Mobile Number : 8412876533

E-mail : siddhant.thakur2018@vitstudent.ac.in

Permanent Address: Pune , Maharashtra