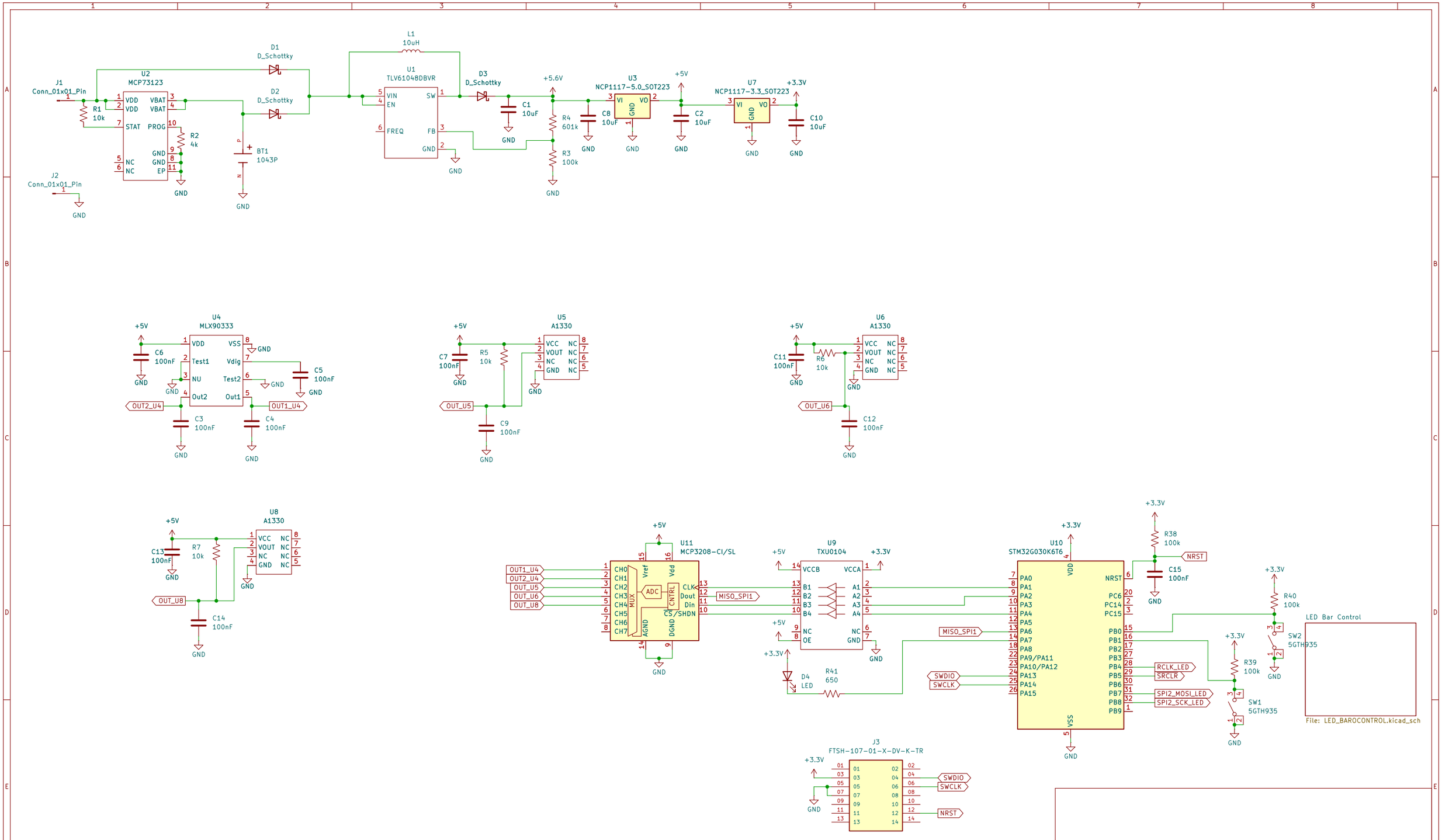

Sheet: /
File: Toy Design.kicad_sch

Title:

Size: B	Date:	Rev:
KiCad E.D.A. 10.0.1		Id: 1/2

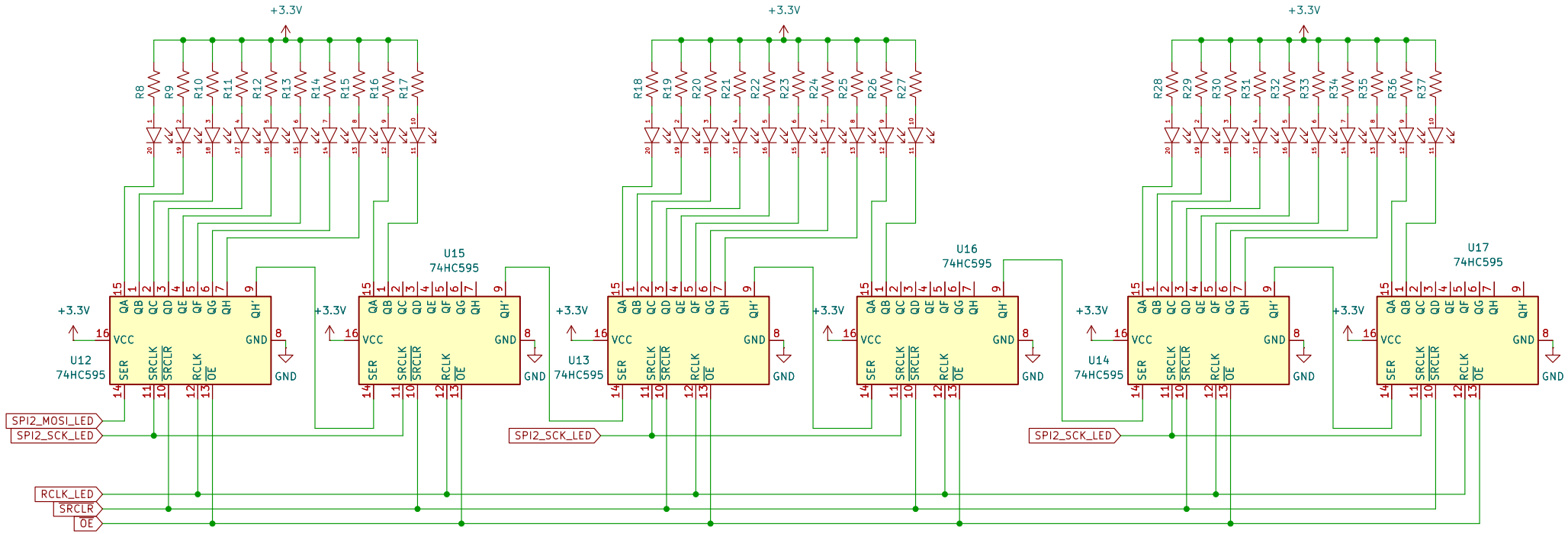

Sheet: /LED Bar Control/
File: LED_BAROCONTROL.kicad_sch

Title:

Size: A4	Date:	Rev:
KiCad E.D.A. 10.0.1		Id: 2/2