2025 IEEE International Conference on Systems, Man, and Cybernetics (SMC)
October 5-8, 2025. Vienna, Austria

A Novel Medical Image Reconstruction Framework for 3D Chest CT Based on a Single 2D Anteroposterior X-ray Image

Tao Tang[1], Wenjie Cai[1,2], Bin Yang[1], Jun Huang[1], Ying Zhou[3], Zhiqin Liu[1] and Qingfeng Wang[1,*]

2025 IEEE International Conference on Systems, Man, and Cybernetics (SMC) | 979-8-3315-3358-8/25/$31.00 ©2025 IEEE | DOI: 10.1109/SMC58881.2025.11342980

***Abstract*— X-rays are widely used in clinical practice due to their low radiation exposure and cost. However, 2D imaging can result in overlapping anatomical structures. In contrast, CT scans generate 3D images, effectively addressing this limitation. Nevertheless, CT scans also have drawbacks, such as high radiation, high cost, and inability to be implemented within ICU settings. In this paper, we propose the AP2CT-GAN framework, which aims to reconstruct chest CT images from a single anteroposterior chest X-ray. The framework incorporates the Feature Enhancement Connection (FEC) and the Feature Dimension Converter (FDC) to enhance critical features and capture global contextual information, along with the Dual-Consistency Loss function propose to ensure that the reconstructed CT images maintain a high level of structural and textural consistency with the ground truth. Experimental results demonstrate that AP2CT-GAN outperforms existing methods, offering a low-radiation, low-cost CT imaging solution with valuable potential applications in resource-limited regions and ICU settings.**

I. INTRODUCTION

X-ray and CT are medical imaging technologies, while X-ray is more widely used due to its lower radiation and cost. However, X-ray projects tissues onto a 2D plane, causing overlap, which makes it challenging for doctors to interpret images. In contrast, CT scans generate 3D images, effectively addressing X-ray's shortcomings. Nevertheless, CT scans also have limitations. High radiation poses health risks to pregnant women and children, and high costs limit availability in resource-limited regions. Moreover, ICU patients are often too unstable to move, making CT scans difficult to perform.

Therefore, is it possible to reconstruct 3D CT image from a single 2D anteroposterior X-ray, thereby providing a low-radiation, low-cost imaging solution for resource-limited regions and ICUs, as illustrated in Fig. 1. In 1917, Johann Radon proposed Radon transform [1], which demonstrated the feasibility of reconstructing CT from X-ray data. Currently, CT image reconstruction methods are categorized into traditional and deep learning approaches.

Traditional methods include analytical and iterative reconstruction (IR), with filtered back projection (FBP) being a common analytical approach. FBP arranges multi-angle data into a sinogram, then applies filtering and back projection to produce CT images. Despite its simplicity, FBP is prone to streak artifacts when projections are insufficient, and various optimizations [2], [3] have yet to fully resolve this issue. Consequently, IR has gradually replaced FBP by iteratively adjusting to approximate consistency between projection data and the reconstructed image. For example, studies [4], [5] employed IR for reconstruction. Despite its advantages, IR still struggles to achieve stable solutions when projection data is severely under-sampled.

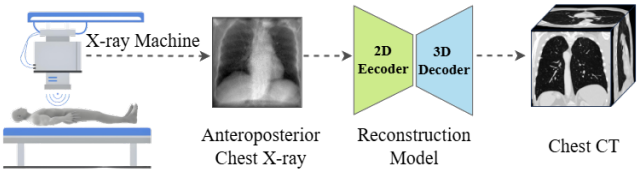

Fig. 1. An illustration of reconstructing chest CT images from a single anteroposterior X-ray image of the patient.

In recent years, deep learning methods [6]–[11] have been used to reconstruct CT from X-ray, overcoming the need for extensive data in traditional methods. For example, Shen et al. [12] proposed ReconNet to reconstruct CT images by learning the feature mapping between a single chest X-ray and a 3D CT image. Tan et al. [11], [13] proposed XctNet, a lightweight network and Semi-XctNet, a semi-supervised learning network for chest CT reconstruction. Moreover, Generative Adversarial Networks (GANs) are widely used in medical image reconstruction by learning the global mapping from source to target modality. For instance, Ying et al. [6] proposed X2CT-GAN, which combines Mean Squared Error (MSE) with adversarial loss for CT reconstruction. Huang et al. [7], inspired by BX2S-Net [8], proposed 3DSP-GAN to reduce cross-dimensional semantic gaps using a 3D-3D generator for CT reconstruction. Xing et al. [9] proposed DP-GAN, based on depthwise separable convolutions, for reconstructing CT images from X-rays.

However, these methods rely solely on pixel-wise loss functions (such as $\mathcal{L}_1 := |\cdot|_1$ and $\mathcal{L}_2 := |\cdot|_2$) [14] to optimize the network at the pixel level, without fully considering visual features and semantic information at the feature level. As a result, the reconstructed CT images tend to be overly smooth, lacking structural details and textures. Moreover, unlike previous approaches, our task relies on only a single chest X-ray for CT reconstruction. Due to the absence of complementary information from lateral views, the model needs to have a stronger ability to extract critical anatomical features and capture global contextual information.

Therefore, leveraging the unique adversarial mechanism

[1]School of Computer Science and Technology, Southwest University of Science and Technology, Mianyang, China.
[2]School of Computer Science and Technology, University of Science and Technology of China, Hefei, China.
[3]Department of Radiology, Mianyang Central Hospital, Mianyang, China.
*Corresponding author, Email: qfwang@swust.edu.cn.
This paper is supported by the construction project of the Fujiang Laboratory Nuclear Medicine Artificial Intelligence Research Center (No. 2023ZYDF074), This work was supported by the Postgraduate Innovation Fund Project of Southwest University of Science and Technology (Tao Tang was funded).

Authorized licensed use limited to: Netaji Subhas University of Technology New Delhi. Downloaded on April 21,2026 at 17:08:57 UTC from IEEE Xplore. Restrictions apply.

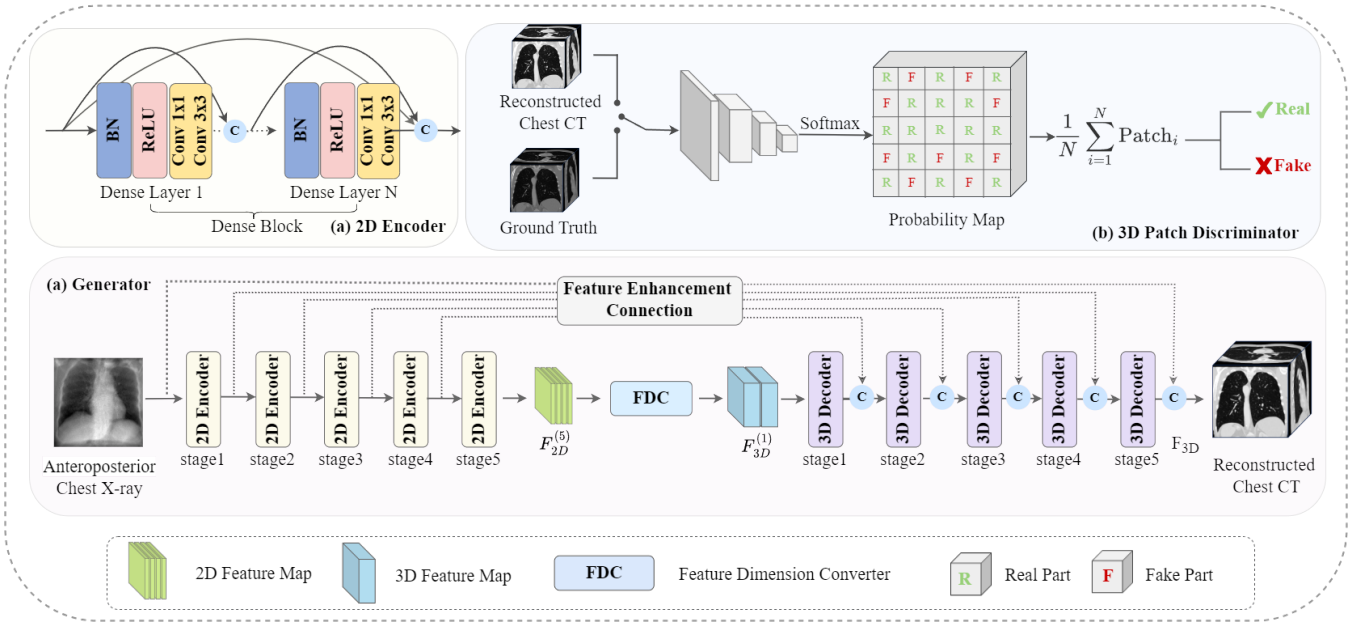

Fig. 2. Overview of the AP2CT-GAN framework. The model's generator consists of a 2D encoder with Dense Blocks, an FEC module, an FDC module, and a 3D decoder. A 128×128 anteroposterior chest X-ray is used as input to reconstruct a $128 \times 128 \times 128$ CT volume. The reconstructed CT and the ground truth CT are then fed into the 3D Patch discriminator for evaluation.

of GANs, we propose the AP2CT-GAN framework to reconstruct chest CT images from a single anteroposterior chest X-ray. Our main contributions are summarized as follows:

- We propose Feature Enhancement Connection (FEC) to reduce depth information loss from cross-dimensional reconstruction in CT and enhance critical feature extraction.
- We propose Feature Dimension Converter (FDC) to improve the model's ability to capture global contextual information in CT image reconstruction tasks.
- We propose a Dual-Consistency Loss, which imposes constraints at both the pixel level and the feature level to optimize the model's performance.

II. METHODS

The framework of AP2CT-GAN is illustrated in Fig. 2. The model aims to reconstruct chest CT images from a single anteroposterior chest X-ray. AP2CT-GAN consists of two main components: a generator for CT reconstruction and a discriminator to assess the output. The process involves the following five steps: (1) The input X-ray image is processed by a 2D encoder with Dense Blocks to extract 2D features; (2) the extracted features are transformed from 2D to 3D through the FDC module; (3) the 3D features are upsampled by a 3D decoder to restore resolution; (4) the features from the FEC are fused with the upsampled features; and (5) the CT output from the generator is fed into the discriminator for evaluation until the model reaches Nash equilibrium.

A. 2D to 3D Generator

1) Feature Enhancement Connection: The encoder and decoder of AP2CT-GAN operate in different dimensional spaces, leading to depth information loss. This contrasts with traditional reconstruction tasks, where both operate in either 2D or 3D spaces. Moreover, relying on a single anteroposterior X-ray for CT reconstruction lacks supplementary lateral X-ray information, making it more challenging for the model to capture critical anatomical features.

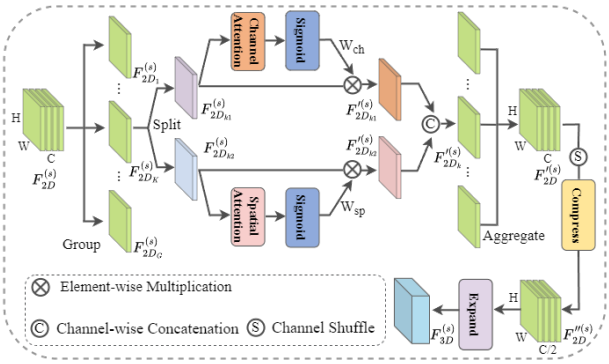

Fig. 3. Illustration of the Feature Enhancement Connection. The input F_{2D} is from each stage of the 2D encoder. Compress performs channel reduction through 2D convolution, and Expand transforms the 2D feature map into pseudo-3D for fusion with each stage of the 3D decoder output.

Therefore, to reduce depth information loss in CT reconstruction and enhance critical feature extraction, we designed the FEC, as illustrated in Fig. 3.

Specifically, the 2D feature map input to the FEC, denoted as $F_{2D}^{(s)} \in \mathbb{R}^{C \times H \times W}$, is generated by Dense Blocks at each stage, as illustrated in Fig. 2 (a). We then divide the channel dimension into G sub-features:

$$F_{2D}^{(s)} = [F_{2D_1}^{(s)}, \ldots, F_{2D_G}^{(s)}], F_{2D_k}^{(s)} \in \mathbb{R}^{\frac{C}{G} \times H \times W} \quad (1)$$

where s indicates the encoding stage of the generator.

To enhance important features and suppress unimportant

Authorized licensed use limited to: Netaji Subhas University of Technology New Delhi. Downloaded on April 21,2026 at 17:08:57 UTC from IEEE Xplore. Restrictions apply.

features, each $F_{2D_k}^{(s)}$ is further split into two branches along the channel dimension:

$$F_{2D_k}^{(s)} = [F_{2D_{k1}}^{(s)}, F_{2D_{k2}}^{(s)}], F_{2D_{k1}}^{(s)}, F_{2D_{k2}}^{(s)} \in \mathbb{R}^{\frac{C}{2G} \times H \times W} \quad (2)$$

Channel attention is then applied to the sub-feature $F_{2D_{k1}}^{(s)}$ to capture inter-channel relationships, enhancing critical features while suppressing irrelevant features. The resulting channel attention weight W_{ch} is element-wise multiplied with $F_{2D_{k1}}^{(s)}$ to produce the optimized feature map $F_{2D_{k1}}^{\prime(s)}$:

$$W_{ch} = \sigma(W_c \cdot \mathrm{GAP}(F_{2D_{k1}}^{(s)}) + b_c) \quad (3)$$

$$F_{2D_{k1}}^{\prime(s)} = F_{2D_{k1}}^{(s)} \odot W_{ch} \quad (4)$$

where σ represents the Sigmoid activation function, and GAP denotes Global Average Pooling. W_c and b_c are the learnable weight matrix and bias, respectively, with dimensions $W_c, b_c \in \mathbb{R}^{\frac{C}{2G} \times 1 \times 1}$. $\odot$ denotes element-wise multiplication.

Similarly, for sub-feature $F_{2D_{k2}}^{(s)}$, spatial attention weight W_{sp} is computed and applied to $F_{2D_{k2}}^{(s)}$ via element-wise multiplication, producing optimized feature map $F_{2D_{k2}}^{\prime(s)}$:

$$W_{sp} = \sigma(W_s \cdot \mathrm{GN}(F_{2D_{k2}}^{(s)}) + b_s) \quad (5)$$

$$F_{2D_{k2}}^{\prime(s)} = F_{2D_{k2}}^{(s)} \odot W_{sp} \quad (6)$$

where GN denotes the Group Normalization.

Subsequently, $F_{2D_{k1}}^{\prime(s)}$ and $F_{2D_{k2}}^{\prime(s)}$ are concatenated along the channel dimension, forming the feature map $F_{2D_k}^{\prime(s)}$:

$$F_{2D_k}^{\prime(s)} = [F_{2D_{k1}}^{\prime(s)}, F_{2D_{k2}}^{\prime(s)}], F_{2D_k}^{\prime(s)} \in \mathbb{R}^{\frac{C}{G} \times H \times W} \quad (7)$$

All sub-features $F_{2D_k}^{\prime(s)}$ $(k = 1, 2, \ldots, G)$ are aggregated along the channel dimension to obtain output feature map:

$$F_{2D}^{\prime(s)} = [F_{2D_1}^{\prime(s)}, F_{2D_2}^{\prime(s)}, \ldots, F_{2D_G}^{\prime(s)}], F_{2D}^{\prime(s)} \in \mathbb{R}^{C \times H \times W} \quad (8)$$

To enable information exchange between sub-features, the Channel Shuffle operator is applied to $F_{2D}^{\prime(s)}$. Subsequently, a convolution layer compresses the channels to generate $F_{2D}^{\prime\prime(s)}$, which is fused with the upsampled features from the 3D decoder. Finally, $F_{2D}^{\prime\prime(s)} \in \mathbb{R}^{\frac{C}{2} \times H \times W}$ is transformed into a pseudo-3D feature map $F_{3D}^{(s)}$:

$$F_{2D}^{\prime\prime(s)} = \mathrm{Conv}(\mathrm{ChannelShuffle}(F_{2D}^{\prime(s)})) \quad (9)$$

$$F_{3D}^{(s)} = \mathrm{ExpandDim}(F_{2D}^{\prime\prime(s)}), F_{3D}^{(s)} \in \mathbb{R}^{\frac{C}{2} \times D \times H \times W} \quad (10)$$

2) Feature Dimension Converter: In the task of CT reconstruction, integrating local and global contextual features is essential. When only convolutional operations are used for feature extraction, the model is limited by its fixed receptive field, capturing only local information. This limitation becomes particularly evident when handling complex heterogeneous tissue structures and rare pathological regions, where contextual information is crucial for accurately inferring the spatial distribution of tissue signals.

Therefore, to enhance the model's ability to capture global contextual information and achieve the transformation from 2D to 3D features, better adapting to the 3D spatial structure of CT images, we designed the Feature Dimension Converter (FDC), as illustrated in Fig. 4.

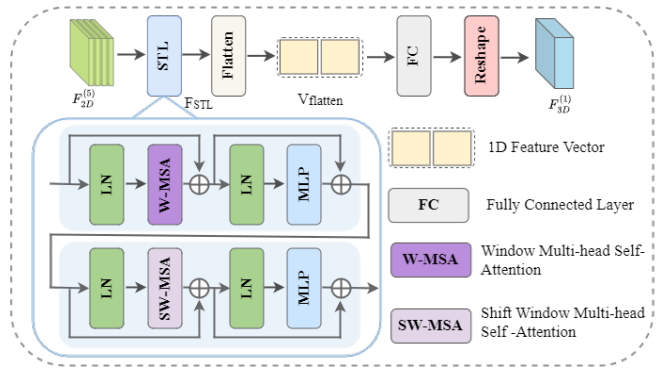

Fig. 4. Illustration of the Feature Dimension Converter. The input F_{2D} is from the last 2D encoder. STL represents the Swin Transformer layer, Flatten generates a 1D vector, and Reshape forms the final 3D feature map.

Specifically, during the encoding stage, the features F_{2D} generated by the last 2D encoder are first fed into the Swin Transformer Layer (STL). This process involves applying Layer Normalization (LayerNorm) to the input features, followed by a Window-based Multi-Head Self-Attention layer (W-MSA). Subsequently, global contextual information is further aggregated using the Sliding Window Multi-Head Self-Attention layer (SW-MSA), efficiently capturing and representing global features. The mapping between the input and output is as follows:

$$\hat{F}_{2D}^{(5)} = \mathrm{LayerNorm}(F_{2D}^{(5)}) \quad (11)$$

After computing all windows, the outputs from these windows are recombined to form $F_{W\text{-}MSA}$:

$$F_{W\text{-}MSA} = \text{Window-Concat}(\text{SoftMax}\left(\frac{QK^T}{\sqrt{d_k}}\right)V) \quad (12)$$

where $Q = \hat{F}_{2D}^{(5)} W_Q$, $K = \hat{F}_{2D}^{(5)} W_K$, and $V = \hat{F}_{2D}^{(5)} W_V$ represent the Query, Key, and Value matrices, respectively. W denotes the linear projection matrix, and d_k represents the dimension of the Key vector.

To enhance cross-window interaction, $F_{W\text{-}MSA}$ is divided using Sliding Windows (SW), and the outputs from all Sliding Windows are recombined to produce $F_{SW\text{-}MSA}$:

$$F_{SW\text{-}MSA} = \text{SW-Concat}(\text{SoftMax}\left(\frac{Q'K'^T}{\sqrt{d_k}}\right)V') \quad (13)$$

where similar to Equation (12), $Q' = F_{W\text{-}MSA} W_{Q'}$, $K' = F_{W\text{-}MSA} W_{K'}$, and $V' = F_{W\text{-}MSA} W_{V'}$ represent the Query, Key, and Value matrices, respectively.

To stabilize training, residual connections are used to add the input features and attention output, followed by normalization to produce the final output F_{STL}:

$$F_{\mathrm{STL}} = \mathrm{LayerNorm}\left(\hat{F}_{2D}^{(5)} + F_{SW\text{-}MSA}\right) \quad (14)$$

Finally, F_{STL} is flattened into a 1D vector V_{flatten} and reshaped into a 3D feature $F_{3D}^{(1)}$ via a fully connected layer:

$$F_{3D}^{(1)} = \mathrm{Reshape}\left(W \cdot \mathrm{Flatten}(F_{\mathrm{STL}}) + b\right) \quad (15)$$

Authorized licensed use limited to: Netaji Subhas University of Technology New Delhi. Downloaded on April 21,2026 at 17:08:57 UTC from IEEE Xplore. Restrictions apply.

where $W \in \mathbb{R}^{(C\times H\times W)\times(C\times D\times H\times W)}$ is the weight matrix of the fully connected layer, and $b \in \mathbb{R}^{C\times D\times H\times W}$ is the corresponding bias term.

3) 3D Decoder: Finally, the 3D feature $F_{\text{3D}}^{(1)}$ output from the FDC is upsampled through a series of 3D transposed convolution layers, where each layer progressively enhances the spatial resolution, refines the features, and ultimately restores the original resolution.

$$F_{3D} = [\text{Deconv3D}\left(F_{3D}^{(1)}\right), \ldots, \text{Deconv3D}\left(F_{3D}^{(5)}\right)] \quad (16)$$

B. Discriminator

Given the complexity of reconstructing CT from a single anteroposterior chest X-ray, we employed a 3D patch discriminator [15], as illustrated in Fig. 2 (b), instead of the conventional GAN discriminator. The discriminator processes small 3D patches with volumetric information rather than individual CT slices, enabling it to better capture 3D structures and improve reconstruction accuracy and image quality.

C. Loss Function

AP2CT-GAN is optimized by minimizing a specific loss function, which is crucial for achieving effective CT reconstruction. In the following section, we will introduce the adopted loss function.

1) Adversarial Loss: We employ Least Squares Generative Adversarial Network (LSGAN) loss in the adversarial loss to stabilize training, prevent mode collapse, and enhance CT reconstruction quality. The adversarial loss is defined as follows:

$$\begin{aligned}\mathcal{L}_{\text{lsgan(D)}} = \frac{1}{2}\Big[&\mathbb{E}_{y\sim p_{(\text{CT})}}\left(D(y|x)-1\right)^2 \\ &+\mathbb{E}_{x\sim p_{(X-ray)}}\left(D(G(x)|x)-0\right)^2\Big]\end{aligned} \quad (17)$$

$$\mathcal{L}_{\text{lsgan(G)}} = \frac{1}{2}\left[\mathbb{E}_{x\sim p_{(X-ray)}}\left(D(G(x)|x)-1\right)^2\right] \quad (18)$$

where x is the input anteroposterior chest X-ray, and y is the reconstructed CT. The discriminator loss is $\mathcal{L}_{\text{lsgan(D)}}$, and the generator loss is $\mathcal{L}_{\text{lsgan(G)}}$. p denotes the data distribution, and $\mathbb{E}$ represents the maximum likelihood estimate.

2) Reconstruction Loss: To ensure voxel-level consistency with the ground truth, we introduce a reconstruction loss to minimize the voxel-wise MSE between the reconstructed CT and the ground truth. The reconstruction loss is defined as follows:

$$\mathcal{L}_{\text{re}} = \mathbb{E}_{x,y}\left\|y - G(x)\right\|_2^2 \quad (19)$$

where y denotes the ground truth CT, and $G(x)$ represents the CT reconstructed by the generator.

3) Orthogonal Projection Loss: To ensure consistency between the reconstructed CT and the ground truth in the axial, coronal, and sagittal planes, we introduce an orthogonal projection loss. This loss projects the reconstructed CT from 3D to 2D planes and computes the Manhattan distance to the corresponding ground truth planes. The orthogonal projection loss is defined as follows:

$$\mathcal{L}_{op} = \frac{1}{3}\sum_{p\in P}\mathbb{E}_{x,y}\left[\sum_{u=1}^{U}\sum_{v=1}^{V}\left\|y_{uv}^{p} - G(x)_{uv}^{p}\right\|_1\right] \quad (20)$$

where the elements of $P = \{ax, co, sa\}$ represent the axial, coronal, and sagittal planes. U and V denote the row and column counts of the projection plane p, while u and v represent the coordinates. y_{uv}^{p} and $G(x)_{uv}^{p}$ are the ground truth and generated CT values at position (u, v) on plane p.

4) Dual-Consistency Loss: In CT image reconstruction tasks, traditional pixel-level loss functions can effectively maintain structural consistency between the generated CT images and the ground truth. However, these loss functions often result in overly smooth images, failing to capture high-level visual features, semantic information, and fine details, thereby preventing the reconstructed CT images from achieving optimal quality.

To address this issue, we designed a novel Dual-Consistency Loss function that applies constraints simultaneously at both the pixel and feature levels to optimize model performance. This not only ensures that the reconstructed CT images maintain consistency with the ground truth in terms of overall structural contours but also preserves more details and textures, making the reconstructed CT images visually highly consistent with the ground truth. The definition of the Dual-Consistency Loss is as follows:

$$\begin{aligned}\mathcal{L}_{\text{dc}} = \lambda_{\text{pixel}}\mathcal{L}_{\text{pixel}} + \lambda_{\text{feature}}\mathcal{L}_{\text{feature}} = \lambda_{\text{pixel}}\|y - G(x)\|_2^2 \\ + \lambda_{\text{feature}}\frac{1}{N}\sum_{i=1}^{N}\sum_{j=1}^{M} w_j|\phi_j(y_i) - \phi_j(G(x)_i)|\end{aligned} \quad (21)$$

where x represents the input orthogonal X-ray images, $G(x)$ represents the reconstructed CT images, and y represents the ground truth CT images, λ_{pixel} and λ_{feature} are the weight parameters used to balance the two loss components, N denotes the total number of CT slices, M represents the total number of feature layers used, $\phi(\cdot)$ denotes the features extracted from the j-th layer of the pre-trained VGG network, and w_j is the weight corresponding to the j-th feature layer.

Finally, the total loss functions for both the generator G and discriminator D are as follows:

$$\begin{aligned}D &= \arg\min_{D} \lambda_1\mathcal{L}_{\text{lsgan(D)}} \\ G &= \arg\min_{G}\left[\lambda_1\mathcal{L}_{\text{lsgan(G)}} + \lambda_2\mathcal{L}_{\text{re}} + \lambda_3\mathcal{L}_{\text{op}} + \lambda_4\mathcal{L}_{\text{dc}}\right]\end{aligned} \quad (22)$$

where λ_1, λ_2, λ_3, and λ_4 serve as the loss weighting factors.

III. EXPERIMENTS AND RESULTS

A. Dataset and Preprocessing

To train and validate our proposed model, it is necessary to construct a paired dataset containing anteroposterior chest X-ray images and CT data. However, building such a dataset presents two main challenges: first, collecting paired data requires patients to undergo X-ray and CT scans within a short time frame, which is extremely rare in clinical practice;

Authorized licensed use limited to: Netaji Subhas University of Technology New Delhi. Downloaded on April 21,2026 at 17:08:57 UTC from IEEE Xplore. Restrictions apply.

second, continuously exposing patients to high radiation to collect paired data violates medical ethics. To address these challenges, we use Digital Reconstructed Radiography (DRR) [16] technology to generate corresponding 2D chest X-ray images from real CT data, thereby constructing the paired dataset. Similar CT reconstruction studies [6], [7], [8], [9], [17], have demonstrated the feasibility of this approach.

Specifically, we used the publicly available LIDC-IDRI dataset, which contains 1018 chest CT scans. All scans were resampled to an isotropic resolution of $1 \times 1 \times 1$ mm^3 and centrally cropped to $128 \times 128 \times 128$ mm^3 to address protocol heterogeneity. Among them, 916 scans (117,248 slice images) were used for training and 102 (13,056 slice images) for testing.

B. Implementation Details

To ensure fair performance comparison, our propose AP2CT-GAN and all comparative experiments in this paper were trained and tested on an NVIDIA RTX 4090 GPU (with 24 GB of memory). Due to GPU memory limitations, the input X-ray image size was set to 128×128, and the batch size for all experiments was set to 2.

For the AP2CT-GAN, we employed the Adam optimizer with an initial learning rate of 2e-4 and momentum parameters $\beta_1 = 0.5$ and $\beta_2 = 0.99$. The loss hyperparameters in Equation (22) were set to $\lambda_1 = 0.1$, $\lambda_2 = 10$, $\lambda_3 = 10$, and $\lambda_4 = 5$. For in Equation (21), the hyperparameters $\lambda_{\text{pixel}} = 1$ and $\lambda_{\text{feature}} = 2$ were used to balance its two components. The model was trained for 100 epochs, with the learning rate kept constant for the first 50 epochs and linearly decayed to zero over the remaining 50 epochs. All other comparative experiments followed the same parameter settings as described in this paper.

C. Evaluation Metrics

To evaluate the performance of AP2CT-GAN in reconstructing CT images, we employed four common medical image reconstruction metrics: Peak Signal-to-Noise Ratio (PSNR), Structural Similarity Index (SSIM), Learned Perceptual Image Patch Similarity (LPIPS), and Normalized Root Mean Square Error (NRMSE).

D. Quantitative Results

We compared our method with 2DCNN [18], ReconNet [12], X2CT-GAN [6], DP-GAN [9], and 3DSP-GAN [7]. Table I summarizes the evaluation results, which represent the average metrics of CT images across three anatomical planes. AP2CT-GAN achieves the best performance (PSNR 26.63, SSIM 53.69), outperforming DSP-GAN by 0.07 in PSNR and DP-GAN by 0.54 in SSIM, highlighting its strengths in reconstruction quality and structure preservation. It also reduces LPIPS (38.15) and NRMSE (45.48) by 0.17 and 0.61, respectively, demonstrating better perceptual quality and error control. Additionally, CNN-based methods (e.g., ReconNet and 2DCNN) lag behind GANs in most metrics, while X2CT-GAN and DP-GAN show comparable performance in some metrics. The superior performance of AP2CT-GAN can be attributed to its innovative framework and the proposal of novel loss functions.

TABLE I
QUANTITATIVE COMPARISON RESULTS OF DIFFERENT METHODS ON TEST SET (MEAN ± STD). BEST RESULTS ARE HIGHLIGHTED IN BOLD.

Methods	PSNR(dB)↑	SSIM(%)↑	LPIPS↓	NRMSE(%)↓
ReconNet [12]	22.00±3.88	36.59±1.77	60.31±0.69	52.21±10.16
2DCNN [18]	25.33±2.87	50.21±2.18	52.86±0.83	46.97±9.00
X2CT-GAN [6]	26.16±3.11	52.51±2.11	38.37±1.56	46.77±9.49
DP-GAN [9]	26.45±3.50	53.15±2.09	39.35±1.55	46.09±9.08
DSP-GAN [7]	26.56±3.66	52.34±2.13	38.32±1.56	47.16±8.72
AP2CT-GAN(**Ours**)	**26.63±3.56**	**53.69±2.19**	**38.15±1.50**	**45.48±9.45**

E. Qualitative Results

To visually demonstrate the quality of the reconstructed CT images, Fig. 5 and Fig. 6 present comparisons of CT image slices and error maps generated by different methods. Specifically, CT images reconstructed by CNN-based methods exhibit missing lung textures and blurred contours of the heart, spine, and thoracic cavity. In contrast, CT images reconstructed by X2CT-GAN reveal cavities in the lung field, accompanied by a deformed trachea. Compared to other GAN-based methods, our approach more effectively captures critical structures, such as lung textures, spine, and trachea, while demonstrating notable improvements in preserving the structural integrity of the heart and aorta.

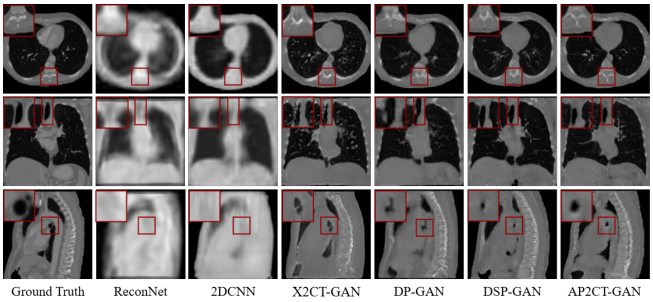

Fig. 5. Reconstructed CT slice examples from different methods on the axial plane (first row), coronal plane (second row), and sagittal plane (last row). Enlarged views of specific marked areas are highlighted with red borders in the upper left corners.

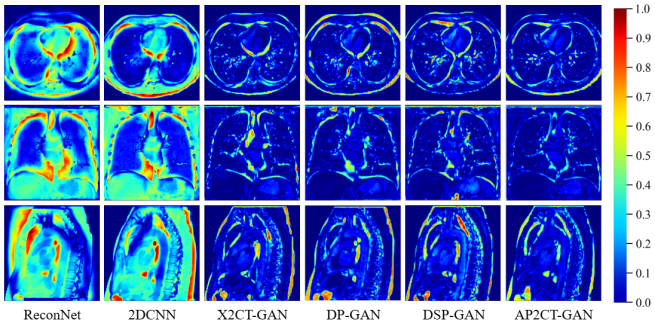

Fig. 6. Pixel values were scaled to $[0, 1]$. Blue indicates smaller differences from the ground truth. The sagittal plane shows the most notable results due to its rich organ and bone structures.

Authorized licensed use limited to: Netaji Subhas University of Technology New Delhi. Downloaded on April 21,2026 at 17:08:57 UTC from IEEE Xplore. Restrictions apply.

F. Ablation Study

1) Network Structure Ablation Study: To evaluate the contributions of the FEC module, FDC module, and Dual-Consistency Loss ($\mathcal{L}_{\mathbf{dc}}$) to AP2CT-GAN, we conducted an ablation study, with the results presented in Table II. Compared to the baseline, the inclusion of FEC, FDC, and $\mathcal{L}_{\text{dc}}$ improved PSNR by 0.47, SSIM by 1.18, reduced LPIPS by 0.22, and decreased NRMSE by 1.29, demonstrating the effectiveness of the network in enhancing CT image reconstruction. Notably, the FDC module achieved superior performance in LPIPS due to its strong capability in capturing contextual information.

TABLE II
ABLATION STUDY RESULTS SHOWING THE EFFECTS OF FEC, FDC, AND $\mathcal{L}_{\text{DC}}$ ON THE PERFORMANCE METRICS (MEAN ± STD). BEST RESULTS ARE HIGHLIGHTED IN BOLD.

FEC	FDC	$\mathcal{L}_{\mathbf{dc}}$	PSNR (dB)↑	SSIM (%)↑	LPIPS↓	NRMSE (%)↓
×	×	×	26.16±3.11	52.51±2.11	38.37±1.56	46.77±9.49
✓	×	×	26.44±3.39	52.89±2.14	38.11±1.63	46.62±9.92
✓	✓	×	26.45±3.48	52.76±2.10	**38.01±1.53**	47.11±9.03
✓	✓	✓	**26.63±3.56**	**53.69±2.19**	38.15±1.50	**45.48±9.45**

2) Loss Function Ablation Study: We conducted a study on Reconstruction Loss ($\mathcal{L}_{\text{re}}$), Orthogonal Projection Loss ($\mathcal{L}_{\text{op}}$), and Dual-Consistency Loss ($\mathcal{L}_{\text{dc}}$) to evaluate their impact on AP2CT-GAN. The results, presented in Table III, indicate that when all the proposed loss functions are used, the model achieves the best performance across all four evaluation metrics, fully validating the effectiveness of the complete loss design in optimizing the model.

TABLE III
ABLATION STUDY RESULTS SHOWING THE EFFECTS OF $\mathcal{L}_{\text{RE}}$, $\mathcal{L}_{\text{OP}}$, AND $\mathcal{L}_{\text{DC}}$ ON THE PERFORMANCE METRICS (MEAN ± STD). BEST RESULTS ARE HIGHLIGHTED IN BOLD.

$\mathcal{L}_{\mathbf{re}}$	$\mathcal{L}_{\mathbf{op}}$	$\mathcal{L}_{\mathbf{dc}}$	PSNR (dB)↑	SSIM (%)↑	LPIPS↓	NRMSE (%)↓
×	×	×	24.67±3.47	45.50±2.30	45.63±0.97	57.71±7.90
✓	×	×	26.02±3.26	52.62±2.10	38.37±1.57	48.40±9.30
✓	✓	×	26.37±3.44	52.87±2.23	38.28±1.43	46.83±9.36
✓	✓	✓	**26.63±3.56**	**53.69±2.19**	**38.15±1.50**	**45.48±9.45**

IV. CONCLUSIONS

In this paper, we propose AP2CT-GAN, a novel medical image reconstruction framework for chest CT based on a single anteroposterior X-ray. To this end, we propose FEC and FDC modules enhance critical features and capture global context, while a Dual-Consistency Loss enforces structural and textural fidelity. Experiments show our method outperforms existing approaches, achieving accurate anatomical reconstruction. While not a full CT replacement, it provides a low-radiation, cost-effective alternative suitable for resource-limited areas and ICU settings.

REFERENCES

[1] Johann Radon, "1.1 über die bestimmung von funktionen durch ihre integralwerte längs gewisser mannigfaltigkeiten," *Classic papers in modern diagnostic radiology*, vol. 5, no. 21, pp. 124, 2005.

[2] Tim Nielsen, Sebastian Hitziger, Michael Grass, and Armin Iske, "Filter calculation for x-ray tomosynthesis reconstruction," *Physics in Medicine & Biology*, vol. 57, no. 12, pp. 3915, 2012.

[3] Hong-yan Qu, Feng Xu, Xiao-fang Hu, Luo-bin Wang, Jing Zhao, and Zhong Zhang, "A novel denoising method based on radon transform and filtered back-projection reconstruction algorithm," *Optics and Lasers in Engineering*, vol. 50, no. 4, pp. 593–598, 2012.

[4] Emil Y Sidky and Xiaochuan Pan, "Image reconstruction in circular cone-beam computed tomography by constrained, total-variation minimization," *Physics in Medicine & Biology*, vol. 53, no. 17, pp. 4777, 2008.

[5] Siyu Lu, Bo Yang, Ye Xiao, Shan Liu, Mingzhe Liu, Lirong Yin, and Wenfeng Zheng, "Iterative reconstruction of low-dose ct based on differential sparse," *Biomedical Signal Processing and Control*, vol. 79, pp. 104204, 2023.

[6] Xingde Ying, Heng Guo, Kai Ma, Jian Wu, Zhengxin Weng, and Yefeng Zheng, "X2ct-gan: reconstructing ct from biplanar x-rays with generative adversarial networks," in *Proceedings of the IEEE/CVF conference on computer vision and pattern recognition*, 2019, pp. 10619–10628.

[7] Chun Huang, Kunqi Li, Jing Fang, and Jun Liu, "3dsp-gan: A 3d-to-3d network for ct reconstruction from biplane x-rays," in *2024 IEEE 7th Advanced Information Technology, Electronic and Automation Control Conference (IAEAC)*. IEEE, 2024, vol. 7, pp. 931–935.

[8] Zheye Chen, Lijun Guo, Rong Zhang, Zhongding Fang, Xiuchao He, and Jianhua Wang, "Bx2s-net: Learning to reconstruct 3d spinal structures from bi-planar x-ray images," *Computers in Biology and Medicine*, vol. 154, pp. 106615, 2023.

[9] Xinlong Xing, Xiaosen Li, Chaoyi Wei, Zhantian Zhang, Ou Liu, Senmiao Xie, Haoman Chen, Shichao Quan, Cong Wang, Xin Yang, et al., "Dp-gan+ b: A lightweight generative adversarial network based on depthwise separable convolutions for generating ct volumes," *Computers in Biology and Medicine*, vol. 174, pp. 108393, 2024.

[10] Md Aminur Rab Ratul, Kun Yuan, and WonSook Lee, "Ccx-raynet: a class conditioned convolutional neural network for biplanar x-rays to ct volume," in *2021 IEEE 18th International Symposium on Biomedical Imaging (ISBI)*. IEEE, 2021, pp. 1655–1659.

[11] Zhiqiang Tan, Shibo Li, Ying Hu, Huiren Tao, and Lihai Zhang, "Semi-xctnet: Volumetric images reconstruction network from a single projection image via semi-supervised learning," *Computers in Biology and Medicine*, vol. 155, pp. 106663, 2023.

[12] Liyue Shen, Wei Zhao, and Lei Xing, "Patient-specific reconstruction of volumetric computed tomography images from a single projection view via deep learning," *Nature biomedical engineering*, vol. 3, no. 11, pp. 880–888, 2019.

[13] Zhiqiang Tan, Jun Li, Huiren Tao, Shibo Li, and Ying Hu, "Xctnet: Reconstruction network of volumetric images from a single x-ray image," *Computerized Medical Imaging and Graphics*, vol. 98, pp. 102067, 2022.

[14] Sanuwani Dayarathna, Kh Tohidul Islam, Sergio Uribe, Guang Yang, Munawar Hayat, and Zhaolin Chen, "Deep learning based synthesis of mri, ct and pet: Review and analysis," *Medical Image Analysis*, p. 103046, 2023.

[15] Phillip Isola, Jun-Yan Zhu, Tinghui Zhou, and Alexei A Efros, "Image-to-image translation with conditional adversarial networks," in *Proceedings of the IEEE conference on computer vision and pattern recognition*, 2017, pp. 1125–1134.

[16] Natasa Milickovic, Dimos Baltas, S Giannouli, M Lahanas, and N Zamboglou, "Ct imaging based digitally reconstructed radiographs and their application in brachytherapy," *Physics in Medicine & Biology*, vol. 45, no. 10, pp. 2787, 2000.

[17] Helin Cao and Sven Behnke, "SLCF-Net: Sequential LiDAR-camera fusion for semantic scene completion using a 3D recurrent U-Net," in *IEEE International Conference on Robotics and Automation (ICRA)*, 2024, pp. 2767–2773.

[18] Phlipp Henzler, Volker Rasche, Timo Ropinski, and Tobias Ritschel, "Single-image tomography: 3d volumes from 2d cranial x-rays," in *Computer Graphics Forum*. Wiley Online Library, 2018, vol. 37, pp. 377–388.

Authorized licensed use limited to: Netaji Subhas University of Technology New Delhi. Downloaded on April 21,2026 at 17:08:57 UTC from IEEE Xplore. Restrictions apply.