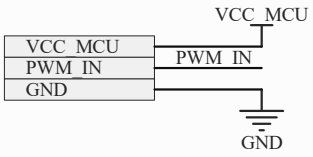

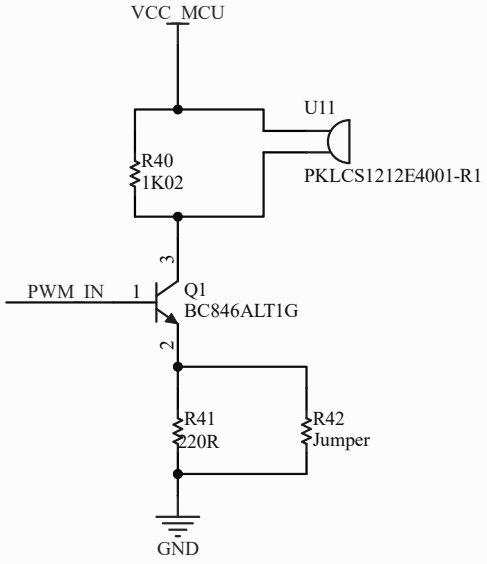

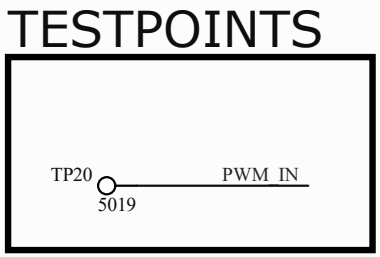

Title		
Size A	Number	Revision
Date: 3/13/2021		Sheet of
File: \\..\Buzzer.SchDoc		Drawn By: