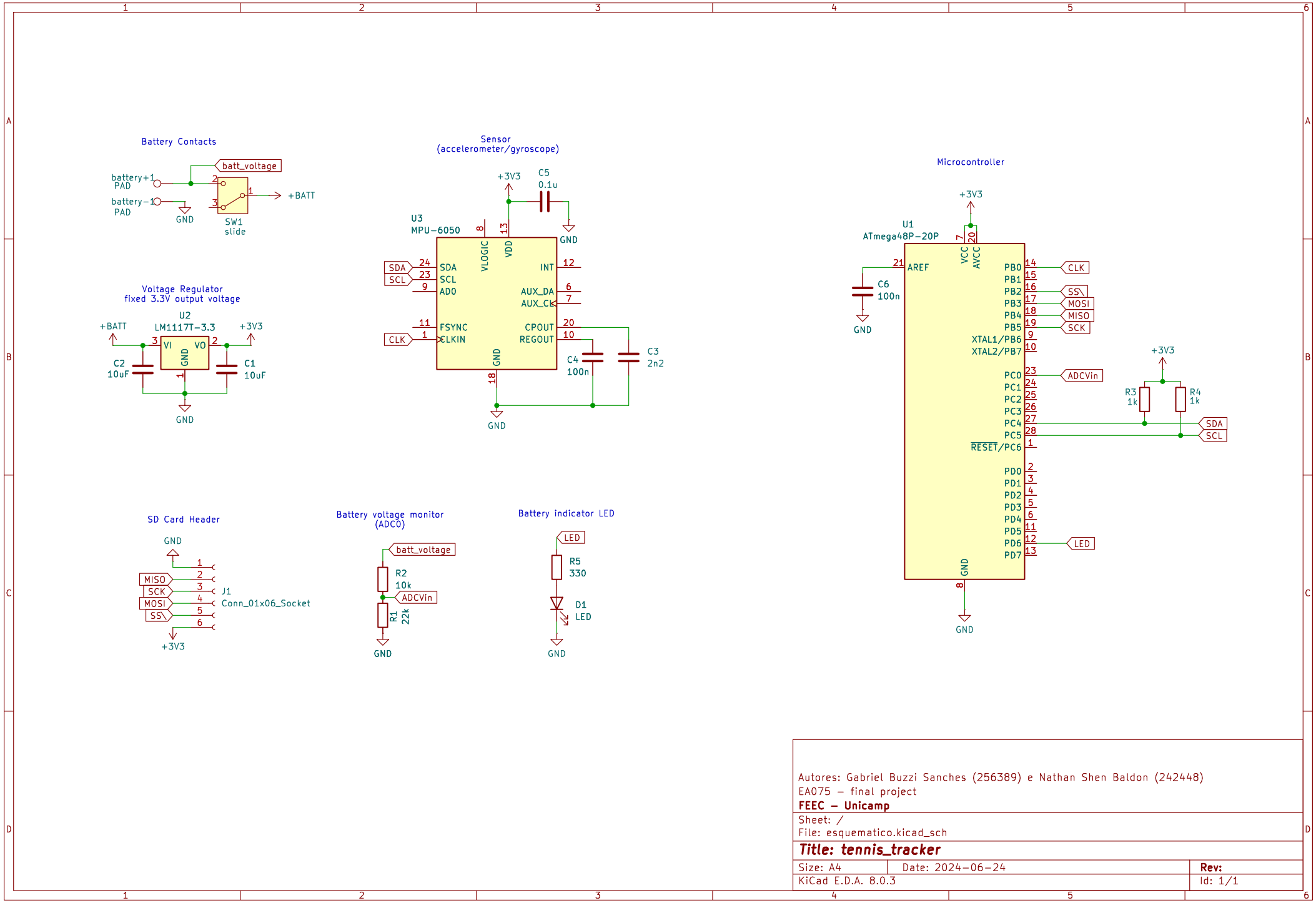

Autores: Gabriel Buzzi Sanches (256389) e Nathan Shen Baldon (242448)
EA075 – final project
FEEC – Unicamp

Sheet: /
File: esquematico.kicad_sch

Title: tennis_tracker

Size: A4	Date: 2024-06-24	**Rev:**
KiCad E.D.A. 8.0.3		Id: 1/1