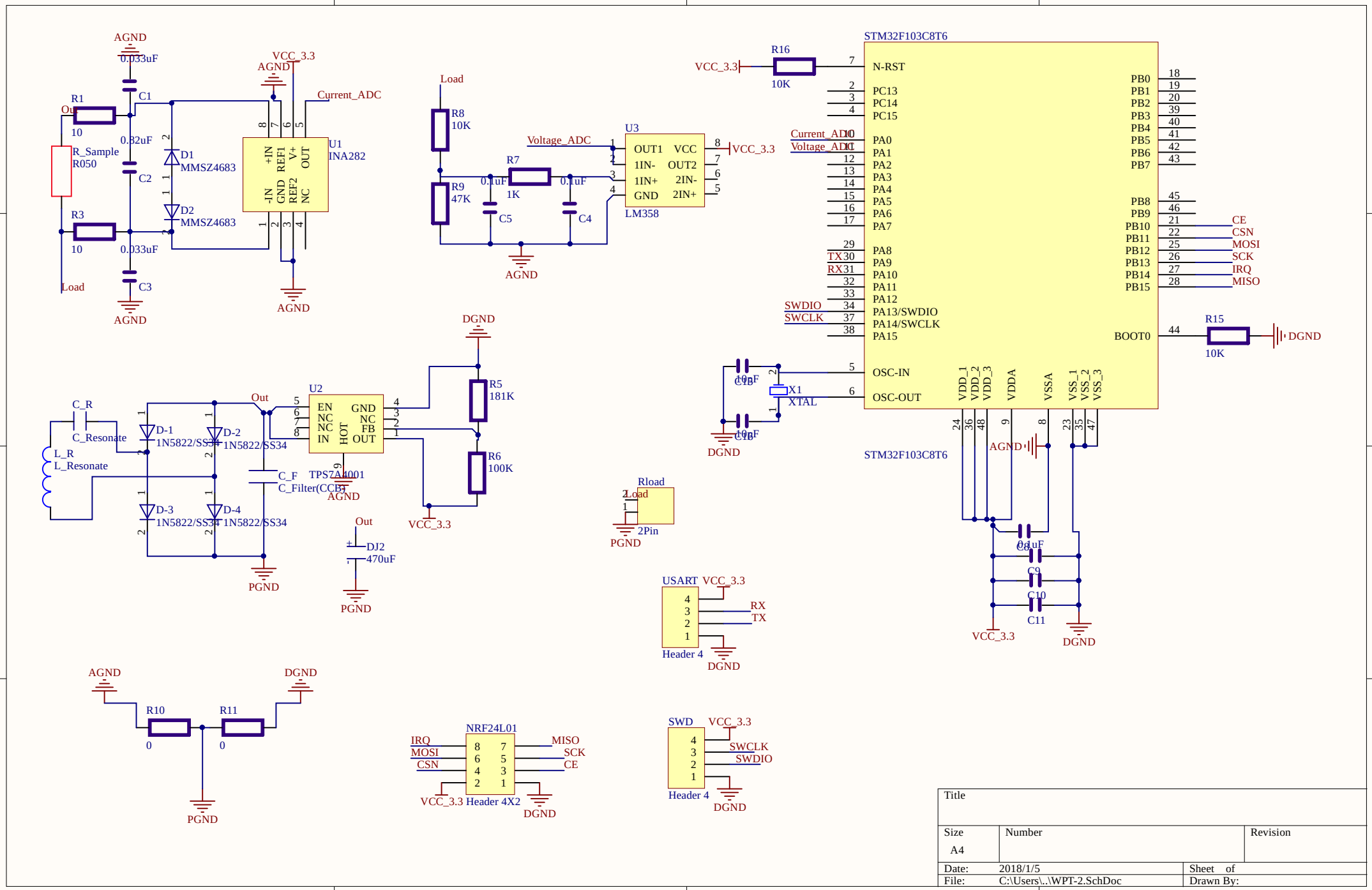

Title		
Size A4	Number	Revision
Date: 2018/1/5		Sheet of
File: C:\Users\..\WPT-2.SchDoc		Drawn By: