供电模块

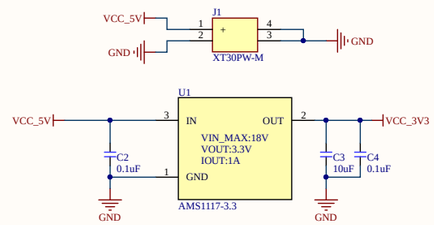

IO接口

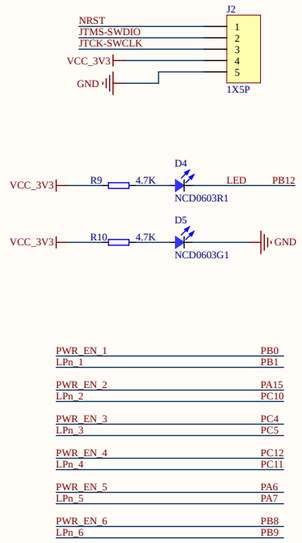

MCU

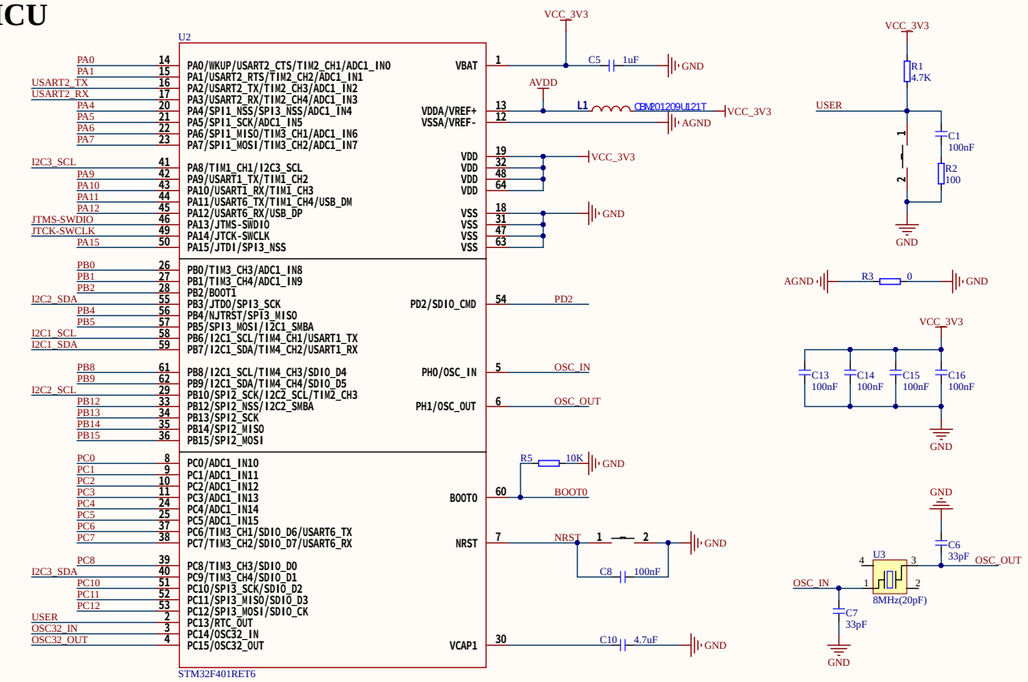

USB转UART

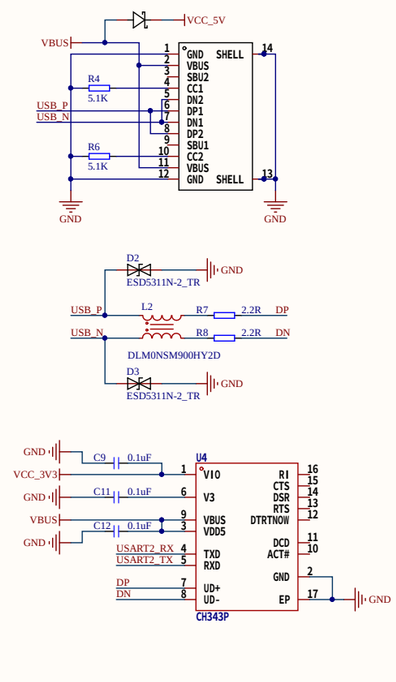

传感器接口

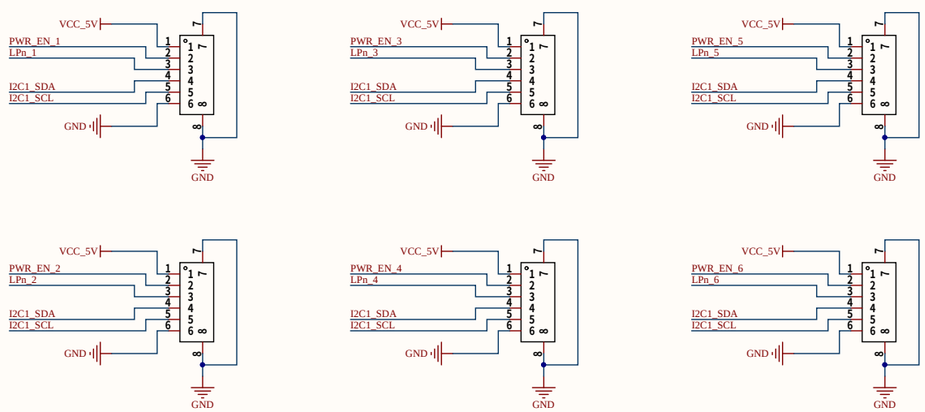

VL53L8_MCU_V1.0

202601

Title		
Size A2	Number	Revision
Date: 2026/1/8		Sheet of
File: F:\工作项目\..\VL53L8_MCU_V1.0.SchDoc		Drawn By:

传感器接口

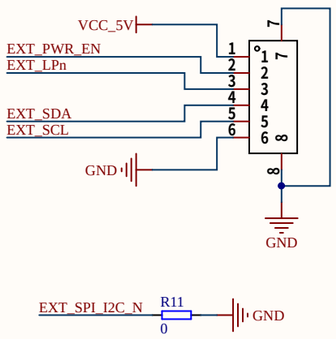

降压模块

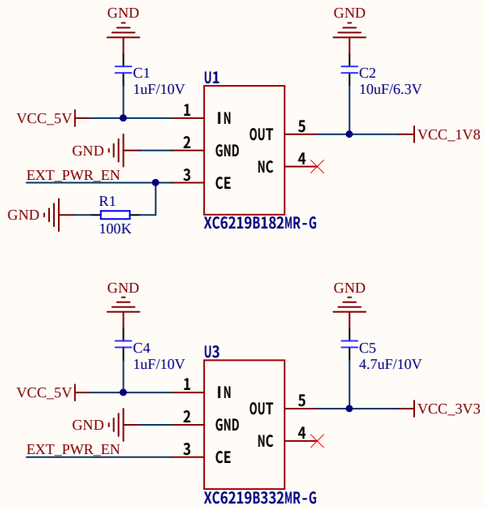

传感器模块

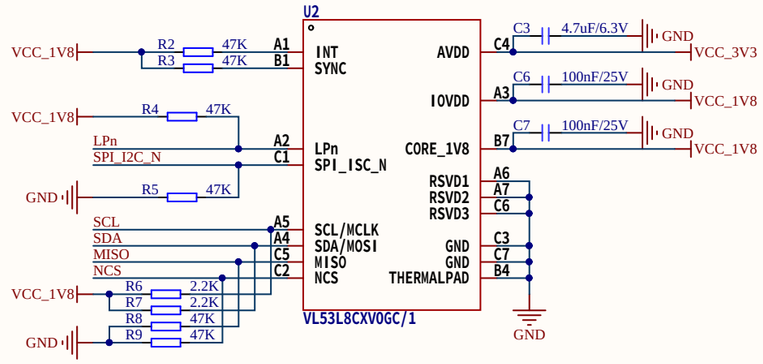

电平转换

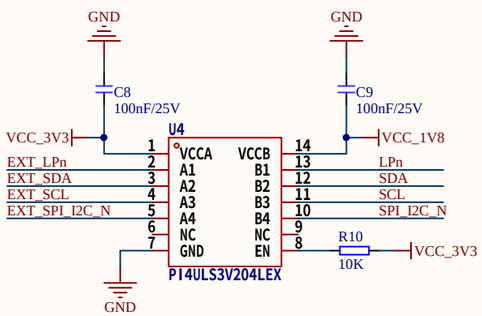

VL53L8_V1.0

202601

Title		
Size A3	Number	Revision
Date: 2026/1/8		Sheet of
File: F:\工作项目\..\VL53L8_V1.0.SchDoc		Drawn By:

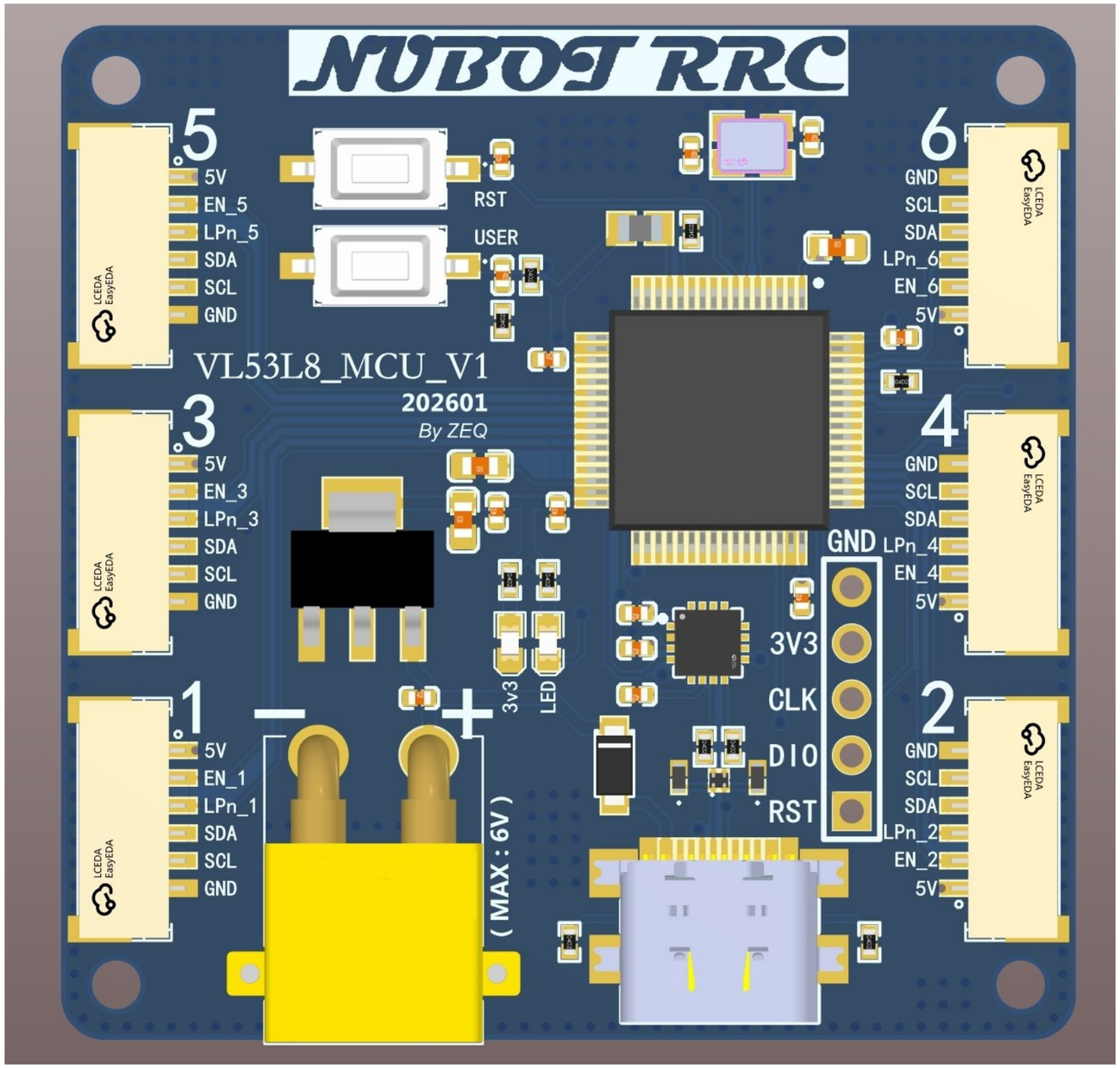
NUBOT RRC
5
5V
EN_5
LPn_5
SDA
SCL
GND
RST
USER
6
GND
SCL
SDA
LPn_6
EN_6
5V
VL53L8_MCU_V1
202601
By ZEQ
3
5V
EN_3
LPn_3
SDA
SCL
GND
4
GND
SCL
SDA
LPn_4
EN_4
5V
GND
3V3
CLK
DIO
RST
3v3
LED
1
5V
EN_1
LPn_1
SDA
SCL
GND
2
GND
SCL
SDA
LPn_2
EN_2
5V
(MAX : 6V)
LCEDA
EasyEDA

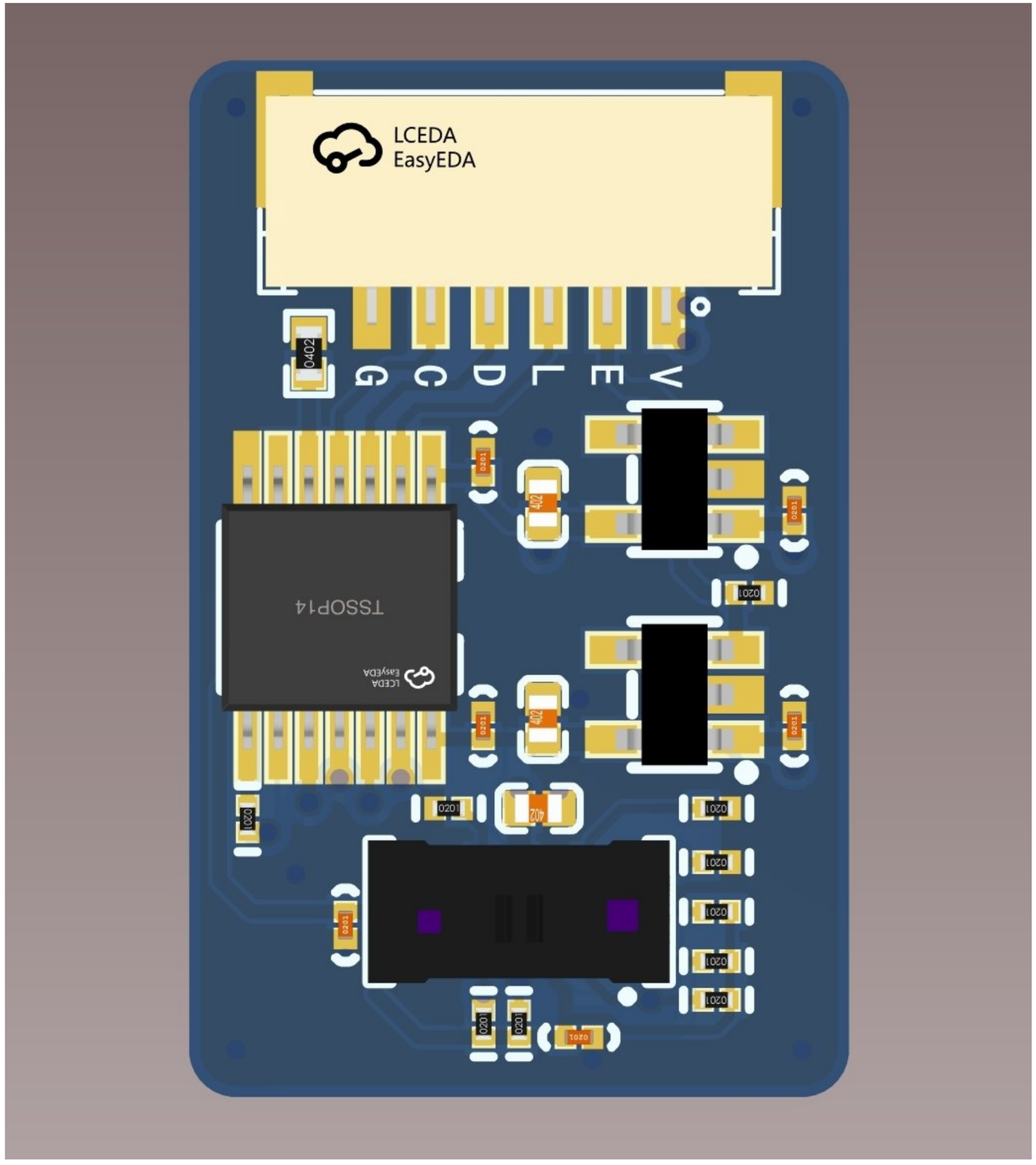
LCEDA
EasyEDA
TSSOP14
LCEDA
EasyEDA