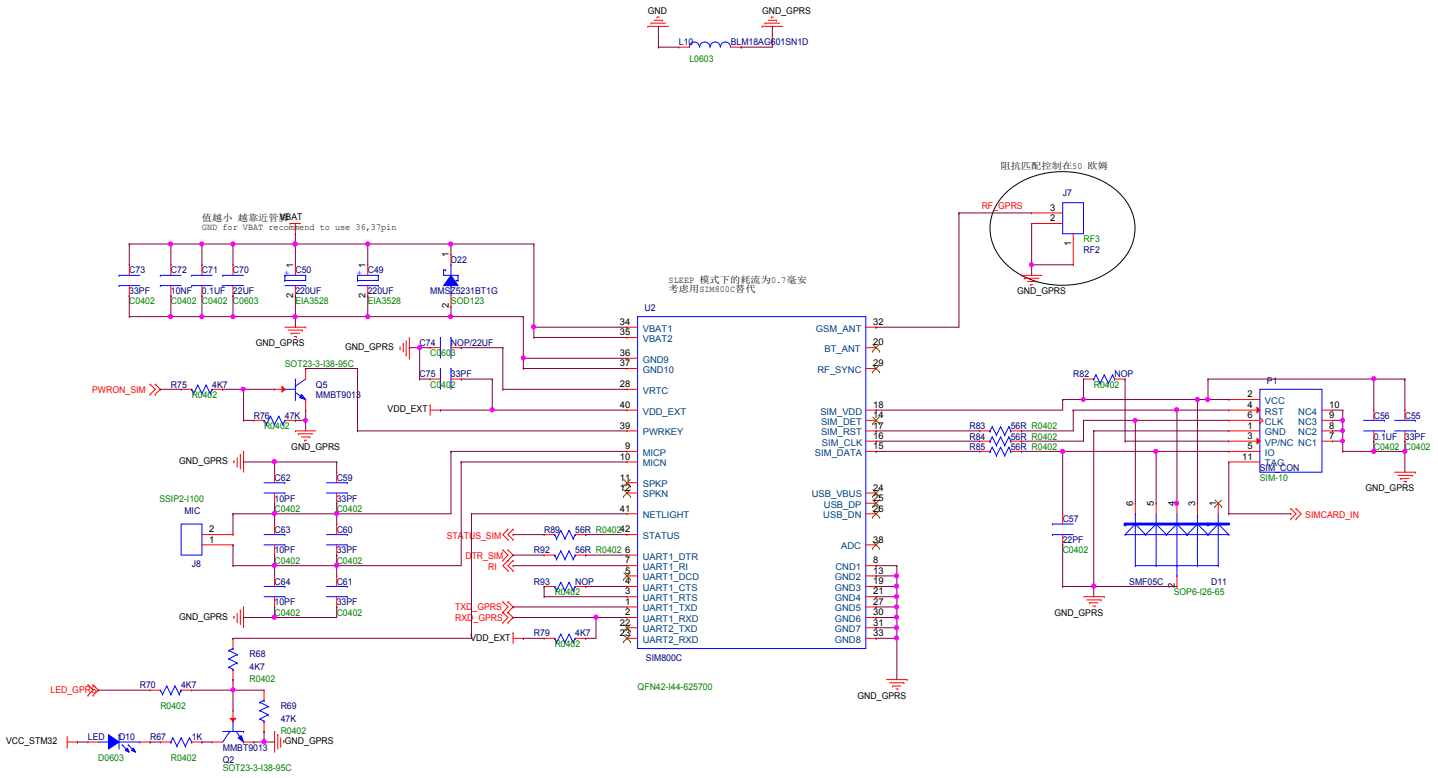

Title	<Title>	
Size C	Document Number <Doc>	Rev <RevCode>
Date: Tuesday, March 08, 2016	Sheet 1 of 1	

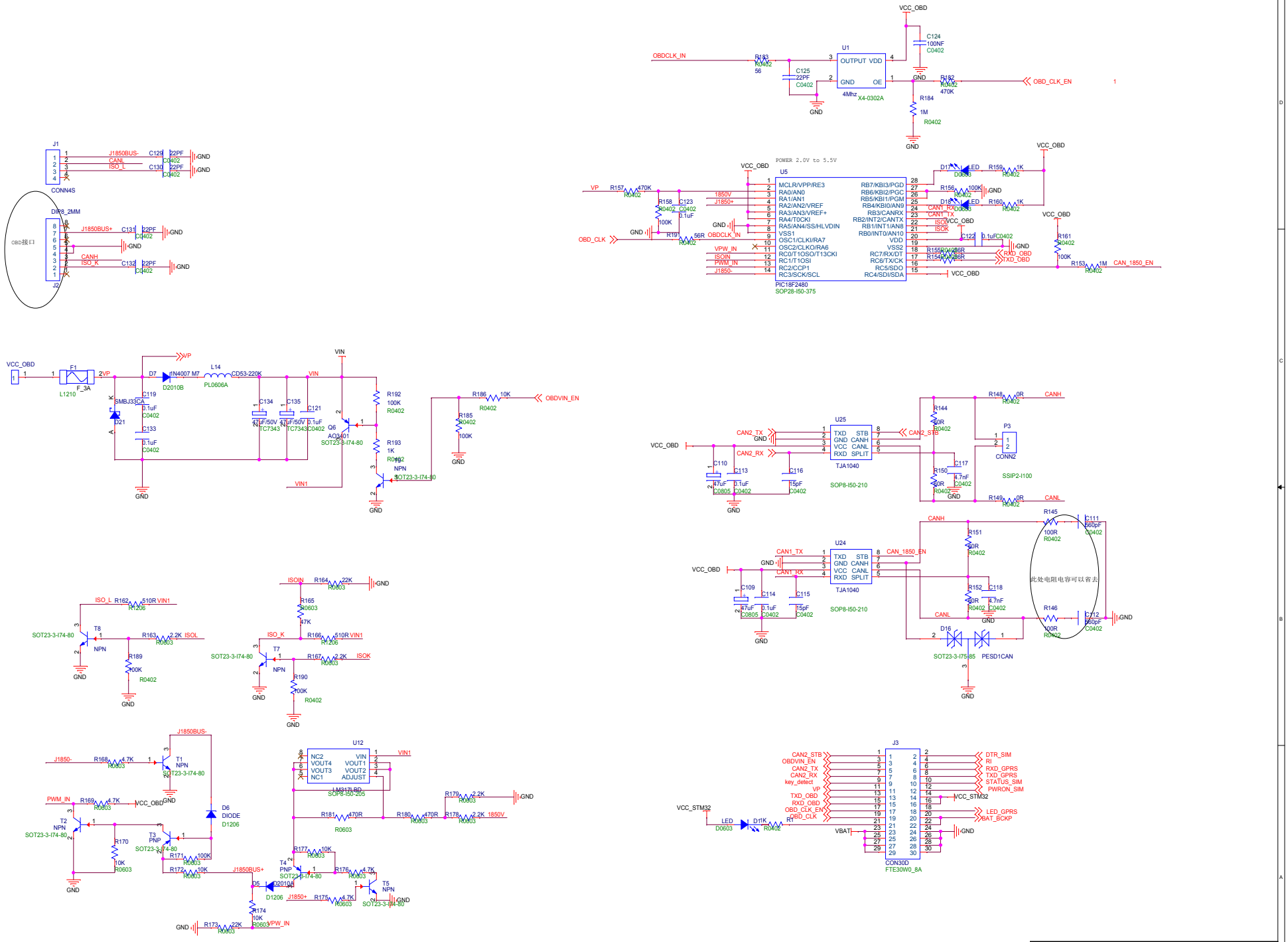
VCC_OBD
OBDCLK_IN
U1
OUTPUT VDD
GND OE
4Mhz X4-0302A
OBD_CLK_EN
J1
CONN4S
DIR8_2MM
OBD接口
J2
J1850BUS-
CANL
ISO_L
J1850BUS+
CANH
ISO_K
U5
POWER 2.0V to 5.5V
MCLR/VPP/RE3
RA0/AN0
RA1/AN1
RA2/AN2/VREF
RA3/AN3/VREF+
RA4/T0CKI
RA5/AN4/SS/HLVDIN
VSS1
OSC1/CLKI/RA7
OSC2/CLKO/RA6
RC0/T1OSO/T13CKI
RC1/T1OSI
RC2/CCP1
RC3/SCK/SCL
RB7/KBI3/PGD
RB6/KBI2/PGC
RB5/KBI1/PGM
RB4/KBI0/AN9
RB3/CANRX
RB2/INT2/CANTX
RB1/INT1/AN8
RB0/INT0/AN10
VDD
VSS2
RC7/RX/DT
RC6/TX/CK
RC5/SDO
RC4/SDI/SDA
PIC18F2480
SOP28-I50-375
VP
OBD_CLK
VPW_IN
ISOIN
PWM_IN
J1850-
J1850+
1850V
CAN1_TX
CAN1_RX
ISOK
RXD_OBD
TXD_OBD
CAN_1850_EN
CAN_1850_EN
VIN
VIN1
OBDVIN_EN
F1
F_3A
L1210
D7
1N4007 M7
D2010B
L14
CD53-220K
PL0606A
SMBJ33CA
D21
Q6
AO3401
SOT23-3-I74-80
NPN
U25
TXD STB
GND CANH
VCC CANL
RXD SPLIT
TJA1040
SOP8-I50-210
CAN2_TX
CAN2_RX
CAN2_STB
CANH
CANL
P3
CONN2
SSIP2-I100
U24
此处电阻电容可以省去
D16
SOT23-3-I75-85
PESD1CAN
ISO_L
ISOL
ISO_K
T8
T7
U12
NC2 VIN
VOUT4 VOUT1
VOUT3 VOUT2
NC1 ADJUST
LM317LBD
SOP8-I50-205
T1
T2
T3
T4
T5
D6
DIODE
D1206
D5
PWM_IN
J3
CON30D
FTE30W0_8A
CAN2_STB
OBDVIN_EN
CAN2_TX
CAN2_RX
key_detect
VP
TXD_OBD
RXD_OBD
OBD_CLK_EN
OBD_CLK
DTR_SIM
RI
RXD_GPRS
TXD_GPRS
STATUS_SIM
PWRON_SIM
LED_GPRS
BAT_BCKP
VCC_STM32
VBAT
D1K
D0603
Title
<Title>
Size C
Document Number
<Doc>
Rev
<RevCode>
Date: Monday, May 30, 2016
Sheet 1 of 1

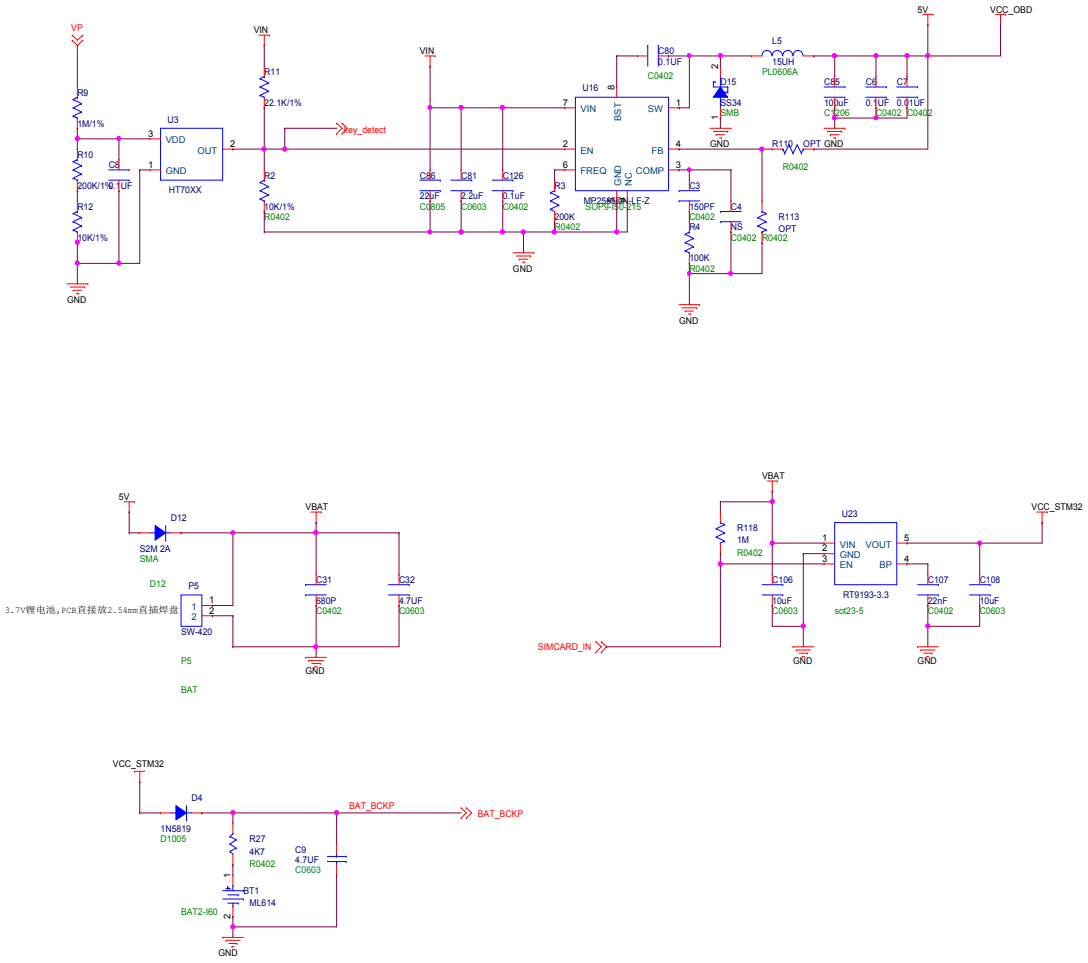

Title	<Title>	
Size C	Document Number <Doc>	Rev <RevCode>
Date: Wednesday, May 18, 2016	Sheet 1 of 1	