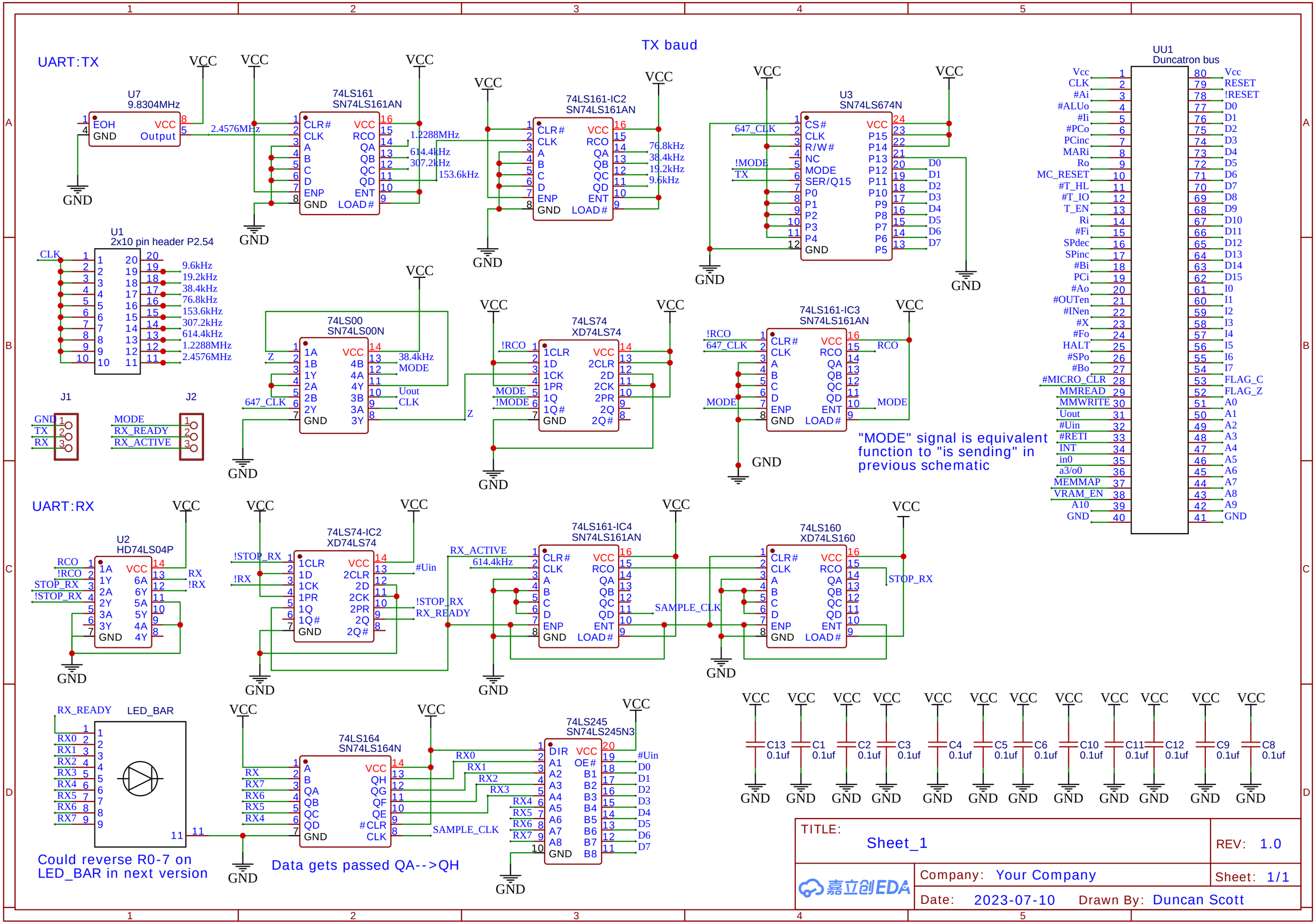
UART:TX
TX baud
U7
9.8304MHz
EOH
GND
VCC
Output
2.4576MHz
74LS161
SN74LS161AN
CLR#
CLK
A
B
C
D
ENP
GND
RCO
QA
QB
QC
QD
ENT
LOAD#
1.2288MHz
614.4kHz
307.2kHz
153.6kHz
74LS161-IC2
SN74LS161AN
76.8kHz
38.4kHz
19.2kHz
9.6kHz
U3
SN74LS674N
CS#
R/W#
NC
MODE
SER/Q15
P0
P1
P2
P3
P4
P15
P14
P13
P12
P11
P10
P9
P8
P7
P6
P5
647_CLK
!MODE
TX
D0
D1
D2
D3
D4
D5
D6
D7
UU1
Duncatron bus
Vcc
CLK
#Ai
#ALUo
#Ii
#PCo
PCinc
MARi
Ro
MC_RESET
#T_HL
#T_IO
T_EN
Ri
#Fi
SPdec
SPinc
#Bi
PCi
#Ao
#OUTen
#INen
#X
#Fo
HALT
#SPo
#Bo
#MICRO_CLR
MMREAD
MMWRITE
Uout
#Uin
#RETI
INT
in0
a3/o0
MEMMAP
VRAM_EN
A10
GND
RESET
!RESET
D0
D1
D2
D3
D4
D5
D6
D7
D8
D9
D10
D11
D12
D13
D14
D15
I0
I1
I2
I3
I4
I5
I6
I7
FLAG_C
FLAG_Z
A0
A1
A2
A3
A4
A5
A6
A7
A8
A9
U1
2x10 pin header P2.54
CLK
9.6kHz
19.2kHz
38.4kHz
76.8kHz
153.6kHz
307.2kHz
614.4kHz
1.2288MHz
2.4576MHz
74LS00
SN74LS00N
1A
1B
1Y
2A
2B
2Y
4B
4A
4Y
3B
3A
3Y
Z
647_CLK
38.4kHz
MODE
Uout
CLK
74LS74
XD74LS74
!RCO
1CLR
1D
1CK
1PR
1Q
1Q#
2CLR
2D
2CK
2PR
2Q
2Q#
74LS161-IC3
SN74LS161AN
"MODE" signal is equivalent function to "is sending" in previous schematic
J1
GND
TX
RX
J2
MODE
RX_READY
RX_ACTIVE
UART:RX
U2
HD74LS04P
RCO
!RCO
STOP_RX
!STOP_RX
RX
!RX
74LS74-IC2
XD74LS74
#Uin
!STOP_RX
RX_READY
614.4kHz
74LS161-IC4
SN74LS161AN
SAMPLE_CLK
74LS160
XD74LS160
STOP_RX
LED_BAR
RX0
RX1
RX2
RX3
RX4
RX5
RX6
RX7
74LS164
SN74LS164N
#CLR
74LS245
SN74LS245N3
DIR
OE#
A1
A2
A3
A4
A5
A6
A7
A8
B1
B2
B3
B4
B5
B6
B7
B8
Could reverse R0-7 on LED_BAR in next version
Data gets passed QA-->QH
C13 0.1uf
C1 0.1uf
C2 0.1uf
C3 0.1uf
C4 0.1uf
C5 0.1uf
C6 0.1uf
C10 0.1uf
C11 0.1uf
C12 0.1uf
C9 0.1uf
C8 0.1uf
TITLE:
Sheet_1
REV: 1.0
Company: Your Company
Sheet: 1/1
Date: 2023-07-10
Drawn By: Duncan Scott
嘉立创EDA