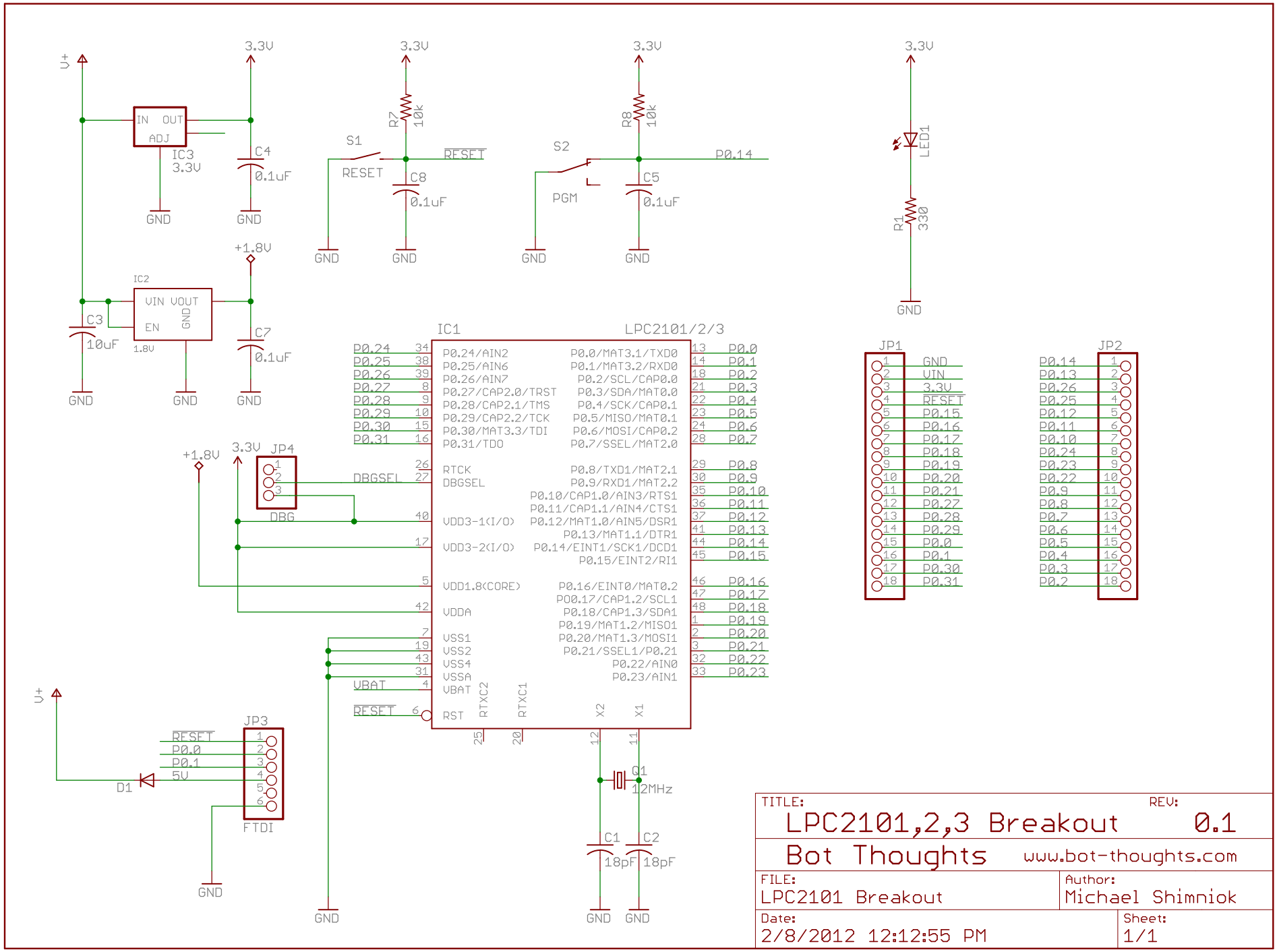

TITLE: LPC2101,2,3 Breakout	REV: 0.1
Bot Thoughts	www.bot-thoughts.com
FILE: LPC2101 Breakout	Author: Michael Shimniok
Date: 2/8/2012 12:12:55 PM	Sheet: 1/1