Objective
124134 – Type f=160-355-6

Technical Specifications

Nominal focal length [mm]	160
Wavelength specified by manufacturer [nm]	340-370
Protective window	yes (123554)
Max. beam diameter specified by manufacturer [mm]	10
Optical elements entirely made of fused silica	yes

Attachments

Technical specifications for 2D scan system setup 124134, 114915, 128404
Dimensions and installation instruction for Objective mounting kit-136 114915

© SCANLAB GmbH

2D Scan System Setup
124134, 114915, 128404

Setup

Objective	124134 – Objective f=160-355-6
Objective mounting kit	114915 – Objective mounting kit-136
Scan System	128404 – intelliSCAN 14; 355nm-IP
Working wavelength, for which the following quantities are specified [nm]	355

Technical Specifications

Typical image field size [mm²] [(1)]	75 x 75
Max. allowed scan angle of the objective in this setup [± rad optical] [(1),(2)]	0.23
Max. adjustable scan angle of the scan system [± rad optical]	0.389
A [mm]	350
C [mm]	129
D [mm]	127

[(1)] For vignetting of less than 1% (with full aperture illumination)

[(2)] Only relevant, if smaller than the max. adjustable scan angle of the scan system

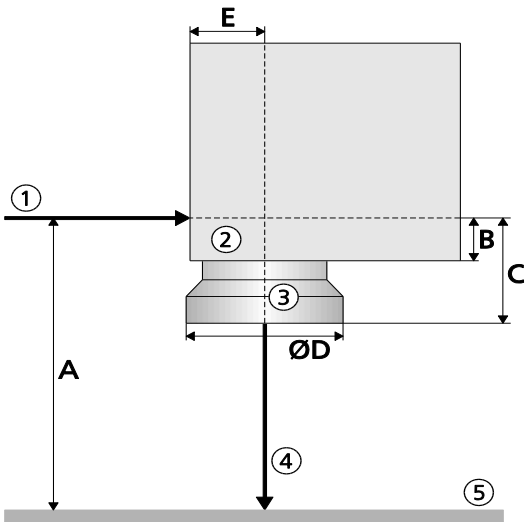

Legend

A Working distance between beam entrance center and image field
B Distance between beam entrance center and lower edge of the scan head (see scan head manual)
C Distance between beam entrance center and lower edge of the objective
D Maximum diameter of objective and objective mounting kit
E Distance between beam entrance side and beam exit center (see scan head manual)

1 Entering laser beam
2 Scan head
3 Objective
4 Emerging laser beam (with mirrors in neutral position)
5 Image field

The schematic drawing is neither true to scale, nor does it show all the equipment features of the components.

© SCANLAB GmbH

Objective mounting kit - Objektivmontagesatz
114915

all dimensions in mm - Abmessungen in mm

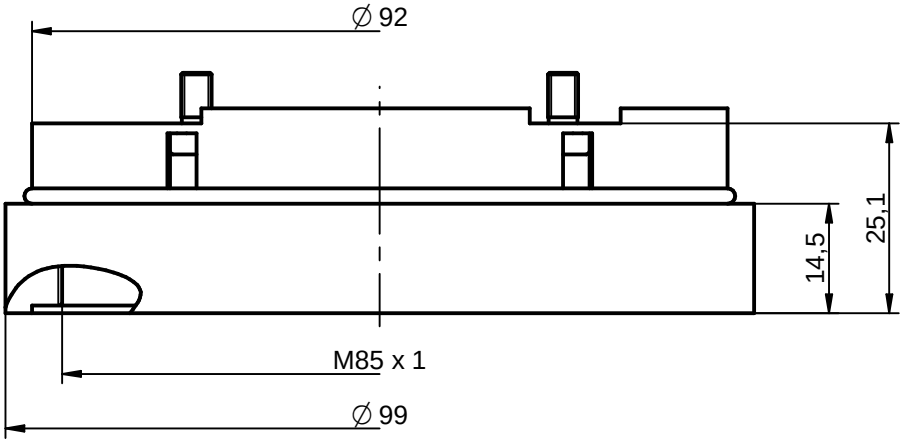

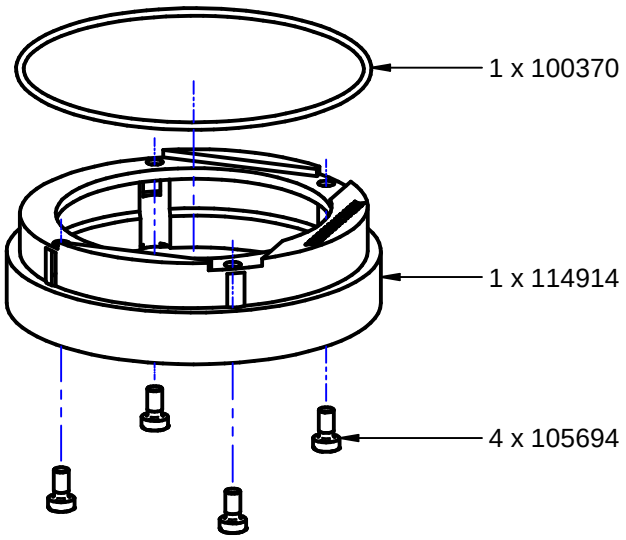

objective mounting side - Objektivanbauseite

© SCANLAB GmbH 2022