Installation and Operation

Camera Adapter (ID# 127502)

SCANLAB GmbH
Siemensstr. 2a
82178 Puchheim
Germany

Tel. +49 (89) 800 746-0
Fax: +49 (89) 800 746-199

info@scanlab.de
www.scanlab.de

© SCANLAB GmbH 2022

(Doc. Rev. 1.6 - March 9, 2022)

SCANLAB reserves the right to change the information in this document without notice.
No part of this manual may be processed, reproduced or distributed in any form (photocopy, print, microfilm or by any other means), electronic or mechanical, for any purpose without the written permission of SCANLAB GmbH.

All mentioned trademarks are hereby acknowledged as properties of their respective owners.

Table of Contents

1 Introduction 4
1.1 Product Overview 4
1.2 Unpacking Instructions and Typical Package Contents 4
1.3 Labeling 4

2 Principle of Operation 5
2.1 Intended Usage 5
2.2 Mechanical Design 5
2.3 Observation Field Size 6
2.4 Observation Field Position 6
2.5 Imaging Quality 6

3 Installation 7
3.1 Checking the Specifications 7
3.2 Dimensions 8
3.3 Mounting the Camera Adapter 10
3.4 Adjusting the Objective Unit's Orientation 11
3.5 Mounting a Camera 13
3.6 Providing Illumination 13
3.7 Mounting a Color Filter 14
3.8 Beam Dump when Using Higher Laser Powers 15
3.9 Operating and Storage Conditions 15

4 Start-up and Operation 16
4.1 Checking the Installation 16
4.2 Checking the Laser Parameters 16
4.3 Adjustment of the Laser Beam 16
4.4 Optimizing Image Quality 17

5 Routine Maintenance and Customer Service 18
5.1 Routine Maintenance of the Optical Surfaces 18
Routine Maintenance of the Beam Splitter 18
Routine Maintenance of the Camera Objective 18
5.2 Customer Service 19

6 Camera Adapter Specifications 20

1 Introduction

This operating manual describes the SCANLAB camera adapter

- # 127502
  (objective unit, beam splitter housing incl. beam splitter and two adapter plates).

This manual is a part of the product. Please read these instructions carefully before you proceed with installing and operating the camera adapter. In particular observe all safety guidelines in this manual. If there are any questions regarding the contents of this manual, please contact SCANLAB (see page 19).

Keep the manual available for servicing, repairs and product disposal. This manual should accompany the product if ownership changes hands.

SCANLAB reserves the right to update this operating manual at any time and without notification.

1.1 Product Overview

SCANLAB camera adapters are designed for camera-based observation of the working field of a scan head.

The camera adapter in the above listed product configuration can be attached to the beam entrance of a *SCAN*cube or an excelli*SCAN*-scan head from SCANLAB.
The beam splitter is designed for a laser wavelength of 1030 nm - 1110 nm and an observation wavelength of 450 nm - 900 nm.

The objective unit includes a camera objective with a focal length of f = 105 mm (for a wavelength of 450 nm - 950 nm), an adjustable iris diaphragm, provisions for installing a C-mount-compatible camera (or if necessary for installing C-mount adapters) and provisions for installing color filters.

The technical specifications of the product are summarized on page 20.

1.2 Unpacking Instructions and Typical Package Contents

- Carefully remove the camera adapter from the package.
- Protect the camera adapter from dust and other contaminants.
- Keep the packaging and protective caps so that in case of repair the camera adapter can be properly repackaged and returned to SCANLAB.
- Check that all parts have been delivered. Please refer to the corresponding packaging list.
  The package typically includes:
  - the camera adapter with beam splitter housing (incl. beam splitter), two adapter plates and an objective unit
  - a mounting kit for mounting the camera adapter to the scan head
  - optionally one or several C-mount extensions
  - this operating manual

  The delivered package does not include a camera, color filter, color filter retaining ring, color filter mount nor lighting for the working field. Customers can select those components according to their requirements.

1.3 Labeling

The camera adapter's I.D. plate with the camera adapter's serial number is found on the housing.

2 Principle of Operation

2.1 Intended Usage

The camera adapter can be attached to the beam entrance of a SCANLAB scan head for camera-based observation of the working field (if the scan head is equipped with a scan objective). For observation, the camera adapter optic decouples the light arriving from the illuminated working field and subsequently passing through the scan head's scan objective and scan mirrors to the beam entrance. The portion of the working field capturable by the camera depends on the scan mirrors' positions.

2.2 Mechanical Design

The camera adapter essentially consists of four components: 2 adapter plates, a beam-splitter housing and an objective unit (also see figure 1).

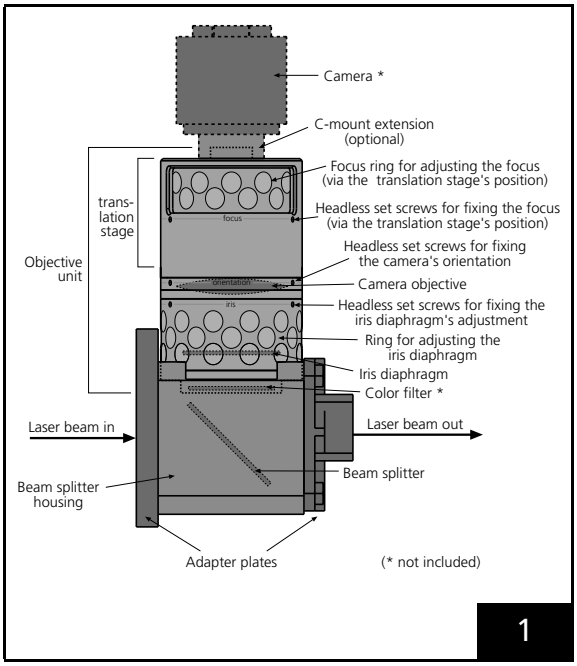

Schematic overview of the camera adapter

The two adapter plates serve as interfaces for mounting the camera adapter between scan head and laser flange.
The holes of the adapter plate for attaching the scan head to the camera adapter's beam-exit side are compatible with mounting holes of the *SCAN*cube or excelli*SCAN* scan heads from SCANLAB.

To facilitate observation, the beam splitter housing contains a dichroic beam splitter that couples light exiting the illuminated working field. The laser wavelength is allowed to travel unhindered, but illumination wavelengths reflected from the working plane are decoupled to the camera.

The objective unit attached to the beam splitter housing's upper side contains a camera objective, an adjustable iris diaphragm and a translation stage. A camera can be attached to the flange with C-mount thread on the objective unit's upper side. The objective unit's underside contains a threaded notch for attaching a color filter.

The light decoupled by the beam splitter is directed through the camera objective and onto the active imaging surface of the camera (e.g. CCD chip).
Camera image focusing is achieved manually by rotating the translation stage's focus ring. The adjustable iris diaphragm and provision for a color filter are intended for optimizing image quality. Performed translation-stage and iris-diaphragm adjustments can be fixed via the corresponding group of three set screws.
Additionally, the orientation of the camera (positionable around the objective's optical axis) can be fixed via three set screws.

The orientation of the beam splitter and its housing (relative to the two adapter plates) can also be adjusted so that the housing's opening points down or sideways instead of up.

2.3 Observation Field Size

The size d_v of the observation field, i.e. the size of the portion of the working field visible to the camera, can be calculated via the camera chip's size d_c, the scan objective's focal length f_{so} and the camera objectives focal length f_{co} at the used observation wavelength, in accordance with the following formula:

$$d_v = d_c \cdot f_{so} / f_{co}$$

For example, a camera objective with f_{co} = 105 mm, a scan objective with f_{so} = 160 mm and a 1/2'' chip (6.4 mm x 4.8 mm[(1)]) produce a 9.7 mm x 7.3 mm observation field.

Diverse apertures in the system (e.g. beam entrance, mirror, iris diaphragm, objective apertures) can substantially reduce observation field edge brightness, particularly in conjunction with large imaging chips and camera objectives of short focal length.

2.4 Observation Field Position

The position of the observation field is adjusted by moving the scan head's deflection mirrors. Ideally, the observation field is centered with respect to the laser's point of arrival. However, mechanical tolerances and laser beam adjustment errors can result in an offset (that is constant across the entire observation field). Moreover, the scan objective's chromatic aberration can produce an additional offset which increases with increasing difference between the laser's wavelength and the illumination wavelength. This additional offset is null at the working field's centerpoint and increases radially toward the edge of the working field.

2.5 Imaging Quality

Working-field illumination light reaching the scan head's scan objective will exit more or less parallel, and (with the exception of laser-wavelength light) be deflected by the dichroic beam splitter to the camera objective. The decoupling efficiency is somewhat reduced for the wavelength range used by pointer lasers: although the beam splitter decouples a large part of the laser power and passes it to the camera, a small part is transmitted. Therefore, the pointer is visible in the working field, although attenuated.

After reflection at the beam splitter, the light is directed through the camera objective onto the camera's active imaging surface (e.g. a CCD chip). Camera image focusing is achieved manually by rotating the focus ring to adjust the distance between the camera objective and the camera. Imaging quality can be further optimized by adjusting the iris diaphragm's opening.

Camera image quality is also heavily influenced by the scan objective's properties and working field illumination. Unlike camera objectives, scan objectives are generally not color-corrected and produce relatively large color errors. Therefore, illumination should be restricted to as narrow a wavelength range as possible (e.g. LEDs at 880 nm); otherwise an indistinct image will be produced. The light's bandwidth should be further narrowed by placing a color or interference filter between the beam splitter and the camera, though this attenuates camera image brightness. Additionally, the illumination wavelength should not differ too widely from the laser wavelength. On selecting the scan system, also take care, that the scan mirrors' reflectivity for the illumination wavelength is high enough. With dielectric mirrors the pointer laser range (630 nm - 670 nm) often can be used for illumination. Please refer to the specifications of your scan system's scan mirrors.

Resolution is affected not only by the optics, but also the camera chip pixel size.

(1) For historical reasons, the chip name (in inch) does not agree with the real chip size. Typical chip sizes are:
1/3'' chip: 4.8 mm x 3.6 mm
1/2'' chip: 6.4 mm x 4.8 mm
2/3'' chip: 8.8 mm x 6.6 mm

3 Installation

Follow each step for preparation, mounting and electrical connection in the correct order as described in this chapter.

Danger!

- Make sure all components of the system (laser, scan system, controller, power supply, computer) are switched off before installation.
- After the camera adapter and the scan head has been mounted, there is a cone-shaped hazardous laser output area. Do not stare into the laser or its deflected radiation. Keep all parts of the body away from the laser beam.

Caution!

- Carefully take the camera adapter out of the packaging.
- Protect the camera adapter from dust and other contaminants.
- Never touch the beam splitter's optical surfaces.
- Follow the procedures in chapter 5.1 for periodically checking and cleaning the optics.

3.1 Checking the Specifications

Make sure the specifications of the camera adapter meet the requirements of your application (see "Technical Specifications" on page 20). If your application requires other specifications, then please contact SCANLAB.

3.2 Dimensions

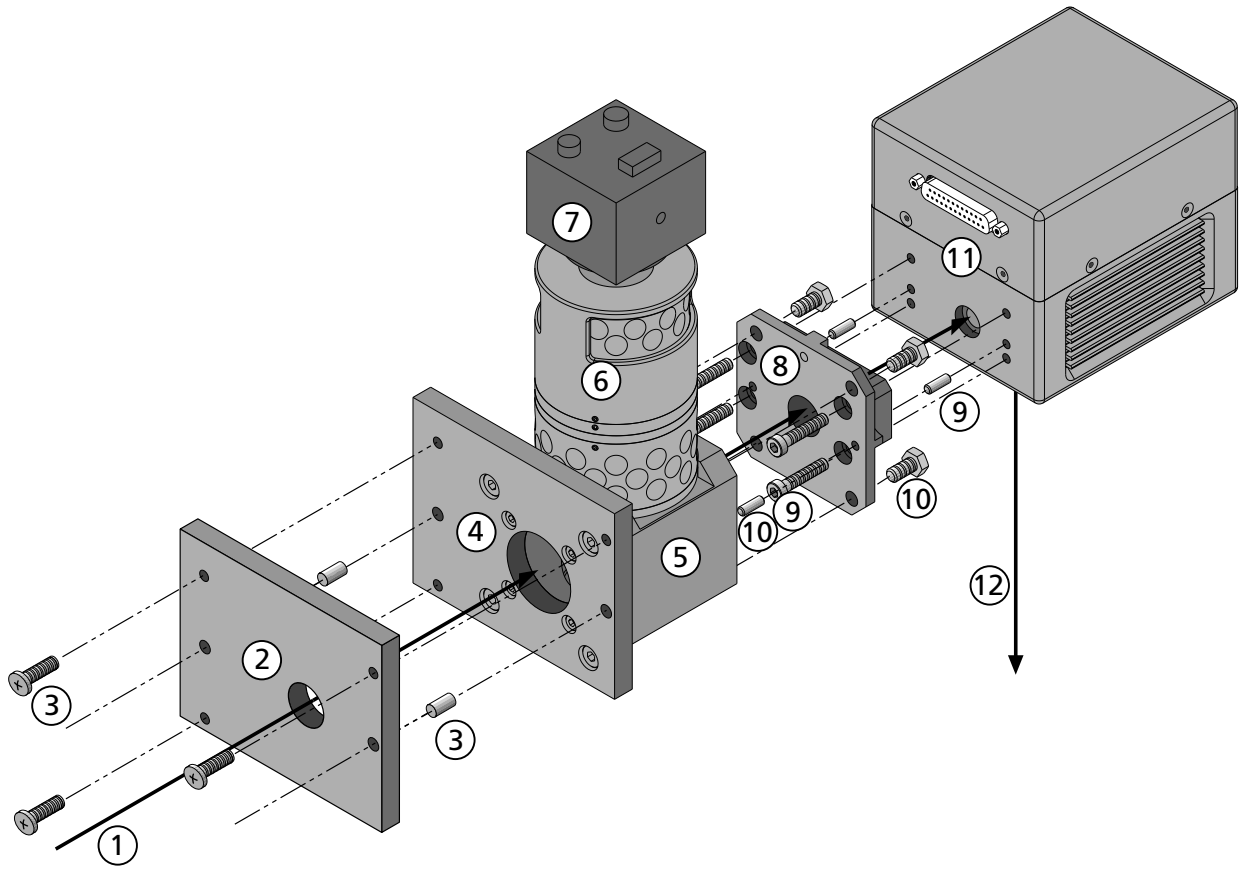

Legend

1 Beam in
2 Laser flange *
3 Mounting screws * and alignment pins * for mounting at the laser flange
4 Adapter plate (beam-entrance side)
5 Beam splitter housing
6 Objective unit
7 Camera *

(* not included)

8 Adapter plate (beam-exit side)
9 Mounting screws and alignment pins for mounting the beam-exit side adapter plate to the scan head
10 Mounting screws and alignment pins for mounting the beam-exit side adapter plate to the beam splitter housing
11 Scan head* (in this example a *SCAN* cube)
12 Emerging beam

2

Camera adapter with mounting components

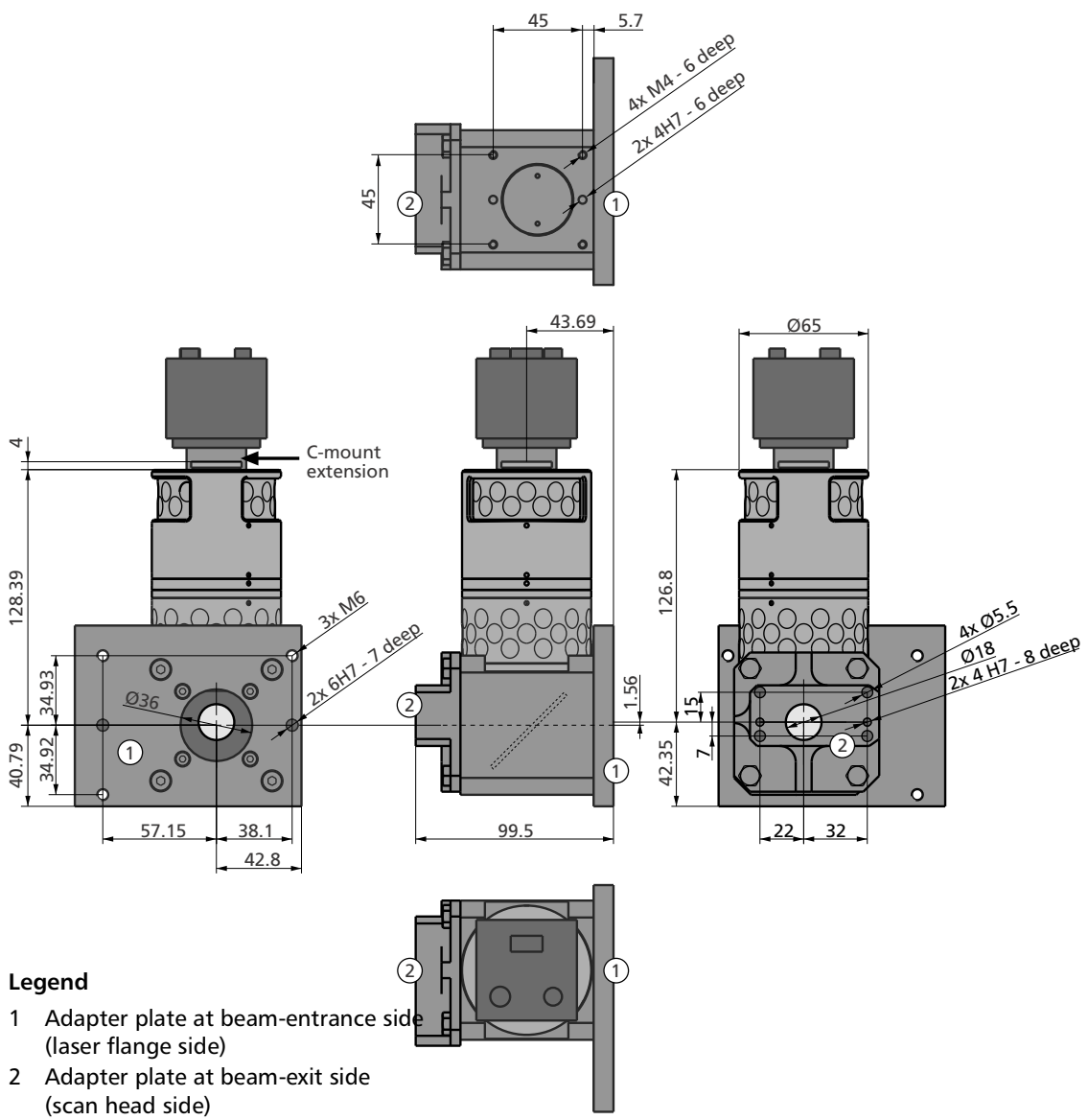

Legend

1 Adapter plate at beam-entrance side (laser flange side)

2 Adapter plate at beam-exit side (scan head side)

3

Dimensions of the camera adapter (with beam displacement 1.56 mm, all dimensions in mm)

3.3 Mounting the Camera Adapter

The illustrations for this section are found in the previous section, starting on page 8. Figure 2 shows the camera adapter with its mounting assembly and dimensions. The laser system flange, alignment pins and mounting screws are not included in the package.

The two adapter plates facilitate attachment of the camera adapter to the scan head and mounting of the camera adapter together with the scan head onto the laser flange.

The adapter plate for attaching the scan head to the camera adapter's beam-exit side is equipped with bore holes compatible with the mounting holes of the *SCAN*cube or excelli*SCAN* scan heads from SCANLAB.

Note: SCANLAB also offers a beam-exit side adapter plate equipped with bore holes compatible with the mounting holes of the hurry*SCAN*, hurry*SCAN II*, intelli*SCAN* or *SCAN* gine scan heads.

The two adapter plates and the beam entrance and exit are oriented relative to another so as to compensate the beam displacement produced by the beam splitter (see figure 3 on page 9). That means a laser beam that enters centered (perpendicular to the beam entrance plane) will also exit centered at the beam exit side. Of course, the beam displacement is also compensated for camera monitoring.

1. Mounting to the Scan Head

The camera adapter should first be mounted onto the scan head. Therefore, first attach the camera adapter's beam-exit side adapter plate to the scan head, and afterward the beam splitter housing to this adapter plate.

To facilitate mounting at the scan head, the beam-exit side adapter plate contains two 4^{H7} alignment holes and four 5.5 mm mounting holes. To facilitate mounting the beam splitter housing, the adapter plate contains four 4^{H7} alignment holes and four 6.6 mm mounting holes. Mount the camera adapter in the following manner:

- Carefully remove the protective cap at the beam exit side (e.g. with a small screwdriver).
- If the beam-exit side adapter plate is mounted on the beam splitter housing, then dismount it. The adapter plate is attached to the beam splitter housing via four M6 screws and two 4_{h6} alignment pins.
- Place two 4_{h6} alignment pins in the corresponding 4^{H7} alignment holes on the scan head or on the adapter plate.
- Place the adapter plate on the scan head so that the alignment pins line up with the alignment holes on the scan head and the adapter plate. The adapter plate's beam exit must be centered over the scan head's beam entrance (see figure 4).

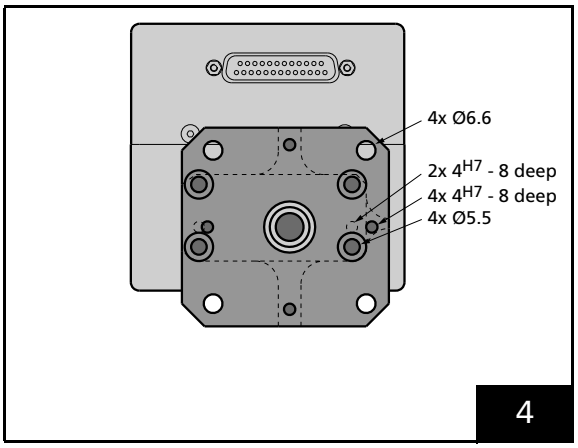

Beam-exit side adapter plate of the camera adapter, in this example at the *SCAN* cube 10's beam entrance side

- Fasten the adapter plate to the scan head by installing two mounting screws with M5 threads into the corresponding threaded mounting holes of the scan head.

- Afterward, fasten the adapter plate to the beam splitter housing by installing two 4_{h6} alignment pins and four mounting screws with M6 threads into the corresponding threaded mounting holes of the beam splitter housing.

2. Mounting to the Laser Flange

Next, the camera adapter with the scan head must be mounted to a laser system flange.

The beam entry position is defined by two 6^{H7} alignment holes. The laser beam axis must be identical with the laser input axis of the camera adapter. To ensure this alignment, the laser system flange must have appropriate holes to accommodate two 6_{h6} alignment pins and two M6-threaded mounting screws.

In positioning the scan head and camera adapter relative to the image field, the displacement of the emerging-beam axis relative to the entry-beam axis must be taken into account (see figure 3 on page 9).

Mount as follows:

- Carefully remove the protective cap at the camera adapter's beam entrance side (e.g. with a small screwdriver)
- Place two 6_{h6} alignment pins in the corresponding 6^{H7} alignment holes on the flange or on the adapter plate.
- Place the camera adapter together with the scan head on the flange so that the alignment pins line up with the alignment holes on the flange and the adapter plate. This way the camera adapter is aligned with respect to the laser.
- Fasten the camera adapter to the flange by installing two mounting screws with M6 threads into the corresponding threaded mounting holes of the adapter plate.

Caution!

- To align and fasten the camera adapter, only use the alignment and mounting holes depicted in figure 3 on page 9. Other holes cannot be used for aligning and fastening the camera adapter or for any other purposes.

3.4 Adjusting the Objective Unit's Orientation

Typically, the beam splitter housing's opening and the objective unit of the delivered camera adapter point upward. If cable-layout conflicts or other reasons necessitate another direction, then the beam splitter and its housing can be adjusted to point sideways or down instead of up.

Thereby, independent of the objective unit's selected orientation, the relative orientation of the two adapter plates (i.e. the relative orientation of beam entrance and exit) remains so that the beam displacement produced by the beam splitter will be compensated. This even applies if the two adapter plates are additionally rotated relative to another.

Caution!

- Perform the described adjustment only in a clean, dust-free environment.
- Never touch the beam splitter's optical surface. When disassembling/assembling, exercise particular care not to damage the beam splitter.
- Dirt on the beam splitter can increase the absorption of laser power by its optical surfaces. Burned-in dirt can lead to destruction of the beam splitter and further consequences.

Proceed as follows (also see figure 5 on page 12):

- If the camera adapter is already mounted on the scan head or flange, then dismount it.
- Unscrew both of the beam splitter housing's adapter plates (each is attached to the housing via four M6 screws and two 4_{h6} alignment pins. The beam-splitter block (which contains the dichroic beam splitter) is attached to the "inward" side of the beam-entry-side adapter plate. When detaching the adapter plates, carefully remove the beam-splitter block from the beam-splitter housing.
- Unscrew the beam-splitter block from the beam-entry-side adapter plate. The beam-splitter block is attached to the adapter plate via four M4 screws and two 3_{h6} alignment pins.
- Next, the beam-splitter and its housing can be placed into the desired orientation relative to the two adapter plates. Here, it is important to maintain the original relative orientation and thus avoid difficulties when remounting to the scan head or laser flange. The beam-splitter block and housing must retain their relative orientation, too, so that the beam splitter's surface points toward the camera.
- The four components must then be mounted in the desired orientation. First attach the beam-splitter block to the beam-entry-side adapter plate via the two 3_{h6} alignment pins and four M4 screws. Next insert the 4_{h6} alignment pins into the beam-splitter housing's alignment holes. Then attach the beam-entry-side adapter plate to the beam-splitter block and the beam-exit-side adapter plate to the beam-splitter housing (each via four M6 screws).

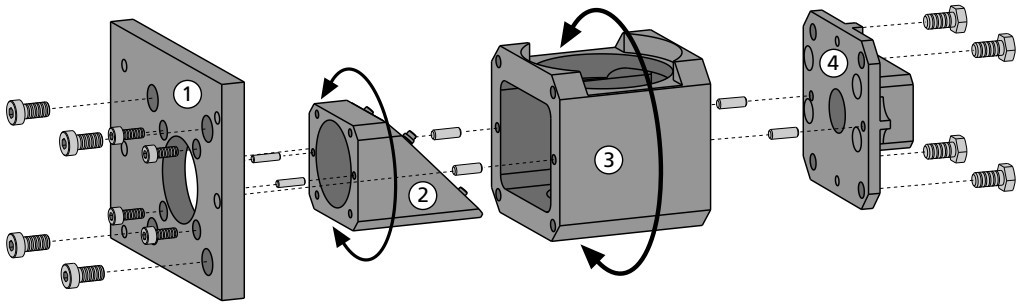

Legend

1 Adapter plate at beam-entrance side
2 Beam-splitter block
3 Beam-splitter housing
4 Adapter plate at beam-exit side

5

Adjusting the objective unit's orientation

3.5 Mounting a Camera

A camera is not included in the delivered package. It can be selected according to customer requirements.

The camera should be sensitive to the illumination wavelength. Be especially sure the camera doesn't contain an internal filter that unintentionally attenuates light at the illumination wavelength. Some cameras, for instance, are equipped with internal filters that restrict the usable wavelength range to that of visible light. Here, observation at wavelengths such as 880 nm would be nearly impossible.

To facilitate mounting a camera, the objective unit's upper side contains a flange with a C-mount adapter. For adjusting the distance between the camera and camera objective, one or more C-mount extensions are generally included in the delivered package. The camera and optional C-mount extensions can be simply threaded onto the objective unit's top side. Supplied C-mount extensions are already mounted.

Adjustment of the camera is described in chapter 4.4, page 17.

3.6 Providing Illumination

Illumination of the working field is not part of the delivered package and can be chosen in accordance with customer requirements.

Illumination should be restricted to as narrow a wavelength range as possible (e.g. LEDs at 880 nm); otherwise the produced image could be indistinct, particularly at the edges (see chapter 2.5, page 6). The light's bandwidth should be further narrowed by placing a color or interference filter between the beam splitter and the camera, though this attenuates camera image brightness. Additionally, the illumination wavelength should not differ too widely from the laser wavelength. On selecting the scan system, also take care, that the scan mirrors' reflectivity for the illumination wavelength is high enough.

The lighting should be arranged to illuminate the observed field as homogenously as possible.

If there are any questions regarding the illumination, please contact SCANLAB (see page 19).

3.7 Mounting a Color Filter

Color filters are not included in the delivered package (this also applies to color filter retention rings and color filter mounts).

Color filter retention rings, e.g. for 1-inch and 2-inch color filters, as well as color filter mounts are optionally available from SCANLAB, find the relevant article numbers in the text below.

Color filters are supplied by the customer suiting the illumination and meeting the requirements. Color filters should be selected that have as narrow a transmission band as possible. The aperture of the color filter should be large enough to avoid vignetting.

Mounting a color filter requires unscrewing the complete objective unit from the beam-splitter housing. At the bottom of the objective unit the holding ring is screwed in.

For example, a 2-inch color filter (max. outer diameter 50.8 mm; thickness up to 4 mm) is inserted into its notch (height 6.5 mm). For fixation, a fitting color filter retention ring (SCANLAB article number 100092) has to be screwed into the M52 thread (see figure 6).
No part of color filter, color filter retaining ring and if applicable, color filter mount must protude from the range indicated by 13.5 in figure 6. Otherwise the optical elements are damaged.

1-inch color filters (max. outer diameter 25.4 mm; thickness 5.5 mm to 8 mm) are mounted by placing them into a color filter mount (SCANLAB article number 112910) first and then fixing it by a color filter retention ring (SCANLAB article number 107283) . Subsequently, this assembly is screwed into the M52 thread located at the bottom end of the objective unit. Make sure not to damage the optical elements.

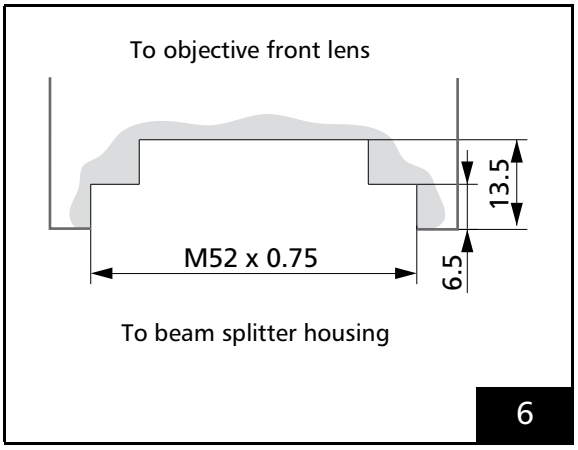

Bottom end of the objective unit. For example, an assembly of a 1-inch color filter, color filter retaining ring and color filter mount is screwed into the M52 thread.

3.8 Beam Dump when Using Higher Laser Powers

If the camera adapter is operated at a laser power of several 100 Watt or more, residual reflection at the beam splitter may lead to enhanced overheating or even to damages of the camera adapter housing (see also chapter 6, "Camera Adapter Specifications").

As a countermeasure, install a beam dump at the bottom side of the camera adapter to absorb the reflected part of the laser beam. Therefore, unscrew the scattering cover plate from the camera adapter's bottom side and install a beam dump at the threaded opening (see figure 7).

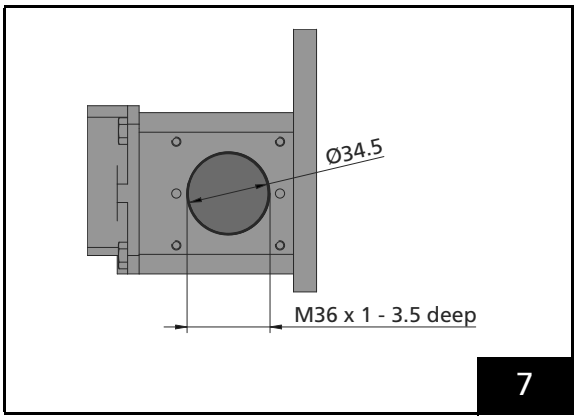

Bottom side of the camera adapter with threaded opening for a beam dump (delivery condition: closed by a scattering cover plate , see figure 3 on page 9).

3.9 Operating and Storage Conditions

For storage, operation and servicing, make sure the following environmental conditions are met:

- The storage temperature for the camera adapter should be between −35 °C and +60 °C.
- The operating temperature is 25 °C ± 10 °C.
- Protect the camera adapter from humidity, dust and corrosive vapors to avoid damage to the optical components.

4 Start-up and Operation

4.1 Checking the Installation

Before operating the camera adapter, carefully check the following:

- Were the mechanical installation and electrical wiring fully and correctly carried out as described in "Installation" on page 7?
- Is the camera adapter equipped with a suitable beam splitter and camera objective? Compare the technical specifications in chapter 6 with your application's requirements.
- Are all optical components clean and free of dust? If necessary, clean the optical components as described in "Routine Maintenance of the Optical Surfaces" on page 18

4.2 Checking the Laser Parameters

The camera adapter's beam splitter is designed for a laser beam with defined parameters.

- Compare the technical specifications on page 20 with the requirements of your application. For information on tolerances and deviations, please contact SCANLAB.
- Verify that the input beam wavelength, the input beam diameter and the maximum laser power are compatible with the specifications of the camera adapter and the scan head.

4.3 Adjustment of the Laser Beam

To ensure optimum performance of the scan system, it is crucial that the laser beam and the camera adapter together with the scan head are precisely aligned with respect to each other. Incorrect alignment might lead to the following effects:

- vignetting of the laser beam
- a large, irregular spot
- arbitrary translation of the image field

In most cases, vignetting will be the predominant effect. Vignetting occurs if the laser beam is not able to fully pass through or be reflected by the optical components. Part of the beam's diameter will be cut off, resulting in power loss and possible system damage due to excessive absorption of laser power.

To avoid significant vignetting, the system must be aligned as precisely as possible, particularly in terms of the beam position relative to the scan head's optical axis. If the laser beam profile is Gaussian, the maximum tolerances appropriate for most applications are:

- tilt of the laser beam: < 5 mrad
- displacement: < 0.3 mm

If you use a laser with "flat top" beam profile, it can be necessary to align the system with even higher precision. Avoid vignetting especially for a high power laser. Align carefully and – if necessary – reduce the beam diameter to an appropriate value.

Danger!

- Do not stare directly into the laser beam or at any of its deflected radiation. Keep all parts of the body away from direct contact with the laser beam or any of its deflected radiation.
- Adjust the beam path by means of a laser with a laser class not higher than 2. If this is not possible, the laser should be operated at the lowest power. Avoid dangerous deflected radiation!

4.4 Optimizing Image Quality

Camera Orientation

The image is rotated relative to the working field as a consequence of beam deflection at the scan mirrors and beam splitter. To compensate this rotation, at least in the scan mirrors' neutral position, the mounted camera can be rotated around the camera objective's axis. The desired camera orientation can then be fixed via three set screws (see chapter 2.2, page 5).

Distance between Camera and Camera Objective

Camera image focusing is achieved manually by rotating the focus ring to adjust the distance between the camera objective and the camera (via the translation stage). The distance can be thereby varied about ±6 mm. Performed focusing adjustments can be fixed via three set screws (see chapter 2.2, page 5).

Unlike camera objectives, scan objectives are generally not color-corrected and produce relatively large color errors. Therefore, the scan objective's focal length and the subsequent distance between the camera and camera objective are strongly influenced by the illumination wavelength. Generally, the scan objective's focal length increases with higher wavelengths. Longer wavelengths therefore generally require a larger distance between the camera objective and camera. When required, the distance can also be varied via various C-mount extensions (see chapter 3.5, page 13). Note, that supplied C-mount extensions are already mounted and may need to be removed.

As a starting point for distance adjustment, the C-mount extensions included in the delivered package should be combined such that the sum of the extensions is as close as possible to the recommended C-mount extension value (see technical specifications on page 20). If rotation of the focus ring doesn't result in a sharp image, then it might be necessary to use a different combination of the included C-mount extensions or possibly other C-mount extensions. If required, the following C-mount extensions are available from SCANLAB: 5 mm, 11 mm and 22.1 mm.

Iris Diaphragm

Further optimization of image quality can be achieved by adjusting the built-in iris diaphragm's opening. Performed iris diaphragm adjustments can be fixed by three set screws (see chapter 2.2, page 5).

Note that a narrower iris-diaphragm opening results in a sharper but darker image with vignetting at the edges.

Illumination

The illumination, too, strongly influences image quality (see chapter 2.5, page 6 and chapter 3.6, page 13).

5 Routine Maintenance and Customer Service

5.1 Routine Maintenance of the Optical Surfaces

A dirty camera objective or beam splitter diminishes camera image quality.

In addition, dirt on the beam splitter can increase the absorption of laser power by its optical surfaces. Burned-in dirt can lead to destruction of the beam splitter and further consequences. The warranty does not cover any damage due to improper use, cleaning or handling.

Caution!

- Never touch the optical surfaces of the beam splitter and camera objective.
- Conduct checking and perform cleaning only in a clean, dirt-free environment.

Routine Maintenance of the Beam Splitter

The beam splitter is an especially sensitive component and should not be touched or removed from the beam splitter block. Nevertheless, you must regularly inspect the beam splitter for dirt, dust and other contaminants.

For this purpose, the objective unit must be unscrewed from the beam-splitter housing and, under some circumstances, the camera adapter must be detached from the laser flange.

If inspection reveals dust particles on the beam splitter's surface, then remove them via an air jet with clean, oil-free air.

If the dust cannot be removed in this manner, or if inspection reveals more serious contamination, then contact SCANLAB for guidance. In extreme cases, the complete camera adapter must be returned to SCANLAB for inspection and cleaning of the beam splitter. However, in some situations SCANLAB might be able to recommend a user-performed special cleaning procedure.

Routine Maintenance of the Camera Objective

The outermost optical surfaces of the camera objective must be regularly inspected for dirt, dust and other contaminants.

For this purpose, the objective unit must be unscrewed from the beam-splitter housing and the iris diaphragm opened.

If inspection reveals dust particles on the beam splitter's surface, then remove them via an air jet with clean, oil-free air.

If the dust cannot be removed in this manner, or if inspection reveals more serious contamination, then contact SCANLAB for guidance. In extreme cases, the complete camera adapter must be returned to SCANLAB for inspection and cleaning of the camera objective. However, in some situations SCANLAB might be able to recommend a user-performed special cleaning procedure.

5.2 Customer Service

Servicing and Repairs

Except for routine maintenance of the optical surfaces, the camera adapter does not contain user-serviceable internal parts. All servicing and repairs should be performed only at SCANLAB. Only SCANLAB has the proper facilities and procedures to service and repair the camera adapter optimally.

Product Warranty

SCANLAB guarantees this product to be free of defects in manufacturing and material. The warranty is valid for 12 months after delivery. Repairs covered under the warranty will be performed at SCANLAB.

The scope of the warranty is limited to repair or replacement of the SCANLAB product.

SCANLAB is responsible for the return delivery of products repaired under warranty; the customer is responsible for delivery to SCANLAB.

SCANLAB will not be held responsible:

- when the product has been damaged through misuse or improper operation
- for damage due to improper laser power (e.g. focused beam on optical surfaces) or improper adjustment
- for damage to optical components (beam splitter, camera objective, etc.) caused by improper handling or cleaning
- for consequential damages
- if the camera adapter has been altered

If a returned camera adapter must first be brought into a serviceable state by SCANLAB (e.g. by removing alignment pins and other customer-added parts or cleaning the camera adapter) before servicing can begin, then the customer must bear the additional cost.

Contacting SCANLAB

For service, repairs, advice or information, simply contact SCANLAB using one of the contact possibilities listed below:

SCANLAB GmbH
Siemensstr. 2a
82178 Puchheim
Germany

Tel. +49 (89) 800 746-0
Fax: +49 (89) 800 746-199

info@scanlab.de
www.scanlab.de

Product Disposal

The camera adapter can be returned to SCANLAB for a fee to be properly disposed of in compliance with environmental regulations.

6 Camera Adapter Specifications

Article number (objective unit, beam splitter housing incl. beam splitter and two adapter plates)	**127502**
Beam splitter	
Laser wavelength	1030 nm - 1110 nm (1)
Range for observation wavelength	450 nm - 900 nm (1)
Laser data	
Wavelength	1030 nm - 1110 nm
Beam diameter	see scan head manual, max. 30 mm
Max. allowed average laser power without beam dump. See also chapter 3.8, page 15 and scan head manual.	400 W
Max. allowed average laser power with beam dump. See also chapter 3.8, page 15 and scan head manual.	5000 W
Max. allowed laser power density continuous wave. See scan head manual.	4000 W/cm²
Damage threshold for pulsed operation (with specified laser wavelength, pulse length 10 ns). See scan head manual.	1 J/cm²

Camera objective	
Wavelength	450 nm - 950 nm
Focal length	105 mm
Camera	
Connection type	C-Mount
Maximum chip size	2/3“ (2)
C-mount adapter	
Typical extension (3) at 880 nm	11 mm
Included with delivery	11 mm
Weight	
Without camera	1.6 kg
Operating and Storage Conditions	
Operating temperature	25 °C ± 10 °C
Storage temperature	−35 °C to +60 °C
Environmental conditions	non-condensing, non-corrosive

(1) The scan system’s mirrors must sufficiently reflect both the laser wavelength and the observation wavelength. Please note the corresponding technical specifications in the manual of your scan system.
(2) The observation field size cannot be considerably enlarged by using a larger camera chip as vignetting would occur at the border of such large image fields.
(3) Valid at the specified wavelength. At other wavelengths or objectives, this value can change, see chapter 4.4, "Optimizing Image Quality" on page 17.