Installation and Operation

basiCube 10

digital SL2-100

Doc. Rev. 1.13 e

May 3, 2022

SCANLAB GmbH
Siemensstr. 2a
82178 Puchheim
Germany

Tel. +49 (89) 800 746-0
Fax: +49 (89) 800 746-199

info@scanlab.de
www.scanlab.de

© SCANLAB GmbH 2022

(Doc. Rev. 1.13 e - February 16, 2022)

SCANLAB reserves the right to change the information in this document without notice.

No part of this manual may be processed, reproduced or distributed in any form (photocopy, print, microfilm or by any other means), electronic or mechanical, for any purpose without the written permission of SCANLAB.

All mentioned trademarks are hereby acknowledged as properties of their respective owners.

Table of Contents

1 Introduction ... 5
1.1 Product Overview ... 5
1.2 Unpacking Instructions and Typical Package Contents ... 6
1.3 I.D. Plate ... 6

2 Principle of Operation ... 7
2.1 Dynamic Positioning Laser Beams ... 7
Customized Optical Configuration ... 7
2.2 Scan Head Control ... 8
Data Transmission between the Controller and the Scan Head ... 8
Position Signals, Image Field and X-Y Reference System ... 9
Status Signals ... 10

3 Safety During Installation and Operation ... 11
3.1 Operational Guidelines and Standards ... 11
3.2 Laser Safety ... 12
3.3 Electrical Safety ... 14

4 Installation ... 15
4.1 Checking the Specifications ... 15
4.2 Mounting the Objective ... 15
Objective Holder ... 15
Objective ... 16
4.3 Layout and Dimensions ... 17
4.4 Mounting the Scan Head ... 21
4.5 Electrical Connections ... 21
Power Supply ... 22
Data Cable Guidelines ... 23
Y Cable (optional) ... 24
4.6 Operating and Storage Conditions ... 25

5 Start-up and Operation ... 26
5.1 Checking the Installation ... 26
5.2 Checking the Laser Parameters ... 26
5.3 Adjustment and Alignment ... 27
5.4 Checking the Parameters of Application Software ... 28
5.5 Safe Start-up and Shutdown Sequences ... 28

6 Optimizing the Application ... 29
6.1 Dynamic Positioning with Galvanometer Scanners ... 29
Positioning Speed ... 29
Processing Speed ... 29
Tracking Error (Time Lag) ... 29
6.2 Optimum Environmental Conditions ... 30
6.3 Process Monitoring ... 30
Software Monitoring ... 30
Optical Process Monitoring ... 30

7 Routine Maintenance and Customer Service ... 31
7.1 Routine Maintenance of the Optical Surfaces ... 31
Routine Maintenance of the Mirrors ... 31

Routine Maintenance of the Objective's Optical Surface 32
7.2 Customer Service 33
Servicing and Repairs 33
Product Warranty 33
Contacting SCANLAB 33
Product Disposal 33
8 Troubleshooting 34
9 Technical Specifications 35
9.1 EU Declaration of Conformity 38

1 Introduction

This operating manual describes the basiCube 10 scan head.

The manual is a part of the product. Please read these instructions carefully before you proceed with installing and operating the scan head. In particular observe all safety guidelines in this manual. If there are any questions regarding the contents of this manual, please contact SCANLAB (see page 33).

Keep the manual available for servicing, repairs and product disposal. This manual should accompany the product if ownership changes hands.

SCANLAB reserves the right to update this operating manual at any time and without notification.

1.1 Product Overview

The basiCube 10 scan head is equipped with a 10 mm aperture and is designed for positioning laser beams with different wavelengths. The possible wavelengths with the corresponding basiCube 10 article numbers are shown in the table below.

Wavelength	Article number
355 nm	135988
450 nm - 2500 nm	140520
532 nm	135989
1030+515+343 nm	143923
1064 nm	135777
HP 10600 nm	135990

Your scan head's appropriate wavelength is listed on its I.D. plate (see figure 1 on page 6).

The scan head is designed for digital signal transfer via the integrated digital interface.

The technical specifications of the product are summarized on page 35.

Note:

- The basiCube 10 can be optionally combined with a variety of objectives. The technical specifications of the respective scan-head/objective combination are given in a separate datasheet.

1.2 Unpacking Instructions and Typical Package Contents

- Carefully remove the scan head from the package.
- Protect the scan head from dust and other contaminants.
- Keep the packaging, so that in case of repair the scan head can be properly repackaged and returned to SCANLAB.
- Also remove all other articles from the package. Check that all parts have been delivered. Please refer to the corresponding packaging list.
  A scan head package typically includes a product test protocol with test data. For mounting an objective an objective mounting set may be included in the package or already mounted to the scan head. For controlling the scan head, an RTC control board may be included in the package.

1.3 I.D. Plate

The scan head's I.D. plate (see figure 1) with the scan head's serial number and appropriate wavelength is found on the housing.

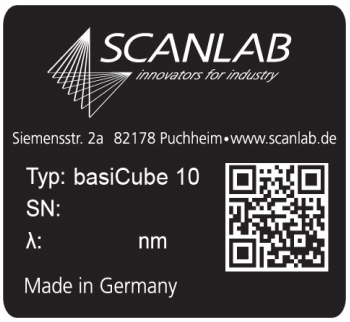

1

I.D. plate with serial number (SN) and wavelength (λ)

The I.D. plate's QR code supplies the following information:

- Scan head serial number
- Appropriate wavelength of scan head
- Link to SCANLAB website

In addition, the electrical connector is marked with the voltage to be applied (15 V).

2 Principle of Operation

2.1 Dynamic Positioning Laser Beams

The primary tasks of an X-Y scan head are to deflect a laser beam in the X-Y directions and to focus the beam onto the working plane.

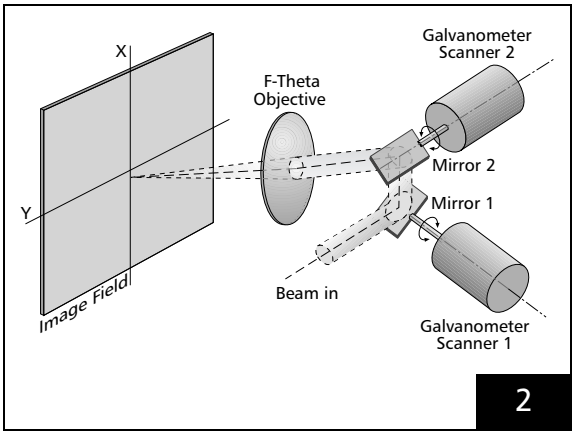

Basis of Operation: beam deflection via two galvanometer scanners

The beam deflection task is realized with the help of two tiltable deflection mirrors (see figure 2). The beam enters the scan head through the input aperture and is first deflected in the Y direction by mirror 1 attached to galvanometer scanner 1. The beam then goes on to be deflected in the X direction by mirror 2 attached to galvanometer scanner 2. The resulting deflection angles can be precisely and high-dynamically adjusted by controlling the positions of the galvanometer scanners.

Focusing the beam onto the working plane can be achieved with the help of a scan lens fitted to the scan head's beam exit hole. If an F-Theta objective is used, the position of the focal point on the image field will be directly proportional to the angle of incidence of the beam.

Alternatively, focusing of the beam can be realized with the help of a dynamic focusing system (for instance, SCANLAB's vario*SCAN* 20) positioned in front of the scan head's entrance aperture.

Customized Optical Configuration

To obtain optimum optical performance for a particular laser application, the scan head's optical configuration must meet the requirements of the application and the used laser system. To achieve optimum reflectivity at the mirrors, SCANLAB therefore selects mirror coatings appropriate for the wavelength and power of the user's laser. The size of the mirrors or the scan head's aperture is selected in accordance with the desired spot size and scan speed. The spot size is also influenced by the objective, which is also selected in accordance with the desired field size (or working distance A between the laser input and the image field) as well as the wavelength and power of the user's laser.

The user, on the other hand, has to ensure that the parameters of the entering laser beam (wavelength, power density and diameter) match the specifications of the scan head.

First, the coatings of the deflection mirrors are designed for a defined wavelength or wavelength range. If the wavelength of the employed laser deviates from the specified value, the mirrors will not work properly and can be destroyed.

Second, the mirror coatings also have a defined laser rating. If the specified values are exceeded, destruction of the coatings might result (also see section "Checking the Laser Parameters", page 26).

In addition, the deflection mirrors are intended for a specific beam diameter and a maximum allowed scan angle. If the beam diameter or the scan angle exceeds the specified maximum values, vignetting of the beam can occur. The beam is then no longer fully deflected by the mirrors or can no longer fully pass through an objective. A portion of the beam is then absorbed by the scan head, resulting in a loss of power density at the edges of the image field. Furthermore, the interior of the scan head and objective might be damaged due to the absorption of laser radiation.

The amount of possible power loss depends, among other things, on the beam profile of the employed laser. For a Gaussian beam profile, beam vignetting is insignificant when the scan angle of each mirror does not exceed the *maximum allowed scan angle* defined in chapter 9, page 35 and when the diameter of the beam doesn't exceed the specified aperture.

Caution!

- Make sure the aperture and the coatings of the deflection mirrors meet the requirements of your application (see "Technical Specifications" on page 35). For information on tolerances and deviations, please contact SCANLAB.
- Make sure that the focal length, the typical image field size and the wavelength of the objective meet the requirements of your application. If this is not the case, then please contact SCANLAB.
- Check if the wavelength of the input beam and the maximum ratings for beam diameter and laser power match the specifications of the scan head (see page 35).
- When using scan angles larger than the *maximum allowed scan angle* indicated on page 35, some vignetting inside the scan head and objective can occur and damage to the interior of the scan head might result. If your application requires larger scan angles, then please contact SCANLAB.
- The maximum allowed scan angle is derived from the geometric and optical data of the employed components (see section "Customized Optical Configuration" on page 7). In some cases, particularly with sufficiently small calibration angles, the maximum allowed scan angle can be larger than the maximum adjustable angle. In such cases, the specified maximum allowed scan angle has no practical relevance.

2.2 Scan Head Control

Data Transmission between the Controller and the Scan Head

The controller and the scan head are interconnected via a serial interface for digital data transfer. Data transmission follows the SL2-100 protocol. In the process, essentially the following signals are transferred:

- The controller delivers position values, i.e. (20-bit) set values for the X and Y axes.
- The scan head generates a status signal to be returned to the controller.

The scan head can be operated via a SCANLAB RTC5 or RTC6 control board but not via an older RTC board as an RTC3, RTC4 or RTC *SCAN*alone.

Position Signals, Image Field and X-Y Reference System

Position signals are digitally transferred from the controller to the scan head.

Figure 3 shows the definition of the X-Y reference system which is used for the position signals transmitted to the scan head. The orientation of the axes corresponds to the orientation used by the RTC boards from SCANLAB: The Y axis points in the opposite direction of the entry beam (and the Z axis in the opposite direction of the exit beam). Consequently: Scanner 1 deflects the beam in the Y direction, Scanner 2 in the X direction.

The scan head is calibrated in such a way that for a scan angle of 0.408 rad optically with excursion in the negative axis direction the bit-value "–503316" has to be transmitted, for the neutral position (null point) the bit-value "0", and for a scan angle of 0.408 rad optically with excursion in the positive axis direction the bit-value "+503316".

The maximum adjustable scan angle is (1 / 0.96) larger than the calibration angle. The input signal values for the maximum adjustable image field points (see figure 3) are listed in the following table.

Position	X Bit-Value (CHAN2)	Y Bit-Value (CHAN1)
0	0	0
1	524287	0
2	524287	524287
3	0	524287
4	–524288	524287
5	–524288	0
6	–524288	–524288
7	0	–524288
8	524287	–524288

Vignetting can occur at a particular scan angle dependent on the specific scan head and objective. The laser beam is then partially blocked within the scan head or objective, which results in transmission losses. The higher the power loss, the greater is the risk of damage to the scan system. In view of this, the technical specifications on page 35 include not only the calibration angle, but also the maximum allowed scan angle. This is not the same as the maximum adjustable scan angle. To avoid scan system damage, make sure the maximum allowed scan angle is never exceeded.

The maximum allowed scan angle is derived from the geometric and optical data of the employed components (see the section "Customized Optical Configuration" on page 7). In some cases, particularly with sufficiently small calibration angles, the maximum allowed scan angle can be larger than the maximum adjustable angle. In such cases, the specified maximum allowed scan angle has no practical relevance.

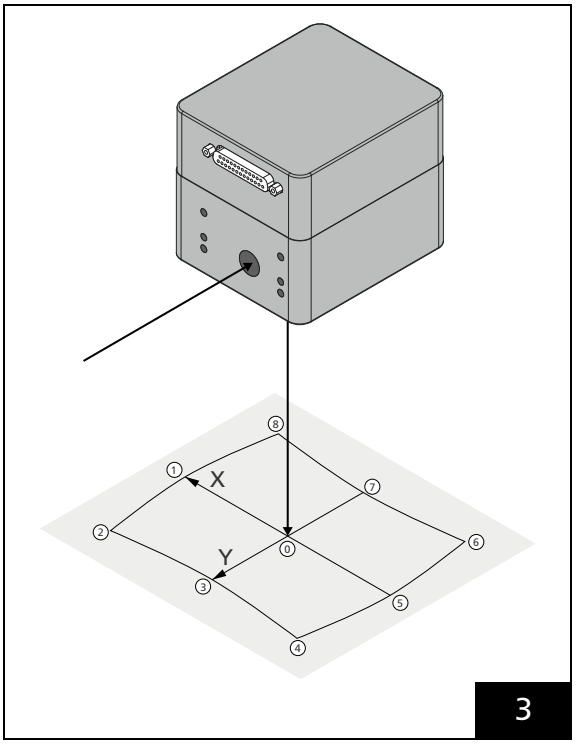

Positions in the image field

Figure 3 also depicts the pillow-barrel-shaped distortion of the square image field and shows the orientation of this distortion with reference to the axes. The field distortion is caused by the beam path within the scan head and by the characteristics of the objective. It must be compensated by the controller.

If you use a SCANLAB RTC control board for controlling the scan head, the field distortion is compensated automatically. Before data values are transferred to the scan head, the values are transformed by the RTC boards with the help of a correction table. A correction table specific for your system is included in the RTC software package or can be ordered from SCANLAB (also refer to the RTC manual). You can use positive and negative coordinate bit-values (−524288 to +524287) of an ideal image field, based on the reference system shown in Figure 3 on page 9, with the origin (zero point) in the center of the image field. The RTC board calculates the corresponding input values and transfers them to the scan head. The correction table appropriate for your specific system is included in the RTC software packet or can be ordered from SCANLAB (also see the RTC manual).

The image field size, as well as the working distance A between the input laser beam and the nominal working plane, depend on various factors – among them the focal length of the objective and the aperture of the scan head. The divergence of the input beam also has an influence on the working distance A.

When used with a collimated input beam, the basiCube 10 in combination with a delivered objective with working distance A produces a typical usable square image field (see "Technical Specifications" on page 35).

Calculation of the typical image field size is based on a scan angle of ±0.349 rad optical. Possible image field limitations due to vignetting or imaging deficits are considered (see section "Customized Optical Configuration" on page 7). Calibration angles big enough to produce larger-than-specified image fields might be possible in some cases. To avoid scan system damage, make sure the maximum allowed scan angle is never exceeded.

Status Signals

The scan head provides a PWROK status signal (i.e. "Power OK") available via the SL2-100 protocol. If you use an RTC control board, then this status signal can be evaluated via the **get_head_status** or **get_value** commands.

The PWROK signal indicates the status of the power supply. Upon power-up, the PWROK signal is initially 0. After less than one second (when the electronic components have reached a stable operating state) the PWROK signal then switches to 1.

PWROK = 0 signifies a problem in the power supply or a protective action by the electronics. If, upon powering up, the PWROK signal doesn't switch to 1 within a second or if the signal switches from 1 to 0 during operation, then **the laser must be turned off immediately**. Under some circumstances the system could deflect the laser beam in an unintended direction, which may cause health hazards and severe equipment damage. The system should be checked immediately to determine the cause.

Switching of the PWROK status signal from 1 to 0 during operation can be caused, for example, by a defective power supply (also see section "Power Supply" on page 22).

3 Safety During Installation and Operation

To reduce the risk of injury, please observe the following guidelines.

The safety and warning notices in this manual are indicated by a symbol set against a gray background:

Instructions that may affect a person's health are marked with a warning triangle next to the word "Danger".

Instructions that recommend appropriate use of this device or warn of damage that may occur to it are identified by a circle with an "X" in it, next to the word "Caution".

3.1 Operational Guidelines and Standards

When operating the scan head, the following guidelines and standards should be followed:

- 2006/42/EU
  Machinery Directive
- 2014/30/EU
  Electromagnetic Compatibility Directive
- 2014/35/EU
  Low Voltage Directive
- ISO EN11553-1 (2009)
  Safety of Machinery - Laser Processing Machines - Part1: General Safety Requirements
- EN60204-1 (2006)
  Safety of Machinery – Electrical Equipments of Machines, Part1: General Requirements
- EN60825-1 (2015)
  Safety of Laser Products, Part1: Equipment Classification, Requirements and User's Guide
- EN60825-4 (2011)
  Safety of Laser Products, Part4: Laser Guards

Additional application-dependent guidelines and standards may apply.

Complying with the Relevant Standards for the CE Label

The basiCube 10 is delivered as an OEM component conceived of for integration into a laser scan system.

The system manufacturer bears the responsibility for complying with the standards and guidelines required for equipment usage and for the CE label.

Scan Head Conformity to EC Guidelines

The scan head is in conformance with the EC guidelines 2011/65/EU (RoHS) and 2014/30/EU (EMC) (see chapter 9.1, "EU Declaration of Conformity" on page 38).

Electromagnetic fields that exceed the EMC standards can affect the operation and operating safety of the scan head and therefore require special shielding.

3.2 Laser Safety

This scan head is designed to be operated in conjunction with a laser. Therefore, all applicable rules and regulations for safe operation of lasers must be known and applied when installing the scan head and operating the system in which it is used. Since SCANLAB has no influence over the employed laser or the overall system, the customer is solely responsible for the laser safety of the entire system.

Danger!

- Safety regulations may differ from country to country. The customer bears sole responsibility for compliance with all applicable safety regulations of their respective regulatory jurisdiction.

Shutter

The scan head has no shutter and there is no device to decrease the laser output power. It is the responsibility of the customer to include such a device in the system in a way as to comply with all regulations. The observance of laser safety must be ensured for the entire system.

Maintenance

During maintenance of the laser equipment, the class of the laser can increase. Therefore, the customer must take suitable protective measures.

Warning Symbols

The area where the emerging beam is harmful must be marked with a warning symbol indicating the class of the employed laser – in accordance with IEC 60825-1 laser safety requirements. In addition, a warning symbol must be placed at the emitting aperture of the laser system. The table on page 13 shows the appropriate warning symbols for the various laser classes specified by IEC 60825-1 (or EN 60825-1 / VDE 0837 T1).

Danger!

- During assembly or operation of the scan head, never stare directly into the laser beam or its deflected radiation. Keep all parts of the body away from the laser beam and its path. Routine maintenance should be performed as described in chapter 7.1 on page 31 and all safety instructions should be observed!
- Adjust the output beam path of the scan head by means of a Class 2 laser. If this is not possible, the laser should be operated at the lowest power. Avoid dangerous deflected radiation!
- The risk of hazardous deflected radiation can increase when optical instruments are used in combination with the scan head.
- Before checking the scan head, make absolutely certain that the laser and scan head are turned off!
- Cover the path of the laser beam via an appropriate protecting case to block laser radiation!
- Do not obstruct the movement of the scan head's mirrors in any way. When the scan head is turned on, the mirrors must not be touched at all!
- Closely follow all IEC 60825-1 laser safety requirements and other applicable accident prevention regulations of your respective regulatory jurisdiction.
- Wear appropriate eye protection at all times.
- Always turn on the PC controller and the scan head's power supply first before turning on the laser. Otherwise the laser beam might be reflected in an arbitrary direction.

Laser Classes Specified by IEC 60825-1 (or EN 60825-1 / VDE 0837 T1)

Visible Laser Radiation	Invisible Laser Radiation	Potential Hazards
LASER CLASS 1	LASER CLASS 1	Class 1: This laser radiation is not harmful; is eye-safe.
 LASER RADIATION DO NOT STARE DIRECTLY INTO THE BEAM WITH OR WITHOUT OPTICAL INSTRUMENTS LASER CLASS 1 M	 INVISIBLE LASER RADIATION DO NOT STARE DIRECTLY INTO THE BEAM WITH OR WITHOUT OPTICAL INSTRUMENTS LASER CLASS 1 M	Class 1 M: Exposure to this radiation is harmful to the eyes if optical instruments are used to reduce the cross section of the laser beam. If this is not the case, this laser radiation is not harmful; is eye-safe.
 Laser Radiation Do not STARE directly inTO the beam LASER CLASS 2		Class 2: This laser radiation is in the visible spectrum of 400 to 700 nm. Exposure to this radiation for less than 0.25 s is not harmful to the eyes. It is eye-safe due to the eye's natural aversion response and blink reflex.
 Laser Radiation DO NOT STARE DIRECTLY INTO THE BEAM WITH OR WITHOUT OPTICAL INSTRUMENTS LASER CLASS 2 M		Class 2 M: This laser radiation is in the visible spectrum of 400 to 700 nm. Exposure to this radiation is harmful to the eyes if optical instruments are used to reduce the cross section of the laser beam. If this is not the case, exposure to this radiation for less than 0.25 s is not harmful to the eyes and is eye-safe due to the eye's natural aversion response and blink reflex.
 LASER RADIATION AVOID EXPOSURE OF THE EYES LASER CLASS 3 R	 INVISIBLE LASER RADIATION AVOID EXPOSURE TO THE LASER BEAM LASER CLASS 3 R	Class 3 R: This laser radiation is harmful to the eyes. Eye exposure exceeds the maximum allowable value.

Visible Laser Radiation	Invisible Laser Radiation	Potential Hazards
 LASER RADIATION AVOID EXPOSURE TO THE LASER BEAM LASER CLASS 3 B	 INVISIBLE LASER RADIATION AVOID EXPOSURE TO THE LASER BEAM LASER CLASS 3 B	Class 3 B: This laser radiation is harmful to the eyes and in some cases to the skin.
 LASER RADIATION AVOID ANY EXPOSURE OF THE EYES OR THE SKIN TO DIRECT OR SCATTERED RADIATION LASER CLASS 4	 INVISIBLE LASER RADIATION AVOID ANY EXPOSURE OF THE EYES OR THE SKIN TO DIRECT OR SCATTERED RADIATION LASER CLASS 4	Class 4: This laser radiation is very harmful to the eyes and skin. Stray radiation can also be dangerous. This radiation can cause fire or explosion and the generation of toxic gases or vapors.

3.3 Electrical Safety

Power is furnished to the scan head by a user-supplied low voltage power supply. The power supply must meet the following mains insulation requirements:

- If the connectors are covered and cannot be reached without tools from the outside, single insulation between the mains and the low voltage circuit is sufficient. The mains insulation must be able to withstand a test voltage of 2 kV AC applied between the mains and the low voltage circuit.
- If the connectors can be reached from the outside, double or reinforced insulation between the mains and the low voltage circuit is necessary. The mains insulation must be able to withstand a test voltage of 4 kV AC applied between the mains and the low voltage circuit.

Additional application-dependent guidelines and standards may apply.

4 Installation

Follow each step for preparation, mounting and electrical connection in the correct order as described in this chapter.

Danger!

- Make sure all components of the system (laser, controller, power supply, computer) are switched off before installation.
- After the scan head has been mounted, there is a cone-shaped hazardous laser output area. Do not stare into the laser or its deflected radiation. Keep all parts of the body away from the laser beam.
- Always turn on the PC controller and the scan head's power supply first before turning on the laser. Otherwise the laser beam might be reflected in an arbitrary direction.

Caution!

- Carefully take the scan head out of the packaging.
- Objectives are fragile and can be damaged by mechanical pressure. Never place the scan head on top of the objective.
- Never touch the optical surfaces of the deflection mirrors or objective.
  Always use gloves and/or special lens cleaning tissues when handling the optical components.
- Protect the scan head and objective from dust and other contaminants.
- Follow the procedures in chapter 7.1 for periodically checking and cleaning the optics.

4.1 Checking the Specifications

Make sure the specifications of the scan head meet the requirements of your application (see "Technical Specifications" on page 35). If your application requires other specifications, then please contact SCANLAB.

4.2 Mounting the Objective

If the scan head is to be operated with an objective which is not factory-installed (or if an already-mounted objective is to be exchanged), then proceed as described in the following sections.

Objectives are mounted either directly or via an objective holder onto the housing's beam exit side. Many objectives require a mounting set, which (in addition to an objective holder) can include components for securing the objective and objective holder, as well as seal rings and space rings to ensure a safe distance between the objective and the deflection mirrors. Different objectives might require different mounting sets. Appropriate objective mounting sets are attached on the scan head, included with the objective, or obtainable from SCANLAB.

Objective Holder

If the objective mounting set includes an objective holder, install it as follows.

- Carefully remove (e.g. with a small screw driver) any protective covers from the scan head's objective opening.
- Lightly lubricate the objective holder's threads (e.g. with vacuum grease) to prevent cold welding of the objective holder to the housing.
- Screw the objective holder into the threads of the housing's beam exit side.

Objective

Caution!

- Before installing the objective, verify its compatibility with the mounted objective holder or beam exit threads. Otherwise, damage to the objective and scan head mirrors may result. In the event of questions, contact SCANLAB.

Before mounting, inspect the objective for scratches, lens defects and dirt. If necessary, clean as described in chapter 7.1 on page 31.

Mount the objective as follows:

- Carefully remove (e.g. with a small screw driver) any protective covers from the objective holder or the scan head's objective opening.
- Remove the protective cover from the objective's beam entrance side.
- Some setups require installation of one or more seal rings between the scan head or objective holder and the objective. Seal rings should be lightly lubricated (with vacuum grease). Otherwise, threading of the objective might be very difficult. Additionally, some setups require installation of one or more space rings between the scan head or objective holder and the objective to ensure a safe distance between the objective and the deflection mirrors. Check for corresponding accessories in the objective mounting set.

Caution!

- When installing the objective, ensure that all components of the corresponding objective mounting set are used. Failure to install included seal or space rings can lead to a mirror crash (resulting from inadequate distance between the deflection mirrors and the objective). Furthermore, the beam exit might not be optimally sealed.

- Some objectives are secured to their holders via screws (and washers). However, most objectives are directly screwed into the scan head or into the objective holder. Before screwing in the objec1064 nmtive, lightly lubricate its threads (e.g. with vacuum grease) to prevent cold welding between the objective and its holder.

4.3 Layout and Dimensions

Figure 4 shows the layout of the scan head with the electrical connector.

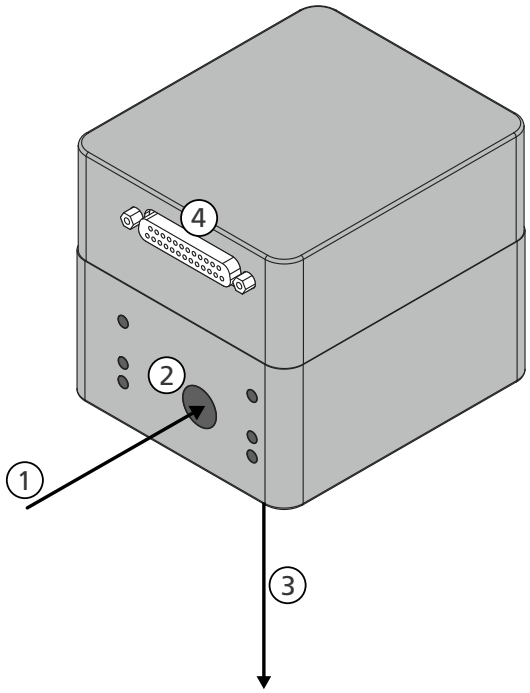

Legend

1 Entering beam
2 Beam entrance
3 Emerging beam
4 Electrical connection

4

Scan head overview with connector position

Figure 5 on page 18 shows the scan head with the parts which are important for mounting. The scan head installation is described in chapter 4.4 on page 21.

Figure 6 depicts the scan head's mounting surface with its mounting bore holes and a bottom view of the scan head (beam exit side) which shows the displacement of the entry beam axis from the axis of an objective or from the beam exit axis (The deflecting mirrors are in their neutral positions).

Figure 6 on page 19 and figure 7 on page 20 show the dimensions necessary for mounting the scan head and adjusting the scan head with respect to the working area.

Figure 7 shows the following distances:

- the working distance A
- the distance B between the axis of the input beam and the lower edge of the housing
- the distance C between the axis of the input beam and the lowest edge of the objective or its enclosure.
- the diameter D which is the larger of the diameters of the objective and its enclosure.
- the distance E between the front edge of the beam entrance side and the axis of the beam exiting the scan head.

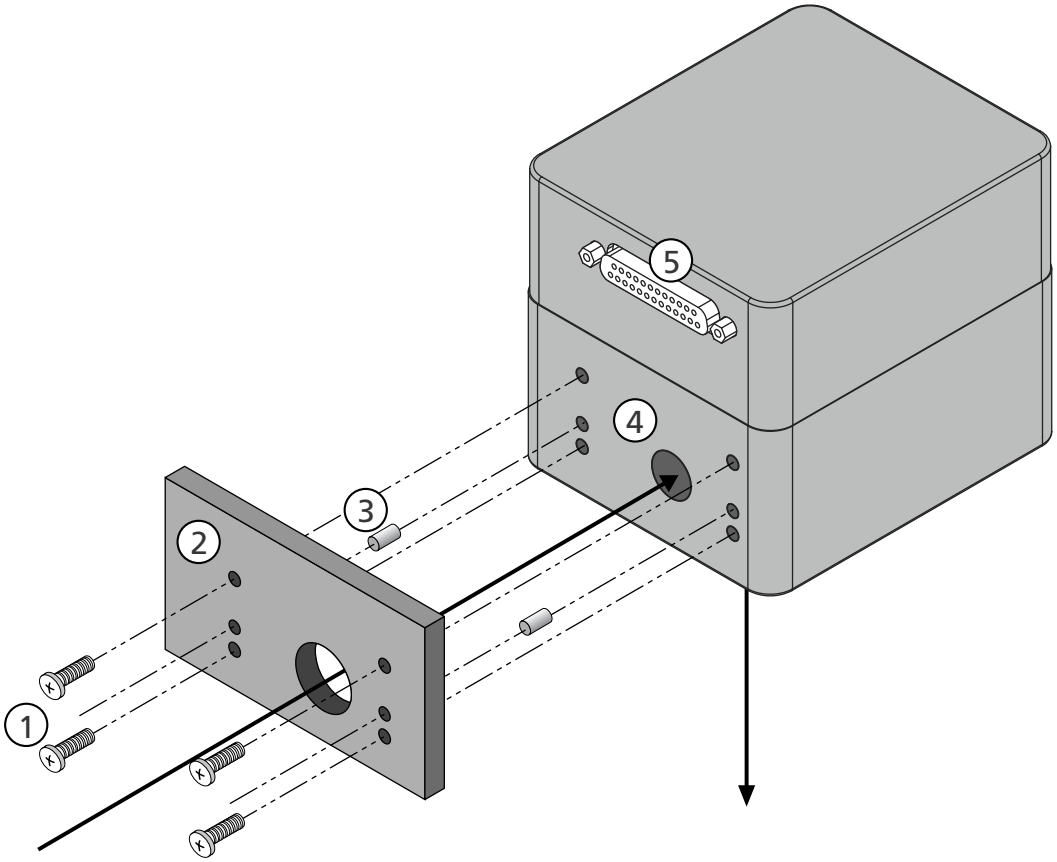

Legend

1 Mounting screws (4 x M5)*
2 Laser system flange*
3 Alignment pins (2 x 4_{h6})*
4 Beam entrance side with mounting bore holes
5 Electrical connection (D-Sub, 25-pin, female)

(* not included in the package)

5

Scan head with mounting assembly

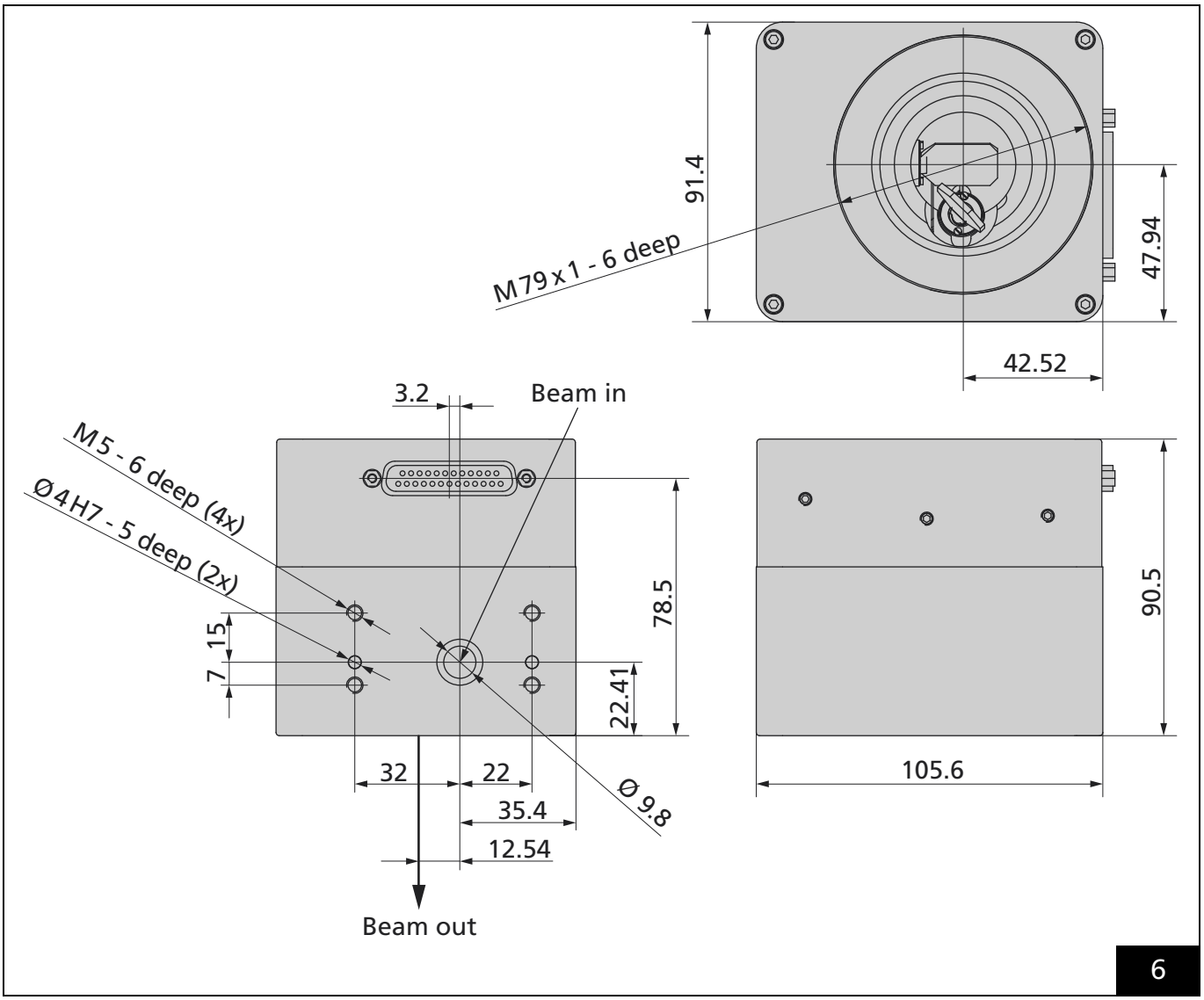

Front, side and bottom view (with beam displacement 12.54mm) of the scan head (all dimensions in mm)

Legend

1 Entering beam
2 Scan head
3 Objective (not shown true-to-scale)
4 Emerging beam
5 Image field

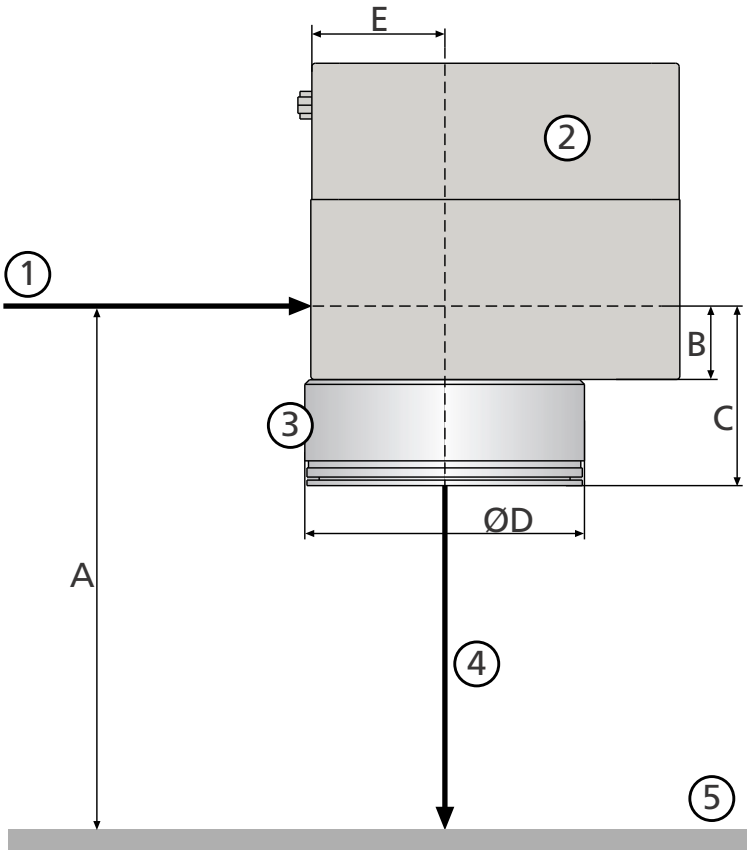

Dimensions [1)]

B = 22.41 mm

E = 42.52 mm

[1)] Not shown true-to-scale
The dimensions A, C and D depend on which objective the basiCube 10 is combined with. SCANLAB provides these dimensions in a separate data sheet.

7

Working Distance A, distances B-E (see chapter 4.4) and dimensions (basiCube 10 with standard objective)

4.4 Mounting the Scan Head

The illustrations for this section are found in the previous section, starting on page 17.

For mounting the scan head, the beam entrance side provides bore holes designed for attachment to a standardized flange on the laser system (see figure 5 on page 18). The laser system flange, alignment pins and mounting screws are not included in the package.

The dimensions of the beam entrance side and its bore holes are shown in figure 6 on page 19. The beam entry position is defined by two 4^{H7} alignment holes on the mounting bracket. The laser beam axis must be identical with the laser input axis of the scan head. To ensure this alignment, the laser system flange must have appropriate holes to accommodate two 4_{h6} alignment pins and four M5-threaded mounting screws.

When designing the attachment flange, also consider the position of the scan head's electrical connections (see figure 4 on page 17).

Mount the scan head in the following manner:

Caution!

- To align and fasten the scan head, only use the alignment and mounting holes depicted in figure 5 on page 18. Other holes cannot be used for aligning and fastening the scan head or for any other purposes.

- Carefully remove the protective covering of the laser input hole (e.g. with a small screwdriver).
- Place two 4_{h6} alignment pins in the corresponding 4^{H7} alignment holes on the flange or beam entrance side.
- Place the scan head on the flange so that the alignment pins line up with the alignment holes on the flange and the beam entrance side. This way the scan head is aligned with respect to the laser.
- Fasten the scan head to the flange by installing four mounting screws with M5 threads into the corresponding threaded mounting holes.

4.5 Electrical Connections

Figure 4 on page 17 shows the location of the electrical connector on the scan head.

The scan head provides a 25-pin female D-SUB connector for data transfer and power supply (SL2-100/POWER IN 15 V). Figure 8 shows the pin assignments of the connector.

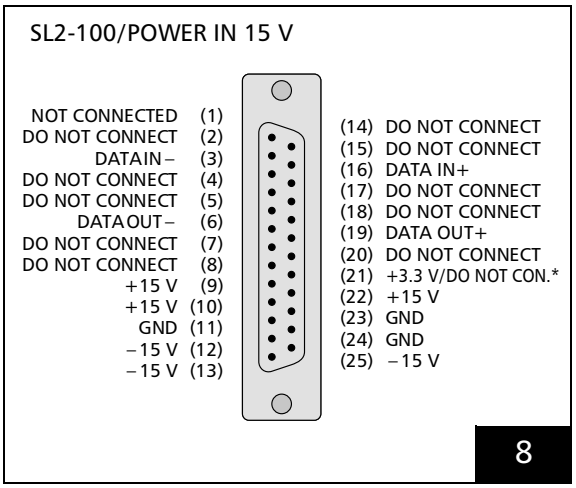

Pin out of electrical connector
(* see "Data Cable Guidelines", page 23)

Appropriate cabling must be implemented to connect both the power supply (see page 22) and the controller (see page 23) to one connector.
A suitable Y cable is optional available from SCANLAB (see figure 11 on page 24).

Power Supply

Requirements

For power, the scan head requires a balanced source of ±(15+1,5) V with a maximum current of 3 A per pole. The residual ripple of the power source should not exceed 10 mV_{pp} (power sources with larger residual ripple may be applicable – after reconsulting SCANLAB – for applications which only require reduced quality).

Only use a power supply with soft start.

The power supply and the SL2-100 data interface are galvanically isolated from each other.

The scan head is powered via two ±15 V power supplies (see figure 9 on page 22). In general, power supplies are not included in the package, but suitable power supplies are available from SCANLAB. SCANLAB recommends to connect the 0 V connection of the power supply's output side (or the scan head's GND connection) to the mains's grounding wire (PE).

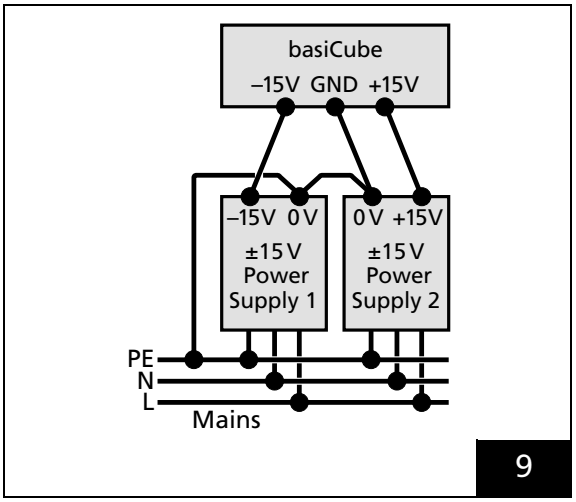

Connect the power supply's 0 V connection (or the scan head's GND connection) to the mains's grounding wire (PE).

Connections

The power signals should be assigned to the corresponding pins (+15 V / GND / –15 V, see figure 8 on page 21) of the scan head's female SL2-100/ POWER IN 15 V connector as follows:

Caution!

- Before proceeding with wiring the scan head, make sure none of the wires carry any voltages. The control electronics and the computer must be turned off.
- Turn off the power supply before disconnecting the power or the data cable.
- Follow all power supply electrical specifications exactly.

- Make sure each power connection has the correct polarity.
- Connect each pole of the power source via an appropriate cable to all pins of the scan head's connector. The cable connecting the power supply and the scan head must be shielded and should have a cross-sectional area of at least 1.5 mm^2 per pole and a length not exceeding 6 meters. RFI must be minimized by connecting the cable's shielding at one end (utilizing a large surface area) to the power supply's metal shielding and at the scanhead-end to the housing's D-SUB connector.
  - connect the power source GND to all three GND pins of the SL2-100/POWER IN 15 V connector
  - connect the –15 V power source to all three –15 V pins of the SL2-100/POWER IN 15 V connector
  - connect the +15 V power source to all three +15 V pins of the SL2-100/POWER IN 15 V connector

Data Cable Guidelines

Signal transfer between scan head and controller is realized via a data cable. A description of the transferred signals can be found in chapter 2.2 on page 8. The data cable is connected to the female SL2-100/ POWER IN 15 V connector.

The differential DATA IN input channel receives the the control values from the controller. The differential DATA OUT output channel returns the status signals to the controller. The 3.3 V voltage is supplied for SCANLAB's POF converter for optical data transmission (POF = Polymer Optical Fiber) – also see below. This voltage should not be used for other purposes.

Appropriate data cables, for either electrical transmission or optical fiber transmission, are obtainable from SCANLAB. The optical fiber, too, is attached via a 9-pin D-SUB connector. Optical conversion (POF conversion) for optical data transmission takes place in the D-SUB connector. The operating voltage for POF conversion is supplied at the SL2-100/POWER IN connector and the RTC5 board's scan head connectors.

Scan heads from SCANLAB are generally delivered without a data cable. If the data cable is not included in your package, SCANLAB recommends the following cable configuration:

- The cable should be fitted with 9-pin male D-SUB connectors at both ends. The two channels DATA IN± and DATA OUT± (4 wires) must consist of twisted cable pairs and be *cross-connected* at both D-SUB connectors (e.g. so that the RTC5 board's DATA OUT signal flows to the scan system's DATA IN input). The cable length should not exceed 25 m. SCANLAB recommends a cable impedance of 110 Ω, independent from the cable length.
- The data cable must have coaxial copper braided shielding.
- The D-SUB connectors must have fully shielded metal housings.
- The electrical connection of the cable's braided shielding to the D-SUB housing should *not* be implemented as a wire. Instead, the cable's braided shielding should be *coaxially* connected to the D-SUB housing via shielded clamps.

Figure 10 shows the data cable layout and pin assignments.

- Connect the scan head via the data cable to the customer-specific controller.
- If an RTC board is used as the controller, then follow the installation instructions in the RTC manual.

The scan head uses a single connector to provide both the power supply voltages and the data signals. Therefore, SCANLAB recommends implementing a cabling solution that allows the use of separate cables for data and power. The data section of such a cabling solution should be designed as described above.

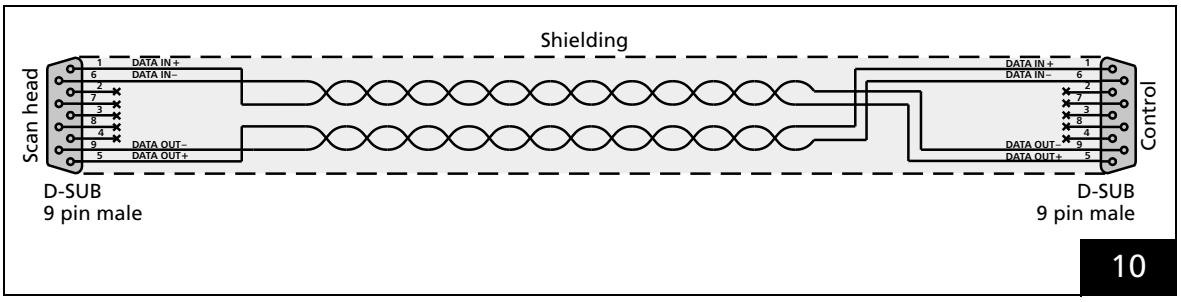

Data cable layout and pin assignments

Y Cable (optional)

The optional Y-cable is used to connect the scan head's SUB-D connector (SL2-100/ POWER IN 15 V) to both the controller and the power supply.

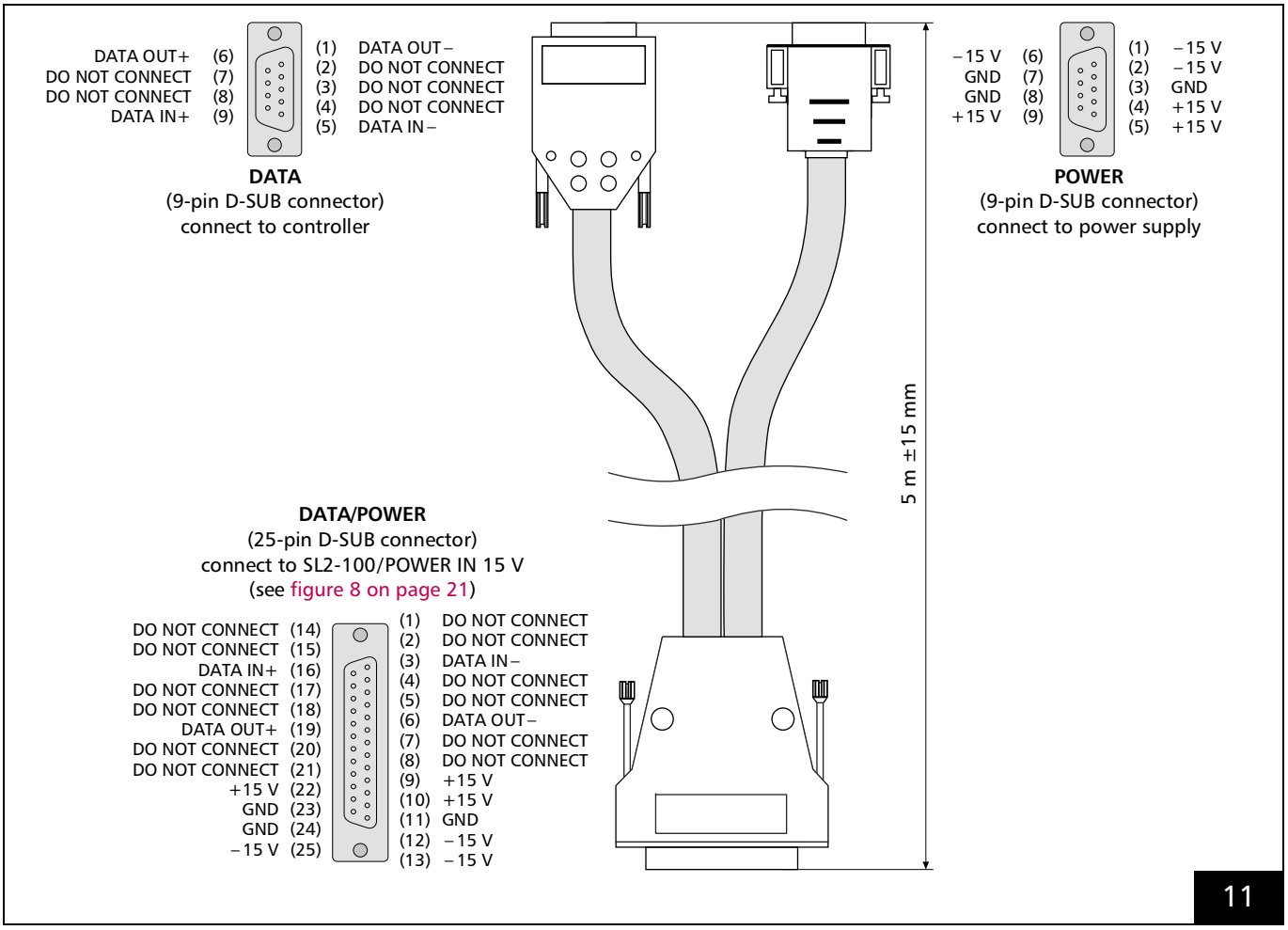

Pin out of the optional Y cable (SCANLAB #118340)

4.6 Operating and Storage Conditions

For storage, operation and servicing, make sure the following environmental conditions are met:

- The storage temperature for the scan head should be between −35 °C and +60 °C.
- The operating temperature is 25 °C ± 10 °C.
- Protect the scan head from humidity, dust and corrosive vapors to avoid damage to the mirrors, optics and electronics.
- Avoid strong electromagnetic fields and static electricity. These can damage the electronics of the interface and amplifier boards.

5 Start-up and Operation

5.1 Checking the Installation

Before operating the scan head, carefully check the following:

- Were the mechanical installation and electrical wiring fully and correctly carried out as described in "Installation" on page 15?
- Is the scan head equipped with the correct objective and appropriate mirrors? Compare the technical specifications (see page 35) to your applications' requirements.
- Are all optical components clean and free of dust? If necessary, clean the optical components as described in "Routine Maintenance of the Optical Surfaces" on page 31.

5.2 Checking the Laser Parameters

The scan head's deflection mirrors and the objective are designed for a laser beam with defined parameters.

- Compare the technical specifications (see page 35) with the requirements of your application. For information on tolerances and deviations, please contact SCANLAB.
- Verify that the input beam wavelength, the input beam diameter and the maximum laser power are compatible with the specifications of the scan head.

Caution!

- The beam diameter at the entrance of the scan head must not exceed 10 mm.
- The mirror coatings are designed for the laser wavelength indicated in the "Technical Specifications" on page 35.

Caution!

- The maximum allowed average laser power and the laser power density applied to the mirrors must not exceed the values indicated in the "Technical Specifications" on page 35. The damage threshold value for ed operation[(1)] is also listed there.
- The objective's AR coating is compatible with the working wavelength or wavelength range listed in the technical specifications (see page 36).

(1) For mirrors with High Power CO2 coatings (wavelength 10600 nm) no destruction threshold is listed, because the corresponding laser isn't operated in pulse mode.

The values specified for the maximum laser power rating and the laser damage threshold only apply to the scan mirrors. They do not apply to the scan objective or other components. Typically, however, the damage thresholds of scan objectives are similar to that of scan mirrors.

Also be aware that additional optical components in the optical beam path can focus a part of the laser beam onto the mirror and thereby dramatically lower the effective damage threshold. For instance, the lenses or protective window of a scan objective – though coated with an antireflex coating – always reflect a certain fraction of the laser light. If the lenses are shaped such that the reflected laser light is focused onto the scan mirrors, the power density within this focus may be more than 1000 times larger than in the original beam and the effective damage threshold will be correspondingly reduced. In particular, the mirrors can be damaged by lasers with high pulse energies, short pulse lengths and good beam quality. Contamination on or damage to the optical surfaces of the objective or protective window can further increase residual reflectivity, which further increases the danger of mirror damage from back reflections.

Furthermore, the specified values only apply to clean and new mirrors. Mirror contamination (dust, fingerprints, cleaning residue, deposits from laser processing etc.) as well as mechanical damage (scratches, fractures, burn-in, damage by an improper cleaning procedure) can considerably reduce the damage threshold.

The specified damage threshold for pulsed operation is the maximum energy density for which no mirror-surface damage is expected for the specified wavelength and for two hundred 10 ns pulses onto the same mirror spot (see note below).
In general, the damage threshold considerably decreases with an increasing number of laser pulses. In continuous operation, SCANLAB therefore recommends only applying suitably reduced energy densities (depending on the repetition rate and the laser parameters, typically five times smaller than the specified pulse damage threshold, if necessary even smaller).

The damage threshold for pulsed operation also decreases with decreasing pulse length. In particular, this effect must be considered for pico- or femtosecond lasers.

Note:

- The specified damage threshold energy density corresponds to 0% damage probability (see ISO 11254). Here, damage means a permanent, laser induced surface modification. Test parameters: angle of incidence: 45°; pulse length (FWHM): 10 ns; beam profile: TEM00; 200 pulses per test site; inspection method: Nomarski dark field microscope (150x).

5.3 Adjustment and Alignment

To ensure optimum performance of the scanning system, it is crucial that the laser beam and the scan head are precisely aligned with respect to each other. Incorrect alignment might lead to the following effects:

- vignetting of the laser beam
- a large, irregular spot
- arbitrary translation of the image field

In most cases, vignetting will be the predominant effect. Vignetting occurs if the laser beam is not able to fully pass through or be reflected by the optical components. Part of the beam's diameter will be cut off, resulting in power loss and possible system damage due to excessive absorption of laser power.

To avoid significant vignetting, the system must be aligned as precisely as possible, particularly in terms of the beam position relative to the scan head's optical axis. If the laser beam profile is Gaussian, the maximum tolerances appropriate for most applications are:

- tilt of the laser beam: < 5 mrad
- displacement: < 0.3 mm

If you use a laser with "flat top" beam profile, it can be necessary to align the system with even higher precision. Avoid vignetting especially for a high power laser. Align carefully and – if necessary – reduce the beam diameter to an appropriate value.

Danger!

- Do not stare directly into the laser beam or at any of its deflected radiation. Keep all parts of the body away from direct contact with the laser beam or any of its deflected radiation.
- Adjust the output beam path of the scan head by means of a laser with a laser class not higher than 2. If this is not possible, the laser should be operated at the lowest power. Avoid dangerous deflected radiation!

Caution!

- Remove the protective covers from the scan head's beam entrance and beam exit or objective prior to first-time operation.

In order to achieve optimal processing quality, it may be necessary to fine-tune the working distance A. The working distance A is defined as the distance between the axis of the laser beam entering the scan head and the nominal working plane (see figure 7). Adjust the working distance A to the value provided in the technical specifications (see page 35).

The working distance A can be directly adjusted in small steps. Alternatively, the working distance A can also be adjusted indirectly via the beam divergence – this can be achieved with the help of a beam expander or a variable focusing system (for example, SCANLAB's vario*SCAN* 20) placed in front of the scan head's entrance aperture.

5.4 Checking the Parameters of Application Software

Before you start a laser application, you must carefully check your application software with regard to the maximum allowed scan angle and working area.

If scan angles larger than the *maximum allowed scan angle* indicated on page 35 are used, some vignetting inside the scan head can occur and damage to the interior of the scan head and the objective might result.

If your application requires larger scan angles and a larger image field, then contact SCANLAB for guidance.

5.5 Safe Start-up and Shutdown Sequences

To assure safety during start-up, proceed exactly as follows:

(1) Turn on the controller containing the RTC control board and start up the control software.

(2) Turn on the power supply for the scan head.

(3) Turn on the laser.

When shutting down the system, turn off the components exactly in reverse order.

Caution!

- Before first-time operation, check the polarities of the power supply connections for the scan head.

Danger!

- Always turn on the scan head control (controller with RTC control board and control software) and the power supply for the scan head prior to turning on the laser. Otherwise there is the risk that the laser beam might be deflected in an arbitrary direction.
- Power for the scan head must be applied only when scan head control is active.

Note:

- If the basiCube 10 is switched on before the controller (with RTC control board) is started, then the scan mirrors deflect the laser beam to the center of the image field. In contrast, if the basiCube 10 is switched on with the controller already started but with the application software still not started, the scan mirrors deflect the laser beam to the border of the image field (X and Y bit value 0).

6 Optimizing the Application

6.1 Dynamic Positioning with Galvanometer Scanners

SCANLAB's galvanometer scanners and amplifier boards allow precise dynamic control of the two deflection mirrors. This enables exact positioning of the laser beam with high speed.

Most laser applications require the laser focus to trace contours within the working plane at a constant processing speed. To achieve this, the control subdivides the contours into microsteps. Microstep length is determined by the output period and desired speed. Galvo dynamics are usually optimized for such microvector control. For ensuring optimum operation, the following properties of galvanometer scanners must be considered:

Positioning Speed

As galvo dynamics are usually optimized for microvector control, it is advisable to also use vectors when positioning with the laser switched off. Compared to hard jumps, a defined positioning speed will prevent excessive oscillation and usually produce shorter positioning times. Positioning speeds can generally be significantly higher than processing speeds.

Both typical and maximum positioning speeds (in [rad/s]) are listed in "Technical Specifications" on page 35. There, the typical positioning speed within the image field (in [m/s]) is also specified (for a selected F-Theta objective).

With the SCANLAB RTC control board, the positioning speed (jump speed) can be set via the **set_jump_speed** software command. The RTC jump speed (in [bit/s]) is derived by multiplying the positioning speed (in [mm/s]) by the correction file's calibration factor (in [bit/mm]). With vector tuning, the jumps themselves should be executed via the commands **jump_abs** or **jump_rel**.

Processing Speed

The processing speed must be adjusted according to the particular application. As an example, a typical marking speed for marking small characters (marking speed in the image field in [m/s] for a selected F-Theta objective) is specified in Technical Specifications. For other applications or optical configurations, the appropriate processing speed can differ considerably from the specified value.

An appropriate initial value for optimizing the positioning speed is the marking speed listed in Technical Specifications. The process speed (RTC mark speed) that can be set via an RTC board is specified by multiplying by the correction file's calibration factor (in [bit/mm]).

Tracking Error (Time Lag)

Galvanometer scanner movements do not occur instantaneously with respect to vector control, but rather after a certain time lag, the tracking error. The tracking error characterizes the reaction properties of the galvanometer scanners and is specified as another key dynamic parameter (see Technical Specifications). The vector control output period must be significantly shorter than the tracking error. Otherwise, instead of moving the galvos with constant speed, the servos would attempt to follow the individual microsteps. This, in turn, would increase power consumption and thermally stress the galvos. SCANLAB therefore recommends as short an output period as possible, no more than 20% of the tracking error. SCANLAB's RTC boards consistently achieve very good results with an output period of 10 µs.

Oscillation behavior and tracking error must be taken into account by the application software, which synchronizes the scan head and the laser control. If the scan head is controlled via a SCANLAB RTC control board, then synchronization is easily realized by appropriately setting the scanner and laser delay parameters. SCANLAB recommends the following as initial values for delays:

- Laser-On Delay: 60% of the tracking error
- Laser-Off Delay: 120% of the tracking error
- Jump Delay: 200% of the tracking error
- Mark Delay: 100% of the tracking error
- Polygon Delay: 50% of the tracking error

The RTC user manual describes how delays can be optimized for an application's quality requirements.

6.2 Optimum Environmental Conditions

Long-term repeatability is very important in many scan head applications, e.g. for rapid prototyping in which the processing operation can span several hours. For such laser applications, the long-term drift and temperature drift of the scan head's galvanometer scanners, which manifest as a shift (offset drift) and increase or decrease in the size (gain drift) of the working image field, can exceed the allowable tolerances.

In such applications, it's helpful to start up the application only after the scanners have reached their operating temperature. In addition, the magnitudes of environmental fluctuations (e.g. operating temperature changes to which the scan head is exposed) should be kept as small as possible and the scan head preferably operated with a constant load.

6.3 Process Monitoring

The user has various possibilities for monitoring the scan process as described in the following.

Software Monitoring

For monitoring via software, the scan head provides a status signal that supplies informations about the current scan head operational state.

Optical Process Monitoring

For camera-based observation of the scan head's working field, SCANLAB offers a camera adapter. The camera adapter can be mounted between the scan head's beam entrance and the laser flange. The camera adapter's dichroitic beam splitter decouples light reflected from the illuminated workpiece and arriving at the scan head's beam entrance via the scan objective and the scan mirrors. The light decoupled from the beam path is then directed to the camera. Please contact SCANLAB for further information (see "Contacting SCANLAB" on page 33).

7 Routine Maintenance and Customer Service

7.1 Routine Maintenance of the Optical Surfaces

Dirty objectives and mirrors increase the absorption of laser power by their respective optical surfaces. Dirt, dust and other contaminants can distort the laser beam, burn into the surface and damage the optical elements. The warranty does not cover any damage due to improper use, cleaning or handling.

Danger!

- Never stare at the laser beam or its deflected radiation when performing routine maintenance of the scan head. Keep all parts of the body away from direct laser beams or deflected radiation. When the laser beam is not required, turn it off or reliably block it via a shutter to prevent its entry into the scan head.

Routine Maintenance of the Mirrors

The deflection mirrors are especially sensitive components and should not be touched or removed from the scan head. Nevertheless, you must regularly inspect the mirrors for dirt, dust and other contaminants. The mirrors must also be inspected after a long storage time.

If inspection reveals dust particles, then remove them by blowing air on the mirror's surface with the help of a rubber squeeze bulb or a source of compressed clean air.

If the dust cannot be removed in this manner, or if inspection reveals more serious contamination, then contact SCANLAB for guidance. In extreme cases, the complete scan head must be returned to SCANLAB for inspection and cleaning of the mirrors. However, in some situations SCANLAB might be able to recommend a user-performed special cleaning procedure.

Caution!

- Improper cleaning procedures – for instance cleaning metal-coated mirrors with acetone – can cause irreparable damages to the mirror coatings. Therefore, if the previously-mentioned cleaning procedure (with air) is insufficient, always contact SCANLAB for guidance before you start to perform any further cleaning procedures.

Routine Maintenance of the Objective's Optical Surface

The outermost optical surface of the scan head's objective is cleanable by the user. Regularly check the scan head's objective.

Danger!

- Also observe safety instructions in the separate objective data sheet.

If dirt, dust or other contaminants are found, clean the objective's optical surface as follows: Using a rubber squeeze bulb or compressed clean air, blow air on the objective's surface to remove dust and dirt particles. If the objective is still not clean, then use solvent and lens cleaning tissues as described below:

(1) Create a lens-tissue brush by folding a clean lens tissue so that the fold is about half as wide as the objective's lens surface.

(2) Dampen the lens-tissue brush with solvent. Don't use too much solvent, because otherwise drying marks might appear.

(3) Carefully grip one end of the dampened lens-tissue brush without touching any part of the tissue that will touch the lens surface.

(4) Place the dampened lens-tissue brush in the center of the objective's lens surface. Then use a *circular* motion to wipe slowly but steadily from the center of the optic around to the outer edges.

Repeat the above procedure until the objective's optical surface is completely clean. For each cleaning swipe, create a new lens-tissue brush.

Cleaning Notes

- Avoid skin contact with the optic.
- Use only clean lint-free tissues specially manufactured for cleaning optics (e.g. "lens cleaning paper"). Always use lens tissues with a solvent, because dry tissue can scratch optical surfaces.
- Use a solvent such as acetone or isopropanol of high purity (evaporation residue < 0.001%). Read and follow the safety advice and warnings for the solvents you will be using.
- Use clean gloves or finger cots that are impermeable to the organic cleaning solvents you will be using.
- Always wipe slowly but steadily, using a circular motion from the center of the optic around to the outer edges. Do not rub back and forth!
- Only wipe with slight pressure!

7.2 Customer Service

Servicing and Repairs

Except for routine maintenance of the optical surfaces, the scan head does not contain user-serviceable internal parts. All servicing and repairs should be performed only at SCANLAB. Only SCANLAB has the proper test facilities and procedures to service, repair and calibrate the system optimally.

Product Warranty

SCANLAB guarantees this product to be free of defects in manufacturing and material. The warranty is valid for 12 months after delivery. Repairs covered under the warranty will be performed at SCANLAB.

The scope of the warranty is limited to repair or replacement of the SCANLAB product.

SCANLAB is responsible for the return delivery of products repaired under warranty; the customer is responsible for delivery to SCANLAB.

SCANLAB will not be held responsible:

- when the product has been damaged through misuse or improper operation
- for damage due to improper laser power (e.g. focused beam on optical surfaces) or improper adjustment
- for damage to optical components (mirrors, objective, etc.) caused by improper handling or cleaning
- for consequential damages
- if the scan head has been altered
- if the warranty seal on the scan head's housing has been broken

If a returned scan head must first be brought into a serviceable state by SCANLAB (e.g. by removing alignment pins and other customer-added parts or cleaning the scan head) before servicing can begin, then the customer must bear the additional cost.

Contacting SCANLAB

For service, repairs, advice or information, simply contact SCANLAB using one of the contact possibilities listed below:

SCANLAB GmbH
Siemensstr. 2a
82178 Puchheim
Germany

Tel. +49 (89) 800 746-0
Fax: +49 (89) 800 746-199

info@scanlab.de
www.scanlab.de

Product Disposal

The basiCube 10 can be returned to SCANLAB for a fee to be properly disposed of in compliance with environmental regulations.

8 Troubleshooting

If problems occur while operating this device, verify that all operating instructions have been adhered to and then carry out the following troubleshooting procedures:

Problem	Possible Cause	Remedy
Low laser power	Dirty objective	Clean as described in the section "Routine Maintenance of the Optical Surfaces" on page 31
	Altered controller software parameters	Check input parameters
	Dirty or damaged mirror	Check mirrors. If they are contaminated, call SCANLAB for guidance. Return damaged scan head mirrors for repair.
Changed laser spot	Dirty or damaged objective	Clean as described in the section "Routine Maintenance of the Optical Surfaces" on page 31
	Dirty or damaged mirror	Check mirrors. If they are contaminated, call SCANLAB for guidance. Return damaged scan head mirrors for repair.
	Laser out of adjustment	Adjust laser
No laser beam	Problem with the laser	Check laser and electrical connections
	Problem with the laser controller	If the RTC board is used, check all electrical connections and the power supply
	Laser beam path blocked or shutter closed	Check laser beam path
Scan head does not steer laser beam in one or both directions	Problem with the scan head controller	Check power and data cables. Check software commands.

If the problems persist, please send the scan head to customer service (see page 33).

9 Technical Specifications

(all angle specifications optical)

SCANLAB Article numbers

Scan head with nominal wave length	
– 355 nm	#135988
– 450 nm - 2500 nm	#140520
– 532 nm	#135989
– 1030+515+343 nm	143923
– 1064 nm	135777
– HP 10600 nm	135990

Aperture

maximum diameter of laser beam inside the scan head	10 mm

Control

Input and Output Signals	SL2-100
Maximum range for control values (1)	–524288 to +524287
Calibration	±0.408 rad with ±503316 bit
Maximum allowed scan angle (vignetting insignificant) (2)	
– without objective	±0.37 rad
(with objective: see separate data sheet)	

Power supply

Requirements	±(15+1.5) V DC, max. 3 A each pole

(1) This maximum range for input values should be regarded as a theoretical range. Due to the danger of vignetting by the mirrors or by an objective (also see page 7), the specified maximum scan angle must never be exceeded.
(2) Theoretical value (see page 7 and page 9)

Optical Performance

Gain error	< 5 mrad
Zero offset	< 5 mrad
Nonlinearity	< 3.5 mrad/44°
Repeatability (RMS)	< 2 µrad
Long-term drift over 8 hours	
(at constant environmental conditions after warm-up)	
– Offset	< 100 µrad
– Gain	< 250 ppm
Temperature drift	
– Offset	< 30 µrad/K
– Gain	< 160 ppm/K

Tuning Specifications (Dynamic Performance) (1)

Tracking error	< 0.14 ms
Dither (RMS)	< 8 µrad
Typical positioning speed (* with 160 mm objective)	80 rad/s (*12.8 m/s)
Maximum positioning speed	130 rad/s
Typical marking speed (for marking small characters, with 160 mm objective)	2.5 m/s
Step response (settling to 1/1000 full scale)	
• 1% of full scale	< 0.35 ms
• 10% of full scale	< 1.0 ms

Weight

without objective	1.5 kg

Operating and Storage Conditions

Operating temperature	25 °C ± 10 °C
Storage temperature	−35 °C to +60 °C
Environmental conditions	non-condensing, non-corrosive

(1) See page 29.

Objective and Image Field

See separate data sheet.

Mirrors

...with coating 355 nm

Coating	dielectric high performance coating
Working wavelength	355 nm
Reflectivity	
– at 355 nm	more than 99.5% per mirror over the full range of angles
– at 633 nm	more than 65% per mirror
Maximum allowed average laser power	50 W
Maximum allowed laser power density continuous wave	150 W/cm²
Damage threshold for pulsed operation (with specified working wave-length, pulse length 10 ns, 200 on 1, also see page 27)	0.5 J/cm²

... with coating 450 nm - 2500 nm

Coating	dielectrically enhanced silver coating
Working wavelength	450 nm - 2500 nm
Reflectivity	
– at 450 nm - 2500 nm	more than 96% per mirror, over the full range of angles
Maximum allowed average laser power	12 W
Maximum allowed laser power density continuous wave	30 W/cm²
Damage threshold for pulsed operation (with working wavelength 1064 nm, pulse length 10 ns, 200 on 1, also see page 27)	0.25 J/cm²

... with coating 532 nm

Coating	dielectric high performance coating
Working wavelength	532 nm
Reflectivity	
– at 532 nm	more than 99.5% per mirror over the full range of angles
– at 630 nm - 670 nm	more than 50% per mirror
Maximum allowed average laser power	150 W
Maximum allowed laser power density continuous wave	500 W/cm²
Damage threshold for pulsed operation (with specified working wave-length, pulse length 10 ns, 200 on 1, also see page 27)	2.5 J/cm²

... with Coating 1030+515+343 nm

Coating	metal-based, dielectrically enhanced high performance coating
Working wavelength	1030+515+343 nm
Reflektivität	
– at 1030 nm	more than 98% per mirror over the full range of angles
– at 515 nm	more than 96% per mirror over the full range of angles
– at 343 nm	more than 90% per mirror over the full range of angles
– at 630 nm - 670 nm	more than 50% per mirror
Maximum allowed average laser power	
– at 1030 nm	12 W
– at 515 nm	6 W
– at 343 nm	2.4W
Maximum allowed laser power density continuous wave	
– at 1030 nm	60 W/cm²
– at 515 nm	30 W/cm²
– at 343 nm	12 W/cm²
Damage threshold for pulsed operation	
– at 1030 nm	0.06 J/cm²
– at 515 nm	0.04 J/cm²
(with specified working wave-length, pulse length 300 fs, 200 on 1, also see page 27)	

... with coating 1064 nm

Coating	dielectric high performance coating
Working wavelength	1064 nm
Reflectivity	
– at 1064 nm	more than 99.5% per mirror over the full range of angles
– at 630 nm to 670 nm	more than 70% per mirror
Maximum allowed average laser power	150 W
Maximum allowed laser power density continuous wave	500 W/cm²
Damage threshold for pulsed operation	5 J/cm²
(with specified working wave-length, pulse length 10 ns, 200 on 1, also see page 27)	

... with coating HP 10600 nm

Coating	dielectric enhanced metal coating
Working wavelength	9.3 µm - 10.6 µm
Reflectivity	
– at 10.6 µm	more than 99.5% per mirror over the full range of angles
– at 633 nm	more than 70% per mirror
Maximum allowed average laser power	100 W
Maximum allowed laser power density continuous wave	300 W/cm²

9.1 EU Declaration of Conformity

Manufacturer:

SCANLAB GmbH
Siemensstr. 2a
82178 Puchheim
Germany
www.scanlab.de

Object of this declaration (hereafter referred to as "products"):

#135988 - basiCube 10; 355 nm; digital SL2-100
#140520 - basiCube 10; 450–2500 nm; digital SL2-100
#135989 - basiCube 10; 532 nm; digital SL2-100
#143923 - basiCube 10; 1030+515+343 nm; digital SL2-100
#135777 - basiCube 10; 1064 nm; digital SL2-100
#135990 - basiCube 10; 10600 nm-HP; digital SL2-100

The manufacturer declares that the products listed above are in conformity with Directive 2011/65/EU of the European Parliament and of the Council of 8 June 2011 on the restriction of the use of certain hazardous substances in electrical and electronic equipment (RoHS).
RoHS compliance of the used components is based upon the specifications of the respective suppliers.

Furthermore, the manufacturer declares that the products listed above are solely intended for commercial use. They are intended to be incorporated into a machine (normally into a laser system) as "components" or "sub-assemblies" of the machine. Usually, they do not meet all the requirements for a ready-to-use machine or a consumer product. However, they are designed in such a way that the usual safety and health regulations can be adhered to when installing the products in a machine or when using the products for the construction of a machine.

Moreover, the manufacturer confirms that the above-mentioned products themselves or technically comparable products or the essential components contained therein have met the specifications of the following harmonized standards in a typical installation and application situation:

- EN 61000-6-2:2005
  Electromagnetic compatibility (EMC) - Generic standards - Immunity for industrial environments
- EN 55011:2009 + A1:2010 Group 1 Class A
  Industrial, scientific and medical equipment - Radio-frequency disturbance characteristics - Limits and methods of measurement

Do not put the products listed above into service until they are incorporated in a machine which itself complies with the regulations of all applicable standards and directives.

This declaration of conformity is issued under the sole responsibility of the manufacturer.

SCANLAB GmbH
Puchheim, Germany – September 14, 2021

This document was automatically generated and is valid without signature.