Installation and Operation

excelli*SCAN* 14 (ID# 143094)

digital SL2-100, 1064 nm-IP, with mirror air cooling and water cooling

Rev. 3.2

August 29, 2025

SCANLAB GmbH
Siemensstr. 2a
82178 Puchheim
Germany

Tel. +49 (89) 800 746-0
Fax: +49 (89) 800 746-199

info@scanlab.de
www.scanlab.de

© SCANLAB GmbH 2025

(Doc. Rev. 3.2 - August 22, 2025)

SCANLAB reserves the right to change the information in this document without notice.
No part of this manual may be processed, reproduced or distributed in any form (photocopy, print, microfilm or by any other means), electronic or mechanical, for any purpose without the written permission of SCANLAB GmbH.
excelli*SCAN* is a registered trademark of SCANLAB GmbH.
Other mentioned trademarks are hereby acknowledged as properties of their respective owners.

Table of Contents

1 Introduction 5
1.1 Product Overview 5
1.2 Unpacking Instructions and Typical Package Contents 5
1.3 I.D. Plate 5

2 The excelli*SCAN* 14 – Principle of Operation 6
2.1 Dynamic Positioning Laser Beams 6
2.1.1 Customized Optical Configuration 6
2.2 Scan Head Control 7
2.2.1 Data Transmission between the Controller and the Scan Head 7
2.2.2 Position Signals, Image Field and X-Y Reference System 7
2.2.3 Returned Signals 9
2.2.4 TrAck Signal (Trajectory Acknowledge) 12
2.2.5 Configuring the Servo and Start Behavior 13
2.3 Internal Protective Functions 14
2.3.1 Assuring Reliable Power Supply 14
2.3.2 Monitoring Scan Range and Proper Scan Operation 14
2.3.3 Assuring Safe Operating Temperatures 15

3 Safety During Installation and Operation 16
3.1 Working Safely with Laser Radiation 16
3.2 Save Handling of the Scan Head 17
3.3 Electrical Installation Safety 17
3.4 Coolant 17
3.5 Concept for Safe Operation 18

4 Installation 19
4.1 Checking the Specifications 19
4.2 Mounting the Objective 19
4.2.1 Objective Holder 19
4.2.2 Objective 20
4.3 Layout and Dimensions 21
4.4 Modification of the Connector Bracket 25
4.5 Mounting the Scan Head 26
4.6 Water Cooling 27
4.6.1 Selecting an Appropriate Cooling System 27
4.6.2 Coolants 28
4.6.3 Connecting the Cooling System 29
4.7 Mirror Air Cooling 29
4.8 Electrical Connections 30
4.8.1 Power Supply 30
4.8.2 Data Cable Guidelines 31
4.9 Operating and Storage Conditions 32

5 Start-up and Operation 33
5.1 Checking the Installation 33
5.2 Checking the Laser Parameters 33
5.3 Putting the cooling circuit into operation 34
5.4 Adjustment and Alignment 34
5.5 Checking the Parameters of Application Software 35
5.6 Safe Start-up and Shutdown Sequences 35
5.6.1 Start-up duration 35

5.6.2 Warm-up Time 36
5.6.3 Minimum power-off duration 36

6 Optimizing the Application 37

6.1 Process Optimization via Process Simulation 37
6.2 Process Monitoring 37
6.2.1 Software Monitoring 37
6.2.2 Optical Process Monitoring 37
6.3 Configuring the Start Behavior 38

7 Routine Maintenance and Customer Service 39

7.1 Routine Maintenance of the Optical Surfaces 39
7.1.1 Routine Maintenance of the Mirrors 39
7.1.2 Routine Maintenance of the Objective's Optical Surface 39
7.2 Routine Maintenance of the coolant 40
7.2.1 Checking the coolant 40
7.2.2 Analyzing the coolant 40
7.2.3 Replacing the coolant 40
7.3 Customer Service 41

8 Troubleshooting 42

8.1 Fault Diagnosis and Functional Test 43

9 excelli*SCAN* 14 Technical Specifications 44

1 Introduction

This operating manual describes the excelli*SCAN* 14 scan head with ID number 143094.

The manual is a part of the product. Please read these instructions carefully before you proceed with installing and operating the scan head. In particular observe all safety guidelines in this manual. If there are any questions regarding the contents of this manual, please contact SCANLAB (see page 41).

Keep the manual available for servicing, repairs and product disposal. This manual should accompany the product if ownership changes hands.

SCANLAB reserves the right to update this operating manual at any time and without notification.

1.1 Product Overview

The excelli*SCAN* scan head with ID number 143094 is designed for positioning laser beams with a wavelength of 1064 nm-IP and is equipped with a 14 mm aperture.

The scan head is designed for digital signal transfer via the integrated digital servo electronics with SL2-100 interface.

The scan head is equipped for cooling of the mirrors with compressed air. Appropriate connections for compressed air are provided on the housing.

To minimize the temperature influence on the static and dynamic performance, the scan head is equipped for water cooling of the electronics and the galvanometer scanners. Appropriate connections for water are provided on the housing.

The technical specifications of the product are summarized on page 44.

The excelli*SCAN*scan head uses *SCAN*ahead servo control. Therefore it exhibits a different dynamic behaviour than scan heads with conventional control. In particular, you'll need to consider timing differences when synchronously operating your scan head, laser and peripheral equipment. The RTC6 board's command set provides appropriate commands for controlling the excelli*SCAN*. For details see the separate document "excelli*SCAN* Scan Heads – Functional Principle of *SCAN*ahead Servo Control and Operation by RTC6 Boards".

1.2 Unpacking Instructions and Typical Package Contents

- Carefully remove the scan head from the package.
- Protect the scan head from dust and other contaminants.
- Keep the packaging, so that in case of repair the scan head can be properly repackaged and returned to SCANLAB.
- Also remove all other articles from the package. Check that all parts have been delivered. Please refer to the corresponding packaging list.
  A scan head package typically includes a product test protocol with test data. For mounting an objective an objective mounting set may be included in the package or already mounted to the scan head. For controlling the scan head, an RTC control board may be included in the package.

1.3 I.D. Plate

The scan head's I.D. plate (see figure 1) with the scan head's serial number is found on the housing.

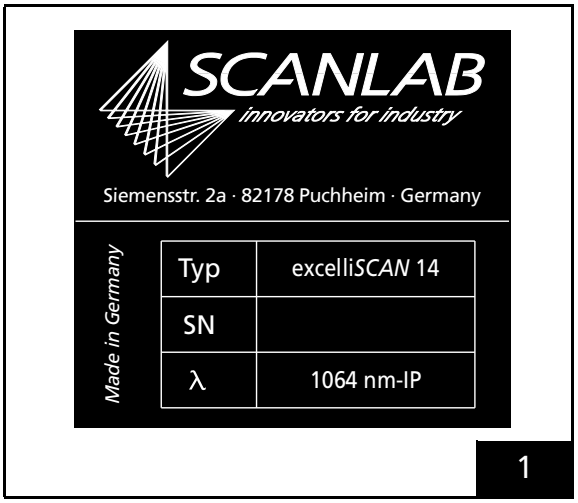

I.D. plate with serial number (SN)

2 The excelli*SCAN* 14 – Principle of Operation

2.1 Dynamic Positioning Laser Beams

The primary tasks of an X-Y scan head are to deflect a laser beam in the X-Y directions and to focus the beam onto the working plane.

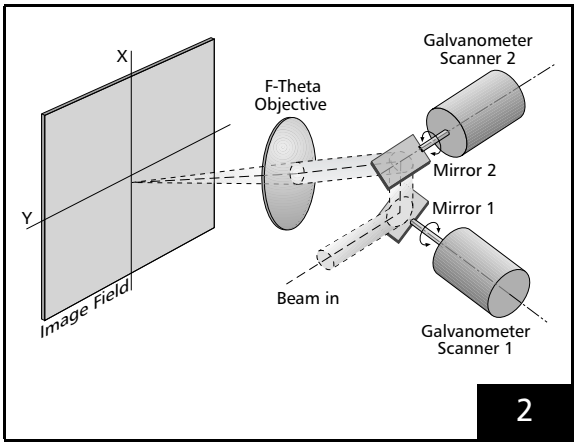

Basis of Operation: beam deflection via two galvanometer scanners

The beam deflection task is realized with the help of two tiltable deflection mirrors (see figure 2). The beam enters the scan head through the input aperture and is first deflected in the Y direction by mirror 1 attached to galvanometer scanner 1. The beam then goes on to be deflected in the X direction by mirror 2 attached to galvanometer scanner 2. The resulting deflection angles can be precisely and high-dynamically adjusted by controlling the positions of the galvanometer scanners.

Focusing the beam onto the working plane can be achieved with the help of a scan lens fitted to the scan head's beam exit hole. If an F-Theta objective is used, the position of the focal point on the image field will be directly proportional to the angle of incidence of the beam.

Alternatively, focusing of the beam can be realized with the help of a dynamic focusing system (for instance, SCANLAB's vario*SCAN* 20i) positioned in front of the scan head's entrance aperture.

2.1.1 Customized Optical Configuration

To obtain optimum optical performance for a particular laser application, the scan head's optical configuration must meet the requirements of the application and the used laser system. To achieve optimum reflectivity at the mirrors, SCANLAB therefore selects mirror coatings appropriate for the wavelength and power of the user's laser. The size of the mirrors or the scan head's aperture is selected in accordance with the desired spot size and scan speed.

The user, on the other hand, has to ensure that the parameters of the entering laser beam (wavelength, power density and diameter) match the specifications of the scan head.

First the coatings of the deflection mirrors are designed for a defined wavelength or wavelength range. If the wavelength of the employed laser deviates from the specified value, the mirrors will not work properly and can be destroyed.

Second for the mirror coatings also the allowed laser rating is defined. If the specified values are exceeded, destruction of the coatings might result (also see section "Checking the Laser Parameters" on page 33).

In addition the deflection mirrors are intended for a specific beam diameter and a maximum allowed scan angle. If the beam diameter or the scan angle exceeds the specified maximum values, vignetting of the beam can occur. The beam is then no longer fully deflected by the mirrors. A portion of the beam is then absorbed by the scan head, resulting in a loss of power. Furthermore, the interior of the scan head might be damaged due to the absorption of laser radiation.

The amount of possible power loss depends, among other things, on the beam profile of the employed laser. For a Gaussian beam profile, beam vignetting is insignificant when the scan angle of each mirror does not exceed the *maximum allowed scan angle* defined on page 44 and when the diameter of the beam doesn't exceed the specified aperture.

Caution!

- Make sure the aperture and the coatings of the deflection mirrors meet the requirements of your application (see "Technical Specifications" on page 44). For information on tolerances and deviations, please contact SCANLAB.
- Check if the wavelength of the input beam and the maximum ratings for beam diameter and laser power match the specifications of the scan head (see page 44).
- When using scan angles larger than the *maximum allowed scan angle* indicated on page 44, some vignetting inside the scan head can occur and damage to the interior of the scan head might result. If your application requires larger scan angles, then please contact SCANLAB.
- The maximum allowed scan angle is derived from the geometric and optical data of the employed components (see the section "Customized Optical Configuration" on page 6). In some cases, particularly with sufficiently small calibration angles, the maximum allowed scan angle can be larger than the maximum adjustable angle. In such cases, the specified maximum allowed scan angle has no practical relevance.

2.2 Scan Head Control

2.2.1 Data Transmission between the Controller and the Scan Head

The controller and the scan head are interconnected via a serial interface for digital data transfer. Data transmission follows the SL2-100 protocol. In the process, essentially the following signals are transferred:

- The controller delivers position values, i.e. (20-bit) set values for the X and Y axes.
- The scan head generates data signals to be returned to the controller.

The scan head can be operated via a SCANLAB RTC6 control board (see compatibility note below) but not via an older RTC board as an RTC4 or RTC5. The SL2-100 protocol supports the full functionality of the excelli*SCAN*'s digital servo architecture. This allows, for instance, separate, simultaneous evaluation of the X and Y returned data signals.

For details about controlling the excelli*SCAN* via an RTC6 board see the separate document "excelli*SCAN* Scan Heads – Functional Principle of *SCAN*ahead Servo Control and Operation by RTC6 Boards".

The scan head is not compatible with:

- RTC6 PCI express boards, delivered before 2017-09-14
- RTC6 Ethernet boards, delivered before 2017-11-21
- the RTC6 software package V1.2 (pre-series)
- laserDESK $\leq$ 1.4.0.x

2.2.2 Position Signals, Image Field and X-Y Reference System

Position signals are digitally transferred from the controller to the scan head.

Figure 3 shows the definition of the X-Y reference system which is used for the position signals transmitted to the scan head. The orientation of the axes corresponds to the orientation used by the RTC boards from SCANLAB: The Y axis points in the opposite direction of the entry beam (and the Z axis in the opposite direction of the exit beam). Consequently: Scanner 1 deflects the beam in the Y direction, Scanner 2 in the X direction.

The scan head is calibrated in such a way that for a scan angle of 0.408 rad optically with excursion in the negative axis direction the bit-value "–503316" has to be transmitted, for the neutral position (null point) the bit-value "0, and for a scan angle of 0.408 rad optically with excursion in the positive axis direction the bit-value "+503316".

The maximum adjustable scan angle is (1 / 0.96) larger than the calibration angle. The input signal values for the maximum adjustable image field points (see figure 3) are listed in the following table.

Position	X Bit-Value	Y Bit-Value
0	0	0
1	524287	0
2	524287	524287
3	0	524287
4	–524288	524287
5	–524288	0
6	–524288	–524288
7	0	–524288
8	524287	–524288

Vignetting can occur at a particular scan angle dependent on the specific scan head and objective. The laser beam is then partially blocked within the scan head or objective, which results in transmission losses. The higher the power loss, the greater is the risk of damage to the scan system. In view of this, the technical specifications page 44 include not only the calibration angle, but also the maximum allowed scan angle. This is not the same as the maximum adjustable scan angle. To avoid scan system damage, make sure the maximum allowed scan angle is never exceeded.

The maximum allowed scan angle is derived from the geometric and optical data of the employed components (see the section "Customized Optical Configuration" on page 6). In some cases, particularly with sufficiently small calibration angles, the maximum allowed scan angle can be larger than the maximum adjustable angle. In such cases, the specified maximum allowed scan angle has no practical relevance.

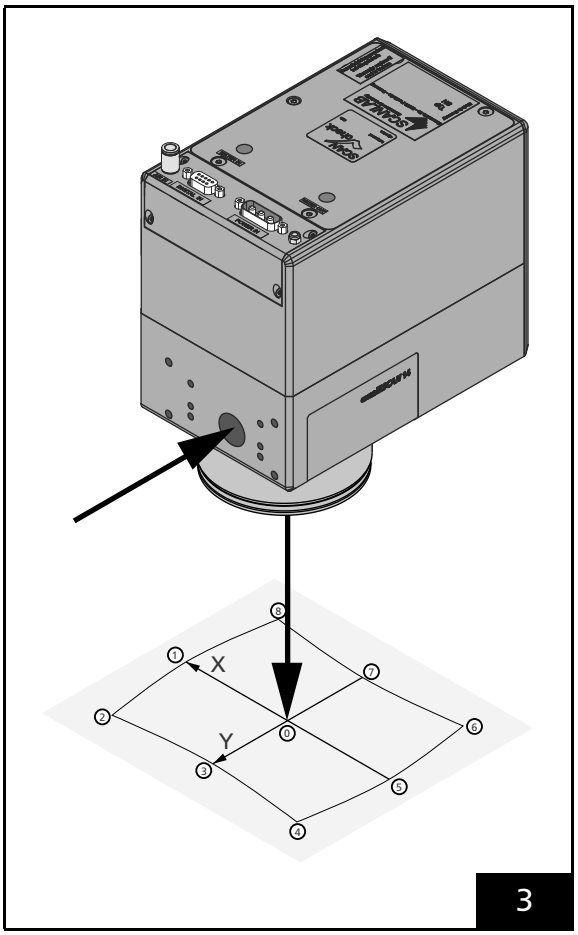

Positions in the image field

Figure 3 also depicts the pillow-barrel-shaped distortion of the square image field and shows the orientation of this distortion with reference to the axes. The field distortion is caused by the beam path within the scan head and by the characteristics of the objective. It must be compensated by the controller.

If you use a SCANLAB RTC control board for controlling the scan head, the field distortion is compensated automatically. Before data values are transferred to the scan head, the values are transformed by the RTC boards with the help of a correction table. A correction table specific for your system is included in the RTC software package or can be ordered from SCANLAB (also refer to the RTC manual). You can use positive and negative coordinate bit-values (–524288 to +524287) of an ideal image field, based on the reference system shown in figure 3, with the origin (zero point) in the center of the image field.

The RTC board calculates the corresponding input values and transfers them to the scan head.

The image field size, as well as the working distance A between the input laser beam and the nominal working plane, depend on various factors – among them the focal length of the objective and the aperture of the scan head. The divergence of the input beam also has an influence on the working distance A.

2.2.3 Returned Signals

The excelli*SCAN*'s digital servo architecture allows a wide variety of data signals to be returned to the control board. Via the return channel (DATA OUT±), data are transmitted to the controller board every 10 µs simultaneously for both axes (in compliance with the SL2-100 protocol). This opens up possibilities such as monitoring the galvanometer scanners' actual values during execution of an application or carrying out comprehensive troubleshooting in case of operational malfunction.

The scan head returns the following signals to the control board every 10 µs:

- a 20-bit status word:
  When the scan head is operated via an RTC6 control board, the command **control_command** can be used for selecting which data the scan head should return to the control board via the 20-bit status word. The selected data sources will be transmitted until another source is selected. By default, after every reboot or reset, the XY2-100 status word (see below) is returned via the 20-bit status word.
- 6 additional status bits:
  Via these status bits, the scan head returns to the control board (independently on the selection via **control_command**) the PWROK, TempOK and TrAck status informations of the XY2-100 status word (see below).

Data received by the RTC6 board can be synchronously or asynchronously read at any time via **get_head_status**, **get_value** or additional commands (see the RTC6 manual).

XY2-100 Status Word

By default, starting from five seconds after every reboot or reset, the XY2-100 status word is returned via the 20-bit status word. The status word contains three status values, which are also returned (continuously and independently on the selection via **control_command**) via the six additional status bits:

- PWROK (i.e. "Power OK")
  PWROK = 0 signifies a problem in the power supply. In normal operation, the PWROK signal is 1. If the output stages of the galvos switch off, the signal switches from 1 to 0 during operation. **The laser must be turned off immediately**. Under some circumstances the system could deflect the laser beam in an unintended direction, which may

cause health hazards and severe equipment damage. The system should be checked immediately to determine the cause (also see section "Power Supply" on page 30).

- TempOK (i.e. "Temperature OK")
  The TEMPOK signal always switches from 0 to 1 when the operating temperature has been reached (which might take a few minutes). If, during operation, the galvo temperature drops below its minimum operating temperature or exceeds a maximum allowable temperature, the TEMPOK signal will switch to 0. In this case, system operation does not need to be stopped immediately, but large drift or other side-effects may occur.

  If system operation is not stopped and the scanner temperatures then reach a still higher critical value, then the built-in temperature control mechanism will switch off the galvanometer scanner drive stages to avoid heat-induced damage to the scanners or the head (see page 15). If the scanner temperature drops again below the power-down threshold, the scanner drive stages are automatically restarted.

- TrAck ("TrajectoryAcknowledge")
  For a detailed description of the signal, see chapter 2.2.4 "TrAck Signal (Trajectory Acknowledge)" on page 12.

Notes

- The status word read back from the X and Y axis is identical, i.e. it is sufficient to read back the status word from the X axis only.
- The status word is returned by the firmware by default, i.e. sending control command 0x0500 is only needed, if a different signal has been selected before.

Additional Data Types

When the excelli*SCAN* is operated via an RTC6 board, the command *control_command* (see the RTC6 manual) can be used for selecting which data the scan head should return to the control board. Unless the configuration is changed after reset, the XY2-100 status word will be transferred (see the previous section). The selected data is transmitted at 10 µs intervals until a different data type is requested.

The following is a description of the data types that may be selected. The data can and must be separately evaluated for each axis.

XY2-100 Status word

See the previous section.

Actual Position

Actual angular position of the corresponding axis

Set Position

Set angular position of the corresponding axis

Position Error

Set angular position - Actual angular position (difference between the current actual angular position and the current set angular position of the corresponding axis)

Actual Current

Actual galvo output stage current of the corresponding axis

Relative Galvo Control

Galvo control voltage (in per mille of the maximum value)

Actual Velocity

Actual angular velocity of the corresponding axis

Temperature

The following temperatures can be returned to the control board:

- Temperature of galvo 1
- Temperature of galvo 2
- Temperature of the servo board
- Temperature of the extension board for evaluating the encoder signals (not used for temperature status)

Internal Voltages

For each axis, the following internal voltages can be returned to the control board:

- Supply voltage of the corresponding position detector
- DSP core supply voltage (1.8 V)
- DSP IO voltage (3.3 V)
- Analog section voltage (9 V)
- AD converter supply voltage (5 V)

Exact values for the internal voltages can vary for different scan head versions.

General Scan Head Information

Alternatively, the following data types may be selected at both axes:

- Serial number
- Article number
- Firmware version number
- Calibration
- Aperture
- Wavelength
- Running time

Note

- The scan head has no galvo heaters.

2.2.4 TrAck Signal (Trajectory Acknowledge)

The TrAck signal is used to monitor the control accuracy of the scanner motors during job execution. For a definition of the signal see figure 4.

As long as the deviation between the ideal position and the actual position (trajectory error[1]) doesn't exceed a certain threshold, TrAck is 1. If the trajectory error exceeds the threshold signal, TrAck is triggered (set to 0). Additionally, TrAck is not being reset back to 1 automatically if the trajectory error falls below the threshold again, see figure 4. This lets the user determine a threshold violation even if the error event is already over.

In addition to the violation of before mentioned threshold value, TrAck is also being triggered, when internal quantities of the control system, such as motor voltage or motor current, reach saturation.

Note that there is an individual TrAck signal for each axis. Also the threshold value can be configured for each axis individually. See section "Configuring the TrAck Threshold" on page 13 for modifying the threshold values.

Figure 4 shows the relationship between the specified target position (angular position), the current actual trajectory of the galvanometer scanner and the target trajectory. This clarifies the definition of the TrAck signals.

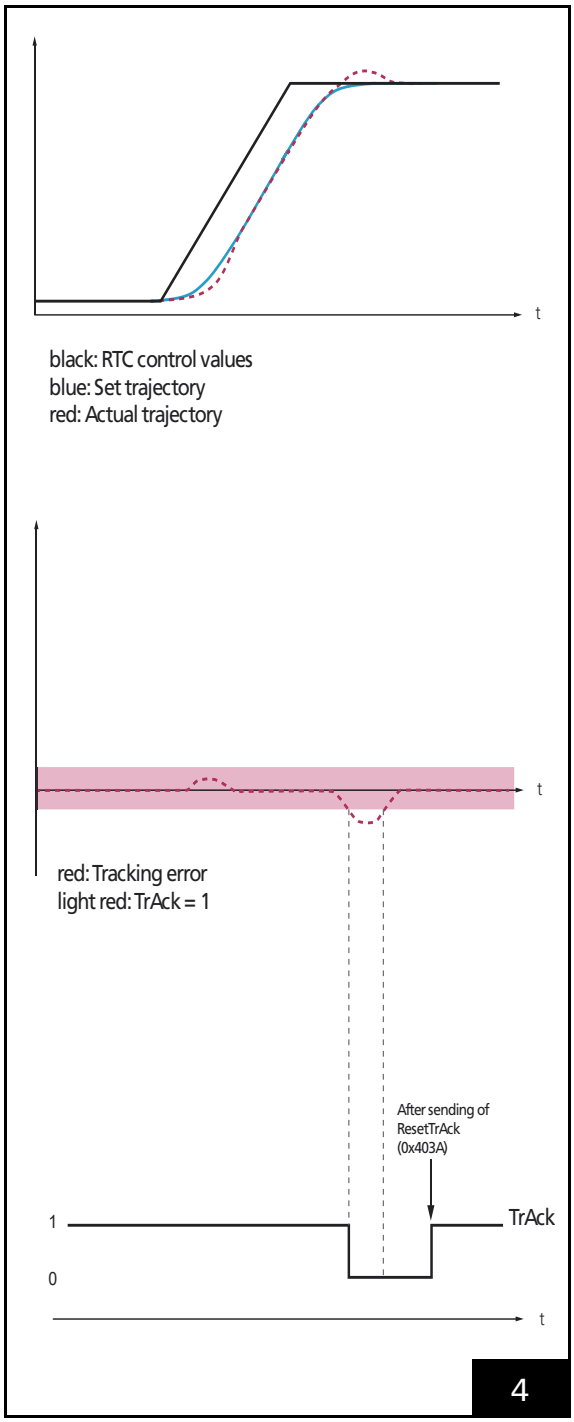

Definition of the TrAck signals

(1) Trajectory error is synonymous to position error, as used in manual "excelliSCAN Scan Heads – Functional Principle of SCANahead Servo Control and Operation by RTC6 Boards".

Accessing the TrAck Signal

To access the TrAck signals for both axes, the XY2-100 status word can be read back. This is done by sending control command 0x0500 to the X axis of the scan system and extracting following bits:

- Bit #3 = Bit #11: TrAck signal of X axis
- Bit #4 = Bit #12: TrAck signal of Y axis

Resetting the TrAck Signal

To reset the TrAck signals (set to 1), sent **ResetTrAck** to the respective axis of the system, see manual "excelliSCAN Scan Heads – Functional Principle of SCANahead Servo Control and Operation by RTC6 Boards".

Configuring the TrAck Threshold

The threshold value for the TrAck signal can be modified by the user by sending control command 0x15XX, where XX is the desired threshold value. The threshold can be set for each axis individually by sending the before mentioned control command to the respective axis, see **SetPosAcknowledgelevel,** see RTC6 manual.

The default start behavior is for the scan system to set the threshold value to 0.28% of the full position range (i.e. 0.28% of 2^{16} counts, equal to control command 0x15B7) after every power-up or reset. If other threshold values are desired, they must be separately set for each axis.

2.2.5 Configuring the Servo and Start Behavior

The excelli*SCAN* allows to configure a number of settings. If used together with an RTC6 board the configuration can be realized via the command **control_command** (see the RTC6 manual).

The user can

- select the data type to be transmitted from scan head to the controller (see section "Returned Signals" on page 9),
- set a desired TrAcknowledge threshold value (see chapter 6.2, "Process Monitoring", on page 37),
- configure the scan head's start behavior (see chapter 6.3, "Configuring the Start Behavior", on page 38) and
- perform a fault diagnosis or verify intact data transfer capability (see chapter 8.1, "Fault Diagnosis and Functional Test", on page 43).

2.3 Internal Protective Functions

2.3.1 Assuring Reliable Power Supply

For safe scan head operation, a reliable supply of power is absolutely essential. If the supply voltages deviate excessively from their specified values or if the mechanism for switching on power does not result in symmetrical turn-on of the supply voltages, then unintended scanner movements may occur. This in turn can damage the scanners and deflection mirrors and can lead, if the laser is on, to beam deflection in unintended directions.

The excelli*SCAN*'s supply voltages are monitored by the excelli*SCAN*'s digital servo electronics. If, during operation, the supply voltage falls below a minimum of approx. 27 V (e.g. due to excessively long or thin cables, a weak power supply or high loads), then the electronics disconnects the scan head from the power supply. In order to restart scan head operation, the supply voltage problem must then be resolved and the scan head switched off and then restarted. See "Power Supply" on page 30 for more information.

2.3.2 Monitoring Scan Range and Proper Scan Operation

The excelli*SCAN* has a built-in monitoring function to prevent damage to its galvanometer scanners or electronics when a problem occurs.

In the following cases, the output stage of the galvanometer scanner is switched off and the galvanometerscanner can no longer be controlled:

- The galvanometer scanner's scan angle exceeds the allowed range due to an operational disturbance.
- The galvanometer scanner is not moved to its set position within a certain time.
- The galvanometer scanner is deviating from its expected behaviour, due to a defect of the mirror or the bearing.

2.3.3 Assuring Safe Operating Temperatures

If the scanners are driven for long periods of time at high positioning speeds or if the application includes a high rate of vector changes, the correspondingly high current consumption of the galvanometer scanners can lead to excessive temperatures – especially in the case of insufficient cooling, for instance due to a weak thermal link to the machine.

To prevent damage to the scanners, the excelli*SCAN* provides a two-stage temperature control mechanism.

Caution!

- The user must ensure that the application program evaluates the temperature control signals correctly, as described below.

Stage 1: Temperature Status Warning

The temperature status signal TempOK indicates that the scanner is operating at a safe temperature level. During normal operation, the signal is 1.
If the scanner temperature rises above a certain value or drops below a minimum value, then the TempOK signal switches to 0. If the TEMPOK signal switches to 0 during operation, system operation should be stopped and the system should be checked to determine the cause. If system operation is not stopped, large drift or other side-effects may occur.

Stage 2: Critical Temperature Shutdown

In addition to the temperature status warning, the following scanner protective function is implemented:

If a scanner's temperature rises above the critical value for temperature status warning and reaches a second, still higher critical value, then the scanner's output stage is turned off to prevent damage to the scanner. In this situation, the scanner's position is stationary and no longer under programmatic control. The laser should switched off immediately.

If the scanner's temperature drops again below the power-down threshold, the scanner's drive stage is automatically restarted and the scan head will resume normal operation.

Danger!

- If an output stage is shut down due to a scan range overrun or any other problem, laser power must be switched off immediately. Otherwise, health hazards and severe equipment damage can occur due to uncontrolled laser radiation.

3 Safety During Installation and Operation

The scan head is solely intended for commercial use. It is designed to be incorporated in a laser system and does not meet all criteria of a ready-to-use consumer product. Place the scan head into operation only after integration in a laser system which itself complies with the regulations of all applicable standards and directives (of the country concerned). The scan head is not qualified for use as a toy, in a domestic setting, nor in unfavorable environmental conditions (for example, outdoors). The operator is responsible for implementing measures to prevent such inappropriate usage.

The safety and warning notices in this manual are indicated by a symbol set against a gray background:

Instructions that may affect a person's health are marked with a warning triangle next to the word "Danger".

Instructions that recommend appropriate use of this device or warn of damage that may occur to it are identified by a circle with an "X" in it, next to the word "Caution".

To reduce the risk of injury, please observe the following guidelines.

3.1 Working Safely with Laser Radiation

The laser system's laser radiation presents serious health hazards, e.g. possible eye and skin injuries, injuries from toxic fumes generated by the laser process, or injuries from laser-radiation-induced fire. Therefore, all users must be trained in their usage of the scan head and laser system (particularly working safely with laser radiation) and must be provided with appropriate protective clothing. As a minimum, users must observe the following safety measures:

- For switched-on laser:
  - always wear protective glasses suitable for the laser's wavelength and power
  - never look into the laser beam
  - do not place parts of the body in the laser beam
- Only switch the laser on after power-up of the control PC for the scan head (also see "Safe Start-up and Shutdown Sequences" on page 35).
- For alignment work, reduce the laser power to a minimum value (see "Adjustment and Alignment" on page 34).
- During operation, do not adjust the laser power above the maximum allowed value (see "excelliSCAN 14 Technical Specifications" on page 44).
- Switch off the laser when it is not absolutely needed.
- Comply with all applicable laser safety regulations.

Furthermore, the laser system's safety-related functionality must minimize risk during normal operation, commissioning and maintenance work. The needed constructional measures depend on the laser's type and power and the application.

Needed constructional measures might include:

- Installation of necessary safety devices, e.g.:
  - An EMERGENCY STOP for the laser and the scan head (automatic and/or manual EMERGENCY STOP that immediately turns off, blocks or attenuates the laser beam and immediately switches off the scan head)
  - Shielding of the laser beam path for blocking external emission (e.g. a protective housing opaque to laser radiation, shutter or laser attenuator)
  - Safety devices that ensure safe switch-on and switch-off sequences of system components, that prevent unintended start-up of the laser and scan head and that prevent uncontrolled modification of laser parameters
  - Safety devices that also perform periodic functional checks (e.g. status monitoring) during operation and that possibly trigger an automatic EMERGENCY STOP upon detection of faults
- Installation of warning devices
- Installation of warning signs in areas of risk (typically the area of risk is where intended or unexpected laser radiation may occur):
  - Install warning signs displaying information for the applicable laser class (e.g. see IEC 60825-1).

Certain laser radiation hazards may occur if the scan head incurs damage (e.g. from damaged scan head optics). Therefore:

- Regularly inspect the scan head.
- Regularly check the entering laser beam's parameters (see page 44).
- Take into account that the scan head's housing does not offer 100% protection against laser radiation (under all possible conditions), particularly if the laser beam directly deflects onto the housing itself instead of being deflected toward the beam exit.

Special measures may be required when performing alignment work: The beam conditioning components need to be accessible for manual adjustments even while the laser is active.

3.2 Save Handling of the Scan Head

Improper handling can also damage the scan head. It contains sensitive optics. So treat them with care. Mechanical damage to the scan head impairs its quality and – in further use – may cause material damage and subsequent injuries (e.g. from laser radiation).

3.3 Electrical Installation Safety

Improper electrical installation induces health hazards from electric shock, shorts (and their consequential risks) etc., both during and after installation. Improper electrical installation can also result in functional faults or damage to the scan head. Subsequent usage may then have health consequences (e.g. via laser radiation).

Therefore, observe the following recommendations:

- Installation and commissioning should only be performed by persons with sufficient expertise in safe usage of electrical equipment.
- Perform installation and maintenance work only with switched-off laser and power supply.
- Comply with all ESD directives.
- Observe all notices in the chapter "Electrical Connections", on page 30.
- If the scan head is exposed to electromagnetic fields exceeding the 2014/30/EC (EMC) guidelines, then special shielding will be required.

3.4 Coolant

Danger!

Health damage due to conditioning agents

Some conditioning agents are harmful to health.

- Observe the manufacturer's safety instructions.

Caution!

Damage to the scan system due to contaminated coolant

Contaminants in the coolant such as solid suspended matter (e.g. sand, clay, bacteria), dissolved solids (e.g. bicarbonates, chlorides, sulphates, silicates) or dissolved gases (e.g. oxygen, carbon dioxide, nitrogen, hydrogen sulphide gas) can damage the cooling system.

As a result, overheating can cause damage to the scan system.

- Add conditioning agent to the coolant.

3.5 Concept for Safe Operation

System integrators (i.e. planners, developers and safety officers for the laser system in which the scan head will be integrated) bear sole responsibility for a safety concept that ensures safe operation of the laser system (and thus the scan head).

When developing a safety concept, the following should also be taken into account:

- Operating the scan head in high performance applications without the specified water cooling can lead to overheating and resulting damage of the scan head, which could have indirect health consequences.
- Operating the scan head without the specified air cooling can lead to overheating and resulting damage of the scan head, which could have indirect health consequences.
- The main prerequisites for safe operation are a correct installation, correct safety-related integration into the laser system (e.g. programming of process monitoring or laser safety functionality) and a correctly performed alignment. The corresponding work should only be performed by qualified specialists. Their training, knowledge, experience and familiarity with applicable regulations must enable them to perform the assigned work and self-reliantly recognize and avoid possible hazards. Only trained personnel should program the laser system.
  - Supply this guide in appropriate form to the involved specialists.
- The safety concept should also cover maintenance.

The scanning system complies with the requirements of the EU Directive on the restriction of the use of certain hazardous substances in electrical and electronic equipment (2011/65/EU), known as the RoHS Directive.

With the CE marking, we confirm that the marked products comply with the substance restrictions specified by the RoHS Directive.

4 Installation

Follow each step for preparation, mounting and electrical connection in the correct order as described in this chapter.

Danger!

- Make sure all components of the system (laser, controller, power supply, computer) are switched off before installation.
- During installation of the scan head, never stare directly into the laser beam or at any of its deflected radiation.
- Never place parts of the body into the direct path of the laser or its deflected radiation.
- After the scan head has been mounted, there is a cone-shaped hazardous laser output area. Do not stare into the laser or its deflected radiation. Keep all parts of the body away from the laser beam.
- Always turn on the PC controller and the scan head's power supply first before turning on the laser. Otherwise the laser beam might be reflected in an arbitrary direction.

Caution!

- Carefully take the scan head out of the packaging.
- Protect the scan head from dust and other contaminants.
- Never touch the optical surfaces of the deflection mirrors. Always use gloves and/or special lens cleaning tissues when handling the optical components.
- Follow the procedures in chapter 7.1 for periodically checking and cleaning the optics.

4.1 Checking the Specifications

Make sure the specifications of the scan head meet the requirements of your application (see "Technical Specifications" on page 44). If your application requires other specifications, then please contact SCANLAB.

4.2 Mounting the Objective

If the scan head is to be operated with an objective which is not factory-installed (or if an already-mounted objective is to be exchanged), then proceed as described in the following sections.

Objectives are mounted either directly or via an objective holder onto the housing's beam exit side. Many objectives require a mounting set, which (in addition to an objective holder) can include components for securing the objective and objective holder, as well as seal rings and space rings to ensure a safe distance between the objective and the deflection mirrors. Different objectives might require different mounting sets. Appropriate objective mounting sets are attached on the scan head, included with the objective, or obtainable from SCANLAB.

4.2.1 Objective Holder

If the objective mounting set includes an objective holder, install it as follows.

- Carefully remove (e.g. with a small screw driver) any protective covers from the scan head's objective opening.
- Lightly lubricate the objective holder's threads (e.g. with vacuum grease) to prevent cold welding of the objective holder to the housing.
- Screw the objective holder into the threads of the housing's beam exit side.

4.2.2 Objective

Caution!

- Before installing the objective, verify its compatibility with the mounted objective holder or beam exit threads. Otherwise, damage to the objective and scan head mirrors may result. In the event of questions, contact SCANLAB.

Before mounting, inspect the objective for scratches, lens defects and dirt. If necessary, clean as described in "Routine Maintenance of the Optical Surfaces" on page 39.

Mount the objective as follows:

- Carefully remove (e.g. with a small screw driver) any protective covers from the objective holder or the scan head's objective opening.
- Remove the protective cover from the objective's beam entrance side.
- Some setups require installation of one or more seal rings between the scan head or objective holder and the objective. Seal rings should be lightly lubricated (with vacuum grease). Otherwise, threading of the objective might be very difficult. Additionally, some setups require installation of one or more space rings between the scan head or objective holder and the objective to ensure a safe distance between the objective and the deflection mirrors. Check for corresponding accessories in the objective mounting set.

Caution!

- When installing the objective, ensure that all components of the corresponding objective mounting set are used. Failure to install included seal or space rings can lead to a mirror crash (resulting from inadequate distance between the deflection mirrors and the objective). Furthermore, the beam exit might not be optimally sealed.

- Some objectives are secured to their holders via screws (and washers). However, most objectives are directly screwed into the scan head or into the objective holder. Before screwing in the objective, lightly lubricate its threads (e.g. with vacuum grease) to prevent cold welding between the objective and its holder.

4.3 Layout and Dimensions

Figure 5 shows the layout of the scan head with the electrical connectors as well as the connections for water cooling and the connections for air cooling.

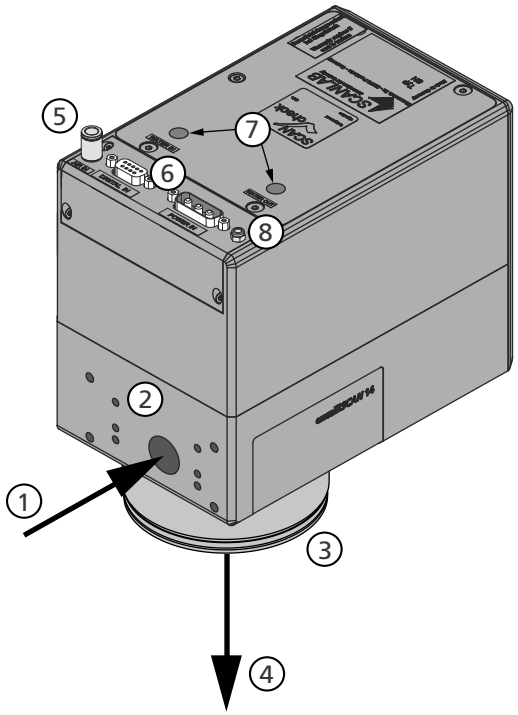

Legend

1 Entering beam
2 Beam entrance
3 Objective
4 Emerging beam
5 Connection for mirror air cooling
6 Electrical connections
7 Connections for cooling water
8 Air outlet for the mirror air cooling

5

Scan head overview with connector position

Figure 6 on page 22 shows the scan head with the parts which are important for mounting. The scan head installation is described in chapter "Mounting the Scan Head", on page 26.

Figure 7 on page 23 and figure 8 on page 24 show the dimensions necessary for mounting the scan head and adjusting the scan head with respect to the working area. Figure 7 depicts the scan head's mounting surface with its mounting bore holes and a bottom view of the scan head (beam exit side) which shows the displacement of the entry beam axis from the beam exit axis (The deflecting mirrors are in their neutral positions).

Figure 8 shows the following distances:

- the working distance A.
- the distance B between the axis of the input beam and the lower edge of the housing.
- the distance C between the axis of the input beam and the lowest edge of the objective or its enclosure.
- the diameter D which is the larger of the diameters of the objective and its enclosure.
- the distance E between the front edge of the beam entrance side and the axis of the beam exiting the scan head.

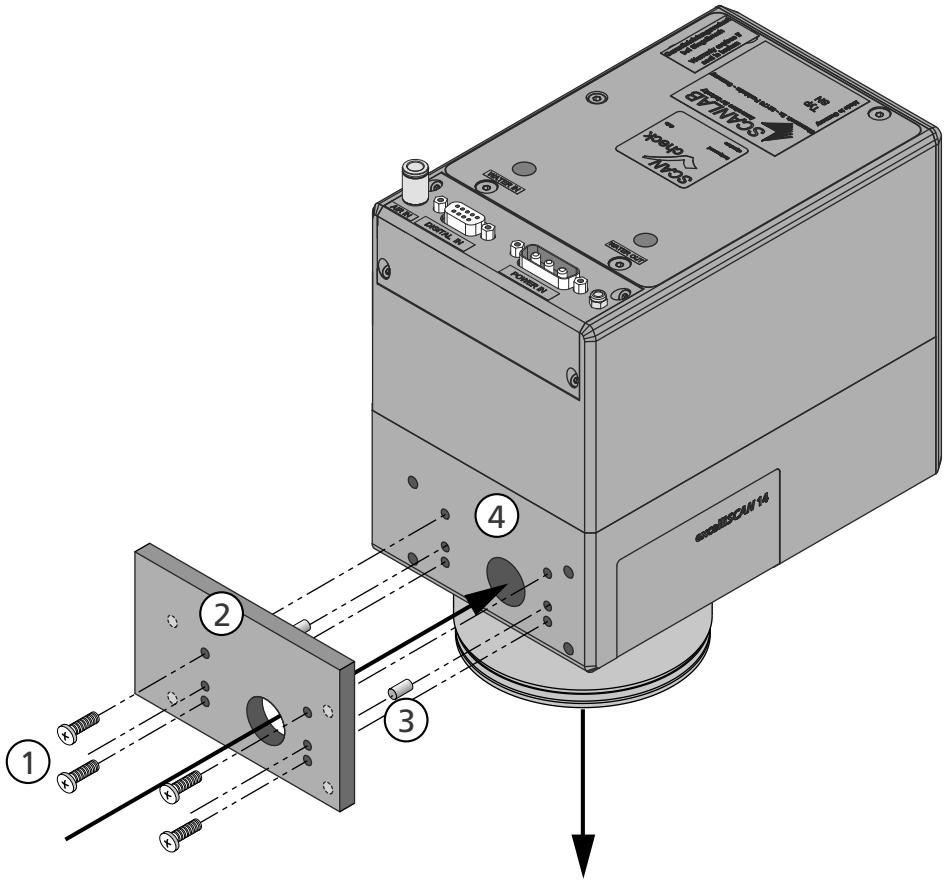

Legend

1 Mounting screws *
2 Laser system flange *
3 Alignment pins *
4 Beam entrance side with mounting bore holes

(* not included)

6

Scan head with mounting assembly (example mounting with M5 threads)

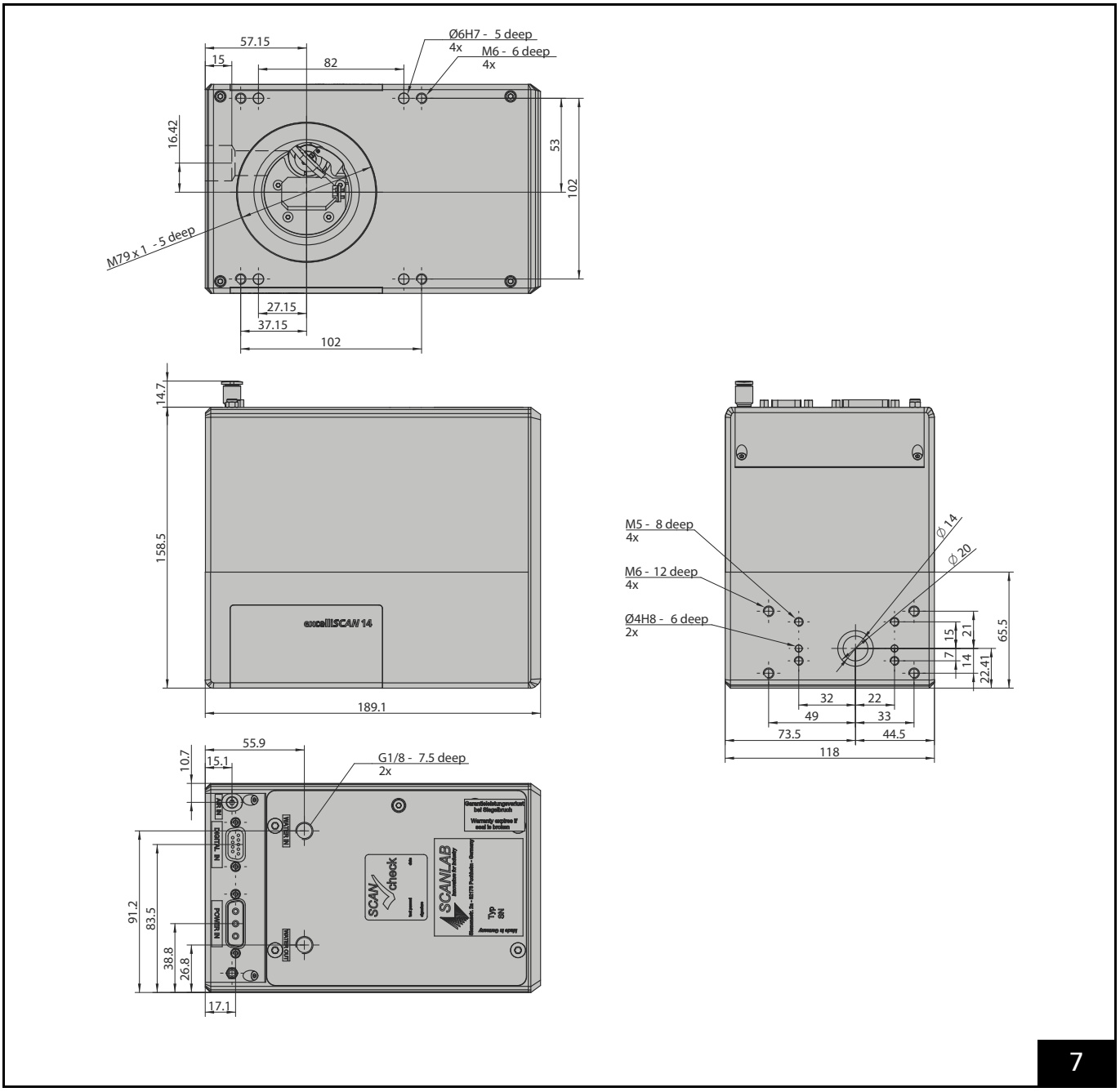

7

Side view, frontal view and bottom view (with beam displacement 16.42 mm) of the scan head (all dimensions in mm)

Legend

1 Beam entrance
2 Scan head
3 Objective (not shown true-to-scale)
4 Emerging beam
5 Image field

Dimensions

B = 22.41 mm
E = 57.15 mm

Note: drawing not true-to-scale

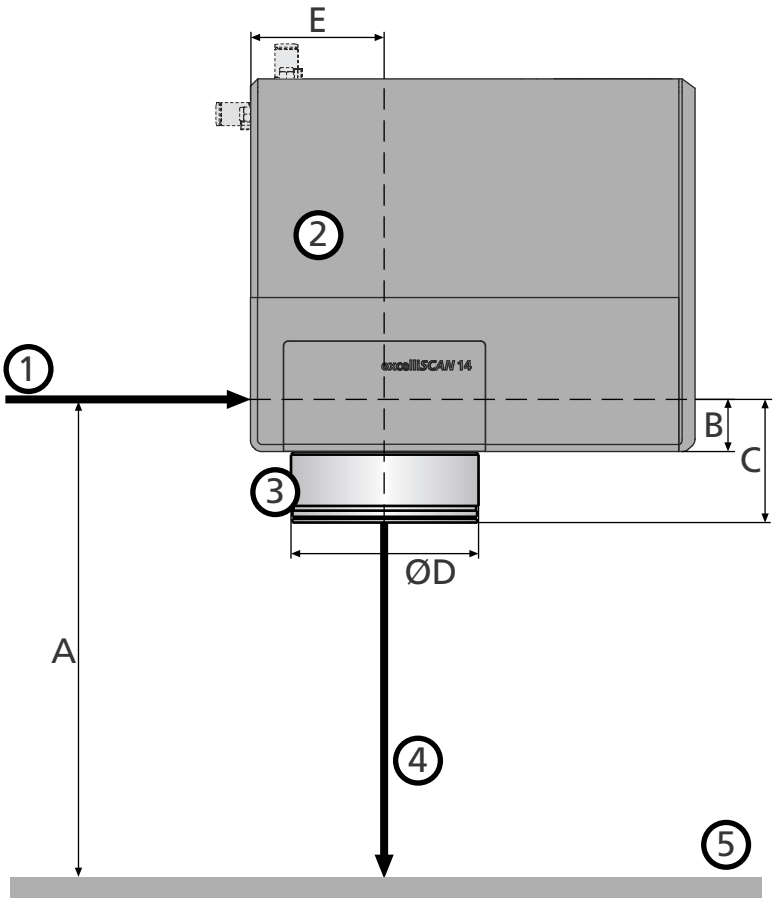

8

Working Distance A, distances B-E (see chapter 4.5) and dimensions (excelli*SCAN* 14)

4.4 Modification of the Connector Bracket

By default, the connectors of the excelli*SCAN* are on the top or on the beam entrance side. It's possible to place them on the respective other side by turning the connector bracket. For that, proceed as follows:

(1) Disconnect the air hoses from the air in connection and the air outlet.

(2) Unscrew the four M3 screws, which hold the connector bracket on the excelli*SCAN* housing and remove it carefully from the housing (figure 9). Take care not to damage the connected cables or hoses and not to lose the seals while removing.

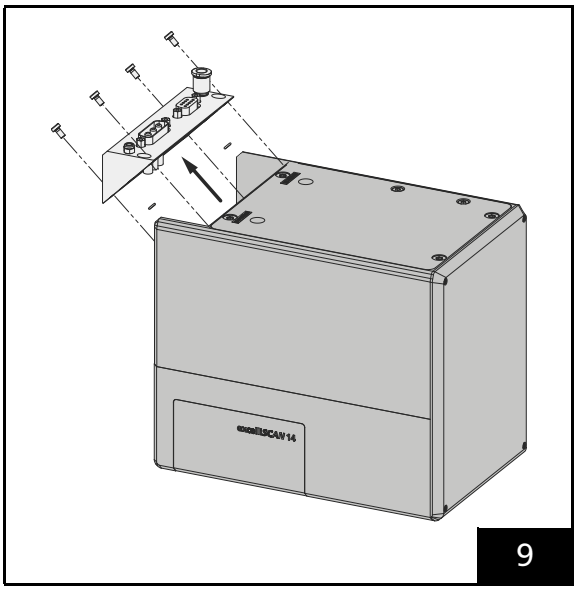

9

Removing of the connector bracket

(3) Turn the connector bracket so, that the connectors are on your desired side.

(4) Remove the air in connector and the air outlet from the connector bracket and swap their positions. The air in connector must always be on the left side of the connector bracket, the air outlet always on the right side.

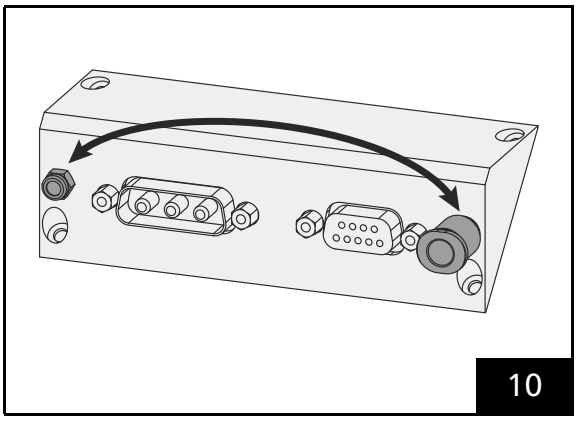

10

Changing of the AIR IN and AIR OUT connectors

(5) Place the connector bracket to the excelli*SCAN* housing and mount it with the four screws you have unscrewed before. Take care that all seals are placed correctly.

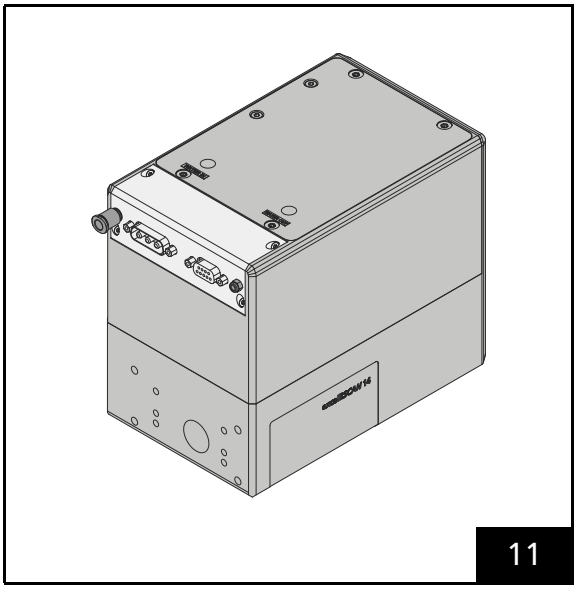

11

Correctly modified connector bracket

(6) Connect the air hoses to the air in connector and the air outlet again.

4.5 Mounting the Scan Head

Caution!

- To align and fasten the scan head, only use the alignment and mounting holes depicted in figure 6 on page 22. Other holes cannot be used for aligning and fastening the scan head or for any other purposes.

The illustrations for this section are found in the previous section, starting on page 21.

For mounting the scan head, the beam entrance side provides bore holes designed for attachment to a standardized flange on the laser system – see figure 6 on page 22. The laser system flange, alignment pins and mounting screws are not included in the package.

The dimensions of the beam entrance side and its bore holes are shown in figure 7 on page 23. The beam entry position is defined by two 4^{H8} alignment holes on the mounting bracket. The laser beam axis must be identical with the laser input axis of the scan head. To ensure this alignment, the laser system flange must have appropriate holes to accommodate two 4_{h6} alignment pins and four M5-threaded mounting screws (inside bore holes) or four M6-threaded mounting screws (outside bore holes).

On designing the attachment flange, also consider the position of the scan head's electrical connections (see figure 5 on page 21).

Mount the scan head in the following manner:

- Carefully remove the protective covering of the laser input hole (e.g. with a small screwdriver).
- Place two 4_{h6} alignment pins in the corresponding 4^{H8} alignment holes on the flange or beam entrance side.
- Place the scan head on the flange so that the alignment pins line up with the alignment holes on the flange and the beam entrance side. This way the scan head is aligned with respect to the laser.
- Fasten the scan head to the flange by installing four mounting screws with M5 or M6 threads into the corresponding threaded mounting holes.
- On mounting the scan head consider a correct alignment in respect to the entering laser beam (also see chapter "Adjustment and Alignment", on page 34) and in respect to the working field (also see figure 8 on page 24).

Mounting Options on the Beam Exit Side

There is the possibility to mount optional attachments (e.g. suctions, illuminations, or crossjets) on the beam exit side. Use the four 6^{H7} alingment holes and the four M6-threaded mounting holes.

Achieving the Protection Class

The IP protection class mentioned in chapter "excelliSCAN 14 Technical Specifications" on page 44 can only be achieved under following conditions:

- The beam entrance and beam exit must be sealed in accordance with the protection class IP 66.
- The air outlet valve figure 5 on page 21 must be replaced by a compressed air fitting (for example from FESTO).
- The cooling air existing excelli*SCAN* must be guided in an area from which no contamination can infiltrate the system.
- When using a filter or a check valve on the air outlet, the overpressure must not exceed 500 mbar in the system.
- The connectors for power supply and data transfer must have at least protection class IP 67.

4.6 Water Cooling

Active scan head cooling is essential in high-performance applications (e.g. continuous operation, highly dynamic scanning motions and/or high laser powers). When in operation, the scan head can dissipate considerable power. Furthermore, water cooling is particularly needed for active temperature stabilization in applications requiring high long-term repeatability.

Therefore, the scan head is equipped with connections and channels for water cooling the amplifier boards and the galvanometer scanners. To ensure adequate supply and circulation of coolant water, the scan head must be integrated into a cooling circuit.

Caution!

- Operate the scan head only with appropriate air and water cooling. Lack of cooling can extensively damage the scan head through overheating – particularly in high-performance applications (e.g. continuous operation, highly dynamic scanning motions and/or high laser powers).

In the technical specifications (page 44) the values specified for to-be-dissipated heat and required flow are typical (for absorption of modest laser power). Treat these values as a rough guide. The actual values in operation (and whether water cooling is even needed at all) strongly depend on the requirements of the specific application.

Appropriate coolant-water operational parameters can be determined experimentally during a test run. For this, the scan head should be operated for an extensive period under realistic conditions (scanner dynamics, laser power, environmental factors). During the test run, the scan head's TempOK and PowerOK status signals (see "XY2-100 Status Word" on page 9) should be queried to check if the scan head overheats during operation or experiences an emergency shut down (e.g. due to overheating). You can use the specifications as a guide for establishing the initial values of water-cooling operational parameters.

4.6.1 Selecting an Appropriate Cooling System

When selecting water-cooling components, observe the technical specifications (page 44) and in addition the following recommendations:

- The water coolant's flow rate, pressure and temperature should be adjustable at the chiller and monitored during operation.
- All cooling system components of the entire cooling circuit (cooling channels of the chiller and scan head, coolant lines and connectors, coolant) must be material-compatible to prevent corrosion-induced leaks in the cooling circuit. In particular, don't combine metals that create an electrochemical voltage series. The scan head's coolant-wetted materials are listed in the technical specifications (page 44).
- Flexible, UV-resistant, opaque plastic hoses with an inner diameter of at least 4 mm are suitable as coolant lines between the chiller and scan head. Materials such as polyamide, EPDM, NBR or PVC-U are appropriate, possibly stainless steel too (depending on the other used materials), but **not** zinc-plated steel piping, rubber, copper or soft PVC. Ensure that the coolant lines have a nominal pressure rating of PN10 or higher and are installed kink-free.
- For installing the coolant lines, you can screw suitable adapters into the housing's coolant connectors (G1/8x8 threads). Adapters are available from SCANLAB.
- Even if the laser equipment already has a cooling system (e.g. for laser cooling) of sufficient capacity to also cool the scan head, SCANLAB strongly recommends not using that cooling circuit for the scan head without conducting tests. Here, consultation with the existing cooling system's (or laser's) manufacturer is absolutely necessary. Scan head cooling can sometimes be achieved by adding a heat exchanger and a separate cooling circuit to the existing cooling system. Here, too, attention must be paid to material compatibility in the cooling circuit (see above).

For advice on appropriate cooling systems (in conjunction with the technical specifications (page 44), please contact the manufacturers of cooling systems (e.g. RIEDEL, Termotek AG, Thermo Fisher Scientific, DELTATHERM Hirmer GmbH, H.I.B

Systemtechnik GmbH or SCHWÄMMLE GmbH: www.riedel-cooling.com, www.termotek-ag.com, www.thermofisher.com, www.deltatherm.de, www.h-i-b.de, www.schwaemmle-gmbh.de).

4.6.2 Coolants

SCANLAB recommends demineralized water as the coolant, supplemented with a corrosion inhibitor and a biocidal additive. For example, the NALCO Yelmet Kit in conjunction with demineralized water is manufacturer-specified for conductance < 20 µS/cm and water hardness < 5 mg/l CaCO3 to offer effective protection against corrosion for stainless steel, copper, non-ferrous metals and aluminum as well as protection against bacteria, algae and fungi. The NALCO Yelmet Kit's organic corrosion inhibitor promotes rapid formation of an anti-corrosive film.

The coolant's quality needs to be checked at regular intervals. It might be necessary to periodically replace the coolant. Establish suitable maintenance intervals.

Caution!

- An unsuitable coolant can produce blockage or corrosion of the cooling channels.
- If, contrary to the above recommendations, ordinary tap water is used as coolant, then formation of lime and scale deposits can be expected (depending on the water's hardness and pH), along with increased galvanic corrosion. Furthermore, bacteria, algae and fungi can multiply. Water with excessive chloride will promote strong corrosion of stainless steel and non-ferrous metals, too. Increased corrosion can also be caused by ions of copper and other heavy metals.

Caution!

- Depending on the used materials (e.g. aluminum or copper), deionized water with low conductance (and without corrosion inhibitors) can also encourage excessive corrosion. Deionized water without corrosion inhibitors should ideally be used only with compatible materials such as stainless steel or nickel. It might be necessary to monitor and regulate the water coolant's conductance via suitable constructional measures.
- Adding a corrosion inhibitor will delay – but not prevent – galvanic corrosion. Corrosion inhibitors bind with and neutralize ions in solution. In the process, the inhibitors are consumed and must be replenished regularly.

For advice on appropriate coolants (in conjunction with the technical specifications on page 44), please contact the manufacturers of coolant additives (e.g. NALCO, Grünbeck or DOW Chemical Company: www.nalco.com, www.gruenbeck.de, www.dow.com).

4.6.3 Connecting the Cooling System

Connect the scan head to the cooling system as follows:

Caution!

- The cooling water circuit requires a defined flow direction. The water hose for cooling water inlet must always be connected to the IN connector and the water hose for cooling water outlet must always be connected to the OUT connector.

Prerequisites:

- Flexible cooling water hoses
  Inner diameter 6 mm
  Outer diameter 8 mm
- Adapter for connecting the cooling water hoses to the water connections (G1/8x10 thread) of the scan system

(1) Connect the adapter and cooling water hoses together.

(2) Screw the adapters into the water connections of the scan system.

(3) Connect the cooling water hoses to the water cooling system.

– Cooling water inlet to connection “IN”

– Cooling water return to connection “OUT”

(4) Ensure that the flow rate of the water cooling system is set correctly.

(5) Ensure that the temperature of the coolant in the water cooling system is set correctly.

The temperature of the water-cooled parts must not exceed 30 °C.

Caution!

- Ensure that the maximum intake pressure (see the technical specifications on page 44) is not exceeded and that condensation doesn’t form in the scan head. Otherwise, scan head damage may occur.
- To ensure sufficient cooling, the water flow should be monitored continuously during operation.

Caution!

- Fully remove the coolant prior to transport or long-term storage. Otherwise, scan head damage may occur. Comply with the respective safety and disposal notices.
- Some coolants can be harmful even in small quantities. Therefore, it’s essential for the scan head to be free of coolant residues prior to storage or transport.

4.7 Mirror Air Cooling

The air supply must be attached to the scan head’s compressed cooling air connection (see figure 5 on page 21). From there the air is guided to the two deflection mirrors. The cooling air inlet has push-in fitting (M5x6 threaded) to connect an air hose with an outside diameter of 6 mm.

To ensure sufficient cooling, an air flow rate of approximately 20 l/min at a pressure of $p < 2.5$ bar is required. The pressure of the air source should be adjustable.

The cooling air must be dry and totally free of dirt, dust and oil to avoid damage to the optical components. SCANLAB recommends a (normally multistage) dust filter system that provides cooling air in compliance with ISO 8573.1:2001 class 1.6.1. This applies if the supplied air has a temperature of at least 20°C. For lower cooling air temperatures, the pressure dew point should be at least 10 Kelvin lower than the cooling air temperature.

A flexible air hose with an inside diameter of 4 mm and an outside diameter of 6 mm should be used.

4.8 Electrical Connections

Figure 5 on page 21 shows the location of the electrical connectors on the scan head.

The scan head provides a 9-pin SL2-100 female SUB-D connector for digital data transfer and a 3-pin POWER IN male SUB-D connector (with high power contacts) for power supply. Figure 12 shows the pin assignments of the connectors.

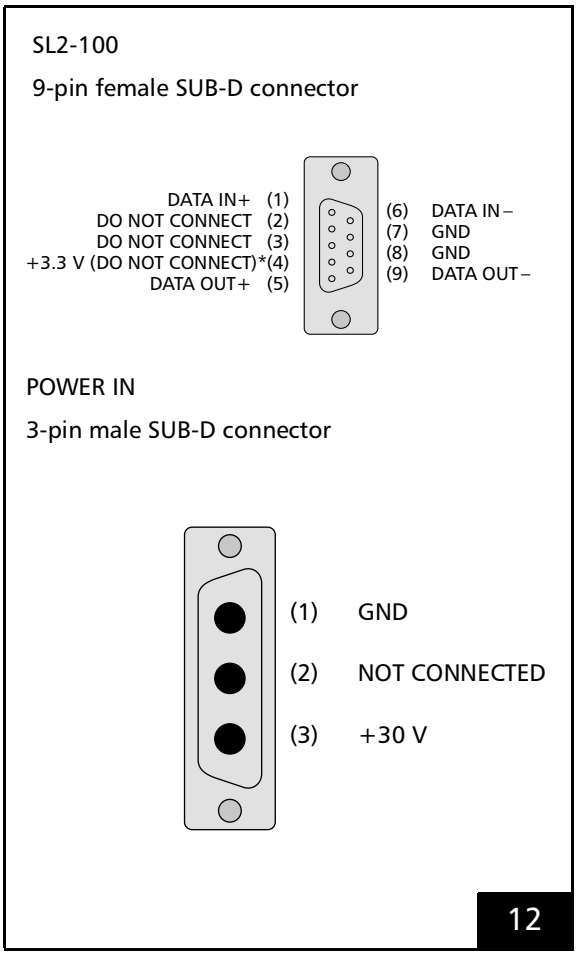

Pin out of electrical connectors on the scan head
(* see "Data Cable Guidelines", page 31)

4.8.1 Power Supply

Requirements

For power supply, the scan head requires a DC voltage of 30 V (29 - 33 V) with a maximum ripple of 100 mV_{pp}. The current consumption of the scan head can be up to 3 A (RMS). A power supply unit is therefore required which can provide at least 3 A (RMS) at 30 V output voltage.

The excelli*SCAN* provides reverse-polarity protection and start-up current limiting. The power supply and the SL2-100 data interface are galvanically isolated from each other.

The supply voltages are monitored by the excelli*SCAN*'s electronics (see section "Assuring Reliable Power Supply" on page 14).

The scan head is powered via a 30 V power supply (see figure 13). In general, the power supply is not included in the package, but suitable power supplies are available from SCANLAB. SCANLAB recommends to connect the 0 V connection of the power supply's output side (or the scan head's GND connection) to the mains's grounding wire (PE).

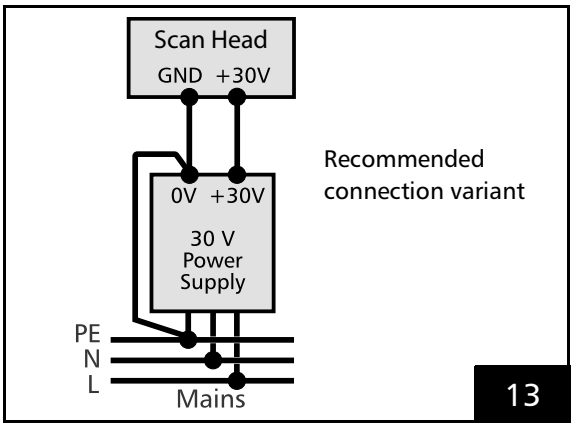

Connect the power supply's 0 V connection (or the scan head's GND connection) to the mains's grounding wire (PE).

Connections

The power signals should be assigned to the corresponding pins of the scan head's male high-current POWER IN connector (+30 V / GND, see figure 12).

- Make sure each power connection has the correct polarity.
- Connect each pole of the power source via an appropriate cable to all pins of the scan head's connector. The cable connecting the power supply and the scan head must be shielded and should have a cross-sectional area of at least 1.5 mm^2 per pole and a length not exceeding 6 meters. RFI must be minimized by connecting the cable's shielding at one end (utilizing a large surface area) to the power supply's metal shielding and at the scan head-end to the housing's SUB-D connector.
  Recommended connection:
  – connect the power source GND to the GND pin of the POWER IN connector
  – connect the +30 V power source to the +30 V pin of the POWER IN connector

Caution!

- Before proceeding with wiring the scan head, make sure none of the wires carry any voltages. The control electronics and the computer must be turned off.
- Turn off the power supply before disconnecting the power or the data cable.
- Follow all power supply electrical specifications exactly.

4.8.2 Data Cable Guidelines

Signal transfer between scan head and controller is realized via a data cable. This data cable is connected to the female SL2-100 connector.

The differential DATA IN input channel receives the the control values from the controller. The differential DATA OUT output channel returns the status signals to the controller. The 3.3 V voltage is supplied for SCANLAB's POF converter for optical data transmission (POF = Polymer Optical Fiber) – also see below. This voltage should not be used for other purposes.

Appropriate data cables, for either electrical transmission or optical fiber transmission, are obtainable from SCANLAB. The optical fiber, too, is attached via a 9-pin SUB-D connector. Optical conversion (POF conversion) for optical data transmission takes place in the SUB-D connector. The operating voltage for POF conversion is supplied at the SL2-100 connector and the RTC6 board's scan head connectors.

Data cables are generally not included in the package. SCANLAB recommends the following design (for electrical data transmission):

- The cable should be fitted with 9-pin male SUB-D connectors at both ends. The two channels DATA IN± and DATA OUT± (4 wires) must consist of twisted cable pairs and be *cross-connected* at both SUB-D connectors (e.g. so that the RTC6 board's DATA OUT signal flows to the scan system's DATA IN input). The cable length should not exceed 25 m. SCANLAB recommends a cable impedance of 110 Ω, independent from the cable length.
- The data cable must have coaxial copper braided shielding.
- The SUB-D connectors must have fully shielded metal housings.
- The electrical connection of the cable's braided shielding to the SUB-D housing should *not* be implemented as a wire. Instead, the cable's braided shielding should be *coaxially* connected to the SUB-D housing via shielded clamps.

Figure 14 shows the data cable layout and pin assignments.

- Connect the scan head via the data cable to the customer-specific controller.
- If an RTC board is used as the controller, then follow the installation instructions in the RTC manual.

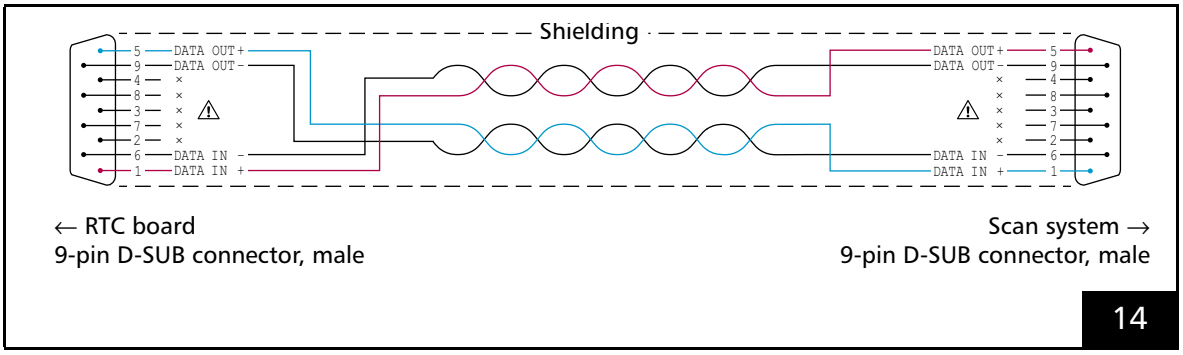

Data cable layout and pin assignments

4.9 Operating and Storage Conditions

For storage, operation and servicing, make sure the following environmental conditions are met:

- The storage temperature for the scan head should be between −35 °C and +60 °C. For storage, make sure to remove all water from the device's water-cooled parts.
- The operating temperature is 25 °C ± 10 °C.
- Protect the scan head from humidity, dust and corrosive vapors to avoid damage to the mirrors, optics and electronics.
- Avoid strong electromagnetic fields and static electricity. These can damage the electronics of the interface and amplifier boards.

Caution!

- Do not operate the scan head without appropriate air and water cooling.

5 Start-up and Operation

5.1 Checking the Installation

Before operating the scan head, carefully check the following:

- Were the mechanical installation and electrical wiring fully and correctly carried out as described in "Installation" on page 19?
- Is the scan head equipped with the correct objective and suitable mirrors? Therefore, please compare the technical specifications in chapter 9 on page 44.
- Are all optical components clean and free of dust? If necessary, clean the optical components as described in "Routine Maintenance of the Optical Surfaces" on page 39.
- Are air and water cooling facilities properly connected to the scan head?

5.2 Checking the Laser Parameters

The scan head's deflection mirrors are designed for a laser beam with defined parameters.

- Compare the technical specifications on page 44 with the requirements of your application. For information on tolerances and deviations, please contact SCANLAB.

Caution!

- Check, that the following specifications are not exceeded and are compatible to your system:
  - working wavelength
  - aperture
  - maximum laser power (with or without air cooling)
  - laser power density
  - beam diamater
  - damage threshold
  - maximum intake pressure of the cooling water

The values specified for the maximum laser power rating and the laser damage threshold only apply to the scan mirrors. They do not apply to the scan objective or other components. Typically, however, the damage thresholds of scan objectives are similar to that of scan mirrors.

Also be aware that additional optical components in the optical beam path can focus a part of the laser beam onto the mirror and thereby dramatically lower the effective damage threshold. For instance, the lenses or protective window of a scan objective – though coated with an antireflex coating – always reflect a certain fraction of the laser light. If the lenses are shaped such that the reflected laser light is focused onto the scan mirrors, the power density within this focus may be more than 1000 times larger than in the original beam and the effective damage threshold will be correspondingly reduced. In particular, the mirrors can be damaged by lasers with high pulse energies, short pulse lengths and good beam quality. Contamination on or damage to the optical surfaces of the objective or protective window can further increase residual reflectivity, which further increases the danger of mirror damage from back reflections.

Furthermore, the specified values only apply to clean and new mirrors. Mirror contamination (dust, fingerprints, cleaning residue, deposits from laser processing etc.) as well as mechanical damage (scratches, fractures, burn-in, damage by an improper cleaning procedure) can considerably reduce the damage threshold.

The specified damage threshold for pulsed operation is the maximum energy density for which no mirror-surface damage is expected for the specified wavelength and for two hundred pulses with the specified pulse length onto the same mirror spot (see note below).
In general, the damage threshold considerably decreases with an increasing number of laser pulses. In continuous operation, SCANLAB therefore recommends only applying suitably reduced energy densities (depending on the repetition rate and the laser parameters, typically five times smaller than the specified pulse damage threshold, if necessary even smaller).

The damage threshold for pulsed operation also decreases with decreasing pulse length. In particular, this effect must be considered for pico- or femto-second lasers.

Note: The specified damage threshold energy density corresponds to 0% damage probability (see ISO 11254). Here, damage means a permanent, laser induced surface modification. Test parameters: angle of incidence: 45°; pulse length (FWHM): as specified (see page 45); beam profile: TEM00; 200 pulses per test site; mirrors in clean condition; inspection method: Nomarski dark field microscope (150x).

5.3 Putting the cooling circuit into operation

(1) Flush the cooling circuit system completely with an aqueous 2-3% additive solution before filling for the first time.

(2) Fill the cooling circuit system with coolant.

(3) After the initial filling, carry out an analysis to ensure that the coolant meets all the required standard values and document the results of the analysis.

Carry out this analysis within 48 hours of the initial filling.

5.4 Adjustment and Alignment

To ensure optimum performance of the scanning system, it is crucial that the laser beam and the scan head are precisely aligned with respect to each other. Incorrect alignment might lead to the following effects:

- vignetting of the laser beam
- a large, irregular spot
- arbitrary translation of the image field

In most cases, vignetting will be the predominant effect. Vignetting occurs if the laser beam is not able to fully pass through or be reflected by the optical components. Part of the beam's diameter will be cut off, resulting in power loss and possible system damage due to excessive absorption of laser power.

To avoid significant vignetting, the system must be aligned as precisely as possible, particularly in terms of the beam position relative to the scan head's optical axis. If the laser beam profile is Gaussian, the maximum tolerances appropriate for most applications are:

- tilt of the laser beam: < 5 mrad
- displacement: < 0.3 mm

If you use a laser with "flat top" beam profile, it can be necessary to align the system with even higher precision. Avoid vignetting especially for a high power laser. Align carefully and – if necessary – reduce the beam diameter to an appropriate value.

Danger!

- Do not stare directly into the laser beam or at any of its deflected radiation. Keep all parts of the body away from direct contact with the laser beam or any of its deflected radiation.
- Adjust the output beam path of the scan head by means of a laser with a laser class not higher than 2. If this is not possible, the laser should be operated at the lowest power. Avoid dangerous deflected radiation!

Caution!

- Remove the protective covers from the scan head's beam entrance and beam exit or objective prior to first-time operation.

In order to achieve optimal processing quality, it may be necessary to fine-tune the working distance A. The working distance A is defined as the distance between the axis of the laser beam entering the scan head and the nominal working plane – see figure 8.

The working distance A can be directly adjusted in small steps. Alternatively, the working distance A can also be adjusted indirectly via the beam divergence – this can be achieved with the help of a beam expander or a variable focusing system (for example, SCANLAB's vario*SCAN* 20i) placed in front of the scan head's entrance aperture.

5.5 Checking the Parameters of Application Software

Before you start a laser application, you must carefully check your application software with regard to the maximum allowed scan angle and working area.

If scan angles larger than the *maximum allowed scan angle* indicated on page 44 are used, some vignetting inside the scan head can occur and damage to the interior of the scan head might result. If your application requires larger scan angles and a larger image field, then contact SCANLAB for guidance.

5.6 Safe Start-up and Shutdown Sequences

To assure safety during start-up, proceed exactly as follows:

(1) Start up the air cooling facilities and monitor the air flow to assure reliable cooling.

(2) Start up the water cooling facilities and monitor the flow to assure reliable cooling.

(3) Turn on the controller containing the RTC control board and start up the control software.

(4) Turn on the power supply for the scan head.

(5) Turn on the laser.

When shutting down the system, turn off the components exactly in reverse order.

Caution!

- Before first-time operation, check the polarities of the power supply connections for the scan head.
- Operate the scan head only with appropriate air and water cooling.

Danger!

- Always turn on the scan head control (controller with RTC control board and control software) and the power supply for the scan head prior to turning on the laser. Otherwise there is the risk that the laser beam might be deflected in an arbitrary direction.
- Power for the scan head must be applied only when scan head control is active.

5.6.1 Start-up duration

The excelli*SCAN* needs a few seconds to start up when it is switched on. This power-up is complete when the PowerOK status signal changes from 0 to 1. The start-up duration (from switching on the specified supply voltage until the status signal changes) is typically 12 s and maximum 25 s. Increased start-up durations (up to 25 s) occur only sporadically, but can

also occur with a scan system that usually only shows a small start-up time (e.g. 10 seconds). Therefore, always consider the maximum start-up duration when designing the system.

5.6.2 Warm-up Time

Depending on the application and accuracy requirements, SCANLAB recommends a minimum warm-up time of 30 minutes, preferably 3 hours, between switching on the positioning system and starting a laser scan application. Within this warm-up time, it is advisable to have the positioning system perform the same or similar scanning movements as during the actual laser scan application (but with the laser deactivated). If a cooling of the positioning system is planned, the cooling should already be activated at the beginning of the warm-up time. In order to avoid additional warm-up times during operation, it is usually recommended to continue the scan movement even during longer processing pauses (with deactivated laser) and, if applicable, to leave the cooling activated.

5.6.3 Minimum power-off duration

The excelli*SCAN* must not be switched on again immediately after switching it off. After disconnecting the supply voltage, a minimum pause (a minimum power-off duration) of 5 s must be observed before reconnecting the specified supply voltage. Note that primary side switching of the power supply can lead to completely other behavior of the scan system due to internal loading processes on the secondary side.

6 Optimizing the Application

6.1 Process Optimization via Process Simulation

During the testing phase of an application program simulations of the scanning process can be helpful. The scanning process is thereby executed with the laser switched-off and the actual scanned positions are read during execution and compared to the programmed set positions. Many process parameters (as settings for speeds, delays, etc.) can be simply optimized by evaluating such process simulations. In this way simulations can largely replace time-consuming inspection of processed material.

6.2 Process Monitoring

The scan head provides internal protective mechanisms for monitoring

- the power supply
- the scan range and proper scan operation
- the operating temperature

(also see chapter 2.3, "Internal Protective Functions", on page 14).

In addition, the user has various possibilities for monitoring the scan process as described in the following.

6.2.1 Software Monitoring

When the excelli*SCAN* is operated via an RTC6 board, then a number of various data signals can be evaluated for monitoring or test purposes.

For applications with critical scan precision requirements, the actual galvo scanner value can be monitored during the entire runtime of an application.

Alternatively, other data signals (e.g. scanner temperature) can be analyzed during normal operation or even when testing user applications.

Malfunctions can be quickly detected if you regularly query (and store) the excelli*SCAN*'s operational states before, after or during operations. Furthermore, determination of a malfunction's cause is simplified considerably (also see chapter 8.1, "Fault Diagnosis and Functional Test", on page 43).

If scan precision is monitored via the TrAck signal of the XY2-100 status word, the excelli*SCAN* also enables changing the TrAck threshold value via the command **control_command**. The default start behavior is for the scan head to set the threshold value to 0.28% of the full position range (i.e. 0.28% of 2^{16} counts) after every power-up or reset. If other threshold values are desired, they must be separately set for each axis.

6.2.2 Optical Process Monitoring

For camera-based observation of the scan head's working field SCANLAB offers a camera adapter. The camera adapter can be mounted between the scan head's beam entrance and the laser flange. Then the camera adapter's dichroitic beam splitter decouples light reflected from the illuminated workpiece and arriving the scan head's beam entrance via the scan objective and the scan mirrors. The light is decoupled from the beam path and then directed to the camera. Please contact SCANLAB for further information (see page 41).

6.3 Configuring the Start Behavior

In its default configuration the excelli*SCAN* is pre-configured by SCANLAB so that

- the scan head transmits a status word compliant with the XY2-100 protocol on all receive channels (also see section "Returned Signals" on page 9),
- a TrAck threshold value of 0.28% of the full position range (i.e. 0.28% of 2^{16} counts) is set (also see chapter 6.2, "Process Monitoring", on page 37),

The settings can be changed via the **control_command**. The changed settings are only temporary, however they can be additionally saved as starting settings for subsequent power-ups or resets (power supply switched off and switched on) via the **control_command**. For details see the separate document "excelli*SCAN* Scan Heads – Functional Principle of *SCAN*ahead Servo Control and Operation by RTC6 Boards".

As long as the start behavior is not changed as described, the scan head starts with the starting settings pre-configured by SCANLAB on every power-up or reset.

7 Routine Maintenance and Customer Service

7.1 Routine Maintenance of the Optical Surfaces

Dirty objectives and mirrors increase the absorption of laser power by their respective optical surfaces. Dirt, dust and other contaminants can distort the laser beam, burn into the surface and damage the optical elements. The warranty does not cover any damage due to improper use, cleaning or handling.

Danger!

- Never stare at the laser beam or its deflected radiation when performing routine maintenance of the scan head. Keep all parts of the body away from direct laser beams or deflected radiation. When the laser beam is not required, turn it off or reliably block it via a shutter to prevent its entry into the scan head.

7.1.1 Routine Maintenance of the Mirrors

The deflection mirrors are especially sensitive components and should not be touched or removed from the scan head. Nevertheless, you must regularly inspect the mirrors for dirt, dust and other contaminants. The mirrors must also be inspected after a long storage time.

If inspection reveals dust particles, then remove them by blowing air on the mirror's surface with the help of a rubber squeeze bulb or a source of compressed clean air.

If the dust cannot be removed in this manner, or if inspection reveals more serious contamination, then contact SCANLAB for guidance. In extreme cases, the complete scan head must be returned to SCANLAB for inspection and cleaning of the mirrors. However, in some situations SCANLAB might be able to recommend a user-performed special cleaning procedure.

Caution!

- Improper cleaning procedures – for instance cleaning cleaning metal-coated mirrors with acetone – can cause irreparable damages to the mirror coatings. Therefore, if the above-mentioned cleaning procedure (with air) is insufficient, always contact SCANLAB for guidance before you start to perform any further cleaning procedures yourself.

7.1.2 Routine Maintenance of the Objective's Optical Surface

The outermost optical surface of the scan head's objective is cleanable by the user. Regularly check the scan head's objective.

If dirt, dust or other contaminants are found, clean the objective's optical surface as follows: Using a rubber squeeze bulb or compressed clean air, blow air on the objective's surface to remove dust and dirt particles. If the objective is still not clean, then use solvent and lens cleaning tissues as described below:

(1) Create a lens-tissue brush by folding a clean lens tissue so that the fold is about half as wide as the objective's lens surface.

(2) Dampen the lens-tissue brush with solvent. Don't use too much solvent, because otherwise drying marks might appear.

(3) Carefully grip one end of the dampened lens-tissue brush without touching any part of the tissue that will touch the lens surface.

(4) Place the dampened lens-tissue brush in the center of the objective's lens surface. Then use a *circular* motion to wipe slowly but steadily from the center of the optic around to the outer edges.

Repeat the above procedure until the objective's optical surface is completely clean. For each cleaning swipe, create a new lens-tissue brush.

Cleaning Notes

- Avoid skin contact with the optic.
- Use only clean lint-free tissues specially manufactured for cleaning optics (e.g. "Kodak lens cleaning paper"). Always use lens tissues with a solvent, because dry tissue can scratch optical surfaces.
- Use a solvent such as acetone or isopropanol of high purity (evaporation residue < 0.001%). Read and follow the safety advice and warnings for the solvents you will be using.
- Use clean gloves or finger cots that are impermeable to the organic cleaning solvents you will be using.
- Always wipe slowly but steadily, using a circular motion from the center of the optic around to the outer edges. Do not rub back and forth!
- Only wipe with slight pressure!

7.2 Routine Maintenance of the coolant

7.2.1 Checking the coolant

Monthly:

(1) Check the pH value, electrical conductivity and total hardness of the coolant.

(2) If the coolant deviates significantly from the standard values, replace it completely.

(3) If there is a strong odor, replace the coolant completely.

7.2.2 Analyzing the coolant

Every 6 months (preferably every 3 months):

(1) Carry out an analysis to ensure that the coolant meets all the required standard values and document the results of the analysis.

(2) If there are significant deviations from the standard values, replace the coolant completely.

(3) If there is a strong odor, replace the coolant completely.

7.2.3 Replacing the coolant

Annually:

(1) Replace the coolant completely.

7.3 Customer Service

Servicing and Repairs

Except for routine maintenance of the optical surfaces, the scan head does not contain user-serviceable internal parts. All servicing and repairs should be performed only at SCANLAB. Only SCANLAB has the proper test facilities and procedures to service, repair and calibrate the system optimally.

Product Warranty

SCANLAB guarantees this product to be free of defects in manufacturing and material. The warranty is valid for 12 months after delivery. Repairs covered under the warranty will be performed at SCANLAB.

The scope of the warranty is limited to repair or replacement of the SCANLAB product.

SCANLAB is responsible for the return delivery of products repaired under warranty; the customer is responsible for delivery to SCANLAB.

SCANLAB will not be held responsible:

- when the product has been damaged through misuse or improper operation
- for damage due to improper laser power (e.g. focused beam on optical surfaces) or improper alignment
- for damage to optical components (mirrors, objective, etc.) caused by improper handling or cleaning
- for consequential damages
- if the scan head has been altered
- if the warranty seal on the scan head's housing has been broken

If a returned scan head must first be brought into a serviceable state by SCANLAB (e.g. by removing alignment pins or attachment hardware and cleaning the unit) before servicing can begin, then the customer must bear the additional cost.

Contacting SCANLAB

For service, repairs, advice or information, simply contact SCANLAB using one of the contact possibilities listed below:

SCANLAB GmbH
Siemensstr. 2a
82178 Puchheim
Germany

Tel. +49 (89) 800 746-0
Fax: +49 (89) 800 746-199

info@scanlab.de
www.scanlab.de

Product Disposal

The excelli*SCAN* can be returned to SCANLAB for a fee to be properly disposed of in compliance with environmental regulations.

8 Troubleshooting

If problems occur while operating this device, verify that all operating instructions have been adhered to and then carry out the following troubleshooting procedures:

Problem	Possible Cause	Remedy
Low laser power	Dirty objective	Clean as described in "Routine Maintenance of the Optical Surfaces" on page 39
	Altered controller software parameters	Check input parameters
	Dirty or damaged mirror	Check mirrors. If they are contaminated, call SCANLAB for guidance. Return damaged scan head mirrors for repair.
Changed laser spot	Dirty or damaged objective	Clean as described in "Routine Maintenance of the Optical Surfaces" on page 39
	Dirty or damaged mirror	Check mirrors. If they are contaminated, call SCANLAB for guidance. Return damaged scan head mirrors for repair.
	Laser out of adjustment	Adjust laser
No laser beam	Problem with the laser	Check laser and electrical connections
	Problem with the laser controller	If the RTC board is used, check all electrical connections and the power supply
	Laser beam path blocked or shutter closed	Check laser beam path
Scan head does not steer laser beam in one or both directions	Problem with the scan head controller	Check power and data cables. Check software commands. Switch off scan head, and then restart.
Scan head stopped responding	Supply voltage of the DSP is too low (see page 11)	Check power and data cables. ensure correct supply voltages, switch off scan head, and then restart

If the problems persist, please send the scan head to customer service.

8.1 Fault Diagnosis and Functional Test

If a problem occurs, the excelli*SCAN*'s versatile status return functions can be used for scan head diagnosis, too. These functions allow reading such data as:

- the current operating state
- the operating state at the moment the most recent operation interruption occurred
- an event code indicating which particular event caused the scan head to enter a temporary or permanent error state.

Also see the section "Returned Signals" on page 9.

In general, all status informations can be read even after the scan head enters a temporary or permanent error state due to an internal protective mechanism (provided that the scan head is still sufficiently powered).

To verify that data transfer capability between the RTC6 and the scan head is intact, an 8-bit value – separately for each axis – can transmitted to the scan head via the command **control_command**. Subsequently, a 16-bit value will be returned on the corresponding status channel: If data transfer is error-free, then the upper 8 bits of the returned 16-bit value will be identical with the originally sent 8-bit value, and the lower 8 bits will be identical with the complement of the sent 8-bit value.

These 16-bit values will be returned until the **control_command** is used to select another return data type.

The **control_command** also allows the prior data type to be temporarily stored for later retrieval. This simplifies restoring the status return behavior in effect prior to the data transfer verification.

9 excelli*SCAN* 14 Technical Specifications

(all angle specifications optical)

SCANLAB ID number

of scan head	143094

Aperture

maximum diameter of the laser beam inside the scan head	14 mm

Control

Input and Output Signals	SL2-100
Maximum range for control values (1)	–524288 to +524287
Calibration	±0.408 rad with ±503316 bit
Maximum allowed scan angle (vignetting insignificant) (2)	
- without objective	±0.36 rad

Power supply

Supply voltage	30 V DC (29 - 33 V)
Current consumption	up to 3 A (RMS)

Optical Performance

Gain error	<5 mrad
Zero offset	<5 mrad
Skew	<1.5 mrad
Nonlinearity	<0.5 mrad/44°
Repeatability (RMS)	< 0.4 µrad
Dither (RMS)	< 1.6 µrad

Temperature drift (with water cooling)	
- Offset	10 µrad/K
- Gain	5 ppm/K
8-h drift (after 30 min warm-up) (at constant ambient temperature and load, with water cooling)	
- Offset	20 µrad/8h
- Gain	20 ppm/8h
24-h drift (after 3 hours warm-up) (at constant ambient temperature and load, with water cooling)	
- Offset	20 µrad/24h
- Gain	20 ppm/24h

Tuning Specifications (Dynamic Performance)

Tuning	128491
Tracking error	0 ms
Preview-Time	1.2 ms
Acceleration (3)	320,000 rad/s^2
Maximum speed (3)	200 rad/s
Typical speeds (example values with 160 mm objective)	
• Positioning, jump & shoot	< 30 m/s
• Line scan / raster scan	< 30 m/s
• Typical vector marking	< 4 m/s
Positioning times (example values with 160 mm objective)	
• 1 mm jump width	0.28 ms
• 10 mm jump width	0.88 ms
• 100 mm jump width	3.75 ms

(1) This maximum range for input values should be regarded as a theoretical range. Due to the danger of vignetting by the mirrors (also see page 6), the specified maximum scan angle must never be exceeded.

(2) Theoretical value (see page 6 and page 7)

(3) Conversion rad/s or rad/s^2 to m/s:
Value in rad/s$^{(2)}$ × focal length of the objectiv in m

Mirror	
Coating	dielectrical high performance coating
	high flatness
Working wavelength	1064 nm
Reflectivity	
– at 1064 nm	more than 99.5% per mirror, over the full range of angles
– at 630 nm - 670 nm	more than 70% per mirror
Maximum allowed average laser power	250 W
– with air cooling	500 W
Maximum allowed laser power density continuous wave	500 W/cm^2
– with air cooling	1000 W/cm^2
Damage threshold for pulsed operation (with specified working wavelength, pulse length 10 ns, 200 on 1, also see page 33)	2.5 J/cm^2

Water Cooling	
Cooling load (to-be-dissipated heat)	typically < 100 W [(a)]
Flow volume	5 l/min
	(with a pressure drop < 0.1 bar and a maximum pressure of 4 bar
Temperature of the coolant	20 to 25 °C (constant at ± 1 °C)
Volume of scan head coolant channels	max. 200 ml
Pressure loss within scan head	
at 3 l/min	max. 0.4 bar
at 5 l/min	max. 0.7 bar
Maximum intake pressure	4 bar
Coolant-wetted materials (heat sink / hose screws / hoses / O rings):	stainless steel (A2) / stainless steel (A3), Nickel-plated brass
	Fluorine rubber (FPM)
	Acrylonitrile butadiene rubber (NBR)
	Polyamide (PA)
	Polyurethane (PU-H)
Connection bore holes	G1/8 threads, 8 mm deep
Recommended fitting material	stainless steel

(a) application-dependent: high-performance applications (continuous operation, highly dynamic scanning motions, high laser powers etc.) might increase the amount of heat requiring dissipation.

Coolant

Water type	Fully demineralized water with added conditioning agents
Appearance	Clear, without suspended solids and sediment
Color	Colorless
Odor	Without
pH value	8.5 to 9.5
Electrical conductivity	< 20 mS/m
Total hardness	2.8 to < 5.6 °dH
Oxygen content	> 1 g/m^3
Iron content	< 0.5 g/m^3
Copper content	< 0.2 g/m^3
Zinc content	< 0.2 g/m^3
Aluminum content	< 0.2 g/m^3
Ammonium content	< 0.5 g/m^3
Chloride content	< 10 ppm
Sulphate content	< 20 ppm
Colony forming units per ml	< 1000
TOC value of the untreated water	< 25 g/m^3

Conditioning agent

Limestone inhibitor and corrosion inhibitor	Protection of the cooling system against deposits (e.g. limescale) and corrosion. The agents have a high protective effect at low concentrations and prevent the acceleration of corrosion of other materials.
Biocide to combat biological contamination	Protection of the cooling system against algae, bacteria and fungi. Shock dosing with a low dosing quantity offers the following advantages: Reduced habituation effect Effectiveness over a longer period of time

Conditioning agents recommended by SCANLAB

Corrosion inhibitor	Manufacturer: FUCHS LUBRICANTS GERMANY GmbH Product: ANTICORIT SKR 3001 Manufacturer: Nalco Water Product: Nalco 73199
Biocide	Manufacturer: FUCHS LUBRICANTS GERMANY GmbH Product: ACTICIDE MBS Manufacturer: Nalco Water Product: Nalco 7330

Mirror Air Cooling Specifications

Rate of flow	20 l/min (p < 2.5 bar)

Weight

without objective	7 kg

Protection Class

excelli*SCAN*	IP 66(1)

Operating and Storage Conditions

Operating temperature	25 °C ± 10 °C
Storage temperature	−35 °C to +60 °C
Environmental conditions	non-condensing, non-corrosive

(1) Only achievable under certain conditions, see "Achieving the Protection Class" on page 26.