*SCAN*cube IV 14 (ID# 148094) – Prototype

digital scan system, 355 nm, XY2-100

Part 2: Specific Description

SCANLAB GmbH
Siemensstr. 2a
82178 Puchheim
Germany

Tel. +49 (89) 800 746-0
Fax: +49 (89) 800 746-199

info@scanlab.de
www.scanlab.de

© SCANLAB GmbH 2025

(Doc. Rev. 2.3 e - March 10, 2025)

SCANLAB reserves the right to change the information in this document without notice.
No part of this manual may be processed, reproduced or distributed in any form (photocopy, print, microfilm or by any other means), electronic or mechanical, for any purpose without the written permission of SCANLAB GmbH.
*SCAN*cube is a registered trademark of SCANLAB GmbH.
Other mentioned trademarks are hereby acknowledged as properties of their respective owners.

Table of Contents

1 Introduction 4
1.1 Content of this Manual 4
1.2 Use and Distribution of this Manual 4
1.3 Additional Manuals 4
1.4 Manufacturer 4
2 Identification Plate with Serial Number 5
3 Dimensions 6
4 Electrical Connections 8
4.1 Power Supply 8
4.1.1 Pin-Out 8
4.1.2 Connection 9
4.2 Data Transfer 10
4.2.1 Data Cable Guidlines 10
4.2.2 Connection 11
4.3 Y Cable (optional) 12
5 Controlling the Scan System 13
5.1 Data Transmission 13
5.2 Position Signals, Image Field and X-Y Reference System 13
5.3 Monitoring of the Scan System with Integrated Sensors (optional) 15
5.4 Status Signals 16
5.5 Pre-processing tracking error control 16
5.5.1 Adjustment of the control for systems with pre-processing tracking error control 16
6 *SCAN*cube IV 14 - Technical Specifications 18

1 Introduction

1.1 Content of this Manual

This manual (Part 2 of 2) is the specific description of SCANLAB's *SCAN*cube IV 14 scan head and contains the specifications of the delivered system.

SCANLAB reserves the right to update this operating manual at any time and without notification. The information in this manual supersedes the content of previous manuals.

The product status is "prototype", therefore modifications are possible.

1.2 Use and Distribution of this Manual

This manual is part of the product. Read it carefully before proceeding to plan, install and operate the scan system. If there are any questions regarding the contents of this manual, please contact SCANLAB (see chapter 1.4).

This manual is particularly intended for system integrators, i.e. laser system planners, developers and safety officers, as well as persons involved in scan system installation, start-up, maintenance, deinstallation, storage or transport preparation. It is the product purchaser's/operator's responsibility to provide access to this manual (or relevant parts) in suitable form to all involved persons.

SCANLAB typically supplies this manual in electronic form (as a PDF file).

- Provide access to this manual in suitable form to all involved persons (see above).
- Maintain accessibility to this manual even after planning.
- This manual should accompany the scan system if ownership changes hands.

1.3 Additional Manuals

- Part 1: Installation and Operation
  The general description provides a product overview, a functional description of safety guidelines, the description of installation and start-up as well as maintenance.

1.4 Manufacturer

SCANLAB GmbH

Siemensstr. 2a
82178 Puchheim
Germany

Tel. +49 (89) 800 746-0
Fax: +49 (89) 800 746-199

info@scanlab.de
www.scanlab.de

2 Identification Plate with Serial Number

- Type of the scan system
- Serial number (SN, also as barcode)
- Wave length (λ)

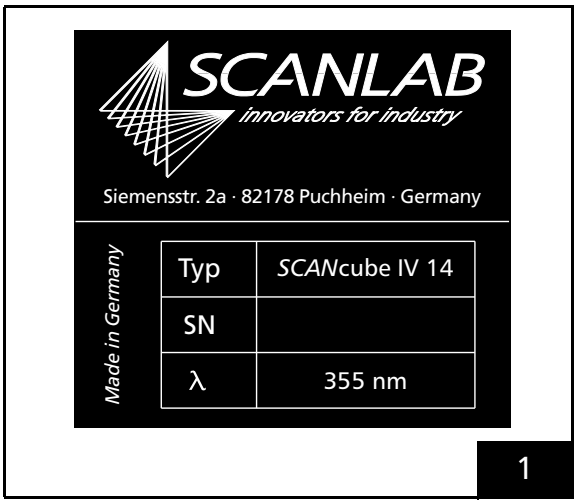

Identification plate with serial number (SN)

3 Dimensions

Figure 2 and figure 3 shows the dimensions necessary for mounting the scan head and adjusting the scan head with respect to the working area. Additionally figure 2 shows the mounting surface with its mounting bore holes and a bottom view of the scan head (beam exit side) which shows the displacement of the entry beam axis from the beam exit axis. The deflecting mirrors are in their neutral positions.

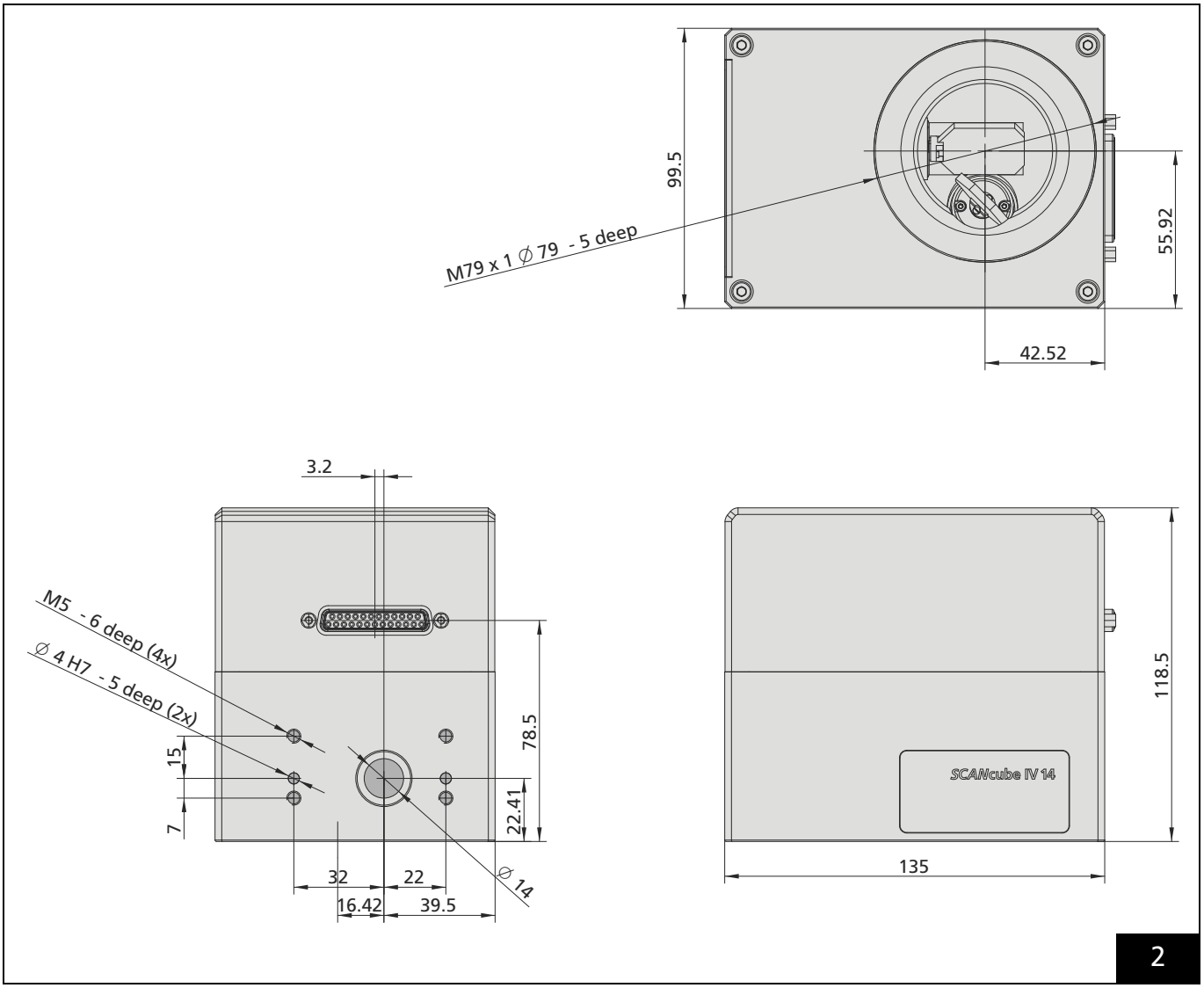

Side view, frontal view and bottom view (with beam displacement 16,42 mm) of the scan head (all dimensions in mm)

Figure 3 shows the following distances for the system integration:

- the working distance A
- the distance B between the axis of the input beam and the lower edge of the housing
- the distance C between the axis of the input beam and the lowest edge of the objective or its enclosure
- the diameter D which is the larger of the diameters of the objective and its enclosure
- the distance E between the front edge of the beam entrance side and the axis of the beam exiting the scan head.

Legend

1 Beam entrance
2 Scan head
3 Objective (not shown true-to-scale)
4 Emerging beam
5 Image field

Dimensions

B = 22.41 mm
E = 42.52 mm

Note: drawing not true-to-scale

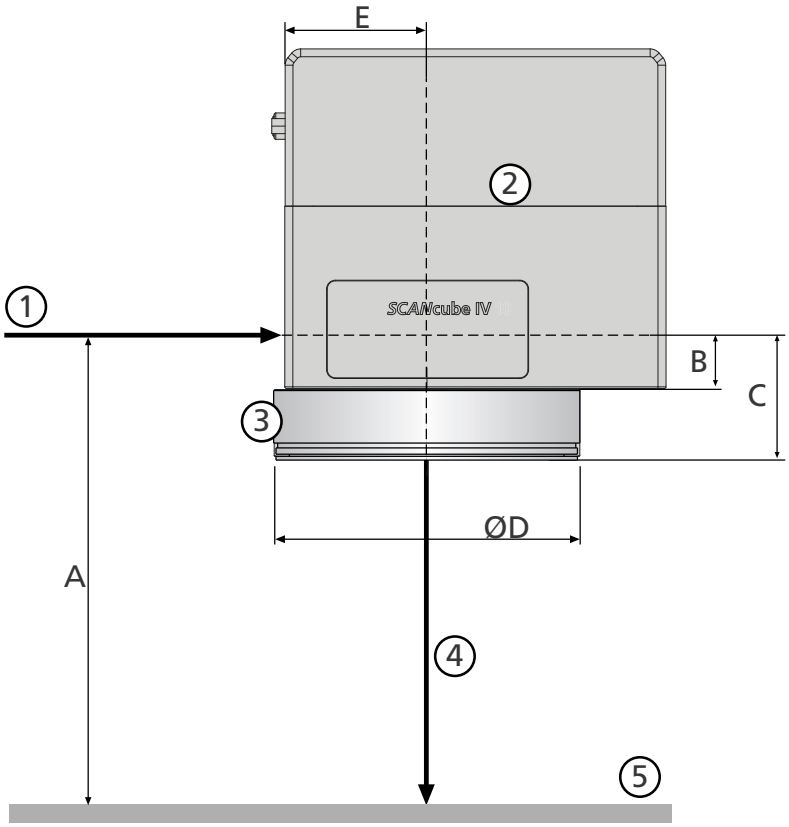

3

Working distance A, and distances B-E

4 Electrical Connections

The scan head provides a 25-pin female D-SUB connector for power supply and digital data transfer, which follows the XY2-100 protocoll.

Configure a suitable cable for the connection of the power supply and the data transfer. A suitable Y cable is available from SCANLAB, see chapter 4.3 "Y Cable (optional)" on page 12.

4.1 Power Supply

The scan head requires a power supply of 30 V (29 - 33 V) and a maximum current of 3 A. The residual ripple of the power source should not exceed 100 mV_{SS}.

Only use a power supply with soft start.

The scan head is powered via a 30 V power supply (see figure 4). In general, the power supply is not included in the package, but suitable power supplies are available from SCANLAB. SCANLAB recommends to connect the 0 V connection of the power supply's output side (or the scan head's GND connection) to the mains's grounding wire (PE).

There should be no more than ±5 V potential difference between the ground of the scan head's power source and the ground of the control computer. Usually the ground of the control computer is connected to the mains's grounding wire (PE) via the computer's mains cable. Therefore, excessive potential differences between the two grounds can be generally avoided by connecting the power supply's 0 V connection to the mains's grounding wire (PE) via a short as possible cable and as close as possible to the PC ground.

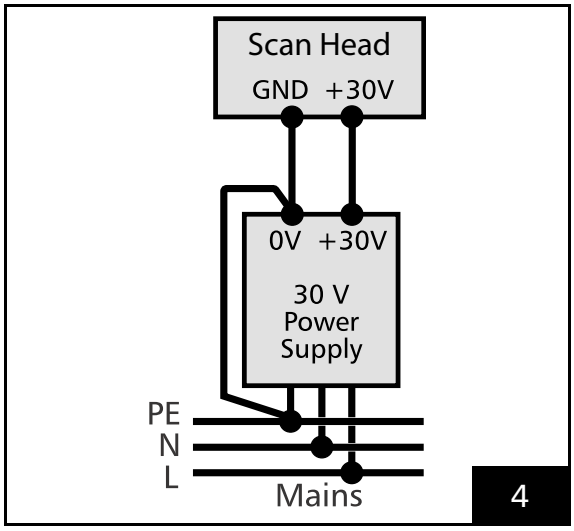

Connect the power supply's 0 V connection (or the scan head's GND connection) to the mains's grounding wire (PE).

4.1.1 Pin-Out

The scan head provides a 25-pin female D-SUB connector for data transfer and power supply (30 V). Figure 8 shows the pin assignments of the connector.

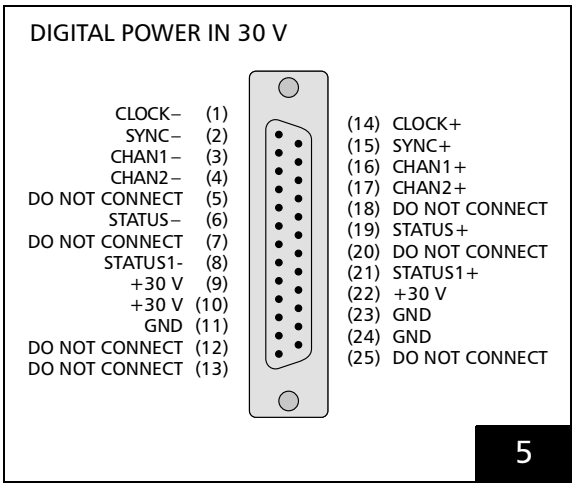

Pin-out of the 25-pin female D-SUB connector
(* see figure 6)

4.1.2 Connection

Caution!

- Before proceeding with wiring the scan head, make sure none of the wires carry any voltages. The control electronics and the computer must be turned off.
- Turn off the power supply before disconnecting the power or the data cable.
- Follow all power supply electrical specifications exactly.

Connect the power supply to the respective pins of the 25-pin female D-SUB connector (+30 V / GND, see figure 5) as follows:

- Make sure each power connection has the correct polarity.
- Connect each pole of the power source via an appropriate cable to all pins of the scan head's connector. The cable connecting the power supply and the scan head must be shielded and should have a cross-sectional area of at least 1.5 mm^2 per pole and a length not exceeding 6 meters. RFI must be minimized by connecting the cable's shielding at one end (utilizing a large surface area) to the power supply's metal shielding and at the scanhead-end to the housing's SUB-D connector.
  - connect the power source GND to all three GND pins of the 25-pin female D-SUB connector
  - connect the +30 V power source to all three +30 V pins of the 25-pin female D-SUB connector

4.2 Data Transfer

The signals between scan head and controller are transmmitted by a data cable (when controlling with an RTC5 board, an XY2-100 converter is additionally necessary). For a description of the transmitted signals, see chapter 5 "Controlling the Scan System" on page 13.

4.2.1 Data Cable Guidlines

Data cables are generally not included in the package. SCANLAB recommends the following design (for electrical data transmission):

- The cable should not be longer than 10 m. If a longer data cable is needed, the synchronization of the (bidirectional) communication between scan head and RTC control board should be adjusted. If you control the scan head via an RTC3, RTC4 or RTC *SCAN*alone board, this adjustment can be realized via the RTC command **set_piso_control** (see RTC manual; hereby the cable length must not exceed 20 m). If you control the scan head via an RTC5 board, the adjustment can be realized via configuring the XY2-100 converter's solder jumpers (see RTC5 manual; hereby cable lengths above 25 m are not recommended).
- The data cable should have 25-pin male SUB-D connectors with identical pin-out at both ends. The connection channels (SYNC±, CLOCK±, CHAN1±, CHAN2±, STATUS±, STATUS1±) should be realized as a twisted cable pair, each.
- The data cable must have coaxial copper braided shielding.
- The D-SUB connectors must have fully shielded metal housings.
- The electrical connection of the cable's braided shielding to the D-SUB housing should not be implemented as a wire. Instead, the cable's braided shielding should be coaxially connected to the D-SUB housing via shielded clamps.
- The data cable's controller end must be fitted with a ferrit ring (e.g. Würth WE 742 711 32).

Figure 6 on page 11 shows the data cable layout and pin assignments.

The scan head uses a single connector to provide both the power supply voltages and the data signals. Therefore SCANLAB recommends implementing a cabling solution that allows the use of separate cables for data and power. The data section of such a cabling solution should be designed to accommodate the data cable shown in figure 6.

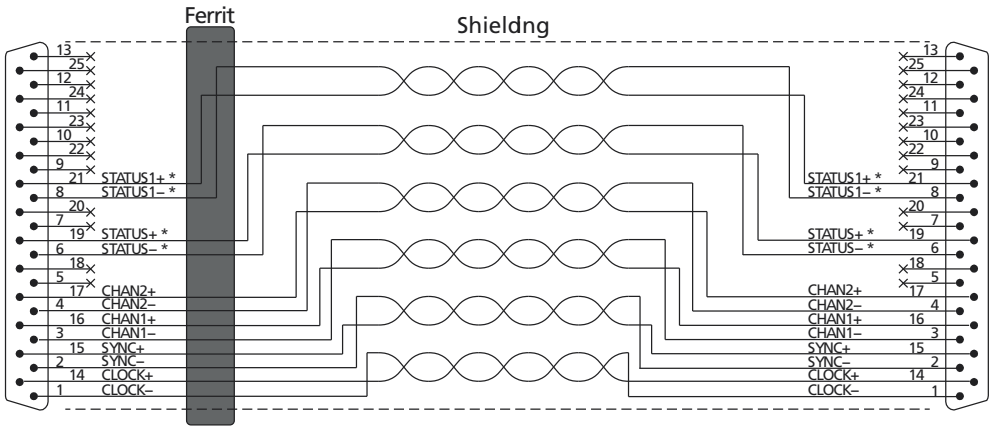

Data cable layout and pin assignments

4.2.2 Connection

- Connect the scan head via the data cable to the customer-specific controller.
- When using an RTC board as the controller, follow the installation instructions in the RTC manual.

4.3 Y Cable (optional)

An Y cable is optional available from SCANLAB to connect the scan head with the power supply and the data transfer. Figure 7 shows the pin-out of the Y cable.

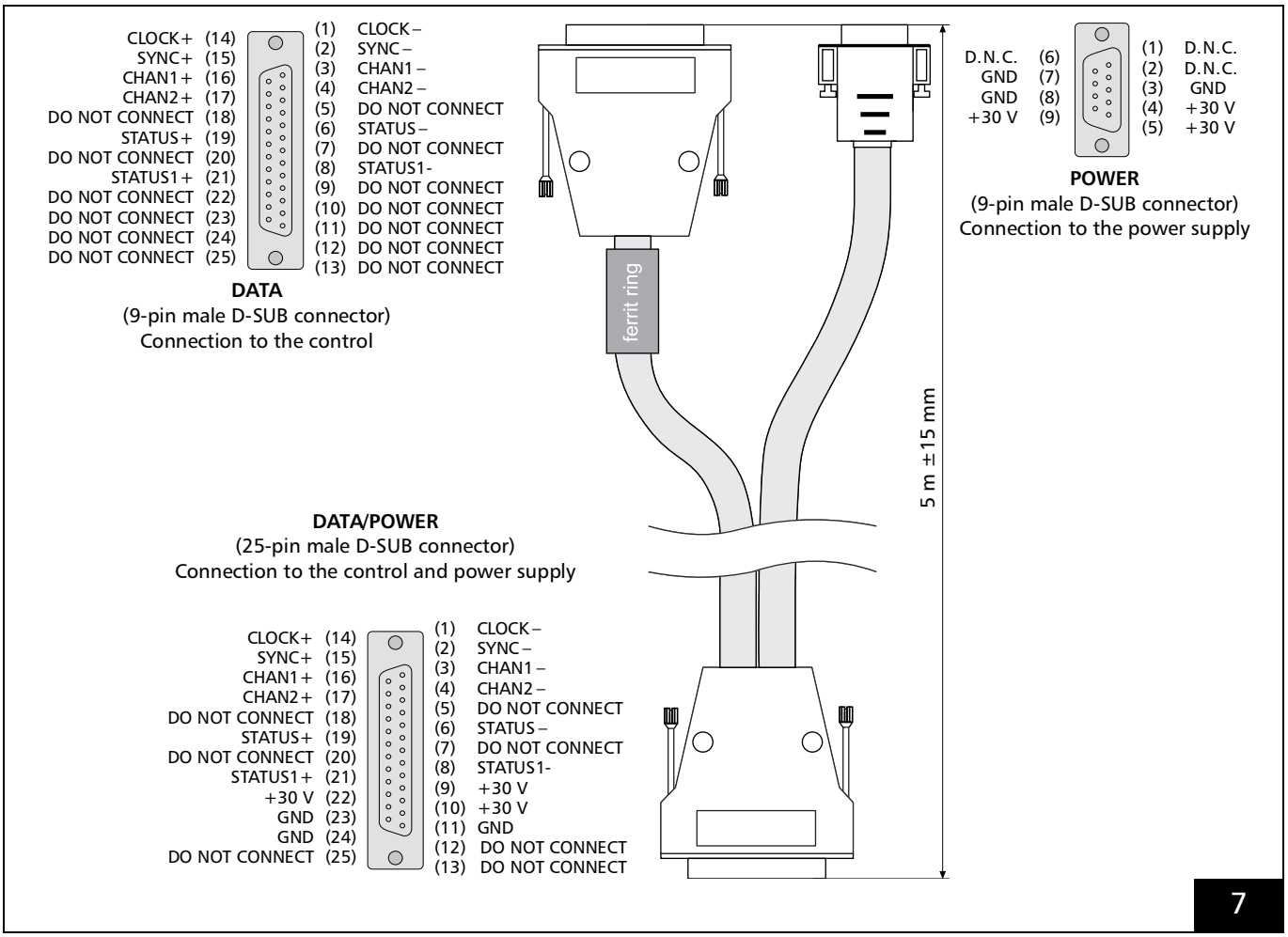

Pin-out of the optional Y cable (SCANLAB #117067)

5 Controlling the Scan System

5.1 Data Transmission

The positions of the galvanometer scanners are controlled via the transmission of digital input signals. The controller and the scan system are interconnected via a serial interface. Data transmission follows the XY2-100 protocol. In the process, essentially the following signals are transferred:

- The controller delivers set values for the scanner positions.
- The scan system generates status signals to be returned to the controller.
- Two additional channels transmit the data transport synchronization signal and a clock signal.

Figure 8 shows the timing of the clock signal (CLOCK), the synchronization signal (SYNC) and the three data channels (CHAN1/CHAN2/CHAN3).

Every 10 µs, three 20-bit words (3 control bits, 16 data bits, 1 parity bit) are transmitted serially as differential signals.

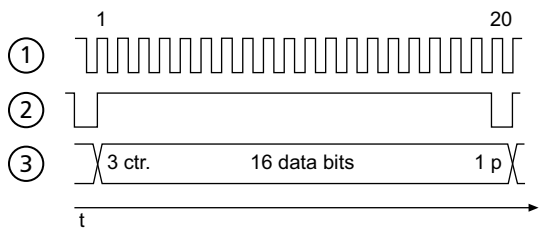

Legend

1 CLOCK
2 SYNC
3 CHAN1/CHAN2/CHAN3

8

Timing diagram of the serial interface signals

5.2 Position Signals, Image Field and X-Y Reference System

Position signals are digitally transferred from the controller to the scan head.

Figure 9 shows the definition of the X-Y reference system which is used for the position signals transmitted to the scan head. The orientation of the axes corresponds to the orientation used by the RTC boards from SCANLAB: The Y axis points in the opposite direction of the entry beam (and the Z axis in the opposite direction of the exit beam). Consequently: Scanner 1 deflects the beam in the Y direction, Scanner 2 in the X direction.

The scan head is calibrated in such a way that for a scan angle of 0.408 rad optically with excursion in the negative axis direction the bit-value "1311" has to be transmitted, for the neutral position (null point) the bit-value "32768, and for a scan angle of 0.384 rad optically with excursion in the positive axis direction the bit-value "64225".

The maximum adjustable scan angle is (1 / 0.96) larger than the calibration angle. The input signal values for the maximum adjustable image field points (see figure 9) are listed in the following table.

Position	X Bit-Value (CHAN2)	Y Bit-Value (CHAN1)
0	32768	32768
1	65535	32768
2	65535	65535
3	32768	65535
4	0	65535
5	0	32768
6	0	0
7	32768	0
8	65535	0

Vignetting can occur at a particular scan angle dependent on the specific scan head and objective. The laser beam is then partially blocked within the scan head or objective, which results in transmission losses. The higher the power loss, the greater is the risk of damage to the scan system. In view of this, the technical specifications on page 18 include not only the calibration angle, but also the maximum allowed scan angle. This is not the same as the maximum adjustable scan angle. To avoid scan system damage, make sure the maximum allowed scan angle is never exceeded.

The maximum allowed scan angle is derived from the geometric and optical data of the employed components. In some cases, particularly with sufficiently small calibration angles, the maximum allowed scan angle can be larger than the maximum adjustable angle. In such cases, the specified maximum allowed scan angle has no practical relevance.

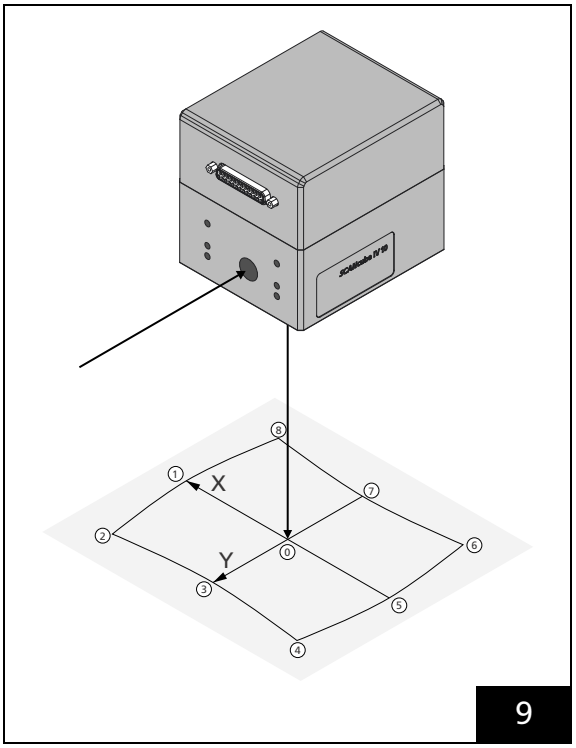

Positions in the image field

Figure 9 also depicts the pillow-barrel-shaped distortion of the square image field and shows the orientation of this distortion with reference to the axes. The field distortion is caused by the beam path within the scan head and by the characteristics of the objective. It must be compensated by the controller.

If you use a SCANLAB RTC control board for controlling the scan head, the field distortion is compensated automatically. Before data values are transferred to the scan head, the values are transformed by the RTC boards with the help of a correction table. A correction table specific for your system is included in the RTC software package or can be ordered from SCANLAB (also refer to the RTC manual). You can use positive and negative coordinate bit-values (−32768 to +32767) of an ideal image field, based on the reference system shown in figure 9, with the origin (zero point) in the center of the image field. The RTC board calculates the corresponding input values and transfers them to the scan head.

The image field size, as well as the working distance A between the input laser beam and the nominal working plane, depend on various factors – among them the focal length of the objective and the aperture of the scan head. The divergence of the input beam also has an influence on the working distance A.

5.3 Monitoring of the Scan System with Integrated Sensors (optional)

This scan system is equipped with a temperature sensor on the servo boards PCB and temperature sensors for the galvanometer scanner 1 and 2. The scan system therefore offers advanced monitoring capabilities based on the evaluation of the sensor signal.

Default thresholds for the error status and for the warning signal have been configured for each sensor. During monitoring, the scan system returns an error status and/or warning message if the threshold values are violated.

Error Status

The error status is linked to the PowerOK bit. If the error status is "not ok", the PowerOK bit is 0. With **set_laser_control()** you can configure the signal suppression so that the laser switches off in this case, see RTC manual.

There are three possible causes for PowerOK = 0:

- The output stage of the galvo control is off (StopEvent ! = 0).
- One or more sensor signals have violated their error thresholds.
- The communication with the scan system is faulty (e. g. cable is not connected).

All monitored signals are combined to a linked error status. If one of the linked signals is "not ok", the error status is "not ok". Conversely, all linked signals must be "ok" so that the error status is also "ok".

For each available sensor signal, there is an upper threshold, above which an error is triggered (see table below).

Warning Signal

The warning signal is linked to the TempOK bit. The TempOK bit can be used for the automatic laser signal suppression.

There are three possible causes for TempOK = 0:

- Temperature warning: Temperature is outside the operating temperature.
- Temperature critical: galvo control switches off (PowerOK = 0).
- One or more sensor signals have violated their warning threshold.

All monitored signals are combined to a linked warning signal. If one of the linked signals is “not ok”, the warning signal is “not ok”. Conversely, all linked signals must be “ok” so that the warnig signal is also “ok”.

For each available sensor signal, there is an upper threshold, above which a warning message is triggered (see table below).

Sensor	Threshold values for warning signal		Threshold values for error status	
	Minimum	Maximum	Minimum	Maximum
Temp. PCB	N/A	75 °C	N/A	80 °C
Temp. Galvanometer scanner 1 and 2	10 °C	57 °C	10 °C	70 °C

5.4 Status Signals

The scan head provides a PWROK status signal (i.e. "Power OK") available via the XY2-100 protocol. If you use an RTC control board, then this status signal can be evaluated via the **get_head_status** or **get_value** commands.

The PWROK signal indicates the status of the power supply. Upon power-up, the PWROK signal is initially 0. After less than one second (when the electronic components have reached a stable operating state) the PWROK signal then switches to 1.

PWROK = 0 signifies a problem in the power supply or a protective action by the electronics. If, upon powering up, the PWROK signal doesn't switch to 1 within a second or if the signal switches from 1 to 0 during operation, then **the laser must be turned off immediately**. Under some circumstances the system could deflect the laser beam in an unintended direction, which may cause health hazards and severe equipment damage. The system should be checked immediately to determine the cause.

Switching of the PWROK status signal from 1 to 0 during operation can be caused, for example, by a defective power supply (also see chapter 4.1 "Power Supply" on page 8).

5.5 Pre-processing tracking error control

The digital control consists of two components:

- Pre-processing
  In comparison to conventional tracking error control, the pre-processing calculates a target trajectory with tracking error from the RTC control values. The duration of the pre-processing is referred to as ControlPreview. The ControlPreview is indicated in the technical specifications (see chapter 6 "SCANcube IV 14 - Technical Specifications" on page 18).
- Control
  The galvanometer scanner control follows this target trajectory with a small trajectory error (actual trajectory).

This type of control has the following advantages:

- Precise tracking errors with significantly reduced specimen scatter (<1%)
- Optional read-back of the status signals PosAck or TrAck

For synchronous control of the scan system and laser, the tracking error and the ControlPreview must be taken into account in the control signals for the laser. This also applies to all other control signals that are to be executed synchronously with the movement of the scan system.

5.5.1 Adjustment of the control for systems with pre-processing tracking error control

General

The actual position is additionally delayed compared to the control values. This means that the times of the laser control signals must also be shifted in relation to the target position specification.

- Shift of the laser control signals = ControlPreview + tracking error

When using a RTC control card, this has no effect on the duration of a job. The switching times of the laser are executed after the position calculation of the job in a buffer memory of the RTC control card. The next job can already be executed.

SCANLAB recommends shifting the switching times of the laser so that the desired proportion of acceleration and deceleration phase is also achieved:

- Shift the switch-on points of the laser forward by approx. 40% to fade in the acceleration phase. Switch-on delay of the laser (laser-on-delay) = 60% * tracking error + ControlPreview
- Shift the switch-off points of the laser back by approx. 20% to fade in the deceleration phase. Switch-off delay of the laser (laser-off delay) = 120% * tracking error + ControlPreview.

The ControlPreview has no influence on the scanner delays.

RTC6 control card

The RTC5 control card offers a function for automatic compensation of the ControlPreview.
This compensation is activated via the **set_control_preview_compensation** command.

After activation, the usual control is carried out in the same way as for systems with conventional tracking control.

RTC5 control card

The RTC5 control card does not offer a function for automatic compensation of the ControlPreview.

There is no compatibility between **set_sky_writing()** and systems with preprocessing tracking error control.

With set_sky_writing_para(), the switching shift of the laser and the sky writing paths must be defined independently of each other. The ControlPreview must be taken into account.

RTC4 control card

The RTC4 control card does not offer a function for automatic compensation of the ControlPreview.

When using a RTC4 control card, it is sufficient to adjust the laser-on and laser-off delays.

Handling with tracking error

The handling of the tracking error is essentially identical to the systems with conventional tracking error control.

These empirical values apply to the scanner delays:

- Jump-Delay: 200% of the tracking error
- Mark-Delay: 100% of the tracking error
- Polygon-Delay: 50% of the tracking error

When comparing the actual position with the target position, ControlPreview and tracking error must also be taken into account.

In systems with conventional tracking error control, the tracking error is a characteristic of the scanning system. Depending on the tuning, the tracking error can vary between different examples of the same scanning system.

For systems with ControlPreview, the tracking error is a characteristic of the pre-processing. The tracking error is identical for all examples of the same scanning system.

6 *SCAN*cube IV 14 - Technical Specifications

(all angle specifications optical)

Scan head ID number	**148094**
Aperture	
Maximum diameter of the laser beam inside the scan head	14 mm
Control	
Input and output signals	XY2-100 Standard
Maximum range for control values[1]	0 to 65535
Calibration	±0.408 rad with (32768 ±31457) bit
Maximum allowed scan angle (vignetting insignificant)	
– without objective	±0.36 rad
Power Supply	
Requirements	30 V DC (29–33 V), max. 3 A each pole
Weight	
Without objective	2.7 kg
Operating and Storage Conditions	
Operating temperature	25 °C ± 10 °C
Storage temperature	−35 °C to +60 °C
Environmental conditions	non-condensing, non-corrosive

(1) This maximum range for input values should be regarded as a theoretical range. Due to the danger of vignetting by the mirrors, the specified maximum scan angle must never be exceeded.

Optical Performance	
Temperature drift	
• Offset	< 20 µrad/K
• Gain	< 20 ppm/K
8-h drift (after 30 min warm-up) (at constant ambient temperature and load)	
- Offset	< 50 µrad/8h
- Gain	< 50 ppm/8h
Tuning Specifications (Dynamic Performance)	
ID number	145451
Type	Vector
ControlPreview	70 µs
Tracking error	< 0.17 ms
Dither (RMS)	< 6 µrad
Typical positioning speed	90 rad/s
Typical positioning speed in the image field	14.4 m/s
Maximum positioning speed	100 rad/s
Typical marking speed (for marking small characters)	2 m/s
Step response for 1% of full scale	< 0.37 ms
Step response for 10% of full scale	< 1.25 ms

Specifications in m/s: with 160 mm objective

Step response: settling to 1/1000 full scale

Mirror

Coating	dielectrical high performance coating
Working wavelength	355 nm
Reflectivity	
• at 355 nm	more than 99.5% per mirror, over the full range of angles
• at 633 nm	more than 50% per mirror
Maximum allowed average laser power	150 W
Maximum allowed laser power density continuous wave	300 W/cm^2
Damage threshold for pulsed operation (at specified wavelength, with pulse length 10 ns, 200 on 1)	0.5 J/cm^2