Installation and Operation

intelli*SCAN* III 10 Module
digital SL2-100, 355 nm

September 11, 2022

SCANLAB GmbH
Siemensstr. 2a
82178 Puchheim
Germany

Tel. +49 (89) 800 746-0
Fax: +49 (89) 800 746-199

www.scanlab.de
info@scanlab.de

© SCANLAB GmbH 2022

SCANLAB reserves the right to change the information in this document without notice.
No part of this manual may be processed, reproduced or distributed in any form (photocopy, print, microfilm or by any other means), electronic or mechanical, for any purpose without the written permission of SCANLAB.

All mentioned trademarks are registered trademarks of their respective companies.

Contents

1 Delivery ... 4
1.1 Package and Unpacking Instructions ... 4
1.2 About this Operating Manual ... 4
1.3 Article Number and I.D. Plate ... 4
1.4 Manufacturer ... 5

2 Safety during Installation and Operation ... 6
2.1 Safety and Warning Symbols used in these Operating Instructions ... 6
2.2 Intended Use ... 6
2.3 Safety during Installation and Start up of the Scan Module ... 7
2.3.1 Steps for Safe Operation ... 7
2.3.2 Safety Procedures that the Customer is Responsible for ... 8
2.3.3 Electrical Safety ... 10
2.4 Electromagnetic Compatibility ... 10
2.5 Conformity to Guidelines ... 10

3 The intelli*SCAN* III 10 Module – Principle of Operation ... 11
3.1 Deflection Mirrors ... 11
3.2 Objective ... 12

4 Installation ... 13
4.1 Preparation of the Scan Module for Mounting ... 13
4.1.1 Mounting the Objective on the Scan Module ... 13
4.2 Scan Module Assembly ... 14
4.2.1 Assembly of the Galvanometer Holder ... 14
4.2.2 Cable Connections ... 17
4.2.3 Installation of the Electronic ... 18
4.3 Electrical Connection ... 21
4.3.1 Power Supply ... 21
4.3.2 Data Transfer ... 22
4.3.3 Data Cable Guidelines ... 23

5 Start up ... 24
5.1 Installation Examination ... 24
5.2 Data Transmission between the Scan Module and the Control ... 24
5.2.1 Returned Data Signals ... 24
5.3 Reference System for the Input Signal ... 28
5.4 Assuring Safe Operating Temperatures ... 29
5.5 Monitoring the Scan Range ... 29

6 Servicing, Maintenance, Repairs and Disposal ... 30
6.1 Servicing ... 30
6.1.1 Regular Cleaning of the Optical Surfaces ... 30
6.2 Disposal ... 30

7 Troubleshooting ... 31

8 Customer Service ... 32

9 Warranty ... 33

10 Technical Specifications – intelli*SCAN* III 10 Module ... 34

1 Delivery

1.1 Package and Unpacking Instructions

> Carefully remove the scan module from the package.

> Keep the packaging, so that in case of repair the scan module can be repackaged properly and sent back to SCANLAB.

Check that all parts have been delivered.

The intelli*SCAN* III 10 Module is designed for a laser with a wavelength of 355 nm, aimed through an aperture of 10 mm (see section 3).

The scan module is designed for digital signal processing via the DSIB-SL digital interface board.

Included in the package are the 10 mm galvanometer holder with two galvanometer scanners and mirrors, two DSCB digital control boards, and an DSIB-SL digital interface board.

1.2 About this Operating Manual

This operating manual is a part of the device. Please keep it available for servicing, maintenance, repairs and disposal. These instructions or a copy thereof should be handed over if this device is disposed of.

SCANLAB reserves the right to update these operating instructions at any time and without any notification.

1.3 Article Number and I.D. Plate

The scan module has the following article number:

135705

The scan module's I.D. plate (see figure 1) with the scan module's serial number is found on the galvanometer holder.

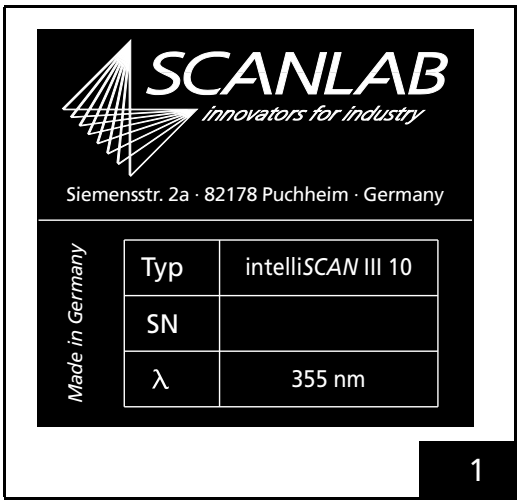

I.D. plate with serial number (SN)

1.4 Manufacturer

SCANLAB GmbH
Siemensstr. 2a
82178 Puchheim
Germany

Tel. +49 (89) 800 746-0
Fax: +49 (89) 800 746-199

www.scanlab.de
info@scanlab.de

2 Safety during Installation and Operation

Please read these operating instructions completely before you begin with the installation and operation of the scan module. If you have any questions regarding the contents or anything is unclear, please contact SCANLAB.

2.1 Safety and Warning Symbols used in these Operating Instructions

The following symbols are used in this manual:

⚠ **Instructions that may affect a persons health are marked with a warning triangle next to the word "Danger".**

⊗ Instructions that recommend appropriate use of this device or warn of damage that may occur to it are identified by a circle with an "X" through it, next to the word "Caution".

2.2 Intended Use

The intelli*SCAN* III 10 Module is an OEM version which is intended for an integration into a system with a proper housing.

The scan module is designed for applications that demand a two dimensional positioning of a laser beam on a working plane. The wavelength of the input rays should correspond to the layout of the scan module. The maximum rating for the input aperture and laser power should not be exceeded. Follow the specifications for the input signal and power supply. If your application requires different specifications, please contact SCANLAB.

For storage, operation and servicing, make sure the following environmental conditions are met:

> The storage temperature for the scan module should be between −35 °C and +60 °C.

> The operating temperature is 25 °C ± 10 °C.

> The environment should not be damp or corrosive.

Install and operate the scan module according to this operating manual.

2.3 Safety during Installation and Start up of the Scan Module

To reduce the risk of injury, please observe the following instructions:

Danger!

- During assembly or operation of the scan module, never stare directly into the laser beam or its deflected radiation. Keep all parts of the body away from the laser beam and its path. For servicing closely follow the procedure in section 6 and observe all safety instructions.
- Adjust the path of the output beam of the scan module by means of a Class 2 laser. If this is not possible, the laser should be operated at the lowest power. Avoid dangerous deflected radiation.
- The danger of damaging deflected radiation can increase when optical instruments are used in combination with the scan module.
- Before checking the scan module make absolutely sure that laser and scan module are turned off.
- Cover the path of the laser beam to block laser radiation.
- Do not obstruct the movement of the mirrors in the scan module in any way. When the scan module is turned on, the mirrors must not be touched at all.
- Follow all applicable laser safety regulations closely.
- Safety regulations may differ from country to country. It is the responsibility of the customer to comply with all local regulations.
- Wear appropriate eye protection at all times.

2.3.1 Steps for Safe Operation

Caution!

- The galvanometer holder and the electronic boards must be securely fastened. Please pay attention to the information given in Chapter 4.2 "Scan Module Assembly", page 14.
- No stress should be applied to the boards and cables.
- Protect the scan module from humidity, dust and corrosive vapours to avoid damage to the mirrors, optics and electronics.
- Touch the optical components only with cotton gloves and special lens cleaning tissues.
- Avoid electromagnetic fields and static electricity. These can damage the electronics of the interface and the amplifier boards. Therefore protect the scan module with an appropriate housing.
- Follow the cleaning instructions of section 6.
- The coating of the mirrors can handle a maximum power density of 300 W/cm^2 continuous wave. Do not exceed this rating.
  For a laser power higher than 100 W contact SCANLAB.

2.3.2 Safety Procedures that the Customer is Responsible for

The scan module is usually operated in conjunction with a laser. Therefore, before installation and operation, all regulations for safe operation of lasers must be known and applied. Since SCANLAB has no influence over the employed laser, the customer is solely responsible for safe operation of the laser together with the scan module.

Danger!

- The operation of the scan module must comply with all applicable safety regulations.
- Safety regulations may differ from country to country. It is the responsibility of the customer to comply with all local regulations.

Shutter

The scan module has no shutter and there is no device to decrease the laser output power. It is the responsibility of the customer to include such a device in the system in a way as to comply with all regulations. The observance of laser safety for the entire assembly of the system must be ensured.

Maintenance

During maintenance of the laser equipment, the class of the laser can increase. Therefore, the customer must take suitable protective measures.

Warning symbols

According to *VBG 93* and *VBG 125* a warning symbol indicating the class of the employed laser must be put up such that the area is marked where the emerging beam is harmful. In addition, a warning symbol must be placed at the emitting aperture of the laser system. The table on page 9 shows the appropriate warning symbols for the various laser classes according to *VBG 93*.

Laser Classes:

Visible Laser Radiation	Invisible Laser Radiation	
LASER CLASS 1	LASER CLASS 1	Class 1: This laser radiation is not harmful.
 LASER RADIATION DO NOT STARE DIRECTLY INTO THE BEAM LASER CLASS 2		Class 2: This laser radiation is in the visible spectrum of 400 to 700 nm. Exposure to this radiation for less than 0.25 s is not harmful to the eyes.
 LASER RADIATION DO NOT STARE DIRECTLY INTO THE BEAM WITH OR WITHOUT OPTICAL INSTRUMENTS LASER CLASS 3A	 INVISIBLE LASER RADIATION DO NOT STARE DIRECTLY INTO THE BEAM WITH OR WITHOUT OPTICAL INSTRUMENTS LASER CLASS 3A	Class 3A: Exposure to this radiation is harmful to the eyes if optical instruments are used to reduce the cross section of the laser beam. If this is not the case and the laser radiation has a wavelength of 400 to 700 nm, exposure for up to 0.25 s is not harmful. For other wavelengths, longtime exposure is also not harmful.
 LASER RADIATION AVOID EXPOSURE TO THE LASER BEAM LASER CLASS 3B	 INVISIBLE LASER RADIATION AVOID EXPOSURE TO THE LASER BEAM LASER CLASS 3B	Class 3B: This laser radiation is harmful to the eyes and in some cases to the skin.
 LASER RADIATION AVOID ANY EXPOSURE OF THE EYES OR THE SKIN TO DIRECT OR SCATTERED RADIATION LASER CLASS 4	 INVISIBLE LASER RADIATION AVOID ANY EXPOSURE OF THE EYES OR THE SKIN TO DIRECT OR SCATTERED RADIATION LASER CLASS 4	Class 4: This laser radiation is very harmful to the eyes and skin. Stray radiation can also be dangerous. This radiation can cause fire or explosion.

When operating the scan module, the following guidelines and standards should be followed:

- EC-Guideline 73/23/EWG
  Low Voltage Guidelines
- EC-Guideline 89/336/EWG
  Electromagnetic Compatibility
  (including changes 92/31/EWG)
- EC-Guideline 89/392/EWG
  Machine Guidelines (including changes 91/368/EWG and 93/44/EWG)
- EN 60825
  Laser Equipment Safety, Part 1 (1994 Edition): Classification of Equipment, Demands and User Guidelines (VDE 0836)
- EN 60204
  Electrical Equipment Part 1:
  General Demands (June 1993)

2.3.3 Electrical Safety

Caution!

- The electronic boards must be securely fastened and protected.

The scan module is powered by low voltage. The power supply of the scan module must meet the following requirements:

If the connectors are covered and cannot be reached without tools from the outside, single separation between mains and low voltage circuit with a test voltage of 2 kV AC is sufficient.

If the connectors can be reached from the outside, double or reinforced isolation between mains and low voltage circuit with a test voltage of 4 kV is necessary.

2.4 Electromagnetic Compatibility

The customer is responsible for the observance of the electromagnetic compatibility, for example by assembling the scan module in an appropriate housing.

2.5 Conformity to Guidelines

The following guidelines have been complied with:

- EC-Guideline 89/392/EWG
- EC-Guideline 73/23/EWG

Please contact SCANLAB for further information about this product and applicable guidelines. For the address see section 8 "Customer Service", page 32.

3 The intelli*SCAN* III 10 Module – Principle of Operation

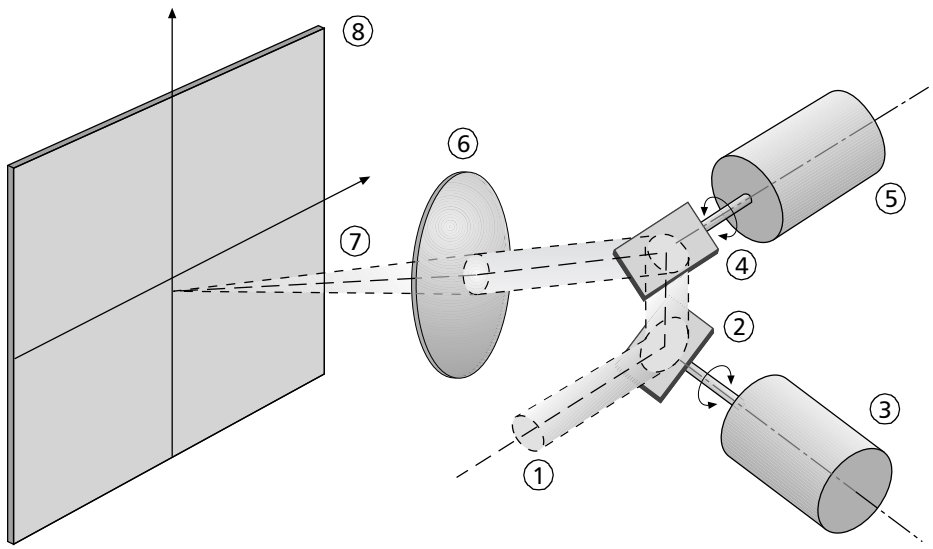

Legend:

1 Beam entrance
2 Mirror 1
3 Galvanometer scanner 1
4 Mirror 2
5 Galvanometer scanner 2
6 F-Theta objective
7 Beam exit
8 Image field

2

The parallel beam of rays is deflected by two galvanometer scanners

The scan module deflects a parallel beam of rays in XY direction. Figure 2 shows the principle of operation. The beam enters the scan module through the input aperture. Once inside, the beam hits mirror 1 on galvanometer scanner 1, then it is deflected by mirror 2 on galvanometer scanner 2. The deflection angle is determined by the adjustable position of the galvanometer scanner. The beam leaves the scan module through the output opening that can carry an F-Theta objective.

The F-Theta objective focuses the parallel beam of rays on the working plane. With the F-Theta objective, the angle of incidence of the beam and the position of the focal point on the image field are directly proportional.

The pillow-barrel-shaped distortion of the square image field is caused by the path of the beam in the scan module and by the objective. This field distortion must be compensated by the control. See section 5.3 "Reference System for the Input Signal", page 28.

The scan module is designed for a parallel beam of rays with a defined maximum diameter that is marked as aperture. A beam within this device should not exceed this diameter.

3.1 Deflection Mirrors

The deflection mirrors are intended for a specific beam diameter, called aperture. This diameter affects the characteristics of the optical image. The way the deflection mirrors are designed for a specific aperture affects the dynamic behaviour of the scan module. The aperture of the deflection mirrors is 10 mm. The use of beams that have a larger diameter inside the scan module might result in damages.

The deflection mirrors have a dielectrical high performance coating: The coating is designed for a defined wavelength.

- The mirrors are designed for a wavelength of 355 nm.
- At a wavelength of 355 nm, the maximum laser power density of 300 W/cm^2

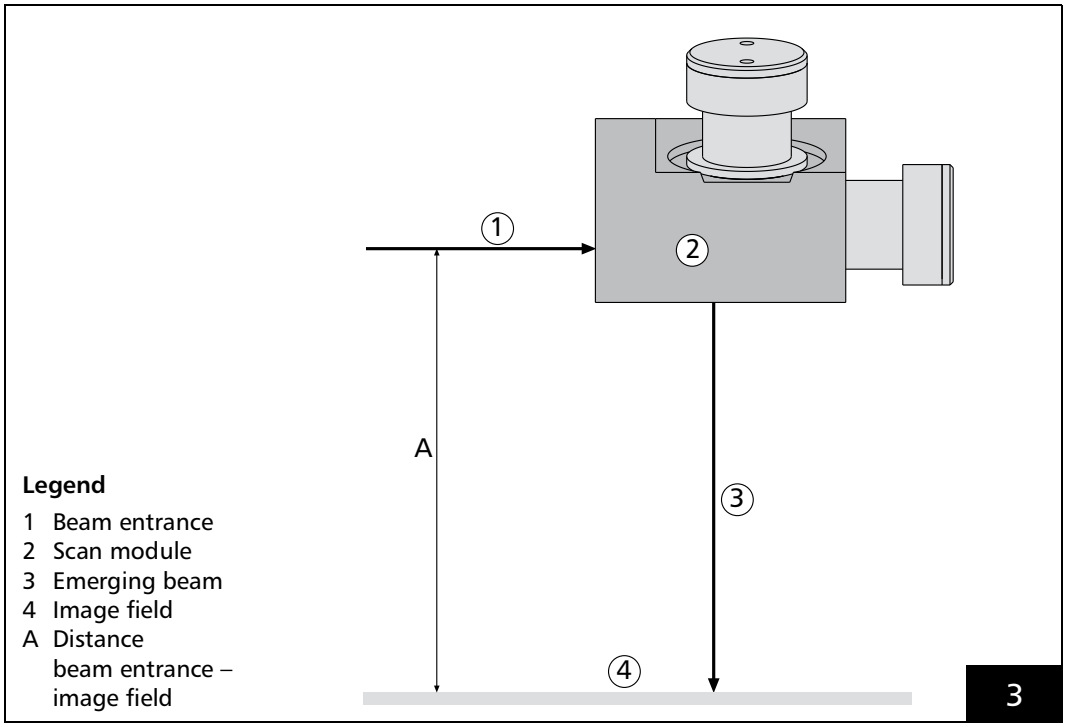

Distance A between beam entrance and image field

continuous wave may not be exceeded.

- If you wish to use a laser with a power higher than 100 W, please contact SCANLAB.
- The mirror reflectivity using a wavelength of 355 nm is more than 99.5% over the whole range of angles.

> Make sure the aperture and the coating of the deflection mirrors meet the requirements of your application. For tolerances and deviations, please contact SCANLAB.

3.2 Objective

The objective has to have the matching focal length and be set up for the used wavelength. The distance A between the laser input and the image field (figure 3) and the size of the image field depend on various factors, e.g. the focal length of the objective and the aperture of the scan module. Furthermore, the distance A depends on the divergence of the input beam.

Due to the mechanical dimensions of the mirrors in the scan module, some vignetting of the beam can occur, if the scan angle exceeds a certain value. That means, a part of the beam can not any more be lead by the mirrors. This part of the beam is absorbed by the scan module resulting in a loss of power. Furthermore the interior of the scan module might be damaged due to the absorption of laser radiation.

Using a gaussian beam profile, the vignetting of the laser beam is insignificant, if the scan angle of each mirror does not exceed the size of the "maximum scan angle"
defined in chapter 10 "Technical Specifications intelli*SCAN* III 10 Module".

Caution!

- Using scan angles exceeding the size of the maximum scan angle indicated in chapter 10, some vignetting inside the scan module can occur and the interior of the scan module might be damaged.
  If your application requires other scan angles, please contact SCANLAB.

4 Installation

Danger!

- Make sure all components of the system (laser, control, voltage supply, computer) are switched off before installation.
- During installation of the scan module, never stare directly into the laser beam or in any of its deflected radiation.
- Never hold parts of the body into the direct path of the laser or its deflected radiation.
- After the scan module has been mounted there is a cone-shaped dangerous laser output area. Do not stare into the laser or its deflected radiation. Keep all parts of the body away from the laser beam.

Caution!

- Protect the scan module and the objective from any kind of dirt.
- Follow the operating and storage instructions. See section 2.2 "Intended Use", page 6.
- Follow each step for mounting and electrical connection in the correct order as outlined in this operating manual.

4.1 Preparation of the Scan Module for Mounting

Caution!

- Never touch the optical surfaces of the deflection mirrors or of the objective.
- Carefully take the scan module out of the packaging.
- The objective is very sensitive and can be damaged by mechanical stress.
- Never place the scan module on top of the objective.

4.1.1 Mounting the Objective on the Scan Module

If the objective is not mounted on the galvanometer holder by the manufacturer, then an objective holder is mounted

Caution!

- Do not touch the optical surface of the objective.
- Before mounting the objective make sure that a combination of the objective and the objective holder is possible. Otherwise damage to the objective and the mirrors in the scan module can occur.
  If anything is unclear, please contact SCANLAB.
- The orientation of the objective holder must be identical with the orientation adjusted by SCANLAB.
- Use only the original objective holder from SCANLAB. Otherwise you risk damages of the mirrors inside the scan module.

To mount the objective, follow these instructions:

> Carefully remove the protective covering of the beam output on the scan module (e.g. with a small screwdriver).

> Check the objective for scratches, flaws and particles of dirt. If necessary clean it according to section 6.1.1 "Regular Cleaning of the Optical Surfaces", page 30.

> Lubricate the thread on the objective with vacuum grease.

> Screw the objective onto the scan module and carefully tighten it by hand.

Caution!

- Do not change the position of the galvanometer scanners in the galvanometer holder adjusted by SCANLAB.
- Never open the screws of the galvanometer scanners.
- Use only the bore holes shown in figures 4 and 5. Other holes can not be used for fastening the galvanometer holder or for any other purposes.

4.2 Scan Module Assembly

To install the scan module, the galvanometer holder with the galvanometer scanners and the electronic boards have to be mounted.

4.2.1 Assembly of the Galvanometer Holder

The illustrations for this section are found on page 15 and 16.

Figure 4 shows the galvanometer holder with the two galvanometer scanners, the mounting assembly and dimensions. Alignment pins and screws are not included in the package. Figure 5 depicts the position of the laser input at the input side of the galvanometer holder. The laser beam axis must be identical with the laser input axis of the galvanometer holder. The installation of the galvanometer holder has to be performed with the indicated alignment pins and screws – see figure 4.

Figure 5 also shows a bottom view of the galvanometer holder with the beam displacement of the laser input axis and the middle of the objective or the emerging beam. The deflecting mirrors are in a neutral position. Mount the galvanometer holder in the following manner:

> Carefully remove the protective covering of the laser input on the mounting bracket. (e.g. with a small screwdriver).

> Fix the alignment with two alignment pins 4_{h6} in the fitting holes.

> Fasten the galvanometer holder with four screws having M6 threads.

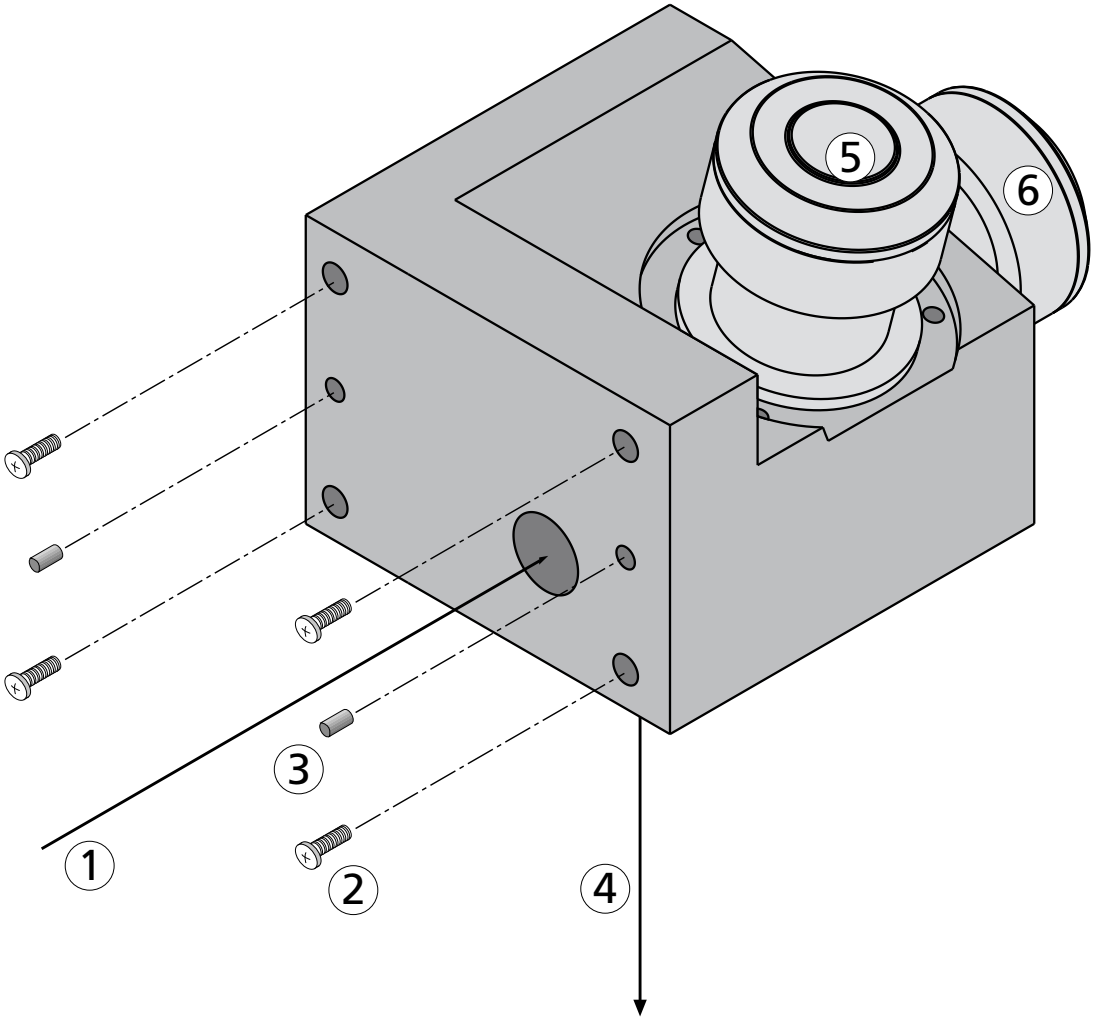

Legend

1 Beam in
2 Screws (M6 thread)
3 Alignment pins (4_{h6})
4 Emerging beam
5 Galvanometer scanner 1
6 Galvanometer scanner 2

4

Galvanometer holder with galvanometer scanners and mounting assembly

Bottom view with beam exit and beam displacement (12.56 mm)

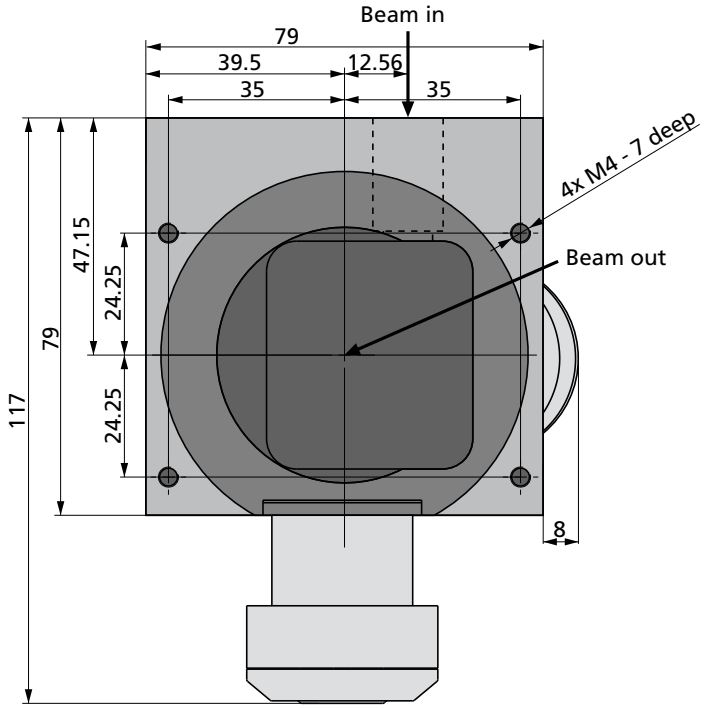

Side view of the galvanometer mount with mounting holes and beam entrance

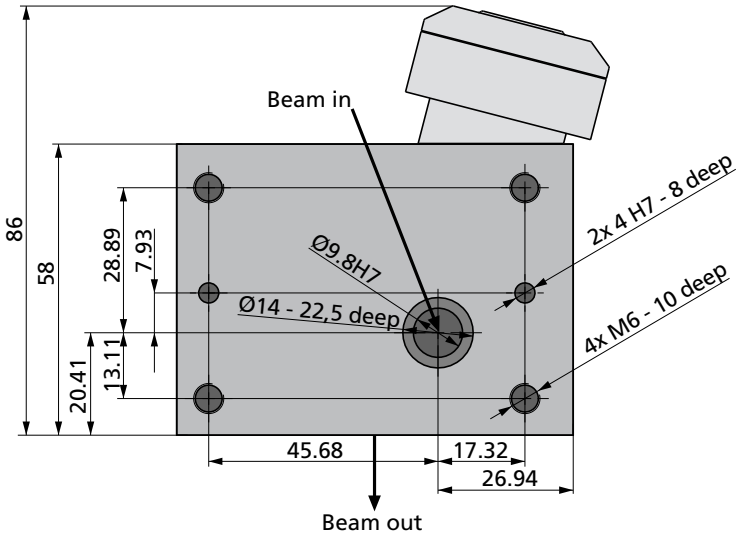

4.2.2 Cable Connections

To ensure correct data transfer between the control and the scan module and correct power supply, please note the following:

> Each galvanometer scanner belongs to one of the two DSCB digital control boards. The DSCB and the scanners are labelled with "Galvo1" or "Galvo2". The labels of the DSCB are located at the angle plate of the DSCB. Please connect the corresponding units.

> Connect the DIGITAL & POWER IN and the POWER IN connectors of the two DSCB boards via the four delivered cables to the corresponding DIGITAL & POWER OUT and POWER OUT connectors of the DSIB-SL board.

> Optionally a DA40 adapter board is part of the delivery. The DA40 adapter board provides a 3-pin D-Sub connector for power supply and a 9-pin connector for data transfer. Connect this board to the DSIB-SL board's SL2-100 and POWER IN connectors.

> Connect the PC controller with RTC5 board via an appropriate data cable to the DSIB-SL board's or the DA40 adapter board's SL2-100 connector.

> Connect the power supply to the DSIB-SL board's or the DA40 adapter board's POWER IN connector.

Figure 6 shows the arrangement of the boards.

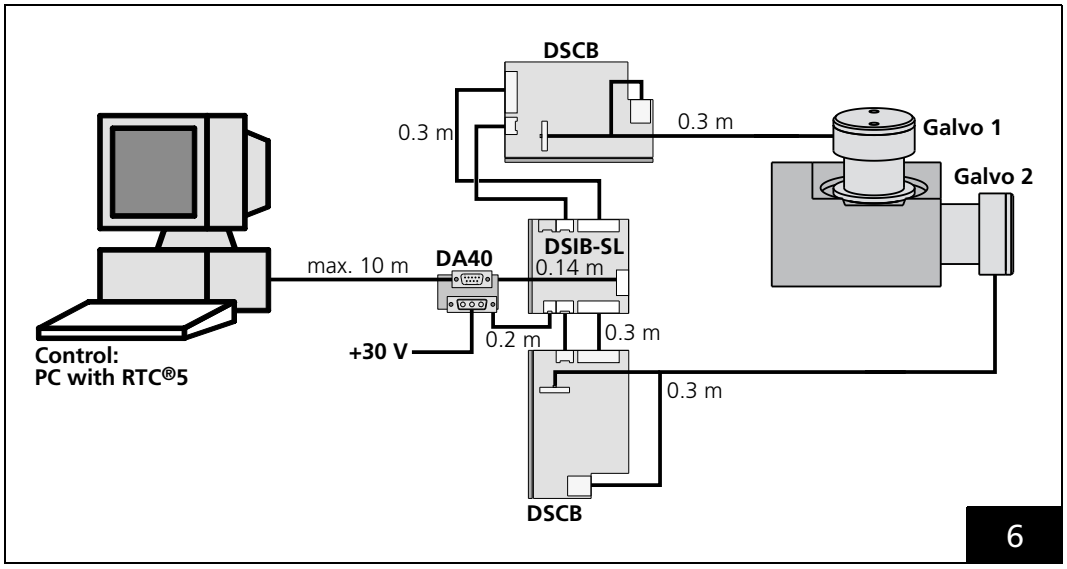

Arrangement of the boards and cable connection

4.2.3 Installation of the Electronic

Caution!

- The tuning of the electronic boards must not be changed.
- To avoid damages on the electronic boards caused by electrostatic effects, please observe the ESD regulations.
- Protect the boards from humidity, dust, corrosive vapours, stress and mechanical damage.
- No stress should be applied to the boards and cables.
- Use only the original cables.
- For the assembly of the electronic boards use only the bore holes shown in figure 7 and 8. Other holes can not be used for fastening the boards or for any other purposes.

Boards

Figures 7 and 8 on the following pages show the dimensions of the electronic boards.

The DSCB digital control boards have to be fastened at the two holes in the angle plate shown in figure 7. Screws with M3 thread have to be used.

To make sure the temperature of the board does not rise too high, it is important to fix the angle plate on a heat sink or an appropriate-sized part of a housing. The material and the dimension of the heat sink must be chosen such that the temperature of the DSCB board's angle plate does not exceed 50 °C.

For fastening the DSIB-SL board, the board provides four holes in the angle plate (see figure 8 on page 20). Two of the four holes are M3-threaded. For all holes screws with M3 thread must be used.

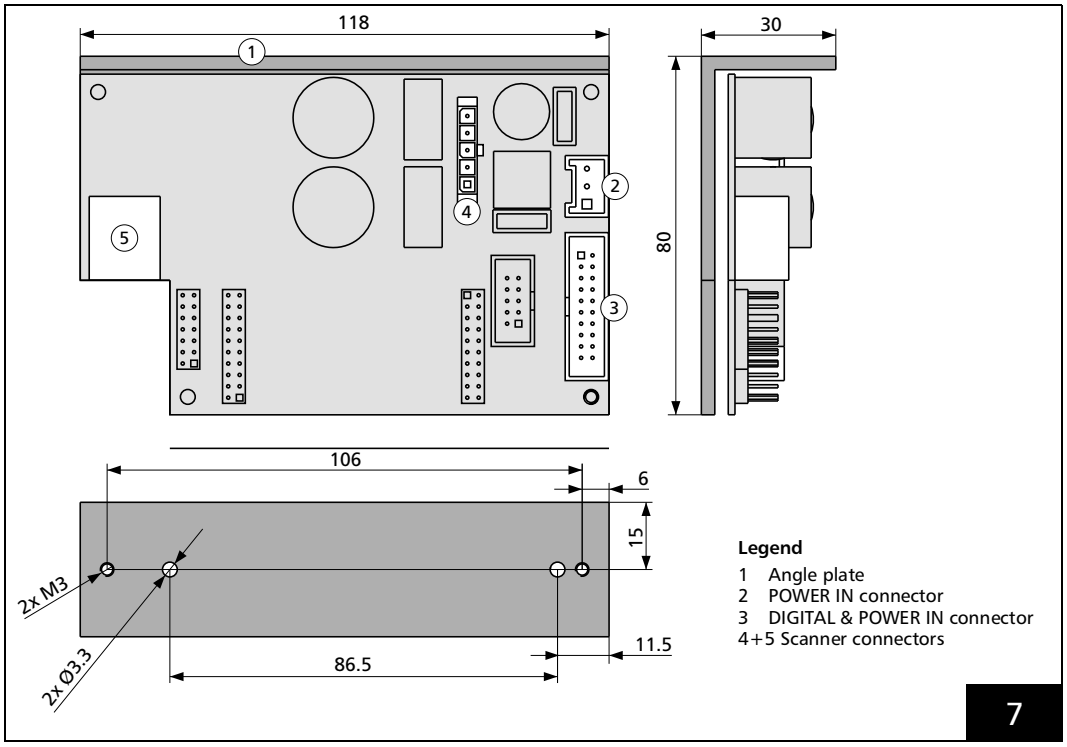

Dimensions of the DSCB digital control board

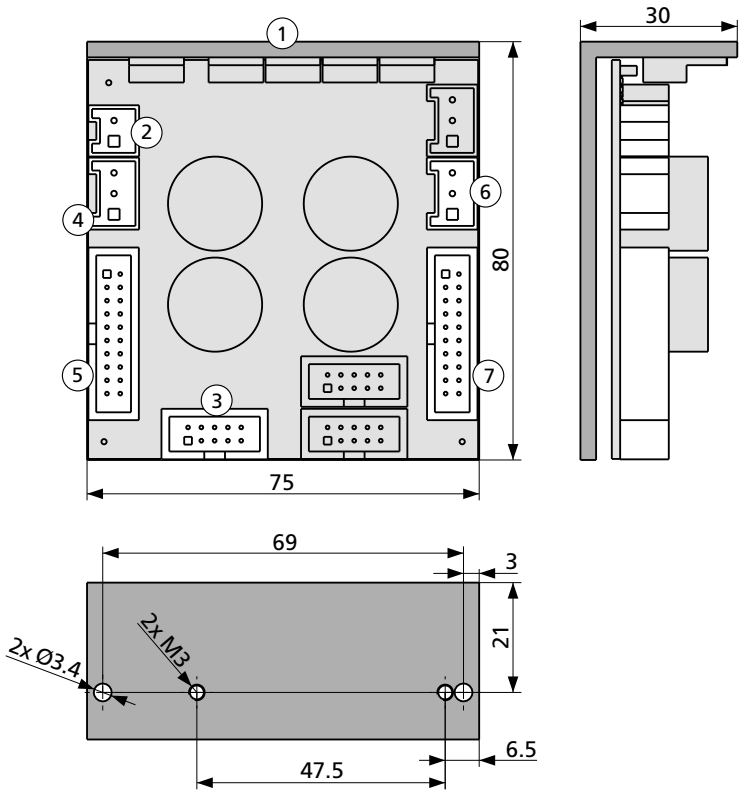

Legend

1 Angle plate
2 POWER IN connector
3 SL2-100 connector for connecting the PC controller
4 POWER OUT connector for axis 2 (X)
5 DIGITAL & POWER OUT connector for axis 2 (X)
6 POWER OUT connector for axis 1 (Y)
7 DIGITAL & POWER OUT connector for axis 1 (Y)

8

Dimensions of the DSIB-SL digital interface board

4.3 Electrical Connection

Caution!

- When wiring the scan module, make sure none of the wires carry any voltage. All control devices must be turned off.
- Turn off the power supply before disconnecting the power or the data cable.
- Follow all electrical specifications exactly.

4.3.1 Power Supply

For connecting the power supply to the scan module the DSIB-SL board provides a 2-pin POWER IN connector. Its pin-out is shown in figure 9.

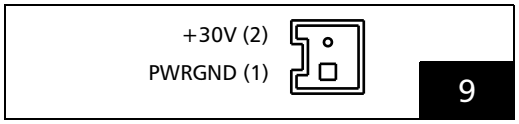

Pin out of DSIB-SL board's POWER IN

Optionally the scan module is supplied with a DA40 adapter board. This adapter board provides a 3-pin D-SUB connector for power connection. Figure 10 shows its pin out.

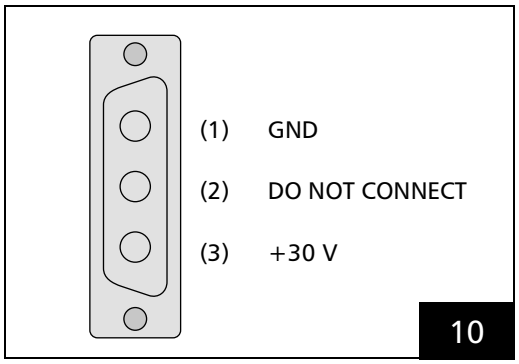

Pin-out of the optional adapter board's POWER IN connector

The scan module requires a power supply of 30 V DC (29-33 V) or alternatively a balance source of ±(15+1.5) V DC and a maximum current of 3 A. The residual ripple of the power source should not exceed 100 mV_{pp}.

The power supply is galvanically isolated from the SL2-100 interface. In addition the scan module provides reverse-polarity protection and start-up current limiting.

Moreover, the scan module's electronics monitors the supply voltages. If, during operation, the supply voltage falls below a minimum of approx. 25 V (e.g. due to excessively long or thin cables, a weak power supply or high loads), then the electronics disconnects the scan module from the power supply. If the supply voltage has returned (within a short time) to permissible levels, the scan module is restarted.

If the external supply voltage fails to return to permissible levels, the scan module will then remain disconnected from the power supply. The supply voltage problem must be resolved and the scan module switched off and then restarted.

> Check the polarity of the power source.

> Connect the power source.

The scan module can be powered via one 30 V power supply or via two ±15 V power supplies (see figure 11). In general, power supplies are not included in the package, but suitable power supplies are available from SCANLAB.

SCANLAB recommends to connect the scan module's GND connection (or the corresponding connection of the power supply's output side) to the mains's grounding wire (PE). The scanners' housings are internally connected to the scan module's GND connector. Also see figure 11.

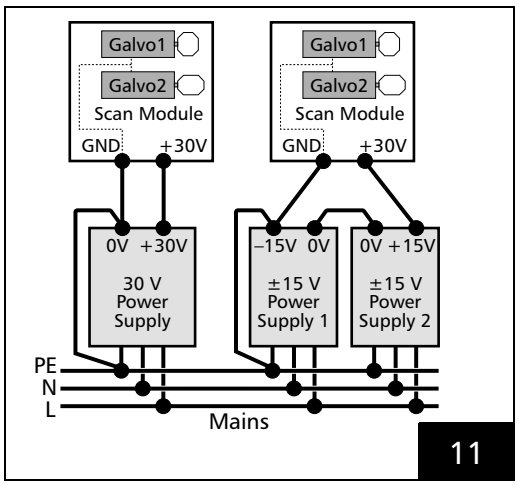

Connect the scan module's GND connection (or the corresponding connection of the

.

Caution!

- Do not connect any voltage to the housings of the galvanometer scanners. Especially ensure, that there is no electrical contact between the scanner housings and +30 V or +15 V. Otherwise the scanners and the electronics can be damaged.

4.3.2 Data Transfer

For connecting the scan module to an RTC5 board for serial data transfer, the SL2-100 connector of the DSIB-SL board is used. Figure 12 shows the pin-out of this connector.

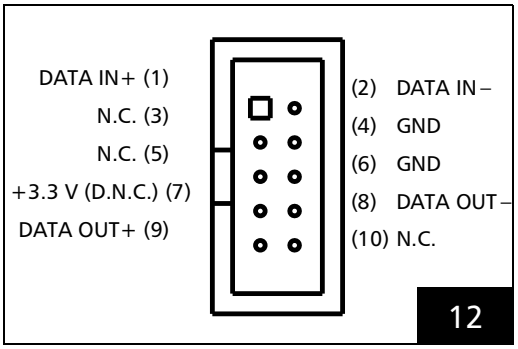

Pin-out of the DSIB-SL board's SL2-100

Alternatively, the optional adapter board's 9-pin D-SUB connector can be used for digital data transfer. Figure 13 shows its pin out.

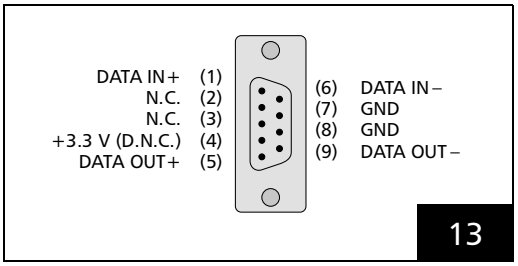

Pin configuration of the optional adapter board's SL2-100 connector

A description of the input and output signals can be found in sections 5.2 "Data Transmission between the Scan Module and the Control" and 5.3 "Reference System for the Input Signal", page 28.

4.3.3 Data Cable Guidelines

Signal transfer between scan module and controller is realized via a data cable. This data cable is connected to SL2-100 connector.

The differential DATA IN input channel receives the control values from the controller. The differential DATA OUT output channel returns the status signals to the controller. The 3.3 V voltage is supplied for SCANLAB's POF converter for optical data transmission (POF = Polymer Optical Fiber) – also see below. This voltage should not be used for other purposes.

Appropriate data cables, for either electrical transmission or optical fiber transmission, are obtainable from SCANLAB. The optical fiber, too, is attached via a 9-pin D-SUB connector. Optical conversion (POF conversion) for optical data transmission takes place in the D-SUB connector. The operating voltage for POF conversion is supplied at the SL2-100 connector and the RTC5 board's scan head connectors.

Data cables are generally not included in the package. SCANLAB recommends the following design (for electrical data transmission):

- The cable should be fitted with 9-pin male D-SUB connectors at both ends. The two channels DATA IN± and DATA OUT± (4 wires) must consist of twisted cable pairs and be cross-connected at both D-SUB connectors (e.g. so that the RTC5 board's DATA OUT signal flows to the scan system's DATA IN input). The cable length should not exceed 25 m. SCANLAB recommends a cable impedance of 110 W, independent from the cable length.
- The data cable must have coaxial copper braided shielding.
- The D-SUB connectors must have fully shielded metal housings.
- The electrical connection of the cable's braided shielding to the D-SUB housing should not be implemented as a wire. Instead, the cable's braided shielding should be coaxially connected to the D-SUB housing via shielded clamps.
- The data cable's controller end must be fitted with a ferrit ring (e.g. Würth WE 742 711 32).

Figure 14 shows the data cable layout and pin assignments.

- Connect the scan module via the data cable to the customer-specific controller.
- If an RTC board is used as the controller, then follow the installation instructions in the RTC manual.

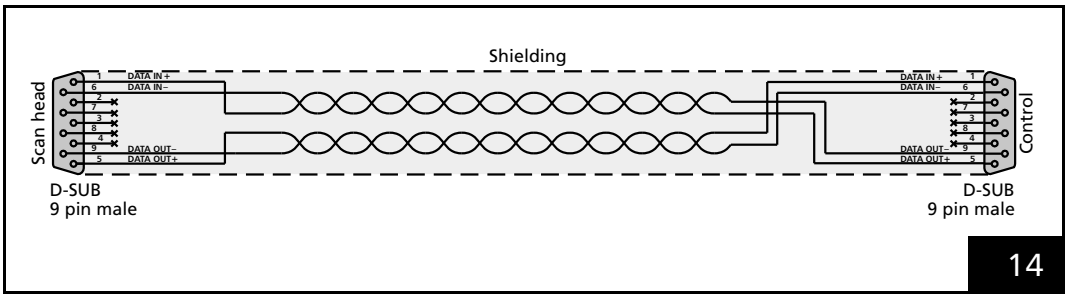

Data cable layout and pin assignments

5 Start up

Danger!

- Do not stare directly into the laser beam or in any of its deflected radiation. Keep all parts of the body away from direct contact with the laser beam or any of its deflected radiation.
- Use a Class 1 laser to adjust the path of the beam. If this is not possible the laser should be operated at its lowest power. Avoid dangerous deflected radiation.

5.1 Installation Examination

Before operating the scan module, please check the following:

> Does the scan module have the proper objective and mirrors? Do the requirements of the application comply with the technical data?

> Are all components clean and free of dust?

> If necessary, clean the optical components as described in the section 6.1.1 "Regular Cleaning of the Optical Surfaces", page 30.

> Are the mechanical installation and electrical connections exactly as described in section 4?

5.2 Data Transmission between the Scan Module and the Control

The controller and the scan module are interconnected via a serial interface for digital data transfer. Data transmission follows the SL2-100 protocol. In the process, essentially the following signals are transferred:

- The controller delivers position values, i.e. (20-bit) set values for the X and Y axes.
- The scan module generates a status signal to be returned to the controller.

The scan module can be operated via a SCANLAB RTC5 control board (RTC5 PC interface board or RTC5 PC/104-*Plus* board) but not via an older RTC board as an RTC3, RTC4 or RTC *SCAN*alone.

5.2.1 Returned Data Signals

The scan module's digital servo architecture allows a wide variety of data signals to be returned to the control board. Via the return channel (DATA OUT±), data are transmitted to the controller board every 10 µs simultaneously for both axes (in compliance with the SL2-100 protocol). This opens up possibilities such as monitoring the galvanometer scanners' actual values during execution of an application or carrying out comprehensive troubleshooting in case of operational malfunction.

The scan module returns the following signals to the control board every 10 µs:

- a 20-bit status word:
  When the scan module is operated via an RTC5 control board, the command **control_command** can be used for selecting which data the scan module should return to the control board via the 20-bit status word. The selected data

sources will be transmitted until another source is selected. By default, after every reboot or reset, the XY2-100 status word (see below) is returned via the 20-bit status word.

- 6 additional status bits:
  Via these status bits, the scan module returns to the control board (independently on the selection via **control_command**) the PWROK, TempOK and PosAck status informations of the XY2-100 status word (see below).

Data received by the RTC5 board can be synchronously or asynchronously read at any time via **get_head_status**, **get_value** or additional commands (see the RTC5 manual).

XY2-100 Status Word

By default, starting from five seconds after every reboot or reset, the XY2-100 status word is returned via the 20-bit status word. The status word contains three status values, which are also returned (continuously and independently on the selection via control_command) via the six additional status bits:

- PWROK (i.e. "Power OK")
  PWROK = 0 signifies a problem in the power supply. In normal operation, the PWROK signal is 1. If the signal switches from 1 to 0 during operation, then **the laser must be turned off immediately**. Under some circumstances the system could deflect the laser beam in an unintended direction, which may cause health hazards and severe equipment damage. The system should be checked immediately to determine the cause (also see section "Power Supply", page 21).
- TempOK (i.e. "Temperature OK")
  The TEMPOK signal always switches from 0 to 1 when the operating temperature has been reached (which might take a few minutes). If, during operation, the galvo temperature drops below its minimum operating temperature or exceeds a maximum allowable temperature, the TEMPOK signal will switch to 0. In this case, system operation does not need to be stopped immediately, but large drift or other side-effects may occur.
  If system operation is not stopped and the scanner temperatures then reach a still higher critical value, then the built-in temperature control mechanism will switch off the galvanometer scanner drive stages to avoid heat-induced damage to the scanners or the module (see page 29). If the scanner temperature drops again below the power-down threshold, the scanner drive stages are automatically restarted.
- PosAck (i.e. "Position Acknowledge")
  PosAck = 1 signifies that the difference between the set value and the real position is less than 0.28% of the image field size. The PosAck signal normally switches to 1 within a few seconds after power-up. The PosAck signals of the X and Y axis are logically AND-connected and returned as common signal.

Additional Data Types

When the scan module is operated via an RTC5 board, the command *control_command* (see the RTC5 manual) can be used for selecting which data the scan module should return to the control board. Unless the configuration is changed after reset, the XY2-100 status word will be transferred (see the previous section). The selected data is transmitted at 10 µs intervals until a different data type is requested.

The following is a description of the data types that may be selected. The data can and must be separately evaluated for each axis.

XY2-100 Status word

See the previous section.

Actual Position

Actual angular position of the corresponding axis

Set Position

Set angular position of the corresponding axis

Position Error

Set angular position - Actual angular position
(difference between the current actual angular position and the current set angular position of the corresponding axis)

Actual Current

Actual galvo output stage current of the corresponding axis

Relative Galvo Control

Galvo control voltage (in per mille of the maximum value)

Actual Velocity

Actual angular velocity of the corresponding axis

Operational Status

The scan module provides various blocks of extended status informations.

If the first block is selected to be returned to the control board, then the scan module provides the following information about the current operating state:

- Status of galvo output stage (on/off)
- Status of galvo heater output stage (on/off)
- Status of internal voltages (all voltages o.k. or at least one internal voltage not o.k.)
- Status of external voltage (o.k. or power supply interruption)
- Status of AD converter (successfully initialized or not initialized)
- Status of booting process (complete or not yet completed)
- Status of control parameters (valid or invalid).
- Boot signal: The control is activated, as soon as all necessary flags are set
- Status of positioning (positioning error within the allowed range (< 0.28%) or not in the allowed range)
- Status of positioning (positioning within the allowed range or critical position reached)
- Temperature Status (operating temperatures of galvanometer scanners and servo boards reached or not yet reached)
- Temperature Status (temperature of galvanometer scanner and servo board below a critical value or at least one of the two temperatures above the critical value): If one of the two temperatures exceeds the critical value, then the scan module automatically enters a temporary temperature error state: the output stages of the affected axis are (temporarily) deactivated. The scan module resumes normal operation, as soon as the temperature drops below the maximum allowed value.
- Error Status (no critical error or system presently in critical error state). Critical errors are for instance improper internal voltages, external power supply interruption or reaching a critical edge position
  If a critical error occurs, the scan module automatically enters a permanent error state, in which the output stages of the affected axis remain deactivated – even if the critical error was only temporarily present. Normal operation is *not* resumed.

Note:
During both temporary and permanent error states, the scan module will continue to transmit data to the control board. Even in these states, switching or selection of data signals for diagnostic purposes is still possible.

The second information block can be selected to be returned to the control board if more detailed information about the current operation state is desired. This block separately indicates potential error states of the various internal voltages and of the galvanometer scanner and servo board temperature.

Alternatively, two further information blocks can be selected to be returned to the control board: They indicate the operation states listed above at the moment of the most recently occurred operation interruption. After every successful restart – and, as long as no error has occured – all status informations of these two blocks are irrelevant. Only, as soon as an error causes a switch into a temporary or permanent error state, the current status values will be saved into these blocks. Simultaneously, also an event code is set, indicating which particular event caused the error state. This event code can be read out separately.

Temperature

For each axis, the following temperatures can be returned to the control board:

- Temperature of the corresponding galvanometer scanner
- Temperature of the corresponding servo board

Internal Voltages

For each axis, the following internal voltages can be returned to the control board:

- AGC (automatic gain control) voltage:
  supply voltage of the corresponding position detector
- DSP core supply voltage (1.8 V)
- DSP IO voltage (3.3 V)
- Analog section voltage (9 V)
- AD converter supply voltage (5 V)

Exact values for the internal voltages can vary for different versions of the scan module.

Heating Output of the Galvo Heaters

Relative heating output (0 to 1000 per mille) of the corresponding galvanometer scanner's heater.

General Scan Module Information

Alternatively, the following data types may be selected at both axes:

- Serial number
- Article number
- Firmware version number
- Calibration
- Aperture
- Wavelength
- Running time

5.3 Reference System for the Input Signal

The excursion of the laser beam in X and Y axis direction is determined by input signals. The definition of the axes is shown in figure 14. The module is calibrated in such a way that for the maximum excursion in a negative axis direction it transmits a value of "–524.288" for the neutral position a value of "0" and for maximum excursion in a positive axis direction, a value of "+524.287".

The following table shows the values of the input signal for defined positions in the image field.

Position	X-Value	Y-Value
0	0	0
1	+524.287	0
2	+524.287	+524.287
3	0	+524.287
4	–524.288	+524.287
5	–524.288	0
6	–524.288	–524.288
7	0	–524.288
8	+524.287	–524.288

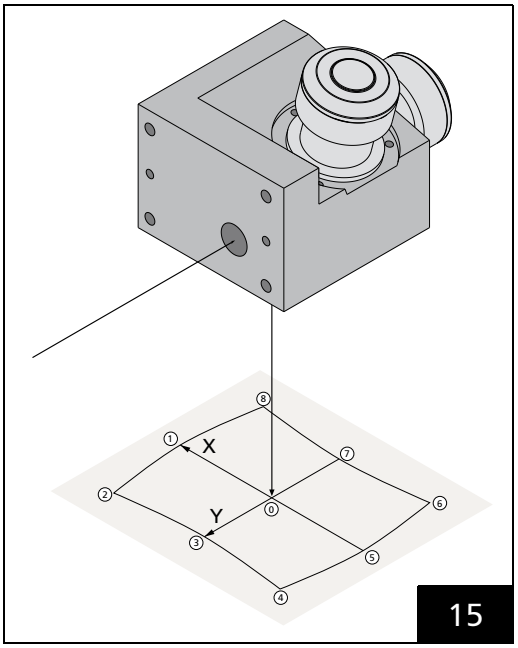

Positions in the image field

There is a pillow-barrel-shaped distortion of the square image field which is caused by the path of the beam in the scan module and by the objective. Figure 15 shows the orientation of the field distortion to the axes. The field distortion has to be compensated by the control.

5.4 Assuring Safe Operating Temperatures

If the scanners are driven for long periods of time at high positioning speeds or if the application includes a high rate of vector changes, the correspondingly high current consumption of the galvanometer scanners can lead to excessive temperatures – especially in the case of insufficient cooling, for instance due to a weak thermal link to the machine.

To prevent damage to the scanners, the intelli*SCAN* III 10 Module provides a two-stage temperature control mechanism.

To prevent damage to the scanners, the intelli*SCAN* III 10 Module provides a two-stage temperature control mechanism.

Caution!

- The user must ensure that the application program evaluates the temperature control signals correctly, as described below.

Stage 1: Temperature Status Warning

The temperature status signal TempOK indicates that the scanner is operating at a safe temperature level. During normal operation, the signal is 1.
If the scanner temperature rises above a certain value or drops below a minimum value, then the TempOK signal switches to 0. If the TEMPOK signal switches to 0 during operation, system operation should be stopped and the system should be checked to determine the cause. If system operation is not stopped, large drift or other side-effects may occur.

Stage 2: Critical Temperature Shutdown

In addition to the temperature status warning, the following scanner protective function is implemented:

If a scanner's temperature rises above the critical value for temperature status warning and reaches a second, still higher critical value, then the scanner's output stage is turned off to prevent damage to the scanner. In this situation, the scanner's position is stationary and no longer under programmatic control.

If the scanner's temperature drops again below the power-down threshold, the scanner's drive stage is automatically restarted and the scan module will resume normal operation.

Caution!

- If the PowerOK signal switches to 0, laser power must be switched off immediately. Otherwise, health hazards and severe equipment damage can occur due to uncontrolled laser radiation.

5.5 Monitoring the Scan Range

The scan module has a built-in monitoring function to prevent damage to its galvanometer scanners or electronics when a problem occurs.

If a galvanometer scanner's scan angle exceeds the allowed range due to an operational disturbance, its output stage will be shut down. In such situations, the galvanometer scanner can no longer be controlled.

Danger!

- If an output stage is shut down due to a scan range overrun, laser power must be switched off immediately. Otherwise, health hazards and severe equipment damage can occur due to uncontrolled laser radiation.

6 Servicing, Maintenance, Repairs and Disposal

6.1 Servicing

The scan module does not have any parts that can be serviced by the user. All servicing and repairs should be performed by SCANLAB. Only SCANLAB has the proper test standards and routines to calibrate the system optimally.

Danger!

- Do not stare directly into the laser beam or its deflected radiation during servicing or maintenance and keep all parts of the body away.

6.1.1 Regular Cleaning of the Optical Surfaces

Dirty objectives and mirrors increase the absorption of laser power on the optical surfaces. The dirt can burn into the surface and disturb the optical elements. The warranty does not cover any damage due to improper use, cleaning or handling.

> Regularly check all objectives and mirrors. In case dirt is found, clean the optical surfaces as follows:

> Carefully hold the optical element by its edges with cotton gloves and place its optical surface up on a clean work surface.

> Blow clean compressed air on the surface to remove dust and dirt particles.

> Dampen a lens cleaning tissue (e.g. Kodak lens cleaning tissue) on one end with Ethanol (electronic or spectrometer cleaner).

> Put the dampened end of the tissue on one end of the optics and slowly pull it across. Do not rub back and forth!

> If necessary, remove the rest of the Ethanol with the dry end of the tissue.

> Repeat the above until the optical surface is completely clean. For every cleaning swipe, use a new objective cleaning tissue.

6.2 Disposal

The intelli*SCAN* III 10 Module can be returned to SCANLAB for a fee to be properly disposed of.

7 Troubleshooting

If problems occur while operating this device, please check to see if all operating instructions have been adhered to and then carry out the following troubleshooting procedures:

Problem	Possible Cause	Remedy
Low laser power	Dirty objective	Cleaning according to section 6.1
	Altered software parameters	Check input parameters
	Dirty or damaged mirror	Check mirrors, if possible clean them according to section 6.1. If mirrors are damaged have them serviced
Changed laser spot	Dirty objective	Cleaning according to section 6.1
	Dirty or damaged mirror	Check mirrors, if possible clean them according to section 6.1. If mirrors are damaged have them serviced
	Laser out of adjustment	Adjust laser
No laser beam	Flaw in the laser	Check laser and electrical connections
	Flaw in the laser control	If an RTC board is used check all electrical and power connections
	Laser beam path blocked or shutter closed	Check laser beam path.
Scan module does not steer laser beam in one or more directions	Flaw in the scan module control	Check power and data cables. Check software commands.
Differences in the dynamic between the two scanners	Flaw in the connection between DSCB and scanner	Check the cable connection
X and Y axis are changed	Flaw in the cable connection	Check the cable connection
Scan module stopped responding	The scan module's electronics has disconnected the scan module from the power supply due to impermissible supply voltages (see page 21)	Ensure correct supply voltages, switch off scan module, and then restart

If the problems persist, please send the scan module to customer service.

8 Customer Service

SCANLAB GmbH
Siemensstr. 2a
82178 Puchheim
Germany

Tel. +49 (89) 800 746-0
Fax: +49 (89) 800 746-199

www.scanlab.de
info@scanlab.de

The scan module can only be serviced and repaired at SCANLAB. See section 6 "Servicing, Maintenance, Repairs and Disposal", page 30.

9 Warranty

SCANLAB guarantees this product to be free of defects in manufacturing and material. The warranty is valid for 12 months after delivery. Repairs covered under the warranty will be performed at SCANLAB.

The scope of the warranty is limited to repair or replacement of the SCANLAB product.

SCANLAB is responsible for the return delivery of products repaired under warranty; the customer is responsible for delivery to SCANLAB.

SCANLAB will not be held responsible:

- when the product has been damaged through misuse or improper operation
- for damage due to improper laser power (e.g. focused beam on optical surfaces) or improper adjustment
- for damage to optical components (mirrors, objective, etc.) caused by improper handling or cleaning
- for consequential damages
- if the scan module has been altered

If a returned scan module must first be brought into a serviceable state by SCANLAB (e.g. by removing alignment pins and other customer-added parts or cleaning the scan module) before servicing can begin, then the customer must bear the additional cost.

10 Technical Specifications – intelli*SCAN* III 10 Module

(all angle specifications optical)

Aperture

Maximum diameter of the laser beam inside the scan module	10 mm

Control

Input and Output Signals	SL2-100
Maximum range for the input values(1)	–524.288 to +524.287
Calibration	±0.408 rad with ± 503.316
Maximum allowed scan angle (vignetting insignificant) without objective	±0.37 rad

Power supply

Requirements	30 V DC (29-33 V), max. 3 A or ±(15+1.5) V DC, max. 3 A each pole

Optical Performance

Gain error	<5 mrad
Zero offset	<5 mrad
Skew	<1.5 mrad
Nonlinearity	<0.9 mrad/44°
Repeatability (RMS)	< 2 µrad
Temperature drift	
- Offset	15 µrad/K
- Gain	25 ppm/K

8-h-drift (after 30 min warm-up)

at constant ambient temperature and load, without water cooling

- Offset	100 µrad/8h
- Gain	100 ppm/8h

24-h-drift (after 30 min warm-up)

- Gain	100 ppm/24h
- Offset	100 µrad/24h

Tuning Specifications (Dynam. Performance)

... for tuning 124231 (std. vector tuning)

Tracking error	< 0,11 ms
Typical positioning speed (* with 160 mm objective)	75 rad/s (*12 m/s)
Maximum positioning speed	100 rad/s
Typical marking speed (for marking small characters, with 160 mm objective)	3.5 m/s

Mirrors

Coating	dielectrical high performance coating
Wavelength	355 nm
Reflectivity	
• at 355 nm	99.5% per mirror, over the whole range of angles
Maximum laser power	100 W
Maximum laser power density continuous wave	300 W/cm^2
Damage threshold for pulsed operation (with specified working wavelength, pulse length 10 ns, 200 on 1)	0.5 J/cm^2

(1) This maximum range for the input values has to be regarded as theoretical range for the input values. Due to possible vignetting by the mirrors, and the objective, the indicated maximum scan angle has not to be exceeded.

Weight

Galvanometer holder with galvanometer scanners	approx. 2 kg
DSCB	approx. 200 g
DSIB-SL	approx. 155 g

Operating and Storage Conditions

Operating temperature	25 °C ± 10 °C
Storage temperature	−35 °C to +60 °C
Environmental conditions	non-condensing, non-corrosive