Dynamic Focusing Unit
vario*SCAN*$_{de}$ II 20i FT – Type 20-17-A
ID# 151300

Part 2 – Specific Description

1 Introduction

1.1 Content of this Manual

This manual (Part 2 of 2) is the specific description of SCANLAB's vario*SCAN*$_{de}$ II 20i FT dynamic focusing unit and covers the scope of delivery, as well as specifications of the delivered system.

SCANLAB reserves the right to update this operating manual at any time and without notification. The information in this manual supersedes the content of previous manuals.

1.2 Use and Distribution of this Manual

This manual is part of the product. Read it carefully before proceeding to plan, install and operate the scan system. If there are any questions regarding the contents of this manual, please contact SCANLAB (see chapter 1.4).

SCANLAB typically supplies this manual in electronic form (as a PDF file).

- Provide access to this manual in suitable form to all persons involved in planning, development, installation, commissioning and maintenance of the scan system.
- Maintain accessibility to this manual even after planning.
- This manual should accompany the scan system if ownership changes hands.

1.3 Additional Manuals

- Part 1 – General Description:
  The general description provides a product overview, a functional description of the vario*SCAN*$_{de}$ II 20i FT, safety guidelines, the description of installation and start-up as well as maintenance.
- If the vario*SCAN* II is to be used in conjunction with an XY scan system, then also read the documentation of the XY scan system.
- For a specific 3-axis configuration consisting of the vario*SCAN* II, an XY scan system and possibly an objective in conjunction with a correction file, SCANLAB will provide a data sheet listing that configuration's optical properties.
- Furthermore, you will receive the Application Note "Calibrating a 3-Axis Laser Scan System" from SCANLAB.

1.4 Manufacturer

SCANLAB GmbH

Siemensstr. 2a
82178 Puchheim
Germany

Tel. +49 (89) 800 746-0
Fax: +49 (89) 800 746-199

info@scanlab.de
www.scanlab.de

1.5 Identification Plate

The identification plate (see figure 1) with the serial number of the vario*SCAN* II is found on the top of its housing.

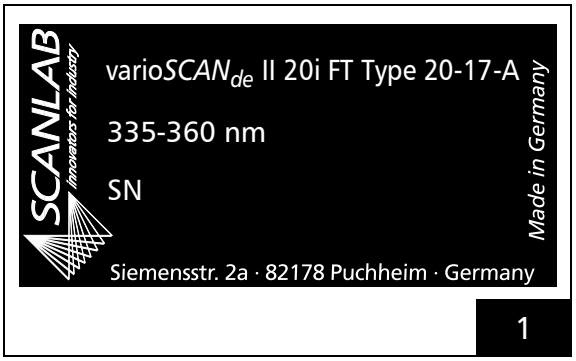

Identification plate with product type, wavelength and serial number (SN)

1.6 Delivery State

The scope of delivery of the vario*SCAN*$_{de}$ II 20i FT – Type 20-17-A, ID# 151300 includes

- the vario*SCAN* II dynamic focusing unit,
- a water-cooled entrance aperture,
- a separate DSCB digital control board.

2 Dimensions

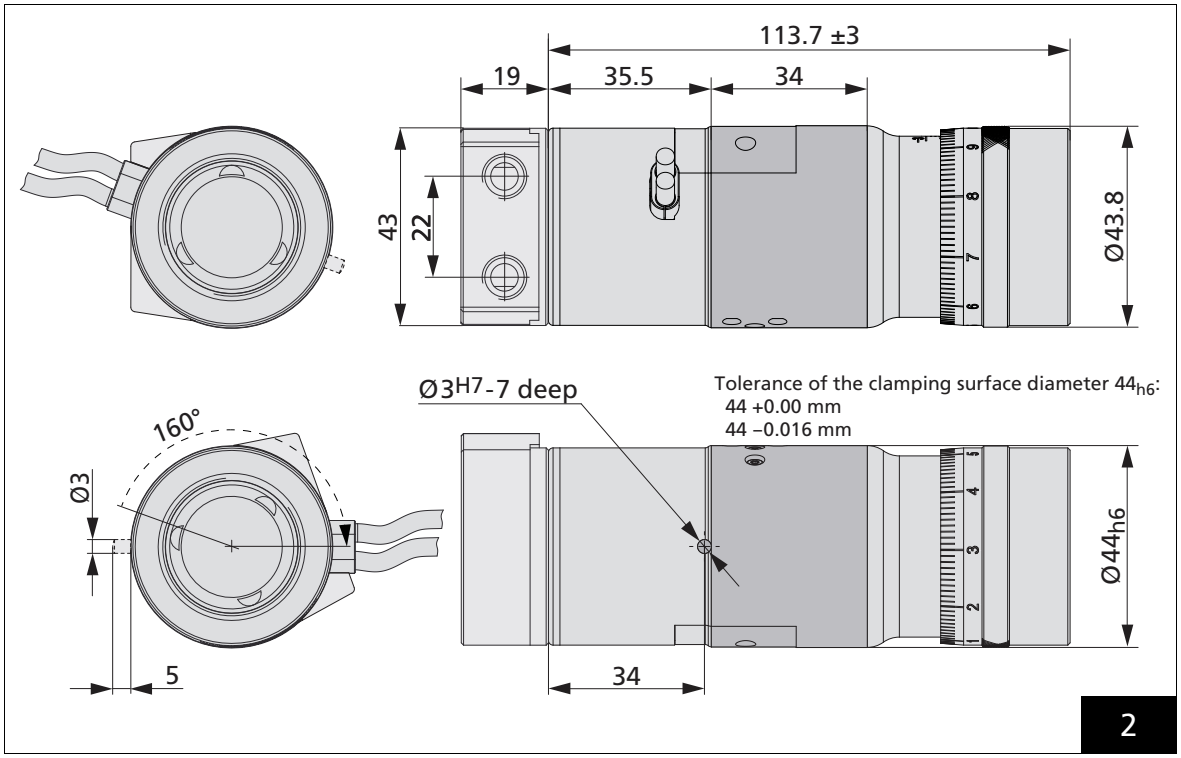

Dimensions of the vario*SCAN*$_{de}$ II 20i FT – Type 20-17-A (all dimensions in mm)

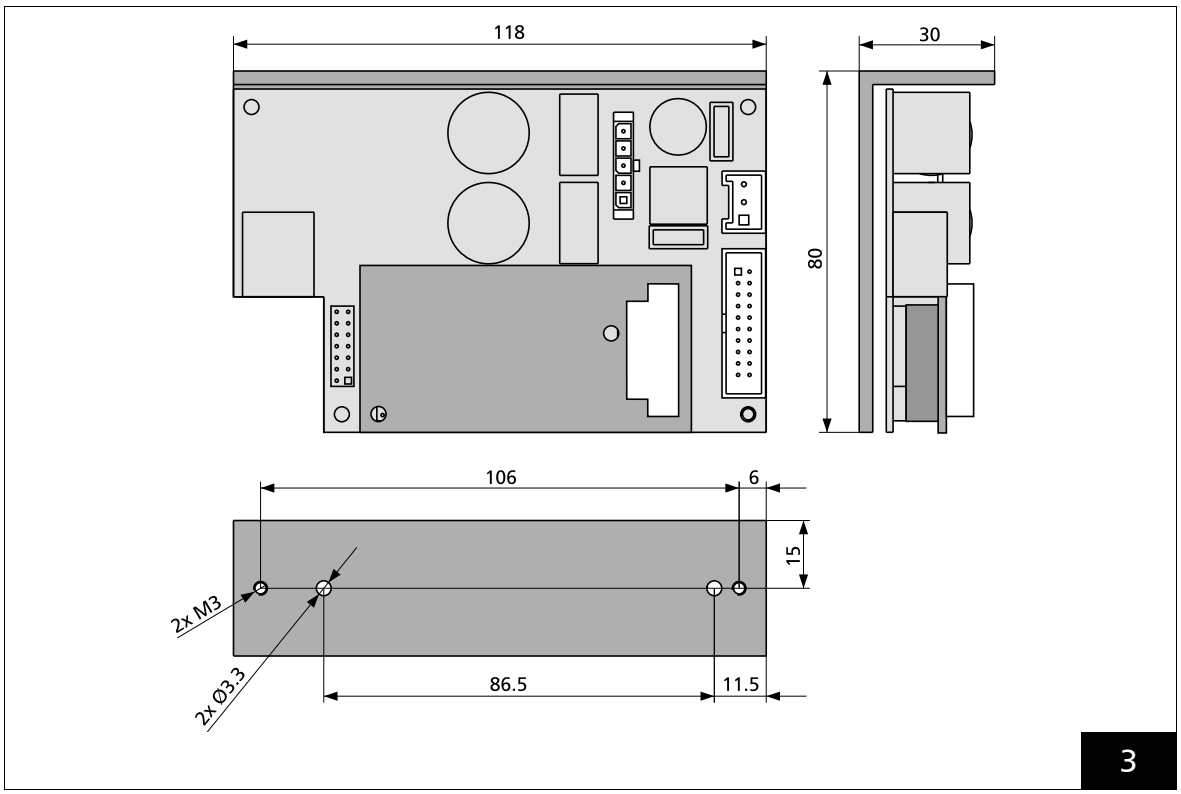

Dimensions of the digital DSCB control board (all dimensions in mm)

3 Technical Specifications

Focusing Unit

Product	vario*SCAN*$_{de}$ II 20i FT
Type	20-17-A
Focusing	F-Theta
Article number	151300

Optical Characteristics

Glass material of optics	Quartz
AR coating	335–360 nm
Input clear aperture	7 mm
Beam expansion factor	2.50
Maximum laser power	20 W
Maximum laser power density continuous wave at the beam entrance	1000 W/cm^2

Electrical Connections

Power supply	30 V DC (29–33 V), maximum 1.5 A or alternatively ±(15 + 1.5) V DC, max. 1.5 A each pole

Motor Specifications

Lens travel	±2 mm
Tracking Error	< 0.55 ms
Typical travel speed	≤ 280 mm/s
Maximum travel speed	400 mm/s
Repeatability	< 0.5 μm
Nonlinearity	< 3 μm
Long-term drift (over 8 hours, at constant environmental conditions)	< 3 μm

Dimensions

vario*SCAN* II	
– Length	113.7 mm ±3 mm(1)
– Motor diameter	Ø43 mm
– Clamping surface diameter	Ø44$_{h6}$ mm
– Objective's outer diameter	Ø43.8 mm
(see figure 2 on page 4)	
Water-cooled entrance aperture	
– Length	19 mm
DSCB control board (see figure 3 on page 5)	118 mm x 80 mm x 30 mm

Weight

vario*SCAN* II (depending on type)	400–700 g
Water-cooled entrance aperture	70 g
DSCB control board	310 g

Operating and Storage Conditions

Ambient temperature for operation	25 °C ± 10 °C
Maximum temperature at the angle plate of DSCB board	50 °C
Maximum current consumption of DSCB board	0.85 A RMS (26 W)
Storage temperature	–35 °C to +60 °C
Environment	non-condensing, non-corrosive

(1) Without water-cooled entrance aperture

Water Cooling Specifications

Intake temperature of coolant water	20...25° C (constant to ±0.5 K[1])
Required flow rate[2]	3 l/min
Volume of entrance aperture's coolant channels	3.3 ml
Pressure loss within entrance aperture[3]	
– at 3 l/min	max. 0.2 bar
Maximum intake pressure	4 bar
Coolant-wetted materials:	
– Heat sink	aluminum alloy (EN-AW 6082)
– O-rings	nitrile rubber (NBR)
Recommended coolant	demineralized water with corrosion inhibitor and biocidal additive, e.g. NALCO Yelmet kit
Connections bore holes	G1/8 threads, 8 mm deep

(1) Elevated ambient temperatures and air humidities might require higher temperatures (above the operational site's dew point) to prevent condensation
(2) To dissipate 100 W of heat and warm the coolant by 0.5 K.
(3) Without pressure loss in supply lines.