*SCAN*cube IV 14 – Prototype

digital scan system, XY2-100

Part 1: Installation and Operation

SCANLAB GmbH
Siemensstr. 2a
82178 Puchheim
Deutschland

Tel. +49 (89) 800 746-0
Fax: +49 (89) 800 746-199

info@scanlab.de
www.scanlab.de

© SCANLAB GmbH 2021

(Doc. Rev. 1.0 d - 12. Oktober 2020)

SCANLAB reserves the right to change the information in this document without notice.
No part of this manual may be processed, reproduced or distributed in any form (photocopy, print, microfilm or by any other means), electronic or mechanical, for any purpose without the written permission of SCANLAB GmbH.
*SCAN*cube is a registered trademark of SCANLAB GmbH.
Other mentioned trademarks are hereby acknowledged as properties of their respective owners.

Table of Contents

1 Introduction 4
- 1.1 Content of this Manual 4
- 1.2 Use and Distribution of this Manual 4
- 1.3 Additional Manuals 4
- 1.4 Manufacturer 4
- 1.5 Symbols 5

2 Safety During Installation and Operation 6
- 2.1 Working Safely with Laser Radiation 6
- 2.2 Save Handling of the Scan Head 7
- 2.3 Electrical Installation Safety 7
- 2.4 Concept for Safe Operation 7

3 Product Overview 9
- 3.1 Unpacking Instructions and Typical Package Contents 9
- 3.2 Operating and Storage Conditions 9
- 3.3 Layout 9

4 Principle of Operation 10
- 4.1 Dynamic Positioning Laser Beams 10
  - Customized Optical Configuration 10

5 Installation and System Integration 12
- 5.1 Mounting the Scan Head 13
- 5.2 Electrical Connections 13

6 Start-up and Operation 14
- 6.1 Checking the Installation 14
- 6.2 Checking the Laser Parameters 14
  - Adjustment and Alignment 15
- 6.3 Checking the Parameters of Application Software 16
- 6.4 Safe Start-up and Shutdown Sequences 16

7 Routine Maintenance and Customer Service 17
- 7.1 Routine Maintenance of the Optical Surfaces 17
  - Routine Maintenance of the Mirrors 17
  - Routine Maintenance of the Objective's Optical Surface 17
- 7.2 Customer Service 18

1 Introduction

1.1 Content of this Manual

This manual (Part 1 of 2) is the specific description of SCANLAB's *SCAN*cube IV 14 scan head and contains the specifications of the delivered system.

SCANLAB reserves the right to update this operating manual at any time and without notification. The information in this manual supersedes the content of previous manuals.

The product status is "prototype", therefore modifications are possible.

1.2 Use and Distribution of this Manual

This manual is part of the product. Read it carefully before proceeding to plan, install and operate the scan system. If there are any questions regarding the contents of this manual, please contact SCANLAB (see chapter 1.4).

This manual is particularly intended for system integrators, i.e. laser system planners, developers and safety officers, as well as persons involved in scan system installation, start-up, maintenance, deinstallation, storage or transport preparation. It is the product purchaser's/operator's responsibility to provide access to this manual (or relevant parts) in suitable form to all involved persons.

SCANLAB typically supplies this manual in electronic form (as a PDF file).

- Provide access to this manual in suitable form to all involved persons (see above).
- Maintain accessibility to this manual even after planning.
- This manual should accompany the scan system if ownership changes hands.

1.3 Additional Manuals

- Part 2: Specific Description
  This part describes the exact type of the scan head with the technical specifications and contains information about the control.

1.4 Manufacturer

SCANLAB GmbH

Siemensstr. 2a
82178 Puchheim
Deutschland

Tel. +49 (89) 800 746-0
Fax: +49 (89) 800 746-199

info@scanlab.de
www.scanlab.de

1.5 Symbols

Warnings

The warning notices in this manual are indicated by a symbol and set against a gray background. The notices are accompanied by signal words conveying the degree of hazard. To prevent accidents, injuries and material damage, always comply with these notices.

Danger!

... indicates a possibly dangerous situation that could result in death or injuries if not avoided.

Caution!

... indicates a possibly dangerous situation that could result in material and environmental damage if not avoided.

Tips and Recommendations

Note

... highlights useful tips and recommendations, as well as information for efficient and trouble-free operation.

2 Safety During Installation and Operation

The scan head is solely intended for commercial use. It is designed to be incorporated in a laser system and does not meet all criteria of a ready-to-use consumer product. Place the scan head into operation only after integration in a laser system which itself complies with the regulations of all applicable standards and directives (of the country concerned). The scan head is not qualified for use as a toy, in a domestic setting, nor in unfavorable environmental conditions (for example, outdoors). The operator is responsible for implementing measures to prevent such inappropriate usage.

The safety and warning notices in this manual are indicated by a symbol set against a gray background:

Instructions that may affect a person's health are marked with a warning triangle next to the word "Danger".

Instructions that recommend appropriate use of this device or warn of damage that may occur to it are identified by a circle with an "X" in it, next to the word "Caution".

To reduce the risk of injury, please observe the following guidelines.

2.1 Working Safely with Laser Radiation

The laser system's laser radiation presents serious health hazards, e.g. possible eye and skin injuries, injuries from toxic fumes generated by the laser process, or injuries from laser-radiation-induced fire. Therefore, all users must be trained in their usage of the scan head and laser system (particularly working safely with laser radiation) and must be provided with appropriate protective clothing. As a minimum, users must observe the following safety measures:

- For switched-on laser:
  - always wear protective glasses suitable for the laser's wavelength and power
  - never look into the laser beam
  - do not place parts of the body in the laser beam
- Only switch the laser on after power-up of the control PC for the scan head (also see "Safe Start-up and Shutdown Sequences" on page 16).
- For alignment work, reduce the laser power to a minimum value (see "Adjustment and Alignment" on page 15).
- During operation, do not adjust the laser power above the maximum allowed value (see Part 2 – Specific Description).
- Switch off the laser when it is not absolutely needed.
- Comply with all applicable laser safety regulations.

Furthermore, the laser system's safety-related functionality must minimize risk during normal operation, commissioning and maintenance work. The needed constructional measures depend on the laser's type and power and the application.

Needed constructional measures might include:

- Installation of necessary safety devices, e.g.:
  - An EMERGENCY STOP for the laser and the scan head (automatic and/or manual EMERGENCY STOP that immediately turns off, blocks or attenuates the laser beam and immediately switches off the scan head)
  - Shielding of the laser beam path for blocking external emission (e.g. a protective housing opaque to laser radiation, shutter or laser attenuator)
  - Safety devices that ensure safe switch-on and switch-off sequences of system components, that prevent unintended start-up of the laser and scan head and that prevent uncontrolled modification of laser parameters
  - Safety devices that also perform periodic functional checks (e.g. status monitoring) during operation and that possibly trigger an automatic EMERGENCY STOP upon detection of faults
- Installation of warning devices
- Installation of warning signs in areas of risk (typically the area of risk is where intended or unexpected laser radiation may occur):
  - Install warning signs displaying information for the applicable laser class (e.g. see IEC 60825-1).

Certain laser radiation hazards may occur if the scan head incurs damage (e.g. from damaged scan head optics). Therefore:

- Regularly inspect the scan head.
- Regularly check the entering laser beam's parameters (see Seite 14).
- Take into account that the scan head's housing does not offer 100% protection against laser radiation (under all possible conditions), particularly if the laser beam directly deflects onto the housing itself instead of being deflected toward the beam exit.

Special measures may be required when performing alignment work: The beam conditioning components need to be accessible for manual adjustments even while the laser is active.

2.2 Save Handling of the Scan Head

Improper handling can also damage the scan head. It contains sensitive optics. So treat them with care. Mechanical damage to the scan head impairs its quality and – in further use – may cause material damage and subsequent injuries (e.g. from laser radiation).

2.3 Electrical Installation Safety

Improper electrical installation induces health hazards from electric shock, shorts (and their consequential risks) etc., both during and after installation. Improper electrical installation can also result in functional faults or damage to the scan head. Subsequent usage may then have health consequences (e.g. via laser radiation).

Therefore, observe the following recommendations:

- Installation and commissioning should only be performed by persons with sufficient expertise in safe usage of electrical equipment.
- Perform installation and maintenance work only with switched-off laser and power supply.
- Comply with all ESD directives.
- Observe all notices in the chapter 5.2 "Electrical Connections" on page 13.
- If the scan head is exposed to electromagnetic fields exceeding the 2014/30/EC (EMC) guidelines, then special shielding will be required.

2.4 Concept for Safe Operation

System integrators (i.e. planners, developers and safety officers for the laser system in which the scan head will be integrated) bear sole responsibility for a safety concept that ensures safe operation of the laser system (and thus the scan head).

When developing a safety concept, the following should also be taken into account:

- The main prerequisites for safe operation are a correct installation, correct safety-related integration into the laser system (e.g. programming of process monitoring or laser safety functionality) and a correctly performed alignment. The corre-

sponding work should only be performed by qualified specialists. Their training, knowledge, experience and familiarity with applicable regulations must enable them to perform the assigned work and self-reliantly recognize and avoid possible hazards. Only trained personnel should program the laser system.

  – Supply this guide in appropriate form to the involved specialists.

- The safety concept should also cover maintenance.
- When creating and maintaining a safety concept and the resulting operating procedures, you should additionally take into consideration all applicable safety, accident prevention and environmental regulations as well as directives and standards relevant to CE-labeling of the overall system. The following directives and standards are typical for a system with an integrated scan head:
  – EC Guideline 2014/35/EC
    Low Voltage Directive
  – EC Guideline 2014/30/EC
    Electromagnetic Compatibility
  – EC Guideline 2006/42/EC
    Machinery Directive
  – IEC 60204-1:2016 Safety of machinery – Electrical equipment of machines - Part 1: General requirements
  – IEC 60825-1:2014 Safety of laser products – Part 1: Equipment classification and requirements

Additional, different, or more current requirements may be associated with the guidelines and standards applicable to your specific area of application.

Complying with Relevant Standards for the CE Label

The excelli*SCAN* is delivered as an OEM component conceived of for integration into a laser scan system.

The system manufacturer bears the responsibility for complying with the standards and guidelines required for equipment usage and for the CE label.

3 Product Overview

3.1 Unpacking Instructions and Typical Package Contents

- Carefully remove the scan head from the package.
- Protect the scan head from dust and other contaminants.
- Keep the packaging, so that in case of repair the scan head can be properly repackaged and returned to SCANLAB.
- Also remove all other articles from the package. Check that all parts have been delivered. Refer to the corresponding packaging list.
  A scan head package typically includes:
  – a product test protocol with test data
  – optional an objective mounting set
  – optional an RTC control board for controlling the scan head
  – this manual

3.2 Operating and Storage Conditions

For storage, operation and servicing, make sure the following environmental conditions are met:

- The storage temperature for the scan head should be between −35 °C and +60 °C.
- The operating temperature is 25 °C ± 10 °C.
- Protect the scan head from humidity, dust and corrosive vapors to avoid damage to the mirrors, optics and electronics.
- Avoid strong electromagnetic fields and static electricity. These can damage the electronics of the interface and amplifier boards.

3.3 Layout

Figure 1 shows the layout of the scan head with the electrical connection. For the exact dimensions refer to Part 2 – Specific Description.

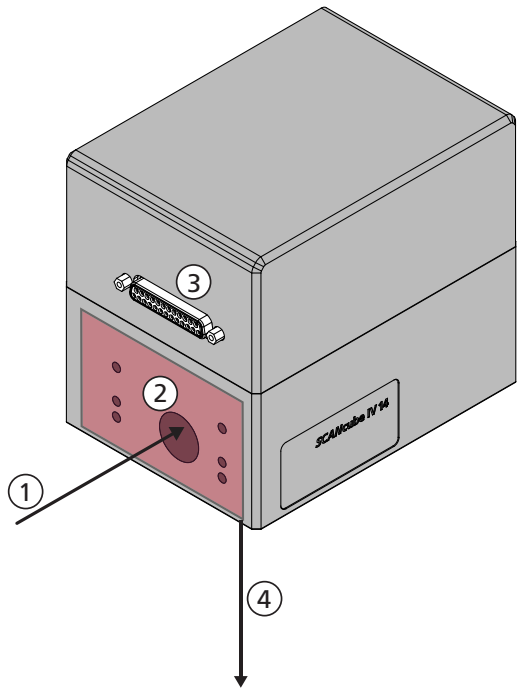

Legend

1 Entering beam
2 Beam entrance
3 Electrical connection
4 Emerging beam
Red: Mounting area with drilling pattern

1

Scan head overview with connector position

4 Principle of Operation

4.1 Dynamic Positioning Laser Beams

The primary tasks of an X-Y scan head are to deflect a laser beam in the X-Y directions and to focus the beam onto the working plane.

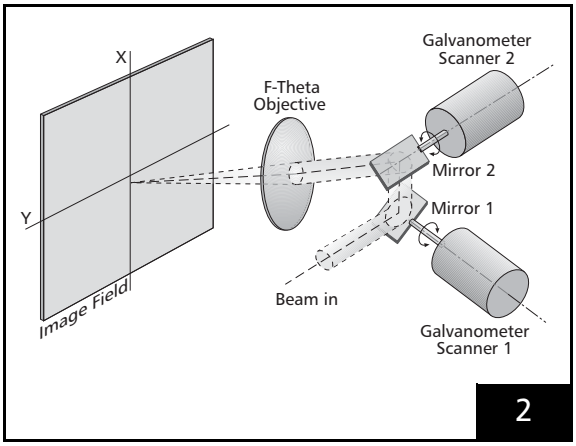

Basis of Operation: beam deflection via two galvanometer scanners

The beam deflection task is realized with the help of two tiltable deflection mirrors (see figure 2). The beam enters the scan head through the input aperture and is first deflected in the Y direction by mirror 1 attached to galvanometer scanner 1. The beam then goes on to be deflected in the X direction by mirror 2 attached to galvanometer scanner 2. The resulting deflection angles can be precisely and high-dynamically adjusted by controlling the positions of the galvanometer scanners.

Focusing the beam onto the working plane can be achieved with the help of a scan lens fitted to the scan head's beam exit hole. If an F-Theta objective is used, the position of the focal point on the image field will be directly proportional to the angle of incidence of the beam.

Alternatively, focusing of the beam can be realized with the help of a dynamic focusing system (for instance, SCANLAB's vario*SCAN* 20) positioned in front of the scan head's entrance aperture.

Customized Optical Configuration

To obtain optimum optical performance for a particular laser application, the scan head's optical configuration must meet the requirements of the application and the used laser system. To achieve optimum reflectivity at the mirrors, SCANLAB therefore selects mirror coatings appropriate for the wavelength and power of the user's laser. The size of the mirrors or the scan head's aperture is selected in accordance with the desired spot size and scan speed. The spot size is also influenced by an objective, which is also selected in accordance with the desired field size (or working distance A between the laser input and the image field) as well as the wavelength and power of the user's laser.

The user, on the other hand, has to ensure that the parameters of the entering laser beam (wavelength, power density and diameter) match the specifications of the scan head.

First the coatings of the deflection mirrors are designed for a defined wavelength or wavelength range. If the wavelength of the employed laser deviates from the specified value, the mirrors will not work properly and can be destroyed.

Second for the mirror coatings also the allowed laser rating is defined. If the specified values are exceeded, destruction of the coatings might result (also see chapter 6.2 "Checking the Laser Parameters" on page 14).

In addition the deflection mirrors are intended for a specific beam diameter and a maximum allowed scan angle. If the beam diameter or the scan angle exceeds the specified maximum values, vignetting of the beam can occur. The beam is then no longer fully deflected by the mirrors or can no longer fully pass through the objective. A portion of the beam is then absorbed by the scan head, resulting in a loss of power density at the edges of the image field. Furthermore, the interior of the scan head and the objective might be damaged due to the absorption of laser radiation.

The amount of possible power loss depends, among other things, on the beam profile of the employed laser. For a Gaussian beam profile, beam vignetting is insignificant when the scan angle of each mirror does

not exceed the *maximum allowed scan angle* defined in Part 2 – Specific Description and when the diameter of the beam doesn't exceed the specified aperture.

Caution!

- Make sure the aperture and the coatings of the deflection mirrors meet the requirements of your application (see "Technical Specifications" in Part 2 – Specific Description). For information on tolerances and deviations, please contact SCANLAB.
- Make sure that the focal length, the typical image field size and the wavelength of the objective meet the requirements of your application. If this is not the case, then please contact SCANLAB.
- Check if the wavelength of the input beam and the maximum ratings for beam diameter and laser power match the specifications of the scan head (see "Technical Specifications" in Part 2 – Specific Description).
- When using scan angles larger than the *maximum allowed scan angle* indicated on "Technical Specifications" in Part 2 – Specific Description, some vignetting inside the scan head and the objective can occur and damage to the interior of the scan head might result. If your application requires larger scan angles, then please contact SCANLAB.
- The maximum allowed scan angle is derived from the geometric and optical data of the employed components (see the chapter "Customized Optical Configuration" on page 10). In some cases, particularly with sufficiently small calibration angles, the maximum allowed scan angle can be larger than the maximum adjustable angle. In such cases, the specified maximum allowed scan angle has no practical relevance.

5 Installation and System Integration

Figure 3 shows the scan head with the mounting components.

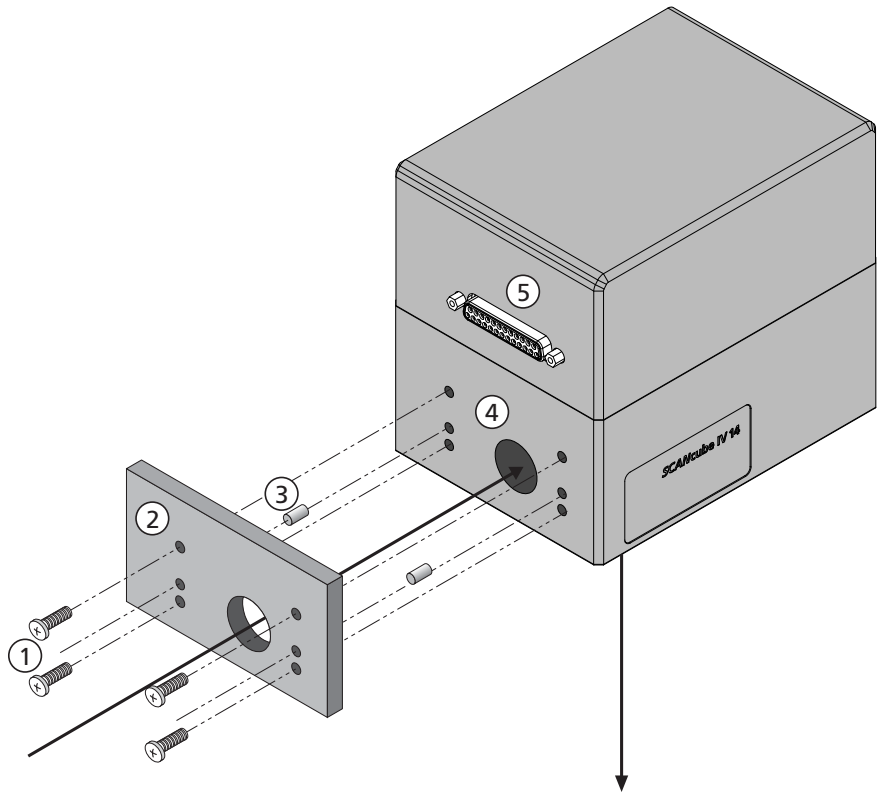

Legende

1 Mounting screws (4 x M5)*
2 Laser system flange*
3 Alignment pins (2 x 4_{h6})*
4 Beam entrance side with mounting bore holes
5 Electrical connections (25-pin female D-SUB connector)

(* not included in the scope of delivery)

3

Scan head with mounting assembly

5.1 Mounting the Scan Head

Caution!

- To align and fasten the scan head, only use the alignment and mounting holes depicted in figure 3 on page 12. Other holes cannot be used for aligning and fastening the scan head or for any other purposes.

For mounting the scan head, the beam entrance side provides bore holes designed for attachment to a standardized flange on the laser system – see figure 3 on page 12. The laser system flange, alignment pins and mounting screws are not included in the package.

The dimensions of the beam entrance side and its bore holes are shown in Part 2 – Specific Description. The beam entry position is defined by two 4^{H7} alignment holes on the mounting bracket. The laser beam axis must be identical with the laser input axis of the scan head. To ensure this alignment, the laser system flange must have appropriate holes to accommodate two 4_{h6} alignment pins and four M5-threaded mounting screws.

On designing the attachment flange, also consider the position of the scan head's electrical connections (see Part 2 – Specific Description).

Mount the scan head in the following manner:

(1) Carefully remove the protective covering of the laser input hole (e.g. with a small screwdriver).

(2) Place two 4_{h6} alignment pins in the corresponding 4^{H7} alignment holes on the flange or beam entrance side.

(3) Place the scan head on the flange so that the alignment pins line up with the alignment holes on the flange and the beam entrance side. This way the scan head is aligned with respect to the laser.

(4) Fasten the scan head to the flange by installing four mounting screws with M5 threads into the corresponding threaded mounting holes.

(5) On mounting the scan head consider a correct alignment in respect to the entering laser beam (also see chapter "Adjustment and Alignment" on page 15) and in respect to the working field.

5.2 Electrical Connections

Figure 1 on page 9 shows the position of the electrical connections on the scan head.

The scan head provides a 25-pin female D-SUB connector for power supply and digital data transfer. for it's pin-out and further information about the power supply, refer to Part 2 – Specific Description.

6 Start-up and Operation

6.1 Checking the Installation

Before operating the scan head, carefully check the following:

- Were the mechanical installation and electrical wiring fully and correctly carried out as described in chapter 5 "Installation and System Integration" on page 12?
- Is the scan head equipped with the correct objective and suitable mirrors? Therefore, please compare the technical specifications in Part 2 – Specific Description.
- Are all optical components clean and free of dust? If necessary, clean the optical components as described in chapter "Routine Maintenance of the Mirrors" on page 17.

6.2 Checking the Laser Parameters

The scan head's deflection mirrors and objective are designed for a laser beam with defined parameters.

- Compare the technical specifications in Part 2 – Specific Description with the requirements of your application. For information on tolerances and deviations, please contact SCANLAB.

Caution!

- Check, that the following specifications are not exceeded and are compatible to your system:
  - working wavelength
  - aperture
  - maximum laser power
  - laser power density
  - beam diamater
  - damage threshold

The values specified for the maximum laser power rating and the laser damage threshold only apply to the scan mirrors. They do not apply to the scan objective or other components. Typically, however, the damage thresholds of scan objectives are similar to that of scan mirrors.

Also be aware that additional optical components in the optical beam path can focus a part of the laser beam onto the mirror and thereby dramatically lower the effective damage threshold. For instance, the lenses or protective window of a scan objective – though coated with an antireflex coating – always reflect a certain fraction of the laser light. If the lenses are shaped such that the reflected laser light is focused onto the scan mirrors, the power density within this focus may be more than 1000 times larger than in the original beam and the effective damage threshold will be correspondingly reduced. In particular, the mirrors can be damaged by lasers with high pulse energies, short pulse lengths and good beam quality. Contamination on or damage to the optical surfaces of the objective or protective window can further increase residual reflectivity, which further increases the danger of mirror damage from back reflections.

Furthermore, the specified values only apply to clean and new mirrors. Mirror contamination (dust, fingerprints, cleaning residue, deposits from laser processing etc.) as well as mechanical damage (scratches, fractures, burn-in, damage by an improper cleaning procedure) can considerably reduce the damage threshold.

The specified damage threshold for pulsed operation is the maximum energy density for which no mirror-surface damage is expected for the specified wavelength and for two hundred pulses with the specified pulse length onto the same mirror spot (see note below).
In general, the damage threshold considerably decreases with an increasing number of laser pulses. In continuous operation, SCANLAB therefore recommends only applying suitably reduced energy densities (depending on the repetition rate and the laser parameters, typically five times smaller than the specified pulse damage threshold, if necessary even smaller).

The damage threshold for pulsed operation also decreases with decreasing pulse length. In particular, this effect must be considered for pico- or femto-second lasers.

Note

- The specified damage threshold energy density corresponds to 0% damage probability (see ISO 11254). Here, damage means a permanent, laser induced surface modification. Test parameters: angle of incidence: 45°; pulse length (FWHM): as specified (see Part 2 – Specific Description); beam profile: TEM00; 200 pulses per test site; mirrors in clean condition; inspection method: Nomarski dark field microscope (150x).

Adjustment and Alignment

To ensure optimum performance of the scanning system, it is crucial that the laser beam and the scan head are precisely aligned with respect to each other. Incorrect alignment might lead to the following effects:

- vignetting of the laser beam
- a large, irregular spot
- arbitrary translation of the image field

In most cases, vignetting will be the predominant effect. Vignetting occurs if the laser beam is not able to fully pass through or be reflected by the optical components. Part of the beam's diameter will be cut off, resulting in power loss and possible system damage due to excessive absorption of laser power.

To avoid significant vignetting, the system must be aligned as precisely as possible, particularly in terms of the beam position relative to the scan head's optical axis. If the laser beam profile is Gaussian, the maximum tolerances appropriate for most applications are:

- tilt of the laser beam: < 5 mrad
- displacement: < 0.3 mm

If you use a laser with "flat top" beam profile, it can be necessary to align the system with even higher precision. Avoid vignetting especially for a high power laser. Align carefully and – if necessary – reduce the beam diameter to an appropriate value.

Danger!

- Do not stare directly into the laser beam or at any of its deflected radiation. Keep all parts of the body away from direct contact with the laser beam or any of its deflected radiation.
- Adjust the output beam path of the scan head by means of a laser with a laser class not higher than 2. If this is not possible, the laser should be operated at the lowest power. Avoid dangerous deflected radiation!

Caution!

- Remove the protective covers from the scan head's beam entrance and beam exit or objective prior to first-time operation.

In order to achieve optimal processing quality, it may be necessary to fine-tune the working distance A. The working distance A is defined as the distance between the axis of the laser beam entering the scan head and the nominal working plane – see Part 2 – Specific Description. Adjust the working distance A to the value provided in the technical specifications in Part 2 – Specific Description.

The working distance A can be directly adjusted in small steps. Alternatively, the working distance A can also be adjusted indirectly via the beam divergence – this can be achieved with the help of a beam expander or a variable focusing system (for example, SCANLAB's vario*SCAN* 20) placed in front of the scan head's entrance aperture.

6.3 Checking the Parameters of Application Software

Before you start a laser application, you must carefully check your application software with regard to the maximum allowed scan angle and working area.

If scan angles larger than the *maximum allowed scan angle* indicated in "Technical Specifications" in Part 2 – Specific Description are used, some vignetting inside the scan head can occur and damage to the interior of the scan head and the objective might result. If your application requires larger scan angles and a larger image field, then contact SCANLAB for guidance.

6.4 Safe Start-up and Shutdown Sequences

Caution!

- Before first-time operation, check the polarities of the power supply connections for the scan head.

Danger!

- Always turn on the scan head control (controller with RTC control board and control software) and the power supply for the scan head prior to turning on the laser. Otherwise there is the risk that the laser beam might be deflected in an arbitrary direction.
- Power for the scan head must be applied only when scan head control is active.

Note

- If the *SCAN*cube IV is switched on before the controller (with RTC control board) is started, then the scan mirrors deflect the laser beam to the center of the image field. In contrary, if the *SCAN*cube IV is switched on with the controller already started but with the application software still not started, the scan mirrors deflect the laser beam to the border of the image field (X and Y bit value 0).

To assure safety during start-up, proceed exactly as follows:

(1) Turn on the controller containing the RTC control board and start up the control software.

(2) Turn on the power supply for the scan head.

(3) Turn on the laser.

When shutting down the system, turn off the components exactly in reverse order.

7 Routine Maintenance and Customer Service

7.1 Routine Maintenance of the Optical Surfaces

Danger!

- Never stare at the laser beam or its deflected radiation when performing routine maintenance of the scan head. Keep all parts of the body away from direct laser beams or deflected radiation. When the laser beam is not required, turn it off or reliably block it via a shutter to prevent its entry into the scan head.

Dirty objectives and mirrors increase the absorption of laser power by their respective optical surfaces. Dirt, dust and other contaminants can distort the laser beam, burn into the surface and damage the optical elements. The warranty does not cover any damage due to improper use, cleaning or handling.

Routine Maintenance of the Mirrors

Caution!

- Improper cleaning procedures – for instance cleaning metal-coated mirrors with acetone – can cause irreparable damages to the mirror coatings. Therefore, if the above-mentioned cleaning procedure (with air) is insufficient, always contact SCANLAB for guidance before you start to perform any further cleaning procedures yourself.

The deflection mirrors are especially sensitive components and should not be touched or removed from the scan head. Nevertheless, you must regularly inspect the mirrors for dirt, dust and other contaminants. The mirrors must also be inspected after a long storage time.

If inspection reveals dust particles, then remove them by blowing air on the mirror's surface with the help of a rubber squeeze bulb or a source of compressed clean air.

If the dust cannot be removed in this manner, or if inspection reveals more serious contamination, then contact SCANLAB for guidance. In extreme cases, the complete scan head must be returned to SCANLAB for inspection and cleaning of the mirrors. However, in some situations SCANLAB might be able to recommend a user-performed special cleaning procedure.

Routine Maintenance of the Objective's Optical Surface

The outermost optical surface of the scan head's objective is cleanable by the user. Regularly check the scan head's objective.

Danger!

- Zinc Selenide optics should not be cleaned with acids, since they may react to produce hydrogen selenide, which is a highly toxic gas, even in small quantities.

If dirt, dust or other contaminants are found, clean the objective's optical surface as follows: Using a rubber squeeze bulb or compressed clean air, blow air on the objective's surface to remove dust and dirt particles. If the objective is still not clean, then use solvent and lens cleaning tissues as described below:

(1) Create a lens-tissue brush by folding a clean lens tissue so that the fold is about half as wide as the objective's lens surface.

(2) Dampen the lens-tissue brush with solvent. Don't use too much solvent, because otherwise drying marks might appear.

(3) Carefully grip one end of the dampened lens-tissue brush without touching any part of the tissue that will touch the lens surface.

(4) Place the dampened lens-tissue brush in the center of the objective's lens surface. Then use a *circular* motion to wipe slowly but steadily from the center of the optic around to the outer edges.

Repeat the above procedure until the objective's optical surface is completely clean. For each cleaning swipe, create a new lens-tissue brush.

Cleaning Notes

- Avoid skin contact with the optic.
- Use only clean lint-free tissues specially manufactured for cleaning optics (e.g. "Kodak lens cleaning paper"). Always use lens tissues with a solvent, because dry tissue can scratch optical surfaces.
- Use a solvent such as acetone or isopropanol of high purity (evaporation residue < 0.001%). Read and follow the safety advice and warnings for the solvents you will be using.
- Use clean gloves or finger cots that are impermeable to the organic cleaning solvents you will be using.
- Always wipe slowly but steadily, using a circular motion from the center of the optic around to the outer edges. Do not rub back and forth!
- Only wipe with slight pressure!

7.2 Customer Service

Servicing and Repairs

Except for routine maintenance of the optical surfaces, the scan head does not contain user-serviceable internal parts. All servicing and repairs should be performed only at SCANLAB. Only SCANLAB has the proper test facilities and procedures to service, repair and calibrate the system optimally.

Product Warranty

SCANLAB guarantees this product to be free of defects in manufacturing and material. The warranty is valid for 12 months after delivery. Repairs covered under the warranty will be performed at SCANLAB.

The scope of the warranty is limited to repair or replacement of the SCANLAB product.

SCANLAB is responsible for the return delivery of products repaired under warranty; the customer is responsible for delivery to SCANLAB.

SCANLAB will not be held responsible:

- when the product has been damaged through misuse or improper operation
- for damage due to improper laser power (e.g. focused beam on optical surfaces) or improper alignment
- for damage to optical components (mirrors, objective, etc.) caused by improper handling or cleaning
- for consequential damages
- if the scan head has been altered
- if the warranty seal on the scan head's housing has been broken

If a returned scan head must first be brought into a serviceable state by SCANLAB (e.g. by removing alignment pins or attachment hardware and cleaning the unit) before servicing can begin, then the customer must bear the additional cost.

Contacting SCANLAB

For service, repairs, advice or information, simply contact SCANLAB using one of the contact possibilities listed below:

SCANLAB GmbH
Siemensstr. 2a
82178 Puchheim
Deutschland

Tel. +49 (89) 800 746-0
Fax: +49 (89) 800 746-199

info@scanlab.de
www.scanlab.de

Product Disposal

The scan head can be returned to SCANLAB for a fee to be properly disposed of in compliance with environmental regulations.