varioSCAN$_{de}$ II 20i
Dynamic Focusing System

Part 1 – General Description

SCANLAB GmbH
Siemensstr. 2a
82178 Puchheim
Germany

Tel. +49 (89) 800 746-0
Fax: +49 (89) 800 746-199

info@scanlab.de
www.scanlab.de

© SCANLAB GmbH 2024

(Doc. Rev. 1.1.8 e - December 27, 2023)

SCANLAB reserves the right to change the information in this document without notice.

No part of this manual may be processed, reproduced or distributed in any form (photocopy, print, microfilm or by any other means), electronic or mechanical, for any purpose without the written permission of SCANLAB GmbH.

All mentioned trademarks are hereby acknowledged as properties of their respective owners.

Contents

1 General ... 6
1.1 Contents of this Manual ... 6
1.2 Usage and Distribution of this Manual ... 6
1.3 Additional Manuals ... 6
1.4 Manufacturer ... 6
1.5 Symbols ... 7
1.6 Product Overview ... 7
1.6.1 Application ... 7
1.6.2 Components ... 7
1.7 Unpacking and Scope of Delivery ... 8

2 Safety During Installation and Operation ... 9
2.1 Guidelines and Standards ... 9
2.1.1 Conformity to EC Guidelines for Electromagnetic Compatibility (EMC) ... 9
2.1.2 Complying with Relevant Standards for the CE Label ... 9
2.2 Electrical Safety ... 10
2.3 Laser Safety ... 11

3 Principle of Operation ... 14
3.1 Mechanical and Optical Overview ... 14
3.1.4 Operating Principle ... 14
3.2 DSCB Digital Servo Control Board ... 16
3.2.1 Configuring the Servo and Start Behavior (i*DRIV*E Functions) ... 16
3.2.2 Internal Protective Functions ... 16
3.3 System Integration ... 17
3.3.1 Integration into a 3-Axis Scan Configuration ... 17
3.3.2 Digital Interface Boards ... 19
3.3.3 RTC Control Boards ... 20

4 Installation ... 22
4.1 Installing the vario*SCAN* II ... 22
4.1.1 ... 25
4.2 Water Cooling (optional) ... 25
4.2.1 Water-cooled aperture (optional) ... 27
4.2.2 Selecting an Appropriate Water Cooling System ... 27
4.2.3 Coolants ... 28
4.2.4 Connecting to a Cooling System ... 29
4.3 Installing the Electronic Components ... 30
4.3.1 Installing the DSCB Servo Control Board ... 30
4.3.2 Installing the Digital Interface Board (optional) ... 33
4.3.3 Installing the Electronic Box ... 35
4.4 Operating and Storage Conditions ... 36

5 Electrical Connections ... 37
5.1 .Control via an Interface Board in the Electronic Box ... 38
5.1.1 Connecting the vario*SCAN* II ... 38
5.1.2 Connecting the RTC Board ... 38

5.1.3 Connecting the Power Supply ... 40
5.2 Control via a Separate DSIB Interface Board ... 41
5.2.1 Connecting the vario*SCAN* II ... 42
5.2.2 Connect the DSCB and DSIB Boards ... 42
5.2.3 Connect the DSIB and RTC Boards ... 42
5.2.4 Connecting the Power Supply ... 44
5.3 Control via a Separate DSIB-SL Interface Board ... 44
5.3.1 Connecting the vario*SCAN* II ... 45
5.3.2 Connecting the DSCB and DSIB-SL Boards ... 45
5.3.3 Connecting the DSIB-SL and RTC Boards ... 45
5.3.4 Connecting the Power Supply ... 46
5.4 Data Cable ... 47
5.5 Power Supply ... 49
5.5.1 Specifications ... 49
5.5.2 Connecting ... 49

6 Control ... 51
6.1 Position Control ... 51
6.1.1 Digital Control via a SCANLAB Digital Interface Board (without RTC Board) ... 51
6.1.2 Digital Control with an RTC Board ... 51
6.2 Returned Signals ... 53
6.2.1 Digital Control via a Digital Interface Board (without RTC Board) ... 53
6.2.2 Digital Control with an RTC Board ... 53
6.3 Process Monitoring ... 56
6.4 Configuring the Start Behavior ... 56
6.5 Tracking Error Compensation ... 57
6.5.1 Using the vario*SCAN* II with excelli*SCAN* and *SCAN*ahead Control ... 57
6.5.2 High Dynamic Requirements ... 57

7 Commissioning ... 58
7.1 Checking the Installation ... 58
7.2 Checking the Laser Parameters ... 59
7.3 Integration into a 3-Axis Configuration ... 60
7.4 Safe Startup and Shutdown Sequences ... 61
7.5 Alignment ... 62
7.5.1 Recommended Tolerances ... 62
7.5.2 Aligning the Components ... 62
7.5.3 Adjusting the Distance to the Scan System ... 63
7.5.4 Adjusting the Working Distance ... 63
7.5.5 Checking the Z-Axis Calibration ... 64
7.6 Monitoring Operating Temperature and Current Draw ... 64

8 Maintenance and Customer Service ... 65
8.1 Periodic Inspection and Cleaning of the Objective ... 65
8.2 Customer Service ... 67
8.2.1 Servicing and Repairs ... 67
8.2.2 Warranty ... 67
8.2.3 Contacting SCANLAB ... 67

8.2.4 Product Disposal 67
9 Troubleshooting 68
9.1 Fault Diagnosis and Functional Test 69
10 General Technical Specifications 70

1 General

1.1 Contents of this Manual

This manual is a general description of the vario*SCAN*$_{de}$ II 20i dynamic focusing system from SCANLAB. This general description – Part 1 of 2 parts – provides a product overview, a functional description, general safety tips and instructions on installation, commissioning and maintenance.

SCANLAB reserves the right to update this operating manual at any time and without notification. The information in this manual supersedes the content of previous manuals.

1.2 Usage and Distribution of this Manual

This manual is part of the product. Read it carefully before proceeding to plan, install and operate the scan system. If there are any questions regarding the contents of this manual, contact SCANLAB (see chapter 1.4).

This manual is particularly intended for system integrators, i.e. laser system planners, developers and safety officers, as well as persons involved in scan system installation, start-up, maintenance, deinstallation, storage or transport preparation. It is the product purchaser's/operator's responsibility to provide access to this manual (or relevant parts) in suitable form to all involved persons.

SCANLAB typically supplies this manual in electronic form (as a PDF file).

- Provide access to this manual in suitable form to all involved persons (see above).
- Maintain accessibility to this manual even after planning.
- This manual should accompany the scan system if ownership changes hands.

1.3 Additional Manuals

- Part 2 – Specific Description:
  Covers the delivered product's scope of delivery and technical specifications.
- If the vario*SCAN* II is to be used in conjunction with an XY scan system, then also read the documentation of the XY scan system.
- For a specific 3-axis configuration consisting of the vario*SCAN* II, an XY scan system and possibly an objective in conjunction with a correction file, SCANLAB will provide a data sheet listing that configuration's optical properties.
- Furthermore, you will receive the Application Note "Calibrating a 3-Axis Laser Scan System" from SCANLAB.

1.4 Manufacturer

SCANLAB GmbH

Siemensstr. 2a
82178 Puchheim
Germany

Tel. +49 (89) 800 746-0
Fax: +49 (89) 800 746-199

info@scanlab.de
www.scanlab.de

1.5 Symbols

Warnings

The warning notices in this manual are indicated by a symbol and set against a gray background. The notices are accompanied by signal words conveying the degree of hazard. To prevent accidents, injuries and material damage, always comply with these notices.

Danger!

... indicates a possibly dangerous situation that could result in death or injuries if not avoided.

Caution!

... indicates a possibly dangerous situation that could result in material and environmental damage if not avoided.

Tips and Recommendations

Note

... highlights useful tips and recommendations, as well as information for efficient and trouble-free operation.

1.6 Product Overview

1.6.1 Application

The vario*SCAN* II is designed for use in a laser scan system. It enables the laser beam to be focused and the laser spot to be moved quickly and precisely along the optical axis. It thereby supplements an XY scan system (scan head or scan module) to form a 3-axis scan system.

The vario*SCAN* II's optical parameters are optimized for a specific scan system configuration and designed either for use with an objective or for use without an objective(1). Depending on the optical configuration of the complete laser scan system, the vario*SCAN* II serves to maintain the laser focus in a planar target area and/or to shift the laser focus within the working volume in the Z-direction for 3D applications.

1.6.2 Components

The vario*SCAN* II consists of a dynamic focusing unit (motorblock with diverging optic, optional water-cooled entrance aperture and objective) and a suitable servo control board. These two components together form a functional unit.

The following two variants are available:

(1) The vario*SCAN* II supplied with a separate servo control board.

(2) The vario*SCAN* II supplied with an electronic box containing the servo control board and a digital interface board. The box protects the electronic boards from moisture, dust and corrosive vapors, as well as damage due to mechanical stress.

servo The supplied components and technical specifications of your vario*SCAN* II are described in Part 2 – Specific Description.

(1) Part 1 of the manual describes the vario$SCAN_{de}$ II 20i, typically without differentiating between optical implementation for use with an objective (vario$SCAN_{de}$ II 20i FT) or without an objective (vario$SCAN_{de}$ II 20i PR). Reference to the respective implementation is only discussed where necessary.
Part 2 of the manual describes the supplied system's specific characteristics.

1.7 Unpacking and Scope of Delivery

Unpack the delivered package as follows:

Caution!

- When unpacking the package contents, handle all parts with care.
- Follow ESD guidelines when handling the electrostatically sensitive servo control boards.

- Carefully remove the vario*SCAN* II and its servo control board or electronic box from the packaging.
- Protect the vario*SCAN* II and its electronic components from dust and other contaminants.
- Keep the packaging the vario*SCAN* II and electronic components were delivered in, so that they can be properly repacked and returned to SCANLAB in case of repair.
  The electronic components must always be included, because the vario*SCAN* II and servo control board form a functional unit.
- Check that all parts have been delivered. The package includes:
  - the vario*SCAN* II,
  - a separate DSCB digital servo control board
  - or an electronic box (with integrated servo control board and digital interface board),
  - this operating manual.

For digitally controlling the vario*SCAN* II, a digital interface board, an RTC control board and suitable data cables may also be included. Refer to the corresponding packing list.

2 Safety During Installation and Operation

The safety and warning notices in this manual are indicated by a symbol set against a gray background (see chapter 1.5 on page 7).

To reduce the risk of injury, observe the following guidelines.

2.1 Guidelines and Standards

When operating the vario*SCAN* II, the following guidelines and standards should be followed:

- 2006/42/EG
  Machinery Directive
- 2014/30/EU
  Electromagnetic Compatibility (EMC)
- 2014/35/EU
  Low Voltage Directive
- DIN EN ISO 11553-1 (2009)
  Safety of Machinery – Laser Processing Machines – Part 1: General Safety Requirements
- EN 60204-1 (2006)
  Safety of Machinery – Electrical Equipments of Machines, Part 1: General Requirements
- EN 60825-1 / VDE 0837 (2015)
  Safety of Laser Products, Part 1: Equipment Classification, Requirements and User's Guide
- EN 60825-4 / VDE 0837 (2011)
  Safety of Laser Products, Part 4: Laser Guards

It is the system integrator's and operator's responsibility to determine which of the listed guidelines and standards are relevant. Additional requirements may apply via regional guidelines and standards or due to specific applications and environmental conditions.

2.1.1 Conformity to EC Guidelines for Electromagnetic Compatibility (EMC)

The vario*SCAN* II is supplied as an OEM component intended for installation in a machine (usually a laser system). The vario*SCAN* II must not be put into operation until it has been installed in a machine that complies with the provisions of all applicable directives and standards.

Neither the vario*SCAN* II nor its servo control board (nor an optionally supplied interface board) are shielded against electromagnetic fields. This also applies if the cards are installed in SCANLAB's electronic box.

After installing the vario*SCAN* II, the manufacturer of the entire system must ensure that electromagnetic compatibility is maintained, for example by:

- attaching shielding or plates
- installing the vario*SCAN* II (incl. servo control board and optional interface board or optional) in an EMC-compatible housing
- servo control using EMC-compliant cabling to electrically connect the vario*SCAN* II
- assessing the overall system to establish conformity with relevant technical requirements and applicable EMC directives.

Note:

If the vario*SCAN* II is used **without** structural measures for shielding against electromagnetic fields, then SCANLAB views this as an impermissible installation or application situation within the meaning of the protective goals of the EU's EMC Directive.

2.1.2 Complying with Relevant Standards for the CE Label

The vario*SCAN* II is delivered as an OEM component conceived of for integration into a laser scan system.

The system manufacturer bears the responsibility for complying with the standards and guidelines required for equipment usage and for the CE label.

2.2 Electrical Safety

Danger!

Personal injury due to electric shock caused by capacitors!

Possible residual charges in capacitors as well as contact between supply pins can lead to electric shock.

- After switching off, do not connect the pins for approx. 1 minute and wait.

Power is furnished to the vario*SCAN* II by a low voltage power supply. The power supply unit must meet the following mains insulation requirements:

- If the connectors are covered and cannot be reached without tools from the outside, single insulation between the mains and the low voltage circuit is sufficient. The mains insulation must be able to withstand a test voltage of 2 kV AC applied between the mains and the low voltage circuit.
- If the connectors for low voltage signals can be reached from the outside, then double or reinforced insulation between the mains and the low voltage circuit is necessary. The mains insulation must be able to withstand a test voltage of 4 kV AC applied between the mains and the low voltage circuit.

Additional application-dependent guidelines and standards may apply.

2.3 Laser Safety

The vario*SCAN* II is designed to provide variable focusing of a laser beam. Because the vario*SCAN* II is typically used with a laser, all relevant rules and regulations for safe operation of lasers must be known and applied before installing it. Since SCANLAB has no influence over the employed laser or the overall system, the customer is solely responsible for laser safety.

Danger!

- Safety regulations may differ from country to country. The customer bears sole responsibility for compliance with all applicable safety regulations of their respective regulatory jurisdiction.

Follow the instructions for laser safety provided in the "Safety During Installation and Operation" chapter of your SCANLAB XY scan system manual.

Danger!

Personal injury due to burns/ blindness caused by laser radiation from the !

During normal operation and during maintenance, servicing and adjustment of the

- Wear laser safety glasses.
- Do not stay in the area of the beam cone.
- Do not look into the laser beam or the scattered radiation.
- Keep body parts away from direct laser beam or scattered radiation and protect them.
- Before entering the , switch off the laser beam or block it with an shutter.

Danger!

- Routine maintenance should be performed as described in "Periodic Inspection and Cleaning of the Objective" on page 65 and all safety instructions should be observed.
- Adjust the output beam path by means of a laser with a laser class not higher than 2.
- The risk of hazardous deflected radiation can increase when optical instruments are used in combination with the scan system.
- Before inspecting the vario*SCAN* II, make absolutely sure that the laser and the vario*SCAN* II are turned off.
- Follow all applicable accident prevention regulations, particularly *BGV B2* "Laser Radiation".
- Always turn on the controlling PC and power to the vario*SCAN* II first before turning on the laser. Otherwise, the laser beam might be deflected and focused to an arbitrary position.

Maintenance

During maintenance of the laser equipment, the class of the laser can temporarily increase. Therefore, the customer must take suitable protective measures.

Warning Symbol

The area where laser radiation may occur must be marked with a warning symbol indicating the class of the employed laser – in accordance with *BGV B2* and *BGV A8* laser safety requirements. Additionally, warning symbols should be placed at the beam exit The table on page 12 shows appropriate warning symbols for the various laser classes specified by DIN EN 60825-1 (or VDE 0837 T1 / IEC 60825-1) "Safety of Laser Products".

Labels for Laser Classes Specified by DIN EN 60825-1 (or VDE 0837 T1 / IEC 60825-1)

Visible Laser Radiation	Invisible Laser Radiation	Potential Hazards
LASER CLASS 1	LASER CLASS 1	Class 1: The accessible laser radiation is not harmful; is eye-safe.
 LASER RADIATION DO NOT STARE DIRECTLY INTO THE BEAM WITH OPTICAL INSTRUMENTS LASER CLASS 1 M	 INVISIBLE LASER RADIATION DO NOT STARE DIRECTLY INTO THE BEAM WITH OPTICAL INSTRUMENTS LASER CLASS 1 M	Class 1 M: The accessible laser radiation is harmful to the eyes if optical instruments are used to reduce the cross section of the laser beam. If this is not the case, this laser radiation is not harmful; is eye-safe.
 LASER RADIATION DO NOT STARE DIRECTLY INTO THE BEAM LASER CLASS 2		Class 2: The accessible laser radiation is only in the visible spectrum of 400 to 700 nm. Exposure to this radiation for less than 0.25 s is not harmful to the eyes. It is eye-safe due to the eye's natural aversion response and blink reflex
 LASER RADIATION DO NOT STARE DIRECTLY INTO THE BEAM EVEN WITHOUT OPTICAL INSTRUMENTS LASER CLASS 2 M		Class 2 M: The accessible laser radiation is in the visible spectrum of 400 to 700 nm. Exposure to this radiation is harmful to the eyes if optical instruments are used to reduce the cross section of the laser beam. If this is not the case, exposure to this radiation for less than 0.25 s is not harmful to the eyes and is eye-safe due to the eye's natural aversion response and blink reflex.
 LASER RADIATION AVOID DIRECT EXPOSURE OF THE EYES LASER CLASS 3 R	 INVISIBLE LASER RADIATION AVOID EXPOSURE TO THE LASER BEAM LASER CLASS 3 R	Class 3 R: The accessible laser radiation is harmful to the eyes. Eye exposure exceeds the maximum allowable value.

Visible Laser Radiation	Invisible Laser Radiation	Potential Hazards
 LASER RADIATION AVOID EXPOSURE TO THE LASER BEAM LASER CLASS 3 B	 INVISIBLE LASER RADIATION AVOID EXPOSURE TO THE LASER BEAM LASER CLASS 3 B	Class 3 B: The accessible laser radiation is harmful to the eyes and in some cases to the skin.
 LASER RADIATION AVOID ANY EXPOSURE OF THE EYES OR THE SKIN TO DIRECT OR SCATTERED RADIATION LASER CLASS 4	 INVISIBLE LASER RADIATION AVOID ANY EXPOSURE OF THE EYES OR THE SKIN TO DIRECT OR SCATTERED RADIATION LASER CLASS 4	Class 4: The accessible laser radiation is very harmful to the eyes and skin. Stray radiation can also be dangerous. This radiation can cause fire or explosion and the generation of toxic gases or vapors.

3 Principle of Operation

3.1 Mechanical and Optical Overview

The vario*SCAN* II is an optical system with a dynamically variable focal length. It consists of the following major parts (see figure 1):

(1) motor block with a movable diverging optic and clamping surface for mounting the vario*SCAN* II

(2) objective consisting of a focus ring and a static focusing optic

(3) optional water-cooled entrance aperture (water-cooled aperture)

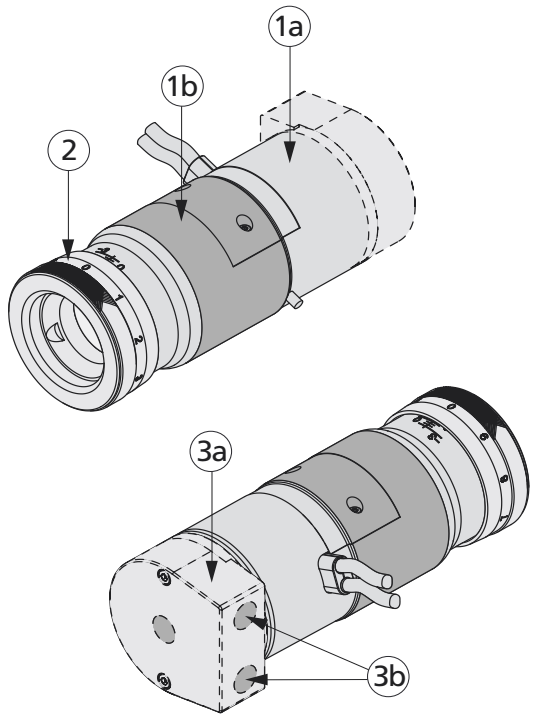

Legend

1a	Motor block	3a	water-cooled aperture
1b	Clamping surface	3b	Cooling water
2	Objective		

1

Layout of vario*SCAN* II

3.1.4 Operating Principle

The operating principle is shown in figure 2 on page 15. The entering laser beam is expanded by the movable diverging optic (a negative focal length lens). Next, the beam is collimated and focused by the objective (consisting of a lens system with positive focal length).

The vario*SCAN* II's (total) focal length, and thus also the emerging beam's divergence and convergence angles, can be varied by moving the diverging optic. This is achieved with a motor regulated by the PC controller.

SCANLAB provides a travel range in the beam direction that suits the customer's particular application by selecting optics with appropriate characteristics.

The user can fine-tune the working distance by manually turning the vario*SCAN* II's focus ring, which moves the objective lens along the optical axis of the vario*SCAN* II (see "Adjusting the Working Distance" on page 63).

For matching the vario*SCAN* II's output beam diameter to the entrance aperture of an XY system (scan head or scan module), SCANLAB chooses an optical configuration with a suitable expansion factor (see Part 2 – Technical Specifications). Additionally, it may be necessary to place a beam expander into the beam path for this purpose (see figure 30 on page 60).

A water-cooled entrance aperture (water-cooled aperture) may be required to dissipate the heat absorbed from laser energy (see chapter 4.2 on page 25).

When mounting the vario*SCAN* II (see chapter 4.1 on page 22), only use the clamping surface indicated in figure 1.

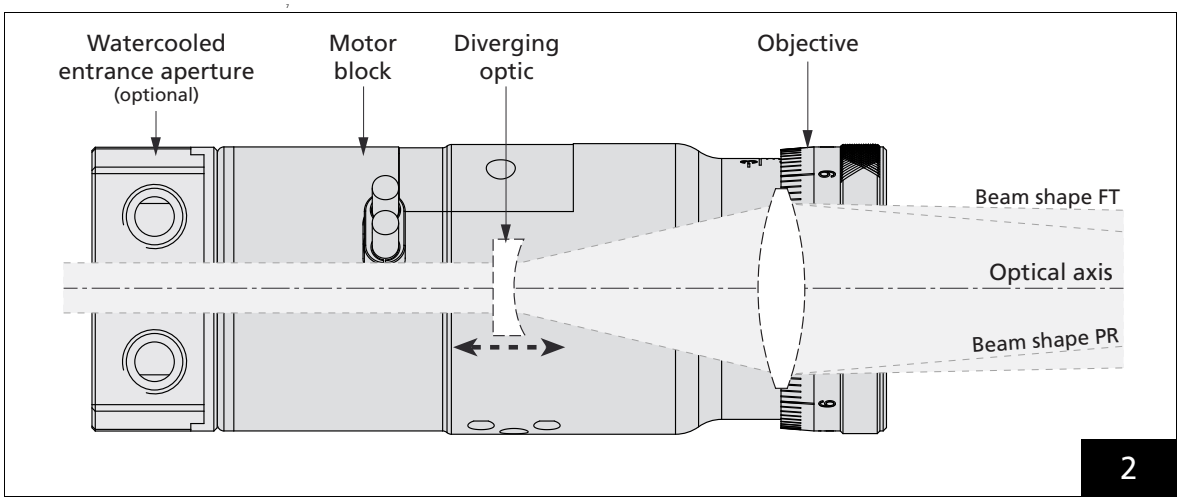

Operating principle of the vario*SCAN* II dynamic focusing system

Caution!

- Make sure that the vario*SCAN* II's aperture and optical configuration meet the requirements of your application (see Part 2 – Technical Specifications).
  For information on tolerances and deviations, contact SCANLAB.
- Make sure that the wavelength, working distance and typical image field size meet the requirements of your application. If this is not the case, then contact SCANLAB.
- Check if your input beam's wavelength, maximum beam diameter and laser power match the specifications of the vario*SCAN* II (see Part 2 – Technical Specifications).

3.2 DSCB Digital Servo Control Board

For controlling the vario*SCAN* II, a DSCB digital servo control board (see figure 11 on page 31) is included. Depending on the variant (see "Components" on page 7), the servo control board is

- included in the package
- or integrated in the supplied electronic box.

The servo control board controls the position of the diverging optic in accordance with received data and returns miscellaneous status information to the controlling PC (see "Returned Signals" on page 53).

The servo control board forms a closed servo loop in conjunction with the vario*SCAN* II's motor. Each servo control board is individually tuned by SCANLAB for its assigned motor-lens configuration.

Together with the digital servo control board and supplemented by an digital interface board and an RTC control board, the vario*SCAN* II can be controlled via digital signals from a controlling PC (see "Position Control" on page 51).

3.2.1 Configuring the Servo and Start Behavior (i*DRIVE* Functions)

The vario*SCAN* II's digital servo control board allows configuration of a number of settings.

If the vario*SCAN* II is used together with an RTC4, RTC5 or RTC6 board, configuring can be realized via the command **control_command (see** RTC manual).

The user can:

- select the data types to be transmitted from the vario*SCAN* II to the RTC control board (see "Additional Data Types" on page 54)
- set a desired POSACK threshold value (see "Process Monitoring" on page 56)
- configure the vario*SCAN* II's start behavior (see "Configuring the Start Behavior" on page 56)
- perform fault diagnostics or verify intact data transfer capability (see "Fault Diagnosis and Functional Test" on page 69)

3.2.2 Internal Protective Functions

Assuring Reliable Power

For safe operation of the vario*SCAN* II, a reliable supply of power is absolutely essential. If the supply voltages deviate excessively from their specified values (30 V or 48V) or if the mechanism for switching on power does not result in symmetrical turn-on of the supply voltages, then unintended movements of the diverging optic may occur. This in turn can damage the vario*SCAN* II or the optics of the scan system and can (if the laser is on) lead to an unintended spot position.

The vario*SCAN* II's supply voltages are monitored by the digital servo electronics. If, during operation, the supply voltage falls below a minimum of approx. 25 V (e.g. due to excessively long or thin cables, a weak power supply or high loads), then the electronics disconnects the vario*SCAN* II from the power supply. To restart the vario*SCAN* II, the supply voltage problem must first be resolved and the vario*SCAN* II switched off and then restarted.

Monitoring Position Range and Proper Operation

The vario*SCAN* II has a built-in monitoring function to prevent damage to its motor or electronics when a problem occurs.

If the motor's position exceeds the allowed position range due to an operational disturbance or if the diverging optic is not moved to its set position within a certain time, then the output stage of the servo electronics will be shut down. In such situations, the vario*SCAN* II can no longer be controlled.

Danger!

If the output stage is shut down due to position range overrun or any other problem, laser power must be switched off immediately. Otherwise, serious health hazards and severe equipment damage can occur due to uncontrolled laser radiation.

3.3 System Integration

3.3.1 Integration into a 3-Axis Scan Configuration

The vario*SCAN* II is designed to supplement an XY scan system (scan head or scan module) to form a 3-axis scan configuration.

The XY scan system deflects the laser beam in the XY directions and the vario*SCAN* II or an optional scan lens focuses the beam at the desired location. During the XY scan system's scanning process, the vario*SCAN* II's diverging optic can move highly dynamically along the optical axis. Together with the stationary focusing optic, this produces a change to the system's overall focal length, synchronized with the XY system's mirrors.

vario*SCAN* II PR

The vario*SCAN* II PR can replace a flat field objective (F-Theta objective) and enable processes in a plane perpendicular to the optical axis of the XY scan system. Here, the vario*SCAN* II PR is used to focus the laser beam and maintain the laser focus in a planar target area (see figure 3).

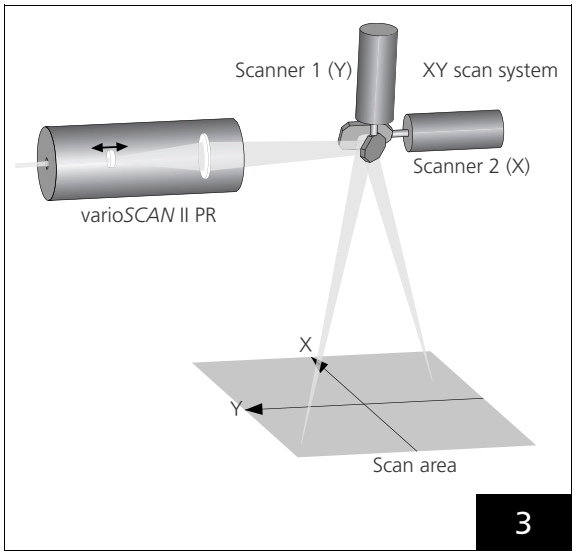

3-axis scan system with the vario*SCAN* II PR as replacement for a scan lens

The vario*SCAN* II PR can additionally be used to shift the laser spot in the Z direction within a certain working volume (i.e. to shift the working plane). It thereby transforms an XY scan system into a 3D beam deflection system and enables processing in three dimensions (see figure 4).

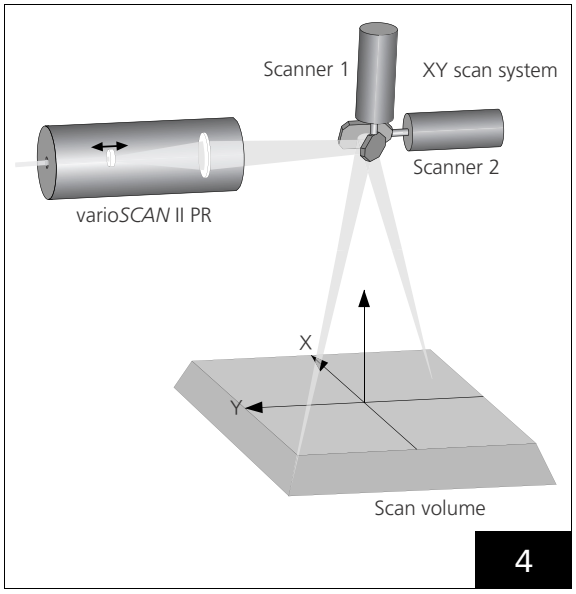

3-axis scan system with a vario*SCAN* II PR for processing a scan volume

vario*SCAN* II FT

If the XY scan system is equipped with a scan lens (e.g an F-Theta objective), then the laser beam is focused within a planar target area by the scan lens. With the vario*SCAN* II FT installed in front of the XY scan system's beam entrance, the working distance (i.e. the distance between the beam entrance and the target plane) can be varied by changing the vario*SCAN* II's focal length (see figure 5).

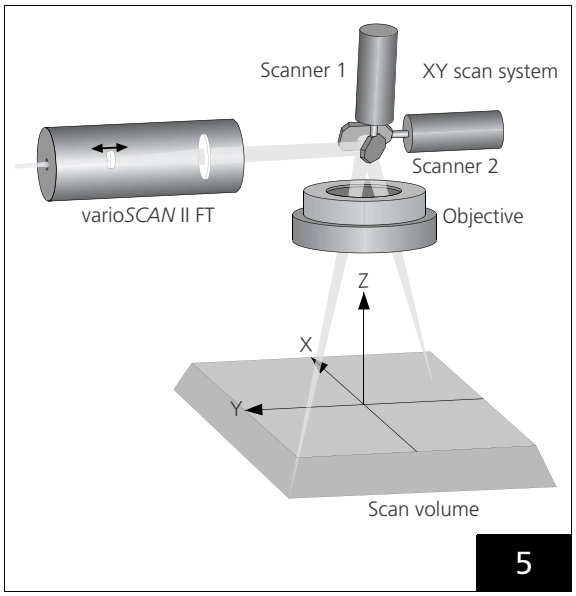

3-axis scan system with a vario*SCAN* II FT and a scan lens (objective) for processing a scan volume

SCANLAB offers optical configurations for a wide variety of working distances, image field sizes, ranges of achievable focal lengths, beam diameters, wavelengths and laser powers to optimally tune the system to the customer's particular application. Thus, a maximized image field size is achieved with the minimum spot size.

Every vario*SCAN* II is optimized for a specific scan system configuration. The technical specifications of this product are described in Part 2 of the manual. A separately supplied data sheet covers the characteristics of the 3-axis scan configuration.

Control and Power Supply

Most laser systems require the vario*SCAN* II and the complete 3-axis scan configuration to be controllable from a controlling PC via digital data transfer. For this purpose, the vario*SCAN* II and its DSCB servo control board must be supplemented by a SCANLAB digital interface board and a SCANLAB RTC control board (see figure 6):

- The interface board must be connected to the vario*SCAN* II's DSCB servo control board and provides a digital interface to be connected to an RTC board.
- The RTC control board is designed for simultaneous and real-time control of the vario*SCAN* II, the XY scan system and additional components (laser and peripheral equipment). Easy software commands enable the laser spot to be moved to the desired point in the target plane or scan volume.

The vario*SCAN* II and the XY scan system are typically separately supplied with power.

The vario*SCAN* II is usually controlled by an interface card separate from the XY scan system. Available SCANLAB interface boards are listed on page 19. Available SCANLAB RTC control boards are listed on page 20. Data transfer between the controlling PC and the vario*SCAN* II is explained on page 51.

An appropriate electronic box is available from SCANLAB for integrating a separate digital interface board and the vario*SCAN* II's DSCB board (see page 35).

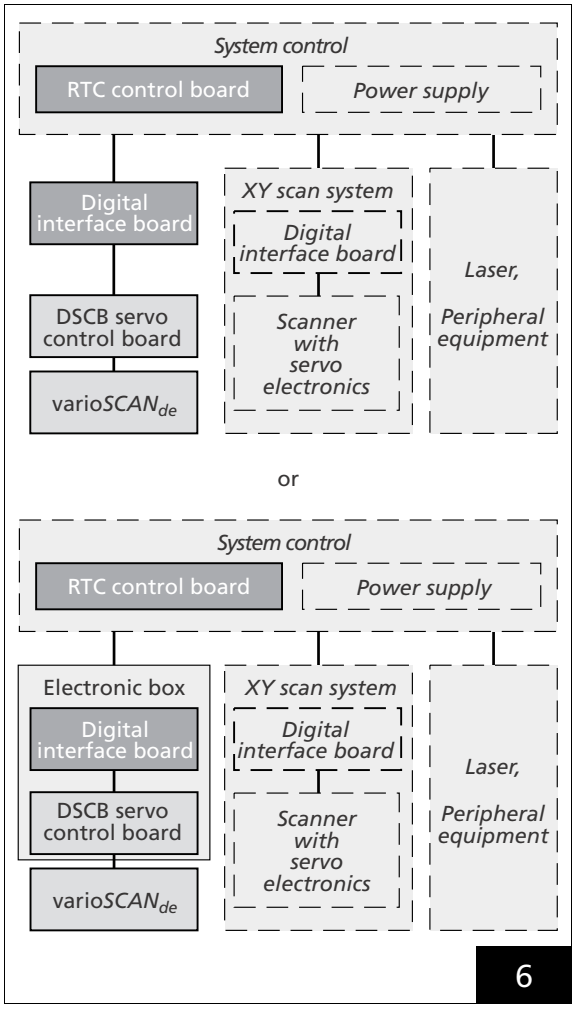

Digital control of the vario*SCAN* II – schematic diagram

3.3.2 Digital Interface Boards

The following table shows the digital interface boards available from SCANLAB for this vario*SCAN* II:

Interface board	Digital interface type	Position control resolution
DSIB	XY2-100 Enhanced	16 bit
DSIB-SL	SL2-100	16 bit (up to 20 bit for the XY scan system)

The interface boards have different digital interfaces matched to the corresponding interfaces of the various SCANLAB RTC control boards. Data transfer is electrical. The interface boards support different position control resolutions.

The vario*SCAN* II and the XY scan system will each need their own interface boards. Both interface boards have to be connected via separate data cables to the RTC control board (which has two scan head connectors).

With all SCANLAB scan systems, the vario*SCAN* II always requires its own power supply.

An appropriate electronic box is available from SCANLAB for integrating a separate interface board and the vario*SCAN* II's DSCB board (see page 35).

3.3.3 RTC Control Boards

The following table shows the RTC control boards available from SCANLAB:

RTC board	3-axis support (with enabled 3D option)	Supported interface board	Digital interface type	i*DRIVE* support
– RTC4 PCIe[1] – RTC4 Ethernet[1]	X and Y via one scan head connector, Z via the other scan head connector	DSIB	XY2-100 Enhanced	restricted (fewer i*DRIVE*-commands than with the RTC5 board)
– RTC5 PCI[1] – RTC5 PCIe – RTC6 PCIe	X and Y via one scan head connector, Z via the other scan head connector	DSIB-SL	SL2-100	full
		or DSIB and XY2-100 converter	XY2-100 Enhanced	restricted (fewer readout functions than with the DSIB-SL board)
– RTC6 Ethernet	one scan head connector: X and Y via pins 01-10, Z via pins 11-20	DSIB-SL	SL2-100	full
		or DSIB and XY2-100 converter	XY2-100 Enhanced	restricted (fewer readout functions than with the DSIB-SL board

(1) The rest of this manual doesn't distinguish between the PCI, PCIe or Ethernet bus interfaces if it has no relevance for the vario*SCAN* II's functions. In cases where differentiation is required, the bus interface will be mentioned.

RTC PCI and PCIe control boards must be installed in a Windows-compatible PC having a PCI or PCIe bus interface (e.g. inserted in a PC slot). RTC Ethernet boards are designed for operation without requiring a PC.

For controlling a vario*SCAN* II, the RTC's 3D option must be enabled. With the 3D option enabled, all RTC boards provide data transfer for all three axes of a 3-axis scan system.

All RTC4 and RTC5 boards and RTC6 PCIe boards provide two scan head connectors The RTC6 Ethernet board has only one connector. Data transfer to the axes occurs via the following connectors:

- **RTC4 PCIe and RTC4 Ethernet boards**:
  From the primary scan head connector via an interface board to the X and Y axes, and from the 2nd scan head connector via a second interface board to the Z axis.
  The "second scan head" option must be enabled.
- **RTC5 PCI, RTC5 PCIe and RTC6 PCIe Boards**:
  From the primary scan head connector via an interface board to the X and Y axes, and from the 2nd scan head connector via a second interface to the Z axis.
  (The "second scan head" option must *not* be enabled.)
- **RTC6 Ethernet Board:**
  Starting from the common scan head connector for all axes (X, Y and Z), then through a Y dividing cable[1] and via two separate interface boards to the X, Y and Z axes.
  (The "second scan head" option must *not* be enabled.)

(1) The Y cable is available from SCANLAB:
Art.-No. 116050; BG-Cable RTC5 PC104 Scan head 1 and 2
(Length = 0.18 m)

The table on page 20 also shows what interface boards can be combined with which RTC control boards. For the various combinations, it also shows the degree of i*DRIVE* support, which is relevant for the vario*SCAN* II and the intelli*SCAN* and excelli*SCAN* scan systems from SCANLAB. Here i*DRIVE* functions allow configuring the servo and start behavior or performing extended diagnostics of the system's operational state (for details, see the section "Configuring the Servo and Start Behavior (iDRIVE Functions)" on page 16 and the corresponding manuals).

4 Installation

4.1 Installing the vario*SCAN* II

Note:

When installing the system, note the differing cable lengths between components (see "Electrical Connections" on page 37).

The vario*SCAN* II is freely installable in any position (e.g. horizontally, vertically or inclined) – there are no limitations to orientation. Likewise, there are no limitations regarding rotation about its longitudinal axis – i.e. there is no up or down.

The vario*SCAN* II must be mounted via its clamping surface (see figure 1 on page 14) into a clamping block. The clamping block surface's diameter is Ø 44_{h6} mm (see figure 7).

For simplified longitudinal positioning of the clamping block, the vario*SCAN* II's housing has a 3^{H7} alignment bore hole to accommodate the supplied alignment pin. It then serves as a stop at the end of the clamping surface.

Caution!

Glue the alignment pin in place to prevent it from falling out.

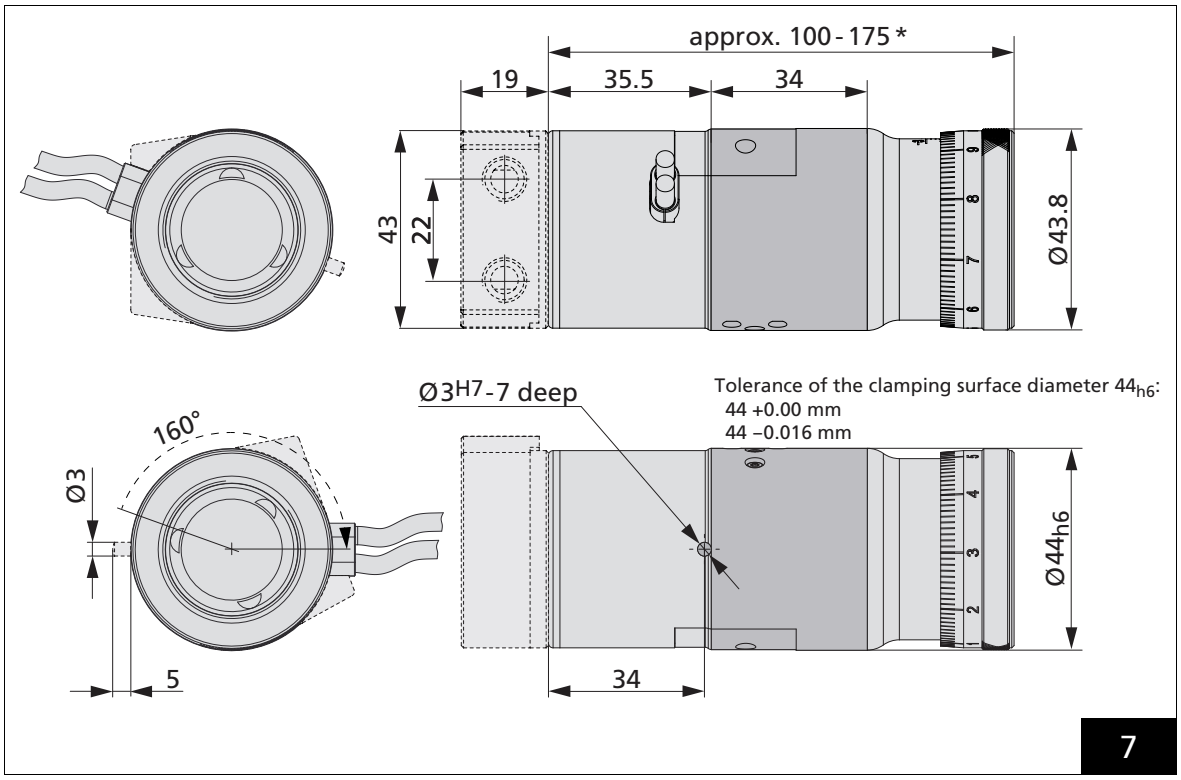

Dimensions of the vario*SCAN* II (all dimensions in mm)

* Depending on optics version; the exact length of your vario*SCAN* II is listed in Part 2 – Specific Description. Note that the total length doesn't include the length of the optional water-cooled aperture.

The customer must provide a suitable fixture (clamping block) for installation of the vario*SCAN* II that ensures that the vario*SCAN* II is correctly positioned and stably attached in the laser scan system. SCANLAB recommends a divided or slotted clamping block. A divided clamping block is shown in figure 8. The entire clamping surface should be enclosed by the clamping block, i.e. the bore hole diameter of the clamping block should be identical with the diameter of the clamping surface (44^{H6}), and the depth of the clamping surface should be 34 mm.

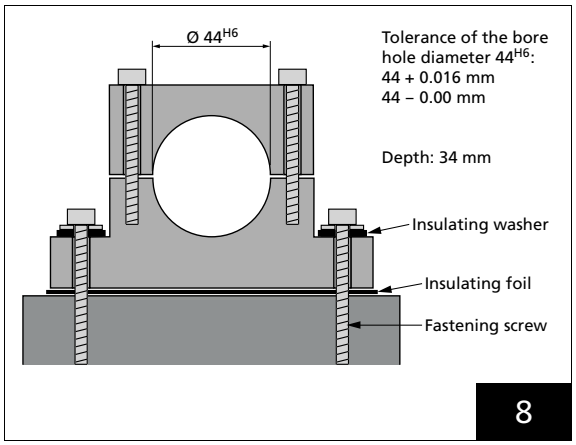

Recommended clamping block – cross section

Caution!

- When designing or providing the clamping block, observe chapter 7.5 on page 62, especially the recommended tolerances for the beam position.
- The clamping block must be mounted firmly onto a sufficiently stable support.
  If the clamping block is not fastened with sufficient firmness, this can lead to vibrations of the vario*SCAN* II, which might result in marking process inaccuracies.

To prevent the temperature of the vario*SCAN* II from rising excessively, the clamping block should be constructed of aluminum or another material with similar thermal conductivity. Under some operating conditions, it could be appropriate to use a water cooled clamping block (see chapter 4.2 on page 25).

The vario*SCAN* II must be electrically insulated to ensure reliable operation. SCANLAB recommends using one of the two following options:

- An electrically non-conductive foil sheet is placed between the clamping block and the support (see figure 8).
- Or the surfaces of the clamping block are galvanically processed in such a way that electrical isolation is automatically provided. Care must be taken to ensure the tolerance of the bore hole diameter (see figure 8).

The attachment of the clamping block to the support with screws must also be electrically non-conductive. Insulating washers must be fitted between the fastening screws and the clamping block for this purpose. But care must be taken that heat transfer is still achieved.

Furthermore, the alignment pin, which serves as a stop (see page 22), must also not be electrically conductive. For this reason, the dowel pin supplied is made of plastic.

The clamping force applied to the vario*SCAN* II's clamping surface should be 10 kN (±2 kN).

Caution!

A larger clamping force tolerance may introduce dynamic deviations compared to the system calibration.

To convert clamping force into tightening torque for divided or slotted clamping, you can use the following formulas (see figure 9):

Note:

For a different type of clamping construction, you'll need to devise your own calculation method.

Divided clamping

$$M_A = 10 \cdot \frac{P}{n}$$

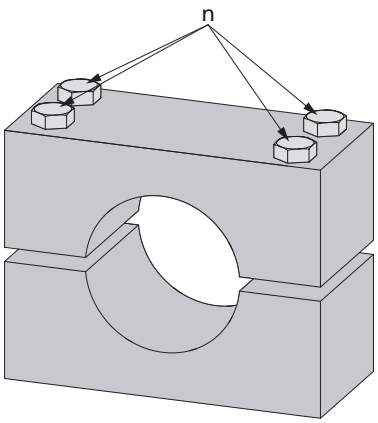

Slotted clamping

$$M_A = 12.7 \cdot \frac{L_1 \cdot P}{L_2 \cdot n}$$

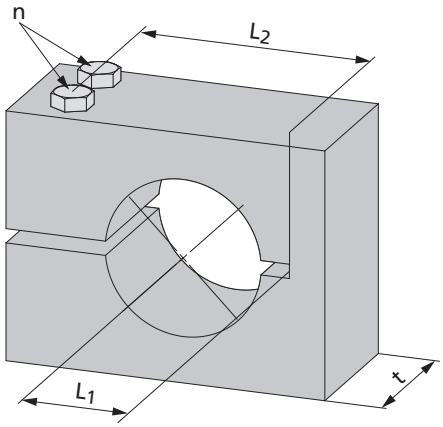

Legend

M_A	Tightening torque [Nm]
P	Screw thread pitch [mm]
n	Number of screws
L_1	Slot spacing – gap midpoint [mm]
L_2	Slot spacing – screw midpoint [mm]
t	vario*SCAN* II clamping surface depth (±3 mm)

9

Calculation of tightening torque

To mount the vario*SCAN* II, proceed as follows:

Caution!

- The vario*SCAN* II must not be opened.
- Before mounting the vario*SCAN* II, cover its beam entrance and exit to protect the optical components from contamination during the mounting process.
- To attach the vario*SCAN* II, use only the clamping surface shown in figure 1 on page 14. Other parts of the vario*SCAN* II must not be used for mounting.
- Apply the correct clamping force (for conversion into tightening torque, see figure 9 on page 24). To tighten the screws, use a torque wrench.
- Ensure that the vario*SCAN* II or clamping block is electrically insulated.

- If you require a stop, then insert the supplied alignment pin into the alignment bore hole (3^{H7}) of the vario*SCAN* II housing (see figure 7 on page 22) and glue it in place.
- Insert the vario*SCAN* II into the clamping block, up to the stop if present.
- Fasten the vario*SCAN* II by tightening the clamping block's screw(s) with the correct tightening torque.
- If necessary, also tighten the clamping block.

4.1.1

4.2 Water Cooling (optional)

Caution!

Material damage due to live malfunction of the water cooling system

Leakage of the water cooling system can lead to voltage increase with the electronics in the optics compartment.

- The use of couplings with automatic shut-off valves is recommended for the connection of the water cooling system

The vario*SCAN* II can be optionally equipped with a water-cooled entrance aperture (water-cooled aperture, see figure 10 on page 27). This water-cooled aperture is used to dissipate the heat that is absorbed from the laser energy at the beam entrance. (The maximum allowed laser power is specified in Part 2 – Specific Description.) Whether water cooling is required will depend on various process conditions.

SCANLAB recommends determining in test operation whether the vario*SCAN* II must be operated with water cooling. In doing so, suitable operating parameters can be determined. For this purpose, the scan system should be operated over a longer period of time with realistic operating conditions (scan dynamics, laser power, ambient conditions).
During the test operation, the TempOK and PowerOK status signals of the scan system should be read out (see page 53) to check whether the scan system overheats during operation or whether the scan system is switched off in an emergency (e.g. due to overheating). The guide values from the cooling specifications can be used as start values for the operating parameters of the water cooling (see "Technical specifications" in the manual Part 2 - Specific description).

Depending on the application, it may also be necessary to use a water-cooled clamping block to cool the motor block of the vario*SCAN* II. This is necessary if the temperature at the clamping surface exceeds 60°

C or if the average electrical power consumption exceeds the value of 26 W[1]. The terminal block (see page 23) should then be designed with water cooling.

Caution!

- Do not operate the vario*SCAN* II with a laser power and beam power density exceeding the specified maximum values (see "Technical Specifications" in Part 2 – Specific Description).
- To avoid system damage, the user is asked to check the current consumption and the temperature in new applications:
  The current consumption of the DSCB servo control board must not exceed a value of 0.85 A RMS (26 W).
- Additional cooling of the motor block may be required for particularly intensive use. For this purpose, SCANLAB recommends the use of a water-cooled clamping block.
- Do not exceed the maximum water pressure of 4 bar. The water supply should be adjustable. SCANLAB recommends a water inlet temperature of 20–25 °C, constant to ±0.5 k.
- To ensure sufficient cooling, the water flow should be monitored continuously during operation.

(1) The power consumption refers to the entire system, i.e. the focusing unit and the servo control board.

4.2.1 Water-cooled aperture (optional)

If required, the vario*SCAN* II must be equipped with a water-cooled aperture (see page 25)[1]. If the water-cooled aperture was delivered unassembled, it must be mounted on the vario*SCAN* II's beam entrance side. You can choose the installation position freely, i.e. offset by 180°. Proceed as follows:

- Position the water-cooled aperture (see (2) in figure 10) onto the vario*SCAN* II's (1) beam entrance side such that the water-cooled aperture's through-holes line up with the threaded bore holes of the vario*SCAN* II.
- Tighten the water-cooled aperture with the supplied Torx screws (3) with a Torx wrench (T8) to a torque of 80 Ncm.
- Screw suitable hose connectors into the water-cooled aperture's G1/8-threaded bore holes (see "Connecting to a Cooling System" on page 29).

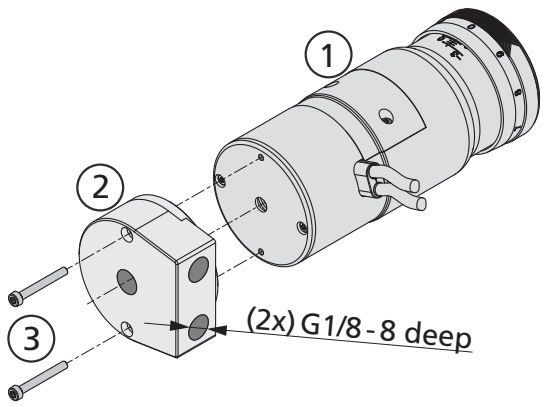

Legend

1 vario*SCAN* II
2 water-cooled aperture
3 Torx screws M2.5x20

10

Mounting the optional water-cooled aperture

(1) A suitable water-cooled aperture is available from SCANLAB: Art.-No. 144962; BG-Cooling-Stop-20; VS II 20; Alu

4.2.2 Selecting an Appropriate Water Cooling System

When selecting water-cooling components, observe the "Cooling Water Specifications (optional)" on page 71, and in addition the following recommendations:

- The water coolant's flow rate, pressure and temperature should be appropriately adjustable at the chiller and monitored during operation.
- All cooling system components of the entire cooling circuit (cooling channels of the chiller and vario*SCAN* II, coolant lines and connectors, coolant) must be material-compatible to prevent corrosion-induced leaks in the cooling circuit. In particular, don't combine metals that create an electrochemical voltage series. The coolant-wetted metal parts and materials inside the vario*SCAN* II are type-dependent of aluminum alloy or stainless steel. Please refer to the manual Part 2 – Specific Description to find out what material the coolant-wetted parts of your vario*SCAN* II are made of.

Note:

If the vario*SCAN* II is used in conjunction with an XY scan system, then refer to its user manual for coolant specifications and installation instructions.

- Flexible, UV-resistant, opaque plastic hoses with an internal diameter of at least 4 mm are suitable as coolant lines between the chiller and vario*SCAN* II. Materials such as polyamide, EPDM, NBR or PVC-U are appropriate, possibly stainless steel too (depending on the other used materials), but **not** zinc-plated steel piping, rubber, copper or soft PVC. Ensure that the coolant lines have a nominal pressure rating of PN10 or higher and are installed kink-free.
- Even if the laser equipment already has a cooling system (e.g. for laser cooling) of sufficient capacity to also cool the vario*SCAN* II and an XY scan system, SCANLAB strongly recommends not using that cooling system for the XY scan system, too, without conducting tests. Here, consultation with the existing cooling system's (or laser's)

manufacturer is absolutely necessary. Scan system cooling can sometimes be achieved by adding a heat exchanger and a separate cooling circuit to the existing cooling system. Here, too, attention must be paid to material compatibility in the cooling circuit (see above).

To obtain advice on suitable cooling systems, refer to the information in "Cooling Water Specifications (optional)" on page 71 when contacting cooling system manufacturers (e.g. RIEDEL, Termotek AG, Thermo Fisher Scientific, DELTATHERM Hirmer GmbH, H.I.B Systemtechnik GmbH or SCHWÄMMLE GmbH: www.riedel-cooling.com, www.termotek-ag.com, www.thermofisher.com, www.deltatherm.de, www.h-i-b.de, www.schwaemmle-gmbh.de).

4.2.3 Coolants

SCANLAB recommends demineralized water as the coolant, supplemented with a corrosion inhibitor and a biocidal additive. For example, the NALCO Yelmet Kit in conjunction with demineralized water is manufacturer-specified for conductance < 20 μS/cm and water hardness < 5 mg/l $CaCO_3$ to offer effective protection against corrosion for stainless steel, copper, non-ferrous metals and aluminum as well as protection against bacteria, algae and fungi. The NALCO Yelmet Kit's organic corrosion inhibitor promotes rapid formation of an anti-corrosive film.

The coolant's quality needs to be checked at regular intervals. It might be necessary to periodically replace the coolant. Establish suitable maintenance intervals.

Caution!

- An unsuitable coolant can produce blockage or corrosion of the cooling channels.

Caution!

- If, contrary to the above recommendations, ordinary tap water is used as coolant, then formation of lime and scale deposits can be expected (depending on the water's hardness and pH), along with increased galvanic corrosion. Furthermore, bacteria, algae and fungi can multiply. Water with excessive chloride will promote strong corrosion of stainless steel and non-ferrous metals, too. Increased corrosion can also be caused by ions of copper and other heavy metals.
- Depending on the used materials (e.g. aluminum or copper), deionized water with low conductance (and without corrosion inhibitors) can also encourage excessive corrosion. Deionized water without corrosion inhibitors should ideally be used only with compatible materials such as stainless steel or nickel. It might be necessary to monitor and regulate the water coolant's conductance via suitable constructional measures.
- Adding a corrosion inhibitor will delay – but not prevent – galvanic corrosion. Corrosion inhibitors bind with and neutralize ions in solution. In the process, the inhibitors are consumed and must be replenished regularly.

For advice on appropriate coolants, refer to the information in "Cooling Water Specifications (optional)" on page 71) when contacting manufacturers of coolant additives (e.g. NALCO, Grünbeck or DOW Chemical Company: www.nalco.com, www.gruenbeck.de, www.dow.com).

4.2.4 Connecting to a Cooling System

To connect the vario*SCAN* II to a cooling system, you must first install suitable hose connectors at the water-cooled aperture (and at the water-cooled clamping block if necessary). For this, the cooling block provides two G1/8 threaded holes (see figure 10 on page 27).

Caution!

water-cooled aperture and coolant connectors must be material-compatible. Don't combine metals that create an electrochemical voltage series.
Please refer to the manual Part 2 – Specific Description to find out what material the coolant-wetted parts of your vario*SCAN* II are made of.

Connect the vario*SCAN* II to the cooling circuit as follows:

- Screw suitable hose connectors into the G1/8 threaded holes of the vario*SCAN* II's water-cooled aperture.
- Check the coolant hoses (with an internal diameter of at least 4 mm) for cleanliness.
- Attach the hoses to the hose connectors. Ensure that the connections are leak-free.
- If desired, install (quick-release) connectors in the hoses. Here, ensure that the distance between the vario*SCAN* II and connector is large enough to prevent water from contacting the vario*SCAN* II.
- Attach the hoses to the cooling system.
- Fill the cooling circuit with new coolant.
- Follow the advice of the cooling system and coolant manufacturers.

Caution!

- Ensure that the maximum intake pressure (see "Cooling Water Specifications (optional)" on page 71) is not exceeded and that condensation doesn't form in the vario*SCAN* II. Otherwise, damage to the vario*SCAN* II may occur.
- Water cooling should be monitored during operation to ensure sufficient cooling.
- Fully remove the coolant prior to transport or long-term storage of the vario*SCAN* II. Otherwise, damage to the vario*SCAN* II may occur. Comply with the respective safety and disposal notices.
- Some coolants can present health risks even in small quantities. Therefore make sure that the cooling block is free of coolant residue before transporting the vario*SCAN* II.

4.3 Installing the Electronic Components

Danger!

Personal injury due to cuts caused by sharp edges!

Sharp edges on electronic cards can cause cuts.

- Only touch the electronic cards at the carrier angle.

Which electronic components need to be installed and how to install them depends on the delivered items (see "Components" on page 7):

- If you received the variant with a separate DSCB digital servo control board, then refer to the section "Installing the DSCB Servo Control Board".
- If you received a separate optional digital interface board from SCANLAB, then refer to the section "Installing the Digital Interface Board (optional)" on page 33.
- If you received the variant with the electronic box, then refer to the section "Installing the Electronic Box" on page 35.

During installation, pay attention to cable lengths between the individual components (see "Electrical Connections" on page 37)

4.3.1 Installing the DSCB Servo Control Board

The separate DSCB digital servo control board must be installed separately. Figure 11 shows the dimensions of the DSCB digital servo control board as well as its input and output connectors. The board is mounted on an angle plate.

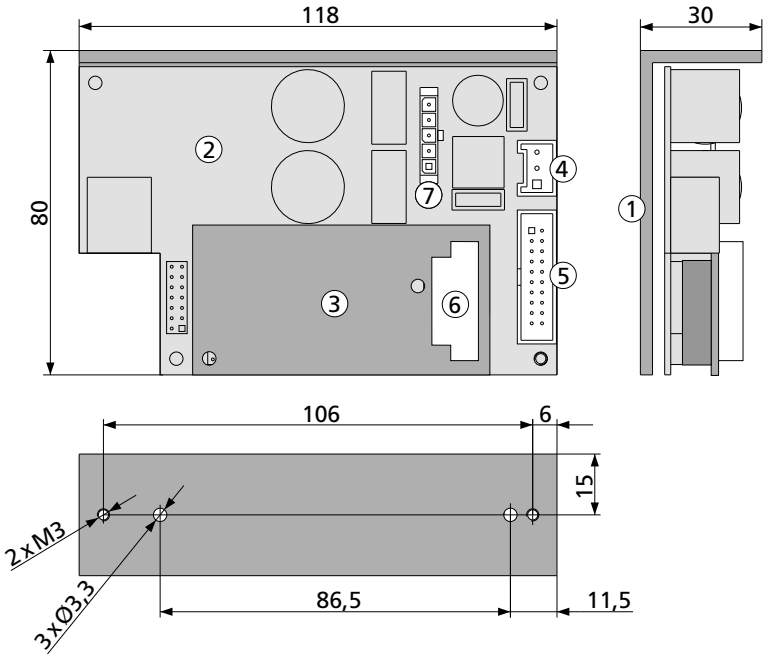

Legend

1 Angle plate
2 Board
3 Expansion PCB

Input connectors:

4 POWER IN (3-pin)
5 DIGITAL&POWER IN Data transfer and power supply (20-pin)

Output connectors:

6 vario*SCAN* II data transfer (D-Sub, 9-pin)
7 vario*SCAN* II power supply (5-pin)

11

DSCB digital servo control board (all dimensions in mm)

When installing the servo control board, observe the following:

Caution!

- To prevent damage to the board, handle it with care. Avoid applying mechanical force to the board and cables.
- Take appropriate ESD protective measures to prevent electrostatic damage to the board during installation.
- Protect the board from moisture, dust and corrosive vapors.
- Don't let the board's temperature rise excessively.
- Only use the threaded M3or Ø3.3 mm bore holes designated in figure 11 on page 31 to mount the electronics board. Other bore holes must not be used for board mounting or any other purpose.
- Make sure no conductive contact exists between the screws and the board's electronic components.

When fastening the board, observe the following:

- The angle plate's small side surface provides two M3 threaded bore holes and two Ø3.3 mm bore holes. The rear side provides three additional (M3) bore holes. Use at least two of these bore holes to fasten the board. M3 screws must be used for all bore holes. Ensure that no electrical contact exists between the screws and the board's electronic components.
- To prevent damage to the board from excessive heat, it is important to attach the board's angle plate to a heat sink or a heat-dissipating part of a housing. The material and dimensions of the heat sink must be chosen such that the temperature of the angle plate does not exceed 50 °C.
- The DSCB servo control board sensitive to the vario*SCAN* II's magnetic stray field. Therefore, the board must be installed with a minimum distance of 60 mm between its angle plate and the vario*SCAN* II (see figure 12). Otherwise, the electronics must be shielded accordingly to prevent interferences.

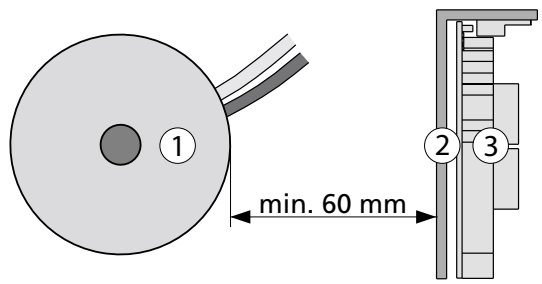

Legend

1 vario*SCAN* II
2 Angle plate
3 Board

12

Distance between vario*SCAN* II and servo control board, and between vario*SCAN* II and interface board

Fasten the servo control board as follows:

- Use M3 screws to fasten the DSCB servo control board to a heatsink or to part of a housing. Here, use the bore holes designated in figure 11 on page 31.

4.3.2 Installing the Digital Interface Board (optional)

If a separate digital interface board was included in delivery, then it must be installed separately.

Figure 13 shows the dimensions of SCANLAB's DSIB and DSIB-SL interface boards, as well as their input and output connectors. The board is mounted on an angle plate.

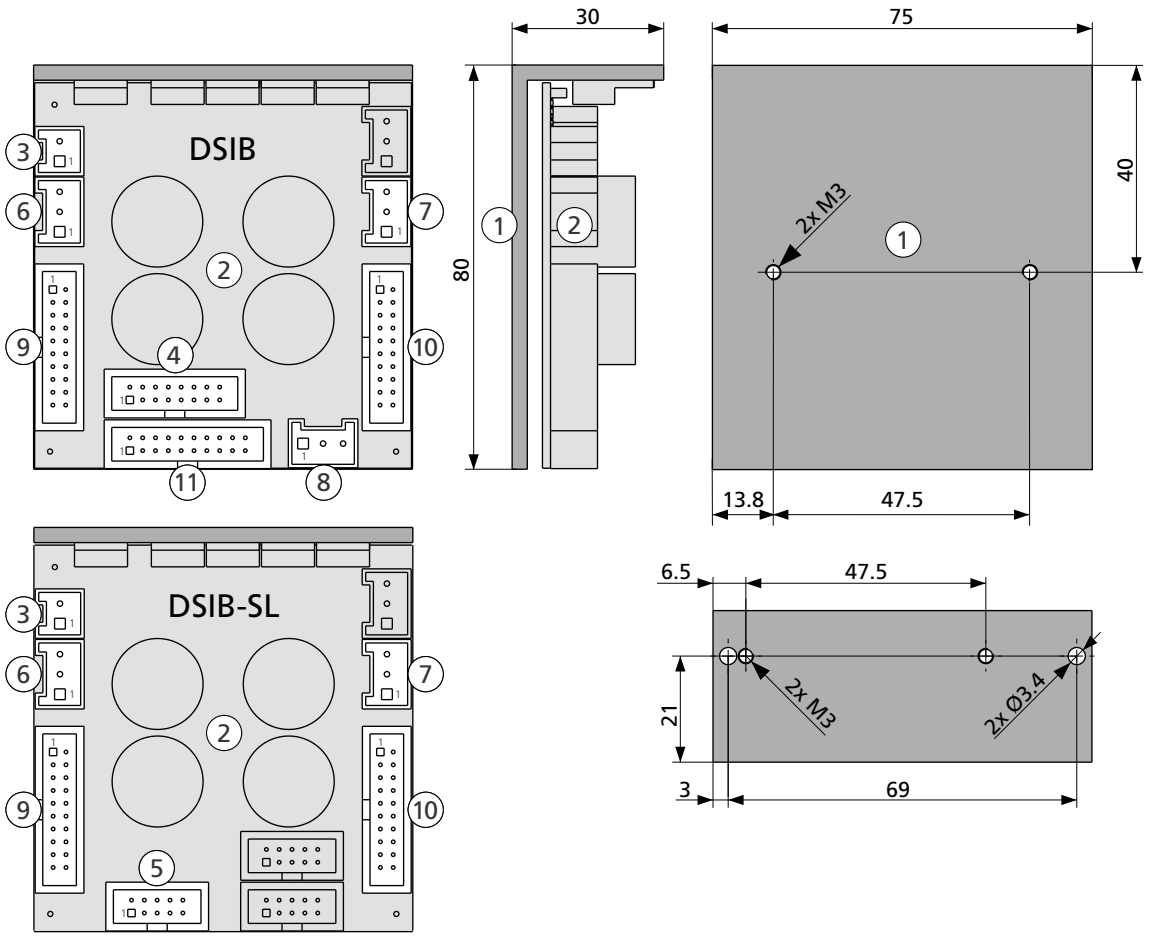

Legend

1 Angle bracket
2 Board

Input connectors:

3 POWER IN (2-pin)
4 DIGITAL IN (16-pin) – DSIB
5 DIGITAL IN (10-pin) – DSIB-SL

Output connectors:

6 POWER OUT X (3-pin)
7 POWER OUT Y (3-pin)
8 POWER OUT Z*) (3-pin) – DSIB
9 DIGITAL&POWER OUT X (20-pin)
10 DIGITAL&POWER OUT Y (20-pin)
11 DIGITAL&POWER OUT Z*) (20-pin) – DSIB

*) Only in combination with RTC4 board

13

DSIB and DSIB-SL digital interface boards (all dimensions in mm)

Observe the following when installing the interface board:

Caution!

- To prevent damage to the board, handle it with care. Avoid applying mechanical force to the board and cables.
- Take appropriate ESD protective measures to prevent electrostatic damage to the board during installation.
- Protect the board from moisture, dust and corrosive vapors.
- Don't let the board's temperature rise excessively.
- Only use the threaded M3 or Ø3.4 mm bore holes designated in figure 13 on page 33 to mount the electronics board. Other bore holes must not be used for board mounting or any other purpose.
- Make sure no conductive contact exists between the screws and the board's electronic components.

Observe the following when fastening the board:

- The angle plate's small side and rear side surfaces each provide two M3 threaded bore holes and the small side additionally provides two Ø3.4 mm bore holes (see figure 13 on page 33). Use at least two of the bore holes to fasten the board. All bore holes require M3 mounting screws. Ensure that no electrical contact exists between the screws and the board's electronic components.
- To prevent damage to the board from excessive heat, it is important to attach the board's angle plate to a heat sink or a heat-dissipating part of a housing. The material and dimension of the heat sink must be chosen such that the temperature of the angle plate does not exceed 50 °C.
- The digital interface board is sensitive to the vario*SCAN* II's magnetic stray field. Therefore, it must be installed with a minimum distance of 60 mm between the board's angle plate and the vario*SCAN* II (see figure 12 on page 32). Otherwise, the electronics must be shielded accordingly, otherwise interference may can occur.

Fasten the interface board as follows:

- Use M3 screws to fasten the interface board to a heatsink or part of a housing.
  Here, use the designated bore holes shown in figure 13 on page 33.

4.3.3 Installing the Electronic Box

The electronic box contains a pre-installed DSCB digital servo control board and an interface board.

The electronic boxoffers the following benefits:

- The boards are protected from humidity, dust and corrosive vapors, as well from damage by mechanical stress.
- The customer doesn't need to interconnect the boards.

The electronic box's housing provides connectors for the vario*SCAN* II and , see figure 14), as well as connectors for the power supply and system control. Input connectors will vary depending on the integrated interface board.

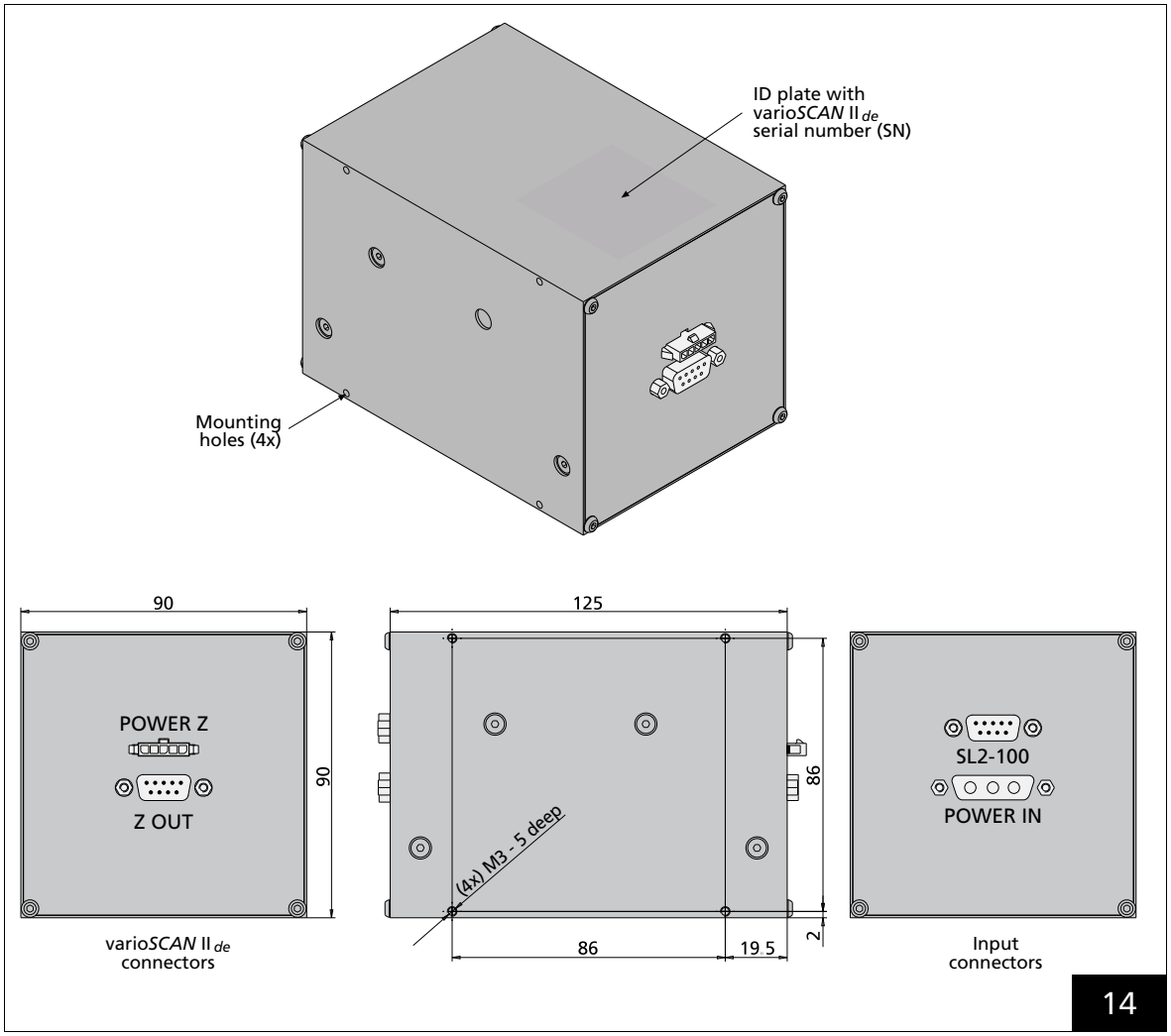

Electronic box – example
The input connectors vary depending on the supplied interface board (see chapter 29 on page 50).

Observe the following when installing the electronic box:

Caution!

- To prevent damage to the electronic box, handle it with care.
- Take appropriate ESD protective measures to prevent electrostatic damage to the electronic box during installation.
- Protect the electronic box from moisture, dust and corrosive vapors.
- Only use the threaded M3 bore holes designated in figure 14 on page 35 to mount the electronic box. Other bore holes must not be used for box mounting.
- Don't let the electronic box's temperature rise excessively.

Observe the following when fastening the electronic box:

- Four M3-threaded bore holes are provided for fastening the electronic box (see figure 14 on page 35)
- To make sure component temperatures in the electronic box do not rise excessively, it's important to attach the box to a heatsink or part of a housing. The material and dimensions of the heatsink must be chosen such that the temperature of the electronic box does not exceed 50 °C.

Fasten the electronic boxas follows:

- Use M3 screws to fasten the electronic box to a heatsink or part of a housing.
  Here, use the designated bore holes shown in figure 14 on page 35.

4.4 Operating and Storage Conditions

For operating, storing and servicing the vario*SCAN* II, make sure the following ambient conditions are met:

- The operating temperature is +25 °C ±10 °C.

Caution!

Determine whether your application requires operating the vario*SCAN* II with a water-cooled entrance aperture.
(see chapter 4.2 on page 25).

- The storage temperature range is −35 °C to +60 °C.

Caution!

Before storing or transporting the device, remove all coolant from its water-cooled parts.

- To prevent damage to the vario*SCAN* II's optical components and electronics, protect it from moisture, dust and corrosive vapors.
- Avoid electromagnetic fields and static charges. Both can damage the electronic components on the servo control and interface boards.

5 Electrical Connections

This chapter describes how the vario*SCAN* II and its DSCB servo control board can be connected to the RTC control board and to the power supply.

Caution!

Material damage due to short circuit of the !
A short circuit in the .

- Do not use highly flammable materials near to the or electronic boards

Depending on the used RTC control board and the overall 3-axis configuration, the vario*SCAN* II's DSCB servo control board can be connected to the RTC board as follows:

- via an interface board in the electronic box
  – see chapter 14 on page 35
- via a separately installed DSIB interface board
  – see chapter 5.2 on page 41
- via a separately installed DSIB-SL interface board
  – see chapter 5.3 on page 44

Important notes regarding the data cable between the interface board and RTC control board are listed in chapter 5.4 on page 47. Important notes regarding the power supply can be found in chapter 5.5 on page 49.

Note:

- For descriptions of the RTC board's electrical connections, refer to the corresponding user manuals.

5.1 Control via an Interface Board in the Electronic Box

If the vario*SCAN* II's DSCB servo control board and the SCANLAB digital interface board are integrated in SCANLAB's electronic box, then data transfer and power supply occur via this electronic box.

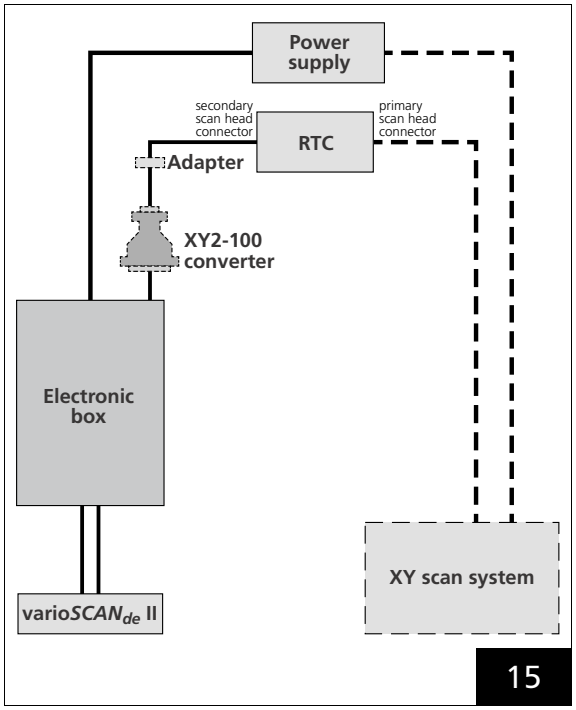

System cabling

After installing the system's individual components, connect them as described below.

Caution!

- When wiring the system, make sure none of the wires carry any voltages. All control devices must be turned off.
- Always turn off the power supply before connecting or disconnecting the power cables or data cables.
- Follow all electrical specifications exactly.

5.1.1 Connecting the vario*SCAN* II

The vario*SCAN* II and the DSCB servo control board integrated in the electronic box are one functional unit. Do not interchange the servo boards. Optimum positioning accuracy cannot be guaranteed if servo boards are interchanged. Therefore, if you received more than one servo board (or several electronic boxes), make sure the various electronic components are properly combined. To help achieve this, the identification plate of each electronic box is marked with the serial number of its assigned vario*SCAN* II (see figure 14 on page 35).

The two cables connecting the vario*SCAN* II and the DSCB board are part of the vario*SCAN* II.
The default cable length including connector is approx. 0.55 m.

Connect the vario*SCAN* II as follows:

- Connect the vario*SCAN* II to the 's - and - connector (D-Sub 9-pin resp. 5-pin) electronic box's(see figure 14 on page 35).

5.1.2 Connecting the RTC Board

The electronic box's's housing provides input connectors for system control and power (see figure 14 on page 35). These connectors vary depending on the integrated interface board (DSIB or DSIB-SL, see figure 16 on page 39).

Connecting the DSIB Board (XY2-100 Enhanced)

If SCANLAB's DSIB digital interface board is integrated in the electronic box, then the box provides a DIGITAL IN connector for electrical data transfer using the XY2-100 enhanced protocol (the 25-pin D-Sub connector's pinout is shown in figure 16 on page 39). The electronic box's XY2-100 connector can be connected:

- to an RTC4 board (with XY2-100 interface and enabled 3D and "second scan head" options)
- via an XY2-100 converter to an RTC5 or RTC6 board (with enabled 3D option)

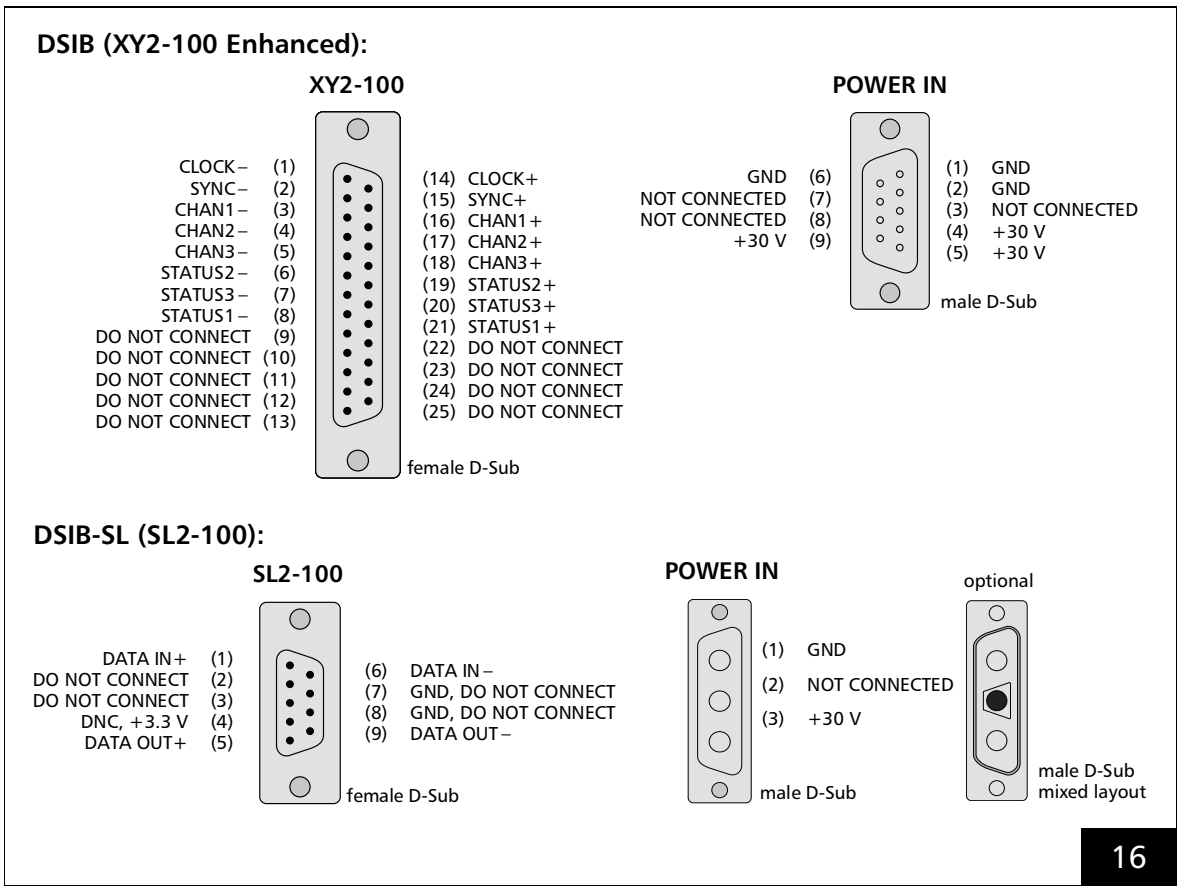

Electronic box's input connectors: pinouts
(connectors vary depending on the integrated interface board)

Suitable data cables are optionally available from SCANLAB. These data cables are equipped at both ends with 25-pin male D-Sub connectors, matching the electronic box's 25-pin XY2-100 connector and the RTC board's primary scan head connector or the XY2 converter (all 25-pin female D-Sub) (also see page 47).

Appropriate adapters (cable with slot bracket and female D-Sub connector; Y cable for the RTC6 Ethernet) are available from SCANLAB for connecting a data cable with its D-Sub connector (or a converter) to the RTC board's secondary scan head connector (which is not a D-Sub connector).

Connect the RTC board as follows:

- Connect the XY2-100 connector to a scan head connector on the RTC board using a suitable data cable.
  - Typically, the XY scan system is connected to the RTC's primary scan head connector and the varioSCAN II to the secondary scan head connector. But inverse connection is also possible. So take care to correctly assign the correction file (see page 52).
  - An XY2-100 converter is needed when connecting to an RTC5 or RTC6 board (see figure 15 on page 38).

Connecting a DSIB-SL Board (SL2-100)

If SCANLAB's DSIB digital interface board is integrated in the electronic box, then the box provides an SL2-100 connector for electrical data transfer using the SL2-100 protocol (9-pin D-Sub pinout shown in figure 16 on page 39). This electronic box connector allows connection to an RTC5 or RTC6 control board (with enabled 3D option).

Suitable data cables are optionally available from SCANLAB. These data cables are equipped at both ends with 9-pin male Sub-D connectors, matching the electronic box's's 9-pin SL2-100 connector and the RTC board's primary scan head connector (both 9-pin female Sub-D) (also see page 47).

Appropriate adapters (cable with slot bracket and D-Sub connector; Y cable for the RTC6 Ethernet) are available from SCANLAB for connecting a data cable with its D-Sub connector to the RTC board's secondary scan head connector (which is not a D-Sub connector).

Connect the RTC board as follows:

- Connect the SL2-100 connector to a scan head connector on the RTC board using a suitable data cable.

  Typically, the XY scan system is connected to the RTC's primary scan head connector and the varioSCAN II to the secondary scan head connector. But inverse connection is also possible. So take care to correctly assign the correction file (see page 52).

5.1.3 Connecting the Power Supply

The vario*SCAN* II and XY scan system must be separately supplied with power. The power supply and the data interface are galvanically isolated from each other.

Depending on the integrated interface board, the electronic box provides either a 3-pin or 9-pin male POWER IN connector for power (the D-Sub connector's pinout is shown in figure 16 on page 39).

Connect the power supply as follows:

- Connect the power supply to the electronic box's's POWER IN connector using a suitable cable.
- Exactly follow all electrical specifications in chapter 5.5 on page 49.

5.2 Control via a Separate DSIB Interface Board

SCANLAB's DSIB digital interface board provides an XY2-100 Enhanced interface for electrical data transfer. A single DSIB board enables control of up to three axes. The DSIB board can be connected to the following control boards:

- to an RTC4 control board (with XY2-100 interface, enabled 3D and "second scan head" options)
- or via an XY2-100 converter to an RTC5 or RTC6 (with enabled 3D option)

Figure 17 on page 41 shows how the following components are interconnected:

- vario*SCAN* II
- vario*SCAN* II's DSCB servo control board
- DSIB digital interface board
- RTC control board
- XY scan system
- power supply

Suitable cables and adapters are optionally available from SCANLAB. After installing the individual components, connect them as described below.

Caution!

- When wiring the system, make sure none of the wires carry any voltages. All control devices must be turned off.
- Always turn off the power supply before connecting or disconnecting the power cables or data cables.
- Follow all electrical specifications exactly.

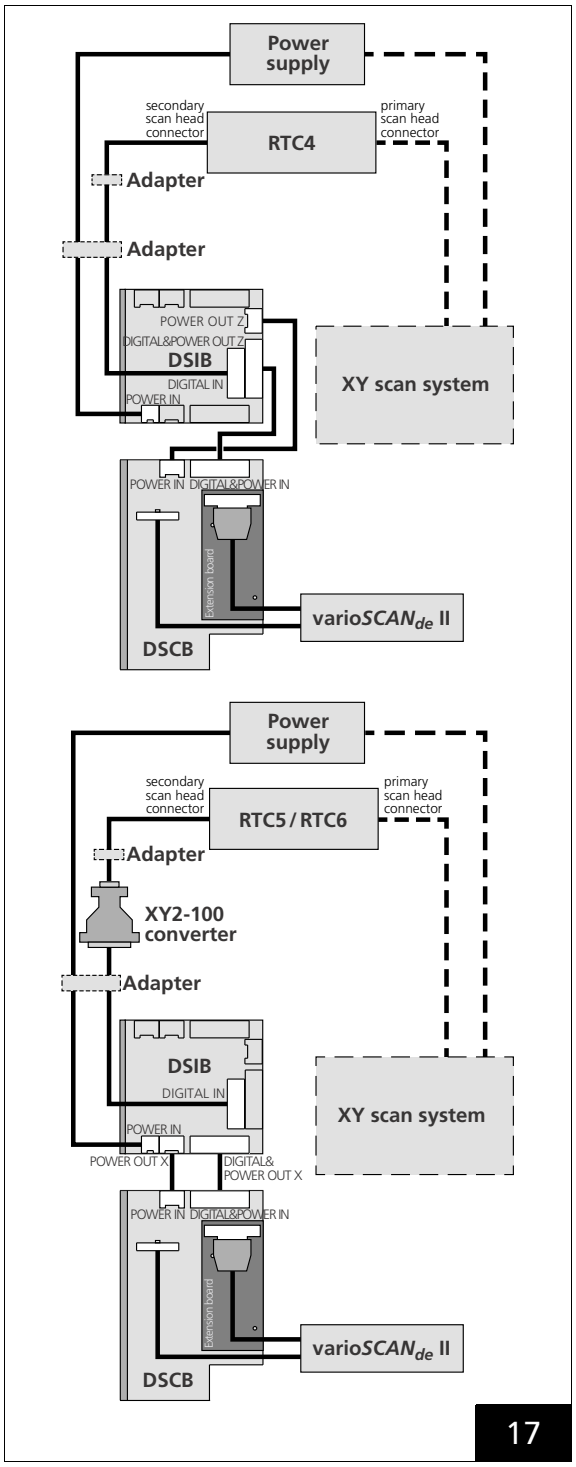

System cabling

Note the difference in cabling between the DSCB and DSIB boards when using an RTC4 board (top) vs. an RTC5 or RTC6 board (bottom).

5.2.1 Connecting the vario*SCAN* II

The vario*SCAN* II and the DSCB servo control board are one functional unit. Do not interchange the servo boards. Optimum positioning accuracy cannot be guaranteed if servo boards are interchanged. Therefore, if you received more than one servo board (or several electronic boxes), make sure the various electronic components are properly combined. To help achieve this, each servo board's angle plate is marked with the serial number of its assigned vario*SCAN* II.

The two cables connecting the vario*SCAN* II and the DSCB board are part of the vario*SCAN* II.
The default cable length including the connector is approx. 0.55 m.

Connect the vario*SCAN* II as follows:

- Connect the vario*SCAN* II to the expansion board's 9-pin D-Sub connector and the DSCB servo control board's 5-pin connector (see (6) and (7) in figure 11 on page 31).

5.2.2 Connect the DSCB and DSIB Boards

The length of the data cable (particularly if this is a flat ribbon cable) should be as short as possible to avoid interference. If the recommended maximum length of 0.3 m needs to be exceeded, contact SCANLAB.

Connection when using a RTC4 board

Connect the boards as follows:

- Connect the DSCB board's POWER IN connector (see (4) in figure 11 on page 31) to the DSIB interface board's POWER OUT Z connector (see (8) in figure 13 on page 33) using a 1:1 cable. A suitable cable is already attached to the DSIB board (default cable length incl. connector: either approx. 0.13 m or approx. 0.30 m).
- Connect the DSCB board's DIGITAL&POWER IN connector (see (5) in figure 11 on page 31) to the DSIB board's DIGITAL&POWER OUT Z connector (see (11) in figure 13 on page 33) via a 1:1 cable. A suitable cable is supplied with the DSIB board (default cable length incl. connector: either approx. 0.13 m or approx. 0.30 m).

Connection when using a RTC5 or RTC6 board

Connect the boards as follows:

- Connect the DSCB board's POWER IN connector (see (4) in figure 11 on page 31) to the DSIB interface board's POWER_OUT_X (or POWER_OUT_Y) connector (see (6) and (7) in figure 13 on page 33) via a 1:1 cable. An appropriate cable is already attached to the DSIB board (default cable length including connector: either approx. 0.13 m or approx. 0.30 m).
- Connect the DSCB board's DIGITAL&POWER IN connector (see (5) in figure 11 on page 31) to the DSIB interface board's DIGITAL&POWER OUT X (or DIGITAL&POWER OUT Y) connector (see (9) and (10) in figure 13 on page 33) via a 1:1 cable. A suitable cable is already attached to the DSIB board (default cable length including connector: either approx. 0.13 m or approx. 0.30 m).

5.2.3 Connect the DSIB and RTC Boards

Figure 18 shows the pinout of the DSIB board's DIGITAL IN connector.

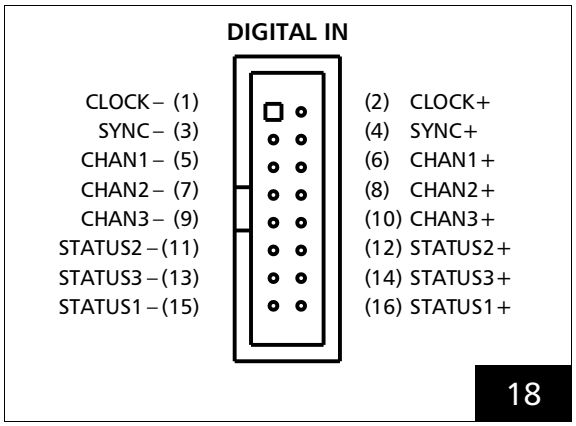

DSIB board's DIGITAL IN connector. pinout

Suitable cables are optionally available from SCANLAB.

These data cables are equipped at both ends with 25-pin male D-Sub connectors (also see page 47), matching the 25-pin female D-Sub connector at the RTC board's primary scan head port or at the XY2-100 converter.

SCANLAB's optional DA20 and DA30 adapters feature a board with D-Sub connectors and a short cable (default cable length approx. 0.14 m) to facilitate installation of data transmission and power connectors into a customer-specific housing. Adapter DA20 (SCANLAB Art. No. 103483) provides a 25-pin female D-Sub connector (DATA) and a 9-pin male D-Sub connector (POWER). Adapter DA30 (SCANLAB Art. No. 104276) provides a 25-pin female D-Sub connector (DATA) and a 3-pin male D-Sub connector (POWER). Connector pinouts are shown in figure 19 and figure 20.

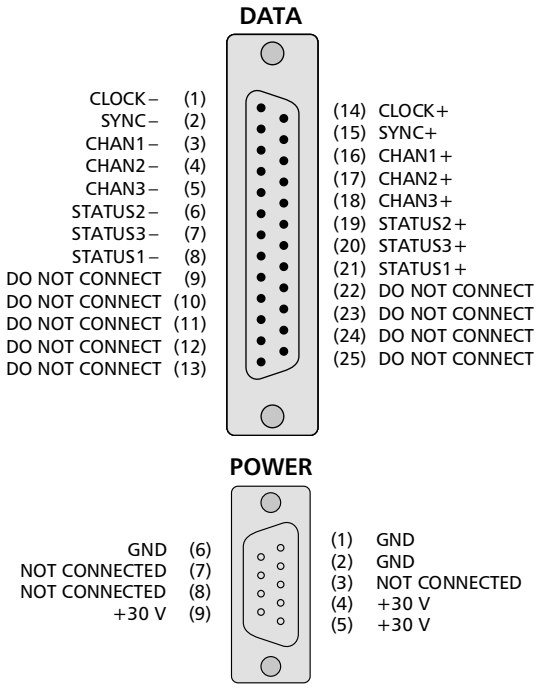

Female DATA connector and male POWER connector of adapter DA20: pinouts

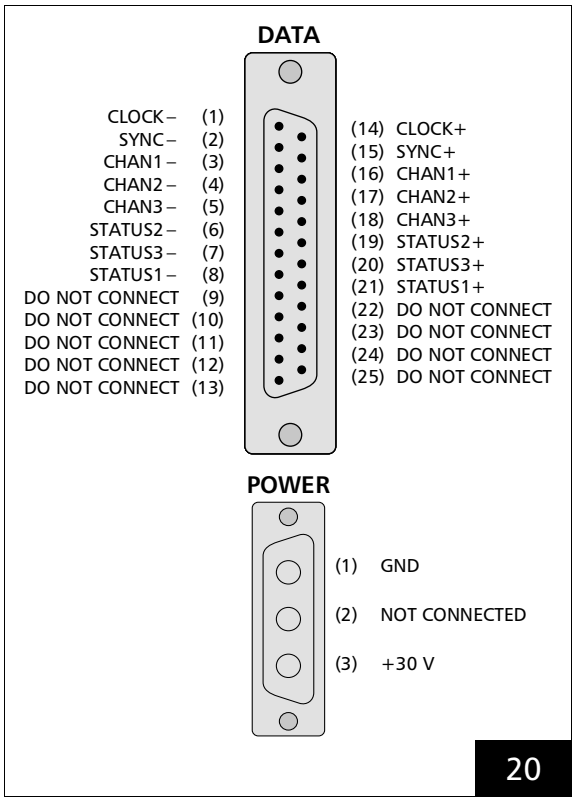

DA30 adapter's female DATA and male POWER connectors: pinouts

Appropriate adapters (cable with slot bracket and D-Sub connector; Y cable for the RTC6 Ethernet) are available from SCANLAB for connecting a data cable with its D-Sub connector (or an XY2-100 converter) to the RTC board's secondary scan head connector (which is not D-Sub connector).

Connect the boards as follows:

- Connect the DSIB board's DIGITAL IN connector (see (4) in figure 13 on page 33) or (if used) a DA20/DA30 adapter's DATA connector (pinouts shown in figure 19 and figure 20 on page 43) to a scan head connector at the RTC board using a 1:1 cable.
  - Typically, the XY scan system is connected to the RTC's primary scan head connector and the vario*SCAN* II to the secondary scan head connector. But inverse connection is also possible. So take care to correctly assign the correction file (see page 52).
  - An XY2-100 converter is required for connecting the DSIB to an RTC5 or RTC6 board (see figure 17 below).

5.2.4 Connecting the Power Supply

The power supply and the XY2-100 Enhanced interface are galvanically isolated from each other. The vario*SCAN* II and the XY scan system must be separately supplied with power.

Connect the power supply as follows:

- Use a suitable cable to connect the power supply to the DSIB board's POWER IN connector (see (3) in figure 13 on page 33; pinout shown in figure 21) or to (if used) a DA20/DA30 adapter's POWER connector (pinout shown in figure 19 and figure 20 on page 43).

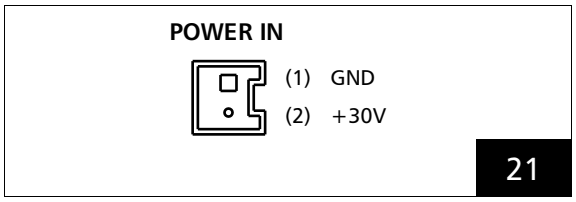

DSIB board's POWER IN connector: pinout

- Exactly follow all electrical specifications in chapter 5.4 on page 47.

5.3 Control via a Separate DSIB-SL Interface Board

SCANLAB's DSIB-SL digital interface board provides an SL2-100 interface for electrical transmission of data. A single DSIB-SL board enables control of up to two axes. The DSIB-SL board can be connected to an RTC5 or RTC6 board (with enabled 3D option).

Figure 22 shows how the following components are connected:

- vario*SCAN* II
- vario*SCAN* II's DSCB servo control board
- DSIB-SL digital interface board
- RTC control board
- XY scan system
- power supply

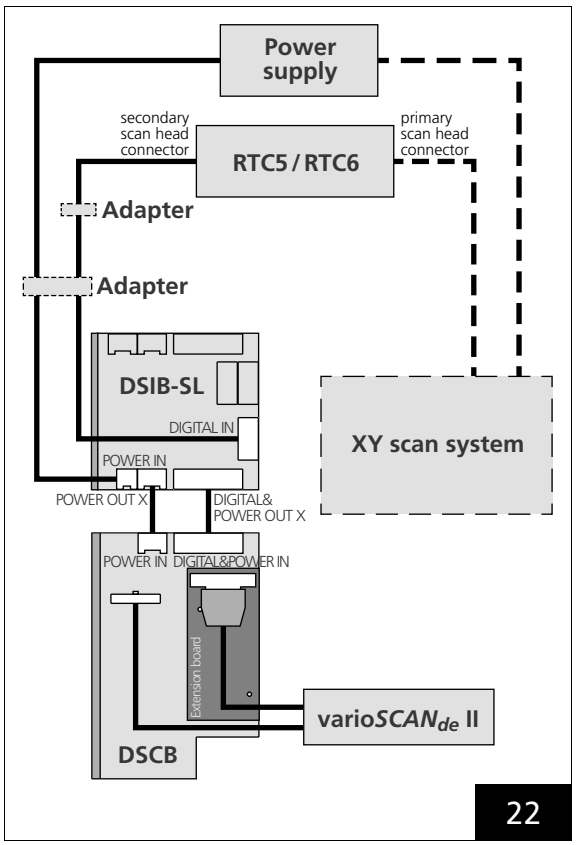

System cabling

Suitable data cables and adapters are optionally available from SCANLAB. After installing the individual components, connect them as described below.

Caution!

- When wiring the system, make sure none of the wires carry any voltages. All control devices must be turned off.
- Always turn off the power supply before connecting or disconnecting the power cables or data cables.
- Follow all electrical specifications exactly.

5.3.1 Connecting the vario*SCAN* II

The vario*SCAN* II and the DSCB servo control board are one functional unit. Do not interchange the servo boards. Optimum positioning accuracy cannot be guaranteed if servo boards are interchanged. Therefore, if you received more than one servo board, make sure the various electronic components are properly combined. To help achieve this, each servo board's angle plate is marked with the serial number of its assigned vario*SCAN* II.

The two cables connecting the vario*SCAN* II and the DSCB board are part of the vario*SCAN* II.
The default cable length including the connector is approx. 0.55 m.

Connect the vario*SCAN* II as follows:

- Connect the vario*SCAN* II to the expansion board's 9-pin D-Sub connector and to the 5-pin connector on the DSCB board (see (6) and (7) in figure 11 on page 31).

5.3.2 Connecting the DSCB and DSIB-SL Boards

The length of the data cable (particularly if this is a flat ribbon cable) should be as short as possible to avoid interference. If the recommended maximum length of 0.3 m needs to be exceeded, contact SCANLAB.

Connect the boards as follows:

- Connect the DSCB board's POWER IN connector (see (4) in figure 11 on page 31) to the DSIB-SL board's POWER OUT X (or POWER OUT Y) connector (see (6) and (7) in figure 13 on page 33) via a 1:1 cable. The DSIB-SL's scope of delivery includes an appropriate cable (default cable length including connector: either approx. 0,13 m or approx. 0,30 m).
- Connect the DSCB board's DIGITAL&POWER IN connector (see (5) in figure 11 on page 31) to the DSIB-SL board's DIGITAL&POWER OUT X (or DIGITAL&POWER OUT Y) connector (see (9) and (10) in figure 13 on page 33) via a 1:1 cable. The DSIB-SL's scope of delivery includes an appropriate cable (default cable length including connector: either approx. 0,13 m or approx. 0,30 m).

5.3.3 Connecting the DSIB-SL and RTC Boards

Figure 23 shows the pinout of the DSIB-SL board's DIGITAL IN connector.

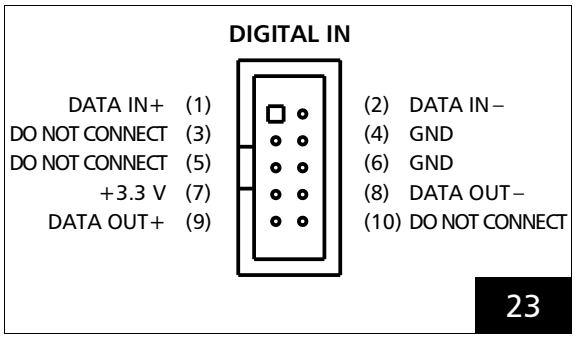

Pinout of the DSIB-SL interface board's DIGITAL IN connector

Suitable data cables and adapters are optionally available from SCANLAB.

These data cables are equipped at both ends with 9-pin male D-Sub connectors (also see page 47), matching the 9-pin female D-Sub connector at the RTC5 or RTC6 board's primary scan head port.

SCANLAB's optional DA40 adapter (Art. No. 104553) for the DSIB-SL board provides a DATA connector and a POWER connector, as well as a short cable (default cable length approx. 0.14 m) for attachment to the DSIB-SL board's DIGITAL IN and POWER IN connectors. This facilitates installation of data transmission

and power connectors into a customer-specific housing. Pinouts of the (9-pin male D-Sub) DATA connector and (3-pin male D-Sub) POWER connector are shown in figure 24.

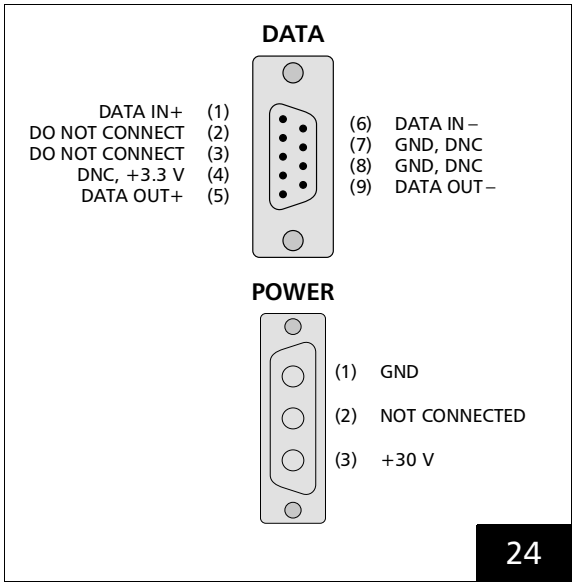

Pinouts of DA40 adapter's female DATA and male POWER connectors

Appropriate adapters (cable with slot bracket and D-Sub connector; Y cable for the RTC6 Ethernet) are available from SCANLAB for connecting a data cable with its D-Sub connector to the RTC5 or RTC6 board's secondary scan head connector (which is not a D-Sub connector).

Connect the boards as follows:

- Connect the DSIB-SL board's DIGITAL IN connector (see (5) in figure 13 on page 33) – or (if used) the DA40 adapter's DATA connector (pinout shown in figure 24 on page 46) – to one of the RTC board's scan head connectors via a suitable cable.
  - Typically, the XY scan system is connected to the RTC's primary scan head connector and the vario*SCAN* II to the secondary scan head connector. But inverse connection is also possible. So take care to correctly assign the correction file (see page 52).

5.3.4 Connecting the Power Supply

The power supply and the SL2-100 data interface are galvanically isolated from each other. The vario*SCAN* II and the XY scan system must be supplied with power separately.

Connect the power supply as follows:

- Use a suitable cable to connect the power supply to the DSIB-SL board's POWER IN connector (see (3) in figure 13 on page 33 and pinout in figure 25) – or (if using) to a DA40 adapter's POWER connector (pinout shown in figure 24).

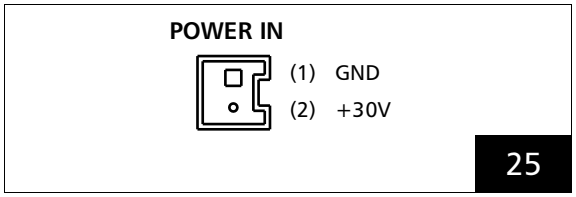

DSIB-SL interface board's POWER IN connector: pinout

- Exactly follow all electrical specifications in chapter 5.4 on page 47.

5.4 Data Cable

Suitable data cables are optionally available from SCANLAB. But if the data cable for connecting the RTC4 control board with XY2-100 Enhanced interface to a DSIB interface board or the data cable for connecting the RTC5 or RTC6 control board to a DSIB-SL interface board is not included in the scope of delivery, then SCANLAB strongly recommends the following cable configuration (data cable layout and pin assignments are shown in figure 26 and figure 27 on page 48):

- The data cable for connecting the RTC4 control board with XY2-100 Enhanced interface to a DSIB interface board (for data transfer using the XY2-100 protocol, see figure 26) should be fitted with 25-pin male D-Sub connectors with identical pinouts at both ends.
  The 8 channels CLOCK±, SYNC±, CHAN1±, CHAN2±, CHAN3±, STATUS2±, STATUS3±, STATUS1± (16 wires) should each be realized as twisted cable pairs.
  The data cable's controller end must be fitted with a ferrite ring (e.g. Würth WE 742 711 32).
  The data cable should not be longer than 10 m. If a longer data cable is needed, the signal timing of the RTC control board should be adjusted to ensure correct communication between the RTC and the interface board. (For details, see the RTC command **set_piso_control** in the corresponding RTC manual).
- The data cable between the RTC5 or RTC6 control board and a DSIB-SL interface board (for data transfer using the SL2-100 protocol, see figure 27) should be fitted with 9-pin male D-Sub connectors with identical pinouts at both ends.
  The two channels DATA IN± and DATA OUT± (4 wires) consist of twisted cable pairs and should be *cross-connected* at both D-Sub connectors (so that the RTC5/RTC6 board's DATA OUT signal flows to the scan head's DATA IN input).
  The cable length should not exceed 25 m.
  SCANLAB recommends a cable impedance of 110 Ω, independent of the cable length.
- The data cable must have coaxial copper braided shielding.
  The male D-Sub connectors must have fully shielded metal housings. The cable's shielding must *not* be implemented as a wire at the D-Sub housing. Instead, it must be conducted *coaxially* via shielded cable clamps.

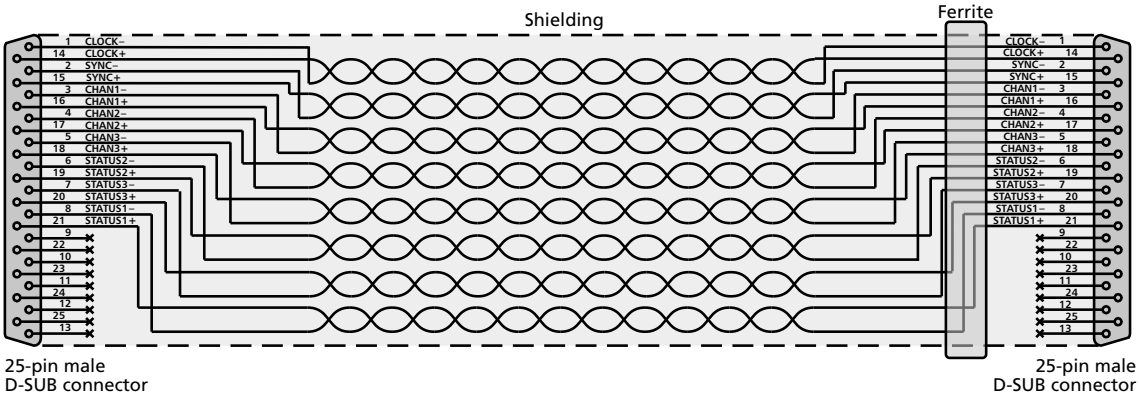

26

Data cable for data transmission according to XY2-100 protocol: pinouts and layout

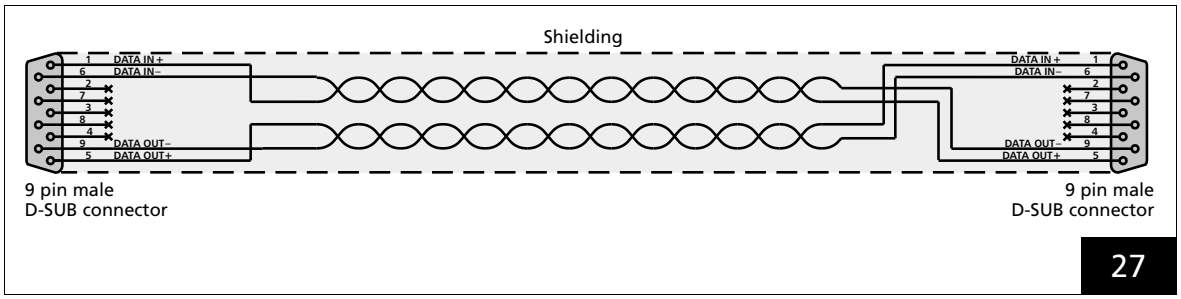

Data cable for data transmission according to SL2-100 protocol: pinouts and layout

5.5 Power Supply

5.5.1 Specifications

The vario*SCAN* II requires a balanced DC power source of 30 V (29 - 33 V) or 48 V (±2 V), or alternatively a balanced DC power source of ±(15+1,5) V, with a maximum current of 1,5 A. The residual DC ripple should not exceed 100 mV_{PP}.

The vario*SCAN* II has reverse polarity protection and inrush current limiting. The power supply and data interface are galvanically isolated from each other.

The power supply is monitored by the DSCB servo control board (see "Assuring Reliable Power" on page 16).

For information about the power supply requirements of your XY scan system, refer to its corresponding manual.

5.5.2 Connecting

The vario*SCAN* II's DSCB servo control board must be connected to a SCANLAB digital interface board. The vario*SCAN* II will then receive its power from the DSCB board's 3-pin POWER IN connector (see (4) in figure 11 on page 31).

When connecting the power supply, observe the following points:

- To ensure reliable operation, the vario*SCAN* II or its clamping block must be electrically insulated (see chapter 4.1 on page 22).
- The varioSCAN II or its digital interface board are separately connected to the power supply.
- The cable connecting the power source to the vario*SCAN* II must be shielded and should have a cross-sectional area of at least 1.5 mm^2 per pole and a length not exceeding 6 m. RFI must be minimized by connecting the cable's shielding at one end (utilizing a large surface area) to the power supply's metal shielding, and at the varioSCAN II's end to the D-Sub connector's housing.
- The vario*SCAN* II is usually operated with a 30 V power supply, but operation with two ±15 V power supplies is also possible (see figure 28). Another option is the 48 V power supply (see figure 29).
  Though power supplies are typically not included in the scope of delivery, they are optionally available from SCANLAB.

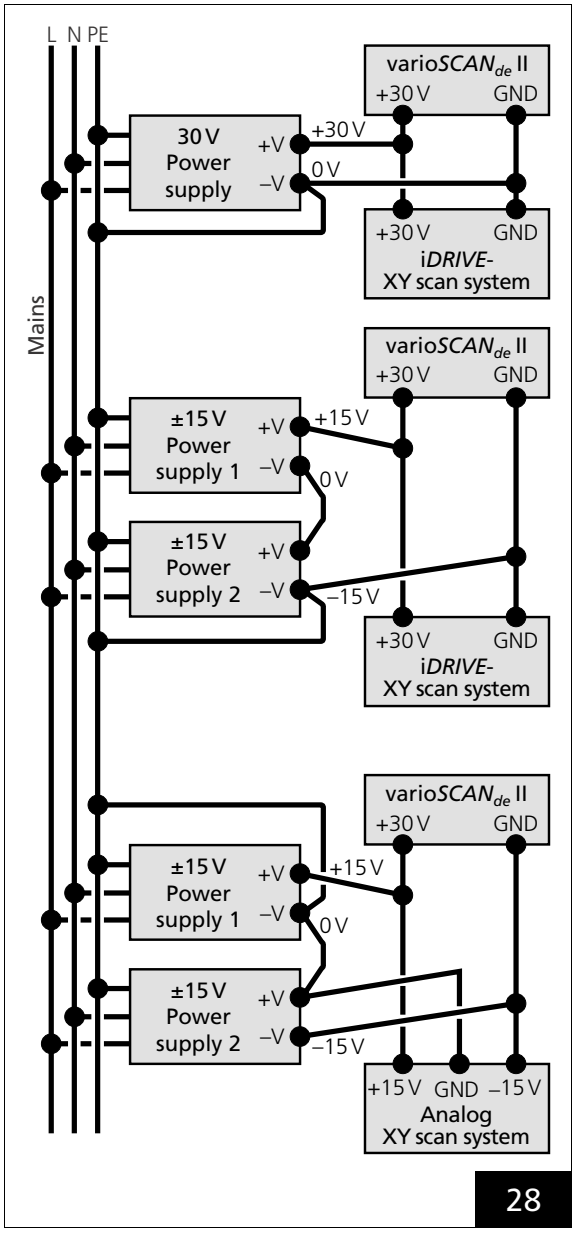

Connection to the mains grounding wire 30 V (PE)

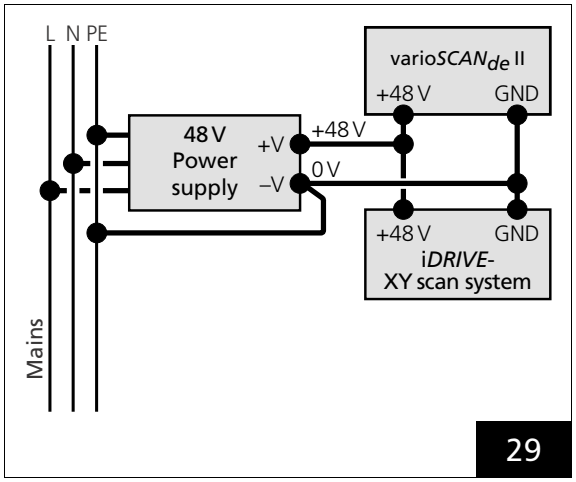

Connection to the mains grounding wire 48 V (PE)

Connect the power supply as follows:

- Make sure each power connection has the correct polarity.
- Connect each pole of the power source via an appropriate cable to all pins of the vario*SCAN* II connector (on the digital interface board or optional adapter).
- If you connect the XY scan system and the vario*SCAN* II to the same power supply but not to a common digital interface board, then observe the following notes (also see figure 28 on page 49):
  - If a +30 V or 48 V power supply is used for the vario*SCAN* II and an i*DRIVE* scan system (intelli*SCAN* or excelli*SCAN*), then connect the 0 V connection of the power supply output side to the mains grounding wire (PE).
  - If a ±15 V power supply is used for the vario*SCAN* II and an i*DRIVE* scan system, then connect the –15 V connection of the power supply output side to the mains grounding wire (PE).
  - If a ±15 V power supply is used for the vario*SCAN* II and an analog XY scan system, then connect the 0 V connection of the power supply output side to the mains grounding wire (PE).

Caution!

- In this configuration, the vario*SCAN* II's GND connector (and thus also its electronics and housing) are connected to –15 V.
  Therefore, the housing must be mounted potential-free.

- If the vario*SCAN* II and the XY scan system are connected to two different power sources, then connect the vario*SCAN* II's ground connector to the XY scan system's ground connector.

6 Control

6.1 Position Control

6.1.1 Digital Control via a SCANLAB Digital Interface Board (without RTC Board)

If the vario*SCAN* II's DSCB digital servo control board is connected to a SCANLAB digital interface board, then the vario*SCAN* II can be controlled via digital signals. The extremal positions of the vario*SCAN* II's movable diverging optic are reachable via the maximum and minimum allowed set values (in conjunction with a DSIB interface board these are 65536 and 0; in conjunction with a DSIB-SL interface board these are +524287 and –524288). An increase of the specified value moves the vario*SCAN* II's diverging optic in the direction of the beam exit, thus increasing the vario*SCAN* II's focal length.

6.1.2 Digital Control with an RTC Board

If the DSCB digital servo control board is connected to a SCANLAB RTC control board via a SCANLAB digital interface board, then the vario*SCAN* II can be controlled via RTC commands from a controlling PC. These commands can be integrated into a customer-specific application (e.g. a C program) and allow you to specify the desired position within the processing volume. The controlling PC with RTC control board delivers the corresponding position signals (set values) for the vario*SCAN* II (and the XY scan system's galvo scanners).

Assisted by a 3D correction table in an RTC software correction file, the RTC board:

- calculates appropriate vario*SCAN* II focal lengths for each XY position of the XY scan system
- compensates distortions of the image field caused by the scan system's two-mirror configuration or by the shift of the working plane

The correction file is specific for a certain working distance, field size and optical configuration of the vario*SCAN* II. For details, refer to the section "3D Correction Table Assignment" on page 52 or the RTC manual.

In the RTC command set, the desired X, Y and Z values for the XY scan system and the vario*SCAN* II must be specified as bit values, which are calculated via multiplying the desired values in [mm] by the calibration factor K in [bits/mm]. The calibration factor K in [bits/mm] and the usable scan volume (X x Y x Z in [mm]) are listed in the separate data sheet "Characteristics of the 3-Axis Configuration".

Figure 5 on page 18 shows the reference system for the image field which is used by the RTC boards. The Y axis points in the reverse direction of the entering laser beam, the Z axis points in the reverse direction of the emerging laser beam (X axis, Y axis and Z axis form a right-handed reference system). The extremal positions of the movable diverging optic are reached via the maximum and minimum allowed Z values (set values) +32767 and –32768.

An increase of the specified bit value moves the vario*SCAN* II's diverging optic in the direction of the beam entrance, thus decreasing the vario*SCAN* II's focal length.

Notes:

- Control of a vario*SCAN* II via an RTC board is only possible if its 3D option is enabled.
- The calibration factor for RTC4 boards (PCIe and Ethernet) is equal in the X, Y and Z directions. Correction files in the ctb format must be used with these boards.

Notes:

- The calibration factor for RTC5 and RTC6 boards (PCI, PCIe and Ethernet) is equal only in the X and Y directions. The Z direction's calibration factor is different: $K_z = K_{xy} / 16$. Correction files in the format ct5 must be used with these boards.
- The RTC commands are detailed in your RTC board's manual.

3D Correction Table Assignment

With the help of 3D correction tables, the RTC control board calculates appropriate vario*SCAN* II focal lengths for each position within the processing plane or volume. A correction table can be loaded onto the RTC board from a 3D correction file included in the RTC software via the RTC command **load_correction_file**. Afterward, the correction table must be assigned to the desired scan head connector of the RTC board via the RTC command **select_cor_table**.

Take into account that RTC4 boards use different correction files than RTC5 and RTC6 boards, and that correction table assignment for the RTC4 board differs from that for RTC5 and RTC6 boards (also refer to the manual of your RTC board):

RTC4 Control Board

The digital interfaces of the RTC4 PCIe and RTC4 Ethernet boards allow transmission of X, Y and Z data via one scan head connector.

Correction tables for these boards can be loaded from 3D correction files with the name/format D3_XXXX.ctb.

Assign the correction table as follows:

- If the vario*SCAN* II is connected to a scan head connector via a separate SCANLAB digital interface board and an XY scan system is attached to the other scan head connector, then assign the same correction table to both scan head connectors with **select_cor_table(1,1)**.
  (In this case, the RTC control board's "second scan head" option must be enabled additionally to the 3D option).
- If the vario*SCAN* II is connected to a scan head connector via a separate SCANLAB digital interface board and *no* XY scan system is attached to the other scan head connector, then assign the correction table to the scan head connector to which the digital interface board is attached (with the command **select_cor_table(1,0)** or **(0,1)**).

RTC5 and RTC6 Control Boards

The digital interfaces of the RTC5 and RTC6 boards (PCI, PCIe and Ethernet) allow transmission of X and Y data via one scan head connector and transmission of Z data via both channels of the other scan head connector. Here, the vario*SCAN* II can only be controlled via a separate interface board.

Correction tables for these boards can be loaded from 3D correction files with the name/format D3_XXXX.ct5.

Assign the correction tables as follows:

- Assign the correction table to the scan head connector to which the vario*SCAN* II's digital interface board is *not* attached:
  - If the vario*SCAN* II's digital interface board is attached to the secondary scan head connector, then assign the 3D correction table to the primary scan head connector with **select_cor_table(1,0)**.
  - If the vario*SCAN* II's digital interface board is attached to the primary scan head connector, assign the 3D correction table to the secondary scan head connector with **select_cor_table(0,1)**.

6.2 Returned Signals

6.2.1 Digital Control via a Digital Interface Board (without RTC Board)

If the vario*SCAN* II's DSCB digital servo control board is attached to a SCANLAB digital interface board, then the status signals generated by the servo control board are returned as digital values via the status channel of the digital interface board (for the returned data types see the next section).

6.2.2 Digital Control with an RTC Board

If the vario*SCAN* II's DSCB digital servo control board is connected to a SCANLAB RTC control board via a SCANLAB digital interface board (see overview on page 20), then status signals generated by the vario*SCAN* II's (and XY scan system's) servo control board are returned to the RTC board for evaluation. RTC commands such as **get_head_status** or **get_value** can be used to query the current status. These commands can be integrated into a customer-specific application (e.g. a C program) to define status-dependent process sequences.

The vario*SCAN* II's digital servo architecture allows a wide variety of data signals to be returned to the RTC via the DSCB's status channel. This opens up possibilities such as monitoring the vario*SCAN* II's actual values during an application or carrying out comprehensive troubleshooting in case of operational malfunction. For the returned data signals of your XY scan system, refer to the corresponding RTC manual.

If the vario*SCAN* II is operated via an RTC4, RTC5 or RTC6 control board (PCI, PCIe or Ethernet), then the command **control_command** can be used for selecting which data the vario*SCAN* II should return to the RTC board. The selected data source will be transmitted until another source is selected. Data received by the RTC board can be synchronously or asynchronously read at any time via additional commands (for details, refer to your SCANLAB RTC manual).

XY2-100 Status Word

Five seconds after every reboot or reset, an XY2-100 status word is transmitted. The status word contains three status values that can be queried via the RTC command **get_head_status**:

- PWROK ("Power OK")
  PWROK = 0 signifies a problem in the power supply. In normal operation (after the electronic components have reached a stable operating state), the PWROK signal is 1.
  If the signal switches from 1 to 0 during operation, then **the laser must be turned off immediately**. Under some circumstances, the vario*SCAN* II could focus the laser beam to an unintended position, which may cause serious health hazards and severe equipment damage. The system should be checked immediately to determine the cause. PWROK = 0 can be caused, for example, by a defective power supply.
- TEMPOK ("Temperature OK")
  The TEMPOK signal switches from 0 to 1 within a few seconds after power-up.
- POSACK ("Position Acknowledge")
  POSACK = 1 signifies that the difference between the set value and the real position is less than 0.56% of the movable diverging optic's maximum travel range. The POSACK signal normally switches to 1 within a few seconds after power-up. The command **control_command** allows you to change the POSACK threshold value (see "Process Monitoring" on page 56).

The Z return channel returns the vario*SCAN* II's three XY2-100 status values separately from any status values of the XY scan system (in contrast, the X and Y return channels of a 2-axis or 3-axis scan system both return a logically ANDed POSACK signal of the X and Y axis).

Additional Data Types

When the vario*SCAN* II is operated via an RTC board, then the command **control_command** (see RTC manual) can be used for selecting which data the vario*SCAN* II should return to the RTC board. Unless the setting is changed after reset, the XY2-100 status word will be transferred (see the previous section). The selected data is transmitted at 10 µs intervals until a different data type is requested.

The following is a description of the data types that may be selected (similar data can be separately evaluated for the X and Y axes of a 3-axis configuration).

Status (XY2-100)

This data type corresponds to the status word specified by the XY2-100 protocol (see the previous section).

Actual Position

Current actual position of the movable diverging optic on the mechanical travel path(1)

Set Position

Current set position of the movable diverging optic on the mechanical travel path

Position Error

Set Position – Real Position (difference between the current real position and the current set position of the movable diverging optic on the mechanical travel path)

Actual Current

Actual output stage current of the motor

Relative Motor Control

The motor's control voltage (in per mille of the maximum value)

Actual Velocity

Actual velocity of the movable diverging optic

Operational Status

The vario*SCAN* II provides various blocks of extended status information.

When the first block is selected to be returned to the RTC board, the following information will be provided about the current operational state:

- Status of output stage (on/off)
- Status of internal voltages (all voltages o.k. or at least one internal voltage not o.k.)
- Status of external voltage (o.k. or power supply interruption)
- Status of AD converter (successfully initialized or not initialized)
- Status of booting process (complete or not yet completed)
- Status of control parameters (valid or invalid)
- Boot signal: The control is activated as soon as all necessary flags are set
- Status of positioning (positioning error within the allowed range (< 0.56%) or no longer in the allowed range)
- Status of positioning (positioning within the allowed range or critical position reached)
- Temperature status (operating temperature of DSCB board reached or not yet reached)

(1) The position data read back via the status channel are returned in bit values from -2^{15} to 2^{15}. Here, the extreme values correspond to the mechanical edge positions of the lens position. The resulting positions in the respective 2D or 3D application are determined by the correction file.

- Error status (no critical error or system presently in critical error state). Critical errors include:
  - improper internal voltages
  - drop in the external power supply
  - reaching a critical edge position
  - reaching a critical dynamic load

  If a critical error occurs, the vario*SCAN* II automatically enters a permanent error state in which the output stage remains deactivated – even if the critical error was only temporarily present. Normal operation is *not* resumed.

Note:

- During permanent error states, the vario*SCAN* II will continue to transmit data to the control board. Even in these states, switching or querying of data types for diagnostic purposes is still possible.

The second information block can be selected to be returned to the RTC board if more detailed information about the current operational state is desired. This block separately indicates potential error states of the various internal voltages and of the servo board temperature.

Alternatively, two further status information blocks can be selected to be returned to the RTC board: They indicate the above-listed operation states at the moment of the most recently occurred operation interruption. After every successful restart – and, as long as no error has occurred – the status information in these two blocks will have no meaning. Only when an error causes a switch into a temporary or permanent error state will the current status values be saved here. Simultaneously, an event code is also set, indicating which particular event caused the error state. This event code can be read out separately.

Temperature

The DSCB board's temperature can be returned to the RTC board.

Internal Voltages

The following internal voltages can be returned to the RTC board:

- DSP core supply voltage (1.8 V)
- DSP IO voltage (3.3 V)
- Analog section voltage (9 V)
- AD converter supply voltage (5 V)

The exact values for the internal voltages may vary depending on the vario*SCAN* II serial number.

General Information

One of the following types may be selected:

- Serial number
- Art. No.
- Firmware version
- Calibration
- Aperture
- Wavelength
- Running time

6.3 Process Monitoring

The vario*SCAN* II provides internal protective mechanisms. The following is monitored:

- the power supply
- the position range and proper operation

(See "Internal Protective Functions" on page 16):

When the vario*SCAN* II is operated with an RTC board, then an additional series of diverse data signals can be evaluated for monitoring or test purposes (see "Returned Signals" on page 53).

If an applications has critical position precision requirements, then the real position value can be monitored during that application's entire runtime.

Alternatively, other data signals (e.g. current velocity) can be analyzed during normal operation or even when testing a user application.

Malfunctions can be quickly detected if you regularly query (and store) the vario*SCAN* II's current operational states before, during and after operations. This also considerably simplifies determination of a malfunction's cause (see "Fault Diagnosis and Functional Test" on page 69).

If you monitor scan accuracy with the XY2-100 status word's PosAck status signal, then you'll also have the possibility to change the PosAcknowledge threshold value via the command **control_command**. The default start behavior is for the vario*SCAN* II to set the threshold value to 0.56% of the full positional range (i.e. 0.56% of 2^{16} counts).
If a different threshold value is desired, then you'll need to configure it (see "Configuring the Start Behavior" on page 56).

6.4 Configuring the Start Behavior

As delivered, the vario*SCAN* II is preconfigured by SCANLAB for a PosAcknowledge threshold value of 0.56% of the full positional range (i.e. 0.56% of 2^{16} counts) (also see "Process Monitoring" on page 56).

The settings can be changed by the command **control_command**. The changed settings are initially temporary, but can later be saved via **control_command** as starting settings for subsequent power-ups or resets (power switched off and switched on).

As long as the start behavior is not changed as described, the vario*SCAN* II will start using the starting settings pre-configured by SCANLAB on every power-up or reset.

The status return behavior of the vario*SCAN* II can only be temporarily changed. The corresponding start behavior is fixed by SCANLAB: after every restart, the scan system transmits the XY2-100 status word (also see page 53).

6.5 Tracking Error Compensation

The vario*SCAN* II's tracking error typically lags that of the XY scan system. This can, for example, produce unfavorable laser processing results due to focus lag when processing inclined surfaces.

If control of the focusing system and XY scan system is performed by a SCANLAB RTC6 board, then tracking error compensation can be activated to delay signals to the XY scan system. For this, use the RTC6 command **set_timelag_compensation** (see the RTC6 manual).
The vario*SCAN* II's tracking error is listed in Part 2 of this manual, and the scan head's tracking error is specified in the scan head's manual.

Even if the racking error compensation is applied, the XY scan system and the vario*SCAN* II show a different behavior during the acceleration phase. As a result, incorrect focusing can still occur during acceleration. Only after the final speed has been reached is the dynamic defocusing also constant or disappears. The acceleration time required here corresponds to twice the larger tracking error (that of the XY scan system or that of the Z axis). Even when using the tracking error compensation, the delays must be selected accordingly for minimum dynamic defocusing.

6.5.1 Using the vario*SCAN* II with excelli*SCAN* and *SCAN*ahead Control

If the vario*SCAN* II is used in a 3D configuration with an excelli*SCAN*, SCANLAB recommends using the tracking error compensation of the RTC6 board (s**et_timelag_compensation**). Since the excelli*SCAN* with the *SCAN*ahead control does not have a tracking error, the PreviewTime is used here as a comparison value to the tracking error of the vario*SCAN* II (further details on this can be found in the manuals of the RTC6 and the excelli*SCAN*). Thus, after reaching the final speed, the focusing error disappears. During the acceleration phase, however, faulty focusing may occur again. If the occurrence is to be suppressed, the AccScale value can be set to 0. This switches the laser off during the acceleration phase.

As a rule, the maximum positioning and marking speed of the 3D configuration consisting of vario*SCAN* II and excelli*SCAN* is limited by the maximum running speed of the varioSCAN II.

6.5.2 High Dynamic Requirements

In general, the maximum achievable speeds for the XY scan system and the Z axis are different for a 3D configuration. The maximum speed of the 3D configuration is limited by the slower of the two speeds. When controlling with a strong dynamic load, the maximum speed of the 3D configuration must therefore be taken into account. If this is exceeded, focusing errors can occur constantly over the entire travel range and the vario*SCAN* II can reach the mechanical edge stops for the lens positions.

7 Commissioning

Danger!

Personal injury due to burns caused by very hot components inside the !

The Malfunctions: Dirty or damaged lenses as well as an incorrectly adjusted beam can cause optics or components to heat up strongly.

- In the event of such malfunction, it is important to allow sufficient time for cooling

Danger!

Personal injury due to burns caused by very hot separate electrical components of the !

Individual electrical components or the motor block become hot during operation.

- Allow sufficient time for cooling.
- Monitor the TempOK singal and current consumption to detect excessive heating.

7.1 Checking the Installation

Before placing the vario*SCAN* II into operation, carefully check the following:

- If protective caps were installed at the vario*SCAN* II's beam entrance and exit, have you removed them?
- Were the mechanical installation and electrical wiring fully and correctly carried out?
  (See chapter 4.1 on page 22.)
- If the vario*SCAN* II is equipped with an optional water-cooled entrance aperture, are the water cooling facilities properly connected?
  (See chapter 4.2 on page 25)
- Were the electrical connections fully and correctly carried out?
  (See chapter 4.3 on page 30.)
- Is the vario*SCAN* II's objective clean and free of dust?
  If necessary, clean the objective as described in "Periodic Inspection and Cleaning of the Objective" on page 65.

7.2 Checking the Laser Parameters

The vario*SCAN* II is designed for a laser beam with defined parameters.

Caution!

- Operate the vario*SCAN* II only with the specified laser parameters. Particularly take into account the following technical specifications listed in Part 2 of this manual:
  - A wavelength or wavelength range suitable for the AR coating
  - Dimension of the entrance aperture (determines the maximum beam diameter)
  - Beam expansion factor (the exit beam's diameter derives from this)
  - Maximum laser power density
  - Maximum laser power
- Check in test operation whether the vario*SCAN* II must be operated with water cooling (see chapter 4.2 on page 25).

- Compare the technical specifications (see Part 2 of the manual – Specific Description) to your application's requirements. For information on tolerances and deviations, contact SCANLAB.
- Ensure that your entering beam's wavelength and diameter, as well as the maximum laser power, are compatible with the vario*SCAN* II's specifications.

7.3 Integration into a 3-Axis Configuration

To integrate the vario*SCAN* II into a 3-axis configuration, SCANLAB recommends the setup shown in figure 30. The laser beam must be very precisely aligned with respect to the vario*SCAN* II's optical axis. Therefore, two adjustable mirrors should be placed in the beam path ahead of the vario*SCAN* II. For details, see chapter 7.5 "Alignment" on page 62.

To prevent the power densities on the optical components of the vario*SCAN* II and the XY scan system from being too high, the beam diameter at the inlet of the vario*SCAN* II must not fall below a critical size (see the power specifications of the vario*SCAN* II and the XY scan system). Otherwise, the optical elements may be damaged. If necessary, beam expanders (available on the market) can be used to adjust the beam diameter. The beam expander factor of the vario*SCAN* II is given in the Technical Specifications in Part 2 of the manual. The achievable focus diameters in the working volume depend accordingly on the illumination of the entrance aperture on the vario*SCAN* II.

If, on the other hand, the diameter of the beam entering the XY scan system is too large, there will be a loss of power at the entrance aperture of the scan system. This will reduce power density at the focused spot and might also lead to damage.

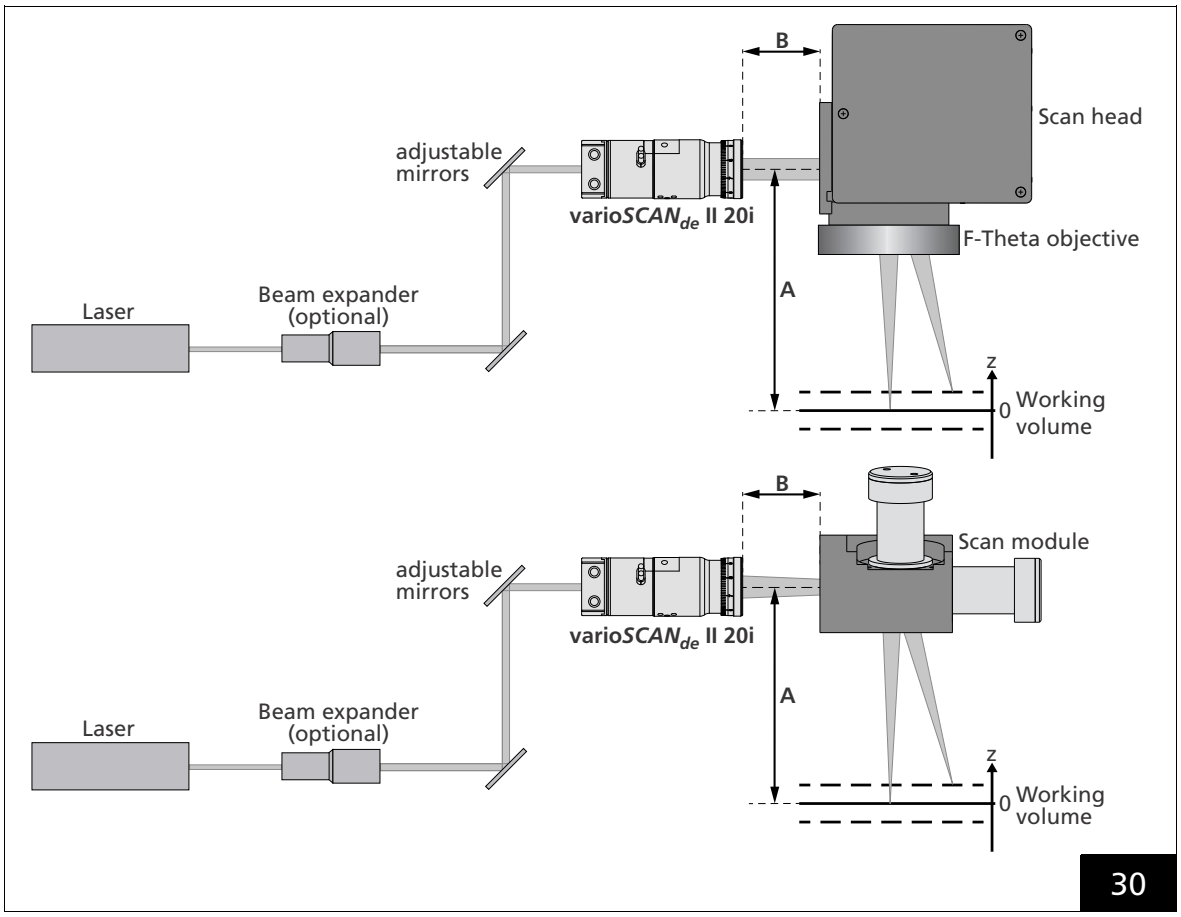

Setup of the 3-axis scan configuration – Definition of working distance A, the distance B and the origin of the Z-axis

7.4 Safe Startup and Shutdown Sequences

Caution!

- Damage will result if you operate the vario*SCAN* II without removing protective caps.
  Protective caps must be removed before first-time operation and before switching on the vario*SCAN* II's power supply.
- Only operate the varioSCAN II with suitable water cooling if you have determined during test operation that this is necessary (see chapter 4.2 on page 25).
- Always turn on the control (PC with RTC control board and control software) and the power supply for the vario*SCAN* II prior to turning on the laser. Otherwise the laser beam might be deflected in an arbitrary direction and system damage might occur.
- Power for the vario*SCAN* II and the XY scan system must be applied only after the control becomes active.
- When the vario*SCAN* II is switched on, it navigates to an optical reference mark. With an RTC control board, you can use the command **control_command(Data = 0528_H)** (see RTC manual) to query whether the reference mark has been found.
  If the reference mark was found, then Flag B6 of the returned data signal = 1 ("AD converter successfully initialized"); otherwise this flag = 0.
  If the reference mark is repeatedly not found, contact SCANLAB for support.

To ensure safety during startup, proceed exactly as follows:

(1) If the varioSCAN is equipped with a water-cooled entrance aperture, then start the water cooling facilities and monitor the flow to assure reliable cooling.

(2) Turn on the PC containing the RTC control board and start up the control software.

(3) Turn on the power supply for the vario*SCAN* II and XY scan system.

(4) Turn on the laser.

When shutting down the system, turn off the components exactly in reverse order.

7.5 Alignment

To ensure optimum performance of the laser scanning system, it is crucial that the vario*SCAN* II, the laser beam and the XY scan system (scan head or scan module) are precisely aligned with respect to each other. Incorrect alignment might lead to the following effects:

- vignetting of the laser beam
- impaired focus quality
- arbitrary translation of the image field

In most cases, the first-mentioned effect will be present. Vignetting occurs if the laser beam is not able to fully pass through the optical components. Part of the beam cross section will be cut off, reducing the working beam's power. Additionally, scan system damage may readily occur due to excessive absorption of laser power. Therefore, the alignment procedure must be carried out with considerable care.

7.5.1 Recommended Tolerances

To avoid vignetting, the system must be aligned as precisely as possible. If the laser beam profile is gaussian, the maximum tolerances appropriate for most applications are:

Beam Position

(relative to the vario*SCAN* II)'s optical axis

- tilt of the laser beam: < 5 mrad
- displacement: < 0.3 mm

Relative Orientation of XY Scan System and vario*SCAN* II

(relative to the input aperture of the XY scan system)

- tilt: < 5 mrad
- displacement: < 0.3 mm

If you use a laser with a flat top beam profile, it can be necessary to align the scan system with even higher precision. Avoid vignetting, especially with very high power lasers. Align as carefully as possible and – if necessary – reduce the beam diameter to an appropriate value.

7.5.2 Aligning the Components

Prior to aligning and adjusting the components, you must carry out the following steps:

- Suitably arrange all components of the system, including the laser, the beam expander (optional), adjustable mirrors and the XY scan system (see figure 30 on page 60).
- If present, remove protective caps from the vario*SCAN* II's beam entrance and beam exit.

For alignment, follow the steps listed below:

Danger!

- When installing or operating the vario*SCAN* II, never stare directly into the laser beam or its deflected radiation. Keep all parts of the body away from the laser beam and the deflected radiation.
  (Also refer to the chapter "Laser Safety" on page 11.)
- Adjust the output beam path by means of a laser with a laser class not higher than 2.

- The first element to align is the beam expander. Adjust its position so that the laser beam coincides with the optical axis of the beam expander. The beam expander must provide the correct expansion factor. So after the laser beam passes through the beam expander, the diameter of the beam has to match the vario*SCAN* II's entrance aperture; and after passing through the vario*SCAN* II, the diameter of the beam has to match the XY scan system's entrance aperture (also see "Checking the Laser Parameters" on page 59).
- Make sure that the beam is parallel after leaving the beam expander.
- Remove the vario*SCAN* II temporarily from the beam path.
- Adjust the adjustable mirrors preceding the XY scan system such that the laser beam enters the scan system in the center of the entrance aperture and perpendicular to the plane of the entrance aperture.

- Place the vario*SCAN* II into the beam path again and make sure that the beam leaving the vario*SCAN* II
  enters the scan system in the center of the beam entrance aperture and perpendicular to the plane of the entrance aperture. This should be achieved – if possible – by moving *only* the vario*SCAN* II to the correct position and orientation. If additional corrections are necessary, the positions of the adjustable mirrors between the beam expander and the vario*SCAN* II can also be readjusted.

7.5.3 Adjusting the Distance to the Scan System

The distance **B** is defined as the distance between the vario*SCAN* II's exit (focusing ring in the neutral position, i.e. scale points to null position) and the XY scan system's beam entrance (see figure 30 on page 60).

The correct distance **B** was calculated by SCANLAB based on the optical properties of the 3-axis scan system and on the used correction file. The distance **B** is listed in the data sheet "Characteristics of the 3-Axis Configuration". This data sheet is always created only for a specific 3-axis configuration and a specific correction file.

- Adjust the distance **B** to the value provided in the data sheet.

7.5.4 Adjusting the Working Distance

To ensure that the scan system delivers good results, the following three important parameters must match:

- The working distance between the XY scan system and the z = 0 working plane (see distance **A** in figure 30 on page 60).
  (The working distance is defined as the distance between the entering beam's optical axis and the nominal working plane.
  If the XY scan system is used with an F-Theta objective, the working distance at z = 0 corresponds to the nominal working plane of the objective)
- The focus position or back focal length
- The assigned correction table's coefficient **A,** used for control via an RTC board

If there are large deviations from the specified values, the size of the image field will change and the correction file will not correctly compensate field distortions. Thus, the working distance of the scan system must be accurately adjusted before the scan system can be placed into operation. (The two remaining parameters do not need to be adjusted in this procedure.)

The exact procedure for adjusting the working distance depends on the components used. If you're using a SCANLAB RTC board for control, then proceed as follows:

SCANLAB provides you with a correction table matched to your scan system and your requirements. The working distance is a key input variable for calculating this correction table. You can find the value used for the working distance in both the correction table's ReadMe.txt file and the "Characteristics of the 3-Axis Configuration" data sheet.

Adjust the working distance and focus position as follows:

- First adjust the working distance (see **A** in figure 30 on page 60) between the XY scan system and the z = 0 working plane in accordance with the specified value.
- Turn on the controlling PC containing the RTC control board and start up the control software.
- Turn on the power supply for the vario*SCAN* II and the XY scan system.
- Move the laser focus to the reference point specified in both the Readme.txt file and the "Characteristics of the 3-Axis Configuration" data sheet.
  If using an RTC board, issue the command **goto_xyz(X, Y, Z)**.
- Turn on the laser.
- Scan a test pattern onto the working plane as near as possible to the reference point. Here, suitably set dynamics-related parameters so that the test points' target positions will be reliably reached.
- Based on the marking results, adjust the vario*SCAN* II's objective for an optimal focus position by manually turning the focusing ring.

7.5.5 Checking the Z-Axis Calibration

When the laser focus is moved to a desired point within the image field, the RTC board adjusts the focal length of the vario*SCAN* II accordingly. Here, the RTC board uses a correction table included in the 3D correction file supplied with the RTC software (for details, refer to the RTC manual or the "RTC 3D Software" manual).

The exact output values for the vario*SCAN* II depend on various parameters such as beam divergence and the tolerances of the optical components. Therefore, in some cases the pre-calculated correction table might not fit optimally to the individual scan system.

To check if this is the case, SCANLAB recommends the following procedure:

- Run a laser marking test that covers the entire image field and, if necessary, the maximum focus shift in the Z direction. Check if the laser focus meets your application's requirements.
- If you find significant levels of incorrect spot positioning, it might be necessary to re-calibrate the Z-axis correction table.

Note:

- How to calibrate the vario*SCAN* II and the entire 3-axis system is described in detail in the provided Application Note "Calibrating a 3-Axis Laser Scan System".

7.6 Monitoring Operating Temperature and Current Draw

The vario*SCAN* II can be optionally equipped with a water-cooled beam entrance aperture at the beam entrance to dissipate heat generated by absorbed laser power.
In a test, determine whether operation with a water-cooled entrance aperture is required for your vario*SCAN* II in the given application (see chapter 4.2 on page 25).

If excessive laser power or laser power density is applied at the vario*SCAN* II's entrance, then the vario*SCAN* II's optical components or motor can be destroyed. Therefore, follow the specifications for maximum laser power and the specifications for operating conditions (see Part 2 of this manual).

Operating the vario*SCAN* II with excessive current draw will heat up the electronics. Therefore, the current consumption of the DSCB servo control board should not exceed the value of 0.85 A RMS (26 W). If current draw passes a certain threshold, the vario*SCAN* II's output stage will very quickly switch off. Such exceedances are particularly caused by incorrect delays or excessive dynamic loads. However, the error is actually indicated as temperature critical (see RTC5 or RTC6 manual, **control_command**, Stop Event Code = 00030_H).

In this case, do not wait for the vario*SCAN* II to cool down. Instead shut down the system and then restart it. For further processing, you'll have to reduce current draw (e.g. by checking delays and reducing speeds).

Here, also observe the warning on current draw and temperature in chapter 4.2 on page 25)

8 Maintenance and Customer Service

8.1 Periodic Inspection and Cleaning of the Objective

A dirty objective can increase absorption of laser power or residual reflectivity of the coating. The dirt can burn into the surface and destroy the objective or generate intense back reflections on optical or mechanical components that result in damage. Consequential damage can also occur. The warranty does not cover any damage due to improper use, cleaning or handling.

Regularly check the vario*SCAN* II's objective. Any additional optical components in your overall system should also be inspected and, if necessary, cleaned. Consult the manuals of these components for appropriate inspection and cleaning procedures.

Danger!

Personal injury due to cuts caused by sharp edges!

Sharp edges caused by lens breakage can cause cuts.

- Do not open damaged
- Have maintenance and repair performed exclusively by SCANLAB
  (The exception is the cleaning of the lenses).

Danger!

When performing maintenance and cleaning on the vario*SCAN* II, never stare directly into the laser beam or its deflected radiation. Keep all parts of the body away from the laser beam and the deflected radiation. Switch off the laser or use a shutter to securely block it from entering the scan system.

If you find dirt, dust or other contaminants on the vario*SCAN* II's objective, then clean the optical surfaces as described below:

- Using a squeeze bulb or compressed clean air, blow air on the surface to remove dust and dirt particles. If it's still not clean, then use solvent and lens cleaning tissues as described below:

Cleaning Guidelines

- Use only clean lint-free tissues specially manufactured for cleaning optics (e.g. lens cleaning paper).
- Never clean the surface with dry lens cleaning tissue, because that can cause scratches.
- Use a solvent such as acetone or isopropanol of electronics or spectrographic purity (evaporation residue < 0.001%). Read and follow the relevant safety advice.
- Avoid skin contact with the optics.
- Use clean gloves impermeable to solvents.
- Only apply the lens tissue with light pressure.

(1) Fold a clean lens tissue.

(2) Dampen the folded lens tissue at one end with solvent. Don't use too much solvent, because otherwise drying marks might appear.

(3) Grip only the part of the lens tissue that won't come into contact with the protective window's surface.

(4) Place the dampened end of the tissue onto the center of the protective window and use a *circular* motion to wipe slowly but steadily from the center to the outer edges. Don't rub back and forth.

Repeat the procedure until the optical surface is completely clean. For each pass, use a new lens cleaning tissue.

Caution!

The diverging optic inside the vario*SCAN* II's motor block is a highly sensitive component that can be damaged if not handled properly.
If there is any uncertainty about cleaning, contact SCANLAB for further procedure.

8.2 Customer Service

8.2.1 Servicing and Repairs

Except for the objective's external optical surfaces, the vario*SCAN* II does not contain user-serviceable parts. All servicing and repairs should be performed only by SCANLAB. Only SCANLAB has the proper test facilities and procedures to service and clean the vario*SCAN* II.

Note:

The vario*SCAN* II and its DSCB servo control board must always be sent together to SCANLAB – the vario*SCAN* II and the servo control board are one functional unit.
If the servo control board is installed in the electronic box, then this must be sent together with the vario*SCAN* II.

8.2.2 Warranty

Notes:

SCANLAB guarantees the product to be free of defects in manufacturing and material.

The vario*SCAN* II is maintenance-free. Routine inspection is only required for dust accumulation on the external optical surfaces.

If the vario*SCAN* II is used in high-dynamics and high-precision applications, then SCANLAB strongly recommends periodically performing a functional test.

The warranty is valid for 12 months after delivery. Repairs covered under the warranty will be performed at SCANLAB. The scope of the warranty is limited to repair or replacement of the SCANLAB product.

SCANLAB is responsible for the return delivery of products repaired under warranty; the customer is responsible for delivery to SCANLAB.

SCANLAB will not be held responsible:

- when the product has been damaged through misuse or improper operation
- for damage due to improper laser power (e.g. focused beam on optical surfaces) or improper alignment
- for damage to optical components (objective etc.) caused by improper handling or cleaning
- for consequential damages
- if the vario*SCAN* II or its DSCB servo control board (or optional electronic box or vario*SCAN* FLEX-housing) have been altered
- if the warranty seal on the scan system (or optional electronic box or vario*SCAN* FLEX housing) has been broken

If a returned vario*SCAN* II must first be brought into a serviceable state by SCANLAB before servicing can begin (e.g. by removing added parts or cleaning the vario*SCAN* II), then the customer shall bear the additional cost.

8.2.3 Contacting SCANLAB

For service, repairs, advice or information, simply contact SCANLAB using one of the contact possibilities listed below:

SCANLAB GmbH

Siemensstr. 2a
82178 Puchheim
Germany

Tel. +49 (89) 800 746-0
Fax: +49 (89) 800 746-199

info@scanlab.de
www.scanlab.de

8.2.4 Product Disposal

The vario*SCAN* II and its DSCB servo control board (and optional electronic box or vario*SCAN* FLEX-housing) can be returned to SCANLAB for a fee to be properly disposed of.

9 Troubleshooting

Problem	Possible Cause
vario*SCAN* II no longer responds	• Is the vario*SCAN* II properly connected to the DSCB servo control board (or optional electronic box)? • Is the DSCB servo control board correctly connected to the separate interface board? • Is the DSCB servo control board correctly supplied with power? See "Electrical Connections" on page 37.
XY scan system no longer responds	• Is the XY scan system properly connected to the RTC via the data cable? • Is a suitable data cable used? • Is the XY scan system correctly powered? Refer to the manual of the XY scan system.
Distortion of the image field	• Is the appropriate correction file loaded and assigned? Refer to the Readme.txt file associated with the correction file.
Low laser power	• Is there dirt or dust on the vario*SCAN* II's objective or in the XY scan system? • Are the XY scan system's mirrors dirty or damaged? • See operating manual of your SCANLAB XY scan system. • Is the system correctly aligned (see "Alignment" on page 62)?
Changed laser spot	• Was Z-axis calibration properly performed and the correction file properly calculated and loaded? • Is the laser beam correctly aligned? To troubleshoot, proceed in the following order: **(1)** Check the setup of the beam expander: Is the expansion factor appropriate? Is the laser beam parallel when leaving the beam expander? **(2)** Is the system correctly set with respect to the working distance A (between the beam entering the vario*SCAN* II and the working plane) and with respect to the distance B (between the vario*SCAN* II and the XY scan system)? (Also see "Alignment" on page 62.) **(3)** Check that the laser beam coincides with the beam expander's optical axis. **(4)** Make sure the laser beam enters both the vario*SCAN* II and XY scan system at the centers of their entrance apertures and perpendicular to the planes of those entrance apertures. If the laser spot change persists, then realign your system as described in "Alignment" on page 62.
Positioning error after a jump	• Are the values defined for the RTC jump speed set too high (consider the vario*SCAN* II's dynamics), or are the values defined for the jump delays set too short?

If the problem persists, then contact SCANLAB (see page 67).

9.1 Fault Diagnosis and Functional Test

The vario*SCAN* II's versatile status return functions can also be used for system diagnostics. Information such as the following can be queried:

- the current operating state
- the operating state at the moment of the most recently occurred operation interruption
- an event code indicating which particular event caused the change to an error state

(Also see "Safety During Installation and Operation" on page 9).

In general, all status information can even be read after the vario*SCAN* II has entered an error state due to an internal protective mechanism (provided that the vario*SCAN* II is still sufficiently powered).

Data transfer between the RTC board and the vario*SCAN* II can be tested by transmitting an 8-bit value to the vario*SCAN* II via the command **control_command**. Subsequently, a 16-bit value will be returned on the corresponding status channel: If data transfer is error-free, then the upper 8 bits of the returned 16-bit value will be identical with the originally sent 8-bit value, and the lower 8 bits will be identical with the complement of the sent 8-bit value. These 16-bit values will be returned until the **control_command** is used to select another return data type.

The command **control_command** allows the currently used retransmission data type to be temporarily stored for later retrieval. This lets you restore whatever original return behavior was in effect before you conducted the data transfer test.

10 General Technical Specifications

The technical specifications listed here apply for all types of the vario*SCAN*$_{de}$ II 20i.
Your vario*SCAN* II's specific characteristics are listed in Part 2 - Specific Description.

Electrical Connections

Power supply	30 V DC (29–33 V), maximum 1.5 A or alternatively 48 V DC (±2 V) or ±(15+1.5) V DC, max. 1.5 A at each of the two poles
Motor Specifications	
Travel range	±2 mm
Tracking error	< 0.55 ms
Typical running speed	≤ 280 mm/s
Maximum running speed	400 mm/s
Repeatability	< 0.5 µm
Nonlinearity	< 3 µm
Long-term drift (over 8 hrs, with constant environmental conditions)	< 3 µm

Operating and Storage Conditions

Working temperature	25 °C ± 10 °C
Maximum temperature of Electronic box or at the angle plate of the electronic boards	50 °C
Maximum current draw of an DSCB board	
30V	0.85 A RMS
48V	0.54 A RMS
	(26 W)
Storage temperature(1)	−35 °C to +60 °C
Environmental conditions	non-condensing, non-corrosive

(1) Before storing or transporting, make sure to remove all coolant from the device's water-cooled parts.

Dimensions

vario*SCAN* II	
– Motor diameter	Ø43 mm
– Clamping surface diam.	Ø44_{h6} mm
– Objective diameter	Ø43.8 mm
(see figure 7 on page 22)	
Water-cooled entrance aperture (optional)	
– Length	19 mm
DSCB servo control board (see figure 11 on page 31)	118 mm x 80 mm x 30 mm
Electronic box (see figure 14 on page 35)	125 mm x 90 mm x 90 mm

Weight

vario*SCAN* II (type-dependent)	400 g to 700 g
Water-cooled entrance aperture (optional)	70 g
DSCB servo control board	310 g
Electronic box	
- empty weight	approx. 1.2 kg
- incl. electronic	approx. 2.2 kg

Cooling Water Specifications (optional)

Intake temperature of coolant	20...25° C, constant at ±0.5 K[1]
Required flow rate[2]	3 l/min
Coolant volume in entrance aperture	max. 3.3 ml
Pressure loss in entrance aperture in [3]	
– at 3 l/min	max. 0.2 bar
Maximum inlet pressure	4 bar
Coolant-wetted materials:	
– Heatsink	Stainless steel (1.4305) or Aluminum alloy (EN-AW 6082)[4]
– O-rings	Nitrile rubber (NBR)
Recommended coolant	Demineralized water with corrosion inhibitor and biocidal additive
Connection bore holes in heatsink	G1/8 threaded, 8 mm depth

(1) Elevated ambient temperatures and air humidities might require higher temperatures (above the operational site's dew point) to prevent condensation.
(2) To dissipate 100 watts of heat and warm the coolant by 0.5 K.
(3) Not including pressure loss in the supply lines.
(4) Which material the cooling screen of your vario*SCAN* II is made of can be found in the manual Part 2 - Specific Description

Note:

Separate data sheets are issued for the characteristics of a 3-axis configuration, since the vario*SCAN* II can be combined with a variety of XY scan systems, objectives and different correction files.