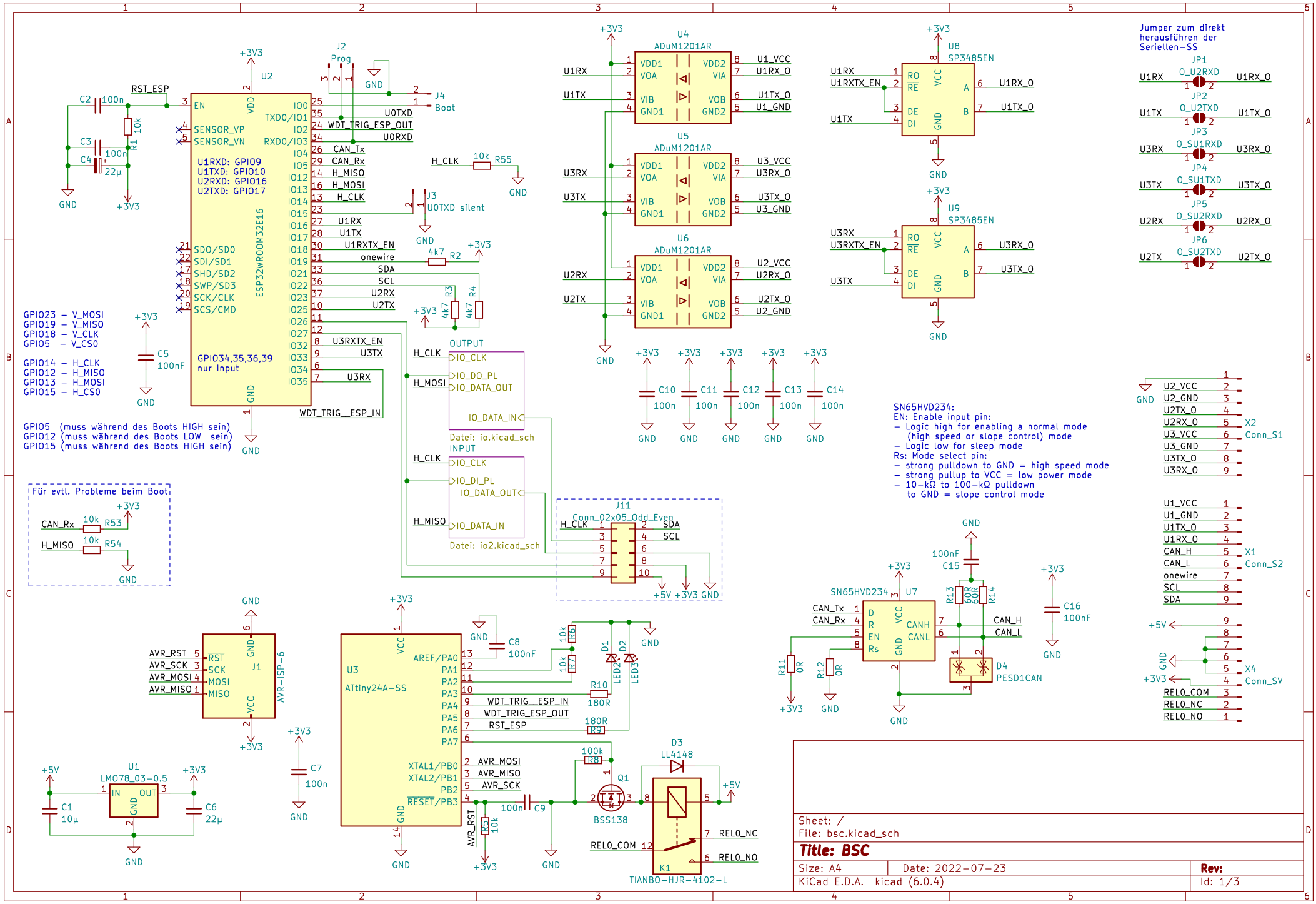

Sheet: /
File: bsc.kicad_sch

Title: BSC

Size: A4	Date: 2022-07-23	Rev:
KiCad E.D.A. kicad (6.0.4)		Id: 1/3

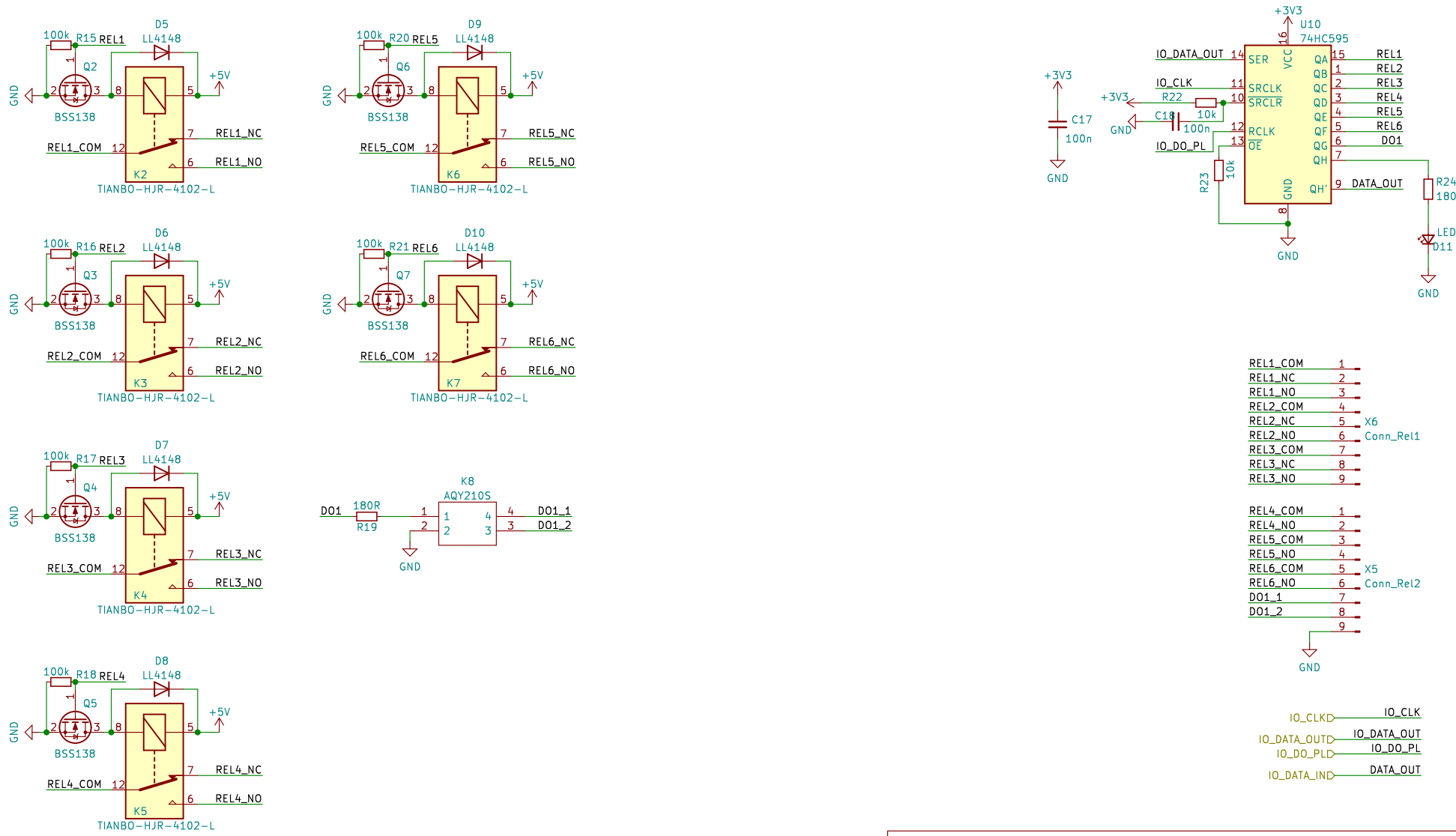

Sheet: /OUTPUT/
File: io.kicad_sch

Title: BSC

Size: A4	Date: 2022-07-23	Rev:
KiCad E.D.A. kicad (6.0.4)		Id: 2/3

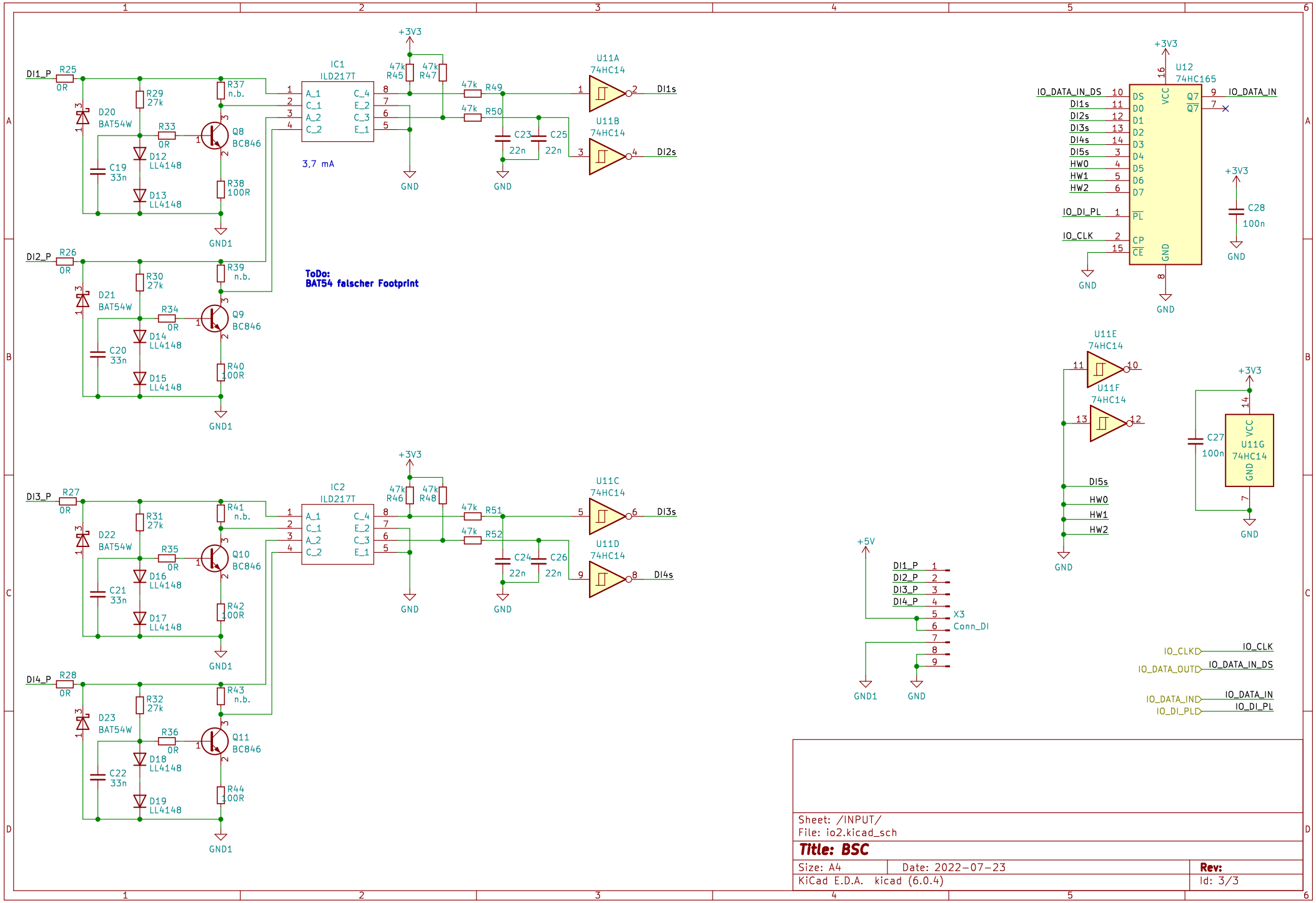

Sheet: /INPUT/
File: io2.kicad_sch

Title: BSC

Size: A4	Date: 2022-07-23	Rev:
KiCad E.D.A. kicad (6.0.4)		Id: 3/3