ALC5639

Audio Hub/CODEC

for Mobile Devices

Datasheet

Rev. 0.9961

Realtek Semiconductor Corp.

No. 2, Innovation Road II, Hsinchu Science Park, Hsinchu 300, Taiwan

Tel.: +886-3-578-0211. Fax: +886-3-577-6047

www.realtek.com

COPYRIGHT

©2017 Realtek Semiconductor Corp. All rights reserved. No part of this document may be reproduced, transmitted, transcribed, stored in a retrieval system, or translated into any language in any form or by any means without the written permission of Realtek Semiconductor Corp.

DISCLAIMER

Realtek provides this document "as is", without warranty of any kind. Realtek may make improvements and/or changes in this document or in the product described in this document at any time. This document could include technical inaccuracies or typographical errors.

TRADEMARKS

Realtek is a trademark of Realtek Semiconductor Corporation. Other names mentioned in this document are trademarks/registered trademarks of their respective owners.

USING THIS DOCUMENT

This document is intended for the hardware and software engineer's general information on the Realtek ALC5639 Audio Codec IC.

Though every effort has been made to ensure that this document is current and accurate, more information may have become available subsequent to the production of this guide.

REVISION HISTORY

Revision	Release Date	Summary
0.1	2011/12/08	Preliminary version
0.9	2012/7/13	Modify control registers Modify function block
0.91	2012/11/29	Modify features Modify typos
0.92	2012/12/11	Modify function block
0.93	2013/1/8	Modify application circuit
0.94	2013/1/15	Modify registers
0.95	2013/2/8	Modify registers
0.96	2013/2/26	Add power sequences for some application cases
0.97	2013/3/18	Add digital microphone interface timing Modify power sequence
0.98	2013/4/1	Modify power sequence
0.99	2013/5/6	Modify registers
0.991	2015/4/7	Modify LDO1_EN pin description
0.992	2015/6/1	Add jack detection flow
0.993	2015/7/24	Modify digital pin characteristic Update Analog JD threshold voltage
0.994	2015/12/30	Modify typos Add timing spec for I2C standard mode
0.995	2016/6/28	Add package thermal data Add EQ pre/post volume control Add Class-D over-current threshold control Add chip over-temperature threshold value
0.996	2016/12/20	Modify power sequence for DBVDD=3.3V condition
0.9961	2017/1/5	Modify MX-61h register table

Table of Contents

1. GENERAL DESCRIPTION 1

2. FEATURES 2

3. SYSTEM APPLICATION 3

4. FUNCTION BLOCK AND MIXER PATH 4

4.1. FUNCTION BLOCK 4
4.2. AUDIO MIXER PATH 5
4.3. DIGITAL MIXER PATH 6

5. PIN ASSIGNMENTS 7

6. PIN DESCRIPTIONS 8

6.1. DIGITAL I/O PINS 8
6.2. ANALOG I/O PINS 9
6.3. FILTER/REFERENCE 10
6.4. POWER/GROUND 10

7. FUNCTION DESCRIPTION 11

7.1. POWER 11
7.2. POWER SUPPLY ON/OFF SEQUENCE 12
7.3. RESET 15
7.3.1. Power-On Reset (POR) 15
7.3.2. Software Reset 15
7.4. CLOCKING 16
7.4.1. Phase-Locked Loop 17
7.4.2. I^2C and Two I^2S/PCM Interface 18
7.5. DIGITAL DATA INTERFACE 19
7.5.1. Two I^2S/PCM Interface 19
7.6. AUDIO DATA PATH 22
7.6.1. 2 Analog ADCs with 4-Channel Record Path 22
7.6.2. 2 DACs with 2-Channel Playback Path 23
7.6.3. Mixers 24
7.7. ANALOG AUDIO INPUT PORT 25
7.8. ANALOG AUDIO OUTPUT PORT 26
7.9. DRC AND AGC FUNCTION 28
7.10. SPEAKER AMPLIFIER RATIO GAIN 31
7.11. EQUALIZER BLOCK 32
7.12. WIND FILTER 32
7.13. I^2C CONTROL INTERFACE 35
7.13.1. Address Setting 35
7.13.2. Complete Data Transfer 35
7.14. GPIO, INTERRUPT AND JACK DETECTION 37
7.15. POWER MANAGEMENT 40
7.16. PROGRAMMABLE REGISTER ARRAY 41

8. REGISTERS LIST 42

8.1. REGISTER MAP 42
8.2. MX-00H: S/W RESET & DEVICE ID 45
8.3. MX-01H: SPEAKER OUTPUT CONTROL 45

8.4. MX-02H: HEADPHONE OUTPUT CONTROL 47
8.5. MX-03H: LINE OUTPUT CONTROL 48
8.6. MX-0DH: IN1 INPUT CONTROL 50
8.7. MX-0EH: IN2 INPUT CONTROL 51
8.8. MX-0FH: INL & INR VOLUME CONTROL 51
8.9. MX-19H: DACL/R DIGITAL VOLUME 52
8.10. MX-1CH: STEREO ADC DIGITAL VOLUME CONTROL 54
8.11. MX-1DH: MONO ADC DIGITAL VOLUME CONTROL 55
8.12. MX-1EH: ADC DIGITAL BOOST GAIN CONTROL 57
8.13. MX-27H: STEREO ADC DIGITAL MIXER CONTROL 57
8.14. MX-28H: MONO ADC DIGITAL MIXER CONTROL 58
8.15. MX-29H: STEREO ADC TO DAC DIGITAL MIXER CONTROL 59
8.16. MX-2AH: STEREO DAC DIGITAL MIXER CONTROL 59
8.17. MX-2BH: MONO DAC DIGITAL MIXER CONTROL 60
8.18. MX-2CH: DAC DIGITAL MIXER CONTROL 61
8.19. MX-2FH: INTERFACE DAC/ADC DATA CONTROL 62
8.20. MX-3BH: RECMIXL CONTROL 1 62
8.21. MX-3CH: RECMIXL CONTROL 2 63
8.22. MX-3DH: RECMIXR CONTROL 1 64
8.23. MX-3EH: RECMIXR CONTROL 2 65
8.24. MX-45H: HPOMIX CONTROL 65
8.25. MX-46H: SPKMIXL CONTROL 66
8.26. MX-47H: SPKMIXR CONTROL 67
8.27. MX-48H: SPOLMIX CONTROL 68
8.28. MX-49H: SPORMIX CONTROL 68
8.29. MX-4AH: SPOL/RMIX GAIN CONTROL 69
8.30. MX-4DH: OUTMIXL CONTROL 1 69
8.31. MX-4EH: OUTMIXL CONTROL 2 70
8.32. MX-4FH: OUTMIXL CONTROL 3 70
8.33. MX-50H: OUTMIXR CONTROL 1 71
8.34. MX-51H: OUTMIXR CONTROL 2 72
8.35. MX-52H: OUTMIXR CONTROL 3 72
8.36. MX-53H: LOUTMIX CONTROL 73
8.37. MX-61H: POWER MANAGEMENT CONTROL 1 73
8.38. MX-62H: POWER MANAGEMENT CONTROL 2 74
8.39. MX-63H: POWER MANAGEMENT CONTROL 3 74
8.40. MX-64H: POWER MANAGEMENT CONTROL 4 75
8.41. MX-65H: POWER MANAGEMENT CONTROL 5 76
8.42. MX-66H: POWER MANAGEMENT CONTROL 6 76
8.43. MX-6AH: PRIVATE REGISTER INDEX 77
8.44. MX-6CH: PRIVATE REGISTER DATA 77
8.45. MX-70H: I2S1 DIGITAL INTERFACE CONTROL 78
8.46. MX-71H: I2S2 DIGITAL INTERFACE CONTROL 79
8.47. MX-73H: ADC/DAC CLOCK CONTROL 80
8.48. MX-75H: DIGITAL MICROPHONE CONTROL 81
8.49. MX-80H: GLOBAL CLOCK CONTROL 81
8.50. MX-81H: PLL CONTROL 1 82
8.51. MX-82H: PLL CONTROL 2 82
8.52. MX-83H: ASRC CONTROL 1 83
8.53. MX-84H: ASRC CONTROL 2 83
8.54. MX-85H: ASRC CONTROL 3 84
8.55. MX-89H: ASRC CONTROL 4 84
8.56. MX-8AH: ASRC CONTROL 5 85
8.57. MX-8CH: CLASS-D AMP OC CONTROL 85
8.58. MX-8DH: CLASS-D AMP OUTPUT CONTROL 86

8.59. MX-8EH: HP AMP CONTROL 1 86
8.60. MX-91H: HP AMP CONTROL 2 87
8.61. MX-92H: SPKVDD DETECTION CONTROL 88
8.62. MX-93H: MICBIAS CONTROL 88
8.63. MX-B0H: EQ CONTROL 1 89
8.64. MX-B1H: EQ CONTROL 2 90
8.65. MX-B4H: DRC/AGC CONTROL 1 91
8.66. MX-B5H: DRC/AGC CONTROL 2 92
8.67. MX-B6H: DRC/AGC CONTROL 3 94
8.68. MX-BBH: JACK DETECTION CONTROL 95
8.69. MX-BDH: IRQ CONTROL 1 96
8.70. MX-BEH: IRQ CONTROL 2 96
8.71. MX-BFH: GPIO AND INTERNAL STATUS 97
8.72. MX-C0H: GPIO CONTROL 1 97
8.73. MX-C2H: GPIO CONTROL 2 98
8.74. MX-C8H: PROGRAMMABLE REGISTER ARRAY CONTROL 1 98
8.75. MX-C9H: PROGRAMMABLE REGISTER ARRAY CONTROL 2 99
8.76. MX-CAH: PROGRAMMABLE REGISTER ARRAY CONTROL 3 99
8.77. MX-CBH: PROGRAMMABLE REGISTER ARRAY CONTROL 4 99
8.78. MX-CCH: PROGRAMMABLE REGISTER ARRAY CONTROL 5 100
8.79. MX-D3H: WIND FILTER CONTROL – ENABLE/DISABLE 100
8.80. MX-D6H:HP AMP CONTROL 101
8.81. MX-D9H: SOFT VOLUME & ZCD CONTROL 101
8.82. MX-FAH: GENERAL CONTROL 1 102
8.83. MX-FBH: GENERAL CONTROL 2 103
8.84. PR-3AH: DIGITAL IO DRIVING CONTROL 104
8.85. PR-3DH: ADC/DAC RESET CONTROL 104
8.86. PR-6EH: WIND FILTER FC CONTROL 104
8.87. PR-A0H: EQ LOW PASS FILTER COEFFICIENT (LPF:A1) 105
8.88. PR-A1H: EQ LOW PASS FILTER GAIN (LPF:H0) 105
8.89. PR-A2H: EQ BAND 1 COEFFICIENT (BPF1:A1) 105
8.90. PR-A3H: EQ BAND 1 COEFFICIENT (BPF1:A2) 105
8.91. PR-A4H: EQ BAND 1 GAIN (BPF1:H0) 106
8.92. PR-A5H: EQ BAND 2 COEFFICIENT (BPF2:A1) 106
8.93. PR-A6H: EQ BAND 2 COEFFICIENT (BPF2:A2) 106
8.94. PR-A7H: EQ BAND 2 GAIN (BPF2:H0) 106
8.95. PR-A8H: EQ BAND 3 COEFFICIENT (BPF3:A1) 107
8.96. PR-A9H: EQ BAND 3 COEFFICIENT (BPF3:A2) 107
8.97. PR-AAH: EQ BAND 3 GAIN (BPF3:H0) 107
8.98. PR-ABH: EQ BAND 4 COEFFICIENT (BPF4:A1) 107
8.99. PR-ACH: EQ BAND 4 COEFFICIENT (BPF4:A2) 108
8.100. PR-ADH: EQ BAND 4 GAIN (BPF4:H0) 108
8.101. PR-AEH: EQ HIGH PASS FILTER 1 COEFFICIENT (HPF1:A1) 108
8.102. PR-AFH: EQ HIGH PASS FILTER 1 GAIN (HPF1:H0) 108
8.103. PR-B0H: EQ HIGH PASS FILTER 2 COEFFICIENT (HPF2:A1) 109
8.104. PR-B1H: EQ HIGH PASS FILTER 2 COEFFICIENT (HPF2:A2) 109
8.105. PR-B2H: EQ HIGH PASS FILTER 2 GAIN (HPF2:H0) 109
8.106. PR-B3H: EQ PRE-VOLUME CONTROL 109
8.107. PR-B4H: EQ POST VOLUME CONTROL 110
8.108. MX-FEH: VENDOR ID 110

9. ELECTRICAL CHARACTERISTICS 111

9.1. DC CHARACTERISTICS 111
9.1.1. Absolute Maximum Ratings 111
9.1.2. Recommended Operating Conditions 111

9.1.3. Static Characteristics *111*
9.2. ANALOG PERFORMANCE CHARACTERISTICS 112
9.3. SIGNAL TIMING 114
9.3.1. I^2C Control Interface *114*
9.3.2. I^2S/PCM Interface Master Mode *115*
9.3.3. I^2S/PCM Interface Slave Mode *116*
9.3.4. Digital Microphone Interface *117*

10. APPLICATION CIRCUITS 118

11. PACKAGE THERMAL DATA 120

12. MECHANICAL DIMENSIONS 121

13. ORDERING INFORMATION 122

List of Tables

TABLE 1. DIGITAL I/O PINS 8
TABLE 2. ANALOG I/O PINS 9
TABLE 3. FILTER/REFERENCE 10
TABLE 4. POWER/GROUND 10
TABLE 5. POWER SUPPLY FOR BEST PERFORMANCE 11
TABLE 6. POWER SUPPLY CONDITION FOR POWER DOWN LEAKAGE 11
TABLE 7. RESET OPERATION 15
TABLE 8. POWER-ON RESET VOLTAGE 15
TABLE 9. CLOCK SETTING TABLE FOR 48K (UNIT: MHZ) 17
TABLE 10. CLOCK SETTING TABLE FOR 44.1K (UNIT: MHZ) 17
TABLE 11. RATION GAIN TABLE FOR SPKVDD AND AVDD 31
TABLE 12. SAMPLE RATE WITH FILTER COEFFICIENT FOR WIND FILTER 33
TABLE 13. ADDRESS SETTING (0X38H) 35
TABLE 14. WRITE WORD PROTOCOL 36
TABLE 15. READ WORD PROTOCOL 36
TABLE 16. PROGRAMMABLE REGISTER TABLE 41
TABLE 17. REGISTER MAP 42
TABLE 18. MX-00H: S/W RESET & DEVICE ID 45
TABLE 19. MX-01H: SPEAKER OUTPUT CONTROL 45
TABLE 20. MX-02H: HEADPHONE OUTPUT CONTROL 47
TABLE 21. MX-03H: LINE OUTPUT CONTROL 48
TABLE 22. MX-0DH: IN1 INPUT CONTROL 50
TABLE 23. MX-0EH: IN2 INPUT CONTROL 51
TABLE 24. MX-0FH: INL & INR VOLUME CONTROL 51
TABLE 25. MX-19H: DACL1/R1 DIGITAL VOLUME 52
TABLE 26. MX-1CH: STEREO ADC DIGITAL VOLUME CONTROL 54
TABLE 27. MX-1DH: MONO ADC DIGITAL VOLUME CONTROL 55
TABLE 28. MX-1EH: ADC DIGITAL BOOST GAIN CONTROL 57
TABLE 29. MX-27H: STEREO ADC DIGITAL MIXER CONTROL 57
TABLE 30. MX-28H: MONO ADC DIGITAL MIXER CONTROL 58
TABLE 31. MX-29H: STEREO ADC TO DAC DIGITAL MIXER CONTROL 59
TABLE 32. MX-2AH: STEREO DAC DIGITAL MIXER CONTROL 59
TABLE 33. MX-2BH: MONO DAC DIGITAL MIXER CONTROL 60
TABLE 34. MX-2CH: DAC DIGITAL MIXER CONTROL 61
TABLE 35. MX-2FH: INTERFACE DAC/ADC DATA CONTROL 62
TABLE 36. MX-3BH: RECMIXL CONTROL 1 62
TABLE 37. MX-3CH: RECMIXL CONTROL 2 63
TABLE 38. MX-3DH: RECMIXR CONTROL 1 64
TABLE 39. MX-3EH: RECMIXR CONTROL 2 65
TABLE 40. MX-45H: HPOMIX CONTROL 65
TABLE 41. MX-46H: SPKMIXL CONTROL 66
TABLE 42. MX-47H: SPKMIXR CONTROL 67
TABLE 43. MX-48H: SPOLMIX CONTROL 68
TABLE 44. MX-49H: SPORMIX CONTROL 68
TABLE 45. MX-4AH: SPOL/RMIX GAIN CONTROL 69
TABLE 46. MX-4DH: OUTMIXL CONTROL 1 69
TABLE 47. MX-4EH: OUTMIXL CONTROL 2 70
TABLE 48. MX-4FH: OUTMIXL CONTROL 3 70
TABLE 49. MX-50H: OUTMIXR CONTROL 1 71
TABLE 50. MX-51H: OUTMIXR CONTROL 2 72
TABLE 51. MX-52H: OUTMIXR CONTROL 3 72
TABLE 52. MX-53H: LOUTMIX CONTROL 73

TABLE 53. MX-61H: POWER MANAGEMENT CONTROL 1 73
TABLE 54. MX-62H: POWER MANAGEMENT CONTROL 2 74
TABLE 55. MX-63H: POWER MANAGEMENT CONTROL 3 74
TABLE 56. MX-64H: POWER MANAGEMENT CONTROL 4 75
TABLE 57. MX-65H: POWER MANAGEMENT CONTROL 5 76
TABLE 58. MX-66H: POWER MANAGEMENT CONTROL 6 76
TABLE 59. MX-6AH: PRIVATE REGISTER INDEX 77
TABLE 60. MX-6CH: PRIVATE REGISTER DATA 77
TABLE 61. MX-70H: I2S1 DIGITAL INTERFACE CONTROL 78
TABLE 62. MX-71H: I2S2 DIGITAL INTERFACE CONTROL 79
TABLE 63. MX-73H: ADC/DAC CLOCK CONTROL 80
TABLE 64. MX-75H: DIGITAL MICROPHONE CONTROL 81
TABLE 65. MX-80H: GLOBAL CLOCK CONTROL 81
TABLE 66. MX-81H: PLL CONTROL 1 82
TABLE 67. MX-82H: PLL CONTROL 2 82
TABLE 68. MX-83H: ASRC CONTROL 1 83
TABLE 69. MX-84H: ASRC CONTROL 2 83
TABLE 70. MX-85H: ASRC CONTROL 3 84
TABLE 71. MX-89H: ASRC CONTROL 4 84
TABLE 72. MX-8AH: ASRC CONTROL 5 85
TABLE 73. MX-8CH: CLASS-D AMP OC CONTROL 85
TABLE 74. MX-8DH: CLASS-D AMP OUTPUT CONTROL 86
TABLE 75. MX-8EH: HP AMP CONTROL 1 86
TABLE 76. MX-91H: HP AMP CONTROL 2 87
TABLE 77. MX-92H: SPKVDD DETECTION CONTROL 88
TABLE 78. MX-93H: MICBIAS CONTROL 88
TABLE 79. MX-B0H: EQ CONTROL 1 89
TABLE 80. MX-B1H: EQ CONTROL 2 90
TABLE 81. MX-B4H: DRC/AGC CONTROL 1 91
TABLE 82. MX-B5H: DRC/AGC CONTROL 2 92
TABLE 83. MX-B6H: DRC/AGC CONTROL 3 94
TABLE 84. MX-BBH: JACK DETECTION CONTROL 95
TABLE 85. MX-BDH: IRQ CONTROL 1 96
TABLE 86. MX-BEH: IRQ CONTROL 2 96
TABLE 87. MX-BFH: GPIO AND INTERNAL STATUS 97
TABLE 88. MX-C0H: GPIO CONTROL 1 97
TABLE 89. MX-C2H: GPIO CONTROL 2 98
TABLE 90. MX-C8H: PROGRAMMABLE REGISTER ARRAY CONTROL 1 98
TABLE 91. MX-C9H: PROGRAMMABLE REGISTER ARRAY CONTROL 2 99
TABLE 92. MX-CAH: PROGRAMMABLE REGISTER ARRAY CONTROL 3 99
TABLE 93. MX-CBH: PROGRAMMABLE REGISTER ARRAY CONTROL 4 99
TABLE 94. MX-CCH: PROGRAMMABLE REGISTER ARRAY CONTROL 5 100
TABLE 95. MX-D3H: WIND FILTER CONTROL – ENABLE/DISABLE 100
TABLE 96. MX-D6H: HP AMP CONTROL 101
TABLE 97. MX-D9H: SOFT VOLUME & ZCD CONTROL 101
TABLE 98. MX-FAH: GENERAL CONTROL 1 102
TABLE 99. MX-FBH: GENERAL CONTROL 2 103
TABLE 110. PR-3AH: DIGITAL IO DRIVING CONTROL 104
TABLE 101. PR-3DH: ADC/DAC RESET CONTROL 104
TABLE 102. PR-6EH: WIND FILTER FC CONTROL 104
TABLE 103. PR-A0H: EQ LOW PASS FILTER COEFFICIENT (LPF:A1) 105
TABLE 104. PR-A1H: EQ LOW PASS FILTER GAIN (LPF:H0) 105
TABLE 105. PR-A2H: EQ BAND 1 COEFFICIENT (BPF1:A1) 105
TABLE 106. PR-A3H: EQ BAND 1 COEFFICIENT (BPF1:A2) 105
TABLE 107. PR-A4H: EQ BAND 1 GAIN (BPF1:H0) 106

TABLE 108. PR-A5H: EQ BAND 2 COEFFICIENT (BPF2:A1) 106
TABLE 109. PR-A6H: EQ BAND 2 COEFFICIENT (BPF2:A2) 106
TABLE 110. PR-A7H: EQ BAND 2 GAIN (BPF2:H0) 106
TABLE 111. PR-A8H: EQ BAND 3 COEFFICIENT (BPF3:A1) 107
TABLE 112. PR-A9H: EQ BAND 3 COEFFICIENT (BPF3:A2) 107
TABLE 113. PR-AAH: EQ BAND 3 GAIN (BPF3:H0) 107
TABLE 114. PR-ABH: EQ BAND 4 COEFFICIENT (BPF4:A1) 107
TABLE 115. PR-ACH: EQ BAND 4 COEFFICIENT (BPF4:A2) 108
TABLE 116. PR-ADH: EQ BAND 4 GAIN (BPF4:H0) 108
TABLE 117. PR-AEH: EQ HIGH PASS FILTER 1 COEFFICIENT (HPF1:A1) 108
TABLE 118. PR-AFH: EQ HIGH PASS FILTER 1 GAIN (HPF1:H0) 108
TABLE 119. PR-B0H: EQ HIGH PASS FILTER 2 COEFFICIENT (HPF2:A1) 109
TABLE 120. PR-B1H: EQ HIGH PASS FILTER 2 COEFFICIENT (HPF2:A2) 109
TABLE 121. PR-B2H: EQ HIGH PASS FILTER 2 GAIN (HPF2:H0) 109
TABLE 122. PR-B3H: EQ PRE-VOLUME CONTROL 109
TABLE 123. PR-B4H: EQ POST VOLUME CONTROL 110
TABLE 124. MX-FEH: VENDOR ID 110
TABLE 125. ABSOLUTE MAXIMUM RATINGS 111
TABLE 126. RECOMMENDED OPERATING CONDITIONS 111
TABLE 127. STATIC CHARACTERISTICS 111
TABLE 128. ANALOG PERFORMANCE CHARACTERISTICS 112
TABLE 129. I^2C TIMING 114
TABLE 130. TIMING OF I^2S/PCM MASTER MODE 115
TABLE 131. I^2S/PCM SLAVE MODE TIMING 116
TABLE 132. DIGITAL MICROPHONE INTERFACE TIMING 117
TABLE 133. PACKAGE THERMAL DATA 120
TABLE 134. ORDERING INFORMATION 122

List of Figures

FIGURE 1. BLOCK DIAGRAM 4
FIGURE 2. AUDIO MIXER PATH 5
FIGURE 3. DIGITAL MIXER PATH 6
FIGURE 4. PIN ASSIGNMENTS 7
FIGURE 5. POWER ON/OFF SEQUENCE 14
FIGURE 6. AUDIO CLOCK TREE 16
FIGURE 7. PCM MONO DATA MODE A FORMAT (BCLK POLARITY=0) 19
FIGURE 8. PCM MONO DATA MODE A FORMAT (BCLK POLARITY=1) 19
FIGURE 9. PCM MONO DATA MODE B FORMAT (BCLK POLARITY=0) 20
FIGURE 10. PCM STEREO DATA MODE A FORMAT (BCLK POLARITY=0) 20
FIGURE 11. PCM STEREO DATA MODE B FORMAT (BCLK POLARITY=0) 20
FIGURE 12. I^2S DATA FORMAT (BCLK POLARITY=0) 21
FIGURE 13. LEFT-JUSTIFIED DATA FORMAT (BCLK POLARITY=0) 21
FIGURE 14. 4-CHANNEL RECORDING PATH 22
FIGURE 15. 2-CHANNEL PLAYBACK PATH 23
FIGURE 16. SPEAKER OUTPUT MODE – STEREO BTL MODE 26
FIGURE 17. DAC DRC FUNCTION BLOCK 28
FIGURE 18. ADC AGC FUNCTION BLOCK 28
FIGURE 19. DRC/AGC FOR PLAYBACK/RECORDING MODE 29
FIGURE 20. DRC/AGC FOR NOISE GATE MODE 30
FIGURE 21. RATIO GAIN BEHAVIOR FOR SPKVDD AND AVDD 31
FIGURE 22. DATA TRANSFER OVER I^2C CONTROL INTERFACE 35
FIGURE 23. GPIO FUNCTION BLOCK 37
FIGURE 24. IRQ FUNCTION BLOCK 38
FIGURE 25. JD SOURCE SELECTION 39
FIGURE 26. POWER MANAGEMENT 40
FIGURE 27. I^2C CONTROL INTERFACE 114
FIGURE 28. TIMING OF I^2S/PCM MASTER MODE 115
FIGURE 29. I^2S/PCM SLAVE MODE TIMING 116
FIGURE 29. DIGITAL MICROPHONE INTERFACE TIMING 117
FIGURE 30. APPLICATION CIRCUIT 119
FIGURE 31. PACKAGE DIMENSION 121

1. General Description

The ALC5639 is a high performance, low power, dual I^2S interface audio CODEC. Dual I^2S interface can connect to different devices and let the ALC5639 to be an Audio Hub. Each device can pass through the Audio Hub and then perform as input or output application. Asynchronous Sample Rate Converter (ASRC) provides independent and asynchronous connections to different processors, such as an application processor, baseband processor or wireless transceiver(BT).

Stereo Class-D speaker amplifiers provide 1.5W per channel into 8Ω or 2.5W per channel into 4Ω with a 5V supply, with excellent PSRR and low EMI.

The ALC5639 features an ultra low power cap-free headphone amplifier. It consumes only less than 5mW power during playback, providing mobile system longer battery life under headphone listening mode.

The integrated DRC(Dynamic Range Controller) and 7-band parametric Equalizer provide further digital sound processing capability of audio playback paths. The DRC in ALC5639 continuously monitors the DAC output level. When the power level is low, it increases the input signal gain to make it sound louder. At the same time, if a peaking signal is detected, it autonomously reduces the applied gain to avoid hard clipping. It ensures the maximum/consistent signal amplitude without producing audio clipping and speaker damage. The 7-band parametric Equalizer contains 7 independent filters with programmable gain, center frequency and bandwidth to tailor the frequency characteristics of embedded speaker system according to user preferences.

For microphone recording, the DRC in ALC5639 can be used as AGC(Auto Gain Controller) to maintain a constant recording volume. Besides, a dynamic wind reduction filter is built in on recording path. The filter can detect the level of wind noise and on/off dynamically to keep the recording quality.

ALC5639 only requires two voltage supplies and consume ultra low power, making it ideal for mobile devices.

2. Features

Analog Features:

- Digital-to-Analog Converter with 100dBA SNR
- Analog-to-Digital Converter with 94dBA SNR
- Differential analog microphone inputs with boost pre-amplifiers and low noise microphone bias
  - +20/+24/+30/+35/+40/+44/+50/+52 dB microphone boost gain
  - MIC input to ADC with 50dB boost gain, SNR > 66dBA and THD+N < -65dB
  - Adjustable MICBIAS (0.9*MICVDD or 0.75*MICVDD)
- Stereo line inputs
  - Line input to ADC with 0dB gain, SNR >= 94dBA, THD+N <= -83dB
- Stereo line outputs
  - DAC to line output with 0dB gain, SNR >= 100dBA, THD+N <= -86dB
- Stereo BTL (Bridge-Tied-Load) Class-D amplifier
  - 650mW/CH (SPKVDD=3.6V, THD+N < = 1%, 8Ohm Load)
  - 500mW/CH (SPKVDD=3.6V, THD+N < = 0.1%, 8Ohm Load)
  - 1.2W/CH (SPKVDD=5.0V, THD+N < = 1%, 8Ohm Load)
  - 2.5W/CH (SPKVDD=5.0V, THD+N < = 10%, 4Ohm Load)
  - 2.1W/CH (SPKVDD=5.0V, THD+N < = 1%, 4Ohm Load)
  - Auto speaker ratio gain for SPKVDD = 3.3V ~ 5.0V
- Stereo Cap-Free headphone amplifier with ultra low power consumption for playback
  - 20mW/CH (AVDD=CPVDD=1.8V, THD+N <= -80dB, 16/32Ohm Load)
  - Playback power consumption <= 5mW (AVDD=VBVDD=CPVDD=1.8V, 16Ohm, With I2S Clock, Playback Silence)
  - Playback power consumption <= 13mW (AVDD=VBVDD=CPVDD=1.8V, 16Ohm, With I2S Clock, Playback 1mW/CH)
- Audio jack insert/combo jack detection
- Inside PLL can receiver wide range clock input

Digital Features:

- Two 24bit/8kHz ~ 192kHz I^2S/PCM interface for stereo DAC
- Two 24bit/8kHz ~ 192kHz I^2S/PCM interface for stereo ADC
- I^2C control interface
- Two digital microphone interface support
- Asynchronous sample rate converter (ASRC) for each interface
- Programmable register table with two sequencers
- 7-bands flexible equalizer (EQ) for DAC path or ADC path
- Enhanced DRC(Dynamic Range Control)/AGC(Auto Gain Control) function for DAC path or ADC path
- Zero detection and soft volume for pop noise suppression
- Speaker amplifier DC term self-test function for speaker protection

3. System Application

- Smart Phones
- Tablet

4. Function Block and Mixer Path

4.1. Function Block

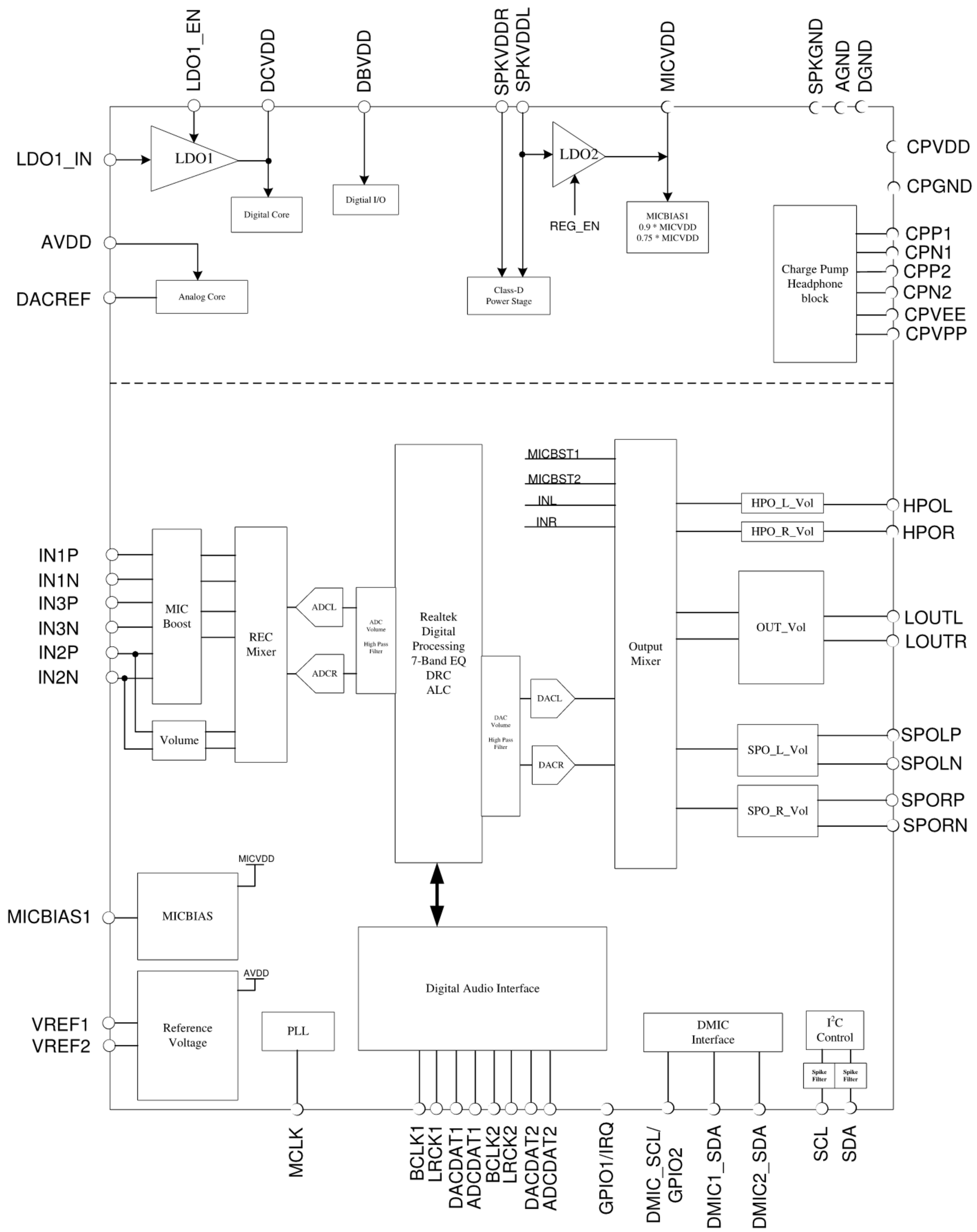

Figure 1. Block Diagram

4.2. Audio Mixer Path

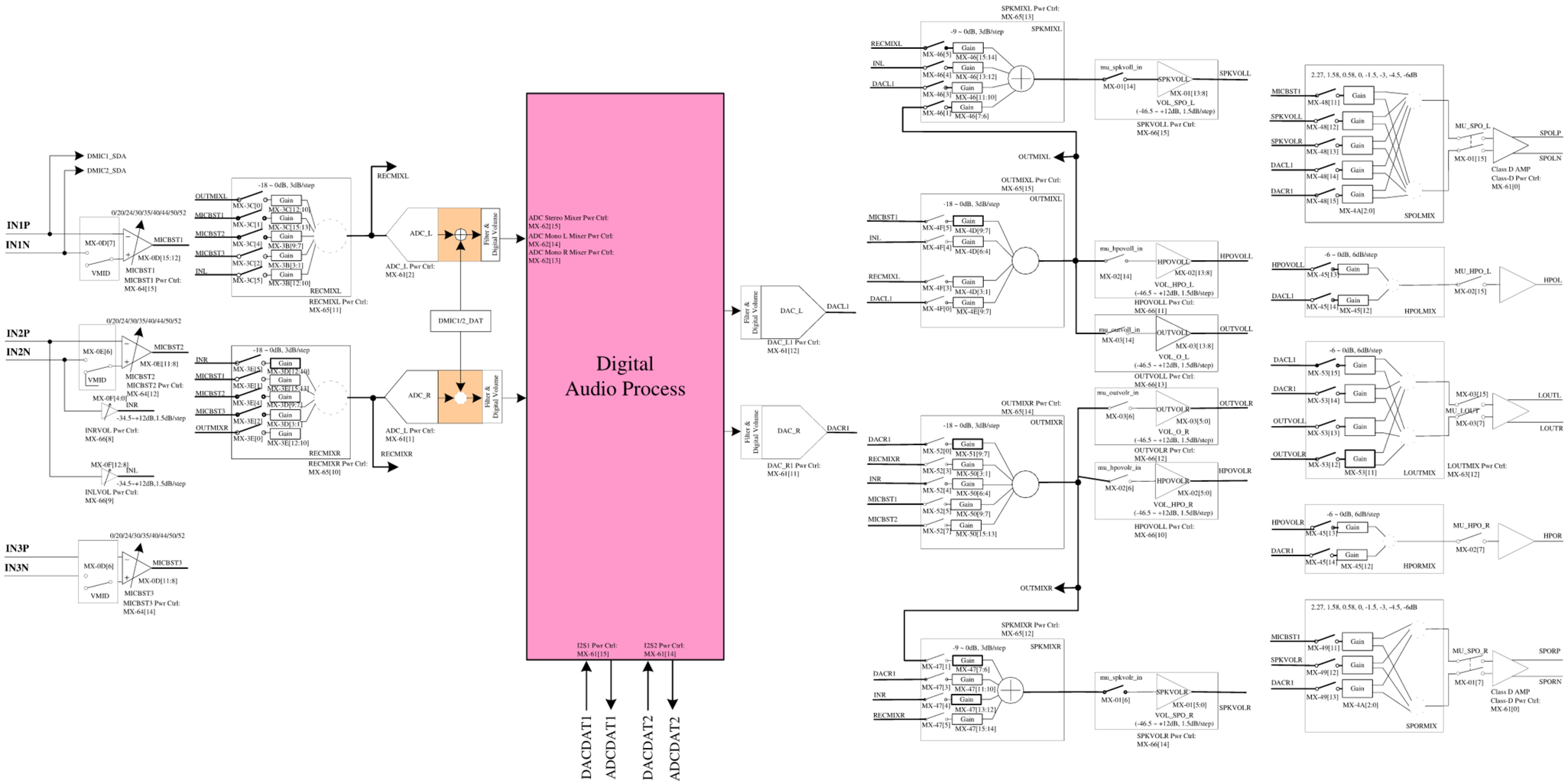

Figure 2. Audio Mixer Path

4.3. Digital Mixer Path

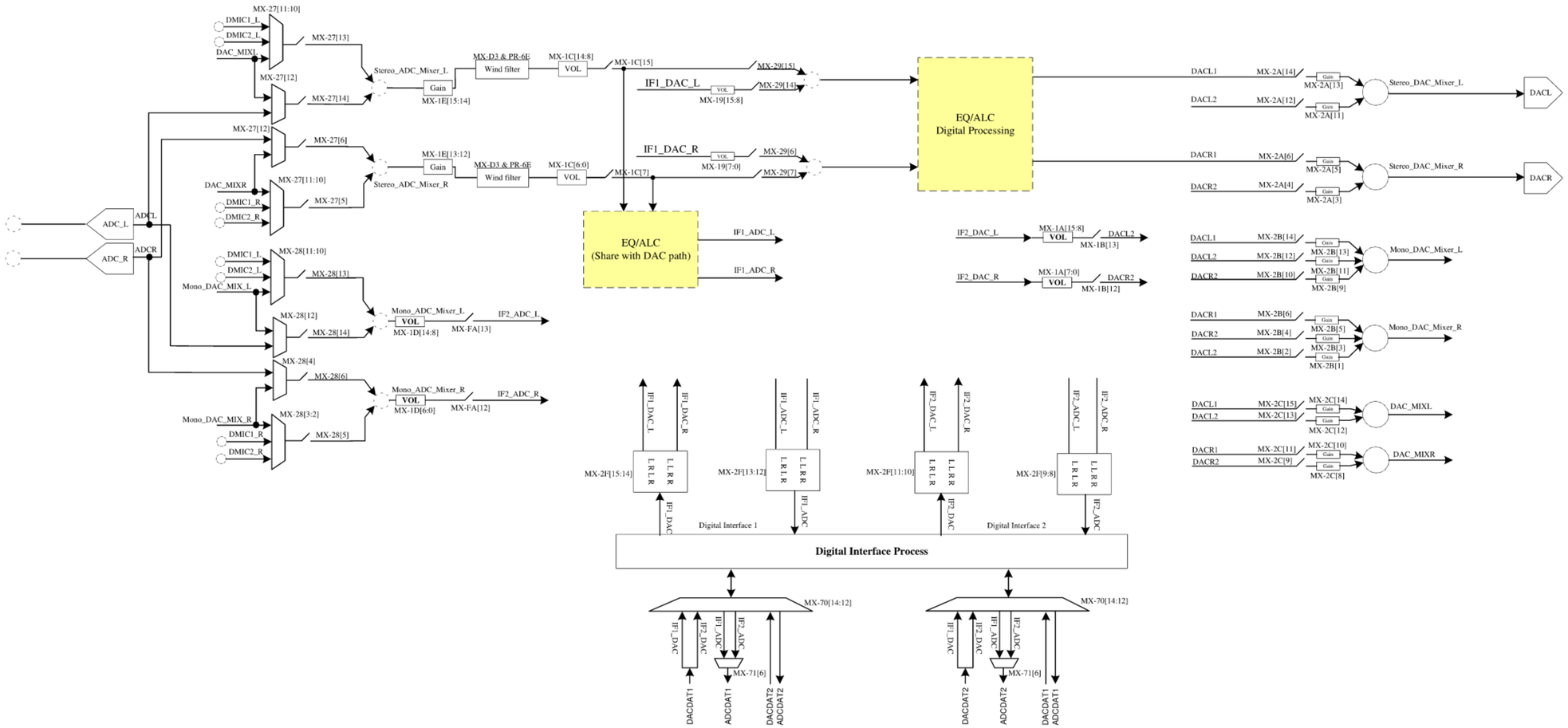

Figure 3. Digital Mixer Path

5. Pin Assignments

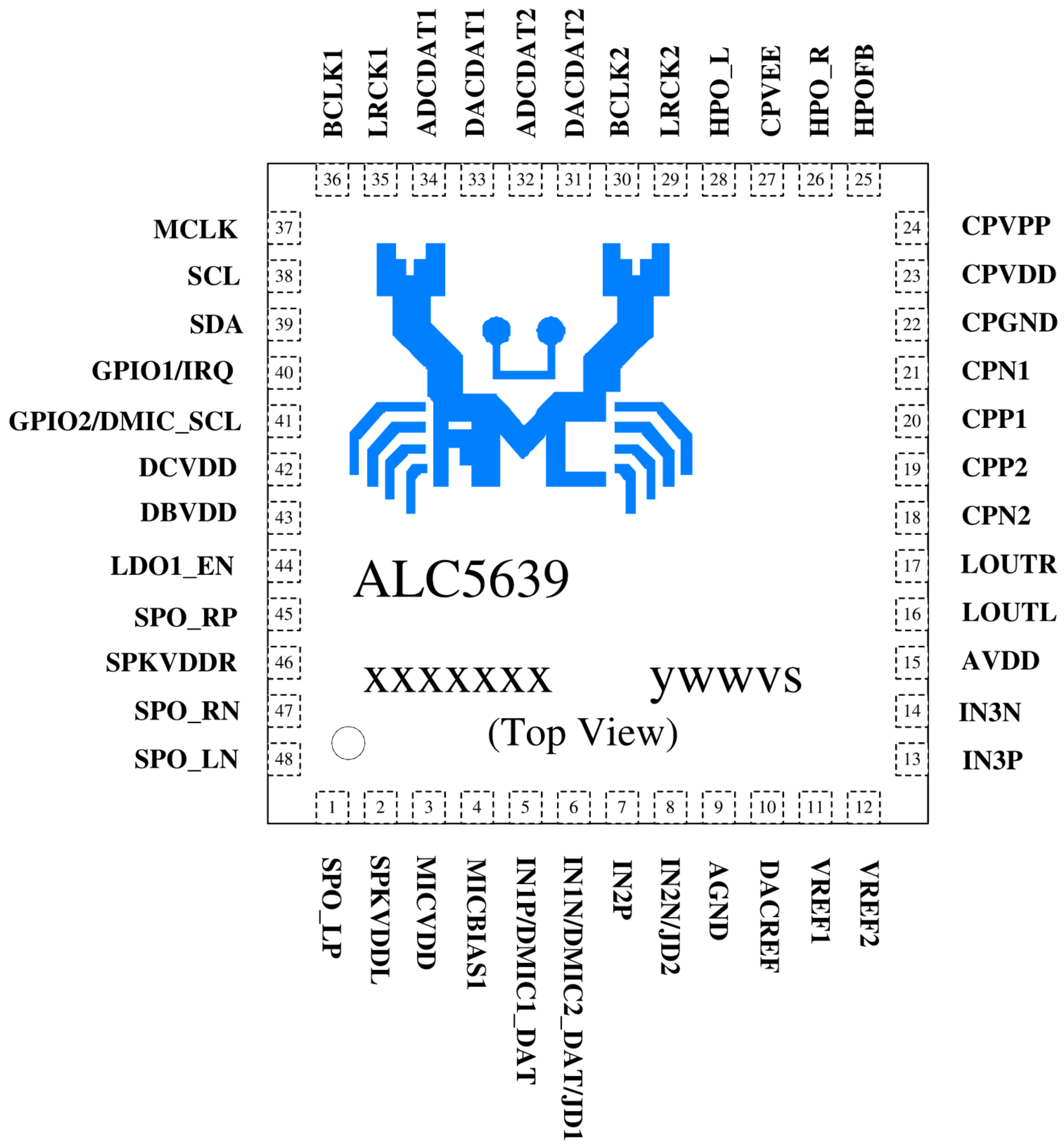

Figure 4. Pin Assignments

6. Pin Descriptions

6.1. Digital I/O Pins

Table 1. Digital I/O Pins

Name	Type	Pin	Description	Characteristic Definition
DACDAT1	I	33	First I2S interface serial data input	Vt = 0.5*DBVDD
ADCDAT1	O	34	First I2S interface serial data output	V_{OL}=0.1*DBVDD, V_{OH}=0.9*DBVDD
BCLK1	I/O	36	First I2S interface serial bit clock	Master: V_{OL} =0.1*DBVDD, V_{OH} =0.9*DBVDD Slave: Vt = 0.5*DBVDD
LRCK1	I/O	35	First I2S interface synchronous signal	Master: V_{OL} =0.1*DBVDD, V_{OH} =0.9*DBVDD Slave: Vt = 0.5*DBVDD
DACDAT2	I	31	Second I2S interface serial data input	Vt = 0.5*DBVDD
ADCDAT2	O	32	Second I2S interface serial data output	V_{OL}=0.1*DBVDD, V_{OH}=0.9*DBVDD
BCLK2	I/O	30	Second I2S interface serial bit clock	Master: V_{OL} =0.1*DBVDD, V_{OH} =0.9*DBVDD Slave: Vt = 0.5*DBVDD
LRCK2	I/O	29	Second I2S interface synchronous signal	Master: V_{OL} =0.1*DBVDD, V_{OH} =0.9*DBVDD Slave: Vt = 0.5*DBVDD
SDA	I/O	39	I2C interface serial data	Open drain structure
SCL	I	38	I2C interface clock input	Open drain structure
MCLK	I	37	I2S interface master clock input	Vt = 0.5*DBVDD
GPIO1/IRQ	I/O	40	General purpose input and output Interrupt output	Output: V_{OL} =0.1*DBVDD, V_{OH} =0.9*DBVDD Input: Vt = 0.5*DBVDD
GPIO2/ DMIC_SCL	I/O	41	General purpose input and output Digital microphone clock output	Output: V_{OL} =0.1*DBVDD, V_{OH} =0.9*DBVDD Input: Vt = 0.5*DBVDD
LDO1_EN	I	44	LDO1 enable control, for digital core power Low: Disable High: Enable	Maximum input voltage is 1.98V Input threshold: V_{IL} = 0.2V V_{IH} = 1.71V
				Total: 14 Pins

6.2. Analog I/O Pins

Table 2. Analog I/O Pins

Name	Type	Pin	Description	Characteristic Definition
LOUTR	O	17	Line output type (single-end output) Right channel	Analog output
LOUTL	O	16	Line output type (single-end output) Left channel	Analog output
IN2P	I	7	Positive differential input for microphone 2 Left channel line input	Analog input
IN2N/JD2	I	8	Negative differential input for microphone 2 Right channel line input Second jack detection pin	Analog input JD threshold: V_{IL} = 0.2V V_{IH} = 0.5V **(If IN2P has used for MIC_IN, the JD2 pull-high voltage will be limited to around 0.9V)**
IN1P/DMIC1_DAT	I	5	Positive differential input for microphone 1 First digital microphone data input	Analog input Digital input
IN1N/DMIC2_DAT/JD1	I	6	Negative differential input for microphone 1 Second digital microphone data input First jack detection pin	Analog input Digital input JD threshold: V_{IL} = 0.2V V_{IH} = 0.5V **(If IN1P has used for MIC_IN, the JD1 pull-high voltage will be limited to around 0.9V)**
HPO_R	O	26	Headphone amplifier output Right channel	Analog output
HPO_L	O	28	Headphone amplifier output Left channel	Analog output
SPO_LP	O	1	Speaker amplifier output Left differential positive output channel	Analog output
SPO_LN	O	48	Speaker amplifier output Left differential negative output channel	Analog output
SPO_RP	O	45	Speaker amplifier output Right differential positive output channel	Analog output
SPO_RN	O	47	Speaker amplifier output Right differential negative output channel	Analog output
IN3P	I	13	Positive differential or single-end input for microphone 3	Analog input
IN3N	I	14	Negative differential input for microphone 3	Analog input
				Total: 14 Pins

6.3. Filter/Reference

Table 3. Filter/Reference

Name	Type	Pin	Description	Characteristic Definition
MICBIAS1	O	4	Bias voltage output for microphone	Programmable analog DC output
VREF1	O	11	First internal reference voltage	4.7uF capacitor to analog ground
VREF2	O	12	Second internal reference voltage	4.7uF capacitor to analog ground
HPOFB	-	25	Headphone reference ground	Headphone ground
CPN1	-	21	First charge pump bucket capacitor	2.2uf capacitor to CPP1
CPP1	-	20	First charge pump bucket capacitor	2.2uf capacitor to CPN1
CPN2	-	18	Second charge pump bucket capacitor	2.2uf capacitor to CPP2
CPP2	-	19	Second charge pump bucket capacitor	2.2uf capacitor to CPN2
				Total: 8 Pins

6.4. Power/Ground

Table 4. Power/Ground

Name	Type	Pin	Description	Characteristic Definition
MICVDD	P	3	Micbias power	3.0V ~ 3.3V
AVDD	P	15	Analog power	1.71V ~ 1.9V
DACREF	P	10	Analog power	1.71V ~ 1.9V
AGND	P	9	Analog ground	
CPVDD	P	23	Charge pump power	1.71V ~ 1.9V
CPGND	P	22	Charge pump ground	
CPVEE	P	27	Charge pump negative voltage output	2.2uf capacitor to analog ground
CPVPP	P	24	Charge pump positive voltage output	2.2uf capacitor to analog ground
DCVDD	P	42	Digital core power	1.1V~1.9V
DBVDD	P	43	Digital I/O power	1.71V~3.3V
SPKVDDL	P	2	Speaker AMP power for left channel	3.0V~5.0V
SPKVDDR	P	46	Speaker AMP power for right channel	3.0V~5.0V
SPKGND/ DGND	P	49*	Speaker AMP ground Digital ground	Exposed-Pad
				Total: 12 Pins

7. Function Description

7.1. Power

There are different power types in ALC5639. DBVDD is for digital I/O power, DCVDD is for digital core power, AVDD/DACREF is for analog power, CPVDD is for charge pump power, MICVDD is for MICBIAS power and SPKVDD is for speaker amplifier power.

The power supplier limit condition are DBVDD ≧ DCVDD and SPKVDD ≧ MICVDD > AVDD = DACREF = CPVDD, AVDD ≧ DCVDD, and for the best performance, our design setting is show on below.

Table 5. Power Supply for Best Performance

Power	DBVDD	DCVDD	AVDD	DACREF	CPVDD	MICVDD	SPKVDD
Setting	1.8V	1.2V	1.8V	1.8V	1.8V	3.3V	5.0V

To prevent all power down leakage, there are three settings for power supply. At these conditions, the leakage will be smaller. First setting is to power on all power pin. Second setting is to only power on SPKVDD and others are removed. The detail setting is shown as following table.

Table 6. Power Supply Condition for Power Down Leakage

Power	DBVDD	DCVDD	AVDD	DACREF	CPVDD	MICVDD	SPKVDD
Setting-1	Supplied	Supplied (or N/A)*	Supplied	Supplied	Supplied	Supplied (or N/A)*	Supplied
Setting-2	N/A	N/A	N/A	N/A	N/A	N/A	Supplied
Setting-3	Supplied	Supplied (or N/A)*	Supplied	Supplied	Supplied	Supplied (or N/A)*	N/A

"*" means DCVDD or MICVDD can be supplied by internal LDO and needs to turn off when into power down mode.

7.2. Power Supply On/Off Sequence

To prevent pop noise and make sure function work normally, following power on and off sequence are recommended.

Case1: For SPKVDD is from battery:

Power On Sequence: (Sequentially turn on power pins)

1. Pull LDO1_EN pin (Pin#44) to DGND (digital ground)
2. SPKVDD power supply on
3. DCVDD power supply on (This step is required if DCVDD is supplied by external 1.2V power. This step and step 7 are exclusive.)
4. DBVDD/AVDD/DACREF/CPVDD=1.8V power supply on
5. Pull LDO1_EN pin (Pin#44) to 1.8V (This step is required if DCVDD is generated by internal LDO. This step and step 3 are exclusive. If DCVDD is supplied by external 1.2V, LDO1_EN must be pulled low.)
6. DBVDD power supply on (This step is required if DBVDD is supplied higher than 1.8V)
7. MICVDD power supply on (This step is required if MICVDD is supplied by external power)
8. Software starts to initialize ALC5639.

Power Off Sequence: (Sequentially turn off power pins)

1. Power down all Codec function (Write 0x0000'h to register MX-00'h)
2. MICVDD power supply off (If MICVDD is supplied by external power)
3. DBVDD power supply off (This step is required if DBVDD is supplied higher than 1.8V)
4. Pull LDO1_EN pin (Pin#44) to DGND (If internal LDO is used to generate DCVDD)
5. DBVDD/AVDD/DACREF/CPVDD power supply off
6. DCVDD power supply off (If DCVDD is supplied by external power)
7. SPKVDD power supply off

Case2: For SPKVDD is from PMIC:

Power On Sequence: (Sequentially turn on power pins)

1. Pull LDO1_EN pin (Pin#44) to DGND (digital ground)
2. DCVDD power supply on (This step is required if DCVDD is supplied by external 1.2V power. This step and step 7 are exclusive.)
3. DBVDD/AVDD/DACREF/CPVDD=1.8V power supply on
4. Pull LDO1_EN pin (Pin#44) to 1.8V (This step is required if DCVDD is generated by internal LDO. This step and step 2 are exclusive. If DCVDD is supplied by external 1.2V, LDO1_EN must be pulled low.)
5. DBVDD power supply on (This step is required if DBVDD is supplied higher than 1.8V)
6. MICVDD power supply on (This step is required if MICVDD is supplied by external power)
7. SPKVDD power supply on
8. Software starts to initialize ALC5639.

Power Off Sequence: (Sequentially turn off power pins)

1. Power down all Codec function (Write 0x0000'h to register MX-00'h)
2. SPKVDD power supply off
3. MICVDD power supply off (If MICVDD is supplied by external power)
4. DBVDD power supply on (This step is required if DBVDD is supplied higher than 1.8V)
5. Pull LDO1_EN pin (Pin#44) to DGND (If internal LDO is used to generate DCVDD)
6. DBVDD/AVDD/DACREF/CPVDD power supply off
7. DCVDD power supply off (If DCVDD is supplied by external power)

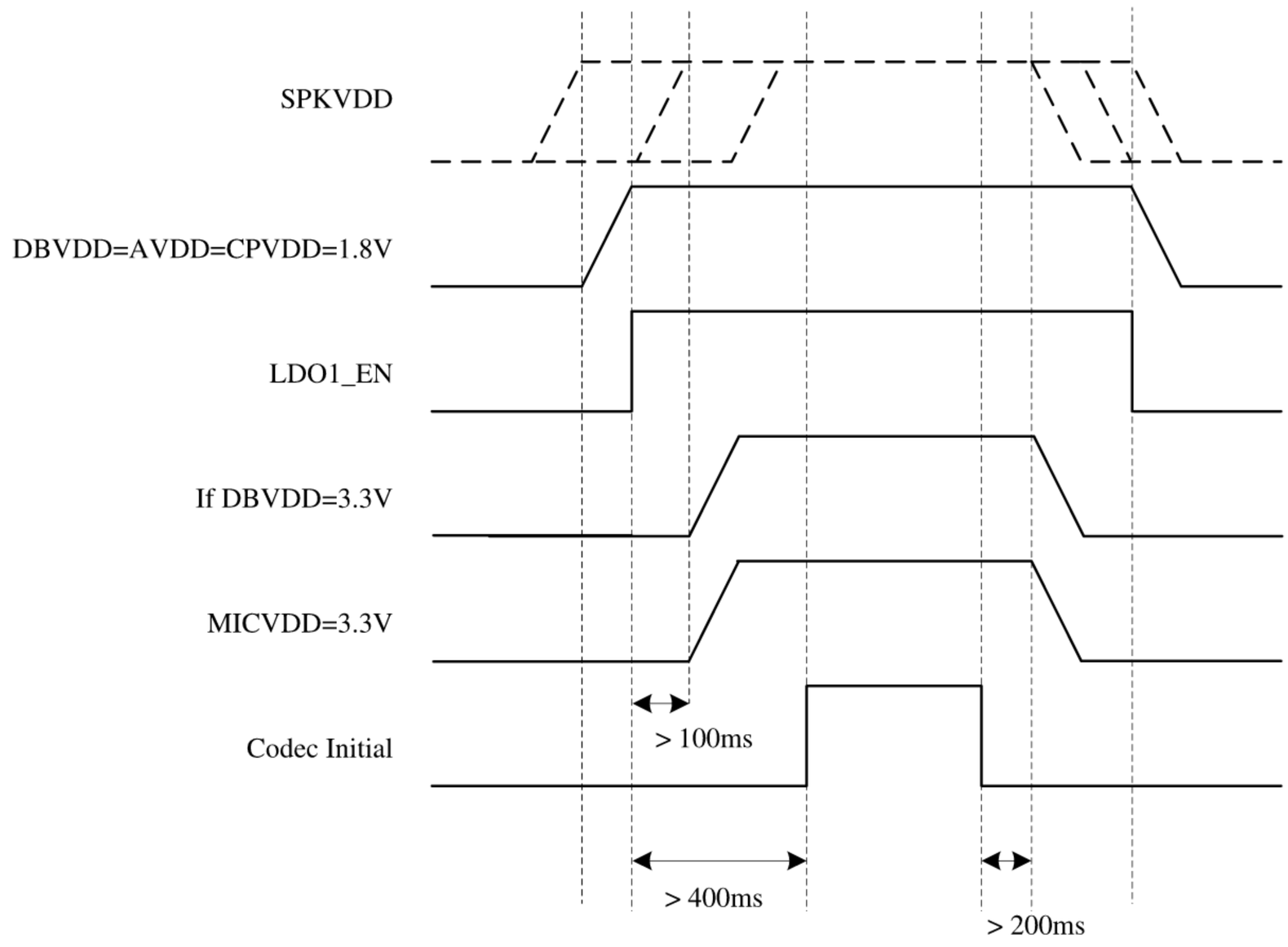

Figure 5. Power On/Off Sequence

7.3. Reset

There are 2 types of reset operation: power on reset (POR) and register reset.

Table 7. Reset Operation

Reset Type	Trigger Condition	CODEC Response
POR	Monitor digital power supply voltage reach V_{POR}	Reset all hardware logic and all registers to default values.
Register Reset	Write MX-00h	Reset all registers to default values except some specify control registers and logic.

7.3.1. Power-On Reset (POR)

When powered on, DCVDD passes through the V_{POR} band of the ALC5639 (V_{POR_ON} ~V_{POR_OFF}). A power on reset (POR) will generate an internal reset signal (POR reset 'LOW') to reset the whole chip.

Table 8. Power-On Reset Voltage

Symbol	Min	Typical	Max	Unit
V_{POR_ON}	-	0.8	-	V
V_{POR_OFF}	-	0.52	-	V

Note:
1.V_{POR_OFF} must be below V_{POR_ON}
2. $T^oC = 25^oC$
3. When DCVDD is supplied 1.2V

7.3.2. Software Reset

When MX-00h is wrote, all registers become to default value.

7.4. Clocking

The system clock of ALC5639 can be selected from MCLK or PLL. MCLK is always provided externally while the reference clock of PLL can be selected from MCLK, BCLK1/2. The driver should arrange the clock of each block and setup each divider.

The Clk_sys_i2s1=256*Fs provides clocks into stereo DAC/ADC filter that can be selected from MCLK or PLL. Refer to Figure 5. Audio SYSCLK
The Clk_sys_i2s2=256*Fs provides clocks into mono DAC/ADC filter that can be selected from MCLK, PLL, refer to Figure 5. Audio SYSCLK

When enable ASRC (Asynchronous Sample Rate Converter) function, the clock sources from MCLK and BCLK1 (or BCLK2) are allowed to be asynchronous. The Realtek ASRC technology can ensure data accuracy and keep audio performance under clock source asynchronous.

When ALC5639 at master mode, the clock source from MCLK will be devided and be sent to external device. The ratio of BCLK and LRCK can set by register – MX-73.

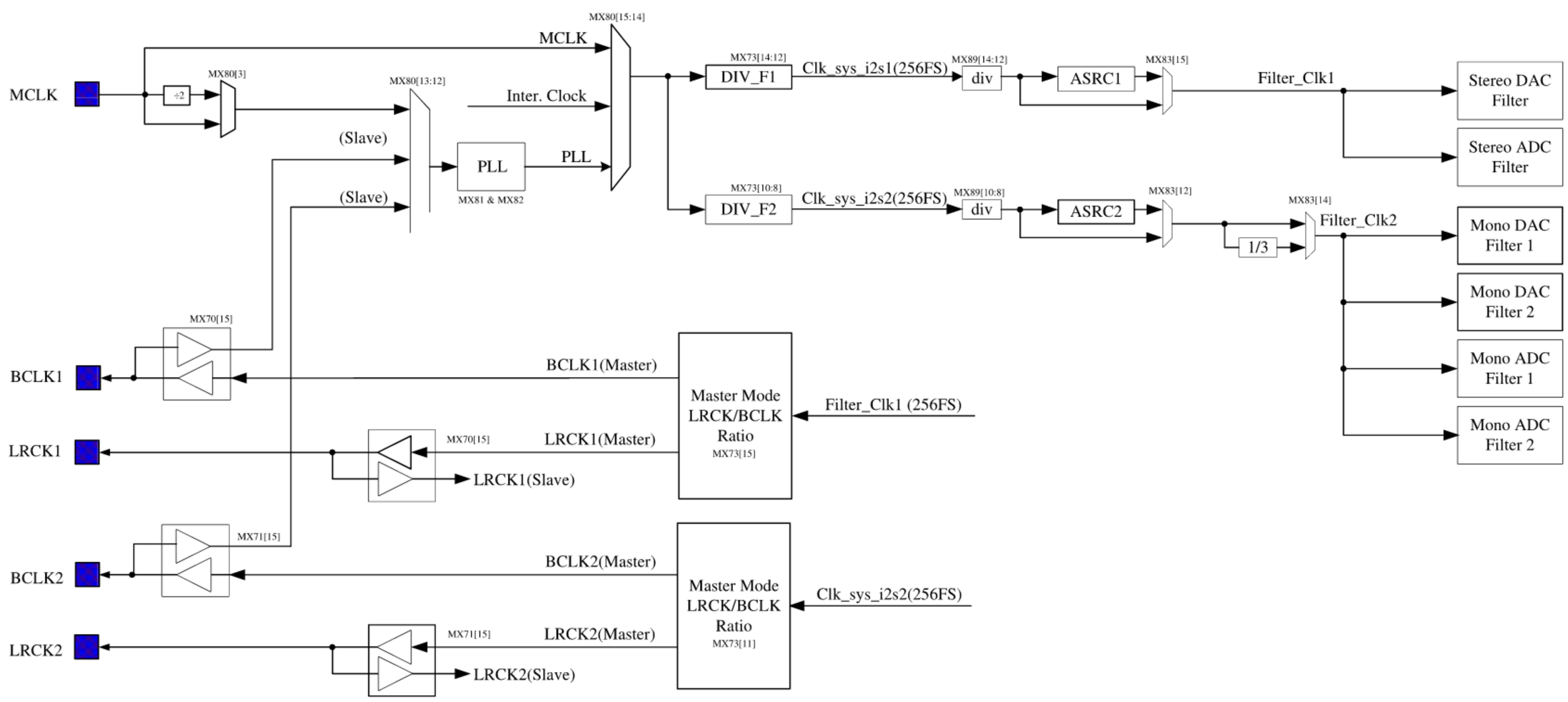

Figure 6. Audio Clock Tree

7.4.1. Phase-Locked Loop

A Phase-Locked Loop (PLL) is used to provide a flexible input clock from 2.048MHz to 40MHz. The source of the PLL can be set to MCLK, BCLK1 or BCLK2 by setting register.

The S/W driver can set up the PLL to output a frequency to match the requirement of system clock.

The PLL transmit formula as below:

F_{OUT} = (MCLK * (N+2)) / ((M+2) * (K+2)) {Typical K=2}

Table 9. Clock Setting Table for 48K (Unit: MHz)

MCLK	N	M	F_{VCO}	K	F_{OUT}
13	66	7	98.222	2	24.555
3.6864	78	1	98.304	2	24.576
2.048	94	0	98.304	2	24.576
4.096	70	1	98.304	2	24.576
12	80	8	98.4	2	24.6
15.36	81	11	98.068	2	24.517
16	78	11	98.462	2	24.615
19.2	80	14	98.4	2	24.6
19.68	78	14	98.4	2	24.6
24	39	8	98.4	2	24.6

Table 10. Clock Setting Table for 44.1K (Unit: MHz)

MCLK	N	M	F_{VCO}	K	F_{OUT}
13	68	8	91	2	22.75
3.6864	72	1	90.931	2	22.733
2.048	86	0	90.112	2	22.528
4.096	64	1	90.112	2	22.528
12	66	7	90.667	2	22.667
15.36	63	9	90.764	2	22.691
16	66	10	90.667	2	22.667
19.2	64	12	90.514	2	22.629
19.68	67	13	90.528	2	22.632
24	62	15	90.352	2	22.588

7.4.2. I^2C and Two I^2S/PCM Interface

The ALC5639 supports I^2C for the digital control interface, and has two I^2S/PCM for digital data interface. These two I^2S/PCM audio digital interfaces are used to send data to 2 DACs or to receive data from a stereo ADC. These two I^2S/PCM audio digital interfaces can be configured to Master mode or Slave mode.

Master Mode

Under master mode, BCLK and LRCK are configured as output. If I2S SYSCLK is selected from MCLK source, sel_sysclk1 (MX-80[15:14]) should set as 00'b. If selected from PLL output, sel_sysclk1 should set as 01'b. PLL's source is suggested to provide frequency from 2.048MHz to 40MHz. The driver should set each divider (MX-73 and MX-89) to arrange the clock distribution. Refer to Figure5. Audio Clock Tree, for details.

Slave Mode

Under slave mode BCLK and LRCK are configured as input. The SYSCLK can be input from MCLK, and BCLK can be synchronous or asynchronous to MCLK. If the SYSCLK is selected from BCLK, the internal PLL should generate 256*FS by BCLK. And the driver should set each divider to arrange the clock distribution. Refer to Figure5. Audio Clock Tree, for details.

7.5. Digital Data Interface

7.5.1. Two I²S/PCM Interface

The two I2S/PCM interface can be configured as master mode or slave mode. Three audio data formats are supported:

- PCM mode
- Left justified mode
- I²S mode

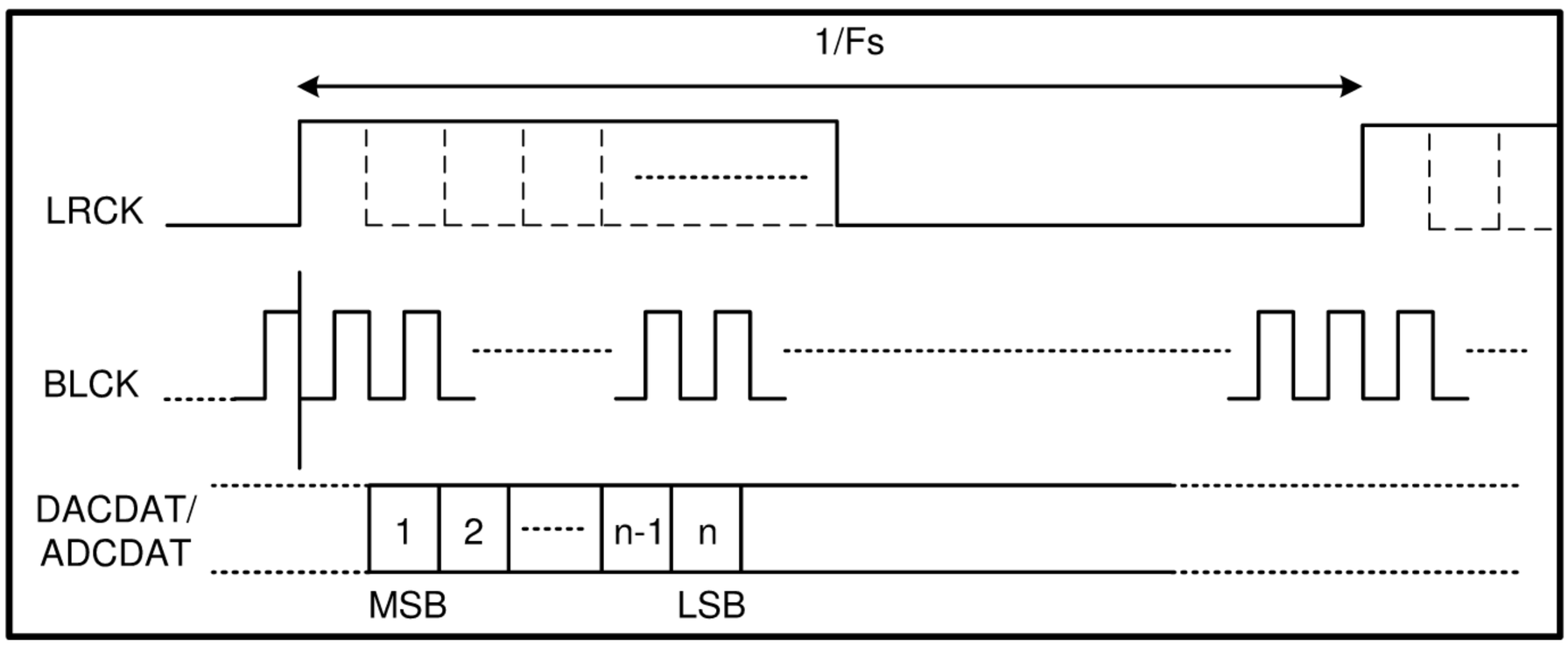

Figure 7. PCM MONO Data Mode A Format (BCLK POLARITY=0)

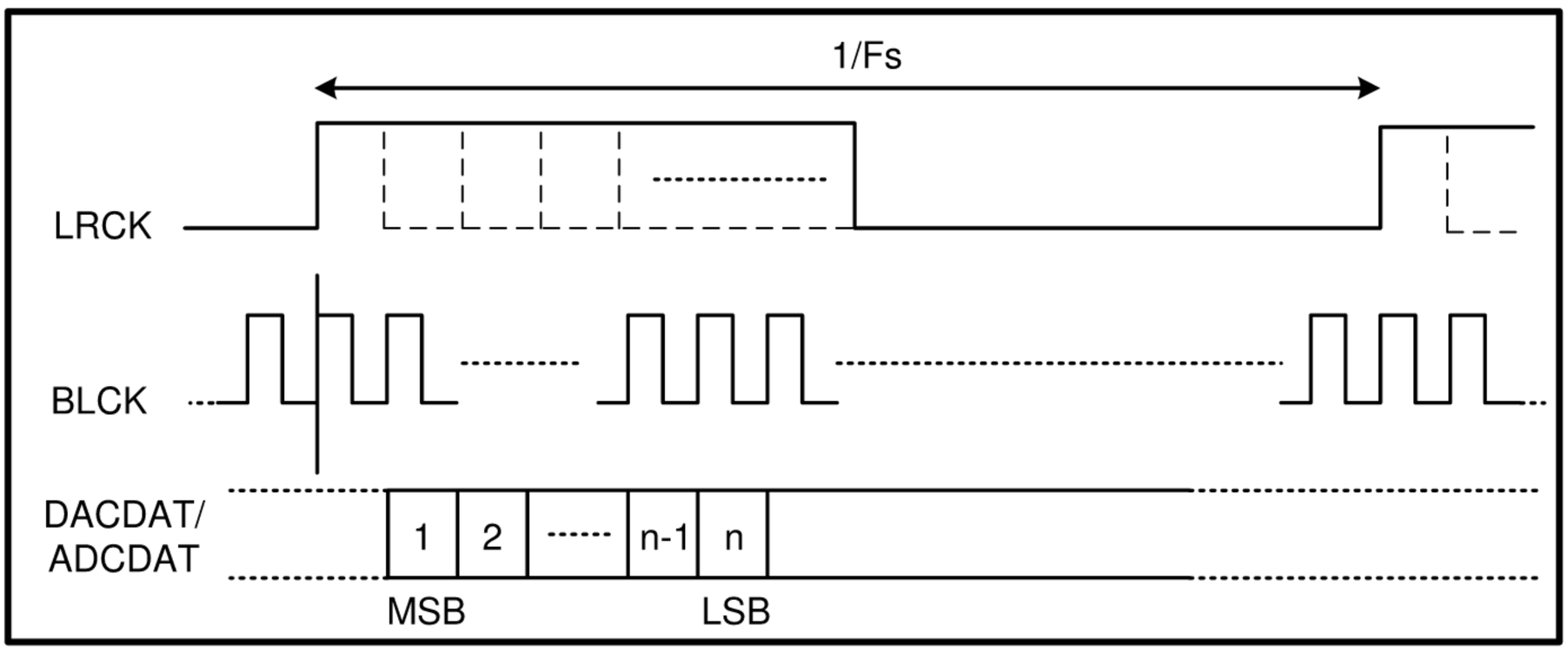

Figure 8. PCM MONO Data Mode A Format (BCLK POLARITY=1)

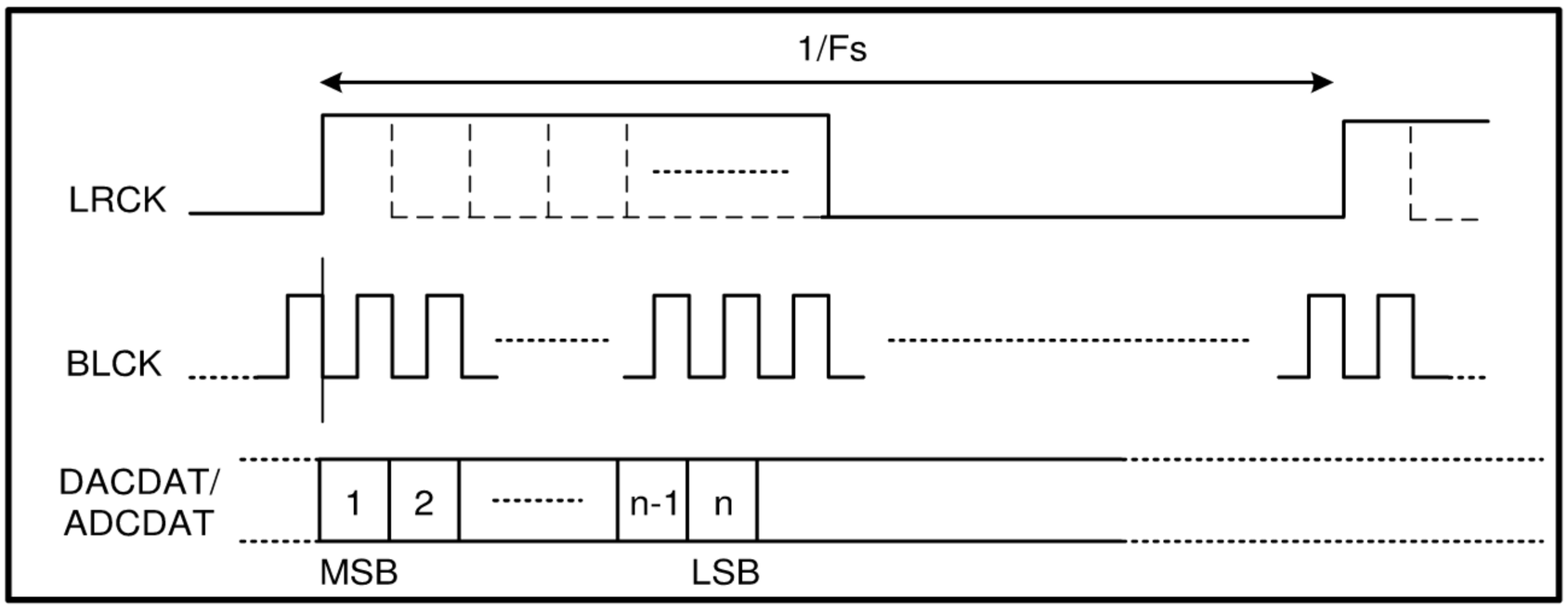

Figure 9. PCM MONO Data Mode B Format (BCLK POLARITY=0)

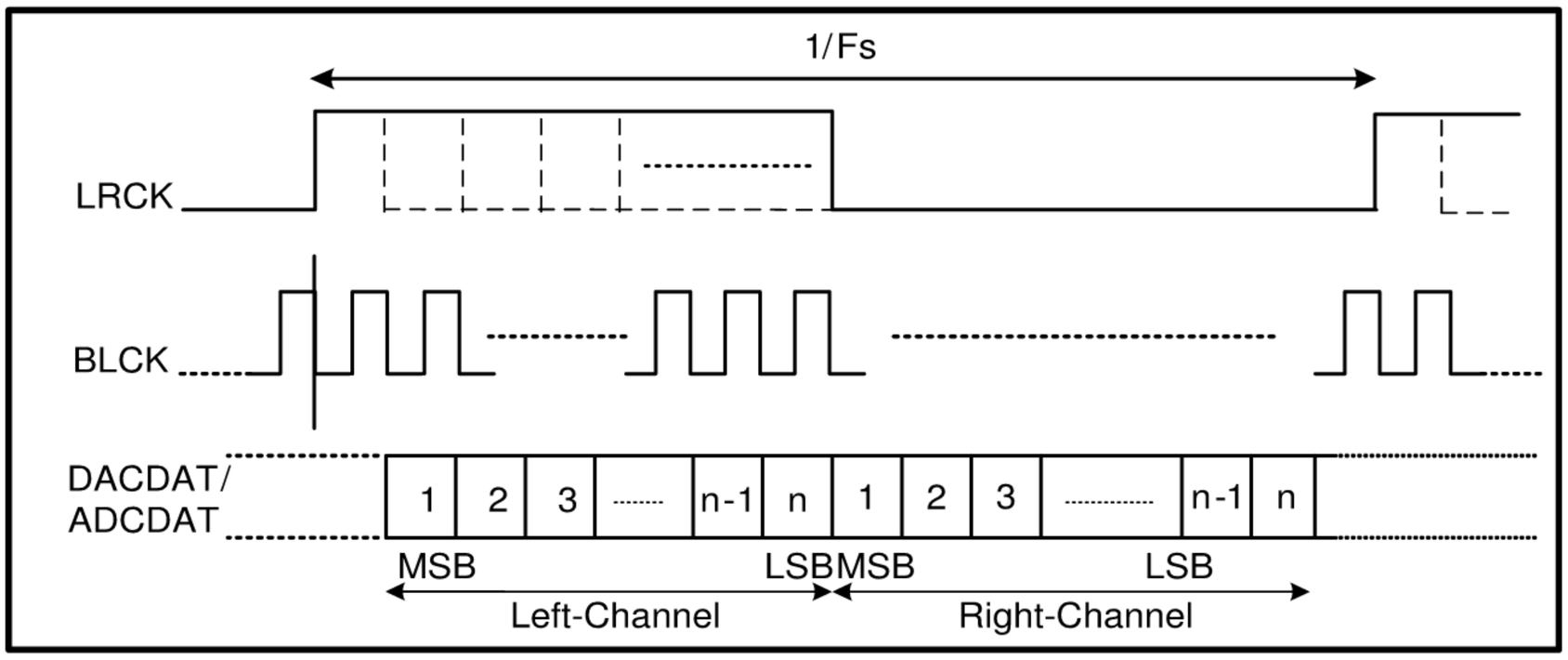

Figure 10. PCM Stereo Data Mode A Format (BCLK POLARITY=0)

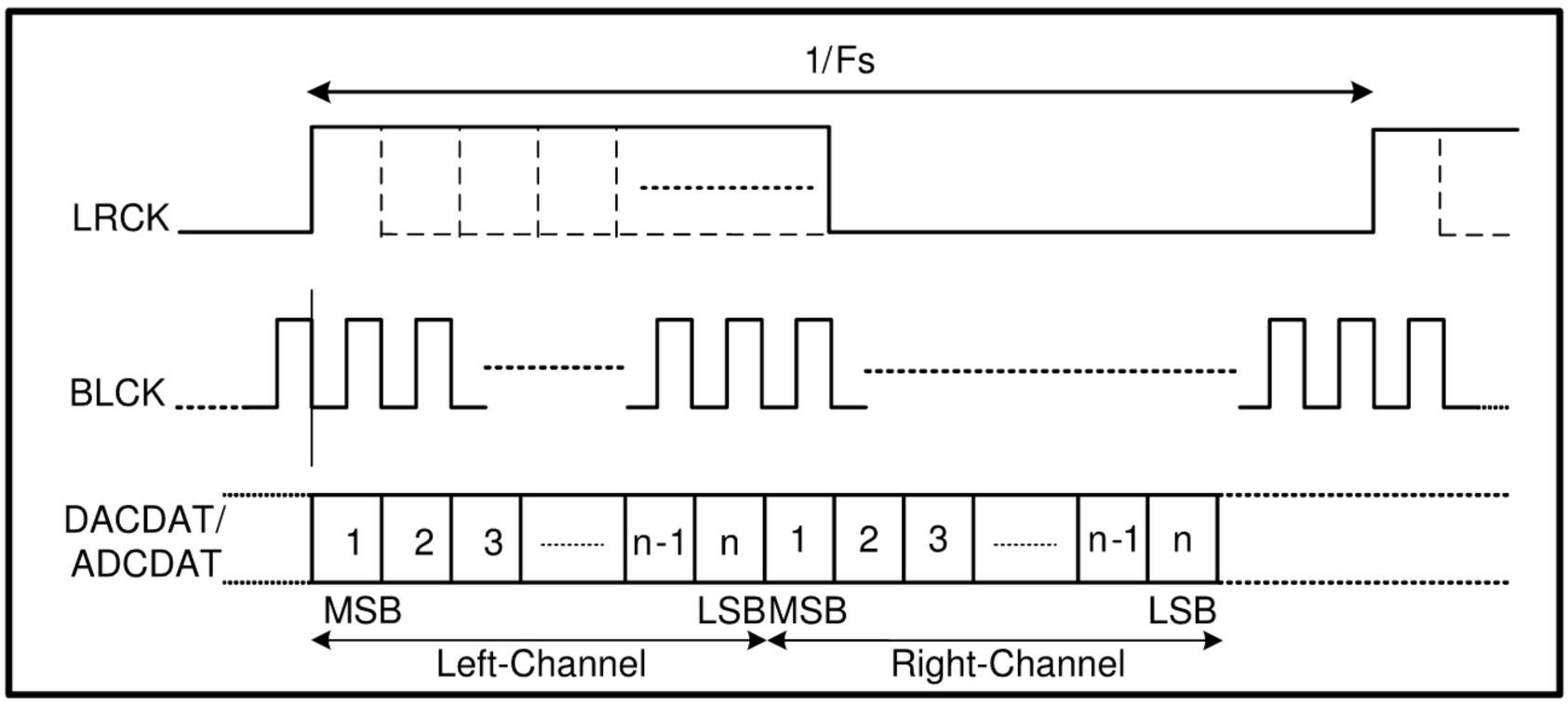

Figure 11. PCM Stereo Data Mode B Format (BCLK POLARITY=0)

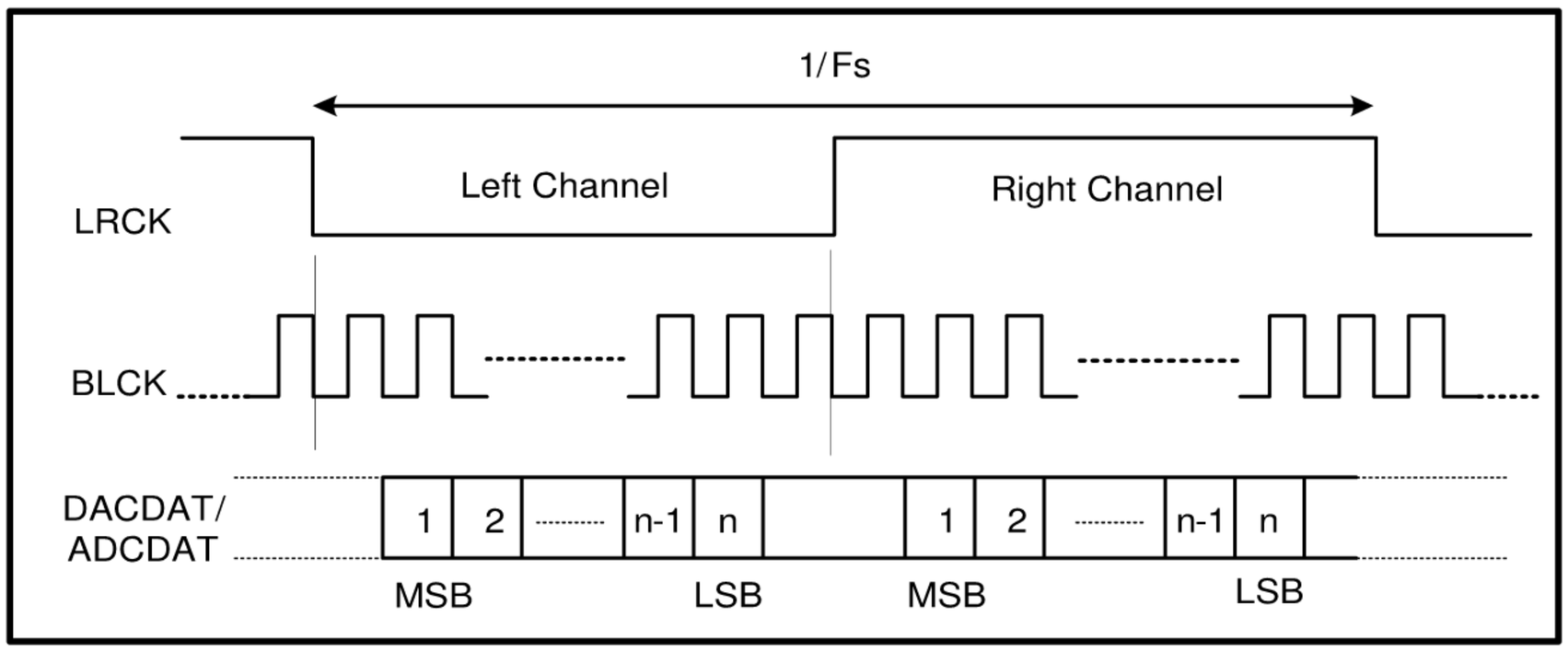

Figure 12. I²S Data Format (BCLK POLARITY=0)

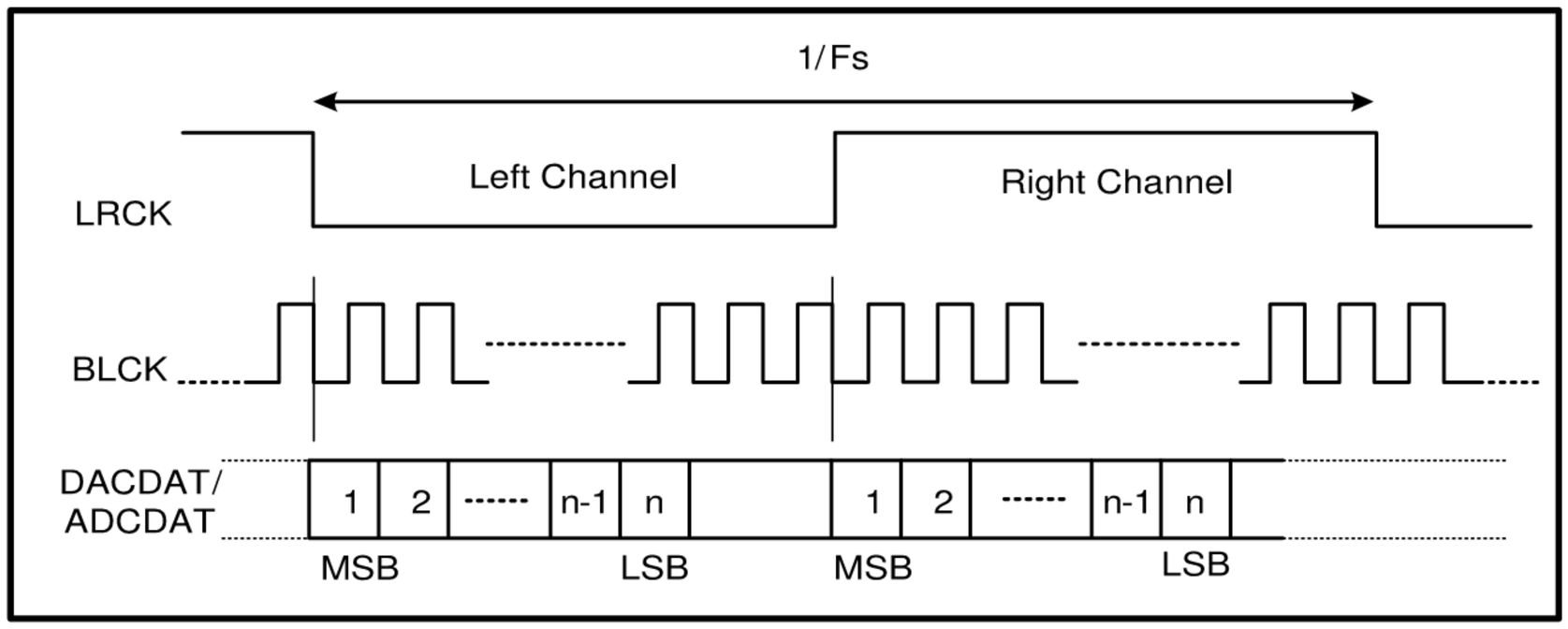

Figure 13. Left-Justified Data Format (BCLK POLARITY=0)

7.6. Audio Data Path

The ALC5639 provides 2-channel analog DACs for playback and 2-channel analog ADCs for recording.

7.6.1. 2 Analog ADCs with 4-Channel Record Path

There are two analog ADCs and with up to 4-channel recording path. You can use two analog microphones pass to analog ADCs and two digital microphones to reach 4-channel recording. Or use two digital microphone interfaces to reach 4-channel recording. These 4-channel data need to pass to 2-I2S interface, maybe two channels for one I2S interface or mono channel for one I2S interface.

The full scale input of analog ADC is around 0.55Vrms. In order to save power, the left and right analog ADC can be powered down separately by setting pow_adc_l (MX-61[2]) and pow_adc_r (MX-61[1]). And the volume control of the stereo ADC is also separately controlled by ad_gain_l (MX-1C[14:8]) and ad_gain_r (MX-1C[6:0]).

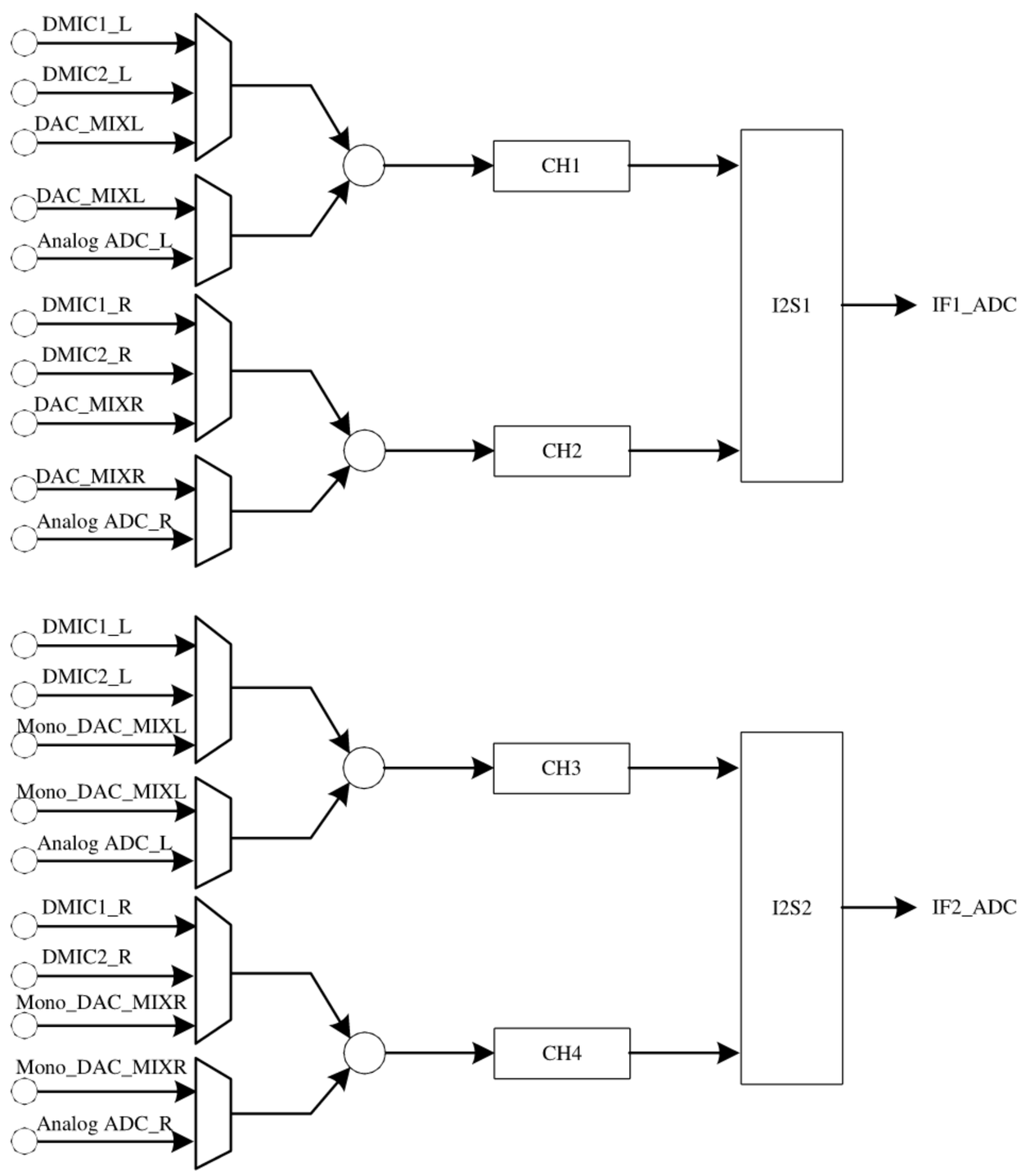

Figure 14. 4-Channel Recording Path

7.6.2. 2 DACs with 2-Channel Playback Path

There are two analog DACs and with 2-channel playback path. Two I2S interfaces provide two channels data to analog DACs. And analog DAC can output audio signal to speaker output, headphone output, or line output.

The full scale output of analog DAC is around 1Vrms at line output port. In order to save power, the two analog DACs can be powered down separately by setting pow_dac_l_1 (MX-61[12]) and pow_dac_r_1 (MX-61[11]). And the digital volume control of the two DACs are also separately controlled by vol_dac1_l (MX-19[15:8]) and vol_dac1_r (MX-19[7:0]).

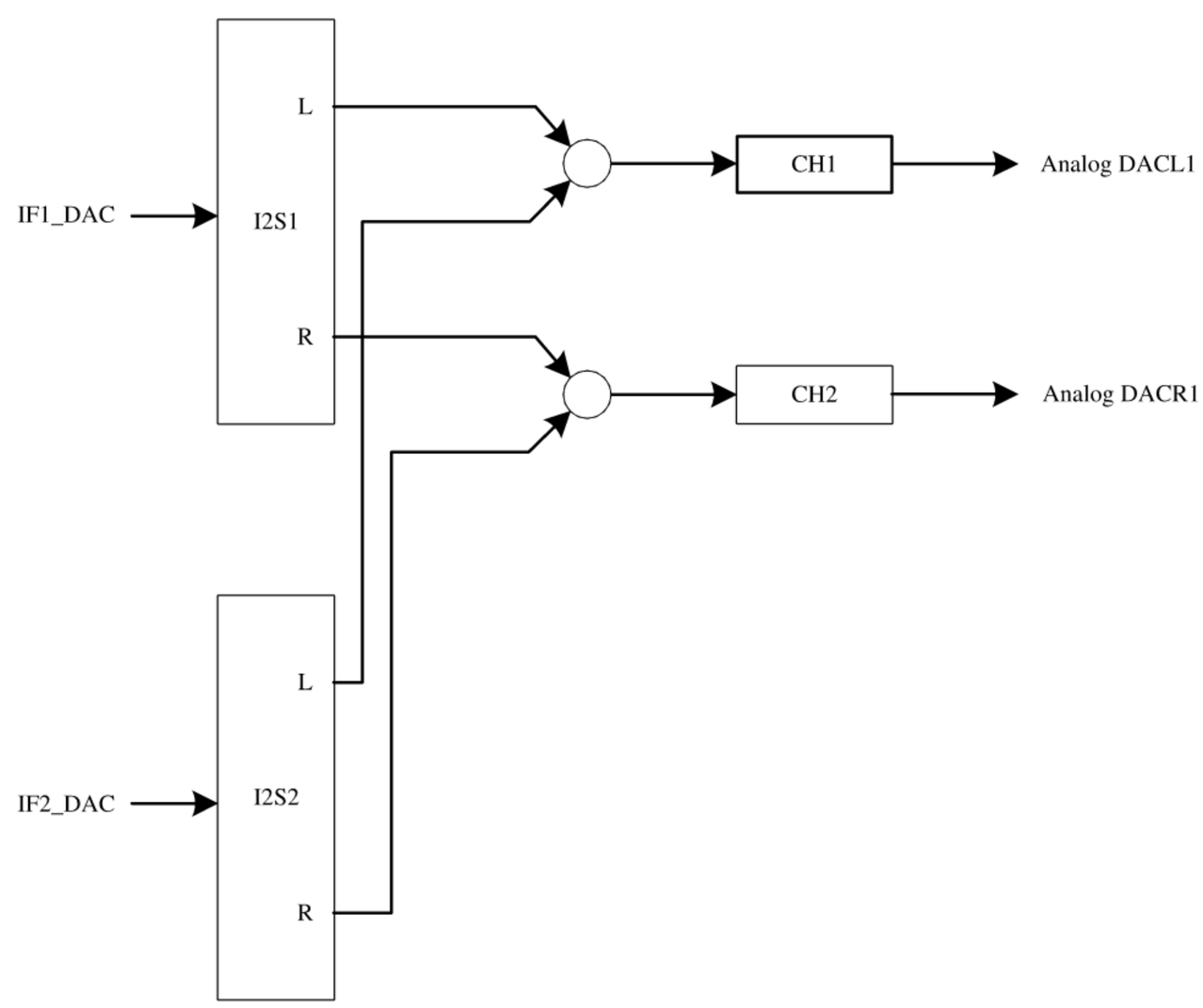

Figure 15. 2-Channel Playback Path

7.6.3. Mixers

The ALC5639 has digital and analog mixers build-in.

- **Output mixer - OUTMIXL/R**

  The stereo analog mixer can do mixing for DAC output and analog input. The mixer output is mainly for headphone output and line output. Each input path has it's mute control to the mixer block in MX-4D ~ MX-52. pow_outmixl and pow_outmixr can be used to power on/off OUTMIXL/R

- **Speaker mixer – SPKMIXL/R**

  The stereo analog mixer can do mixing for OUTMIX output, DAC output and analog input. The mixer output is for speaker output. Each input path has it's mute control to the mixer block in MX-46 and MX-47. pow_spkmixl and pow_spkmixr can be used to power on/off SPKMIXL/R.

- **Speaker_Out mixer – SPOMIXL/R**

  The stereo analog mixer can do mixing for from speaker volume, DAC and analog input. The mixer output is direct to speaker output. Each input path has it's mute control to the mixer block in MX-48 and MX-49.

- **LINE_Out mixer – LOUTMIX**

  The stereo analog mixer can do mixing for analog input and DAC output. The mixer output is for line-out output for drive external amplifier. Each input has individual mute control to the mixer block in MX-53. pow_lout can be used to power on/off LOUTMIX.

- **Record mixer – RECMIXL/R**

  The stereo analog mixer can do mixing for analog input and OUTMIX output. The mixer output is for ADC input. Each input path has it's mute control to the mixer block in MX-3B ~ MX-3E. pow_recmixl and pow_recmixr can be used to power on/off RECMIXL/R.

- **HP mixer – HPOMIXL/R**

  The stereo analog mixer can do mixing for headphone volume and DAC output. The mixer output directly output to external headphone device. Each input path has it's mute control to the mixer block in MX-45.

- **Digital mixer**

  There are ten digital mixers in ALC5639. Four digital mixers are assigned for ADC recording. These four mixers can mix analog line input, analog microphone input and digital microphone input then output to I2S interface to other device. Another four digital mixers are assigned DAC playback. These mixers can mix digital data from I2S interface or ADC data from external analog signal. The mixed data is output to analog DAC and output port to drive external device. The other two mixers are use for DA-AD processing. The incoming data from two I2S interfaces (DACDAT) uses these two mixers to do mixing and output to I2S interface (ADCDAT).

7.7. Analog Audio Input Port

The ALC5639 has two types analog input ports: microphone input and line input.

- **IN1P/N**

  The IN1P/N is a microphone type input port. The input port can be configured to differential input or single-ended input by MX-0D[7]. The microphone input port has its microphone bias and microphone boost. The low noise microphone bias can improve recording performance and enhance recording quality. Build-in short current detection scheme can be used for switch detection. Multi-steps microphone boost gain set by sel_bst1 (MX-0D[15:12]) is easy to use for microphone application. Pow_bst1 can be used to power down the MIC1 boost and pow_micbias1 can be used to power down the microphone bias 1.

- **IN2P/N**

  The IN2P/N is a dual type input port: microphone input and line input. Microphone input can be configured to differential input or single-ended input by MX-0E[6]. Multi-steps microphone boost gain set by sel_bst2 (MX-0E[11:8]) is easy to use for microphone application. Pow_bst2 can be used to power down the MIC2 boost. As line input, it has volume control for tuning by MX-0F[12:8] and MX-0F[4:0].

- **IN3P/N**

  The IN3P/N is a microphone type input port. Microphone input can be configured to differential input or single-ended input by MX-0D[6]. Multi-steps microphone boost gain set by sel_bst3 (MX-0D[11:8]) is easy to use for microphone application. Pow_bst3 can be used to power down the MIC3 boost.

7.8. Analog Audio Output Port

The ALC5639 supports four type output ports:

- **SPO_L/R_P/N**

  The speaker output of ALC5639 can be configured to stereo BTL output with Class-D type amplifier (Shown as Figure 14.). For external connection of stereo mode, chip's LP/LN/RP/RN to speaker's LP/LN/RP/RN.
  The power of speaker amplifier is an individual power pin and higher than AVDD. So the input and output of speaker amplifier has a gain ratio to enlarge or reduce the income analog signal. The gain ratio setting can be controlled by fbgain_clsd (MX-8D[15:12]).
  The input source of the speaker output port can be selected from analog input, SPKVOL, DAC output by setting MX-48/49.
  The front stage of speaker output has gain control and volume control. For gain control, the range is from 0dB to -9dB and controlled by MX-46/47. For volume control, the range is from +12dB to -46.5dB with 1.5dB/step controlled by MX-01.
  The pow_spo_voll (MX-66[15]) and pow_spo_volr (MX-66[14]) can be used to power on/off SPKVOLL and SPKVOLR. The pow_clsd (MX-61[0]) can be used to power on/off SPO_L/R_P/N.

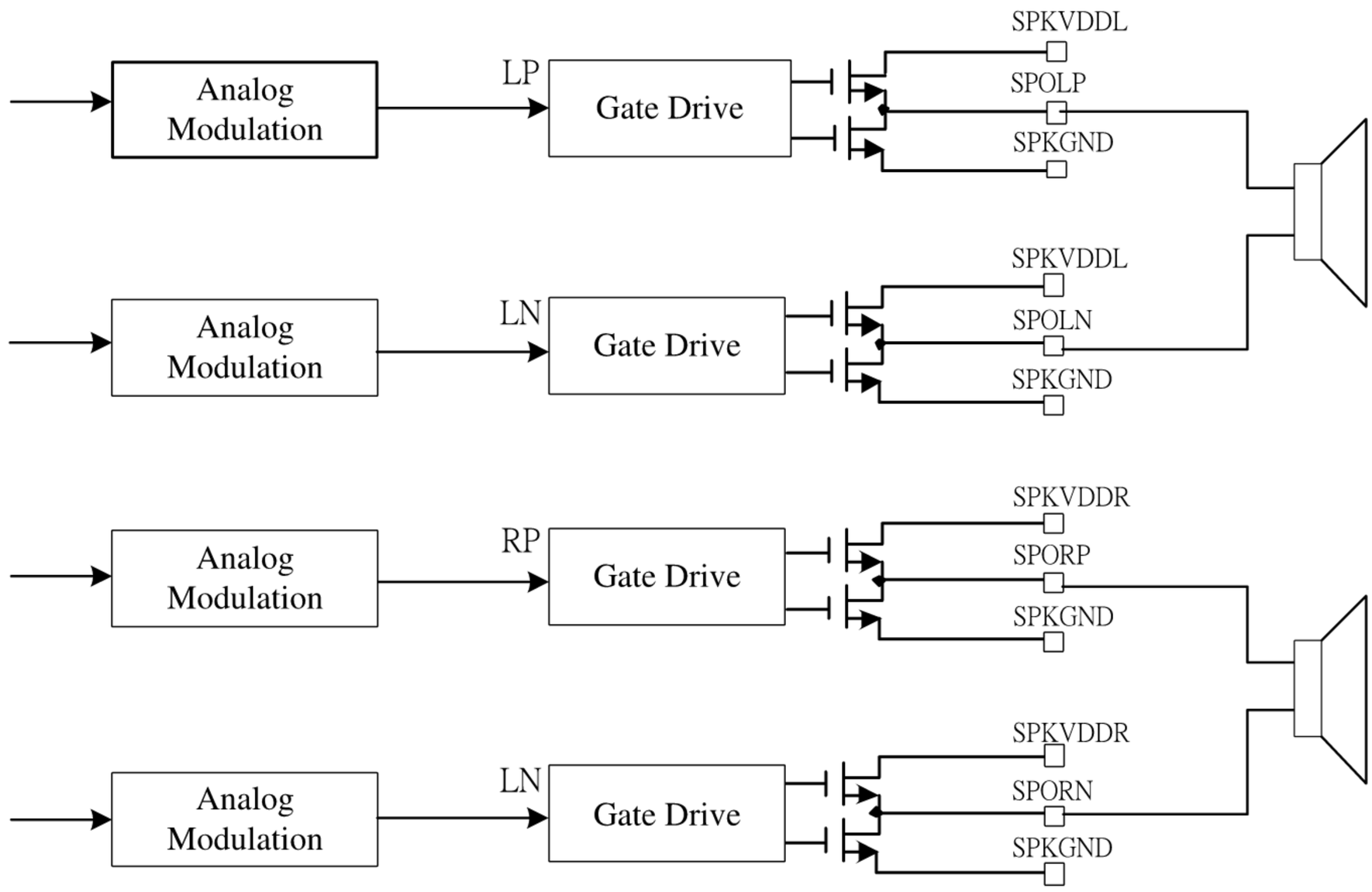

Figure 16. Speaker Output Mode – Stereo BTL Mode

- **HPO_L/R**

  The headphone output of ALC5639 is a stereo output with cap-free type headphone amplifier. It does not need to connect external capacitor and can connect to earphone device directly. The headphone output source can mix from output mixer (OUTMIX) or DAC by setting MX-45. The front stage of headphone output has volume control and gain control. The volume range is from +12dB to -46.5dB with 1.5dB/step by MX-02.
  En_l_hp and en_r_hp (MX-63[7/6]) can be used to power on/off Headphone Amplifier, and pow_hpo_voll and pow_hpo_volr (MX-66[11/10]) can be used to power on/off headphone volume control. In addition, pow_pump_hp (MX-8E[3]) can be used to power on/off charge pump circuit for Headphone Amplifier.

- **Line_OUT_L/R**

  The output type is line type output. The output is a stereo single ended output. The input can be selected from OUTVOL or DAC output by setting MX-53[15:12]. The front stage of LOUT output has gain control for attenuation. The gain control is 0dB or -6dB by MX-53[11].

7.9. DRC and AGC Function

The Dynamic Range Controller (DRC) dynamically adjusts the input signal and let the output signal achieve the target level. The ALC5639 supports playback DRC for DAC path, and the DRC can also be used as AGC(Auto Gain Controller) for ADC path. The control register is at MX-B4[15:14]. The function block is shown as below. The signal input pass through the Pre-Gain first, then DRC volume and Post-Gain then output. The Pre-Gain is use to enlarge the input signal. The DRC volume is use to attenuate the signal after detected by DRC. The Post-Gain is use to fine tune the signal after pass DRC tuning.

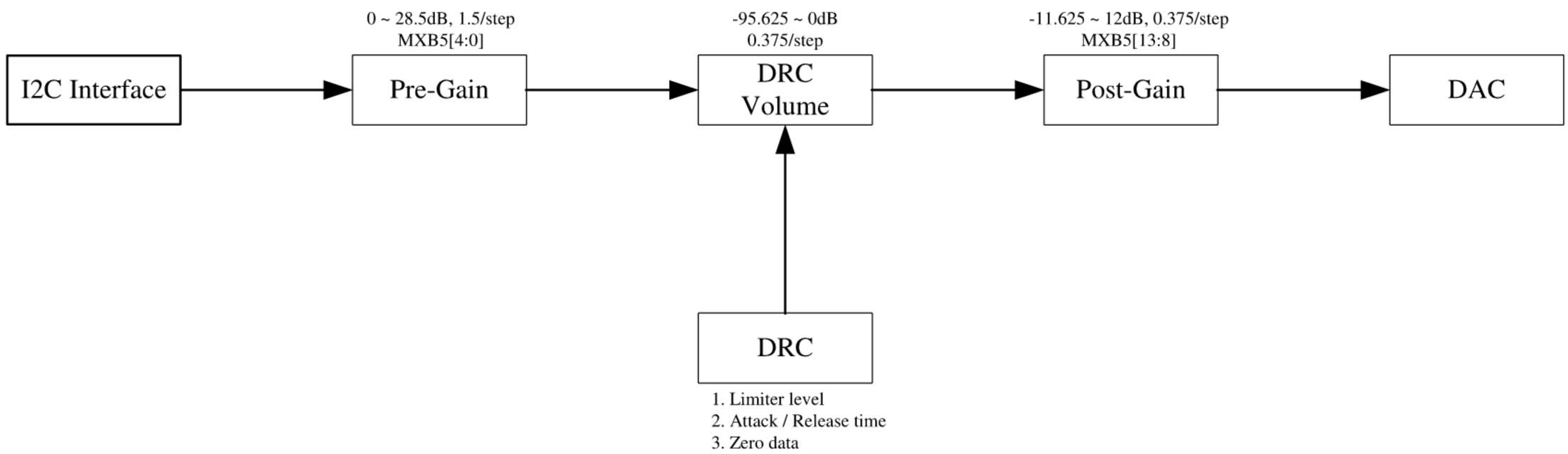

Figure 17. DAC DRC Function Block

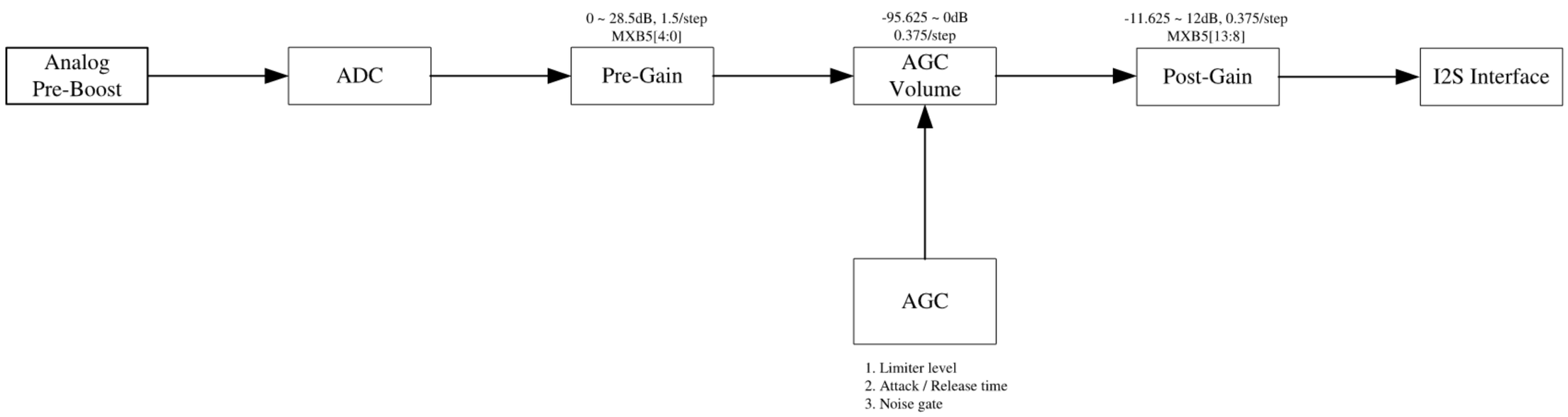

Figure 18. ADC AGC Function Block

Playback/Recording Mode:

For DAC playback or ADC recording mode, when the input signal exceeds target threshold, the signal will decrease "DRC/AGC Digital Volume" (0.375dB/step at every zero-crossing) until drop to target level then keep the digital volume. When input signal is below the target threshold, the signal will step-up "DRC/AGC Digital Volume" (0.375dB/step every zero-crossing) until return to original level. If want to return to the target level, need to set the pre-gain to achieve.

Fine tune parameters:

- Limiter Threshold: 0 ~ -46.5dB, 1.5dB/step, MX-B6[11:7]
- Attack Rate: T=(4*2^n)/sample rate, n = MX-B4[12:8]
- Recovery Rate: T=(4*2^n)/sample rate, n = MX-B4[4:0]

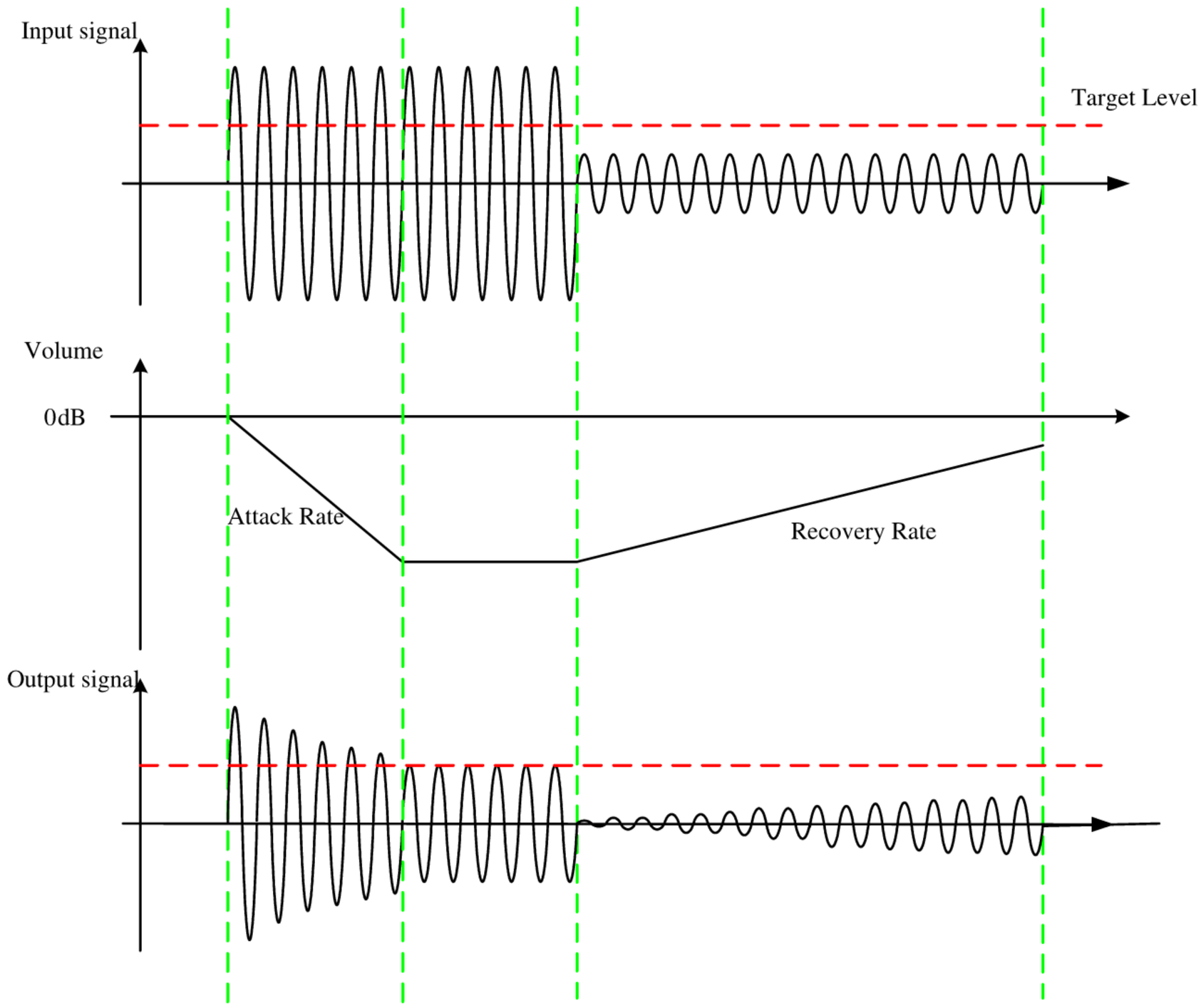

Figure 19. DRC/AGC for Playback/Recording Mode

Noise Gate Mode:

The Noise Gate Function is use to reduce the noise floor for DAC path or ADC path. When input signal is below noise gate level, the input signal will be reduced by DRC/AGC volume in order to suppress the background noise. The reducing level can be set by register. And when input signal is above noise gate, the input signal will be boosted to target level.

Fine tune parameters:

- Noise Gate Threshold: -36 ~ -82.5dB, 1.5dB/step, MX-B6[4:0]
- Noise Gate Attack Rate: T=(4*2^n)/sample rate, n = PR-06[4:0]
- Noise Gate Recovery Rate: T=(4*2^n)/sample rate, n = PR-02[12:8]
- Reducing Noise Level: 0 ~ 45dB, 3dB/step, MX-B6[15:12]

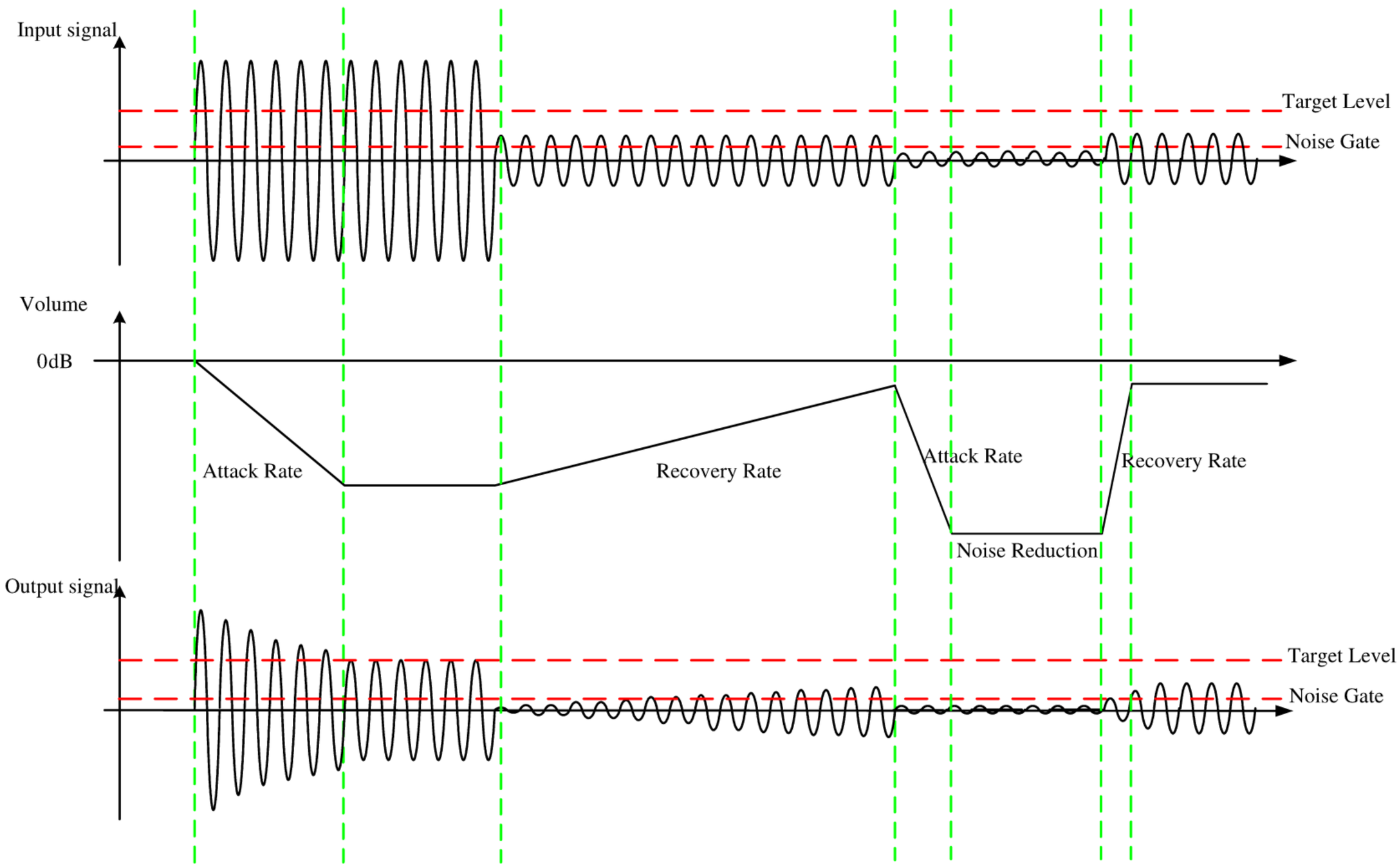

Figure 20. DRC/AGC for Noise Gate Mode

7.10. Speaker Amplifier Ratio Gain

Owing to speaker power (SPKVDD) and analog power (AVDD) are under different power domain. And normally the speaker power is higher than analog power. So the audio input signal needs to be boosted or reduce by a gain then output from speaker amplifier. When SPKVDD is dropping, the gain need to be reduced to prevent the signal is clipping. And when SPKVDD is rising, the gain need to be boosted to prevent the signal is too small.

Table 11. Ration Gain Table for SPKVDD and AVDD

	AVDD = 1.8V	AC + DC Ratio Gain	Register Setting MX-8D[15:12]
SPKVDD	3.0 V	1.94	0000'b, 1.94x
	3.3 V	2.0	0001'b, 2.00x
	3.5 V	2.11	0010'b, 2.11x
	3.6 V	2.22	0011'b, 2.20x
	3.8 V	2.33	0100'b, 2.33x
	4.0 V	2.44	0101'b, 2.44x
	4.2 V	2.55	0110'b, 2.55x
	4.4 V	2.66	0111'b, 2.66x
	4.6 V	2.77	1000'b, 2.77x
	4.8 V	3.0	1001'b, 3.00x
	5.0 V	3.3	1010'b, 3.30x

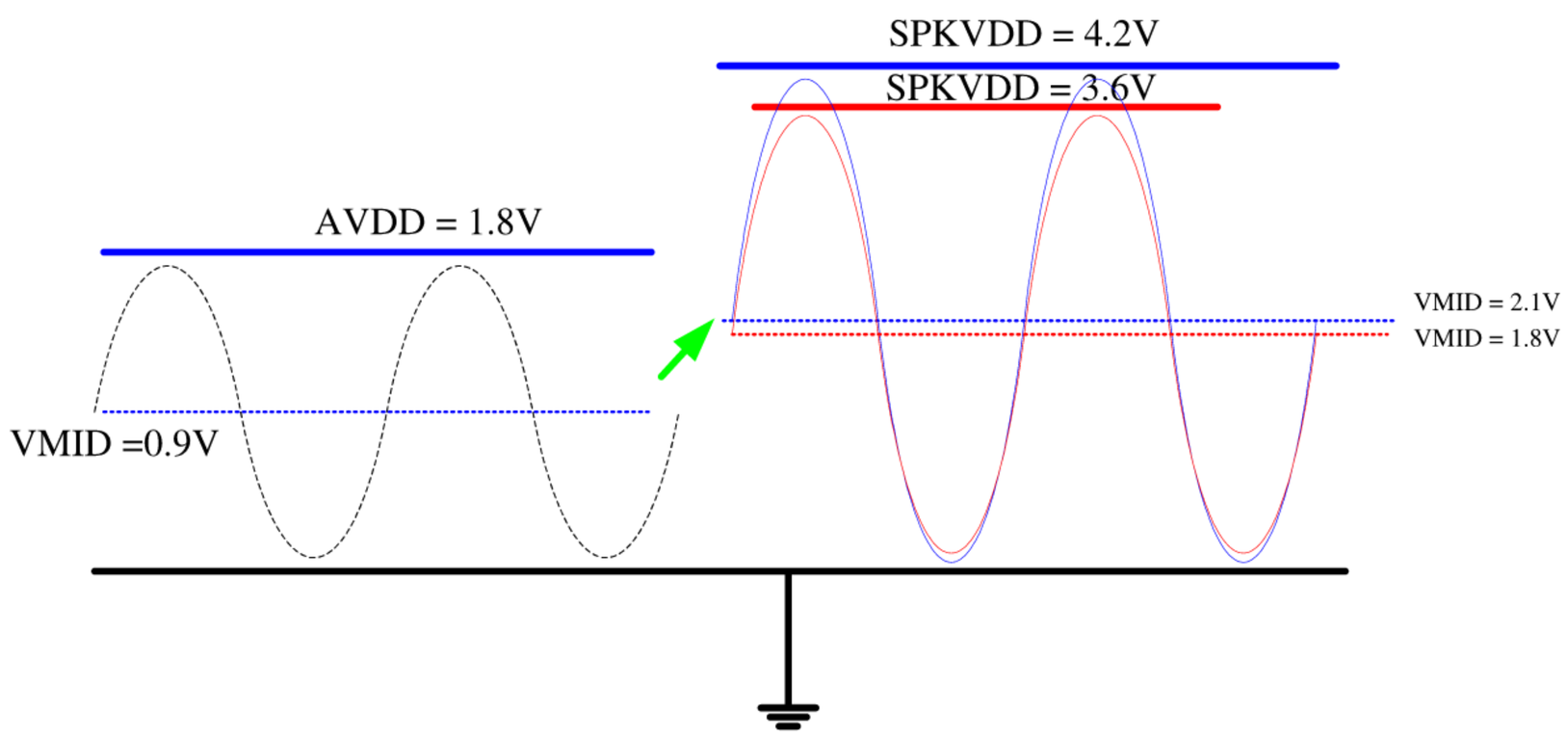

Figure 21. Ratio Gain Behavior for SPKVDD and AVDD

7.11. Equalizer Block

The equalizer block cascades 7 bands of equalizer to tailor the frequency characteristics of embedded speaker system according to user preferences and to emulate environment sound. The 7 bands equalizer includes two high pass filter, four band pass filter and one low pass filter. One high pass filter cascaded in the front end is used to drop low frequency tone, The tone has a large amplitude and may damage a mini speaker. The high pass filter can be used to adjust Treble strength with gain control. One low pass filter with gain control can adjust the Bass strength. Four bands of bi-quad band pass filters are used to emulate environment sounds, e.g., 'Pub', 'Live', 'Rock',… etc.. The gain, center frequency and bandwidth of each filter are all programmable.

7.12. Wind Filter

The wind filter is implemented by a high pass filter. The wind filter is mainly for ADC recording used. The cut-off frequency of wind filter is programmable and is varied according to different sample rate. The filter is used to remove DC offset at normal condition, and to remove wind noise at application mode.

Wind filter setting procedure:

Step1: Disable wind filter – MX-D3[15]

Step2: Select target sample rate – MX-D3[14:12] and MX-D3[10:8]

Step3: Fine tune wind filter Fc – PR-6E[11:6]

Step4: Enable wind filter – MX-D3[15]

The following table (Table 13.) is shown the Fc with sample rate selection.
For the formula of Fc calculation is also shown as:

$Fc = (Fs * \tan^{-1}(a/(2-a))) / \pi$

Where:
Sample rate = 8K/12K/16K (MX-D3[14:12] and [10:8]), $a = 2^{-6} + n * 2^{-6}$ (n is PR-6E[11:6])
Sample rate = 24K/32K (MX-D3[14:12] and [10:8]), $a = 2^{-7} + n * 2^{-7}$ (n is PR-6E[11:6])
Sample rate = 44.1K/48L (MX-D3[14:12] and [10:8]), $a = 2^{-8} + n * 2^{-8}$ (n is PR-6E[11:6])
Sample rate = 88.2K/96L (MX-D3[14:12] and [10:8]), $a = 2^{-9} + n * 2^{-9}$ (n is PR-6E[11:6])
Sample rate = 176.4K/192L (MX-D3[14:12] and [10:8]), $a = 2^{-10} + n * 2^{-10}$ (n is PR-6E[11:6])

Table 12. Sample Rate with filter coefficient for Wind Filter

PR-6E[11:6]	L & R Channel Sample Rate Setting				
n	8K	16K	32K	44.1K	48K
000000'b, 0	20.0	40.1	39.9	27.4	29.8
000001'b, 1	40.4	80.8	80.2	55.0	59.9
000010'b, 2	61.1	122.2	120.7	82.7	90.0
000011'b, 3	82.1	164.2	161.6	110.5	120.3
000100'b, 4	103.4	206.9	202.8	138.4	150.6
000101'b, 5	125.1	250.2	244.4	166.4	181.1
000110'b, 6	147.1	294.3	286.2	194.5	211.7
000111'b, 7	169.5	339.0	328.4	222.7	242.5
001000'b, 8	192.2	384.4	371.0	251.1	273.3
001001'b, 9	215.2	430.5	413.8	279.5	304.3
001010'b, 10	238.7	477.4	457.0	308.1	335.4
001011'b, 11	262.4	524.9	500.5	336.8	366.6
001100'b, 12	286.6	573.2	544.4	365.6	397.9
001101'b, 13	311.1	622.3	588.6	394.5	429.4
001110'b, 14	336.0	672.1	633.2	423.5	460.9
001111'b, 15	361.3	722.6	678.1	452.6	492.6
010000'b, 16	386.9	773.9	723.3	481.9	524.5
010001'b, 17	413.0	826.0	768.9	511.2	556.4
010010'b, 18	439.4	878.9	814.9	540.7	588.5
010011'b, 19	466.2	932.5	861.2	570.3	620.7
010100'b, 20	493.5	987.0	907.8	600.0	653.0
010101'b, 21	521.1	1042.2	954.9	629.8	685.5
010110'b, 22	549.1	1098.2	1002.2	659.7	718.1
010111'b, 23	577.5	1155.0	1050.0	689.8	750.8
011000'b, 24	606.3	1212.7	1098.1	719.9	783.6
011001'b, 25	635.5	1271.1	1146.6	750.2	816.6
011010'b, 26	665.1	1330.3	1195.5	780.6	849.6
011011'b, 27	695.2	1390.4	1244.7	811.1	882.9
011100'b, 28	725.6	1451.2	1294.3	841.8	916.2
011101'b, 29	756.4	1512.9	1344.3	872.5	949.7
011110'b, 30	787.6	1575.3	1394.7	903.4	983.3
011111'b, 31	819.3	1638.6	1445.4	934.4	1017.0
100000'b, 32	851.3	1702.7	1496.5	965.5	1050.9
100001'b, 33	883.7	1767.5	1548.0	996.8	1084.9
100010'b, 34	916.6	1822.3	1599.9	1028.1	1119.0
100011'b, 35	949.8	1899.6	1652.2	1059.6	1153.3
100100'b, 36	983.3	1966.7	1704.9	1091.2	1187.7
100101'b, 37	1017.3	2034.7	1757.9	1122.9	1222.2
100110'b, 38	1051.6	2103.3	1811.4	1154.8	1256.9
100111'b, 39	1086.3	2172.7	1865.2	1186.7	1291.7
101000'b, 40	1121.4	2242.9	1919.5	1218.8	1326.6
101001'b, 41	1156.8	2313.7	1974.1	1251.0	1361.7
101010'b, 42	1192.6	2385.2	2029.1	1283.4	1396.9
101011'b, 43	1228.7	2457.4	2084.6	1315.8	1432.2
101100'b, 44	1265.1	2530.2	2140.4	1348.4	1467.7
101101'b, 45	1301.8	2603.6	2196.6	1381.1	1503.3
101110'b, 46	1338.8	2677.7	2253.3	1414.0	1539.0
101111'b, 47	1376.1	2752.3	2310.3	1447.0	1574.9
110000'b, 48	1413.7	2827.5	2367.7	1480.0	1610.9
110001'b, 49	1451.5	2903.1	2425.5	1513.3	1647.1

PR-6E[11:6] n	L & R Channel Sample Rate Setting				
	8K	16K	32K	44.1K	48K
110010'b, 50	1489.6	2979.3	2483.8	1546.6	1683.4
110011'b, 51	1528.0	3056.0	2542.4	1580.1	1719.8
110100'b, 52	1566.5	3133.1	2601.5	1613.7	1756.4
110101'b, 53	1605.3	3210.6	2660.9	1647.4	1793.1
110110'b, 54	1644.2	3288.4	2720.8	1681.3	1830.0
110111'b, 55	1683.3	3366.6	2781.0	1715.3	1867.0
111000'b, 56	1722.5	3445.1	2841.7	1749.4	1904.1
111001'b, 57	1761.9	3523.9	2902.7	1783.6	1941.4
111010'b, 58	1801.4	3602.9	2964.2	1818.0	1978.8
111011'b, 59	1841.0	3682.1	3026.1	1852.5	2016.3
111100'b, 60	1880.7	3761.4	3088.3	1887.1	2054.0
111101'b, 61	1920.4	3840.8	3151.0	1921.9	2091.9
111110'b, 62	1960.2	3920.4	3214.1	1956.8	2129.9
111111'b, 63	2000.0	4000.0	3277.5	1991.8	2168.0

7.13. I²C Control Interface

I²C is a 2-wire (SCL/SDA) half-duplex serial communication interface, supporting only slave mode. SCL is used for clock and SDA is for data. SCL clock supports up to 400KHz rate and SDA data is a open drain structure. The input has built-in spike filter and can remove less than 50ns spike at SCL and SDA.

7.13.1. Address Setting

Table 13. Address Setting (0x38h)

(MSB)			BIT				(LSB)
0	0	1	1	1	0	0	R/W

7.13.2. Complete Data Transfer

Data Transfer over I²C Control Interface

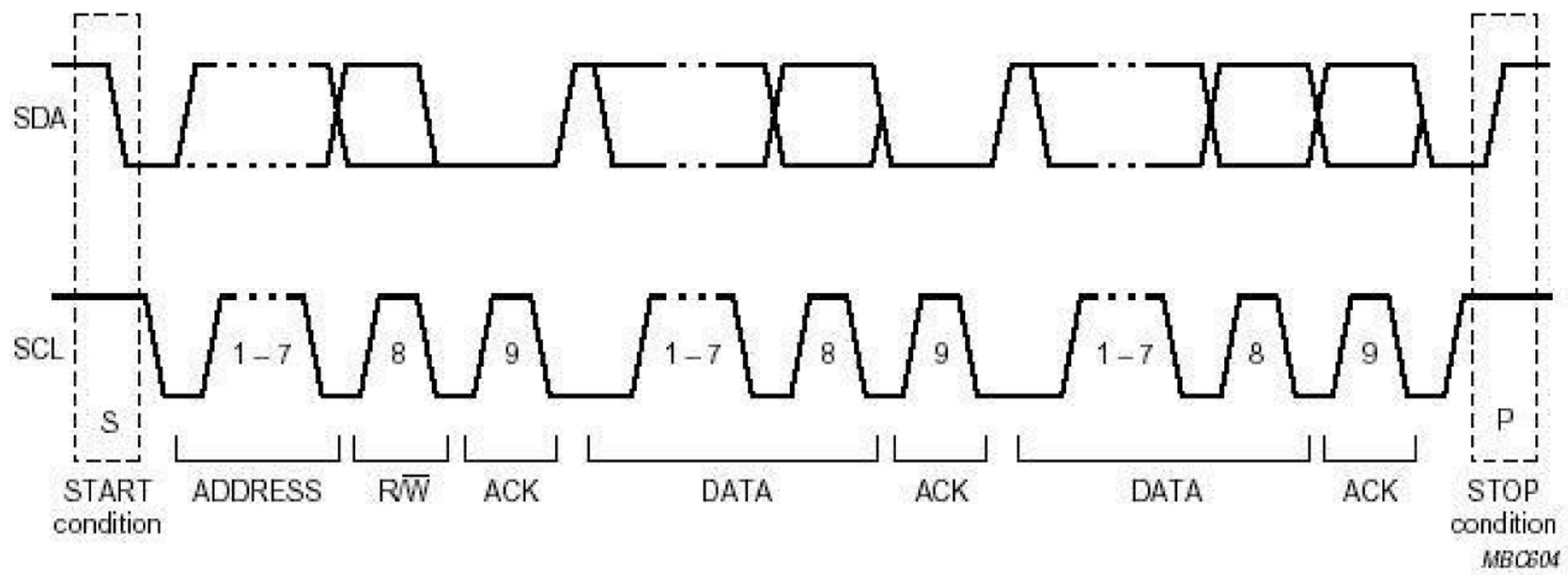

Figure 22. Data Transfer Over I²C Control Interface

Write WORD Protocol

Table 14. Write WORD Protocol

1	7	1	1	8	1	8	1	8	1	1
S	Device Address	Wr	A	Register Address	A	Data Byte High	A	Data Byte Low	A	P

Read WORD Protocol

Table 15. Read WORD Protocol

1	7	1	1	8	1	7	1	8	1	8	1	1
S	Device Address	Wr	A	Register Address	A	S	Device Address	Rd	A	Data Byte High	A	Data Byte Low	NA	P

S: Start Condition
Slave Address: 7-bit Device Address
Wr: 0 for Write Command
Rd: 1 for Read Command
Command Code: 8-bit Register Address

A: 0 for ACK, 1 for NACK
Data Byte: 16-bit Mixer data
□: Master-to-Slave
■: Slave-to-Master

7.14. GPIO, Interrupt and Jack Detection

The ALC5639 supports two GPIOs – GPIO1/GPIO2. These two GPIOs are multi-function pins. GPIO1 can be configured to GPIO or IRQ output by MX-C0[15]. GPIO2 can be configured to GPIO or DMIC clock output by MX-C0[14]. These two GPIOs can also be configured to jack detection pins. For jack detection purpose, it needs switch GPIO to input pin. Basically, ALC5639 has dedicated jack detection pins – JD1 and JD2. The JD1 and JD2 share pins with IN1N and IN2N.

For GPIO function, the GPIO can be configured to input or output. For input type, the internal circuit can read pin status and report to register table. For output type, the internal circuit can drive this pin to high or low to control external device. In GPIO function, the pin polarity can be controlled by register at output type.

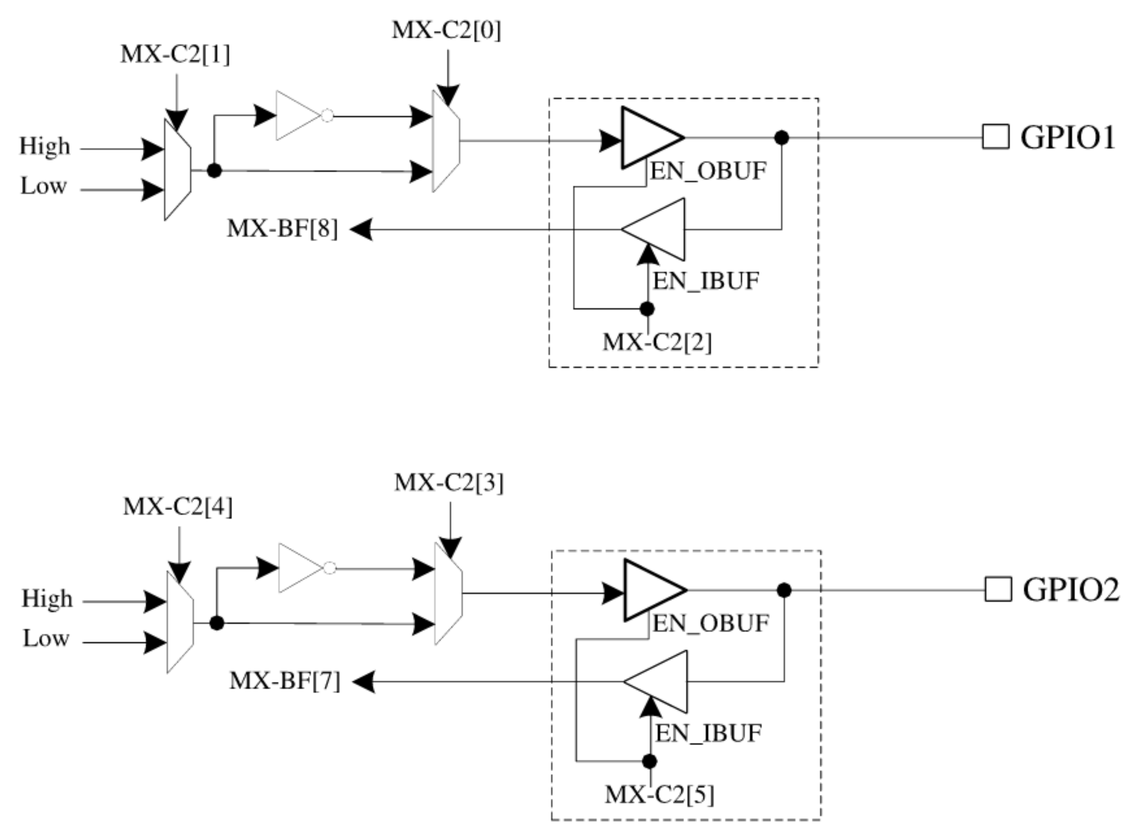

Figure 23. GPIO Function Block

For IRQ function, the IRQ output source can be selected from JD Status, JD2 Status, Over-Temperature Status and MICBIAS1 Over-Current Status. When either status is trigged, the GPIO will output a flag as interrupt signal.

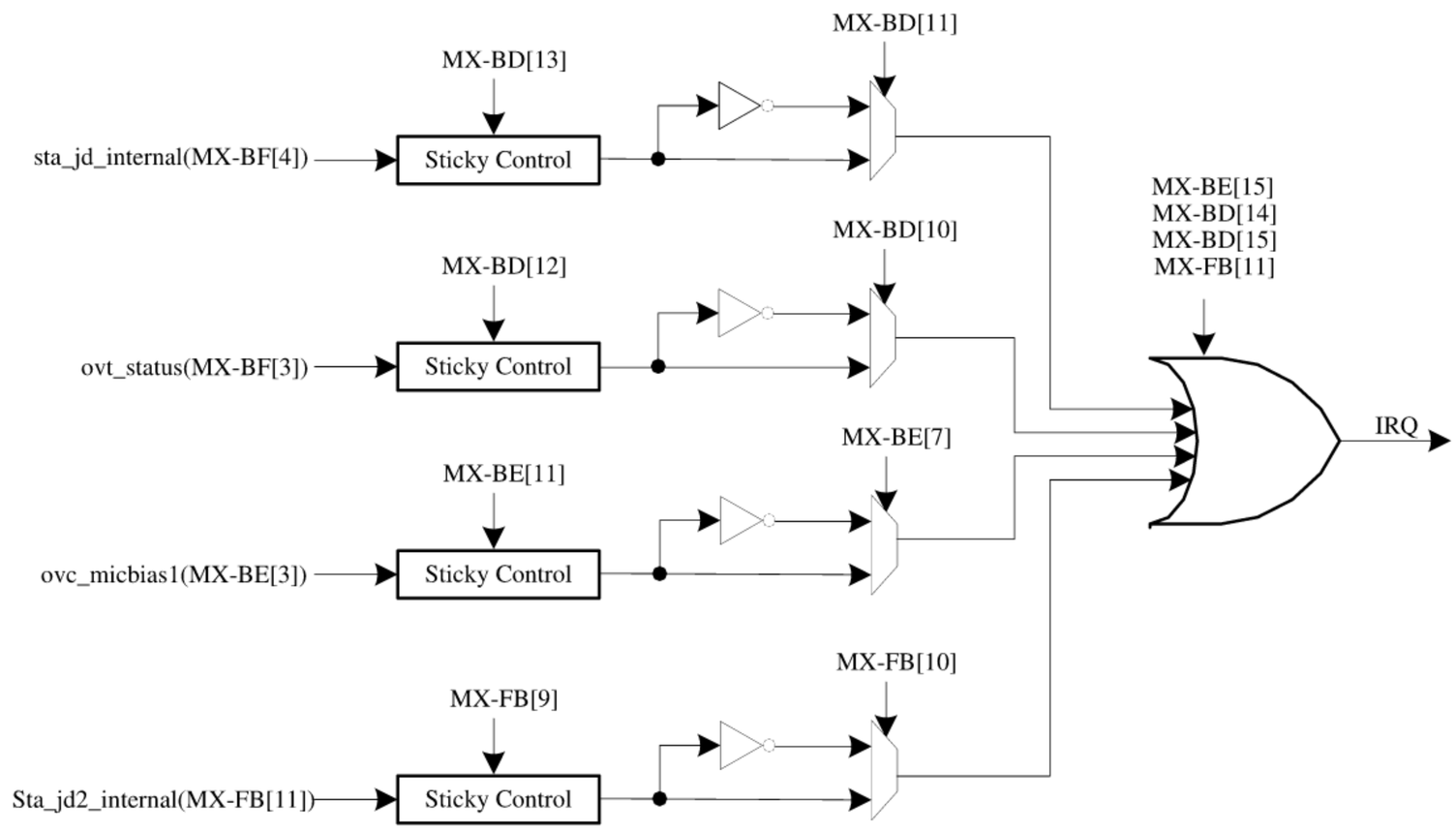

Figure 24. IRQ Function Block

In general, the IRQ output needs to combine with JD function. When JD is trigger, IRQ will output a flag to host to notice S/W driver. The S/W driver will do something by system design. The behavior flow chard as following:

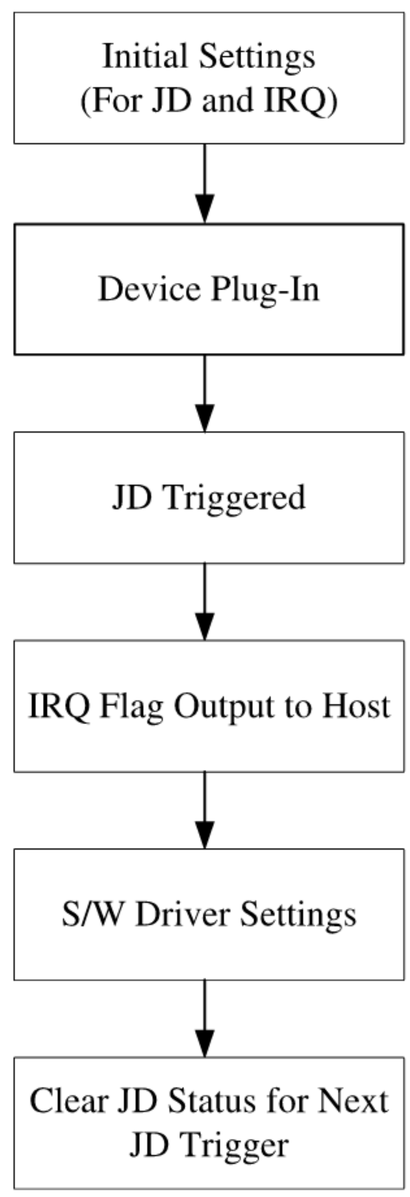

The MICBIAS supports short detection function. When MICBIAS circuit is short, MICBIAS circuit will generate an over-current flag. The flag can generate an interrupt signal to notice host and let S/W do follow-up processings.

For jack detection function as shown Figure 25. There are two internal JD status can be set. For sta_jd_internal – MX-BF[4], there are four pins can as jack detection source - GPIO1, GPIO2, JD1 (share with IN1N) and JD2 (share with IN2N). The source selection control is at MX-BB[15:13]. For another JD status – sta_jd2_internal – MX-FB[11] is dedicated for JD2 pin. And the enable control is by MX-FB[8]. Owing to JD2 can as sta_jd_internal status and also can as sta_jd2_internal status, JD2 can't be used together for these two status.

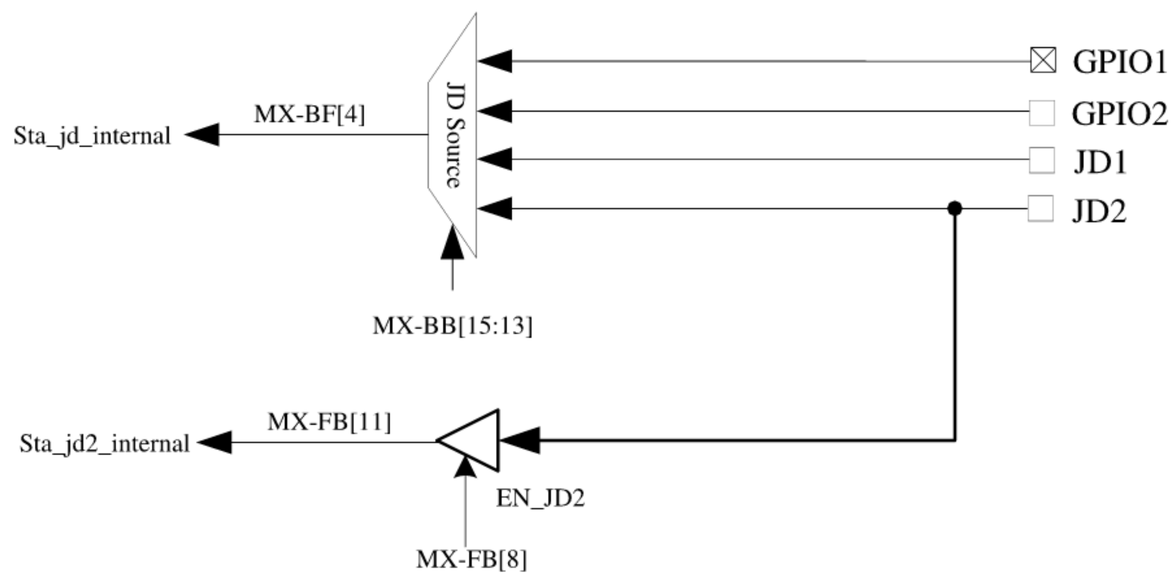

Figure 25. JD Source Selection

The jack detect function can be used to turn-on or turn-off the related output ports. When jack detect pin is trigged, the selected output ports will be turn-on or turn-off. For example on HP and SPK auto switch when JD is trigger.

Setting procedure:

1. Select JD source: use JD1 as JD source. MX-BB[15:13] = 010'b
2. Set wanted behavior by JD action – HP & SPK auto switch when JD is trigger.
   MX-BB[11:6] = 111010'b
3. When JD status is low, HP_OUT is mute and SPK is un-mute.
   When JD status is low go high, HP is un-mute and SPK is mute.

Note: For HP and SPK jack switch function, driver need to turn-on DAC to HP path and DAC to SPK path first. The register control of MX-BB[11:6] is only do mute/un-mute function for HP and SPK.

7.15. Power Management

ALC5639 detailed Power Management control registers are supported in MX-61h, 62h, 63h, 64h and 65h. Each particular block will only be active when each bit of MX-61h, 62h, 63h, 64h, and 65h is set to enable.

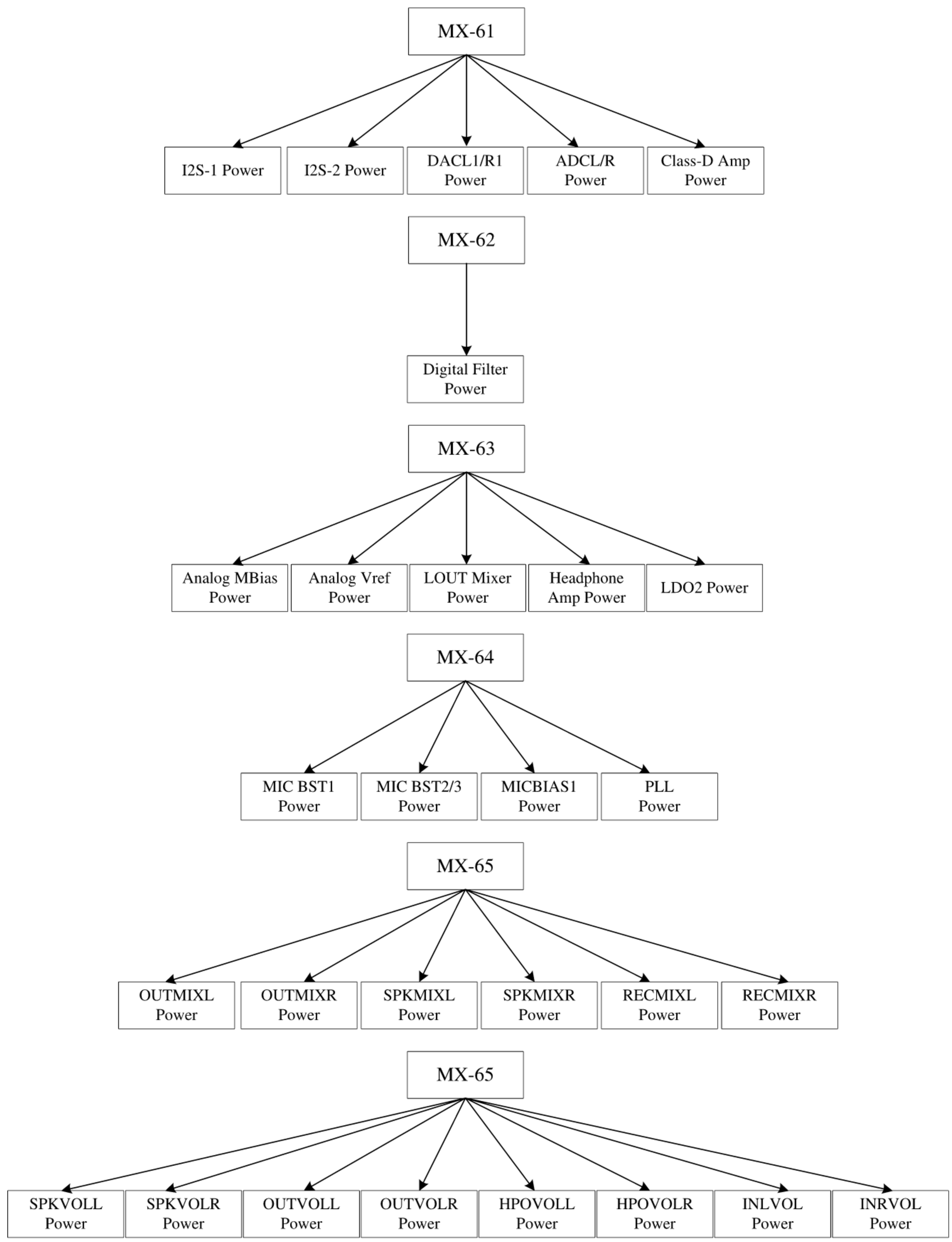

Figure 26. Power Management

7.16. Programmable Register Array

The Programmable Register Array is used for continuing executing register set by one register command. These registers are need to program first. There are 16-sequences register settings can be set. For each sequence, can fill in MX type registers, PR type register or time delay (100us ~ 100ms). These 16-sequences registers can be divided to two sequencers. The start point and end point for each sequencer can be set from sequence-0 to sequence-15. For example, you can program sequencer-1 to execute sequence-0 to sequence-10 and sequencer-2 to execute sequence-11 to sequence-15 or program sequencer-1 to execute sequence -6 to sequence -15 and sequencer-2 to execute sequence -0 to sequence -5.

The Table 17 shown as programmable register table with two sequencers.

Table 16. Programmable Register Table

Sequencer (1-bit)		Sequences (4-bit)	Delay Time (8-bit)	Register Level (1-bit)	Register Index (8-bit)	Register Data (16-bit)
1	Start	0000'b	-	x	xx	xxxx
	-	0001'b	xx	-	-	-
	-	0010'b	-	x	xx	xxxx
	-	0011'b	xx	-	-	-
	-	0100'b	-	x	xx	xxxx
	-	0101'b	xx	-	-	-
	End	0110'b	-	x	xx	xxxx
2	Start	0111'b	xx	-	-	-
	-	1000'b	-	x	xx	xxxx
	-	1001'b	xx	-	-	-
	-	1010'b	-	x	xx	xxxx
	-	1011'b	xx	-	-	-
	-	1100'b	-	x	xx	xxxx
	-	1101'b	xx	-	-	-
	-	1110'b	-	x	xx	xxxx
	End	1111'b	xx	-	-	-

Settings Procedures:

1. Set Programmable Register Table
   => Set register level (MX-C8[9])/register index (MX-C8[7:0])/register data (MX-C9) for each sequence (MX-C8[15:12])
   => Set delay time (MX-CA[15:8]) for each sequence (MX-C8[15:12])
   => Set start point (MX-CB[11:8]/MX-CC[11:8]) and end point (MX-CB[3:0]/MX-CC[3:0]) for each sequencer
2. Enable Programmable Register Function (MX-CA[7])
3. Execute Sequencer-1/2
   => Sequencer-1 (MX-CA[6])
   => Sequencer-2 (MX-CA[5])
4. Check Sequencer-1/2 finished or not?
   => Sequencer-1 (MX-C8[11])
   => Sequencer-2 (MX-C8[10])

8. Registers List

ALC5639 register map as shown as following and accessing unimplemented registers, will return a 0.

8.1. Register Map

Table 17. Register Map

Type	Name	Description	Register Address	Reset State
Reset	S/W Reset	S/W Reset & Device ID	MX-00h	0x0000'h
I/O	SPKOUT	Speaker Output Volume & Mute/Un-Mute	MX-01h	0xC8C8'h
	HPOUT	Headphone Output Volume & Mute/Un-Mute	MX-02h	0xC8C8'h
	LOUT	Line Output Volume & Mute/Un-Mute	MX-03h	0xC8C8'h
	IN1/3	IN1/3 Mode and Gain Boost Control	MX-0Dh	0x0000'h
	IN2	IN2 Mode and Gain Boost Control	MX-0Eh	0x0000'h
	INL/INR	INL/INR Volume Control	MX-0Fh	0x0808'h
Digital Gain/Volume	DACL/R	DACL/R Digital Volume Control	MX-19h	0xAFAF'h
	ADCL/R-1	ADCL/R Digital Volume & Mute/Un-Mute Control	MX-1Ch	0x2F2F'h
	ADCL/R-2	ADCL/R Digital Path Volume Control	MX-1Dh	0x2F2F'h
	ADCL/R-3	ADC Boost Gain for DMIC	MX-1Eh	0x0000'h
Digital Mixer	ADC-1	ADC Stereo Digital Mixer Control	MX-27h	0x7060'h
	ADC-2	ADC Mono Digital Mixer Control	MX-28h	0x7070'h
	ADC-3	ADC to DAC Digital Mixer Control	MX-29h	0x8080'h
	DAC-1	DAC Stereo Digital Mixer Control	MX-2Ah	0x5454'h
	DAC-2	DAC Mono Digital Mixer Control	MX-2Bh	0x5454'h
	DAC-3	DAC Stereo to Mono Mixer Control	MX-2Ch	0xAA00'h
	Copy Mode	ADC/DAC Data Copy Mode Control	MX-2Fh	0x0000'h
Input Mixer	RECMIXL-1	RECMIXL Gain Control	MX-3Bh	0x0000'h
	RECMIXL-2	RECMIXL Gain & Selection Control	MX-3Ch	0x007F'h
	RECMIXR-1	RECMIXR Gain Control	MX-3Dh	0x0000'h
	RECMIXR-2	RECMIXR Gain & Selection Control	MX-3Eh	0x007F'h
Output Mixer	HPOMIX	HPOMIX Gain & Selection Control	MX-45h	0xE000'h
	SPKMIXL	SPKMIXL Gain & Selection Control	MX-46h	0x003E'h
	SPKMIXR	SPKMIXR Gain & Selection Control	MX-47h	0x003E'h
	SPOMIXL	SPOMIXL Selection Comtrol	MX-48h	0xF800'h
	SPOMIXR	SPOMIXR Selection Control	MX-49h	0x3800'h
	SPOMIXL/R	SPOMIXL/R Gain Control	MX-4Ah	0x0004'h
	OUTMIXL-1	OUTMIXL Gain Control-1	MX-4Dh	0x0000'h
	OUTMIXL-2	OUTMIXL Gain Control-2	MX-4Eh	0x0000'h
	OUTMIXL-3	OUTMIXL Selection Control	MX-4Fh	0x01FF'h
	OUTMIXR-1	OUTMIXR Gain Control-1	MX-50h	0x0000'h
	OUTMIXR-2	OUTMIXR Gain Control-2	MX-51h	0x0000'h
	OUTMIXR-3	OUTMIXR Selection Control	MX-52h	0x01FF'h
	LOUTMIX	LOUTMIX Gain & Selection Control	MX-53h	0xF000'h
Power Management	Management-1	I2S & DAC & ADC & Class-D Power Control	MX-61h	0x0000'h
	Management-2	Digital Filter Power Control	MX-62h	0x0000'h
	Management-3	VREF & MBias & LOUTMIX & HP & LDO2 Power Control	MX-63h	0x00C0'h
	Management-4	MICBST & MICBIAS Power Control	MX-64h	0x0000'h

Type	Name	Description	Register Address	Reset State
	Management-5	OUTMIX & SPKMIX & RECMIX Power Control	MX-65h	0x0000'h
	Management-6	SPOVOL & OUTVOL & HPOVOL & INVOL Power Control	MX-66h	0x0000'h
PR Register	PR Index	PR Register Index	MX-6Ah	0x0000'h
	PR Data	PR Register Data	MX-6Ch	0x0000'h
Digital Interface	I2S1 Port Ctrl	I2S-1 Interface Control	MX-70h	0x8000'h
	I2S2 Port Ctrl	I2S-2 Interface Control	MX-71h	0x8000'h
	ADC/DAC Clock	ADC/DAC Clock Control	MX-73h	0x1110'h
Digital MIC	DMIC	Digital Microphone Control	MX-75h	0x1D00'h
Global Clock	Global Clock	Global Clock Control	MX-80h	0x0000'h
	PLL-1	PLL Control-1	MX-81h	0x0000'h
	PLL-2	PLL Control-2	MX-82h	0x0000'h
	ASRC-1	ASRC Control-1	MX-83h	0x0000'h
	ASRC-2	ASRC Control-2	MX-84h	0x0000'h
	ASRC-3	ASRC Control-3	MX-85h	0x0008'h
	ASRC-6	ASRC Control-4	MX-89h	0x0000'h
	ASRC-7	ASRC Control-5	MX-8Ah	0x0000'h
SPK Amp	Class-D	Class-D OC Control	MX-8Ch	0x0228'h
	Class-D	Class-D Ratio Gain & Mode Control	MX-8Dh	0xA800'h
HP Amp	HP	HP Amp Control 1	MX-8Eh	0x0004'h
		HP Amp Control 2	MX-91h	0x0C00'h
SPK Amp	PV Detection	SPKVDD Detection Control	MX-92h	0x0000'h
MICBIAS	MICBIAS	MICBIAS Control	MX-93h	0x3000'h
EQ	EQ-1	EQ Control-1	MX-B0h	0x2000'h
	EQ-2	EQ Control-2	MX-B1h	0x0000'h
	EQ-Parameter	EQ Low Pass Filter – a1	PR-A0h	0x1C10'h
	EQ-Parameter	EQ Low Pass Filter – H0	PR-A1h	0x01F4'h
	EQ-Parameter	EQ Band Pass Filter 1 – a1	PR-A2h	0xC5E9'h
	EQ-Parameter	EQ Band Pass Filter 1 – a2	PR-A3h	0x1A98'h
	EQ-Parameter	EQ Band Pass Filter 1 – H0	PR-A4h	0x1D2C'h
	EQ-Parameter	EQ Band Pass Filter 2 – a1	PR-A5h	0xC882'h
	EQ-Parameter	EQ Band Pass Filter 2 – a2	PR-A6h	0x1C10'h
	EQ-Parameter	EQ Band Pass Filter 2 – H0	PR-A7h	0x01F4'h
	EQ-Parameter	EQ Band Pass Filter 3 – a1	PR-A8h	0xE904'h
	EQ-Parameter	EQ Band Pass Filter 3 – a2	PR-A9h	0x1C10'h
	EQ-Parameter	EQ Band Pass Filter 3 – H0	PR-AAh	0x01F4'h
	EQ-Parameter	EQ Band Pass Filter 4 – a1	PR-ABh	0xE904'h
	EQ-Parameter	EQ Band Pass Filter 4 – a2	PR-ACh	0x1C10'h
	EQ-Parameter	EQ Band Pass Filter 4 – H0	PR-ADh	0x01F4'h
	EQ-Parameter	EQ High Pass Filter 1 – a1	PR-AEh	0x1C10'h
	EQ-Parameter	EQ High Pass Filter 1 – H0	PR-AFh	0x01F4'h
	EQ-Parameter	EQ High Pass Filter 2 – a1	PR-B0h	0x2000'h
	EQ-Parameter	EQ High Pass Filter 2 – a2	PR-B1h	0x0000'h
	EQ-Parameter	EQ High Pass Filter 2 – H0	PR-B2h	0x2000'h
DRC/AGC	DRC/AGC-1	DRC/AGC Control-1	MX-B4h	0x2206'h
	DRC/AGC-2	DRC/AGC Control-2	MX-B5h	0x1F00'h
	DRC/AGC-3	DRC/AGC Control-3	MX-B6h	0x0000'h
Jack Detection	JD	Jack Detection Control	MX-BBh	0x0000'h
IRQ	IRQ-1	IRQ Control-1	MX-BDh	0x0000'h

Type	Name	Description	Register Address	Reset State
	IRQ-2	IRQ Control-2	MX-BEh	0x0000'h
Flag Status	Status	GPIO & Internal Status	MX-BFh	0x0000'h
GPIO	GPIO-1	GPIO Control-1	MX-C0h	0x0400'h
	GPIO-2	GPIO Control-2	MX-C2h	0x0000'h
Register Array	Control-1	Register Array Control-1	MX-C8h	0x0000'h
	Control-2	Register Array Control-2	MX-C9h	0x0000'h
	Control-3	Register Array Control-3	MX-CAh	0x0000'h
	Control-4	Register Array Control-4	MX-CBh	0x0000'h
	Control-5	Register Array Control-5	MX-CCh	0x0000'h
Wind Filter	Control-1	Wind Filter Control – Enable/Disable, Sample Rate	MX-D3h	0x2A20'h
	Control-2	Wind Filter Fc Control	PR-6Eh	0x3019'h
HP Amp	HP	HP Control	MX-D6h	0x0400'h
SVOL & ZCD	SVOL & ZCD	Soft Volume and ZCD Control	MX-D9h	0x0809'h
General Control		General Control 1	MX-FAh	0x3400'h
		General Control 2	MX-FBh	0x0000'h
		Digital I/O driving Control	PR-3Ah	0x4002'h
		ADC/DAC RESET Control	PR-3Dh	0x2400'h
Vendor ID	ID	Vendor ID	MX-FEh	0x10EC'h

8.2. MX-00h: S/W Reset & Device ID

Default: 0000'h

Table 18. MX-00h: S/W Reset & Device ID

Port Name	Bits	Read/Write	Reset State	Description
Reserved	15:3	R	0'h	Reserved
Device_id	2:1	R	0'h	ALC5639
Reserved	0	R	0'h	Reserved

Note: Writes to this register will reset all registers to their default values.

8.3. MX-01h: Speaker Output Control

Default: C8C8'h

Table 19. MX-01h: Speaker Output Control

Port Name	Bits	Read/Write	Reset State	Description
mu_spo_l	15	R/W	1'h	Mute Control for Left Speaker Output Port (SPOLP/LN) 0'b: Un-Mute 1'b: Mute
Mu_spkvoll_in	14	R/W	1'h	Mute Control for Left Speaker Volume Channel (SPKVOLL) 0'b: Un-Mute 1'b: Mute
vol_spol	13:8	R/W	8'h	Left Speaker Channel Volume Control (SPKVOLL) ❶ 00'h: +12dB … 08'h: 0dB … 27'h: -46.5dB, with 1.5dB/step
mu_spo_r	7	R/W	1'h	Mute Control for Right Speaker Output Port (SPORP/RN) 0'b: Un-Mute 1'b: Mute
Mu_spkvolr_in	6	R/W	1'h	Mute Control for Right Speaker Volume Channel (SPKVOLR) 0'b: Un-Mute 1'b: Mute

Port Name	Bits	Read/Write	Reset State	Description
Vol_spor	5:0	R/W	8'h	Right Speaker Channel Volume Control (SPKVOLR) ❶ 00'h: +12dB … 08'h: 0dB … 27'h: -46.5dB, with 1.5dB/step

❶Volume Table

DEC	HEX	Boost Gain	DEC	HEX	Boost Gain	DEC	HEX	Boost Gain
0	0	12	16	10	-12	32	20	-36
1	1	10.5	17	11	-13.5	33	21	-37.5
2	2	9	18	12	-15	34	22	-39
3	3	7.5	19	13	-16.5	35	23	-40.5
4	4	6	20	14	-18	36	24	-42
5	5	4.5	21	15	-19.5	37	25	-43.5
6	6	3	22	16	-21	38	26	-45
7	7	1.5	23	17	-22.5	39	27	-46.5
8	8	0	24	18	-24			
9	9	-1.5	25	19	-25.5			
10	A	-3	26	1A	-27			
11	B	-4.5	27	1B	-28.5			
12	C	-6	28	1C	-30			
13	D	-7.5	29	1D	-31.5			
14	E	-9	30	1E	-33			
15	F	-10.5	31	1F	-34.5			

8.4. MX-02h: Headphone Output Control

Default: C8C8'h

Table 20. MX-02h: Headphone Output Control

Name	Bits	Read/Write	Reset State	Description
mu_hpo_l	15	R/W	1'h	Mute Control for Left Headphone Output Port (HPOL) 0'b: Un-Mute 1'b: Mute
Mu_hpovoll_in	14	R/W	1'h	Mute Control for Left Headphone Volume Channel (HPOVOLL) 0'b: Un-Mute 1'b: Mute
vol_hpol	13:8	R/W	8'h	Left Headphone Channel Volume Control (HPOVOLL) ❶ 00'h: +12dB … 08'h: 0dB … 27'h: -46.5dB, with 1.5dB/step
mu_hpo_r	7	R/W	1'h	Mute Control Right Headphone Output Port (HPOR) 0'b: Un-Mute 1'b: Mute
Mu_hpovolr_in	6	R/W	1'h	Mute Control for Right Headphone Volume Channel (HPOVOLR) 0'b: Un-Mute 1'b: Mute
Vol_hpor	5:0	R/W	8'h	Right Headphone Channel Volume Control (HPOVOLR)❶ 00'h: +12dB … 08'h: 0dB … 27'h: -46.5dB, with 1.5dB/step

❶Volume Table

DEC	HEX	Boost Gain	DEC	HEX	Boost Gain	DEC	HEX	Boost Gain
0	0	12	16	10	-12	32	20	-36
1	1	10.5	17	11	-13.5	33	21	-37.5
2	2	9	18	12	-15	34	22	-39
3	3	7.5	19	13	-16.5	35	23	-40.5

4	4	6	20	14	-18	36	24	-42
5	5	4.5	21	15	-19.5	37	25	-43.5
6	6	3	22	16	-21	38	26	-45
7	7	1.5	23	17	-22.5	39	27	-46.5
8	8	0	24	18	-24			
9	9	-1.5	25	19	-25.5			
10	A	-3	26	1A	-27			
11	B	-4.5	27	1B	-28.5			
12	C	-6	28	1C	-30			
13	D	-7.5	29	1D	-31.5			
14	E	-9	30	1E	-33			
15	F	-10.5	31	1F	-34.5			

8.5. MX-03h: LINE Output Control

Default: C8C8'h

Table 21. MX-03h: LINE Output Control

Name	Bits	Read/Write	Reset State	Description
Mu_lout_l	15	R/W	1'h	Mute Control for Left Line Output Port(LOUTL) 0'b: Un-Mute 1'b: Mute
Mu_outvoll_in	14	R/W	1'h	Mute Control for Left Output Volume Channel (OUTVOLL) 0'b: Un-Mute 1'b: Mute
Vol_outl	13:8	R/W	08'h	Left Output Volume Control (OUTVOLL) ❶ 00'h: +12dB … 08'h: 0dB … 27'h: -46.5dB, with 1.5dB/step
Mu_lout_r	7	R/W	1'h	Mute Control for Right Line Output Port (LOUTR) 0'b: Un-Mute 1'b: Mute
Mu_outvolr_in	6	R/W	1'h	Mute Control for Right Output Volume Channel (OUTVOLR) 0'b: Un-Mute 1'b: Mute

Name	Bits	Read/Write	Reset State	Description
Vol_outr	5:0	R/W	08'h	Right Output Volume Control ❶ 00'h: +12dB … 08'h: 0dB … 27'h: -46.5dB, with 1.5dB/step

❶Volume Table

DEC	HEX	Boost Gain	DEC	HEX	Boost Gain	DEC	HEX	Boost Gain
0	0	12	16	10	-12	32	20	-36
1	1	10.5	17	11	-13.5	33	21	-37.5
2	2	9	18	12	-15	34	22	-39
3	3	7.5	19	13	-16.5	35	23	-40.5
4	4	6	20	14	-18	36	24	-42
5	5	4.5	21	15	-19.5	37	25	-43.5
6	6	3	22	16	-21	38	26	-45
7	7	1.5	23	17	-22.5	39	27	-46.5
8	8	0	24	18	-24			
9	9	-1.5	25	19	-25.5			
10	A	-3	26	1A	-27			
11	B	-4.5	27	1B	-28.5			
12	C	-6	28	1C	-30			
13	D	-7.5	29	1D	-31.5			
14	E	-9	30	1E	-33			
15	F	-10.5	31	1F	-34.5			

8.6. MX-0Dh: IN1 Input Control

Default: 0000'h

Table 22. MX-0Dh: IN1 Input Control

Name	Bits	Read/Write	Reset State	Description
Sel_bst1	15:12	R/W	0'h	IN1 Boost Control (BST1) 0000'b: Bypass 0001'b: +20dB 0010'b: +24dB 0011'b: +30dB 0100'b: +35dB 0101'b: +40dB 0110'b: +44dB 0111'b: +50dB 1000'b: +52dB Others : Reserved
Sel_bst3	11:8	R/W	0'h	IN3 Boost Control (BST3) 0000'b: Bypass 0001'b: +20dB 0010'b: +24dB 0011'b: +30dB 0100'b: +35dB 0101'b: +40dB 0110'b: +44dB 0111'b: +50dB 1000'b: +52dB Others : Reserved
En_in1_df	7	R/W	0'h	IN1 Input Mode Control 0'b: Single Ended Mode 1'b: Differential Mode
En_in3_df	6	R/W	0'h	IN3 Input Mode Control 0'b: Single Ended Mode 1'b: Differential Mode
reserved	5:0	R/W	0'h	Reserved

8.7. MX-0Eh: IN2 Input Control

Default: 0000'h

Table 23. MX-0Eh: IN2 Input Control

Name	Bits	Read/Write	Reset State	Description
Reserved	15:12	R/W	0'h	Reserved
Sel_bst2	11:8	R/W	0'h	IN2 Boost Control (BST2) 0000'b: Bypass 0001'b: +20dB 0010'b: +24dB 0011'b: +30dB 0100'b: +35dB 0101'b: +40dB 0110'b: +44dB 0111'b: +50dB 1000'b: +52dB Others : Reserved
Reserved	7	R	0'h	Reserved
En_in2_df	6	R/W	0'h	IN2 Input Mode Control 0'b: Single Ended Mode 1'b: Differential Mode
Reserved	5:0	R	0'h	Reserved

8.8. MX-0Fh: INL & INR Volume Control

Default: 0808'h

Table 24. MX-0Fh: INL & INR Volume Control

Name	Bits	Read/Write	Reset State	Description
reserved	15:13	R	0'h	Reserved
Vol_inl	12:8	R/W	8'h	INL Channel Volume Control ❶ 00'h: +12dB … 08'h: 0dB … 1F'h: -34.5dB, with 1.5dB/step
Reserved	7:5	R	0'h	Reserved

Name	Bits	Read/Write	Reset State	Description
Vol_inr	4:0	R/W	8'h	INR Channel Volume Control ❶ 00'h: +12dB … 08'h: 0dB … 1F'h: -34.5dB, with 1.5dB/step

❶Volume Table:

DEC	HEX	Boost Gain	DEC	HEX	Boost Gain
0	0	12	16	10	-12
1	1	10.5	17	11	-13.5
2	2	9	18	12	-15
3	3	7.5	19	13	-16.5
4	4	6	20	14	-18
5	5	4.5	21	15	-19.5
6	6	3	22	16	-21
7	7	1.5	23	17	-22.5
8	8	0	24	18	-24
9	9	-1.5	25	19	-25.5
10	A	-3	26	1A	-27
11	B	-4.5	27	1B	-28.5
12	C	-6	28	1C	-30
13	D	-7.5	29	1D	-31.5
14	E	-9	30	1E	-33
15	F	-10.5	31	1F	-34.5

8.9. MX-19h: DACL/R Digital Volume

Default: AFAF'h

Table 25. MX-19h: DACL1/R1 Digital Volume

Name	Bits	Read/Write	Reset State	Description
vol_dac_l	15:8	R/W	AF'h	DAC Left Channel Digital Volume❶ 00'h: -65.625dB … AF'h: 0dB, with 0.375dB/Step

Name	Bits	Read/Write	Reset State	Description
vol_dac_r	7:0	R/W	AF'h	DAC Right Channel Digital Volume❶ 00'h: -65.625dB … AF'h: 0dB, with 0.375dB/Step

❶Volume Table:

DEC	HEX	Boost Gain	DEC	HEX	Boost Gain	DEC	HEX	Boost Gain	DEC	HEX	Boost Gain	DEC	HEX	Boost Gain
0	0	-65.625	53	35	-45.75	106	6A	-25.875	159	9F	-6	212	D4	
1	1	-65.25	54	36	-45.375	107	6B	-25.5	160	A0	-5.625	213	D5	
2	2	-64.875	55	37	-45	108	6C	-25.125	161	A1	-5.25	214	D6	
3	3	-64.5	56	38	-44.625	109	6D	-24.75	162	A2	-4.875	215	D7	
4	4	-64.125	57	39	-44.25	110	6E	-24.375	163	A3	-4.5	216	D8	
5	5	-63.75	58	3A	-43.875	111	6F	-24	164	A4	-4.125	217	D9	
6	6	-63.375	59	3B	-43.5	112	70	-23.625	165	A5	-3.75	218	DA	
7	7	-63	60	3C	-43.125	113	71	-23.25	166	A6	-3.375	219	DB	
8	8	-62.625	61	3D	-42.75	114	72	-22.875	167	A7	-3	220	DC	
9	9	-62.25	62	3E	-42.375	115	73	-22.5	168	A8	-2.625	221	DD	
10	A	-61.875	63	3F	-42	116	74	-22.125	169	A9	-2.25	222	DE	
11	B	-61.5	64	40	-41.625	117	75	-21.75	170	AA	-1.875	223	DF	
12	C	-61.125	65	41	-41.25	118	76	-21.375	171	AB	-1.5	224	E0	
13	D	-60.75	66	42	-40.875	119	77	-21	172	AC	-1.125	225	E1	
14	E	-60.375	67	43	-40.5	120	78	-20.625	173	AD	-0.75	226	E2	
15	F	-60	68	44	-40.125	121	79	-20.25	174	AE	-0.375	227	E3	
16	10	-59.625	69	45	-39.75	122	7A	-19.875	175	AF	0	228	E4	
17	11	-59.25	70	46	-39.375	123	7B	-19.5	176	B0		229	E5	
18	12	-58.875	71	47	-39	124	7C	-19.125	177	B1		230	E6	
19	13	-58.5	72	48	-38.625	125	7D	-18.75	178	B2		231	E7	
20	14	-58.125	73	49	-38.25	126	7E	-18.375	179	B3		232	E8	
21	15	-57.75	74	4A	-37.875	127	7F	-18	180	B4		233	E9	
22	16	-57.375	75	4B	-37.5	128	80	-17.625	181	B5		234	EA	
23	17	-57	76	4C	-37.125	129	81	-17.25	182	B6		235	EB	
24	18	-56.625	77	4D	-36.75	130	82	-16.875	183	B7		236	EC	
25	19	-56.25	78	4E	-36.375	131	83	-16.5	184	B8		237	ED	
26	1A	-55.875	79	4F	-36	132	84	-16.125	185	B9		238	EE	
27	1B	-55.5	80	50	-35.625	133	85	-15.75	186	BA		239	EF	
28	1C	-55.125	81	51	-35.25	134	86	-15.375	187	BB		240	F0	

29	1D	-54.75	82	52	-34.875	135	87	-15	188	BC		241	F1	
30	1E	-54.375	83	53	-34.5	136	88	-14.625	189	BD		242	F2	
31	1F	-54	84	54	-34.125	137	89	-14.25	190	BE		243	F3	
32	20	-53.625	85	55	-33.75	138	8A	-13.875	191	BF		244	F4	
33	21	-53.25	86	56	-33.375	139	8B	-13.5	192	C0		245	F5	
34	22	-52.875	87	57	-33	140	8C	-13.125	193	C1		246	F6	
35	23	-52.5	88	58	-32.625	141	8D	-12.75	194	C2		247	F7	
36	24	-52.125	89	59	-32.25	142	8E	-12.375	195	C3		248	F8	
37	25	-51.75	90	5A	-31.875	143	8F	-12	196	C4		249	F9	
38	26	-51.375	91	5B	-31.5	144	90	-11.625	197	C5		250	FA	
39	27	-51	92	5C	-31.125	145	91	-11.25	198	C6		251	FB	
40	28	-50.625	93	5D	-30.75	146	92	-10.875	199	C7		252	FC	
41	29	-50.25	94	5E	-30.375	147	93	-10.5	200	C8		253	FD	
42	2A	-49.875	95	5F	-30	148	94	-10.125	201	C9		254	FE	
43	2B	-49.5	96	60	-29.625	149	95	-9.75	202	CA		255	FF	
44	2C	-49.125	97	61	-29.25	150	96	-9.375	203	CB				
45	2D	-48.75	98	62	-28.875	151	97	-9	204	CC				
46	2E	-48.375	99	63	-28.5	152	98	-8.625	205	CD				
47	2F	-48	100	64	-28.125	153	99	-8.25	206	CE				
48	30	-47.625	101	65	-27.75	154	9A	-7.875	207	CF				
49	31	-47.25	102	66	-27.375	155	9B	-7.5	208	D0				
50	32	-46.875	103	67	-27	156	9C	-7.125	209	D1				
51	33	-46.5	104	68	-26.625	157	9D	-6.75	210	D2				
52	34	-46.125	105	69	-26.25	158	9E	-6.375	211	D3				

8.10. MX-1Ch: Stereo ADC Digital Volume Control

Default: 2F2F'h

Table 26. MX-1Ch: Stereo ADC Digital Volume Control

Name	Bits	Read/Write	Reset State	Description
Mu_adc_vol_l	15	R/W	0'h	Mute Control for Stereo ADC Left Volume Channel 0'b: Un-Mute 1'b: Mute

Ad_gain_l	14:8	R/W	2F'h	Stereo ADC Left Channel Volume Control ❶ 00'h: -17.625dB … 2F'h: 0dB … 7F'h: +30dB, with 0.375dB/Step
Mu_adc_vol_r	7	R/W	0'h	Mute Control for Stereo ADC Right Volume Channel 0'b: Un-Mute 1'b: Mute
Ad_gain_r	6:0	R/W	2F'h	Stereo ADC Right Channel Volume Control ❶ 00'h: -17.625dB … 2F'h: 0dB … 7F'h: +30dB, with 0.375dB/Step

8.11. MX-1Dh: Mono ADC Digital Volume Control

Default: 2F2F'h

Table 27. MX-1Dh: Mono ADC Digital Volume Control

Name	Bits	Read/Write	Reset State	Description
reserved	15	R	0'h	Reserved
Mono_ad_gain_l	14:8	R/W	2F'h	Mono ADC Left Channel Volume Control ❶ 00'h: -17.625dB … 2F'h: 0dB … 7F'h: +30dB, with 0.375dB/Step
reserved	7	R	0'h	Reserved
Mono_ad_gain_r	6:0	R/W	2F'h	Mono ADC Right Channel Volume Control ❶ 00'h: -17.625dB … 2F'h: 0dB … 7F'h: +30dB, with 0.375dB/Step

❶Volume Table:

DEC	HEX	Boost Gain	DEC	HEX	Boost Gain	DEC	HEX	Boost Gain	DEC	HEX	Boost Gain	DEC	HEX	Boost Gain
0	0	-17.625	26	1A	-7.875	52	34	1.875	78	4E	11.625	104	68	21.375
1	1	-17.25	27	1B	-7.5	53	35	2.25	79	4F	12	105	69	21.75
2	2	-16.875	28	1C	-7.125	54	36	2.625	80	50	12.375	106	6A	22.125
3	3	-16.5	29	1D	-6.75	55	37	3	81	51	12.75	107	6B	22.5
4	4	-16.125	30	1E	-6.375	56	38	3.375	82	52	13.125	108	6C	22.875
5	5	-15.75	31	1F	-6	57	39	3.75	83	53	13.5	109	6D	23.25
6	6	-15.375	32	20	-5.625	58	3A	4.125	84	54	13.875	110	6E	23.625
7	7	-15	33	21	-5.25	59	3B	4.5	85	55	14.25	111	6F	24
8	8	-14.625	34	22	-4.875	60	3C	4.875	86	56	14.625	112	70	24.375
9	9	-14.25	35	23	-4.5	61	3D	5.25	87	57	15	113	71	24.75
10	A	-13.875	36	24	-4.125	62	3E	5.625	88	58	15.375	114	72	25.125
11	B	-13.5	37	25	-3.75	63	3F	6	89	59	15.75	115	73	25.5
12	C	-13.125	38	26	-3.375	64	40	6.375	90	5A	16.125	116	74	25.875
13	D	-12.75	39	27	-3	65	41	6.75	91	5B	16.5	117	75	26.25
14	E	-12.375	40	28	-2.625	66	42	7.125	92	5C	16.875	118	76	26.625
15	F	-12	41	29	-2.25	67	43	7.5	93	5D	17.25	119	77	27
16	10	-11.625	42	2A	-1.875	68	44	7.875	94	5E	17.625	120	78	27.375
17	11	-11.25	43	2B	-1.5	69	45	8.25	95	5F	18	121	79	27.75
18	12	-10.875	44	2C	-1.125	70	46	8.625	96	60	18.375	122	7A	28.125
19	13	-10.5	45	2D	-0.75	71	47	9	97	61	18.75	123	7B	28.5
20	14	-10.125	46	2E	-0.375	72	48	9.375	98	62	19.125	124	7C	28.875
21	15	-9.75	47	2F	0	73	49	9.75	99	63	19.5	125	7D	29.25
22	16	-9.375	48	30	0.375	74	4A	10.125	100	64	19.875	126	7E	29.625
23	17	-9	49	31	0.75	75	4B	10.5	101	65	20.25	127	7F	30
24	18	-8.625	50	32	1.125	76	4C	10.875	102	66	20.625			
25	19	-8.25	51	33	1.5	77	4D	11.25	103	67	21			

8.12. MX-1Eh: ADC Digital Boost Gain Control

Default: 0000'h

Table 28. MX-1Eh: ADC Digital Boost Gain Control

Name	Bits	Read/Write	Reset State	Description
Ad_boost_gain_l	15:14	R/W	0'h	ADC Left Channel Digital Boost Gain 00'b: 0dB 01'b: 12dB 10'b: 24dB 11'b: 36dB
Ad_boost_gain_r	13:12	R/W	0'h	ADC Right Channel Digital Boost Gain 00'b: 0dB 01'b: 12dB 10'b: 24dB 11'b: 36dB
reserved	11:0	R/W	0'h	Reserved

8.13. MX-27h: Stereo ADC Digital Mixer Control

Default: 7060'h

Table 29. MX-27h: Stereo ADC Digital Mixer Control

Name	Bits	Read/Write	Reset State	Description
reserved	15	R	0'h	reserved
mu_stereo_adcl1	14	R/W	1'h	Mute Control for Stereo ADC1 Left Channel 0'b: Un-Mute 1'b: Mute
mu_stereo_adcl2	13	R/W	1'h	Mute Control for Stereo ADC2 Left Channel 0'b: Un-Mute 1'b: Mute
sel_stereo_adc1	12	R/W	1'h	Select Control for Stereo ADC1 Source 0'b: DAC_MIXL/ DAC_MIXR 1'b: ADCL/ADCR
sel_stereo_adc2	11:10	R/W	0'h	Select Control for Stereo ADC2 Source 00'b: DMIC_L1/ DMIC_R1 01'b: DMIC_L2/ DMIC_R2 10'b: DAC_MIXL/ DAC_MIXR 11'b: Reserved
reserved	9:7	R	0'h	Reserved
mu_stereo_adcr1	6	R/W	1'h	Mute Control for Stereo ADC1 Right Channel 0'b: Un-Mute 1'b: Mute

mu_stereo_adcr2	5	R/W	1'h	Mute Control for Stereo ADC2 Right Channel 0'b: Un-Mute 1'b: Mute
reserved	4:0	R	0'h	reserved

8.14. MX-28h: Mono ADC Digital Mixer Control

Default: 7070'h

Table 30. MX-28h: Mono ADC Digital Mixer Control

Name	Bits	Read/Write	Reset State	Description
reserved	15	R	0'h	reserved
mu_mono_adcl1	14	R/W	1'h	Mute Control for Mono ADC1 Left Channel 0'b: Un-Mute 1'b: Mute
mu_mono_adcl2	13	R/W	1'h	Mute Control for Mono ADC2 Left Channel 0'b: Un-Mute 1'b: Mute
sel_mono_adcl1	12	R/W	1'h	Select Control for Mono ADC1 Left Channel Source 0'b: Mono_DAC_Mixer_L 1'b: ADCL
sel_mono_adcl2	11:10	R/W	0'h	Select Control for Mono ADC2 Left Channel Source 00'b: DMIC_L1 01'b: DMIC_L2 10'b: Mono_DAC_Mixer_L 11'b: Reserved
reserved	9:7	R	0'h	reserved
mu_mono_adcr1	6	R/W	1'h	Mute Control for Mono ADC1 Right Channel 0'b: Un-Mute 1'b: Mute
mu_mono_adcr2	5	R/W	1'h	Mute Control for Mono ADC2 Right Channel 0'b: Un-Mute 1'b: Mute
sel_mono_adcr1	4	R/W	1'h	Select Control for Mono ADC1 Right Channel Source 0'b: Mono_DAC_Mixer_R 1'b: ADCR
sel_mono_adcr2	3:2	R/W	0'h	Select Control for Mono ADC2 Right Channel Source 00'b: DMIC_R1 01'b: DMIC_R2 10'b: Mono_DAC_Mixer_R 11'b: Reserved
reserved	1:0	R	0'h	Reserved

8.15. MX-29h: Stereo ADC to DAC Digital Mixer Control

Default: 8080'h

Table 31. MX-29h: Stereo ADC to DAC Digital Mixer Control

Name	Bits	Read/Write	Reset State	Description
mu_stereo_adc_mixer_l	15	R/W	1'h	Mute Control for Stereo ADC Left Channel to DAC 0'b: Un-Mute 1'b: Mute
mu_if1_dac_l	14	R/W	0'h	Mute Control for I2S-1 to DAC Left Channel 0'b: Un-Mute 1'b: Mute
reserved	13:8	R	0'h	Reserved
mu_stereo_adc_mixer_r	7	R/W	1'h	Mute Control for Stereo ADC Right Channel to DAC 0'b: Un-Mute 1'b: Mute
mu_if1_dac_r	6	R/W	0'h	Mute Control for I2S-1 to DAC Right Channel 0'b: Un-Mute 1'b: Mute
reserved	5:0	R	0'h	reserved

8.16. MX-2Ah: Stereo DAC Digital Mixer Control

Default: 5454'h

Table 32. MX-2Ah: Stereo DAC Digital Mixer Control

Name	Bits	Read/Write	Reset State	Description
reserved	15	R	0'h	reserved
mu_stereo_dacl1	14	R/W	1'h	Mute Control for DACL1 to Stereo DAC Left Mixer 0'b: Un-Mute 1'b: Mute
gain_dacl1_to_stereo_l	13	R/W	0'h	Gain Control for DACL1 to Stereo DAC Left Mixer 0'b: 0dB 1'b: -6dB
mu_stereo_dacl2	12	R/W	1'h	Mute Control for DACL2 to Stereo DAC Left Mixer 0'b: Un-Mute 1'b: Mute
gain_dacl2_to_stereo_l	11	R/W	0'h	Gain Control for DACL2 to Stereo DAC Left Mixer 0'b: 0dB 1'b: -6dB
reserved	10:7	R	20'h	reserved
mu_stereo_dacr1	6	R/W	1'h	Mute Control for DACR1 to Stereo DAC Right Mixer 0'b: Un-Mute 1'b: Mute
gain_dacr1_to_stereo_r	5	R/W	0'h	Gain Control for DACR1 to Stereo DAC Right Mixer 0'b: 0dB 1'b: -6dB

Name	Bits	Read/Write	Reset State	Description
mu_stereo_dacr2	4	R/W	1'h	Mute Control for DACR2 to Stereo DAC Right Mixer 0'b: Un-Mute 1'b: Mute
gain_dacr2_to_stereo_r	3	R/W	0'h	Gain Control for DACR2 to Stereo DAC Right Mixer 0'b: 0dB 1'b: -6dB
reserved	2:0	R	0'h	reserved

8.17. MX-2Bh: Mono DAC Digital Mixer Control

Default: 5454'h

Table 33. MX-2Bh: Mono DAC Digital Mixer Control

Name	Bits	Read/Write	Reset State	Description
reserved	15	R	0'h	Reserved
mu_mono_l_dacl1	14	R/W	1'h	Mute Control for DACL1 to Mono DAC Mixer 0'b: Un-Mute 1'b: Mute
gain_mono_l_dacl1	13	R/W	0'h	Gain Control for DACL1 to Mono DAC Mixer 0'b: 0dB 1'b: -6dB
mu_mono_l_dacl2	12	R/W	1'h	Mute Control for DACL2 to Mono DAC Mixer 0'b: Un-Mute 1'b: Mute
gain_mono_l_dacl2	11	R/W	0'h	Gain Control for DACL2 to Mono DAC Mixer 0'b: 0dB 1'b: -6dB
mu_mono_l_dacr2	10	R/W	1'h	Mute Control for DACR2 to Mono DAC Mixer 0'b: Un-Mute 1'b: Mute
gain_mono_l_dacr2	9	R/W	0'h	Gain Control for DACR2 to Mono DAC Mixer 0'b: 0dB 1'b: -6dB
reserved	8:7	R	0'h	Reserved
mu_mono_r_dacr1	6	R/W	1'h	Mute Control for DACR1 to Mono DAC Mixer 0'b: Un-Mute 1'b: Mute
gain_mono_r_dacr1	5	R/W	0'h	Gain Control for DACR1 to Mono DAC Mixer 0'b: 0dB 1'b: -6dB
mu_mono_r_dacr2	4	R/W	1'h	Mute Control for DACR2 to Mono DAC Mixer 0'b: Un-Mute 1'b: Mute
gain_mono_r_dacr2	3	R/W	0'h	Gain Control for DACR2 to Mono DAC Mixer 0'b: 0dB 1'b: -6dB

Name	Bits	Read/Write	Reset State	Description
mu_mono_r_dacl2	2	R/W	1'h	Mute Control for DACL2 to Mono DAC Mixer 0'b: Un-Mute 1'b: Mute
gain_mono_r_dacl2	1	R/W	0'h	Gain Control for DACL2 to Mono DAC Mixer 0'b: 0dB 1'b: -6dB
reserved	0	R	0'h	reserved

8.18. MX-2Ch: DAC Digital Mixer Control

Default: AA00'h

Table 34. MX-2Ch: DAC Digital Mixer Control

Name	Bits	Read/Write	Reset State	Description
mu_dacl1_to_dacl	15	R/W	1'h	Mute Control for DACL1 to DACMIXL 0'b: Un-Mute 1'b: Mute
gain_dacl1_to_dacl	14	R/W	0'h	Gain Control for DACL1 to DACMIXL 0'b: 0dB 1'b: -6dB
mu_dacl2_to_dacl	13	R/W	1'h	Mute Control for DACL2 to DACMIXL 0'b: Un-Mute 1'b: Mute
gain_dacl2_to_dacl	12	R/W	0'h	Gain Control for DACL2 to DACMIXL 0'b: 0dB 1'b: -6dB
mu_dacr1_to_dacr	11	R/W	1'h	Mute Control for DACR1 to DACMIXR 0'b: Un-Mute 1'b: Mute
gain_dacr1_to_dacr	10	R/W	0'h	Gain Control for DACR1 to DACMIXR 0'b: 0dB 1'b: -6dB
mu_dacr2_to_dacr	9	R/W	1'h	Mute Control for DACR2 to DACMIXR 0'b: Un-Mute 1'b: Mute
gain_dacr2_to_dacr	8	R/W	0'h	Gain Control for DACR2 to DACMIXR 0'b: 0dB 1'b: -6dB
reserved	7:0	R	0'h	reserved

8.19. MX-2Fh: Interface DAC/ADC Data Control

Default: 0000'h

Table 35. MX-2Fh: Interface DAC/ADC Data Control

Name	Bits	Read/Write	Reset State	Description
sel_if1_dac_data	15:14	R/W	0'h	Select Control for I2S1 DACDAT Data 00'b: Normal 01'b: Swap 10'b: Left Channel Copy to Right Channel 11'b: Right Channel Copy to Left Channel
sel_if1_adc_data	13:12	R/W	0'h	Select Control for I2S1 ADCDAT Data 00'b: Normal 01'b: Swap 10'b: Left Channel Copy to Right Channel 11'b: Right Channel Copy to Left Channel
sel_if2_dac_data	11:10	R/W	0'h	Select Control for I2S2 DACDAT Data 00'b: Normal 01'b: Swap 10'b: Left Channel Copy to Right Channel 11'b: Right Channel Copy to Left Channel
sel_if2_adc_data	9:8	R/W	0'h	Select Control for I2S2 ADCDAT Data 00'b: Normal 01'b: Swap 10'b: Left Channel Copy to Right Channel 11'b: Right Channel Copy to Left Channel
reserved	7:0	R	0'h	reserved

8.20. MX-3Bh: RECMIXL Control 1

Default: 0000'h

Table 36. MX-3Bh: RECMIXL Control 1

Name	Bits	Read/Write	Reset State	Description
reserved	15:13	R	0'h	reserved
Gain_inl_recmixl	12:10	R/W	0'h	Gain Control for INL to RECMIXL 000'b: 0dB 001'b: -3dB 010'b: -6dB 011'b: -9dB 100'b: -12dB 101'b: -15dB 110'b: -18dB

Name	Bits	Read/Write	Reset State	Description
Gain_bst2_recmixl	9:7	R/W	0'h	Gain Control for BST2 to RECMIXL 000'b: 0dB 001'b: -3dB 010'b: -6dB 011'b: -9dB 100'b: -12dB 101'b: -15dB 110'b: -18dB
Reserved	6:4	R	0'h	Reserved
Gain_bst3_recmixl	3:1	R/W	0'h	Gain Control for BST3 to RECMIXL 000'b: 0dB 001'b: -3dB 010'b: -6dB 011'b: -9dB 100'b: -12dB 101'b: -15dB 110'b: -18dB
reserved	0	R	0'h	reserved

8.21. MX-3Ch: RECMIXL Control 2

Default: 007F'h

Table 37. MX-3Ch: RECMIXL Control 2

Name	Bits	Read/Write	Reset State	Description
Gain_bst1_recmixl	15:13	R/W	0'h	Gain Control for BST1 to RECMIXL 000'b: 0dB 001'b: -3dB 010'b: -6dB 011'b: -9dB 100'b: -12dB 101'b: -15dB 110'b: -18dB
Gain_outmixl_recmixl	12:10	R/W	0'h	Gain Control for OUTMIXL to RECMIXL 000'b: 0dB 001'b: -3dB 010'b: -6dB 011'b: -9dB 100'b: -12dB 101'b: -15dB 110'b: -18dB
reserved	9:6	R	0'h	reserved
Mu_inl_rexmixl	5	R/W	1'h	Mute Control for INL to RECMIXL 0'b: Un-Mute 1'b: Mute
Mu_bst2_recmixl	4	R/W	1'h	Mute Control for BST2 to RECMIXL 0'b: Un-Mute 1'b: Mute
reserved	3	R/W	1'h	reserved

Name	Bits	Read/Write	Reset State	Description
Mu_bst3_recmixl	2	R/W	1'h	Mute Control for BST3 to RECMIXL 0'b: Un-Mute 1'b: Mute
Mu_bst1_recmixl	1	R/W	1'h	Mute Control for BST1 to RECMIXL 0'b: Un-Mute 1'b: Mute
Mu_outmixl_recmixl	0	R/W	1'h	Mute Control for OUTMIXL to RECMIXL 0'b: Un-Mute 1'b: Mute

8.22. MX-3Dh: RECMIXR Control 1

Default: 0000'h

Table 38. MX-3Dh: RECMIXR Control 1

Name	Bits	Read/Write	Reset State	Description
reserved	15:13	R/W	0'h	Reserved
Gain_inr_recmixr	12:10	R/W	0'h	Gain Control for INR to RECMIXR 000'b: 0dB 001'b: -3dB 010'b: -6dB 011'b: -9dB 100'b: -12dB 101'b: -15dB 110'b: -18dB
Gain_bst2_recmixr	9:7	R/W	0'h	Gain Control for BST2 to RECMIXR 000'b: 0dB 001'b: -3dB 010'b: -6dB 011'b: -9dB 100'b: -12dB 101'b: -15dB 110'b: -18dB
Reserved	6:4	R	0'h	Reserved
Gain_bst3_recmixr	3:1	R/W	0'h	Gain Control for BST3 to RECMIXR 000'b: 0dB 001'b: -3dB 010'b: -6dB 011'b: -9dB 100'b: -12dB 101'b: -15dB 110'b: -18dB
reserved	0	R	0'h	Reserved

8.23. MX-3Eh: RECMIXR Control 2

Default: 007F'h

Table 39. MX-3Eh: RECMIXR Control 2

Name	Bits	Read/Write	Reset State	Description
Gain_bst1_recmixr	15:13	R/W	0'h	Gain Control for BST1 to RECMIXR 000'b: 0dB 001'b: -3dB 010'b: -6dB 011'b: -9dB 100'b: -12dB 101'b: -15dB 110'b: -18dB
Gain_outmixr_recmixr	12:10	R/W	0'h	Gain Control for OUTMIXR to RECMIXR 000'b: 0dB 001'b: -3dB 010'b: -6dB 011'b: -9dB 100'b: -12dB 101'b: -15dB 110'b: -18dB
reserved	9:6	R	0'h	reserved
Mu_inr_rexmixr	5	R/W	1'h	Mute Control for INR to RECMIXR 0'b: Un-Mute 1'b: Mute
Mu_bst2_recmixr	4	R/W	1'h	Mute Control for BST2 to RECMIXR 0'b: Un-Mute 1'b: Mute
Reserved	3	R/W	1'h	reserved
Mu_bst3_recmixr	2	R/W	1'h	Mute Control for BST3 to RECMIXR 0'b: Un-Mute 1'b: Mute
Mu_bst1_recmixr	1	R/W	1'h	Mute Control for BST1 to RECMIXR 0'b: Un-Mute 1'b: Mute
Mu_outmixr_recmixr	0	R/W	1'h	Mute Control for OUTMIXR to RECMIXR 0'b: Un-Mute 1'b: Mute

8.24. MX-45h: HPOMIX Control

Default: E000'h

Table 40. MX-45h: HPOMIX Control

Name	Bits	Read/Write	Reset State	Description
Reserved	15	R/W	1'h	Reserved

Name	Bits	Read/Write	Reset State	Description
mu_dac1_hpomix	14	R/W	1'h	Mute Control for DAC1 to HPOMIX 0'b: Un-Mute 1'b: Mute
mu_hpovol_hpomix	13	R/W	1'h	Mute Control for HPOVOL to HPOMIX 0'b: Un-Mute 1'b: Mute
Gain_hpomix	12	R/W	0'h	Gain Control for HPOMIX 0'b: 0dB 1'b: -6dB
Reserved	11:0	R	0'h	reserved

8.25. MX-46h: SPKMIXL Control

Default: 003E'h

Table 41. MX-46h: SPKMIXL Control

Name	Bits	Read/Write	Reset State	Description
gain_recmixl_spkmixl	15:14	R/W	0'h	Gain Control for RECMIXL to SPKMIXL 00'b: 0dB 01'b: -3dB 10'b: -6dB 11'b: -9dB
Gain_inl_spkmixl	13:12	R/W	0'h	Gain Control for INL to SPKMIXL 00'b: 0dB 01'b: -3dB 10'b: -6dB 11'b: -9dB
Gain_dacl1_spkmixl	11:10	R/W	0'h	Gain Control for DACL1 to SPKMIXL 00'b: 0dB 01'b: -3dB 10'b: -6dB 11'b: -9dB
Reserved	9:8	R/W	0'h	Reserved
Gain_outmixl_spkmixl	7:6	R/W	0'h	Gain Control for OUTMIXL to SPKMIXL 00'b: 0dB 01'b: -3dB 10'b: -6dB 11'b: -9dB
Mu_recmix1_spkmixl	5	R/W	1'h	Mute Control for RECMIXL to SPKMIXL 0'b: Un-Mute 1'b: Mute
Mu_inl_spkmixl	4	R/W	1'h	Mute Control for INL to SPKMIXL 0'b: Un-Mute 1'b: Mute
Mu_dacl1_spkmixl	3	R/W	1'h	Mute Control for DACL1 to SPKMIXL 0'b: Un-Mute 1'b: Mute

Name	Bits	Read/Write	Reset State	Description
Reserved	2	R/W	1'h	Reserved
Mu_outmixl_spkmixl	1	R/W	1'h	Mute Control for OUTMIXL to SPKMIXL 0'b: Un-Mute 1'b: Mute
Reserved	0	R	0'h	Reserved

8.26. MX-47h: SPKMIXR Control

Default: 003E'h

Table 42. MX-47h: SPKMIXR Control

Name	Bits	Read/Write	Reset State	Description
gain_recmixr_spkmixr	15:14	R/W	0'h	Gain Control for RECMIXR to SPKMIXR 00'b: 0dB 01'b: -3dB 10'b: -6dB 11'b: -9dB
Gain_inr_spkmixr	13:12	R/W	0'h	Gain Control for INR to SPKMIXR 00'b: 0dB 01'b: -3dB 10'b: -6dB 11'b: -9dB
Gain_dacr1_spkmixr	11:10	R/W	0'h	Gain Control for DACR1 to SPKMIXR 00'b: 0dB 01'b: -3dB 10'b: -6dB 11'b: -9dB
Reserved	9:8	R/W	0'h	Reserved
Gain_outmixr_spkmixr	7:6	R/W	0'h	Gain Control for OUTMIXR to SPKMIXR 00'b: 0dB 01'b: -3dB 10'b: -6dB 11'b: -9dB
Mu_recmixr_spkmixr	5	R/W	1'h	Mute Control for RECMIXR to SPKMIXR 0'b: Un-Mute 1'b: Mute
Mu_inr_spkmixr	4	R/W	1'h	Mute Control for INR to SPKMIXR 0'b: Un-Mute 1'b: Mute
Mu_dacr1_spkmixr	3	R/W	1'h	Mute Control for DACR1 to SPKMIXR 0'b: Un-Mute 1'b: Mute
Reserved	2	R/W	1'h	Reserved
Mu_outmixr_spkmixr	1	R/W	1'h	Mute Control for OUTMIXR to SPKMIXR 0'b: Un-Mute 1'b: Mute
Reserved	0	R	0'h	Reserved

8.27. MX-48h: SPOLMIX Control

Default: F800'h

Table 43. MX-48h: SPOLMIX Control

Name	Bits	Read/Write	Reset State	Description
Mu_dacr1_spolmix	15	R/W	1'h	Mute Control for DACR1 to SPOLMIX 0'b: Un-Mute 1'b: Mute
Mu_dacl1_spolmix	14	R/W	1'h	Mute Control for DACL1 to SPOLMIX 0'b: Un-Mute 1'b: Mute
Mu_spkvolr_spolmix	13	R/W	1'h	Mute Control for SPKVOLR to SPOLMIX 0'b: Un-Mute 1'b: Mute
Mu_spkvoll_spolmix	12	R/W	1'h	Mute Control for SPKVOLL to SPOLMIX 0'b: Un-Mute 1'b: Mute
Mu_bst1_spolmix	11	R/W	1'h	Mute Control for BST1 to SPOLMIX 0'b: Un-Mute 1'b: Mute
reserved	10:0	R	0'h	Reserved

8.28. MX-49h: SPORMIX Control

Default: 3800'h

Table 44. MX-49h: SPORMIX Control

Name	Bits	Read/Write	Reset State	Description
reserved	15:14	R	0'h	Reserved
Mu_dacr1_spormix	13	R/W	1'h	Mute Control for DACR1 to SPORMIX 0'b: Un-Mute 1'b: Mute
Mu_spkvolr_spormix	12	R/W	1'h	Mute Control for SPKVOLR to SPORMIX 0'b: Un-Mute 1'b: Mute
Mu_bst1_spormix	11	R/W	1'h	Mute Control for BST1 to SPORMIX 0'b: Un-Mute 1'b: Mute
reserved	10:0	R	0'h	Reserved

8.29. MX-4Ah: SPOL/RMIX Gain Control

Default: 0004'h

Table 45. MX-4Ah: SPOL/RMIX Gain Control

Name	Bits	Read/Write	Reset State	Description
reserved	15:3	R	0'h	Reserved
Spk_gain_clsd	2:0	R/W	4'h	Gain Control for SPOL/RMIX 000'b: -6dB (0.50x) 001'b: -4.5dB (0.60x) 010'b: -3dB (0.71x) 011'b: -1.5dB (0.84x) 100'b: 0dB (1.0x) 101'b: 0.83dB (1.1x) 110'b: 1.58dB (1.2x) 111'b: 2.28dB (1.3x)

8.30. MX-4Dh: OUTMIXL Control 1

Default: 0000'h

Table 46. MX-4Dh: OUTMIXL Control 1

Name	Bits	Read/Write	Reset State	Description
reserved	15:10	R/W	0'h	Reserved
Gain_bst1_outmixl	9:7	R/W	0'h	Gain Control for BST1 to OUTMIXL 000'b: 0dB 001'b: -3dB 010'b: -6dB 011'b: -9dB 100'b: -12dB 101'b: -15dB 110'b: -18dB Others: reserved
Gain_inl_outmixl	6:4	R/W	0'h	Gain Control for INL to OUTMIXL 000'b: 0dB 001'b: -3dB 010'b: -6dB 011'b: -9dB 100'b: -12dB 101'b: -15dB 110'b: -18dB Others: reserved

Name	Bits	Read/Write	Reset State	Description
Gain_recmixl_outmixl	3:1	R/W	0'h	Gain Control for RECMIXL to OUTMIXL 000'b: 0dB 001'b: -3dB 010'b: -6dB 011'b: -9dB 100'b: -12dB 101'b: -15dB 110'b: -18dB Others: reserved
Reserved	0	R	0'h	reserved

8.31. MX-4Eh: OUTMIXL Control 2

Default: 0000'h

Table 47. MX-4Eh: OUTMIXL Control 2

Name	Bits	Read/Write	Reset State	Description
Reserved	15:10	R/W	0'h	Reserved
Gain_dacl1_outmixl	9:7	R/W	0'h	Gain Control for DACL1 to OUTMIXL 000'b: 0dB 001'b: -3dB 010'b: -6dB 011'b: -9dB 100'b: -12dB 101'b: -15dB 110'b: -18dB Others: reserved
reserved	6:0	R	0'h	Reserved

8.32. MX-4Fh: OUTMIXL Control 3

Default: 01FF'h

Table 48. MX-4Fh: OUTMIXL Control 3

Name	Bits	Read/Write	Reset State	Description
reserved	15:6	R	F'h	Reserved
Mu_bst1_outmixl	5	R/W	1'h	Mute Control for BST1 to OUTMIXL 0'b: Un-Mute 1'b: Mute
Mu_inl_outmixl	4	R/W	1'h	Mute Control for INL to OUTMIXL 0'b: Un-Mute 1'b: Mute
Mu_recmixl_outmixl	3	R/W	1'h	Mute Control for RECMIXL to OUTMIXL 0'b: Un-Mute 1'b: Mute
Reserved	2:1	R/W	3'h	Reserved

Name	Bits	Read/Write	Reset State	Description
Mu_dacl1_outmixl	0	R/W	1'h	Mute Control for DACL1 to OUTMIXL 0'b: Un-Mute 1'b: Mute

8.33. MX-50h: OUTMIXR Control 1

Default: 0000'h

Table 49. MX-50h: OUTMIXR Control 1

Name	Bits	Read/Write	Reset State	Description
Gain_bst2_outmixr	15:13	R/W	0'h	Gain Control for BST2 to OUTMIXR 000'b: 0dB 001'b: -3dB 010'b: -6dB 011'b: -9dB 100'b: -12dB 101'b: -15dB 110'b: -18dB Others: reserved
reserved	12:10	R/W	0'h	Reserved
Gain_bst1_outmixr	9:7	R/W	0'h	Gain Control for BST1 to OUTMIXR 000'b: 0dB 001'b: -3dB 010'b: -6dB 011'b: -9dB 100'b: -12dB 101'b: -15dB 110'b: -18dB Others: reserved
Gain_inr_outmixr	6:4	R/W	0'h	Gain Control for INR to OUTMIXR 000'b: 0dB 001'b: -3dB 010'b: -6dB 011'b: -9dB 100'b: -12dB 101'b: -15dB 110'b: -18dB Others: reserved
Gain_recmixr_outmixr	3:1	R/W	0'h	Gain Control for RECMIXR to OUTMIXR 000'b: 0dB 001'b: -3dB 010'b: -6dB 011'b: -9dB 100'b: -12dB 101'b: -15dB 110'b: -18dB Others: reserved
reserved	0	R	0'h	Reserved

8.34. MX-51h: OUTMIXR Control 2

Default: 0000'h

Table 50. MX-51h: OUTMIXR Control 2

Name	Bits	Read/Write	Reset State	Description
Reserved	15:10	R/W	0'h	Reserved
Gain_dacr1_outmixr	9:7	R/W	0'h	Gain Control for DACR1 to OUTMIXR 000'b: 0dB 001'b: -3dB 010'b: -6dB 011'b: -9dB 100'b: -12dB 101'b: -15dB 110'b: -18dB Others: reserved
reserved	6:0	R	0'h	Reserved

8.35. MX-52h: OUTMIXR Control 3

Default: 01FF'h

Table 51. MX-52h: OUTMIXR Control 3

Name	Bits	Read/Write	Reset State	Description
reserved	15:8	R/W	1'h	Reserved
Mu_bst2_outmixr	7	R/W	1'h	Mute Control for BST2 to OUTMIXR 0'b: Un-Mute 1'b: Mute
reserved	6	R/W	1'h	Reserved
Mu_bst1_outmixr	5	R/W	1'h	Mute Control for BST1 to OUTMIXR 0'b: Un-Mute 1'b: Mute
Mu_inr_outmixr	4	R/W	1'h	Mute Control for INR to OUTMIXR 0'b: Un-Mute 1'b: Mute
Mu_recmixr_outmixr	3	R/W	1'h	Mute Control for RECMIXR to OUTMIXR 0'b: Un-Mute 1'b: Mute
reserved	2:1	R/W	3'h	Reserved
Mu_dacr1_outmixr	0	R/W	1'h	Mute Control for DACR1 to OUTMIXR 0'b: Un-Mute 1'b: Mute

8.36. MX-53h: LOUTMIX Control

Default: F000'h

Table 52. MX-53h: LOUTMIX Control

Name	Bits	Read/Write	Reset State	Description
Mu_dacl1_lout	15	R/W	1'h	Mute Control for DACL1 to LOUTMIX 0'b: Un-Mute 1'b: Mute
Mu_dacr1_lout	14	R/W	1'h	Mute Control for DACR1 to LOUTMIX 0'b: Un-Mute 1'b: Mute
Mu_outvoll_lout	13	R/W	1'h	Mute Control for OUTVOLL to LOUTMIX 0'b: Un-Mute 1'b: Mute
Mu_outvolr_lout	12	R/W	1'h	Mute Control for OUTVOLR to LOUTMIX 0'b: Un-Mute 1'b: Mute
Gain_lout	11	R/W	0'h	Gain Control for LOUTMIX 0'b: 0dB 1'b: -6dB
reserved	10:0	R/W	0'h	Reserved

8.37. MX-61h: Power Management Control 1

Default: 0000'h

Table 53. MX-61h: Power Management Control 1

Name	Bits	Read/Write	Reset State	Description
En_i2s1	15	R/W	0'h	I2S1 Digital Interface Power Control 0'b: Power Down 1'b: Power On
En_i2s2	14	R/W	0'h	I2S2 Digital Interface Power Control 0'b: Power Down 1'b: Power On
reserved	13	R/W	0'h	Reserved
Pow_dac_l	12	R/W	0'h	Analog DACL & Digital Filter DAC1_L Power Control 0'b: Power Down 1'b: Power On
Pow_dac_r	11	R/W	0'h	Analog DACR & Digital Filter DAC1_R Power Control 0'b: Power Down 1'b: Power On
reserved	10:8	R	0'h	Reserved
Pow_dac2_l	7	R/W	0'h	Digital Filter DAC2_L Power Control 0'b: Power Down 1'b: Power On

Name	Bits	Read/Write	Reset State	Description
Pow_dac2_r	6	R/W	0'h	Digital Filter DAC2_R Power Control 0'b: Power Down 1'b: Power On
reserved	5:3	R	0'h	Reserved
Pow_adc_l	2	R/W	0'h	Analog ADCL Power Control 0'b: Power Down 1'b: Power On
Pow_adc_r	1	R/W	0'h	Analog ADCR Power Control 0'b: Power Down 1'b: Power On
Pow_clsd	0	R/W	0'h	Class-D Amp Power Control 0'b: Power Down 1'b: Power On

8.38. MX-62h: Power Management Control 2

Default: 0000'h

Table 54. MX-62h: Power Management Control 2

Name	Bits	Read/Write	Reset State	Description
Pow_adc_stereo_filter	15	R/W	0'h	Stereo ADC Digital Filter Power Control 0'b: Power Down 1'b: Power On
Pow_adc_monol_filter	14	R/W	0'h	Mono ADC_L Digital Filter Power Control 0'b: Power Down 1'b: Power On
Pow_adc_monor_filter	13	R/W	0'h	Mono ADC_R Digital Filter Power Control 0'b: Power Down 1'b: Power On
reserved	12:0	R	0'h	Reserved

8.39. MX-63h: Power Management Control 3

Default: 00C0'h

Table 55. MX-63h: Power Management Control 3

Name	Bits	Read/Write	Reset State	Description
Pow_vref1	15	R/W	0'h	VREF1 Power Control 0'b: Power Down 1'b: Power On
En_fastb1	14	R/W	0'h	VREF1 Fast Mode Control 0'b: Fast VREF 1'b: Slow VREF, (For good analog performance)
Pow_main_bias	13	R/W	0'h	MBIAS Power Control 0'b: Power Down 1'b: Power On

Name	Bits	Read/Write	Reset State	Description
Pow_lout	12	R/W	0'h	LOUTMIX Power Control 0'b: Power Down 1'b: Power On
Pow_bg_bias	11	R/W	0'h	MBIAS Bandgap Power Control 0'b: Power Down 1'b: Power On
reserved	10:8	R	0'h	Reserved
En_l_hp	7	R/W	1'h	Left Headphone Amp Power Control 0'b: Power Down 1'b: Power On
En_r_hp	6	R/W	1'h	Right Headphone Amp Power Control 0'b: Power Down 1'b: Power On
En_amp_hp	5	R/W	0'h	Improve HP Amp Driving 0'b: Disable 1'b: Enable
Pow_vref2	4	R/W	0'h	VREF2 Power Control 0'b: Power Down 1'b: Power On
En_fastb2	3	R/W	0'h	VREF2 Fast Mode Control 0'b: Fast VREF 1'b: Slow VREF, (For good analog performance)
Pow_ldo2	2	R/W	0'h	LDO2 Power Control 0'b: Power Down 1'b: Power On
reserved	1:0	R	0'h	Reserved

8.40. MX-64h: Power Management Control 4

Default: 0000'h

Table 56. MX-64h: Power Management Control 4

Name	Bits	Read/Write	Reset State	Description
Pow_bst1	15	R/W	0'h	MIC BST1 Power Control 0'b: Power Down 1'b: Power On
Pow_bst3	14	R/W	0'h	MIC BST3 Power Control 0'b: Power Down 1'b: Power On
reserved	13	R	0'h	Reserved
Pow_bst2	12	R/W	0'h	MIC BST2 Power Control 0'b: Power Down 1'b: Power On
Pow_micbias1	11	R/W	0'h	MICBIAS1 Power Control 0'b: Power Down 1'b: Power On
reserved	10	R/W	0'h	reserved

Name	Bits	Read/Write	Reset State	Description
Pow_pll	9	R/W	0'h	PLL Power Control 0'b: Power Down 1'b: Power On
reserved	8:0	R	0'h	Reserved

8.41. MX-65h: Power Management Control 5

Default: 0000'h

Table 57. MX-65h: Power Management Control 5

Name	Bits	Read/Write	Reset State	Description
Pow_outmixl	15	R/W	0'h	OUTMIXL Power Control 0'b: Power Down 1'b: Power On
Pow_outmixr	14	R/W	0'h	OUTMIXR Power Control 0'b: Power Down 1'b: Power On
Pow_spkmixl	13	R/W	0'h	SPKMIXL Power Control 0'b: Power Down 1'b: Power On
Pow_spkmixr	12	R/W	0'h	SPKMIXR Power Control 0'b: Power Down 1'b: Power On
Pow_recmixl	11	R/W	0'h	RECMIXL Power Control 0'b: Power Down 1'b: Power On
Pow_recmixr	10	R/W	0'h	RECMIXR Power Control 0'b: Power Down 1'b: Power On
reserved	9:0	R	0'h	Reserved

8.42. MX-66h: Power Management Control 6

Default: 0000'h

Table 58. MX-66h: Power Management Control 6

Name	Bits	Read/Write	Reset State	Description
Pow_spkvoll	15	R/W	0'h	SPKVOLL Power Control 0'b: Power Down 1'b: Power On
Pow_spkvolr	14	R/W	0'h	SPKVOLR power Control 0'b: Power Down 1'b: Power On
Pow_outvoll	13	R/W	0'h	OUTVOLL Power Control 0'b: Power Down 1'b: Power On

Name	Bits	Read/Write	Reset State	Description
Pow_outvolr	12	R/W	0'h	OUTVOLR Power Control 0'b: Power Down 1'b: Power On
Pow_hpovoll	11	R/W	0'h	HPOVOLL Power Control 0'b: Power Down 1'b: Power On
Pow_hpovolr	10	R/W	0'h	HPOVOLR Power Control 0'b: Power Down 1'b: Power On
Pow_inlvol	9	R/W	0'h	INLVOL Power Control 0'b: Power Down 1'b: Power On
Pow_inrvol	8	R/W	0'h	INRVOL Power Control 0'b: Power Down 1'b: Power On
reserved	7:0	R	0'h	Reserved

8.43. MX-6Ah: Private Register Index

Default: 0000'h

Table 59. MX-6Ah: Private Register Index

Name	Bits	Read/Write	Reset State	Description
reserved	15:8	R	0'h	reserved
Pr_index	7:0	R/W	0'h	PR Register Index

8.44. MX-6Ch: Private Register Data

Default: 0000'h

Table 60. MX-6Ch: Private Register Data

Name	Bits	Read/Write	Reset State	Description
Pr_data	15:0	R/W	0'h	PR Register Data

8.45. MX-70h: I2S1 Digital Interface Control

Default: 8000'h

Table 61. MX-70h: I2S1 Digital Interface Control

Name	Bits	Read/Write	Reset State	Description
Sel_i2s1_ms	15	R/W	0'h	I2S1 Digital Interface Mode Control 0'b: Master Mode 1'b: Slave Mode
Sel_i2s1_in	14:12	R/W	0'h	I2S Digital Interface Input Port Selection Control 000'b: I2S1 <= BCLK1/LRCK1/DACDAT1/ADCDAT1 I2S2 <= BCLK2/LRCK2/DACDAT2/ADCDAT2 101'b: I2S1 <= BCLK2/LRCK2/DACDAT2/ADCDAT2 I2S2 <= BCLK1/LRCK1/DACDAT1/ADCDAT1 110'b: I2S1 <= BCLK1/LRCK1/DACDAT1/ADCDAT1 I2S2 <= BCLK1/LRCK1/DACDAT1/ADCDAT1 111'b: I2S1 <= BCLK2/LRCK2/DACDAT2/ADCDAT2 I2S2 <= BCLK2/LRCK2/DACDAT2/ADCDAT2 Others: Reserved
en_i2s1_out_comp	11:10	R/W	0'h	I2S1 Output Data Compress (For ADCDAT1 Output) 00'b: OFF 01'b: μ law 10'b: A law 11'b: Reserved
en_i2s1_in_comp	9:8	R/W	0'h	I2S1 Input Data Compress (For DACDAT1 Input) 00'b: OFF 01'b: μ law 10'b: A law 11'b: Reserved
Inv_i2s1_bclk	7	R/W	0'h	I2S1 BCLK Polarity Control 0'b: Normal 1'b: Invert
reserved	6:4	R	0'h	Reserved
sel_i2s1_len	3:2	R/W	0'h	I2S1 Data Length Selection 00'b: 16 bits 01'b: 20 bits 10'b: 24 bits 11'b: 8 bits
sel_i2s1_format	1:0	R/W	0'h	I2S1 PCM Data Format Selection 00'b: I^2S format 01'b: Left justified 10'b: PCM Mode A (LRCK One Plus at Master Mode) 11'b: PCM Mode B (LRCK One Plus at Master Mode)

8.46. MX-71h: I2S2 Digital Interface Control

Default: 8000'h

Table 62. MX-71h: I2S2 Digital Interface Control

Name	Bits	Read/Write	Reset State	Description
Sel_i2s2_ms	15	R/W	0'h	I2S2 Digital Interface Mode Control 0'b: Master Mode 1'b: Slave Mode
reserved	14:12	R	0'h	Reserved
en_i2s2_out_comp	11:10	R/W	0'h	I2S2 Output Data Compress (For ADCDAT2 Output) 00'b: OFF 01'b: μ law 10'b: A law 11'b: Reserved
en_i2s2_in_comp	9:8	R/W	0'h	I2S2 Input Data Compress (For DACDAT2 Input) 00'b: OFF 01'b: μ law 10'b: A law 11'b: Reserved
inv_i2s2_bclk	7	R/W	0'h	I2S2 BCLK Polarity Control 0'b: Normal 1'b: Invert
sel_sdi	6	R/W	0'h	When MX-70[14:12]=6'h or 7'h, Select ADCDAT1/2 Output Source MX-70[14:12]=0x6'h: 0'b: ADCDAT1 is From IF1_ADC 1'b: ADCDAT1 is From IF2_ADC MX-70[14:12]=0x7'h: 0'b: ADCDAT2 is From IF1_ADC 1'b: ADCDAT2 is From IF2_ADC
reserved	5:4	R	0'h	Reserved
sel_i2s2_len	3:2	R/W	0'h	I2S2 Data Length Selection 00'b: 16 bits 01'b: 20 bits 10'b: 24 bits 11'b: 8bits
sel_i2s2_format	1:0	R/W	0'h	I2S2 PCM Data Format Selection 00'b: I^2S format 01'b: Left justified 10'b: PCM Mode A (LRCK One Plus at Master Mode) 11'b: PCM Mode B (LRCK One Plus at Master Mode)

8.47. MX-73h: ADC/DAC Clock Control

Default: 1114'h

Table 63. MX-73h: ADC/DAC Clock Control

Name	Bits	Read/Write	Reset State	Description
sel_i2s_bclk_ms1	15	R/W	0'h	I2S1 Master Mode Clock Relative of BCLK and LRCK 0'b: 16Bits (32FS) 1'b: 32Bits (64FS)
sel_i2s_pre_div1	14:12	R/W	1'h	I2S Clock Pre-Divider 1 000'b: ÷ 1 001'b: ÷ 2 010'b: ÷ 3 011'b: ÷ 4 100'b: ÷ 6 101'b: ÷ 8 110'b: ÷ 12 111'b: ÷ 16
sel_i2s_bclk_ms2	11	R/W	0'h	I2S2 Master Mode Clock Relative of BCLK and LRCK 0'b: 16Bits (32FS) 1'b: 32Bits (64FS)
sel_i2s_pre_div2	10:8	R/W	1'h	I2S Pre-Divider 2 000'b: ÷ 1 001'b: ÷ 2 010'b: ÷ 3 011'b: ÷ 4 100'b: ÷ 6 101'b: ÷ 8 110'b: ÷ 12 111'b: ÷ 16
reserved	7:4	R/W	1'h	Reserved
sel_dac_osr	3:2	R/W	1'h	Stereo DAC Over Sample Rate Select 00'b: 128Fs 01'b: 64Fs 10'b: 32Fs 11'b: 16Fs
sel_adc_osr	1:0	R/W	0'h	Stereo ADC Over Sample Rate Select 00'b: 128Fs 01'b: 64Fs 10'b: 32Fs 11'b: 16Fs

8.48. MX-75h: Digital Microphone Control

Default: 1D00'h

Table 64. MX-75h: Digital Microphone Control

Name	Bits	Read/Write	Reset State	Description
en_dmic1	15	R/W	0'h	Enable DMIC1 Interface 0'b: Disable 1'b: Enable (Output DMIC clock)
en_dmic2	14	R/W	0'h	Enable DMIC2 Interface 0'b: Disable 1'b: Enable (Output DMIC clock)
sel_dmic1_l_edge	13	R/W	0'h	DMIC1 Left Channel Source Control 0'b: Latch from falling edge 1'b: Latch from rising edge
sel_dmic1_r_edge	12	R/W	1'h	DMIC1 Right Channel Source Control 0'b: Latch from falling edge 1'b: Latch from rising edge
reserved	11:10	R/W	3'h	Reserved
sel_dmic2_l_edge	9	R/W	0'h	DMIC2 Left Channel Source Control 0'b: Latch from falling edge 1'b: Latch from rising edge
sel_dmic2_r_edge	8	R/W	1'h	DMIC2 Right Channel Source Control 0'b: Latch from falling edge 1'b: Latch from rising edge
sel_dmic_clk	7:5	R/W	0'h	DMIC Clock Rate Control 000'b: 256*fs/2 001'b: 256*fs/3 010'b: 256*fs/4 011'b: 256*fs/6 100'b: 256*fs/8 101'b: 256*fs/12
reserved	4:0	R	0'h	Reserved

8.49. MX-80h: Global Clock Control

Default: 0000'h

Table 65. MX-80h: Global Clock Control

Name	Bits	Read/Write	Reset State	Description
sel_sysclk1	15:14	R/W	0'h	System Clock Source MUX Control 00'b: MCLK 01'b: PLL 10'b: Reserved 11'b: Reserved

Name	Bits	Read/Write	Reset State	Description
sel_pll_sour	13:12	R/W	0'h	PLL Source Selection 00'b: From MCLK 01'b: From BCLK1 10'b: From BCLK2 11'b: Reserved
reserved	11:4	R	0'h	Reserved
sel_pll_pre_div	3	R/W	0'h	PLL Pre-Divider 0'b: ÷ 1 1'b: ÷ 2
reserved	2:0	R	0'h	Reserved

8.50. MX-81h: PLL Control 1

Default: 0000'h

Table 66. MX-81h: PLL Control 1

Name	Bits	Read/Write	Reset State	Description
Pll_n_code	15:7	R/W	0'h	PLL N[8:0] Code 000000000'b: Div 2 000000001'b: Div 3 … 111111111'b: Div 513
Reserved	6:5	R	0'h	Reserved
Pll_k_code	4:0	R/W	0'h	PLL K[4:0] Code 00000'b: Div 2 00001'b: Div 3 … 11111'b: Div 33

8.51. MX-82h: PLL Control 2

Default: 0000'h

Table 67. MX-82h: PLL Control 2

Name	Bits	Read/Write	Reset State	Description
Pll_m_code	15:12	R/W	0'h	PLL M[3:0] Code 0000'b: Div 2 0001'b: Div 3 … 1111'b: Div 17
Pll_m_bypass	11	R/W	0'h	Bypass PLL M Code 0'b : No bypass 1'b : Bypass
Reserved	10:0	R	0'h	Reserved

8.52. MX-83h: ASRC Control 1

Default: 0000'h

Table 68. MX-83h: ASRC Control 1

Name	Bits	Read/Write	Reset State	Description
sel_stereo_asrc	15	R/W	0'h	Mode Select Control for Stereo Filter 0'b : Normal Mode 1'b : ASRC1 Mode
sel_mono_asrc	14	R/W	0'h	Select Control for Mono Filter 0'b : Clk_i2s2_filter 1'b : (Clk_i2s2_filter) / 3
reserved	13	R/W	0'h	Reserved
sel_i2s2_filter	12	R/W	0'h	Select Control for Clk_i2s2_filter 0'b : Normal Mode 1'b : ASRC2 Mode
reserved	11:10	R/W	0'h	Reserved
sel_dmic1_mode	9	R/W	0'h	Select Control for ASRC Mode in DMIC1 Function 0'b : Normal Mode 1'b : ASRC Mode
sel_dmic2_mode	8	R/W	0'h	Select Control for ASRC Mode in DMIC2 Function 0'b : Normal Mode 1'b : ASRC Mode
reserved	7:0	R	0'h	Reserved

8.53. MX-84h: ASRC Control 2

Default: 0000'h

Table 69. MX-84h: ASRC Control 2

Name	Bits	Read/Write	Reset State	Description
sel_mono_da_l_mode	15	R/W	0'h	Select Control for DA_L Mono Filter 0'b: Normal Mode 1'b: ASRC Mode
sel_mono_da_r_mode	14	R/W	0'h	Select Control for DA_R Mono Filter 0'b: Normal Mode 1'b: ASRC Mode
sel_mono_ad_l_mode	13	R/W	0'h	Select Control for AD_L Mono Filter 0'b: Normal Mode 1'b: ASRC Mode
sel_mono_ad_r_mode	12	R/W	0'h	Select Control for AD_R Mono Filter 0'b: Normal Mode 1'b: ASRC Mode
sel_adc_mode	11	R/W	0'h	Select Control for ADC Stereo Filter 0'b: Normal Mode 1'b: ASRC Mode
reserved	10:6	R/W	0'h	Reserved

Name	Bits	Read/Write	Reset State	Description
sel_stereo_dac_mode	5	R/W	0'h	Select Control for DAC Stereo Filter 0'b : Normal Mode 1'b : ASRC Mode
En_i2s1_asrcin_auto_det	4	R/W	0'h	Automatically Detect I2S1 Input Sample Rate 0'b : Disable 1'b : Enable
En_i2s2_asrcin_auto_det	3	R/W	0'h	Automatically Detect I2S2 Input Sample Rate 0'b : Disable 1'b : Enable
reserved	2	R/W	0'h	Reserved
Sel_asrcin_256fs_sys	1:0	R/W	0'h	Select for Pre-System Clock 00'b: 512*48k 01'b: 1024*48k 10'b: 2048*48k 11'b: Reserved

8.54. MX-85h: ASRC Control 3

Default: 0008'h

Table 70. MX-85h: ASRC Control 3

Name	Bits	Read/Write	Reset State	Description
I2s1_asrcin_fsi_rate_manual	15:12	R/W	0'h	Set I2S1 Input Sample Rate 0'h: 48K 1'h: 96k 2'h: 192k 3'h: 32K 4'h: 48K 5'h: 96k 6'h: 192k 7'h: 32K 8'h: 48K 9'h: 96k A'h: 192k B'h: reserve C'h: 22.05K D'h: reserve E'h: 11.025K F'h: reserve
I2s2_asrcin_fsi_rate_manual	11:8	R/W	0'h	Set I2S2 Input Sample Rate 0'h: 48K 1'h: 96k 2'h: 192k 3'h: 32K 4'h: 48K 5'h: 96k 6'h: 192k 7'h: 32K 8'h: 48K 9'h: 96k A'h: 192k B'h: reserve C'h: 22.05K D'h: reserve E'h: 11.025K F'h: reserve
reserved	7:0	R/W	0'h	Reserved

8.55. MX-89h: ASRC Control 4

Default: 0000'h

Table 71. MX-89h: ASRC Control 4

Name	Bits	Read/Write	Reset State	Description
reserved	15	R	0'h	Reserved
i2s1_track_prediv	14:12	R/W	0'h	Set I2S1 Clock Division for Stereo Filter 000'b: div1 001'b: div2 010'b: div3 011'b: div4 100'b: div6 101'b: div8 110'b: div12 111'b: div16
reserved	11	R	0'h	Reserved

Name	Bits	Read/Write	Reset State	Description
i2s2_track_prediv	10:8	R/W	0'h	Set I2S2 Clock Division for Mono Filter 000'b: div1 001'b: div2 010'b: div3 011'b: div4 100'b: div6 101'b: div8 110'b: div12 111'b: div16
reserved	7:0	R/W	0'h	Reserved

8.56. MX-8Ah: ASRC Control 5

Default: 0000'h

Table 72. MX-8Ah: ASRC Control 5

Name	Bits	Read/Write	Reset State	Description
asrcin_fsi1_rate	15:12	R	0'h	I2S1 Sample Rate Detection 0000'b: 48k, 44.1k, 32k 0001'b: 96k, 88.2k 0010'b: 192k, 176.4k 0100'b: 24k, 22.05k, 16k 0110'b: 12k, 11.025k, 8k
asrcin_fsi2_rate	11:8	R	0'h	I2S2 Sample Rate Detection 0000'b: 48k, 44.1k, 32k 0001'b: 96k, 88.2k 0010'b: 192k, 176.4k 0100'b: 24k, 22.05k, 16k 0110'b: 12k, 11.025k, 8k
reserved	7:0	R	0'h	Reserved

8.57. MX-8Ch: Class-D Amp OC Control

Default: 0228'h

Table 73. MX-8Ch: Class-D Amp OC Control

Name	Bits	Read/Write	Reset State	Description
reserved	15:10	R	0'h	Reserved
Pow_ocp_clsd	9	R/W	1'h	Class-D Amp Over-Current Sensor Power Control 0'b: Power Down 1'b: Power On
Autopd_clsd	8	R/W	0'h	Class-D Amp Auto Power Down Control When OC 0'b: Disable 1'b: Enable
reserved	7:6	R	0'h	Reserved
Spk_ovc_th_clsd	5:0	R/W	28'h	Class-D Amp over-current threshold control [5]*2.4A + [4]*2.4A + [3]*1.2A + [2]*0.6A + [1]*0.3A + [0]*0.15A

8.58. MX-8Dh: Class-D Amp Output Control

Default: A800'h

Table 74. MX-8Dh: Class-D Amp Output Control

Name	Bits	Read/Write	Reset State	Description
fbgain_clsd	15:12	R/W	A'h	Class-D Amp AC+DC Ratio Gain Control 1010'b: 3.30 × 1001'b: 3.00 × 1000'b: 2.77× 0111'b: 2.66× 0110'b: 2.55× 0101'b: 2.44× 0100'b: 2.33× 0011'b: 2.22× 0010'b: 2.11× 0001'b: 2.00× 0000'b: 1.94×
reserved	11:0	R/W	800'h	Reserved

8.59. MX-8Eh: HP Amp Control 1

Default: 0004'h

Table 75. MX-8Eh: HP Amp Control 1

Name	Bits	Read/Write	Reset State	Description
Smttrig_hp	15	R/W	0'h	Enable Softgen Trigger for Soft Mute Depop 0'b: Disable 1'b: Enable
reserved	14:10	R/W	0'h	Reserved
En_smt_l_hp	9	R/W	0'h	Enable HP_L Mute/Un-Mute Depop 0'b: Disbale 1'b: Enable
En_smt_r_hp	8	R/W	0'h	Enable HP_R Mute/Un-Mute Depop 0'b: Disbale 1'b: Enable
Pdn_hp	7	R/W	0'h	Capless Depop Power Down Control 0'b: Disbale 1'b: Enable
Softgen_rstn	6	R/W	0'h	Reset Softgen to Initialize SOFTP=1 0'b: Disbale 1'b: Reset
Softgen_rstp	5	R/W	0'h	Reset Softgen to Initialize SOFTP=0 0'b: Disbale 1'b: Reset
En_out_hp	4	R/W	0'h	Enable Headphone Output 0'b: Disable 1'b: Enable

Name	Bits	Read/Write	Reset State	Description
Pow_pump_hp	3	R/W	0'h	Charge Pump Power Control 0'b: Power Down 1'b: Power On
En_softgen_hp	2	R/W	1'h	Power On Soft Generator 0'b: Power down 1'b: Power on
reserved	1	R/W	0'h	Reserved
Pow_capless	0	R/W	0'h	HP Amp All Power On Control 0'b: Power Down 1'b: Power On

8.60. MX-91h: HP Amp Control 2

Default: 0C00'h

Table 76. MX-91h: HP Amp Control 2

Name	Bits	Read/Write	Reset State	Description
reserved	15:10	R/W	3'h	Reserved
Sel_pm_hp	9:8	R/W	0'h	HP Charge Pump Mode Selection 00'b: Low voltage mode 01'b: Middle voltage mode 10'b: High voltage mode 11'b: Reserved
reserved	7:0	R/W	0'h	Reserved

8.61. MX-92h: SPKVDD Detection Control

Default: 0000'h

Table 77. MX-92h: SPKVDD Detection Control

Name	Bits	Read/Write	Reset State	Description
en_spk_auto_ratio	15	R/W	0'h	Enable SPKVDD Detection 0'b: Disable 1'b: Enable
en_spk_auto_gain	14	R/W	0'h	Enable Speaker Amp Auto Ratio Gain Control ❶ (Digital will mapping ratio gain table by SPKVDD detection) 0'b: Disable 1'b: Enable
reserved	13:0	R	0'h	Reserved

❶ AC Ratio Gain would be:

Ratio Gain Table (ACVDD with SPKVDD)				
ACVDD	**SPKVDD**	**Voltage Detected Code**	**AC+DC Ratio Gain**	**FBGAIN[3:0]**
1.8V	<3.0V	0000	1.94	0000
	3.0V ~ 3.3V	0001	1.94	0000
	3.3V ~ 3.5V	0010	2	0001
	3.5V ~ 3.6V	0011	2.11	0010
	3.6V ~ 3.8V	0100	2.22	0011
	3.8V ~ 4.0V	0101	2.33	0100
	4.0V ~ 4.2V	0110	2.44	0101
	4.2V ~ 4.4V	0111	2.55	0110
	4.4V ~ 4.6V	1000	2.66	0111
	4.6V ~ 4.8V	1001	2.77	1000
	4.8V ~ 5V	1010	3.00	1001
	>5V	1011	3.30	1010

8.62. MX-93h: MICBIAS Control

Default: 3000'h

Table 78. MX-93h: MICBIAS Control

Name	Bits	Read/Write	Reset State	Description
Sel_micbias1	15	R/W	0'h	MICBIAS1 Output Voltage Control 0'b: 0.9 * MICVDD 1'b: 0.75 * MICVDD
reserved	14:12	R/W	3'h	Reserved
Pow_mic1_ovcd	11	R/W	0'h	MICBIAS1 Short Current Detector Control 0'b: Disable 1'b: Enable

Name	Bits	Read/Write	Reset State	Description
Mic1_ovcd_th_sel	10:9	R/W	0'h	MICBIAS1 Short Current Detector Threshold 00'b: 600uA 01'b: 1500uA 1x'b: 2000uA Note: tolerance is 200uA
reserved	8:0	R/W	0'h	reserved

8.63. MX-B0h: EQ Control 1

Default: 2000'h

Table 79. MX-B0h: EQ Control 1

Name	Bits	Read/Write	Reset State	Description
eq_sour	15	R/W	0'h	EQ Path Control 0'b: DAC path 1'b: ADC path
eq_para_update	14	R/W	0'h	EQ Parameter Update Control 0'b: No action 1'b: Update parameter
reserved	13:7	R/W	40'h	Reserved
sta_hpf2	6	R	0'h	EQ High Pass Filter (HPF2) Status. 0'b: Normal 1'b: Overflow. This bit is set if overflow had ever occurred. Write 1 to clear it.
sta_hpf1	5	R	0'h	EQ High Pass Filter (HPF1) Status. 0'b: Normal 1'b: Overflow. This bit is set if overflow had ever occurred. Write 1 to clear it.
sta_bpf4	4	R	0'h	EQ Band-4 (BP4) Status. 0'b: Normal 1'b: Overflow. This bit is set if overflow had ever occurred. Write 1 to clear it.
sta_bpf3	3	R	0'h	EQ Band-3 (BP3) Status. 0'b: Normal 1'b: Overflow. This bit is set if overflow had ever occurred. Write 1 to clear it.
sta_bpf2	2	R	0'h	EQ Band-2 (BP2) Status. 0'b: Normal 1'b: Overflow. This bit is set if overflow had ever occurred. Write 1 to clear it.

Name	Bits	Read/Write	Reset State	Description
sta_bpf1	1	R	0'h	EQ Band-1 (BP1) Status. 0'b: Normal 1'b: Overflow. This bit is set if overflow had ever occurred. Write 1 to clear it.
sta_lpf	0	R	0'h	EQ Low Pass Filter (LPF) Status. 0'b: Normal 1'b: Overflow. This bit is set if overflow had ever occurred. Write 1 to clear it.

8.64. MX-B1h: EQ Control 2

Default: 0000'h

Table 80. MX-B1h: EQ Control 2

Name	Bits	Read/Write	Reset State	Description
reserved	15:9	R	0'h	Reserved
reg_typ_hpf_en	8	R/W	0'h	EQ High Pass Filter1 Mode Control 0'b: High frequency shelving filter 1'b: 1st order Butterworth HPF (-20dB per decade)
reg_typ_lpf_en	7	R/W	0'h	EQ Low Pass Filter Mode Control 0'b: Low frequency shelving filter 1'b: 1st order Butterworth LPF (-20dB per decade)
en_hpf2	6	R/W	0'h	EQ High Pass 2nd Butterworth Filter (HPF) Control. 0'b: Disabled (bypass) and reset 1'b: Enabled
en_hpf1	5	R/W	0'h	EQ High Pass Filter (HPF) Control. 0'b: Disabled (bypass) and reset 1'b: Enabled
en_bpf4	4	R/W	0'h	EQ Band-4 (BP4) shelving Filter Control. 0'b: Disabled and reset 1'b: Enabled.
en_bpf3	3	R/W	0'h	EQ Band-3 (BP3) shelving Filter Control. 0'b: Disabled and reset 1'b: Enabled.
en_bpf2	2	R/W	0'h	EQ Band-2 (BP2) shelving Filter Control. 0'b: Disabled and reset 1'b: Enabled.
en_bpf1	1	R/W	0'h	EQ Band-1 (BP1) shelving Filter Control. 0'b: Disabled and reset 1'b: Enabled.
en_lpf	0	R/W	0'h	EQ Low Pass Filter (LPF) Filter Control. 0'b: Disabled and reset 1'b: Enabled.

8.65. MX-B4h: DRC/AGC Control 1

Default: 2206'h

Table 81. MX-B4h: DRC/AGC Control 1

Name	Bits	Read/Write	Reset State	Description
sel_drc_agc	15:14	R/W	0'h	DRC/AGC Enable 00'b: Disable DRC/AGC 01'b: Enable DRC to DAC Path 10'b: Disable DRC/AGC 11'b: Enable AGC to ADC Path
update_drc_agc_param	13	R	1'h	Update DRC/AGC Parameter Write 1'b to update all DRC/AGC parameter
sel_drc_agc_atk	12:8	R/W	2'h	Select DRC/AGC attack rate (0.375dB/TU)❶ 00'h: 83 uSec 01'h: 0.167 mSec … 10'h: 5.46 Sec Others: Reserved
Drc_agc_rate_sel	7:5	R/W	0'h	DRC/AGC Rate Control for Sample Rate Change❸ 001'b: 48kHz 010'b: 96kHz 011'b: 192kHz 101'b: 44.1kHz 110'b: 88.2kHz 111'b: 176.4kHz Others: Reserved
sel_rc_rate	4:0	R/W	6'h	Select DRC/AGC recovery rate (0.375dB/TU)❷ 00'h: 83 uSec 01'h: 0.167 mSec … 10'h: 5.46 Sec Others: Reserved

❶ attack time=(4*2^n)/Sample_Rate, n = MX-B4[12:8], default=0.33mS
❷ recovery time=(4*2^n)/Sample_Rate, n = MX-B4[4:0], default=5.3mS
❸ When change I2S's sample rate, the DRC/AGC rate control is need to be changed same with I2S's sample rate. When change the DRC/AGC rate, the parameter of DRC/AGC isn't need be modified.
When I2S's sample rate is below 48kHz, that need to set the DRC/AGC rate to 48kHz and re-calculate the DRC/AGC's parameter by I2S's sample rate.

8.66. MX-B5h: DRC/AGC Control 2

Default: 1F00'h

Table 82. MX-B5h: DRC/AGC Control 2

Name	Bits	Read/Write	Reset State	Description
reserved	15:14	R	0'h	Reserved
sel_drc_agc_post_bst	13:8	R/W	1f'h	DRC/AGC Digital Post-Boost Gain (0.375dB/step)❶ 00'h= -11.625dB …….. 3F'h= 12dB Others: Reserved
En_drc_agc_compres s	7	R/W	0'h	DRC/AGC Compression Function Control 0'b: Disable 1'b: Enable
Sel_ratio	6:5	R/W	0'h	DRC/AGC Compression Ratio Selection 00'b: 1:1 01'b: 1:2 10'b: 1:3 11'b: 1:4
sel_drc/agc_pre_bst	4:0	R/W	0'h	DRC/AGC Digital Pre-Boost Gain (1.5dB/step)❷ 00'h= 0dB 01'h= 1.5dB 02'h= 3dB 03'h= 4.5dB …….. 13'h= 28.5dBFS Others: Reserved

❶Gain table:

DEC	HEX	Boost Gain	DEC	HEX	Boost Gain	DEC	HEX	Boost Gain	DEC	HEX	Boost Gain	DEC	HEX	Boost Gain
0	0	-11.625	16	10	-5.625	32	20	0.375	48	30	6.375	64	40	
1	1	-11.25	17	11	-5.25	33	21	0.75	49	31	6.75	65	41	
2	2	-10.875	18	12	-4.875	34	22	1.125	50	32	7.125	66	42	
3	3	-10.5	19	13	-4.5	35	23	1.5	51	33	7.5	67	43	
4	4	-10.125	20	14	-4.125	36	24	1.875	52	34	7.875	68	44	
5	5	-9.75	21	15	-3.75	37	25	2.25	53	35	8.25	69	45	
6	6	-9.375	22	16	-3.375	38	26	2.625	54	36	8.625	70	46	

7	7	-9	23	17	-3	39	27	3	55	37	9	71	47	
8	8	-8.625	24	18	-2.625	40	28	3.375	56	38	9.375	72	48	
9	9	-8.25	25	19	-2.25	41	29	3.75	57	39	9.75	73	49	
10	A	-7.875	26	1A	-1.875	42	2A	4.125	58	3A	10.125	74	4A	
11	B	-7.5	27	1B	-1.5	43	2B	4.5	59	3B	10.5	75	4B	
12	C	-7.125	28	1C	-1.125	44	2C	4.875	60	3C	10.875	76	4C	
13	D	-6.75	29	1D	-0.75	45	2D	5.25	61	3D	11.25			
14	E	-6.375	30	1E	-0.375	46	2E	5.625	62	3E	11.625			
15	F	-6	31	1F	0	47	2F	6	63	3F	12			

❷

DEC	HEX	Boost Gain	DEC	HEX	Boost Gain
0	0	0	16	10	24
1	1	1.5	17	11	25.5
2	2	3	18	12	27
3	3	4.5	19	13	28.5
4	4	6	20	14	
5	5	7.5	21	15	
6	6	9	22	16	
7	7	10.5	23	17	
8	8	12	24	18	
9	9	13.5	25	19	
10	A	15	26	1A	
11	B	16.5	27	1B	
12	C	18	28	1C	
13	D	19.5	29	1D	
14	E	21	30	1E	
15	F	22.5	31	1F	

8.67. MX-B6h: DRC/AGC Control 3

Default: 0000'h

Table 83. MX-B6h: DRC/AGC Control 3

Name	Bits	Read/Write	Reset State	Description
Noise_gate_boost	15:12	R/W	0'h	Select Compensation Gain When Signal is Below Noise Gate 0'h: 0dB 1'h: 3dB 2'h: 6dB … E'h: 42dB F'h: 45dB
sel_drc_agc_thmax	11:7	R/W	0'h	DRC/AGC Limiter Level (1.5dB/step) 00'h= 0dBFS 01'h= -1.5dBFS 02'h= -3dBFS 03'h= -4.5dBFS … 1F'h= -46.5dBFS
en_drc_agc_noise_gate	6	R/W	0'h	Enable Noise Gate function 0'b: Diaable 1'b: Enable
En_drc_agc_noise_gate_hold	5	R/W	0'h	Enable Noise Gate Hold Data Function 0'b: Disable 1'b: Enable
sel_drc_agc_noise_th	4:0	R/W	0'h	Noise Gate Threshold (-1.5dB/step) 00'h: -36dBFS 01'h: -375dBFS …….. 1F'h: -82.5 dBFS

8.68. MX-BBh: Jack Detection Control

Default: 0000'h

Table 84. MX-BBh: Jack Detection Control

Name	Bits	Read/Write	Reset State	Description
sel_jd_source	15:13	R/W	0'h	Jack Detect Selection 000'b: OFF 001'b: GPIO1 010'b: JD1 and enable IN1N pin share 011'b: JD2 and enable IN2N pin share 100'b: GPIO2 Others: Reserved
reserved	12	R	0'h	Reserved
en_jd_hpo	11	R/W	0'h	Enable Jack Detect Trigger HPOUT 0'b: Disable 1'b: Enable
polarity_jd_tri_hpo	10	R/W	0'h	Select Jack Detect Polarity Trigger HPOUT 0'b: Low trigger 1'b: High trigger
en_jd_spo_l	9	R/W	0'h	Enable Jack Detect Trigger SPK_OUT_LP/LN 0'b: Disable 1'b: Enable
polarity_jd_tri_spo_l	8	R/W	0'h	Select Jack Detect Polarity Trigger SPO_LP/LN 0'b: Low trigger 1'b: High trigger
en_jd_spo_r	7	R/W	0'h	Enable Jack Detect Trigger SPO_RP/RN 0'b: Disable 1'b: Enable
polarity_jd_tri_spo_r	6	R/W	0'h	Select Jack Detect Polarity Trigger SPO_RP/RN 0'b: Low trigger 1'b: High trigger
reserved	5:4	R/W	0'h	reserved
en_jd_lout	3	R/W	0'h	Enable Jack Detect Trigger LOUT 0'b: Disable 1'b: Enable
polarity_jd_tri_lout	2	R/W	0'h	Select Jack Detect Polarity Trigger LOUT 0'b: Low trigger 1'b: High trigger
reserved	1:0	R/W	0'h	reserved

8.69. MX-BDh: IRQ Control 1

Default: 0000'h

Table 85. MX-BDh: IRQ Control 1

Name	Bits	Read/Write	Reset State	Description
en_irq_jd	15	R/W	0'h	IRQ Output Source Configure of Jack Detection Status 0'b: Disable 1'b: Enable
en_irq_ovtd	14	R/W	0'h	IRQ Output Source Configure of Over Temperature Status 0'b: Disable 1'b: Enable
en_jd_sticky	13	R/W	0'h	Sticky Control for Jack Detect 0'b: Disable 1'b: Enable
en_ovt_sticky	12	R/W	0'h	Sticky Control for Over Temperature 0'b: Disable 1'b: Enable
inv_jd	11	R/W	0'h	Jack Detection Status Polarity 0'b: Normal 1'b: Output Invert
inv_ovtd	10	R/W	0'h	Over Temperature Status Polarity 0'b: Normal 1'b: Output Invert
reserved	9:0	R	0'h	Reserved

8.70. MX-BEh: IRQ Control 2

Default: 0000'h

Table 86. MX-BEh: IRQ Control 2

Name	Bits	Read/Write	Reset State	Description
en_irq_micbias1_ovcd	15	R/W	0'h	IRQ Output Source Configure of MICBIAS1 Over Current Status 0'b: Disable 1'b: Enable
reserved	14:12	R/W	0'h	Reserved
en_micbias1_ovcd_sticky	11	R/W	0'h	Sticky Control for MICBIAS1 Over Current 0'b: Disable 1'b: Enable
reserved	10:8	R/W	0'h	Reserved
inv_micbias1_ovcd	7	R/W	0'h	MICBIAS1 over current status polarity 0'b: Normal 1'b: Output Invert
reserved	6:4	R	0'h	Reserved
Ovc_micbias1	3	R	0'h	MICBIAS1 Over Current Status Read: return status of each status pin Write: Write '0' to clear stick bit
Reserved	2:0	R	0'h	Reserved

8.71. MX-BFh: GPIO and Internal Status

Default: 0000'h

Table 87. MX-BFh: GPIO and Internal Status

Name	Bits	Read/Write	Reset State	Description
reserved	15:9	R	0'h	Reserved
sta_gpio1	8	R	0'h	GPIO1 Pin Status Read: return status of each GPIO pin
sta_gpio2	7	R	0'h	GPIO2 Pin Status Read: return status of each GPIO pin
reserved	6:5	R	0'h	reserved
sta_jd_internal	4	R	0'h	JD Status Read: Return status of Jack Detect Select output Write: Write '0' to clear stick bit
ovt_status	3	R	0'h	Over Temperature Status❶ Read: return status of each status pin Write: Write '0' to clear stick bit
reserved	2:1	R	0'h	Reserved
sta_ovcd	0	R	0'h	Speaker amplifier over current status Read: return status of each status pin

❶The over-temperature threshold is around 125degree C.

8.72. MX-C0h: GPIO Control 1

Default: 0400'h

Table 88. MX-C0h: GPIO Control 1

Name	Bits	Read/Write	Reset State	Description
sel_gpio1_type	15	R/W	0'h	GPIO1 Pin Function Select 0'b: GPIO1 1'b: IRQ output
sel_gpio2_type	14	R/W	0'h	GPIO2 Pin Function Select 0'b: GPIO2 1'b: DMIC1_SCL
reserved	13:0	R/W	400'h	Reserved

8.73. MX-C2h: GPIO Control 2

Default: 0000'h

Table 89. MX-C2h: GPIO Control 2

Name	Bits	Read/Write	Reset State	Description
reserved	15:6	R/W	0'h	Reserved
sel_gpio2	5	R/W	0'h	GPIO2 Pin Configuration 0'b: Input 1'b: Output
sel_gpio2_logic	4	R/W	0'h	GPIO2 Output Pin Control 0'b: Drive Low 1'b: Drive High
inv_gpio2	3	R/W	0'h	GPIO2 Pin Polarity 0'b: Normal 1'b: Output Invert
sel_gpio1	2	R/W	0'h	GPIO1 Pin Configuration 0'b: Input 1'b: Output
sel_gpio1_logic	1	R/W	0'h	GPIO1 Output Pin Control 0'b: Drive Low 1'b: Drive High
inv_gpio1	0	R/W	0'h	GPIO1 Pin Polarity 0'b: Normal 1'b: Output Invert

8.74. MX-C8h: Programmable Register Array Control 1

Default: 0000'h

Table 90. MX-C8h: Programmable Register Array Control 1

Name	Bits	Read/Write	Reset State	Description
sequencer	15:12	R/W	0'h	Register Sequencer 0 ~ 16
sta_seq1_ready	11	R	0'h	The Processing Status of Sequence-1 0'b: Sequence-1 is running 1'b: Sequence-1 is finished
sta_seq2_ready	10	R	0'h	The Processing Status of Sequence-2 0'b: Sequence-2 is running 1'b: Sequence-2 is finished
reg_level	9	R/W	0'h	Register Level Selection 0'b: MX register 1'b: PR register
sequence_write	8	R/W	0'h	Write Sequences to Programmable Table Write "1" to execute, then clear to "0"
reg_index	7:0	R/W	00'h	Register Index 00'h ~ FF'h

8.75. MX-C9h: Programmable Register Array Control 2

Default: 0000'h

Table 91. MX-C9h: Programmable Register Array Control 2

Name	Bits	Read/Write	Reset State	Description
Reg_data	15:0	R/W	0'h	Register Data 0000'h ~ FFFF'h

8.76. MX-CAh: Programmable Register Array Control 3

Default: 0000'h

Table 92. MX-CAh: Programmable Register Array Control 3

Name	Bits	Read/Write	Reset State	Description
sequence_delay	15:8	R/W	00'h	Delay Time Between the Sequencer 00'h: No delay time, delay function off 01'h ~ FF'h (100us ~ 100ms)
pro_reg_en	7	R/W	0'h	Control The Programmable Register 0'b: Disable 1'b: Enable
sequence_run_1	6	R	0'h	Run Sequence-1 from Programmable Table Write "1" to execute, then clear to "0" 0'b: Normal 1'b: Write
sequence_run_2	5	R	0'h	Run Sequence-2 from Programmable Table Write "1" to execute, then clear to "0" 0'b: Normal 1'b: Write
reserved	4:0	R	0'h	Reserved

8.77. MX-CBh: Programmable Register Array Control 4

Default: 0000'h

Table 93. MX-CBh: Programmable Register Array Control 4

Name	Bits	Read/Write	Reset State	Description
reserved	15:12	R	0'h	Reserved
sequence_1_start	11:8	R/W	00'h	Start for Sequence-1 00'h ~ 15'h
reserved	7:4	R	0'h	Reserved
sequence_1_end	3:0	R/W	00'h	End for Sequence-1 00'h ~ 15'h

8.78. MX-CCh: Programmable Register Array Control 5

Default: 0000'h

Table 94. MX-CCh: Programmable Register Array Control 5

Name	Bits	Read/Write	Reset State	Description
reserved	15:12	R	0'h	Reserved
sequence_2_start	11:8	R/W	00'h	Start for Sequence-2 00'h ~ 15'h
reserved	7:4	R	0'h	Reserved
sequence_2_end	3:0	R/W	00'h	End for Sequence-2 00'h ~ 15'h

8.79. MX-D3h: Wind Filter Control – Enable/Disable

Default: 2A20'h

Table 95. MX-D3h: Wind Filter Control – Enable/Disable

Name	Bits	Read/Write	Reset State	Description
adj_hpf_2nd_en	15	R/W	0'h	Enable Adjustable 2nd Wind Filter 0'b : Disable (bypass mode) 1'b : Enable
adj_hpf_coef_l_sel	14:12	R/W	2'h	Left Channel Sample Rate Selection 000'b: 12k or 16k 001'b: 24k or 32k 010'b: 48k or 44.1k 011'b: 96k or 88.2k 100'b: 192k or 176.4k
narrow_hpf_en	11	R/W	1'h	Enable 1st Narrow Band Wind Filter 0'b : Disable (bypass mode) 1'b :Enable
adj_hpf_coef_r_sel	10:8	R/W	2'h	Right Channel Sample Rate Selection 000'b: 12k or 16k 001'b: 24k or 32k 010'b: 48k or 44.1k 011'b: 96k or 88.2k 100'b: 192k or 176.4k
reserved	7:0	R/W	20'h	Reserved

8.80. MX-D6h:HP Amp Control

Default: 0400'h

Table 96. MX-D6h: HP Amp Control

Name	Bits	Read/Write	Reset State	Description
reserved	15:6	R/W	10'h	Reserved
Auto_pm_hp	5	R/W	0'h	HP Charge Pump Voltage Auto Mode 0'b: Disable 1'b: Enable
reserved	4:0	R/W	0'h	Reserved

8.81. MX-D9h: Soft Volume & ZCD Control

Default: 0809'h

Table 97. MX-D9h: Soft Volume & ZCD Control

Name	Bits	Read/Write	Reset State	Description
en_softvol	15	R/W	0'h	Digital Soft Volume Delay Control 0'b: Disable 1'b: Enable
en_spo_svol	14	R/W	0'h	SPOVOLL/R Soft Volume Delay Control 0'b: Disable 1'b: Enable
en_o_svol	13	R/W	0'h	OUTVOLL/R Soft Volume Delay Control 0'b: Disable 1'b: Enable
en_hpo_svol	12	R/W	0'h	HPOVOLL/R Soft Volume Delay Control 0'b: Disable 1'b: Enable
en_zcd_digital	11	R/W	1'h	Digital Volume Zero Crossing Detection Control 0'b: Disable 1'b: Enable
pow_zcd	10	R/W	0'h	Power On Zero Crossing 0'b: Power Down 1'b: Power On
En_zcd_recmixl	9	R/W	0'h	RECMIXL Mute/Un-Mute ZCD Control 0'b: Disable 1'b: Enable
En_zcd_recmixr	8	R/W	0'h	RECMIXR Mute/Un-Mute ZCD Control 0'b: Disable 1'b: Enable
En_zcd_spkmixl	7	R/W	0'h	SPKMIXL Mute/Un-Mute ZCD Control 0'b: Disable 1'b: Enable
En_zcd_spkmixr	6	R/W	0'h	SPKMIXR Mute/Un-Mute ZCD Control 0'b: Disable 1'b: Enable

Name	Bits	Read/Write	Reset State	Description
En_zcd_outmixl	5	R/W	0'h	OUTMIXL Mute/Un-Mute ZCD Control 0'b: Disable 1'b: Enable
En_zcd_outmixr	4	R/W	0'h	OUTMIXR Mute/Un-Mute ZCD Control 0'b: Disable 1'b: Enable
sel_svol	3:0	R/W	9'h	Soft Volume Change Delay Time 0000: 1 SVSYNC 0001: 2 SVSYNC 0010: 4 SVSYNC 0011: 8 SVSYNC 0100: 16 SVSYNC 0101: 32 SVSYNC 0110: 64 SVSYNC 0111: 128 SVSYNC 1000: 256 SVSYNC 1001: 512 SVSYNC 1010: 1024 SVSYNC Others: Reserved Note: SVSYNC=1/Fs, Step:-1.5dBFS

8.82. MX-FAh: General Control 1

Default: 3400'h

Table 98. MX-FAh: General Control 1

Name	Bits	Read/Write	Reset State	Description
Reserved	15	R/W	0'h	Reserved
En_lout_df	14	R/W	0'h	Enable Differential Output for LOUT 0'b: Disable 1'b: Enable LOUTL => LOUTL LOUTR => (inv)LOUTR
Mu_mono_adc_vol_l	13	R/W	1'h	Digital Mute Control for Mono Left ADC Filter to I2S 0'b: Un-Mute 1'b: Mute
Mu_mono_adc_vol_r	12	R/W	1'h	Digital Mute Control for Mono Right ADC Filter to I2S 0'b: Un-Mute 1'b: Mute
Mclk_detection	11	R/W	0'h	MCLK Detection Function Control 0'b: Disable 1'b: Enable
Reserved	10	R/W	1'h	Reserved
En_in1_se	9	R/W	0'h	IN1 Single-End Input Control 0'b: Disable 1'b: Enable

Name	Bits	Read/Write	Reset State	Description
En_in2_se	8	R/W	0'h	IN2 Single-End Input Control 0'b: Disable 1'b: Enable
Reserved	7	R/W	0'h	Reserved
Sel_clk_ad_src	6	R/W	0'h	Clock Select for Stereo ADC 0'b: Normal mode 1'b: Asynchronous mode
Sel_clk_ad_src_mono_l	5	R/W	0'h	Clock Select for Left Mono ADC 0'b: Normal mode 1'b: Asynchronous mode
Sel_clk_ad_src_mono_r	4	R/W	0'h	Clock Select for Right Mono ADC 0'b: Normal mode 1'b: Asynchronous mode
reserved	3:1	R/W	0'h	Reserved
Digital_gate_ctrl	0'h	R/W	0'h	I2S Clock Gating Control 0'b: Gating input clock 1'b: Enable input clock

8.83. MX-FBh: General Control 2

Default: 0000'h

Table 99. MX-FBh: General Control 2

Name	Bits	Read/Write	Reset State	Description
Reserved	15:13	R/W	0'h	Reserved
En_irq_jd2	12	R/W	0'h	IRQ Output Source Configuration for JD2 0'b: Disable 1'b: ENable
Sta_jd2_internal	11	R	0'h	JD2 Status Read: Return status of JD2 Write: Write '0' to clean sticky bit
Inv_jd2	10	R/W	0'h	JD2 Status Polarity 0'b: Normal 1'b: Output Invert
En_jd2_sticky	9	R/W	0'h	Sticky Control for JD2 0'b: Disable 1'b: Enable
En_jd2	8	R/W	0'h	Enable JD2 Function for Extra JD Status 0'b: Disable 1'b: Enable
Reserved	7:0	R/W	0'h	Reserved

8.84. PR-3Ah: Digital IO Driving Control

Default: 4002'h

Table 110. PR-3Ah: Digital IO Driving Control

Name	Bits	Read/Write	Reset State	Description
Sel_pad_drive	15:14	R/W	1'h	Digital IO Driving Control 00'b: Setting-1 (Minimum driving) 01'b: Setting-2 10'b: Setting-3 11'b: Setting-4 (Maximum driving)
Reserved	13:0	R/W	2'h	Reserved

8.85. PR-3Dh: ADC/DAC RESET Control

Default: 2400'h

Table 101. PR-3Dh: ADC/DAC RESET Control

Name	Bits	Read/Write	Reset State	Description
Reserved	15:13	R/W	1'h	Reserved
En_ckgen_adc	12	R/W	0'h	Enable ADC Clock Generator 0'b: Disable 1'b: Enable
Reserved	11:10	R/W	1'h	Reserved
En_ckgen_dac	9	R/W	0'h	Enable DAC Clock Generator 0'b: Disable 1'b: Enable
Reserved	8:0	R/W	0'h	Reserved

8.86. PR-6Eh: Wind Filter Fc Control

Default: 3019'h

Table 102. PR-6Eh: Wind Filter Fc Control

Name	Bits	Read/Write	Reset State	Description
reserved	15:12	R/W	3'h	Reserved
sel_hpf_fc	11:6	R/W	0'h	Wind Filter Fc Selection 0:30Hz, 1:40Hz, …, 63:1030Hz
reserved	5:0	R/W	19'h	Reserved

8.87. PR-A0h: EQ Low Pass Filter Coefficient (LPF:a1)

Default: 1C10'h

Table 103. PR-A0h: EQ Low Pass Filter Coefficient (LPF:a1)

Name	Bits	Read/Write	Reset State	Description
lpf_a1	15:0	R/W	1C10'h	2's complement in 3.13 format. (The range is from –4~3.99, the a1 should be in -2 ~ 1.99)

8.88. PR-A1h: EQ Low Pass Filter Gain (LPF:H0)

Default: 01F4'h

Table 104. PR-A1h: EQ Low Pass Filter Gain (LPF:H0)

Name	Bits	Read/Write	Reset State	Description
lpf_h0	15:0	R/W	01F4'h	2's complement in 3.13 format. (The range is from –4~3.99, the H0 should be in -4 ~ 3.99)

8.89. PR-A2h: EQ Band 1 Coefficient (BPF1:a1)

Default: C5E9'h

Table 105. PR-A2h: EQ Band 1 Coefficient (BPF1:a1)

Name	Bits	Read/Write	Reset State	Description
Bpf1_a1	15:0	R/W	C5E9'h	2's complement in 3.13 format. (The range is from –4~3.99, the a1 should be in -2 ~ 1.99)

8.90. PR-A3h: EQ Band 1 Coefficient (BPF1:a2)

Default: 1A98'h

Table 106. PR-A3h: EQ Band 1 Coefficient (BPF1:a2)

Name	Bits	Read/Write	Reset State	Description
Bpf1_a2	15:0	R/W	1A98'h	2's complement in 3.13 format. (The range is from –4~3.99, the a2 should be in -2 ~ 1.99)

8.91. PR-A4h: EQ Band 1 Gain (BPF1:H0)

Default: 1D2C'h

Table 107. PR-A4h: EQ Band 1 Gain (BPF1:H0)

Name	Bits	Read/Write	Reset State	Description
Bpf1_h0	15:0	R/W	1D2C'h	2's complement in 3.13 format. (The range is from –4~3.99, the H0 should be in -4 ~ 3.99)

8.92. PR-A5h: EQ Band 2 Coefficient (BPF2:a1)

Default: C882'h

Table 108. PR-A5h: EQ Band 2 Coefficient (BPF2:a1)

Name	Bits	Read/Write	Reset State	Description
Bpf2_a1	15:0	R/W	C882'h	2's complement in 3.13 format. (The range is from –4~3.99, the a1 should be in -2 ~ 1.99)

8.93. PR-A6h: EQ Band 2 Coefficient (BPF2:a2)

Default: 1C10'h

Table 109. PR-A6h: EQ Band 2 Coefficient (BPF2:a2)

Name	Bits	Read/Write	Reset State	Description
Bpf2_a2	15:0	R/W	1C10'h	2's complement in 3.13 format. (The range is from –4~3.99, the a2 should be in -2 ~ 1.99)

8.94. PR-A7h: EQ Band 2 Gain (BPF2:H0)

Default: 01F4'h

Table 110. PR-A7h: EQ Band 2 Gain (BPF2:H0)

Name	Bits	Read/Write	Reset State	Description
Bpf2_h0	15:0	R/W	01F4'h	2's complement in 3.13 format. (The range is from –4~3.99, the H0 should be in -4 ~ 3.99)

8.95. PR-A8h: EQ Band 3 Coefficient (BPF3:a1)

Default: E904'h

Table 111. PR-A8h: EQ Band 3 Coefficient (BPF3:a1)

Name	Bits	Read/Write	Reset State	Description
Bpf3_a1	15:0	R/W	E904'h	2's complement in 3.13 format. (The range is from –4~3.99, the a1 should be in -2 ~ 1.99)

8.96. PR-A9h: EQ Band 3 Coefficient (BPF3:a2)

Default: 1C10'h

Table 112. PR-A9h: EQ Band 3 Coefficient (BPF3:a2)

Name	Bits	Read/Write	Reset State	Description
Bpf3_a2	15:0	R/W	1C10'h	2's complement in 3.13 format. (The range is from –4~3.99, the a2 should be in -2 ~ 1.99)

8.97. PR-AAh: EQ Band 3 Gain (BPF3:H0)

Default: 01F4'h

Table 113. PR-AAh: EQ Band 3 Gain (BPF3:H0)

Name	Bits	Read/Write	Reset State	Description
Bpf3_h0	15:0	R/W	01F4'h	2's complement in 3.13 format. (The range is from –4~3.99, the H0 should be in -4 ~ 3.99)

8.98. PR-ABh: EQ Band 4 Coefficient (BPF4:a1)

Default: E904'h

Table 114. PR-ABh: EQ Band 4 Coefficient (BPF4:a1)

Name	Bits	Read/Write	Reset State	Description
Bpf4_a1	15:0	R/W	E904'h	2's complement in 3.13 format. (The range is from –4~3.99, the a1 should be in -2 ~ 1.99)

8.99. PR-ACh: EQ Band 4 Coefficient (BPF4:a2)

Default: 1C10'h

Table 115. PR-ACh: EQ Band 4 Coefficient (BPF4:a2)

Name	Bits	Read/Write	Reset State	Description
Bpf4_a2	15:0	R/W	1C10'h	2's complement in 3.13 format. (The range is from –4~3.99, the a2 should be in -2 ~ 1.99)

8.100. PR-ADh: EQ Band 4 Gain (BPF4:H0)

Default: 01F4'h

Table 116. PR-ADh: EQ Band 4 Gain (BPF4:H0)

Name	Bits	Read/Write	Reset State	Description
Bpf4_h0	15:0	R/W	01F4'h	2's complement in 3.13 format. (The range is from –4~3.99, the H0 should be in -4 ~ 3.99)

8.101. PR-AEh: EQ High Pass Filter 1 Coefficient (HPF1:a1)

Default: 1C10'h

Table 117. PR-AEh: EQ High Pass Filter 1 Coefficient (HPF1:a1)

Name	Bits	Read/Write	Reset State	Description
Hpf1_a1	15:0	R/W	1C10'h	2's complement in 3.13 format. (The range is from –4~3.99, the a1 should be in -2 ~ 1.99)

8.102. PR-AFh: EQ High Pass Filter 1 Gain (HPF1:H0)

Default: 01F4'h

Table 118. PR-AFh: EQ High Pass Filter 1 Gain (HPF1:H0)

Name	Bits	Read/Write	Reset State	Description
Hpf1_h0	15:0	R/W	01F4'h	2's complement in 3.13 format. (The range is from –4~3.99, the H0 should be in -4 ~ 3.99)

8.103. PR-B0h: EQ High Pass Filter 2 Coefficient (HPF2:a1)

Default: 2000'h

Table 119. PR-B0h: EQ High Pass Filter 2 Coefficient (HPF2:a1)

Name	Bits	Read/Write	Reset State	Description
Hpf2_a1	15:0	R/W	2000'h	2's complement in 3.13 format. (The range is from –4~3.99, the a1 should be in -2 ~ 1.99)

8.104. PR-B1h: EQ High Pass Filter 2 Coefficient (HPF2:a2)

Default: 0000'h

Table 120. PR-B1h: EQ High Pass Filter 2 Coefficient (HPF2:a2)

Name	Bits	Read/Write	Reset State	Description
Hpf2_a2	15:0	R/W	0000'h	2's complement in 3.13 format. (The range is from –4~3.99, the a2 should be in -2 ~ 1.99)

8.105. PR-B2h: EQ High Pass Filter 2 Gain (HPF2:H0)

Default: 2000'h

Table 121. PR-B2h: EQ High Pass Filter 2 Gain (HPF2:H0)

Name	Bits	Read/Write	Reset State	Description
Hpf2_h0	15:0	R/W	2000'h	2's complement in 3.13 format. (The range is from –4~3.99, the H0 should be in -4 ~ 3.99)

8.106. PR-B3h: EQ Pre-Volume Control

Default: 0800'h

Table 122. PR-B3h: EQ Pre-Volume Control

Name	Bits	Read/Write	Reset State	Description
Eq_pre_vol	15:0	R/W	0800'h	2's complement in 5.113 format. (Default is 0dB) The range is from –16~15.99, the gain should be in +24dB ~ -66dB)

8.107. PR-B4h: EQ Post Volume Control

Default: 0800'h

Table 123. PR-B4h: EQ Post Volume Control

Name	Bits	Read/Write	Reset State	Description
Eq_post_vol	15:0	R/W	0800'h	2's complement in 5.113 format. (Default is 0dB) The range is from –16~15.99, the gain should be in +24dB ~ -66dB)

8.108. MX-FEh: Vendor ID

Default: 10EC'h

Table 124. MX-FEh: Vendor ID

Name	Bits	Read/Write	Reset State	Description
Vendor_id	15:0	R	10EC'h	Vendor ID

9. Electrical Characteristics

9.1. DC Characteristics

9.1.1. Absolute Maximum Ratings

Table 125. Absolute Maximum Ratings

Parameter	Symbol	Min	Typ	Max	Units
Power Supplies					
Digital IO Buffer	DBVDD	-0.3	-	3.63	V
Digital Core	DCVDD	-0.3	-	1.98	V
Analog	AVDD	-0.3	-	1.98	V
Analog	DACREF	-0.3	-	1.98	V
Headphone	CPVDD	-0.3	-	1.98	V
Micbias	MICVDD	-0.3	-	3.63	V
Speaker	SPKVDD	-0.3	-	7[1]	V
Operating Ambient Temperature	Ta	-25	-	+85	°C
Storage Temperature	Ts	-55	-	+125	°C

Note 1: SPKVDD=5V with 3.5% duty cycle Power bouncing up to SPKVDD=8V is acceptable.

9.1.2. Recommended Operating Conditions

Table 126. Recommended Operating Conditions

Parameter	Symbol	Min	Typ	Max	Units
Digital IO Buffer	DBVDD	1.71	1.8	3.6	V
Digital Core	DCVDD	1.1	1.2	1.9	V
Analog	AVDD	1.71	1.8	1.9	V
Analog	DACREF	1.71	1.8	1.9	V
Headphone	CPVDD	1.71	1.8	1.9	V
Micbias	MICVDD	3.0	3.3	3.6	V
Speaker	SPKVDD[1]	3.0	3.6/5.0	5.5	V

Note 1: A 10µF Capacitor must be connected from SPKVDD to SPKGND, and should be placed as close as possible to the SPKVDD pin.

9.1.3. Static Characteristics

Table 127. Static Characteristics

Parameter	Symbol	Min	Typ	Max	Units
Input Voltage Range	V_{IN}	-0.30	-	DBVDD+0.30	V
Low Level Input Voltage	V_{IL}	-	-	0.35DBVDD	V
High Level Input Voltage	V_{IH}	0.65DBVDD	-	-	V
High Level Output Voltage	V_{OH}	0.9DBVDD	-	-	V
Low Level Output Voltage	V_{OL}	-	-	0.1DBVDD	V
Output Buffer High Drive Current	-	0.6	1.8	4.3	mA
Output Buffer Low Drive Current	-	0.7	2.1	4.8	mA
Input Buffer Pull-Up Resistor	-	55	110	270	KΩ
Input Buffer Pull-Down Resistor	-	63	130	300	KΩ

Note: DBVDD=1.8V, DCVDD=1.2V, $T_{ambient}$=40°C.

9.2. Analog Performance Characteristics

Table 128. Analog Performance Characteristics

Parameter	Min	Typ	Max	Units
Full Scale Input Voltage				
Line Inputs (Single-ended)	-	0.6	-	Vrms
MIC Inputs (Single-ended)	-	0.6	-	Vrms
MIC Inputs (Differential)	-	1.2	-	Vrms
Full Scale Output Voltage				
Line Outputs (Single-ended)	-	1.0	-	Vrms
Line Outputs (Differential)	-	1.0	-	Vrms
Headphone Amplifiers Outputs (For 10KOhm Load)	-	1.0	-	Vrms
Headphone Amplifiers Outputs (For 16Ohm Load)		0.7		Vrms
Headphone Amplifiers Outputs (For 32Ohm Load)		0.9		Vrms
Speaker Amplifiers Outputs (SPKVDD=5.0V with 4Ω Load, 1% THD+N)		2.9		Vrms
S/N Ratio				
Stereo DAC Direct to HP_L/R with 16/32/10KOhm	-	100	102	dBA
Stereo DAC Direct to SPK_OUT with 8Ohm/5V (Differential)	-	95		dBA
Line_In to Stereo ADC with 0dB (Single-end)		94	95	dBA
MIC_In to Stereo ADC with 0dB (Differential or Single-end)		94	95	dBA
MIC_In to Stereo ADC with 20dB and MICBIAS (Differential or Single-end)		89		dBA
MIC_In to Stereo ADC with 40dB and MICBIAS (Differential or Single-end)		78		dBA
MIC_In to Stereo ADC with 50dB and MICBIAS (Differential or Single-end)		68		dBA
Total Harmonic Distortion + Noise				
DAC Direct to HP_L/R				
Po = 20mW/CH (16Ohm)		-80		dB
Po = 20mW/CH (32Ohm)		-80		dB
DAC Direct to HP_L/R with 10KOhm -3dBFS		-86		dB
DAC Direct to SPK_OUT (Differential)				
Po=1.2W (5V/8Ohm)		<1		%
Po=2.1W (5V/4Ohm)		<1		%
Po=920mW (4.2V/8Ohm)		<1		%
Po=650mW (3.6V/8Ohm)		<1		%
Line_In to Stereo ADC with 0dB (Single-end)		-83		dB
MIC_In to Stereo ADC with 0dB (Differential or Single-end)		-83		dB
MIC_In to Stereo ADC with 20dB and MICBIAS (Differential or Single-end)		-81		dB
MIC_In to Stereo ADC with 40dB and MICBIAS (Differential or		-74		dB

Parameter	Min	Typ	Max	Units
Single-end)				
MIC_In to Stereo ADC with 50dB and MICBIAS (Differential or Single-end)		-65		dB
BTL Speaker Amplifier Efficiency				
(f_{IN}=1kHz, 8Ω Load, SPKVDD=5.0V, Output Power=2.5W, with LC filter, L=33uH and C=1uF)				
Class-D (Stereo Mode)	-	88	-	%
Power Consumption (Slave I2S Mode, 24-bit, SR: 44.1KHz)				
P_all power down		<100		uW
P_playback (Stereo DAC to HP_OUT with 16 Ohm Load, With Clock, play silence)		<= 5		mW
P_playback (Stereo DAC to HP_OUT with 16 Ohm Load, With Clock, Po=1mW/CH)		<= 13		mW
P_playback (Stereo DAC to SPK_OUT with 8 Ohm Load, With Clock, play silence)		< 25		mW
P_record (LINE_IN to Stereo ADC, With Clock)		< 9		mW
Power Down Current				
I_{DDA} (Analog Block)	-	-	10	µA
I_{DDD} (Digital Block)	-	-	20	µA
MICBIAS1 Output Voltage				
Setting 1	-	0.9*MICVDD	-	V
Setting 2	-	0.75*MICVDD	-	V
MICBIAS1 Drive Current				
MICBIAS = 0.9*LDO2_O	-	4	-	mA

Note: Standard test conditions:
$T_{ambient}$=25°C
DBVDD=1.8V
DCVDD=1.2V
AVDD=1.8V
MICVDD=3.3V
CPVDD=1.8V
SPKVDD=5.0V or 4.2V or 3.6V.
1kHz input sine wave; PCM Sampling frequency=48kHz; Test bench Characterization BW: 10Hz~22kHz, 0dB attenuation

9.3. Signal Timing

9.3.1. I²C Control Interface

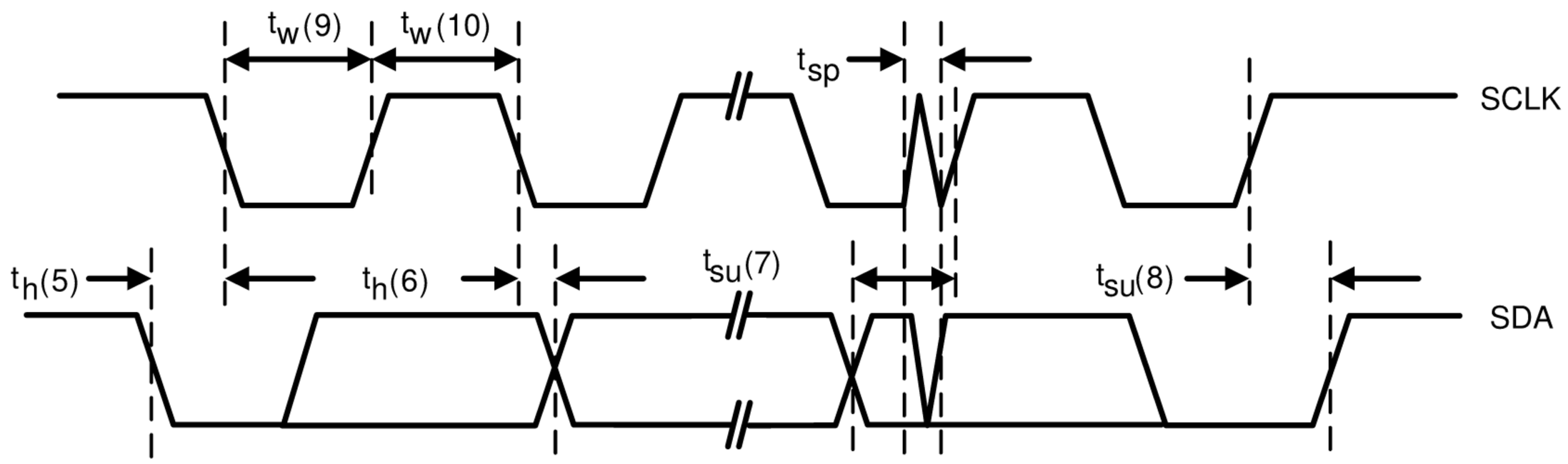

Figure 27. I²C Control Interface

Table 129. I²C Timing

For FAST-MODE:

Parameter	Symbol	Min	Typ	Max	Units
Clock Pulse Duration	$t_w(9)$	1.3	-	-	µs
Clock Pulse Duration	$t_w(10)$	600	-	-	ns
Clock Frequency	F	0	-	400K	Hz
Start Hold Time	$t_h(5)$	600	-	-	ns
Data Setup Time	$t_{su}(7)$	100	-	-	ns
Data Hold Time	$t_h(6)$	-	-	900	ns
Rising Time	t_r	-	-	300	ns
Falling Time	t_f	-	-	300	ns
Stop Setup Time	$t_{su}(8)$	600	-	-	ns
Pulse Width of Spikes Suppressed Input Filter	t_{sp}	0	-	50	ns

For STANDARD-MODE:

Parameter	Symbol	Min	Typ	Max	Units
Clock Pulse Duration	$t_w(9)$	4.7	-	-	µs
Clock Pulse Duration	$t_w(10)$	4.0	-	-	µs
Clock Frequency	F	0	-	100K	Hz
Start Hold Time	$t_h(5)$	4.0	-	-	µs
Data Setup Time	$t_{su}(7)$	250	-	-	ns
Data Hold Time	$t_h(6)$	-	-	3.45	µs
Rising Time	t_r	-	-	1000	ns
Falling Time	t_f	-	-	300	ns
Stop Setup Time	$t_{su}(8)$	4.0	-	-	µs
Pulse Width of Spikes Suppressed Input Filter	t_{sp}	0	-	50	ns

9.3.2. I²S/PCM Interface Master Mode

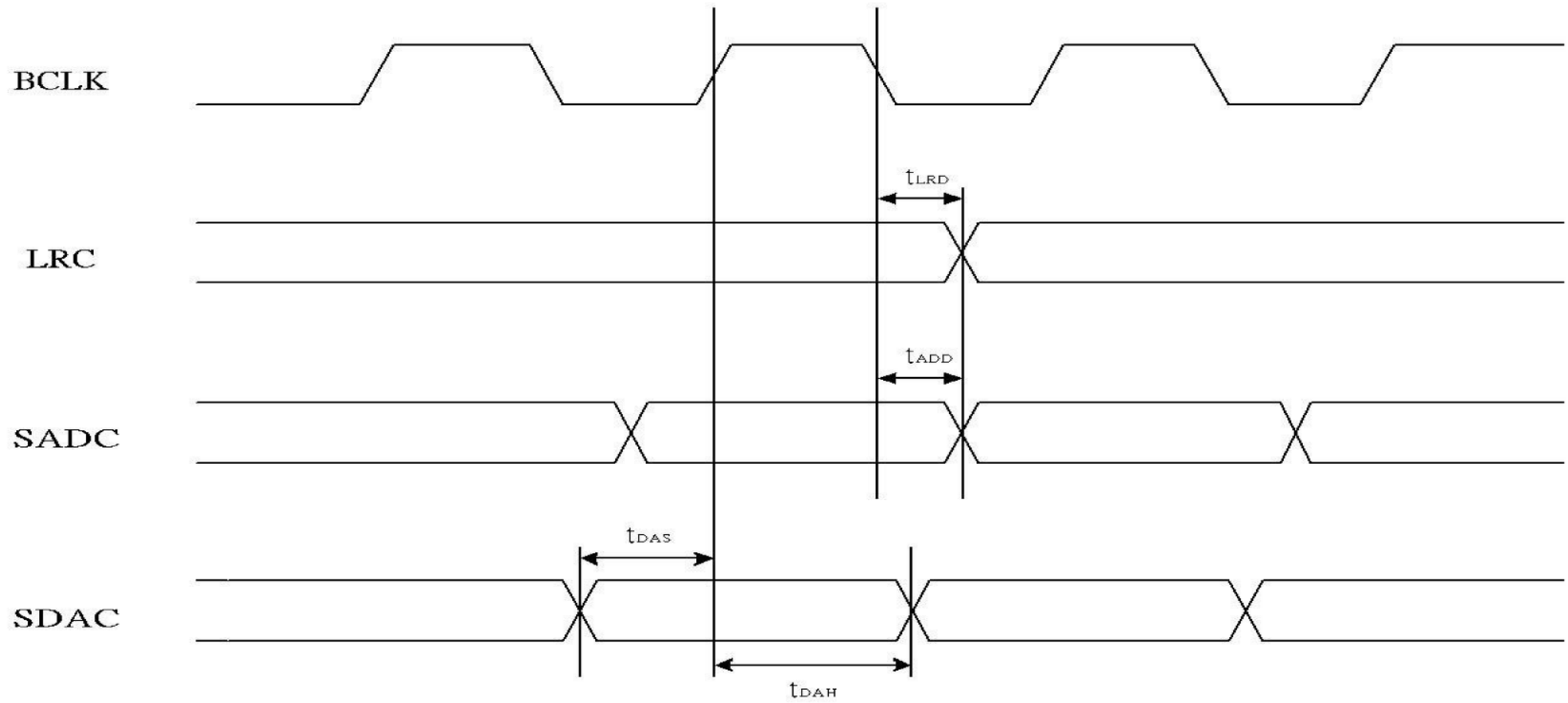

Figure 28. Timing of I²S/PCM Master Mode

Table 130. Timing of I²S/PCM Master Mode

Parameter	Symbol	Min	Typ	Max	Units
LRCK Output to BCLK Delay	t_{LRD}	-	-	30	ns
Data Output to BCLK Delay	t_{ADD}	-	-	30	ns
Data Input Setup Time	t_{DAS}	10	-	-	ns
Data Input Hold Time	t_{DAH}	10	-	-	ns

9.3.3. I²S/PCM Interface Slave Mode

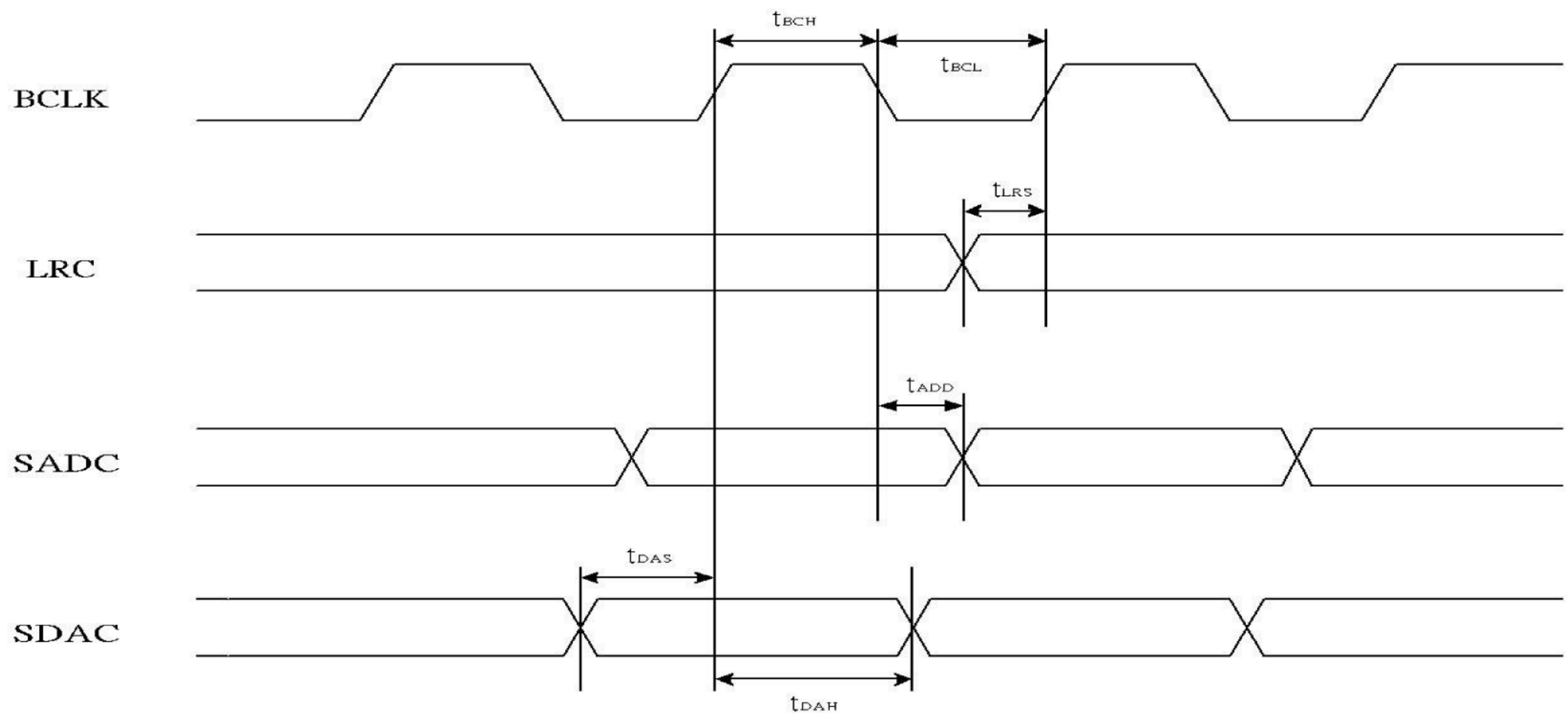

Figure 29. I²S/PCM Slave Mode Timing

Table 131. I²S/PCM Slave Mode Timing

Parameter	Symbol	Min	Typ	Max	Units
BCLK High Pulse Width	t_{BCH}	20	-	-	ns
BCLK Low Pulse Width	t_{BCL}	20	-	-	ns
LRCK Input Setup Time	t_{LRS}	30	-	-	ns
Data Output to BCLK Delay	t_{ADD}	-	-	30	ns
Data Input Setup Time	t_{DAS}	10	-	-	ns
Data Input Hold Time	t_{DAH}	10	-	-	ns

9.3.4. Digital Microphone Interface

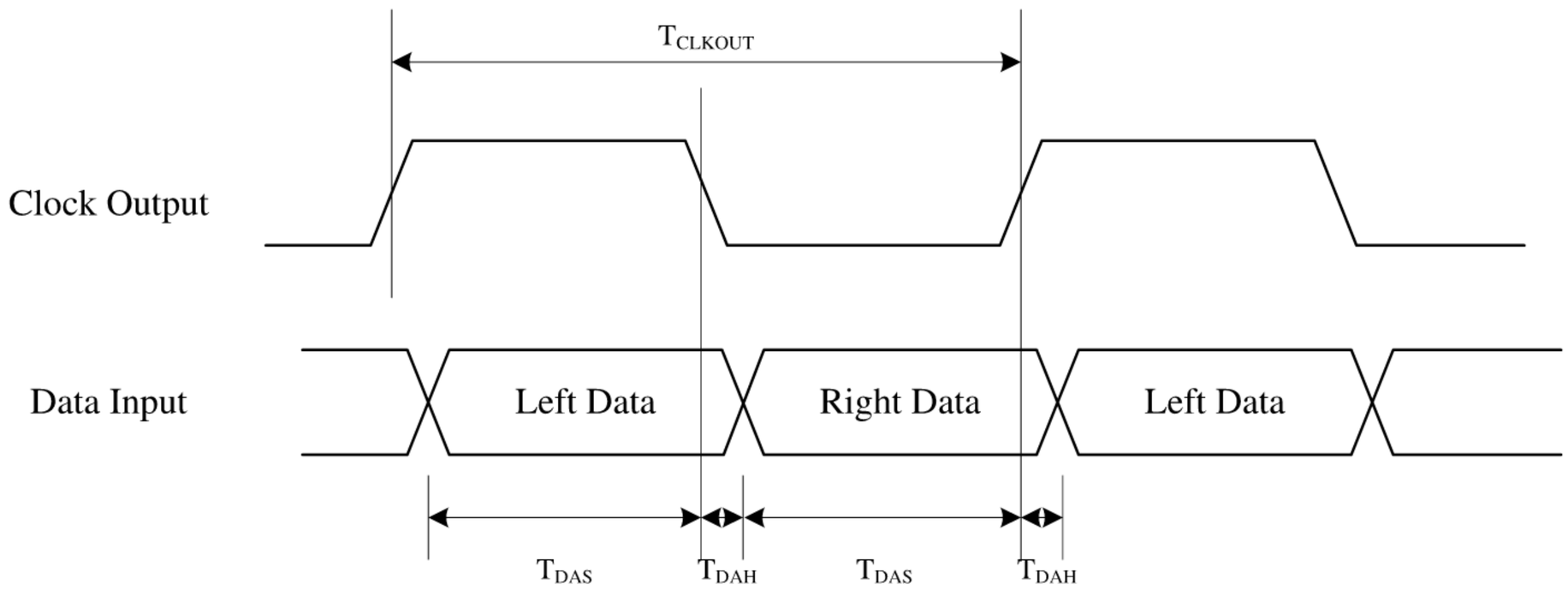

Figure 29. Digital Microphone Interface Timing

Table 132. Digital Microphone Interface Timing

Parameter	Symbol	Min	Typ	Max	Units
Clock Output Rate	T_{CLKOUT}	300	-	-	ns
Clock Duty Cycle		45:55		55:45	
Data Input Setup Time	T_{DAS}	20	-	-	ns
Data Input Hold Time	T_{DAH}	10	-	-	ns

10. Application Circuits

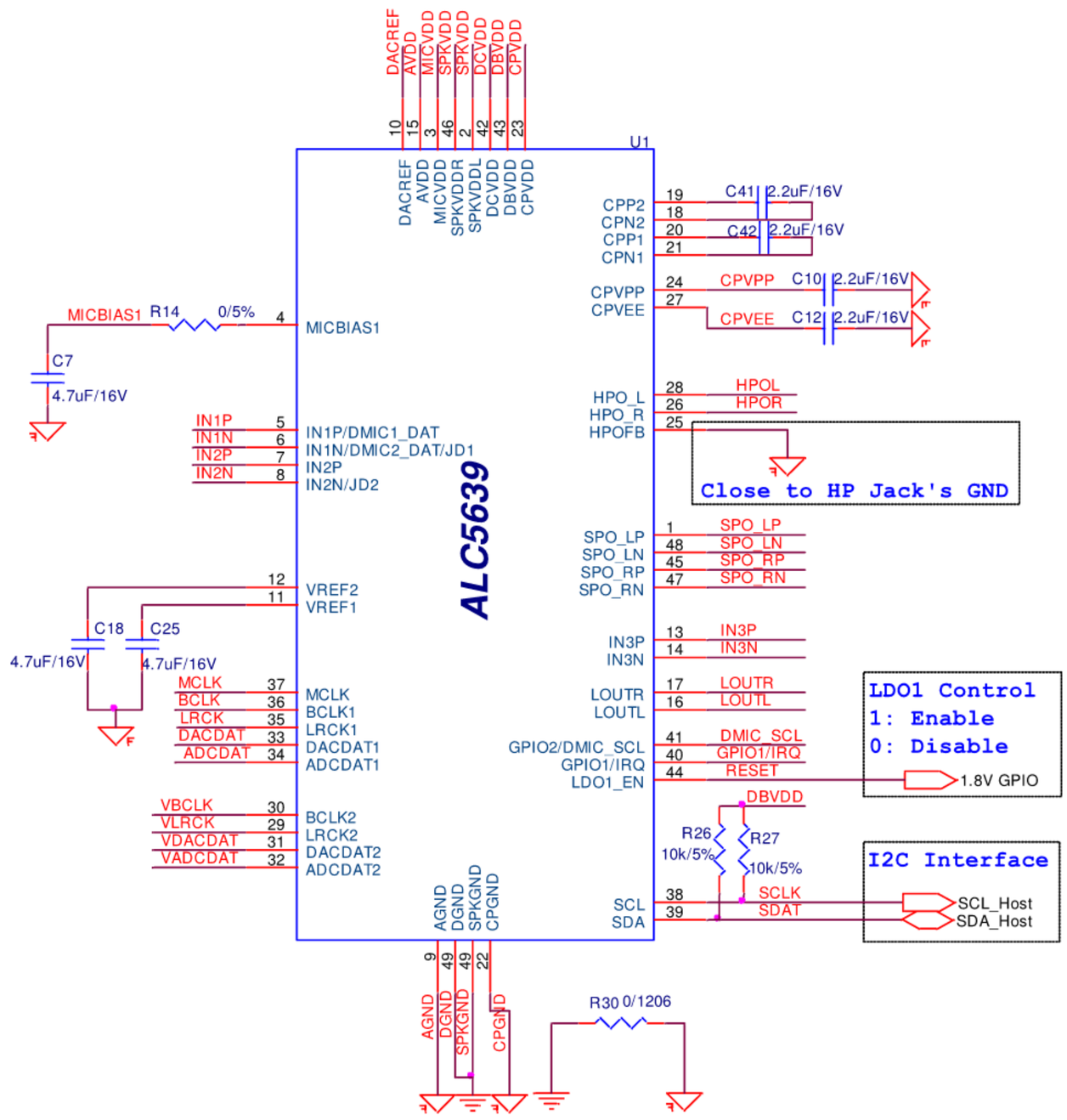

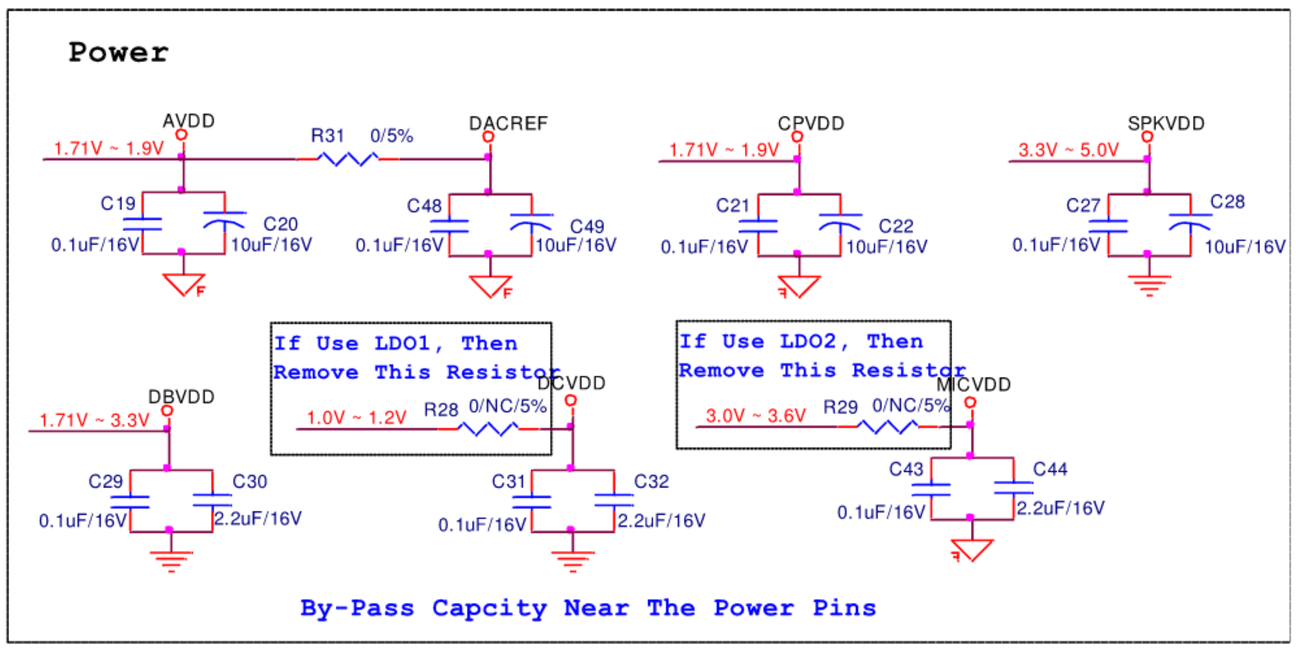

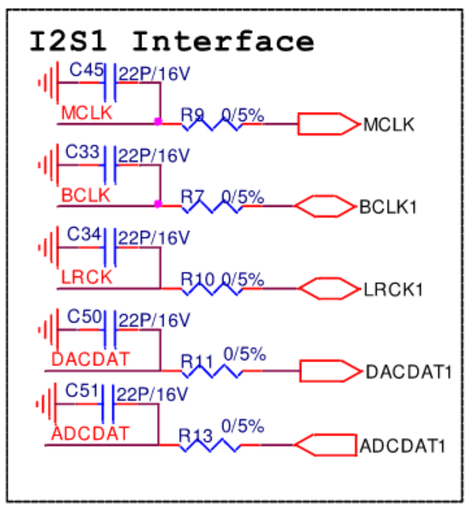

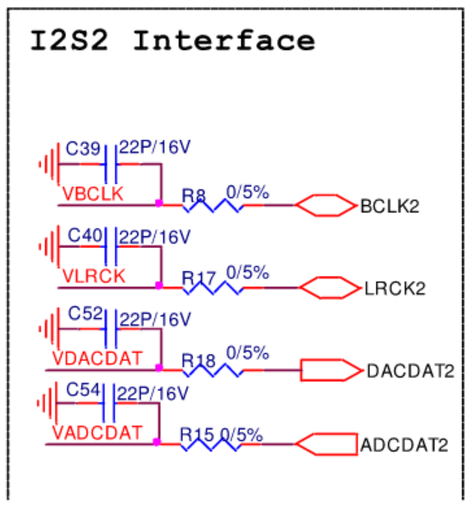

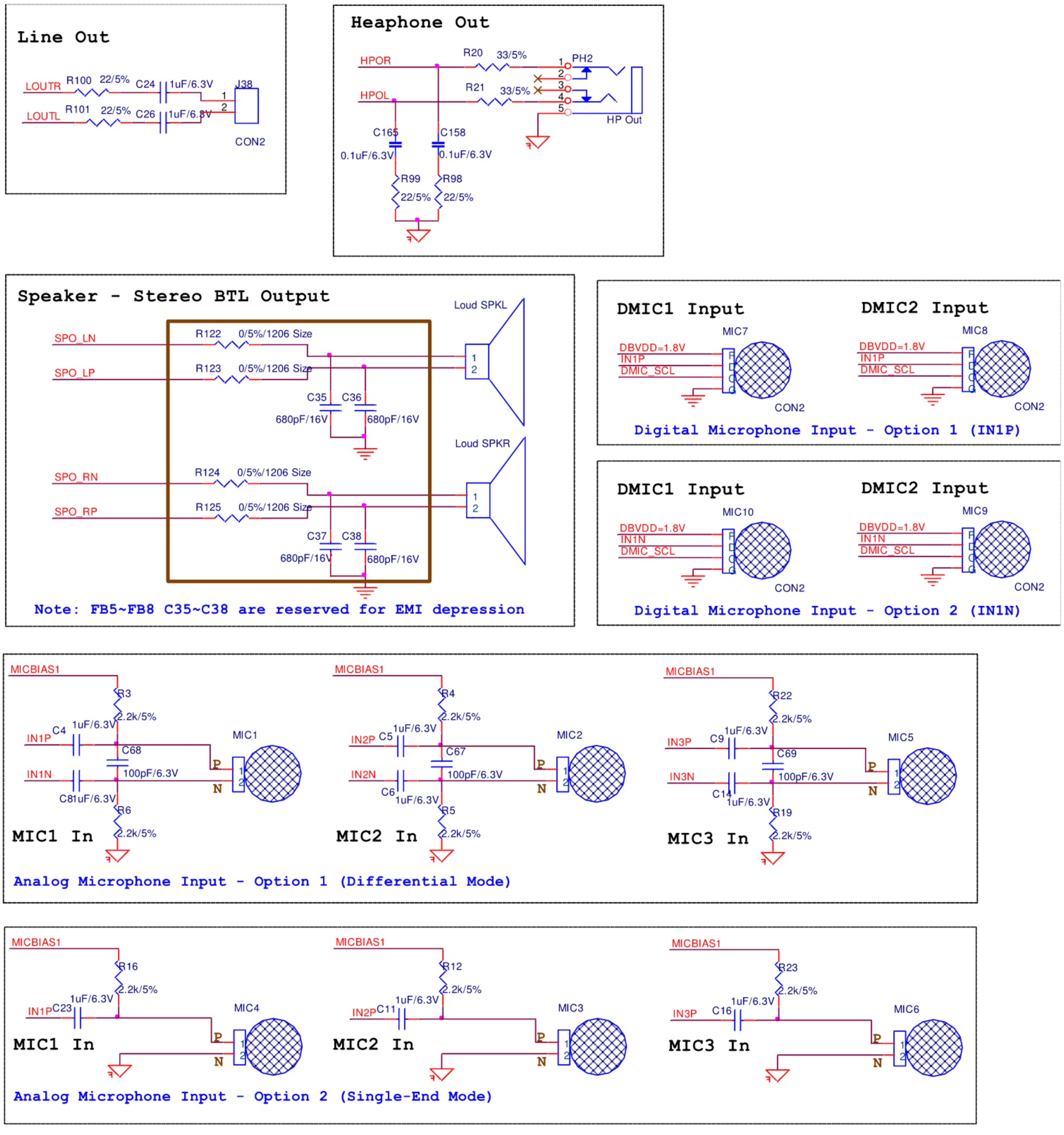

Figure 30. Application Circuit

11. Package Thermal Data

Table 133. Package Thermal Data

PKG.			Condition			4L			2L		
Type	pin count	body size	Max Tj	Ambient temperature	Power dissipation(W)	Theta ja (C/W)	Theta jc (C/W)	Theta jb (C/W)	Theta ja (C/W)	Theta jc (C/W)	Theta jb (C/W)
sawQFN	48	6X6	125	55	1	28.3	12.3	5.5	38.9	13.9	7.37

12. Mechanical Dimensions

Plastic Quad Flat No-Lead Package 48 Leads 6x6mm^2 Outline

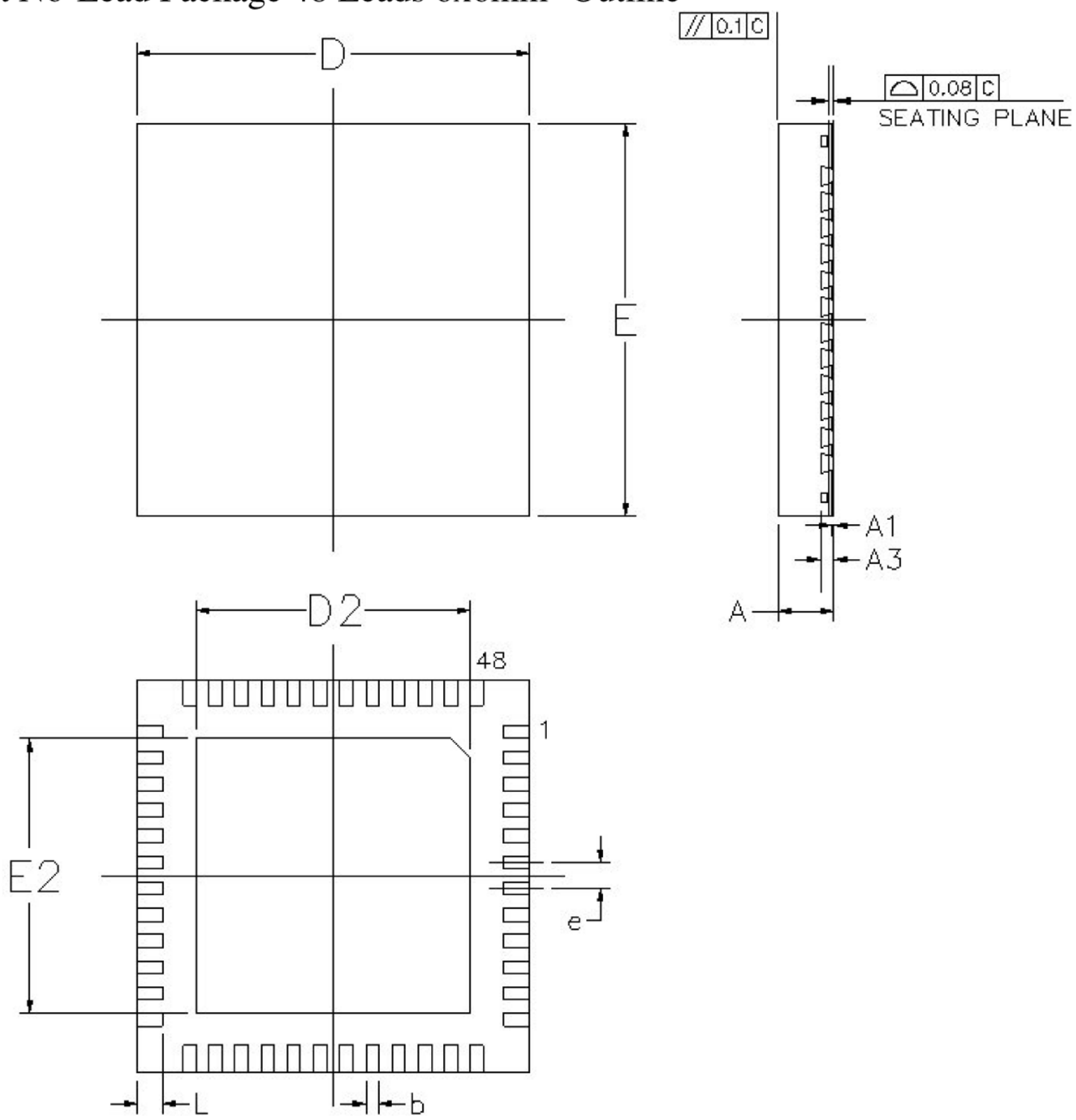

Symbol	Dimension in mm			Dimension in inch		
	Min	Nom	Max	Min	Nom	Max
A	0.75	0.85	1.00	0.030	0.034	0.039
A_1	0.00	0.02	0.05	0.000	0.001	0.002
A_3	0.20 REF			0.008 REF		
b	0.15	0.20	0.25	0.006	0.008	0.010
D/E	6.00BSC			0.236BSC		
D2/E2	4.15	4.4	4.65	0.163	0.173	0.183
e	0.40BSC			0.016BSC		
L	0.30	0.40	0.50	0.012	0.016	0.020

Notes··

1. CONTROLLING DIMENSION·· MILLIMETER(mm).
2. REFERENCE DOCUMENTL·· JEDEC MO-220.

Figure 31. Package Dimension

13. Ordering Information

Table 134. Ordering Information

Part Number	Package	Status
ALC5639-CG	48-Pin QFN (6mm x 6mm) in 'Green' Package (Tray)	Mass Production
ALC5639-CGT	48-Pin QFN (6mm x 6mm) in 'Green' Package (Tape & Reel)	Mass Production
ALC5639R-CG	48-Pin QFN (6mm x 6mm) in 'Green' Package (Tray)	Mass Production
ALC5639R-CGT	48-Pin QFN (6mm x 6mm) in 'Green' Package (Tape & Reel)	Mass Production

* "R" is special for certain assign project purpose, not for general purpose.

Realtek Semiconductor Corp.
Headquarters
No. 2, Innovation Road II
Hsinchu Science Park, Hsinchu 300, Taiwan
Tel.: +886-3-578-0211. Fax: +886-3-577-6047

www.realtek.com