CHAPTER

32

LANDING GEAR

CHAPTER 32
LANDING GEAR

Subject/Page		Date
32-EFFECTIVE PAGES		
	1 thru 3	Feb 05/2016
	4	BLANK
32-CONTENTS		
R	1	Feb 05/2016
O	2	Feb 05/2016
	3	Aug 05/2015
	4	BLANK
32-00-01		
	1	Aug 05/2014
	2	Aug 05/2014
32-00-03		
	1	Aug 05/2015
	2	Aug 05/2015
	3	Aug 05/2014
	4	Aug 05/2014
32-10-01		
R	1	Feb 05/2016
	2	Aug 05/2015
32-10-02		
	1	Aug 05/2014
	2	Aug 05/2014
32-10-03		
	1	Aug 05/2015
	2	Aug 05/2015
32-10-04		
	1	Aug 05/2014
	2	Aug 05/2014
	3	Aug 05/2014
	4	Aug 05/2014
32-10-05		
	1	Aug 05/2015
	2	Aug 05/2015
	3	Aug 05/2015
	4	Aug 05/2015
	5	Aug 05/2015
	6	Aug 05/2015
32-10-05	(cont)	
	7	Aug 05/2015
	8	Aug 05/2015
	9	Aug 05/2015
	10	BLANK
32-10-06		
	1	Aug 05/2015
	2	Aug 05/2015
	3	Aug 05/2015
	4	Aug 05/2015
32-10-07		
	1	Aug 05/2015
	2	Aug 05/2015
	3	Aug 05/2015
	4	Aug 05/2015
	5	Aug 05/2015
	6	BLANK
32-10-08		
R	1	Feb 05/2016
R	2	Feb 05/2016
R	3	Feb 05/2016
R	4	Feb 05/2016
R	5	Feb 05/2016
R	6	Feb 05/2016
R	7	Feb 05/2016
R	8	Feb 05/2016
A	9	Feb 05/2016
A	10	BLANK
32-10-09		
	1	Aug 05/2015
	2	Aug 05/2015
	3	Aug 05/2015
	4	Aug 05/2015
	5	Aug 05/2015
	6	Aug 05/2015
	7	Aug 05/2015
	8	Aug 05/2015
32-10-09	(cont)	
	9	Aug 05/2015
	10	Aug 05/2015
	11	Aug 05/2015
	12	Aug 05/2015
	13	Aug 05/2015
	14	Aug 05/2015
	15	Aug 05/2015
	16	Aug 05/2015
	17	Aug 05/2015
	18	Aug 05/2015
	19	Aug 05/2015
	20	Aug 05/2015
32-10-10		
	1	Aug 05/2015
	2	Aug 05/2015
	3	Aug 05/2015
	4	BLANK
32-10-11		
	1	Aug 05/2014
	2	Aug 05/2014
	3	Aug 05/2014
	4	Aug 05/2014
	5	Aug 05/2014
	6	Aug 05/2014
32-10-12		
	1	Aug 05/2015
	2	Aug 05/2015
	3	Aug 05/2015
	4	Aug 05/2015
	5	Aug 05/2015
	6	BLANK
32-10-13		
	1	Aug 05/2015
	2	Aug 05/2015
	3	Aug 05/2015
	4	Aug 05/2015

A = Added, R = Revised, D = Deleted, O = Overflow

32-EFFECTIVE PAGES

BOEING PROPRIETARY - Copyright © Unpublished Work - See title page for details

CHAPTER 32
LANDING GEAR

Subject/Page		Date
32-10-35		
R	1	Feb 05/2016
R	2	Feb 05/2016
32-20-01		
	1	Aug 05/2015
	2	Aug 05/2015
32-20-02		
	1	Aug 05/2015
	2	Aug 05/2015
	3	Aug 05/2015
	4	Aug 05/2015
32-20-03		
	1	Aug 05/2015
	2	Aug 05/2015
	3	Aug 05/2015
	4	Aug 05/2015
	5	Aug 05/2015
	6	Aug 05/2015
	7	Aug 05/2015
	8	Aug 05/2015
	9	Aug 05/2015
	10	Aug 05/2015
	11	Aug 05/2015
	12	Aug 05/2015
	13	Aug 05/2015
	14	Aug 05/2015
	15	Aug 05/2015
	16	Aug 05/2015
	17	Aug 05/2015
	18	Aug 05/2015
	19	Aug 05/2015
	20	Aug 05/2015
	21	Aug 05/2015
	22	BLANK
32-20-04		
	1	Aug 05/2015
	2	Aug 05/2015
32-20-04	(cont)	
	3	Aug 05/2015
	4	Aug 05/2015
	5	Aug 05/2015
	6	Aug 05/2015
32-20-05		
	1	Aug 05/2015
	2	Aug 05/2015
	3	Aug 05/2015
	4	BLANK
32-20-06		
	1	Aug 05/2015
	2	Aug 05/2015
	3	Aug 05/2015
	4	Aug 05/2015
32-20-07		
	1	Aug 05/2015
	2	Aug 05/2015
R	3	Feb 05/2016
	4	Aug 05/2015
	5	Aug 05/2015
	6	Aug 05/2015
	7	Aug 05/2015
	8	Aug 05/2015
32-20-08		
	1	Aug 05/2015
	2	Aug 05/2015
32-20-09		
	1	Aug 05/2015
	2	Aug 05/2015
32-20-21		
	1	Aug 05/2014
	2	Aug 05/2014
	3	Aug 05/2014
	4	BLANK
32-30-01		
	1	Aug 05/2015
	2	Aug 05/2015
	3	Aug 05/2015
	4	BLANK
32-30-02		
	1	Aug 05/2015
	2	Aug 05/2015
	3	Aug 05/2015
	4	Aug 05/2015
	5	Aug 05/2015
	6	Aug 05/2015
	7	Aug 05/2015
	8	Aug 05/2015
	9	Aug 05/2015
	10	Aug 05/2015
	11	Aug 05/2015
	12	Aug 05/2015
	13	Aug 05/2015
	14	Aug 05/2015
32-30-03		
R	1	Feb 05/2016
R	2	Feb 05/2016
R	3	Feb 05/2016
	4	Aug 05/2015
	5	Aug 05/2015
	6	Aug 05/2015
	7	Aug 05/2015
R	8	Feb 05/2016
R	9	Feb 05/2016
	10	BLANK
32-30-04		
	1	Aug 05/2015
	2	Aug 05/2015
	3	Aug 05/2015
	4	Aug 05/2015
	5	Aug 05/2015

A = Added, R = Revised, D = Deleted, O = Overflow

32-EFFECTIVE PAGES

BOEING PROPRIETARY - Copyright © Unpublished Work - See title page for details

CHAPTER 32
LANDING GEAR

Subject/Page		Date
32-30-04	(cont)	
	6	BLANK
32-30-05		
R	1	Feb 05/2016
	2	Aug 05/2015
	3	Aug 05/2015
	4	BLANK
32-30-06		
	1	Aug 05/2014
	2	Aug 05/2014
	3	Aug 05/2014
	4	Aug 05/2014
32-30-08		
	1	Aug 05/2014
	2	Aug 05/2014
32-30-09		
	1	Aug 05/2015
	2	Aug 05/2015
	3	Aug 05/2015
	4	Aug 05/2015
32-30-10		
	1	Aug 05/2014
	2	Aug 05/2014
	3	Aug 05/2014
	4	Aug 05/2014
32-40-01		
	1	Aug 05/2015
	2	Aug 05/2015
32-40-02		
	1	Aug 05/2015
	2	Aug 05/2015
	3	Aug 05/2015
	4	BLANK
32-40-03		
	1	Aug 05/2015
	2	Aug 05/2015
32-40-04		
	1	Aug 05/2014
	2	Aug 05/2014
	3	Aug 05/2014
	4	Aug 05/2014
32-40-05		
O	1	Feb 05/2016
R	2	Feb 05/2016
	3	Aug 05/2015
	4	Aug 05/2015
	5	Aug 05/2015
	6	Aug 05/2015
32-40-06		
	1	Aug 05/2014
	2	Aug 05/2014
32-40-07		
	1	Aug 05/2014
	2	Aug 05/2014
	3	Aug 05/2014
	4	Aug 05/2014
	5	Aug 05/2014
	6	Aug 05/2014
32-40-08		
	1	Aug 05/2014
	2	Aug 05/2014
	3	Aug 05/2014
	4	Aug 05/2014
	5	Aug 05/2014
	6	Aug 05/2014
	7	Aug 05/2014
	8	BLANK
32-40-09		
	1	Aug 05/2015
	2	Aug 05/2014
32-50-01		
	1	Aug 05/2015
	2	Aug 05/2015
32-50-02		
	1	Aug 05/2015
	2	Aug 05/2015
	3	Aug 05/2015
	4	BLANK
32-50-03		
	1	Aug 05/2015
	2	Aug 05/2015
32-70-01		
	1	Aug 05/2015
	2	Aug 05/2014
	3	Aug 05/2015
	4	BLANK

A = Added, R = Revised, D = Deleted, O = Overflow

32-EFFECTIVE PAGES

BOEING PROPRIETARY - Copyright © Unpublished Work - See title page for details

CHAPTER 32
LANDING GEAR

SUBJECT	TITLE	PART NO.
32	**LANDING GEAR**	
32-00-01	DOWNLOCK EQUIPMENT - NOSE LANDING GEAR AND MAIN LANDING GEAR	C32026-1, -6
32-00-03	ACTUATOR/DEACTUATOR SET - PROXIMITY SENSORS	A27092-106, -84
32-10-01	TORQUE WRENCH ADAPTER - AFT BEARING RETAINER NUT, MAIN LANDING GEAR TRUNNION	C32013-1
32-10-02	RETENTION STRAP EQUIPMENT - INNER CYLINDER, NOSE AND MAIN LANDING GEAR	C32030-10
32-10-03	ADAPTER ASSEMBLY - WRENCH, HOOK SPANNER	F80033-1, -8
32-10-04	PIN INSTALLATION/REMOVAL KIT - MAIN LANDING GEAR	C32029-38, -45
32-10-05	PULLER EQUIPMENT - AXLE/BRAKE SLEEVE, MAIN LANDING GEAR (CE)	C32032-98
32-10-06	PULLER EQUIPMENT - FUSE PIN, MAIN LANDING GEAR FORWARD TRUNNION SUPPORT	C32015-1, -18
32-10-07	REMOVAL/INSTALLATION EQUIPMENT - AFT TRUNNION PIN, MAIN LANDING GEAR	C32031-1, -22
32-10-08	REMOVAL/INSTALLATION EQUIPMENT - MAIN LANDING GEAR	C32034-227, -273, -9
32-10-09	REPLACEMENT EQUIPMENT - LOWER BEARING SEALS, MAIN LANDING GEAR	C32017-52, -53
32-10-10	HOLDING FIXTURE - MAIN LANDING GEAR	C32037-1
32-10-11	REMOVAL/INSTALLATION EQUIPMENT - ORIFICE TUBE AND METERING PIN, MAIN LANDING GEAR	C32042-61
32-10-12	HOLDING FIXTURE - SEAL CHANGE, MAIN LANDING GEAR	C32045-23
32-10-13	LEVER TOOL - DOWNLOCK RELEASE MAIN LANDING GEAR	C32052-1
32-10-35	FIXTURE EQUIPMENT - SIDE STRUT ASSEMBLY, MAIN LANDING GEAR	C32053-37
32-20-01	SPANNER WRENCH - GLAND NUT, NOSE LANDING GEAR	C32025-1, -7
32-20-02	REMOVAL/INSTALLATION EQUIPMENT - TRUNNION PIN, NOSE LANDING GEAR	C32033-1
32-20-03	REMOVAL/INSTALLATION EQUIPMENT - NOSE LANDING GEAR LOWER SEALS	C32016-33, -46
32-20-04	SPANNER WRENCH - AN STANDARD TYPE	F72959-1, -10, -11, -12, -2, -3, -31, -32, -33, -34, -35, -36, -37, -38, -39, -4, -40, -41, -42, -5, -6, -7, -8, -9
32-20-05	FREEPLAY CHECK EQUIPMENT - NOSE LANDING GEAR	C32044-1

32-CONTENTS

BOEING PROPRIETARY - Copyright © Unpublished Work - See title page for details

CHAPTER 32
LANDING GEAR

SUBJECT	TITLE	PART NO.
32-20-06	METERING PIN AND RETAINER RING REMOVAL/INSTALLATION EQUIPMENT - NOSE LANDING GEAR	C32035-1
32-20-07	BUILDUP EQUIPMENT - NOSE LANDING GEAR (CE)	C32041-57, -67
32-20-08	EXTENSION - ORIFICE TUBE, NOSE GEAR SHOCK STRUT	C32019-1
32-20-09	OUTRIGGER ASSEMBLY - REMOVAL AND INSTALLATION/ GROUND HANDLING, NOSE LANDING GEAR	C32049-1
32-20-21	CLAMP ASSEMBLY - STEERING CABLES, NOSE LANDING GEAR	C32055-1
32-30-01	SPRING EXTENDER - DOWNLOCK, NOSE AND MAIN LANDING GEAR (CE)	C32014-1
32-30-02	REMOVAL/INSTALLATION EQUIPMENT - WALKING BEAM ASSEMBLY, MAIN LANDING GEAR (CE)	C32028-1, -109, -110, -111, -3, -56, -58, -59
32-30-03	FIXTURE EQUIPMENT - ACTUATOR ASSEMBLIES, NOSE LANDING GEAR	C32036-1, -45, -46, -88
32-30-04	ROD END BEARING REMOVAL/INSTALLATION EQUIPMENT - ACTUATORS MAIN LANDING GEAR (MLG)	C32038-55
32-30-05	FORCE GAUGE EQUIPMENT - LANDING GEAR LEVER	G32021-18
32-30-06	HOLDING FIXTURE EQUIPMENT - SHIMMY DAMPER ASSEMBLY, MAIN LANDING GEAR	C32046-1
32-30-08	ADAPTER ASSEMBLY - UPLOCK, MAIN LANDING GEAR	C32048-1
32-30-09	SPRING REMOVAL/INSTALLATION EQUIPMENT - MAIN LANDING GEAR AND NOSE LANDING GEAR	J32037-106
32-30-10	HOLDING FIXTURE EQUIPMENT - FUNCTIONAL TEST, LANDING GEAR CONTROL LEVER	C32027-1, -2, -3
32-40-01	ADAPTER - ANTISKID TRANSDUCER, SPIN-UP	A32075-1, -10, -9
32-40-02	REMOVAL/INSTALLATION EQUIPMENT - WHEEL RETENTION NUT, MAIN LANDING GEAR AND NOSE LANDING GEAR	C32012-12
32-40-03	WRENCH SET - RETAINER NUT, REMOVAL/INSTALLATION, ANTI-SKID TRANSDUCER, MAIN LANDING GEAR	C32021-1
32-40-04	GAUGE EQUIPMENT - HYDRAULIC BRAKE SYSTEM PRESSURE CHECKING	F72977-44, -45, -46, -47, -62
32-40-05	THREAD PROTECTOR EQUIPMENT - MAIN LANDING GEAR/ NOSE LANDING GEAR AXLE	C32022-15, -17, -2, -20, -23, -32, -35
32-40-06	SOCKET - AXLE NUT	F80168-1, -2, -3
32-40-07	TEST EQUIPMENT - HYDRAULIC BRAKE SYSTEM PRESSURE CHECKING	C32051-1
32-40-08	MEASURING EQUIPMENT - BRAKE PEDAL	J32001-63, -64, -67, -68

32-CONTENTS

BOEING PROPRIETARY - Copyright © Unpublished Work - See title page for details

CHAPTER 32
LANDING GEAR

SUBJECT	TITLE	PART NO.
32-40-09	TRANSPORTER AND POSITIONER EQUIPMENT - MAIN LANDING GEAR	J32062-1
32-50-01	EXTENSION BAR - FUNCTIONAL TEST, NOSE LANDING GEAR STEERING	C32020-1, -15
32-50-02	SPANNER WRENCH - NOSE LANDING GEAR STEERING COLLAR RETAINER	C32040-1, -6
32-50-03	ADAPTER - FUNCTIONAL TEST, NOSE LANDING GEAR STEERING ACTUATOR	C32039-1
32-70-01	LOCKOUT PIN - TAIL SKID	C32050-1

BOEING PROPRIETARY - Copyright © Unpublished Work - See title page for details

PART NUMBER: C32026-1, -6

NAME: DOWNLOCK EQUIPMENT - NOSE LANDING GEAR AND MAIN LANDING GEAR

AIRPLANE MAINTENANCE: YES

AMM 07-11-03, AMM 07-11-21, AMM 10-12-02, AMM 32-00-01

COMPONENT MAINTENANCE: NO

USAGE & DESCRIPTION: The C32026-1 or -6 (preferred) downlock equipment is used on all 737-600 thru -900 airplanes.

C32026 is used to prevent the retraction of the nose and main landing gear. The C32026 pin fits into a hole in the downlock mechanism and locks the landing gear in the down position.

Refer to the current C32026 tool drawing, AMM 07-11-03, AMM 07-11-21, AMM 10-12-02 and AMM 32-00-01 for complete usage instructions.

C32026-1 and -6 consist of:

C32026-1		
QUANTITY	**NOMENCLATURE**	**PART NUMBER**
3	DOWNLOCK PIN ASSEMBLY	C32026-2
1	STORAGE BOX	

C32026-6		
QUANTITY	**NOMENCLATURE**	**PART NUMBER**
3	DOWNLOCK PIN ASSEMBLY	C32026-12
1	STORAGE BOX	

WEIGHT: C32026-1 or -6 - 2 lbs (1 kg)

DIMENSIONS: C32026-1 or -6 - 2 x 7 x 9.5 inches (51 x 178 x 241 mm)

NOTE: C32026-6 replaces C32026-1 for future procurement.

BOEING PROPRIETARY - Copyright © Unpublished Work - See title page for details

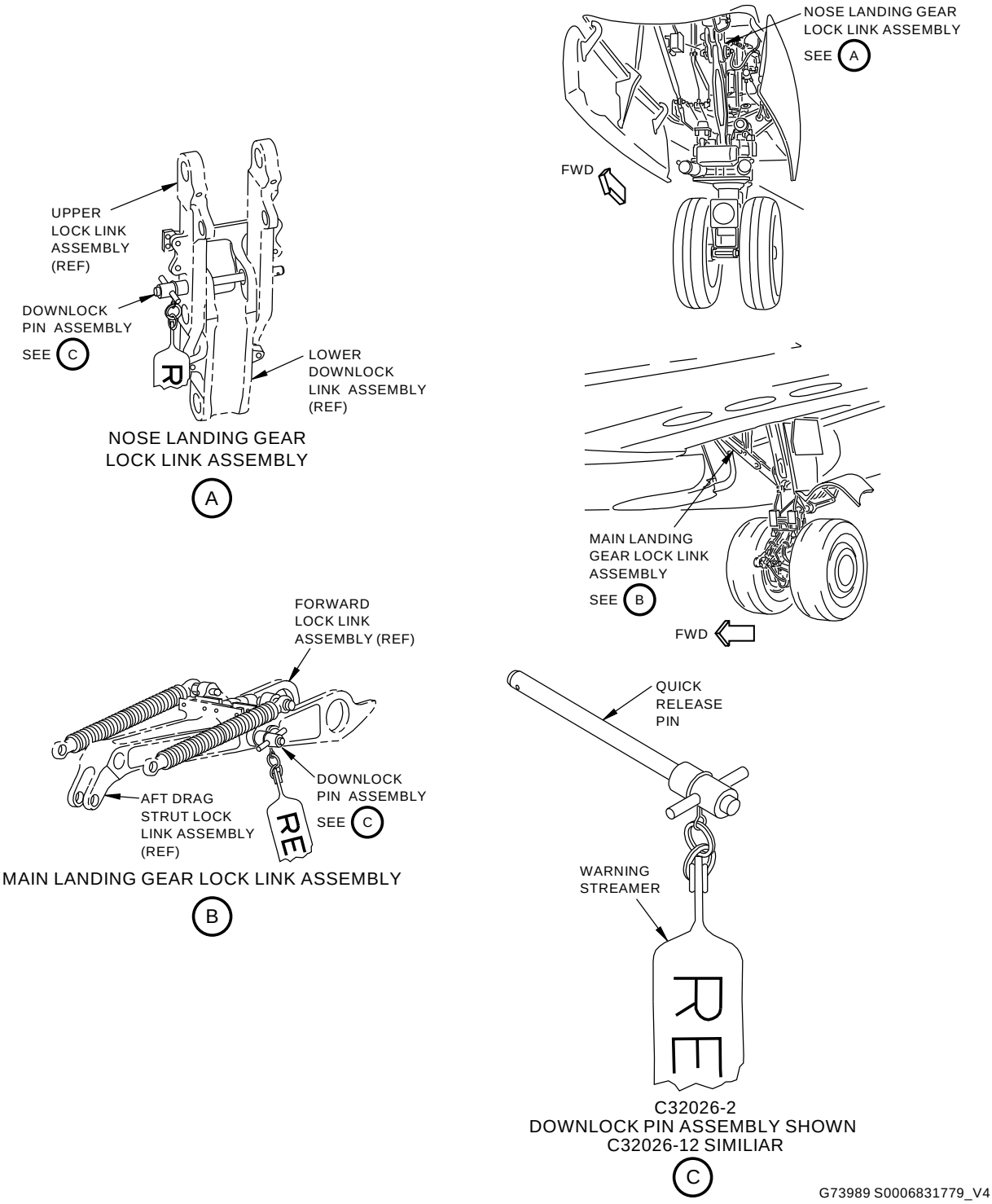

Nose and Main Landing Gear Ground Lock Assembly
Figure 1

BOEING PROPRIETARY - Copyright © Unpublished Work - See title page for details

PART NUMBER: A27092-84, -106

NAME: ACTUATOR/DEACTUATOR SET - PROXIMITY SENSORS

AIRPLANE MAINTENANCE: YES

AMM 31-31-00, AMM 31-51-00, AMM 32-09-00, AMM 32-09-10, AMM 32-31-00, AMM 32-61-21, AMM 34-23-00

COMPONENT MAINTENANCE: NO

USAGE & DESCRIPTION: The A27092-84 or -106 (preferred) actuator/deactuator set is used on all 737-600 thru -900 airplanes.

A27092 is used to actuate or deactuate proximity sensors during sensor test procedures.

Refer to the current A27092 drawing, AMM 31-31-00, AMM 31-51-00, AMM 32-09-00, AMM 32-09-10, AMM 32-31-00, AMM 32-61-21, and AMM 34-23-00 for complete usage instructions.

A27092-84 and -106 set consist of:

A27092-84		
QUANTITY	**NOMENCLATURE**	**PART NUMBER**
1	ACTUATOR ASSEMBLY	A27092-26
1	ACTUATOR ASSEMBLY	A27092-27
1	ACTUATOR ASSEMBLY	A27092-29
4	ACTUATOR ASSEMBLY	A27092-31
4	DEACTUATOR ASSEMBLY	A27092-32
4	ACTUATOR ASSEMBLY	A27092-33
4	DEACTUATOR ASSEMBLY	A27092-34
1	DEACTUATOR ASSEMBLY	A27092-62
1	DEACTUATOR ASSEMBLY	A27092-63
1	DEACTUATOR ASSEMBLY	A27092-64
4	ACTUATOR (MAGNET) ASSEMBLY	A27092-85
1	STORAGE BOX	

A27092-106		
QUANTITY	**NOMENCLATURE**	**PART NUMBER**
1	ACTUATOR ASSEMBLY	A27092-26
1	ACTUATOR ASSEMBLY	A27092-27
1	ACTUATOR ASSEMBLY	A27092-29
10	ACTUATOR ASSEMBLY	A27092-31
10	DEACTUATOR ASSEMBLY	A27092-32
4	ACTUATOR ASSEMBLY	A27092-33
4	DEACTUATOR ASSEMBLY	A27092-34

BOEING PROPRIETARY - Copyright © Unpublished Work - See title page for details

(Continued)

A27092-106		
QUANTITY	NOMENCLATURE	PART NUMBER
1	DEACTUATOR ASSEMBLY	A27092-62
1	DEACTUATOR ASSEMBLY	A27092-63
6	DEACTUATOR ASSEMBLY	A27092-64
4	ACTUATOR (MAGNET) ASSEMBLY	A27092-85
1	STORAGE BOX	

WEIGHT: A27092-84 - 10 lbs (4.54 kg)
A27092-106 - 15 lbs (6.8 kg)

DIMENSIONS: 6 x 20 x 20 inches (152 x 508 x 508 mm)

NOTE: A27092-84 supersedes A27092-61.
A27092-106 replaces A27092-84 for future procurement.
A27092 replaces G32002 for future procurement.

BOEING PROPRIETARY - Copyright © Unpublished Work - See title page for details

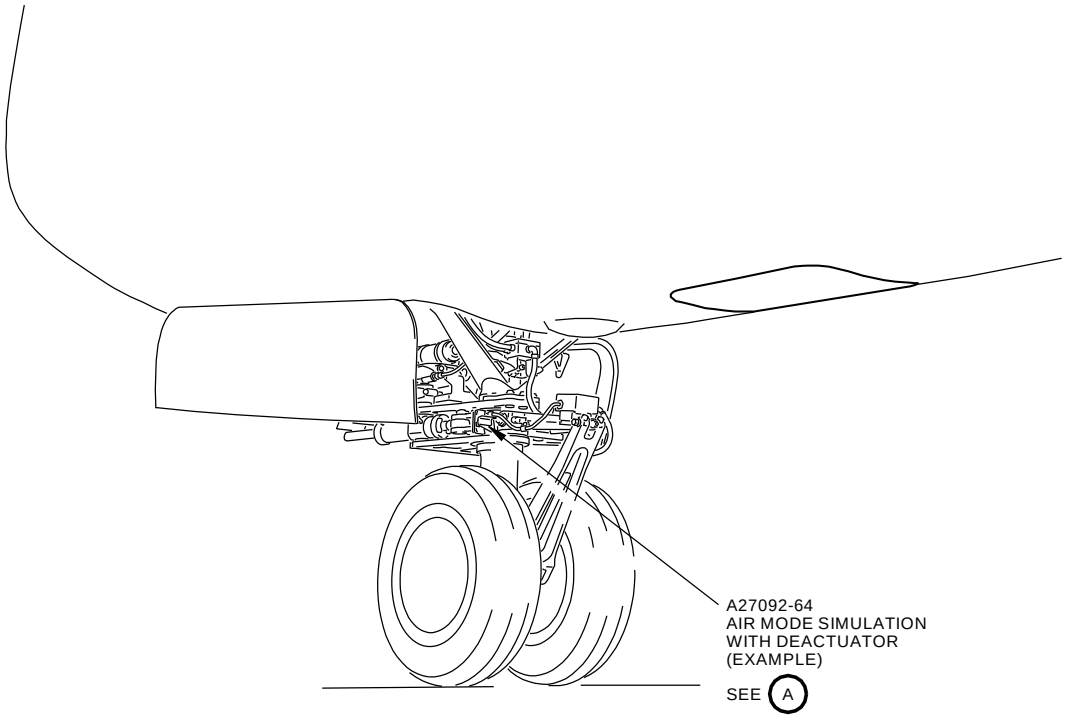

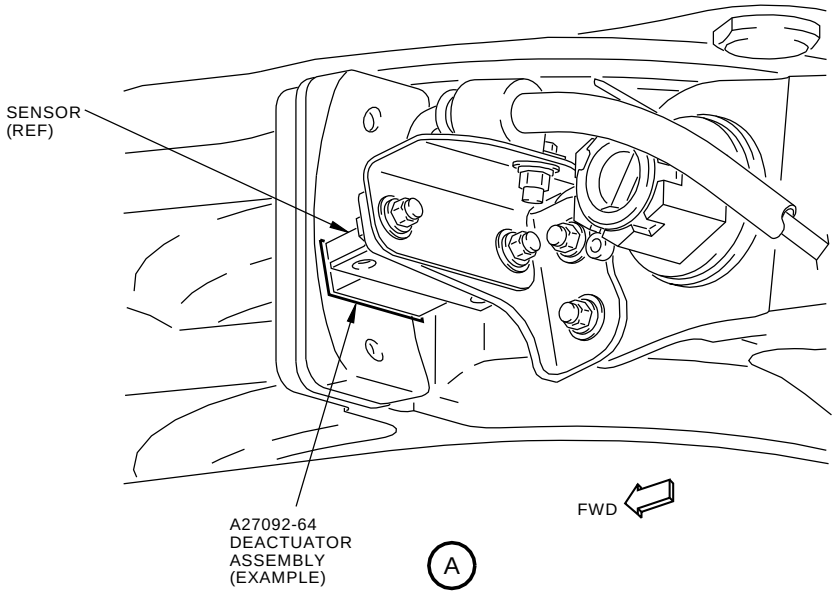

1558952 S0000287652_V1

Actuation / Deactuation Set - Sensors
Figure 1 (Sheet 1 of 2)

BOEING PROPRIETARY - Copyright © Unpublished Work - See title page for details

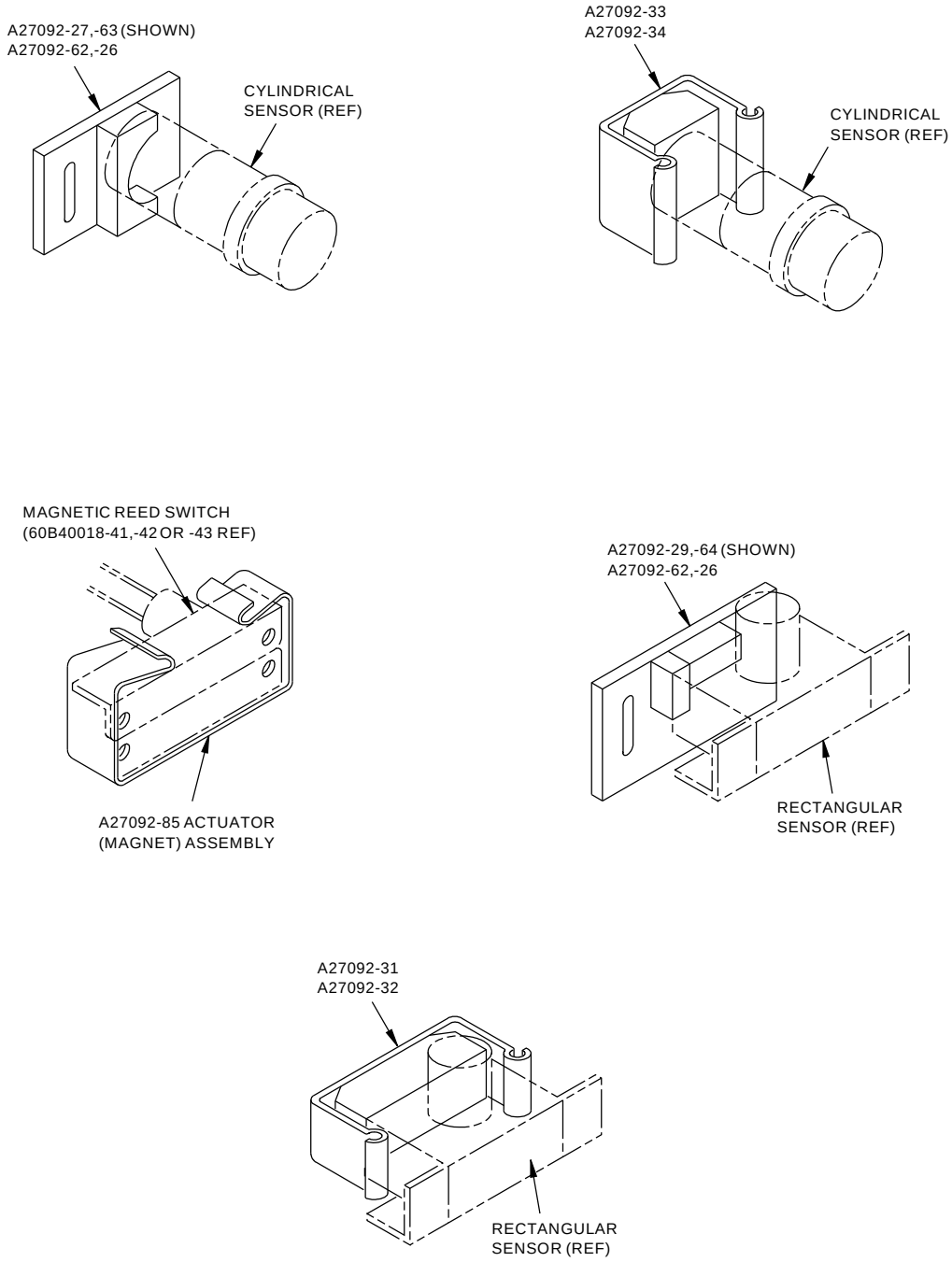

A27092-84 ACTUATOR/DEACTUATOR SET - PROXIMITY SENSORS

L97815 S0006831701_V2

Actuation / Deactuation Set - Sensors
Figure 1 (Sheet 2 of 2)

BOEING PROPRIETARY - Copyright © Unpublished Work - See title page for details

PART NUMBER: C32013-1

NAME: TORQUE WRENCH ADAPTER - AFT BEARING RETAINER NUT, MAIN LANDING GEAR TRUNNION

AIRPLANE MAINTENANCE: YES

AMM 32-11-00, AMM 57-16-02

COMPONENT MAINTENANCE: NO

USAGE & DESCRIPTION: The C32013-1 torque wrench adapter is used on all 737 airplanes except 737-100 thru -500 airplanes..

C32013 is used in conjunction with a customer-furnished 3/8-inch drive torque wrench. C32013 is used to remove or install the aft bearing retainer nut on the main landing gear trunnion. C32013 is a spanner type of device with a fitting that will accept a customer-furnished 3/8-inch drive torque wrench for installation or a 3/8-inch drive ratchet for removal.

Refer to AMM 32-11-00, AMM 57-16-02 and the current C32013 drawing for complete usage instructions.

C32013-1 consists of:

C32013-1		
QUANTITY	**NOMENCLATURE**	**PART NUMBER**
1	ADAPTER ASSEMBLY	C32013-2
1	STORAGE BOX	

WEIGHT: 1 lb (0.45 kg)

DIMENSIONS: 1 x 2 x 7 inches (25 x 51 x 178 mm)

BOEING PROPRIETARY - Copyright © Unpublished Work - See title page for details

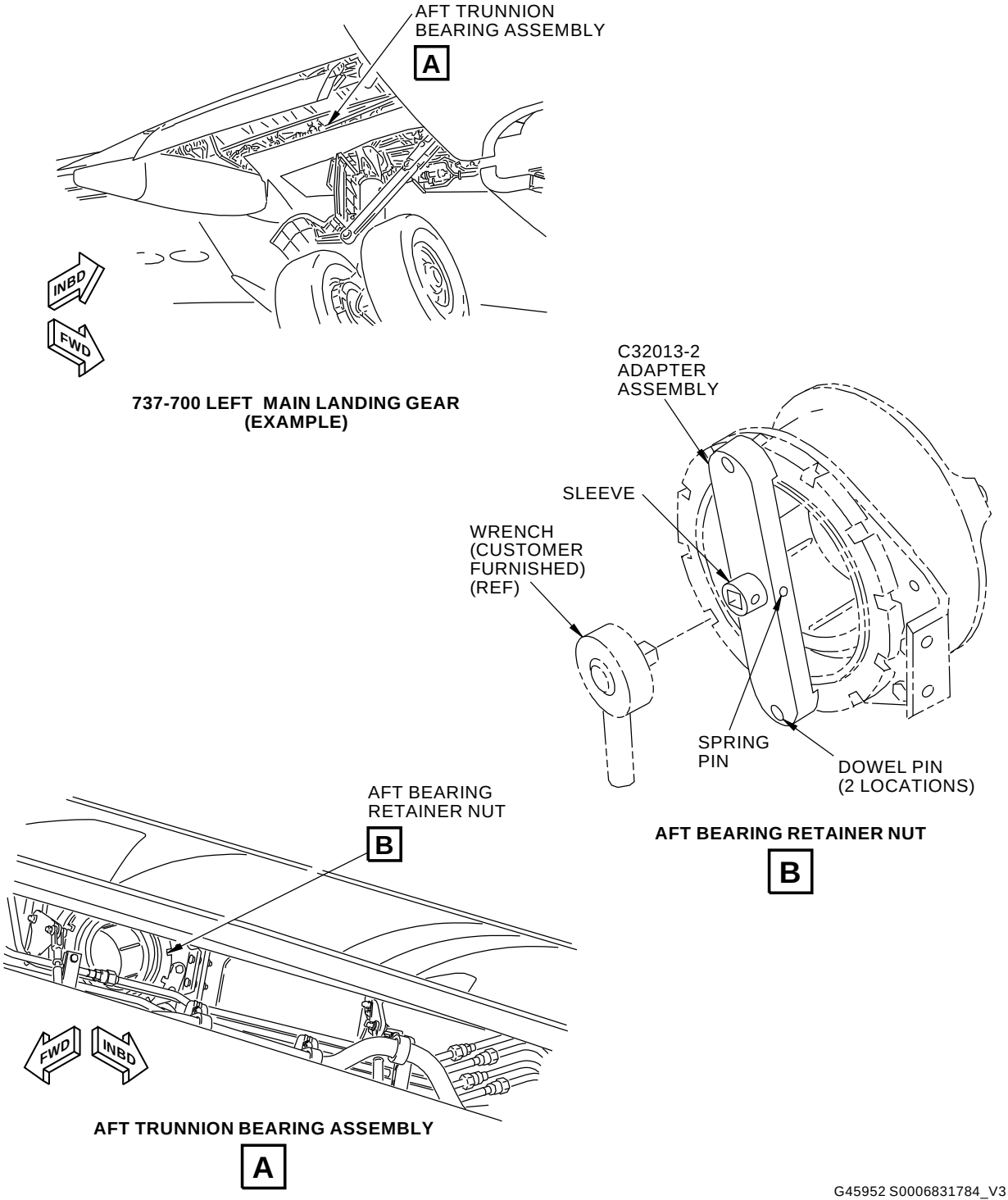

G45952 S0006831784_V3

Main Landing Gear Trunnion Aft Bearing Retainer Nut Torque Wrench Adapter
Figure 1

BOEING PROPRIETARY - Copyright © Unpublished Work - See title page for details

PART NUMBER: C32030-10

NAME: RETENTION STRAP EQUIPMENT - INNER CYLINDER, NOSE AND MAIN LANDING GEAR

AIRPLANE MAINTENANCE: YES

AMM 07-11-11, AMM 32-11-21

COMPONENT MAINTENANCE: YES

CMM 32-16-11

USAGE & DESCRIPTION: The C32030-10 retention strap equipment is used on all 737 airplanes.

C32030 is used to hold the nose and main landing gear oleos in the compressed position when the airplane is being jacked. C32030 must not be used until the affected landing gear shock strut oleo has been completely bled of air. Two straps are used to retain each main landing gear and one strap is used on the nose landing gear.

Refer to AMM 07-11-11, AMM 32-11-21, CMM 32-16-11 and the current C32030 drawing for complete usage instructions.

C32030-10 consists of:

C32030-10		
QUANTITY	**NOMENCLATURE**	**PART NUMBER**
5	RETENTION STRAP ASSEMBLY	C32030-11
1	STORAGE BOX	

WEIGHT: 10 lbs (4.5 kg)

DIMENSIONS: 8 x 16 x 19 inches (203 x 406 x 483 mm)

NOTE: C32030 replaces F80234 for future procurement.

C32030-10 supersedes C32030-1.

BOEING PROPRIETARY - Copyright © Unpublished Work - See title page for details

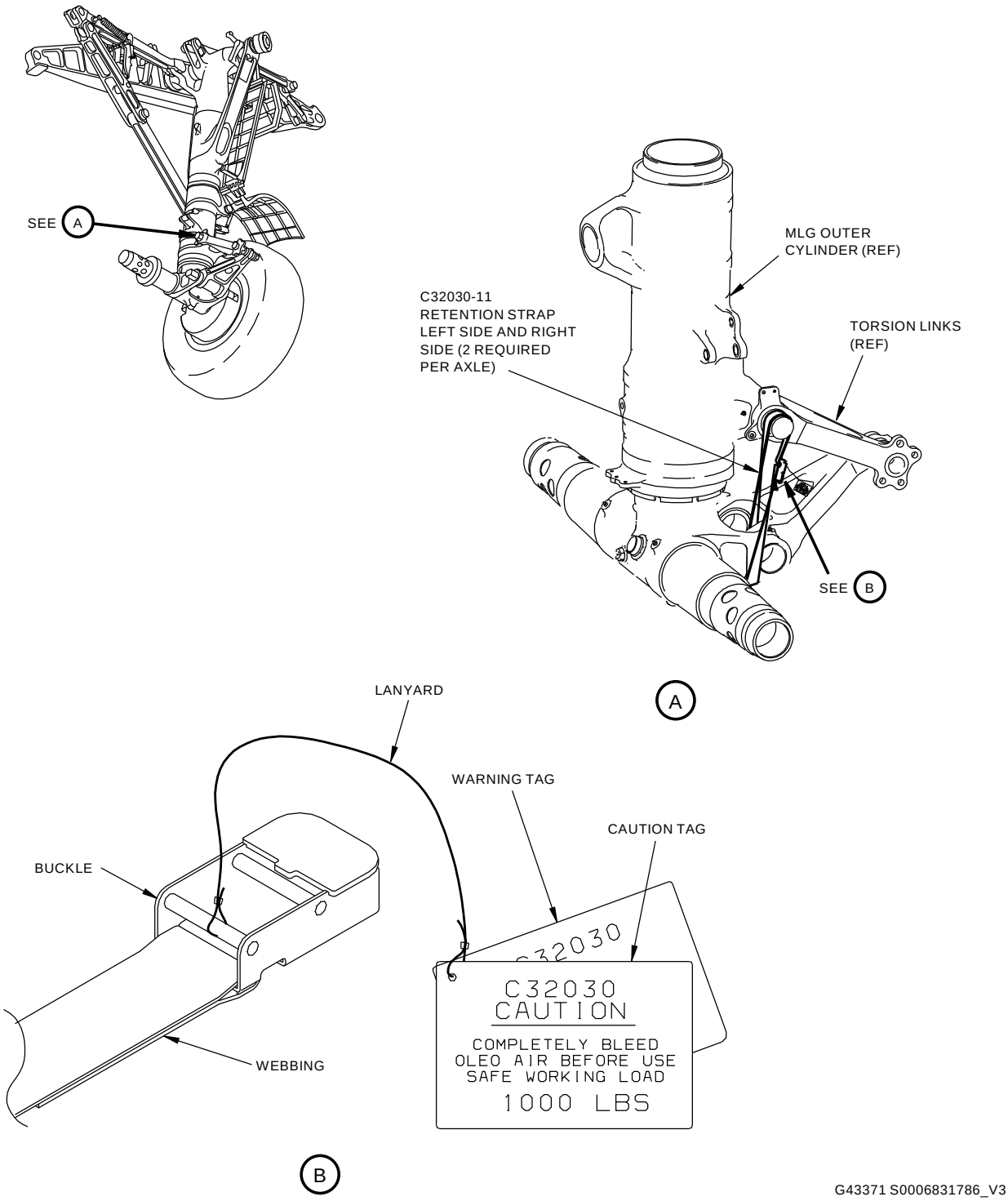

Nose and Main Landing Gear Inner Cylinder Retention Strap Equipment
Figure 1

BOEING PROPRIETARY - Copyright © Unpublished Work - See title page for details

PART NUMBER: F80033-1, -8

NAME: ADAPTER ASSEMBLY - WRENCH, HOOK SPANNER

AIRPLANE MAINTENANCE: YES

AMM 32-11-21

COMPONENT MAINTENANCE: YES

CMM 32-11-12

USAGE & DESCRIPTION: The F80033-1 adapter assembly is used on all 737-100 thru -500 airplanes.

The F80033-8 adapter assembly is used on all 737 airplanes except 737-100 thru -500 airplanes.

F80033 is used with a customer-furnished, 1/2-inch drive ratchet or torque wrench to remove or install the main landing gear shock strut gland nut.

Refer to AMM 32-11-21, CMM 32-11-12 and the current F80033 drawing for complete usage instructions.

F80033-1 and -8 consist of:

F80033-1		
QUANTITY	**NOMENCLATURE**	**PART NUMBER**
1	WRENCH	F80033-2
1	SOCKET	F80033-3

F80033-8		
QUANTITY	**NOMENCLATURE**	**PART NUMBER**
1	WRENCH ASSEMBLY	F80033-4
1	STORAGE BOX	

WEIGHT: 2 lbs (1 kg)

DIMENSIONS: 1 x 6 x 7 inches (25 x 152 x 178 mm)

BOEING PROPRIETARY - Copyright © Unpublished Work - See title page for details

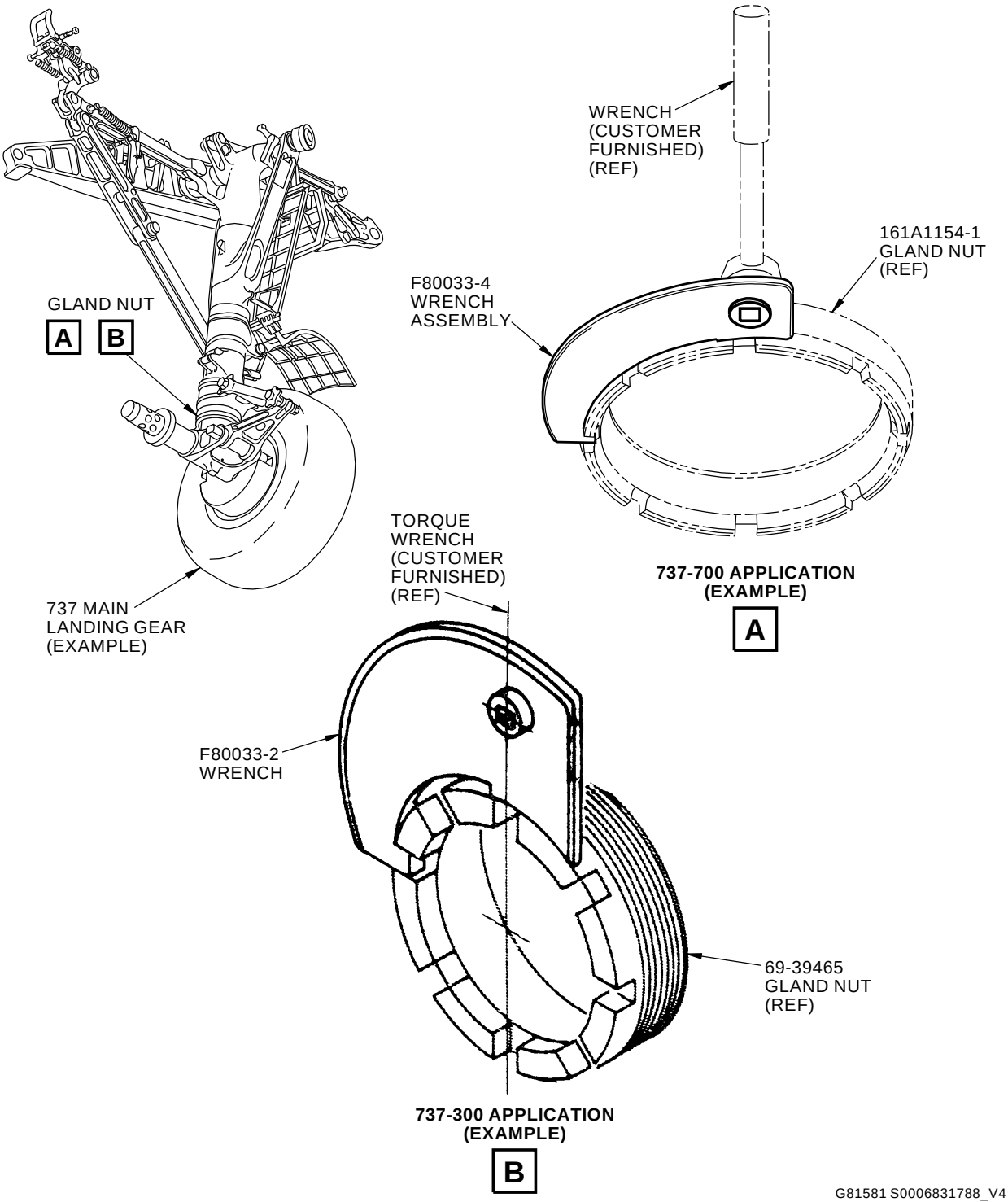

Hook Spanner Wrench Adapter Assembly
Figure 1

BOEING PROPRIETARY - Copyright © Unpublished Work - See title page for details

PART NUMBER: C32029-38, -45

NAME: PIN INSTALLATION/REMOVAL KIT - MAIN LANDING GEAR

AIRPLANE MAINTENANCE: YES

AMM 32-11-00, AMM 32-11-61, AMM 32-11-71, AMM 32-11-89, AMM 32-32-11, AMM 32-32-93

COMPONENT MAINTENANCE: YES

CMM 32-11-13

USAGE & DESCRIPTION: The C32029-38 or -45 (preferred) pin installation and removal kit is used on all 737-600 thru -900 airplanes.

C32029 is used to remove or install the various main landing gear pins during assembly/disassembly of the landing gear.

Refer to the current C32029 tool drawing, AMM 32-11-00, AMM 32-11-61, AMM 32-11-71, AMM 32-11-89, AMM 32-32-11, AMM 32-32-93 and CMM 32-11-13 for complete usage instructions.

C32029-38 and -45 consist of:

C32029-38		
QUANTITY	**NOMENCLATURE**	**PART NUMBER**
1	WRENCH ADAPTER ASSEMBLY	C32029-3
1	WRENCH ADAPTER ASSEMBLY	C32029-4
1	WRENCH ADAPTER ASSEMBLY	C32029-6
1	WRENCH ADAPTER ASSEMBLY	C32029-7
1	SLUG DRIVER ASSEMBLY	C32029-8
1	THREAD PROTECTOR	C32029-9
1	THREAD PROTECTOR	C32029-10
1	SLUG DRIVER	C32029-11
1	THREAD PROTECTOR	C32029-12
1	THREAD PROTECTOR	C32029-13
1	THREAD PROTECTOR	C32029-14
1	THREAD PROTECTOR	C32029-15
1	THREAD PROTECTOR	C32029-16
1	SLUG DRIVER	C32029-17
1	WRENCH ADAPTER ASSEMBLY	C32029-31
1	THREAD PROTECTOR	C32029-33
1	WRENCH ADAPTER ASSEMBLY	C32029-39
1	STORAGE BOX	

BOEING PROPRIETARY - Copyright © Unpublished Work - See title page for details

C32029-45		
QUANTITY	NOMENCLATURE	PART NUMBER
1	WRENCH ADAPTER ASSEMBLY	C32029-3
1	WRENCH ADAPTER ASSEMBLY	C32029-4
1	WRENCH ADAPTER ASSEMBLY	C32029-5
1	WRENCH ADAPTER ASSEMBLY	C32029-6
1	WRENCH ADAPTER ASSEMBLY	C32029-7
1	SLUG DRIVER ASSEMBLY	C32029-8
1	THREAD PROTECTOR	C32029-9
1	THREAD PROTECTOR	C32029-10
1	SLUG DRIVER	C32029-11
1	THREAD PROTECTOR	C32029-12
1	THREAD PROTECTOR	C32029-13
1	THREAD PROTECTOR	C32029-14
1	THREAD PROTECTOR	C32029-15
1	THREAD PROTECTOR	C32029-16
1	SLUG DRIVER	C32029-17
1	WRENCH ADAPTER ASSEMBLY	C32029-31
1	THREAD PROTECTOR	C32029-33
1	WRENCH ADAPTER ASSEMBLY	C32029-39
1	WRENCH ADAPTER	C32029-48
1	WRENCH ADAPTER	C32029-49
1	WRENCH ADAPTER	C32029-50
1	THREAD PROTECTOR	C32029-51
1	STORAGE BOX	

WEIGHT: C32029-38 - 33 lbs (15 kg)
C32029-45 - 35 lbs (16 kg)

DIMENSIONS: C32029-38 or -45 - 8 x 24 x 24 inches (203 x 610 x 610 mm)

NOTE: C32029-45 replaces C32029-38 for future procurement.
C32029-38 supersedes C32029-1 and -30.

BOEING PROPRIETARY - Copyright © Unpublished Work - See title page for details

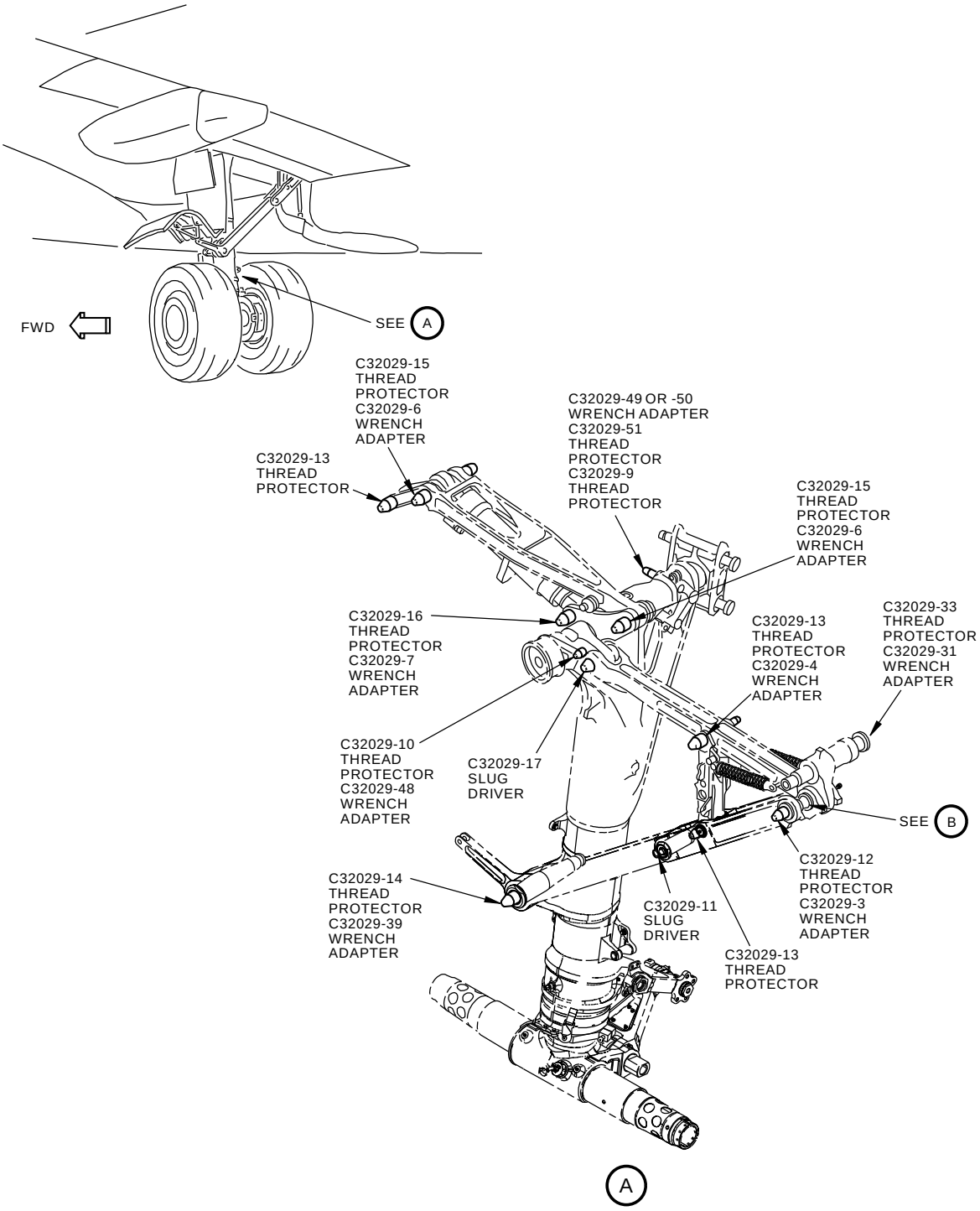

G85188 S0006831790_V4

Main Landing Gear Pin Installation/Removal Kit
Figure 1

BOEING PROPRIETARY - Copyright © Unpublished Work - See title page for details

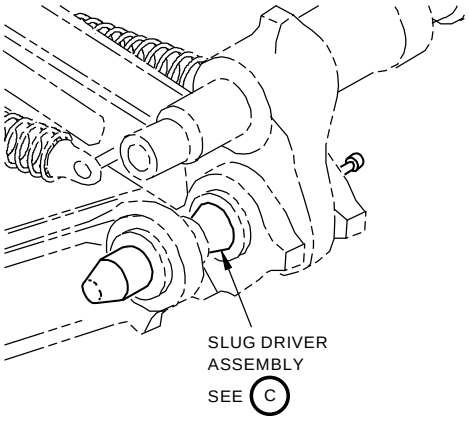

B

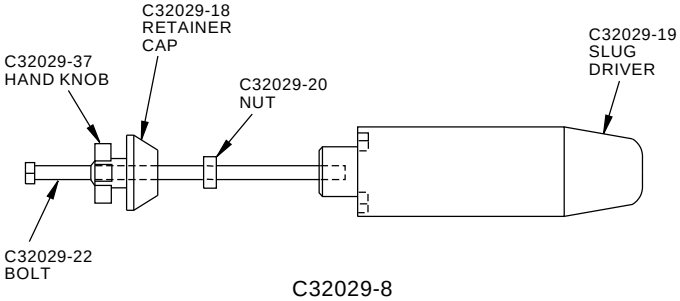

C32029-8
SLUG DRIVER ASSEMBLY

C

G85494 S0006831791_V4

Main Landing Gear Pin Installation/Removal Kit
Figure 2

BOEING PROPRIETARY - Copyright © Unpublished Work - See title page for details

PART NUMBER: C32032-98

NAME: PULLER EQUIPMENT - AXLE/BRAKE SLEEVE, MAIN LANDING GEAR (CE)

AIRPLANE MAINTENANCE: YES

AMM 32-11-85, AMM 32-13-12, AMM 32-41-42

COMPONENT MAINTENANCE: YES

CMM 32-11-12, CMM 32-11-78

USAGE & DESCRIPTION: The C32032-98 (CE qualified) puller equipment is used on all 737 airplanes, except 737-100 thru -500 airplanes..

C32032 is used to remove the axle sleeve, axle, axle brake sleeve and retention pins on the 737 main landing gear.

C32032-98 conforms with Article 3, Paragraph 3 of the Pressure Equipment Directive 97/23/EC.

Refer to AMM 32-11-85, AMM 32-13-12, AMM 32-41-42, CMM 32-11-12, CMM 32-11-78 and the current C32032 drawing for complete usage instructions.

C32032-98 consists of:

C32032-98		
QUANTITY	**NOMENCLATURE**	**PART NUMBER**
1	RC-50 ASSEMBLY	C32032-10
1	THREAD PROTECTOR	C32032-13
1	AXLE DRIFT PIN	C32032-14
4	SCREW	C32032-50
1	WHEEL COLLAR ASSEMBLY	C32032-58
1	PULLER ASSEMBLY	C32032-60
2	ROD END ASSEMBLY	C32032-61
2	AXLE ROD END ASSEMBLY	C32032-62
2	AXLE EXTENSION ASSEMBLY	C32032-65
2	BRAKE PULLER EXTENSION	C32032-68
2	WHEEL PULLER EXTENSION	C32032-69
1	BRAKE COLLAR ASSEMBLY	C32032-99
1	AXLE COLLAR ASSEMBLY	C32032-100
1	HAND PUMP ASSEMBLY	C32032-101
1	AIR-HYDRAULIC PUMP ASSEMBLY	C32032-102
1	GAUGE ASSEMBLY	C32032-103
1	HOSE ASSEMBLY	C32032-104
2	WHEEL PIN	C32032-105
2	BRAKE PIN	C32032-106

BOEING PROPRIETARY - Copyright © Unpublished Work - See title page for details

(Continued)

C32032-98		
QUANTITY	NOMENCLATURE	PART NUMBER
2	AXLE PIN ASSEMBLY	C32032-123
1	STORAGE BOX	

WEIGHT: 110 lbs (50 kg)

DIMENSIONS: 6 x 24 x 30 inches (152 x 609 x 762 mm)

NOTE: C32032-98 supersedes C32032-59.

DECLARATION OF CONFORMITY: C32032 requires a written Declaration of Conformity from the C32032 fabricator if it is to be used in the European Union. The design of C32032 meets the European requirements of Machinery Directive 2006/42/EC including its amendments. When used within the European Union, the fabricator of C32032 must also meet the requirements of that directive. At a minimum for the tool fabricator, this requires the retention of a technical file, a labeling of the equipment with the CE mark, and the completion of an EC Declaration of Conformity. If C32032 is to be used within the European Union and the Declaration of Conformity is missing, contact the fabricator of C32032 for a replacement Declaration of Conformity.

OPERATING INSTRUCTIONS: Refer to the current C32032 drawing, AMM 32-11-85, AMM 32-13-12, AMM 32-41-42, CMM 32-11-12 and CMM 32-11-78 maintenance procedures for detailed instructions on the use of C32032. C32032 shall only be used in conjunction with Boeing maintenance procedures to maintain Boeing airplanes.

MAINTENANCE: General Cleaning: Basic care of the equipment includes cleaning the equipment of dirt, corrosives, or contaminants. Wipe off all surface dirt with a sponge dampened in plain water. Squeeze the sponge dry. Dip the sponge in a mild solution of water and commercial soap or detergent, clean the components and wipe dry with a clean cloth. Hang the components freely to dry, but away from excessive heat or steam.

CALIBRATION: Calibration information is found on the tool drawing or by contacting the tool manufacturer.

INSPECTION: FREQUENT

General Inspection (before use):

1. Missing fasteners
2. Notes, Cautions and Warnings are legible
3. Usage placards are legible

BOEING PROPRIETARY - Copyright © Unpublished Work - See title page for details

Frequent inspection should be done before each use by visually inspecting the hardware for any physical damage, wear and corrosion. Missing or damaged parts should be replaced. If inspection reveals a defect in the condition, remove the unit from service. The device shall not be used until the hazardous deficiencies are corrected.

PERIODIC

Welding Inspection:

1. Magnetic particle or dye penetrant inspection for all welds, after all proof load tests.
2. Inspect and evaluate per GSE Welding Document A00001 Inspection Requirements Tables 1 & 2, and Acceptance Criteria Table 3.
3. Reject cracked or deformed parts.

Mechanical Device:

1. A written record of a visual inspection, by a qualified person is required.
2. Inspection is made of external conditions for a continuing evaluation of the following factors:
   - Loose bolts or fasteners.
   - Excessive wear of linkages and other mechanical parts.
   - Excessive wear at load support clevises or pins.
   - Deficiencies found during the inspection are analyzed and the device shall not be used, if deficiencies are determined to be hazardous.
   - The device shall not be used until the hazardous deficiencies are corrected.

STORAGE: C32032 shall be stored clean, dry, free of exposure to fumes or corrosive elements, indoors and in the furnished storage box.

DECOMMISSIONING: Parts and assemblies of this equipment shall be permanently altered to prevent their unauthorized reuse. Recycling is the preferred manner of disposal for those materials where that option is available.

BOEING PROPRIETARY - Copyright © Unpublished Work - See title page for details

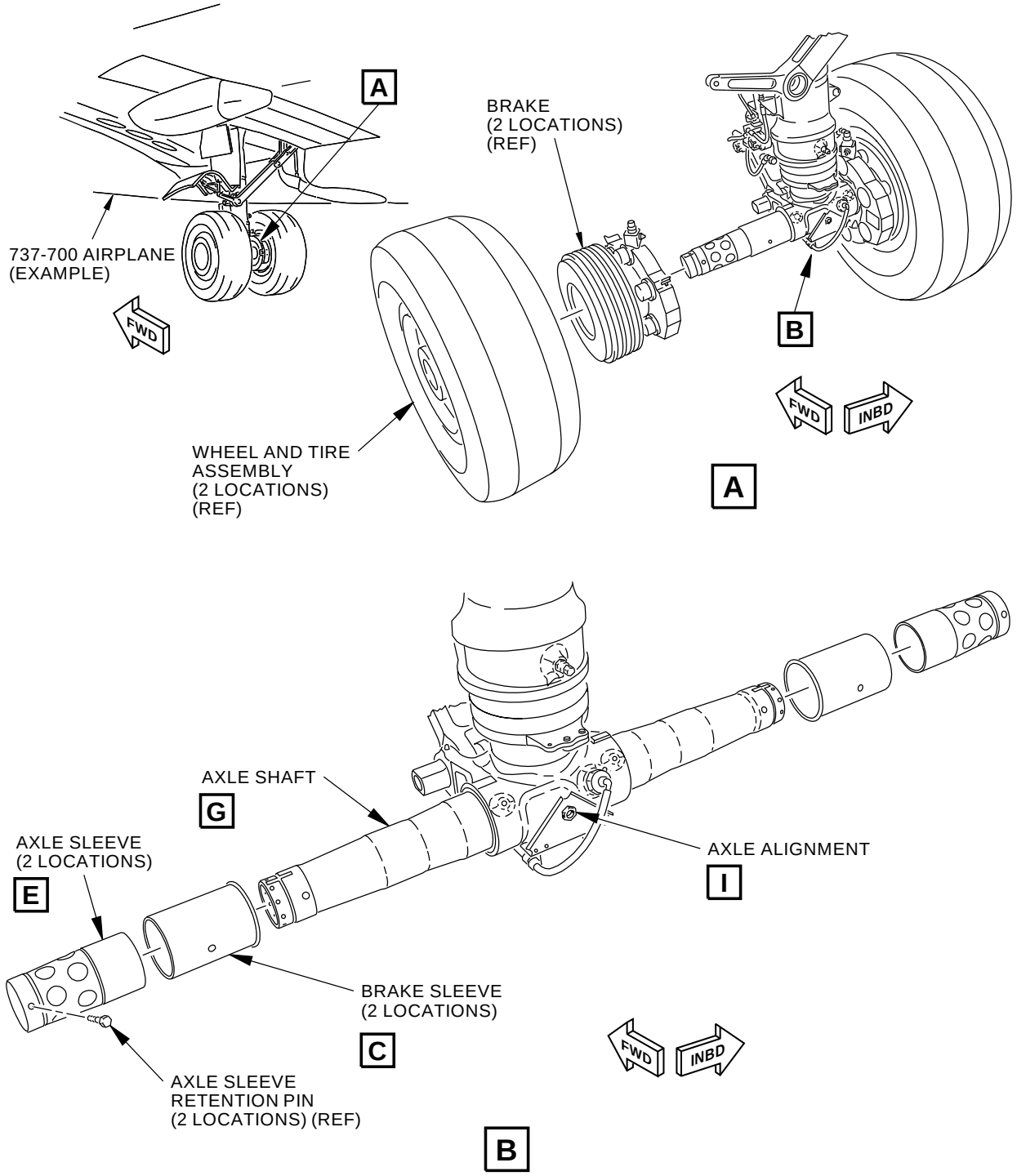

H32244 S0006831793_V5

Main Landing Gear Axle/Brake Sleeve Puller Equipment
Figure 1 (Sheet 1 of 5)

BOEING PROPRIETARY - Copyright © Unpublished Work - See title page for details

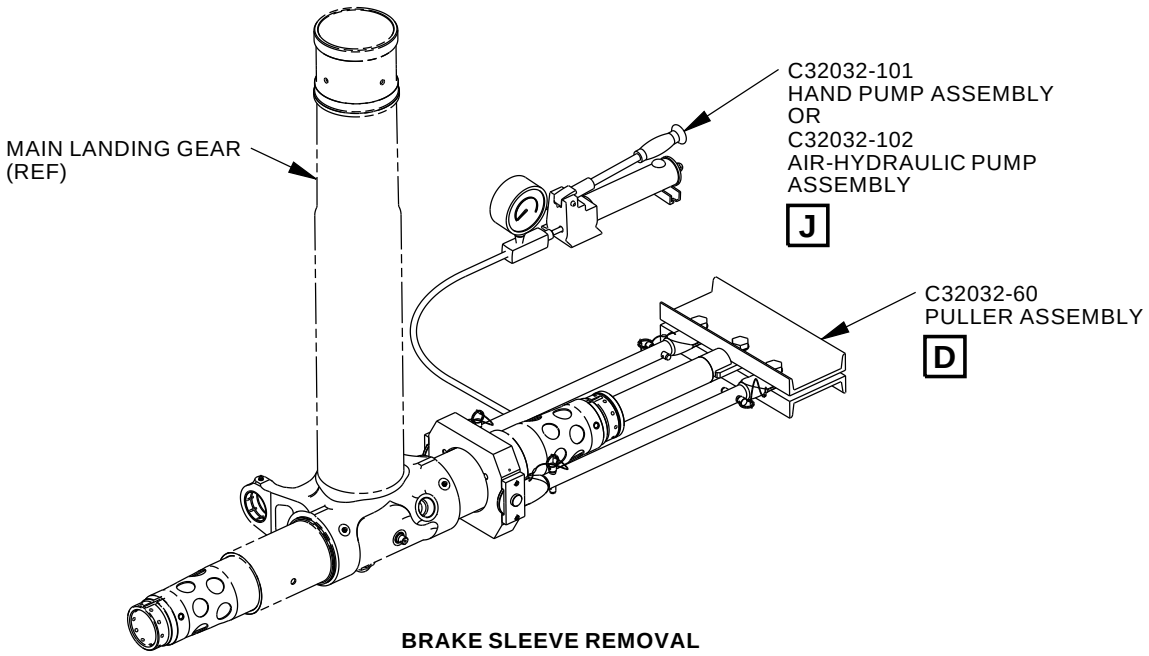

BRAKE SLEEVE REMOVAL

C

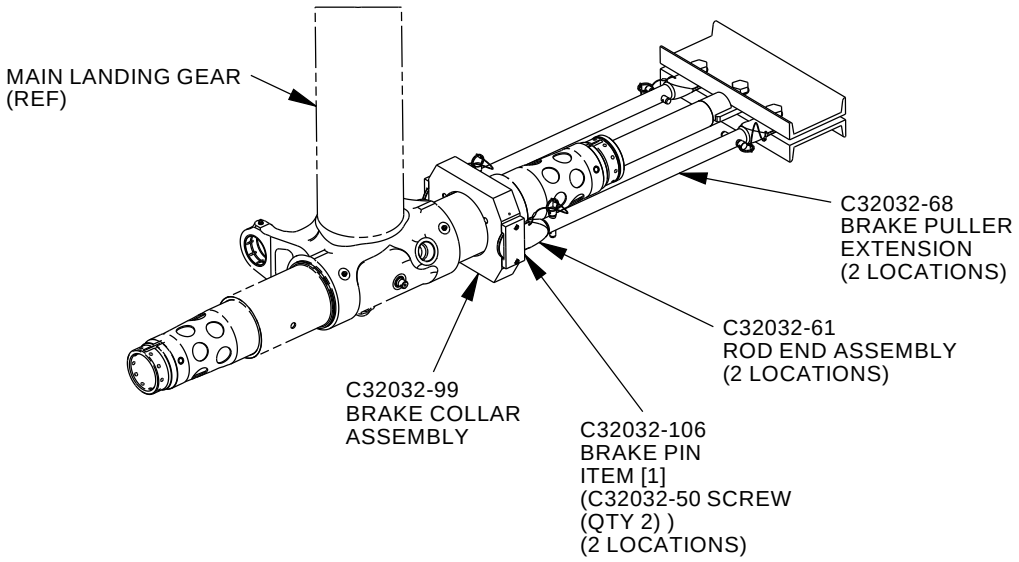

D

H32386 S0006831794_V5

Main Landing Gear Axle/Brake Sleeve Puller Equipment
Figure 1 (Sheet 2 of 5)

BOEING PROPRIETARY - Copyright © Unpublished Work - See title page for details

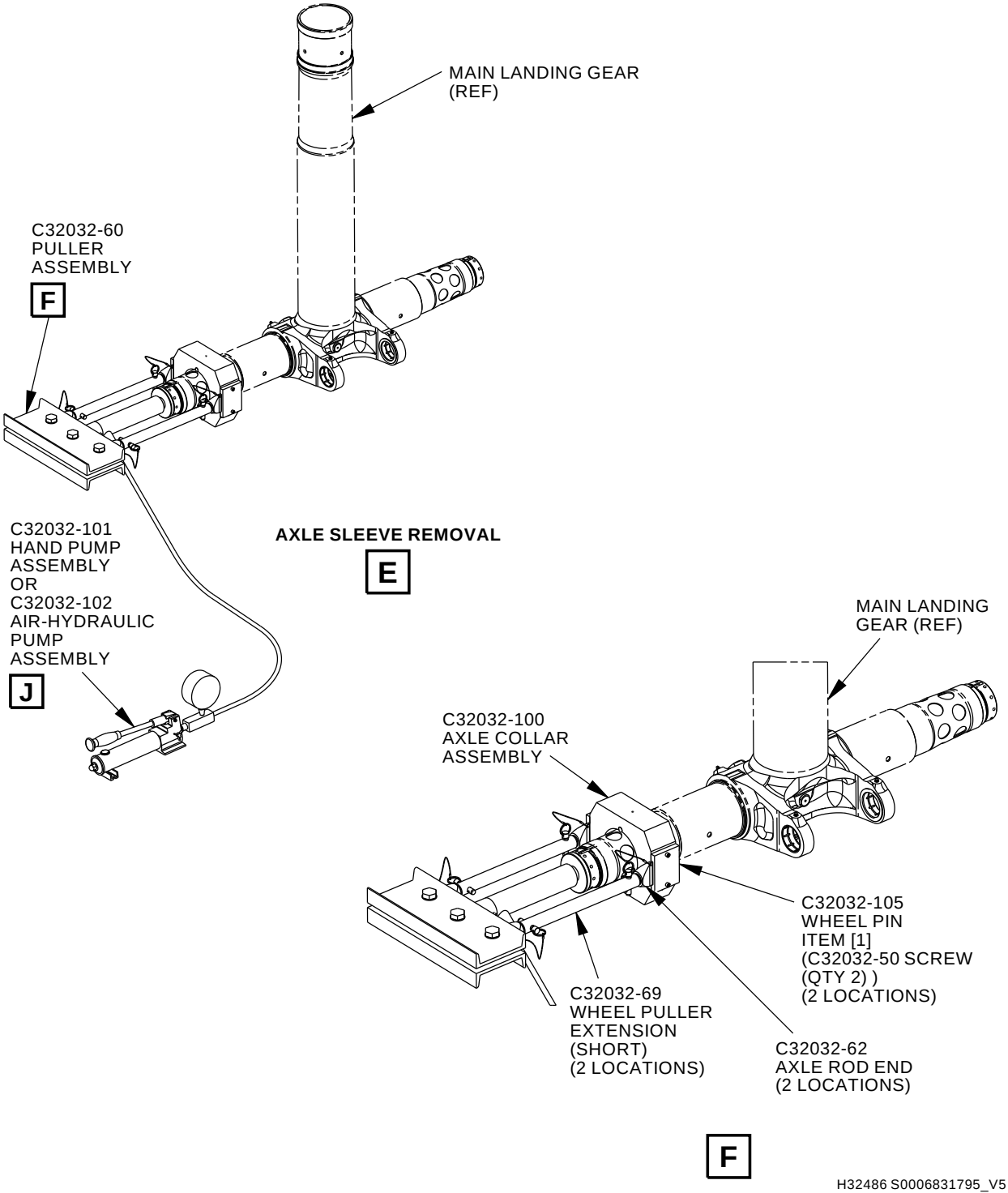

Main Landing Gear Axle/Brake Sleeve Puller Equipment
Figure 1 (Sheet 3 of 5)

BOEING PROPRIETARY - Copyright © Unpublished Work - See title page for details

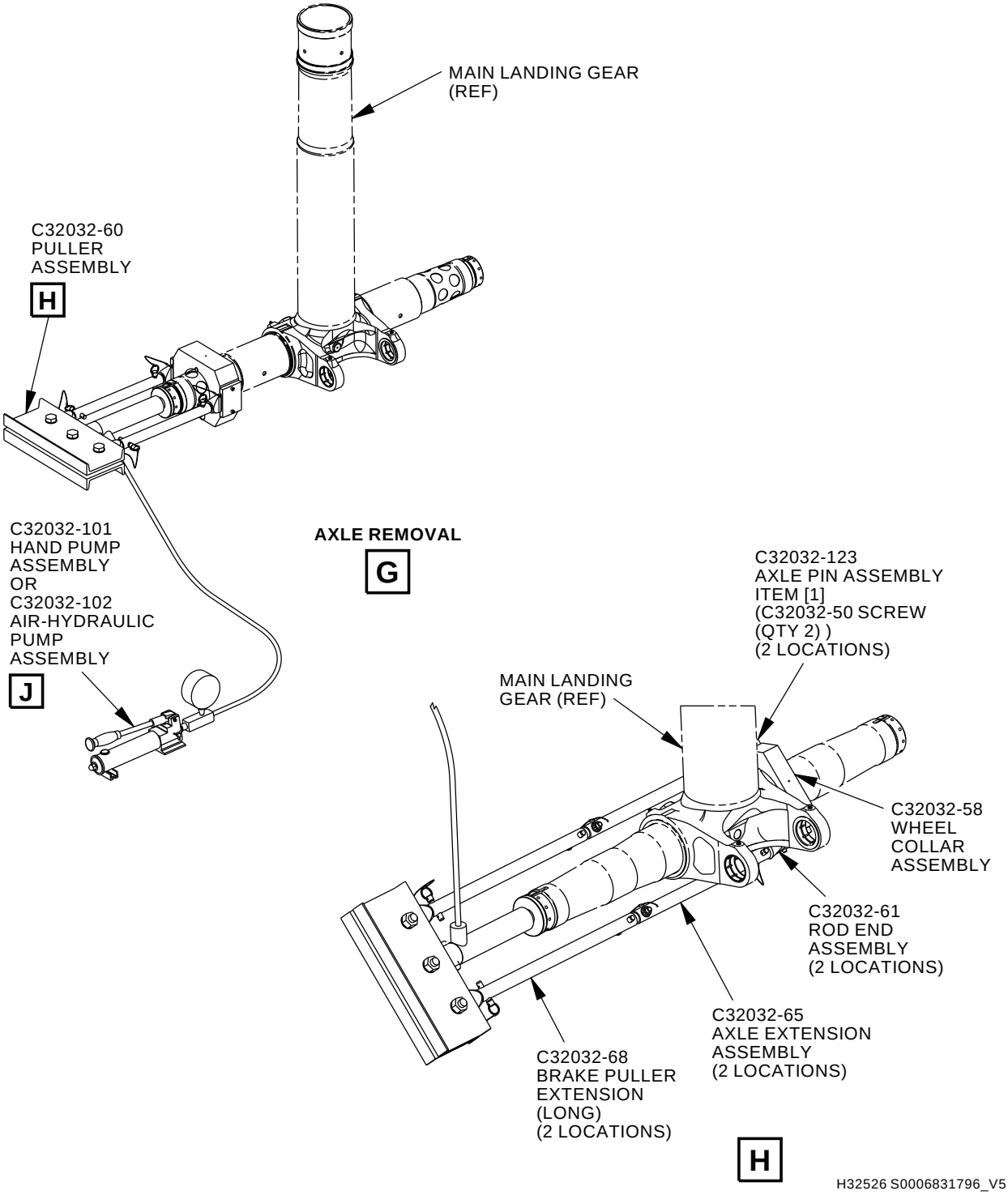

Main Landing Gear Axle/Brake Sleeve Puller Equipment
Figure 1 (Sheet 4 of 5)

BOEING PROPRIETARY - Copyright © Unpublished Work - See title page for details

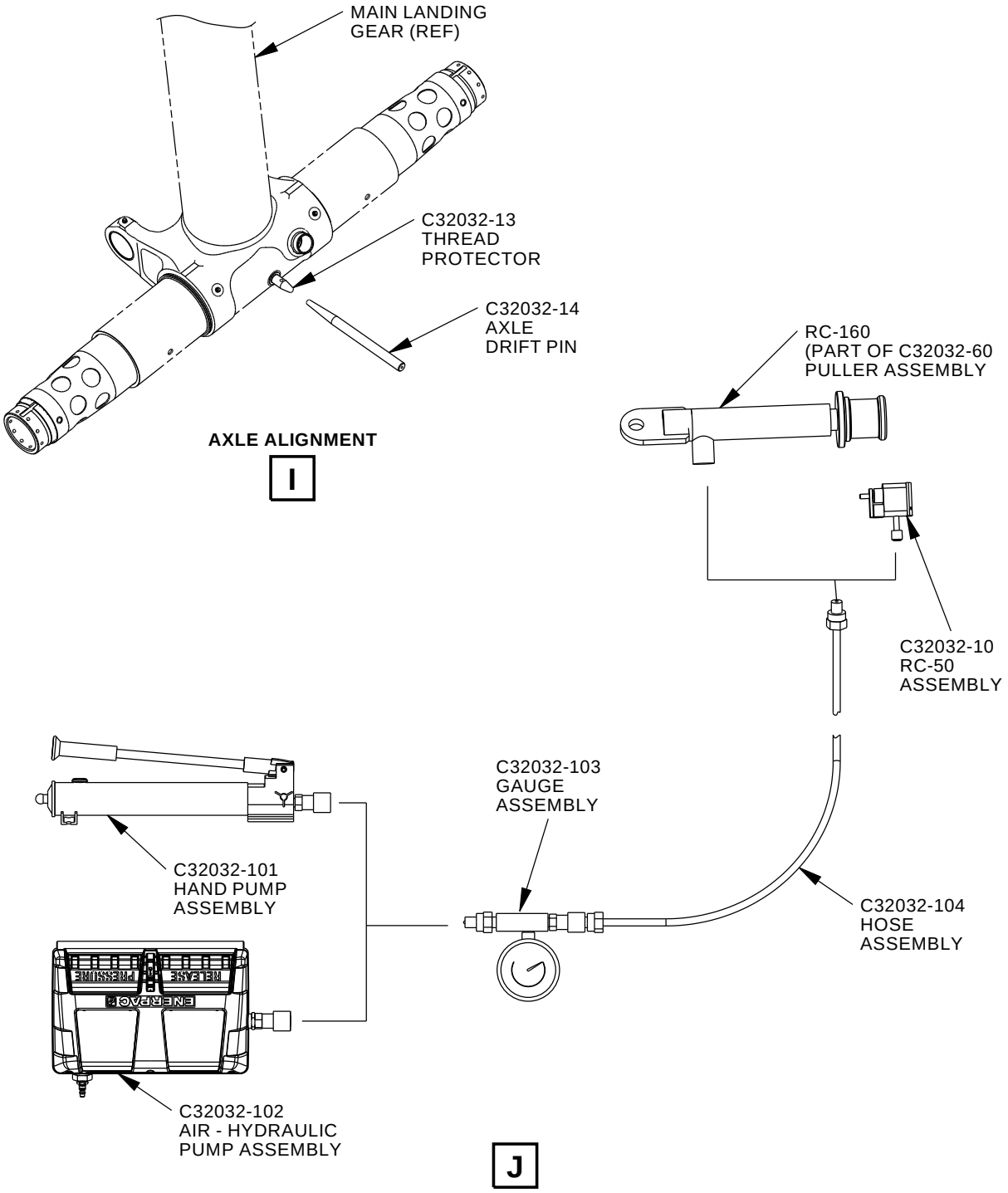

H32527 S0006831797_V5

Main Landing Gear Axle/Brake Sleeve Puller Equipment
Figure 1 (Sheet 5 of 5)

BOEING PROPRIETARY - Copyright © Unpublished Work - See title page for details

REPAIRABLE/REPLACEABLE PARTS			
ITEM NUMBER	PART NUMBER	NOMENCLATURE	VENDOR CODE
[1]	C32032-50	SCREW	- - -

BOEING PROPRIETARY - Copyright © Unpublished Work - See title page for details

PART NUMBER: C32015-1, -18

NAME: PULLER EQUIPMENT - FUSE PIN, MAIN LANDING GEAR FORWARD TRUNNION SUPPORT

AIRPLANE MAINTENANCE: YES

AMM 32-11-83

COMPONENT MAINTENANCE: NO

USAGE & DESCRIPTION: The C32015-1 puller equipment is used on 737-600 thru -900 airplanes.

The C32015-18 puller equipment is used on 737-900ER, 737-7, 737-8, 737-8200 and 737-9 airplanes.

C32015 is used to remove the main landing gear fuse pins holding the housing assembly to the forward trunnion support.

Refer to AMM 32-11-83 and the current C32015 drawing for complete usage instructions.

C32015-1 and -18 consist of:

C32015-1		
QUANTITY	**NOMENCLATURE**	**PART NUMBER**
1	PULLER ASSEMBLY	C32015-2
1	THREAD PROTECTOR	C32015-5*[1]
1	DRIFT PIN ASSEMBLY	C32015-15
1	STORAGE BOX	

*[1] C32015-5 IS PART OF C32015-2.

C32015-18		
QUANTITY	**NOMENCLATURE**	**PART NUMBER**
1	PULLER ASSEMBLY	C32015-19
1	THREAD PROTECTOR	C32015-21*[1]
1	DRIFT PIN ASSEMBLY	C32015-15
1	STORAGE BOX	

*[1] C32015-21 IS PART OF C32015-19.

WEIGHT: 6 lbs (3 kg)

DIMENSIONS: 2 x 6 x 23 inches (51 x 152 x 584 mm)

BOEING PROPRIETARY - Copyright © Unpublished Work - See title page for details

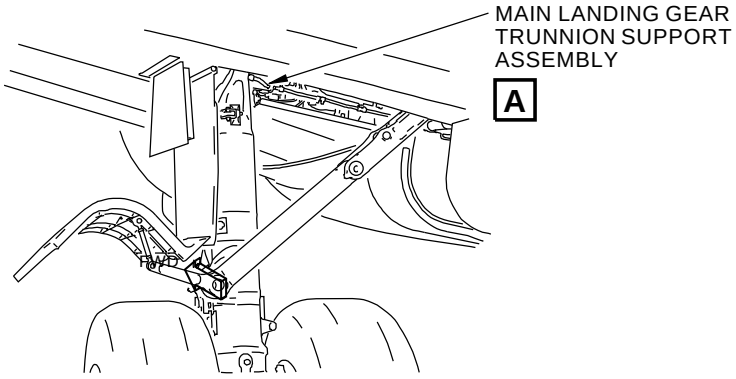

737-700 LEFT MAIN LANDING GEAR (EXAMPLE)

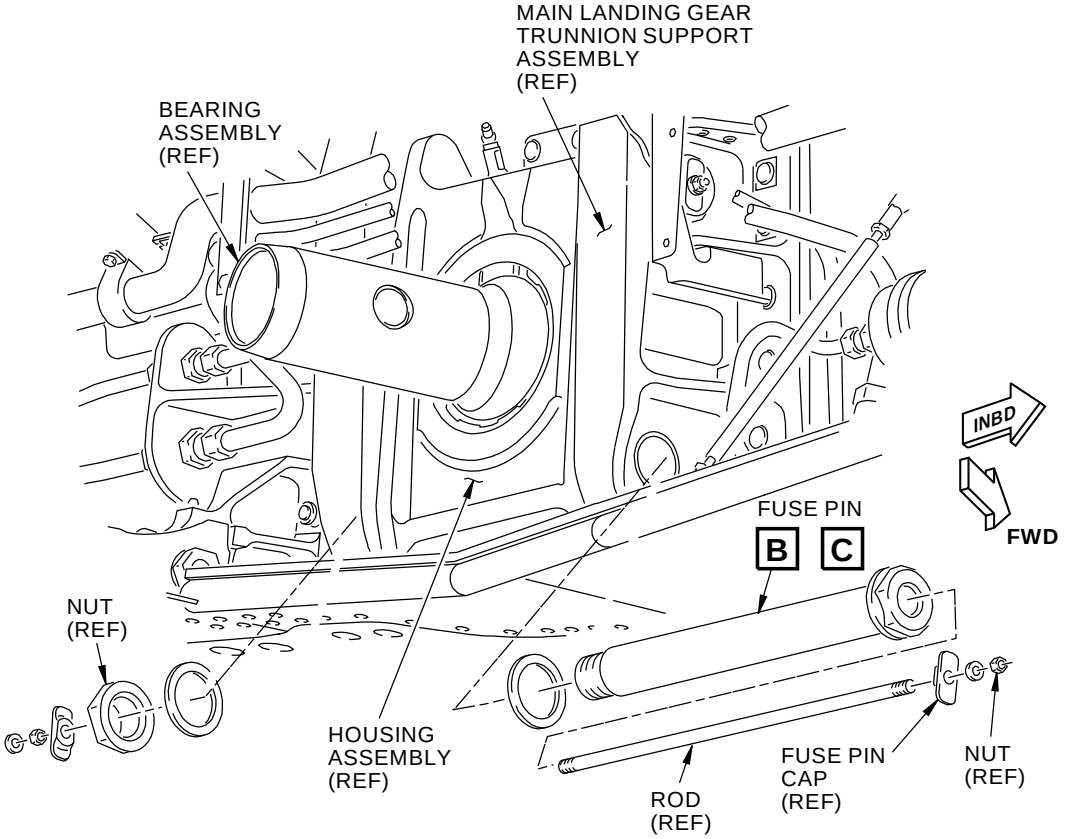

MAIN LANDING GEAR TRUNNION SUPPORT ASSEMBLY

A

H82865 S0006831799_V4

Main Landing Gear Forward Trunnion Support Fuse Pin Puller Equipment
Figure 1 (Sheet 1 of 3)

BOEING PROPRIETARY - Copyright © Unpublished Work - See title page for details

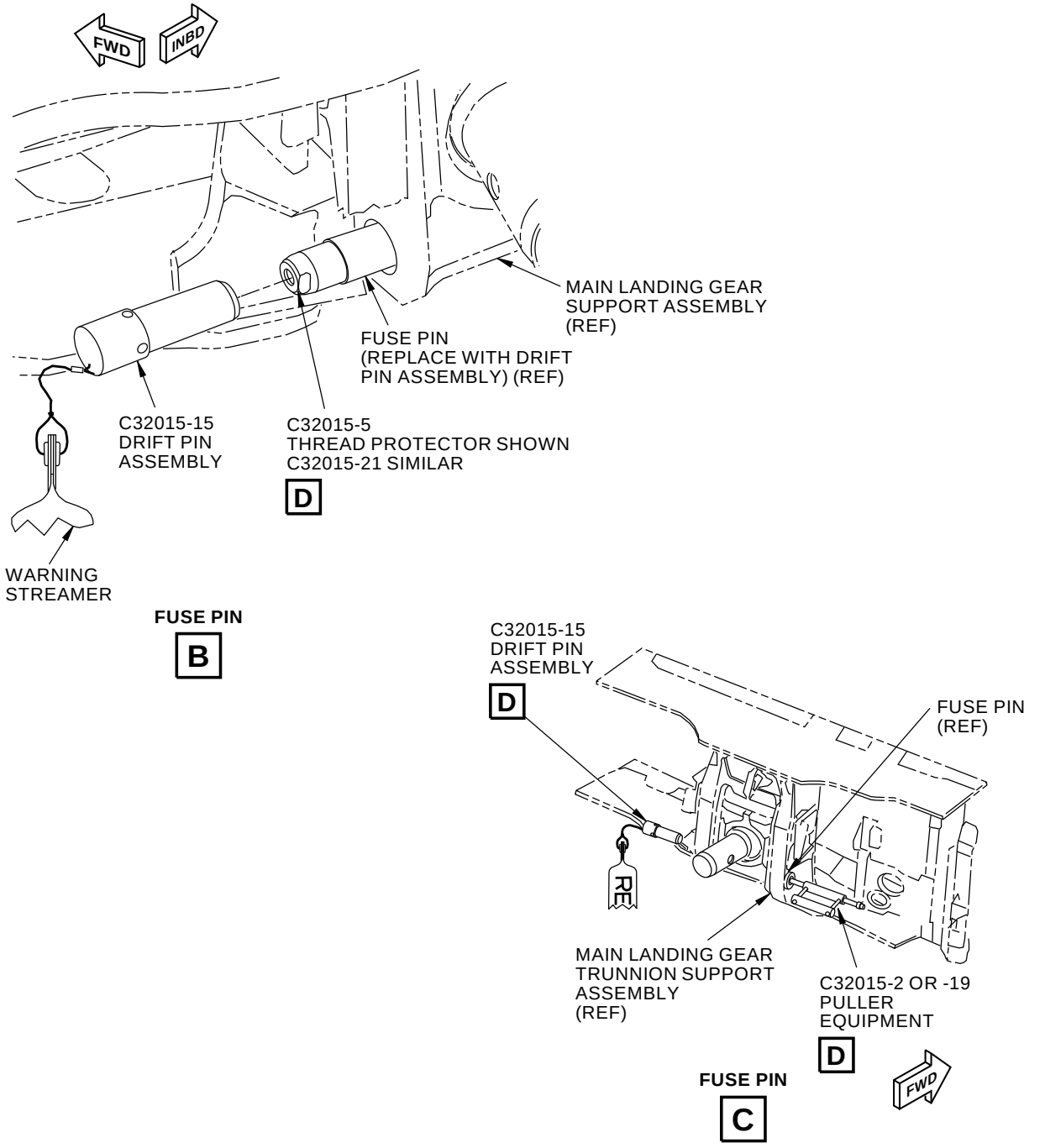

Main Landing Gear Forward Trunnion Support Fuse Pin Puller Equipment
Figure 1 (Sheet 2 of 3)

BOEING PROPRIETARY - Copyright © Unpublished Work - See title page for details

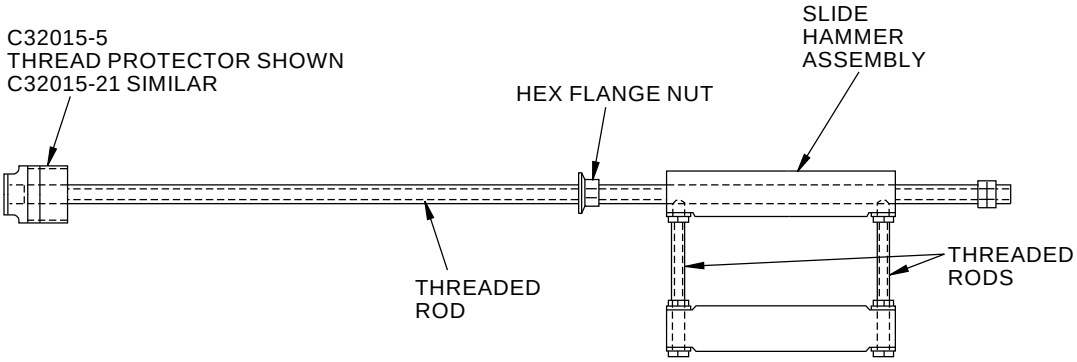

C32015-2 PULLER ASSEMBLY SHOWN
C32015-19 SIMILAR

D

H82923 S0006831801_V6

Main Landing Gear Forward Trunnion Support Fuse Pin Puller Equipment
Figure 1 (Sheet 3 of 3)

BOEING PROPRIETARY - Copyright © Unpublished Work - See title page for details

PART NUMBER: C32031-1, -22

NAME: REMOVAL/INSTALLATION EQUIPMENT - AFT TRUNNION PIN, MAIN LANDING GEAR

AIRPLANE MAINTENANCE: YES

AMM 32-11-00

COMPONENT MAINTENANCE: NO

USAGE & DESCRIPTION: The C32031-1 or -22 (preferred) removal and installation equipment is used on all 737-600 thru -900 airplanes.

C32031 is used to remove or install the main landing gear aft trunnion pin.

Refer to the current C32031 drawing and AMM 32-11-00 for complete usage instructions.

C32031-1 and -22 consist of:

C32031-1		
QUANTITY	**NOMENCLATURE**	**PART NUMBER**
1	PUSH ADAPTER ASSEMBLY	C32031-3
1	SLIDE HAMMER	C32031-4
1	PULL ADAPTER ASSEMBLY	C32031-5
1	PULL NUT	C32031-6*[1]
1	SHAFT ASSEMBLY	C32031-7
1	STORAGE BOX	

*[1] C32031-6 IS STOWED ON C32031-5.

C32031-22		
QUANTITY	**NOMENCLATURE**	**PART NUMBER**
1	PUSH ADAPTER ASSEMBLY	C32031-3
1	SLIDE HAMMER	C32031-4
1	PULL ADAPTER ASSEMBLY	C32031-5
1	PULL NUT	C32031-6*[1]
1	SHAFT ASSEMBLY	C32031-7
1	SHORT SHAFT ASSEMBLY	C32031-23
1	STORAGE BOX	

*[1] C32031-6 IS STOWED ON C32031-5.

WEIGHT: C32031-1 - 15 lbs (7 kg)
C32031-22 - 20 lbs (9 kg)

BOEING PROPRIETARY - Copyright © Unpublished Work - See title page for details

DIMENSIONS: C32031-1 - 3 x 6 x 40 inches (76 x 152 x 1016 mm)
C32031-22 - 3 x 8 x 40 inches (76 x 203 x 1016 mm)

NOTE: C32031-22 replaces C32031-1 for future procurement.

BOEING PROPRIETARY - Copyright © Unpublished Work - See title page for details

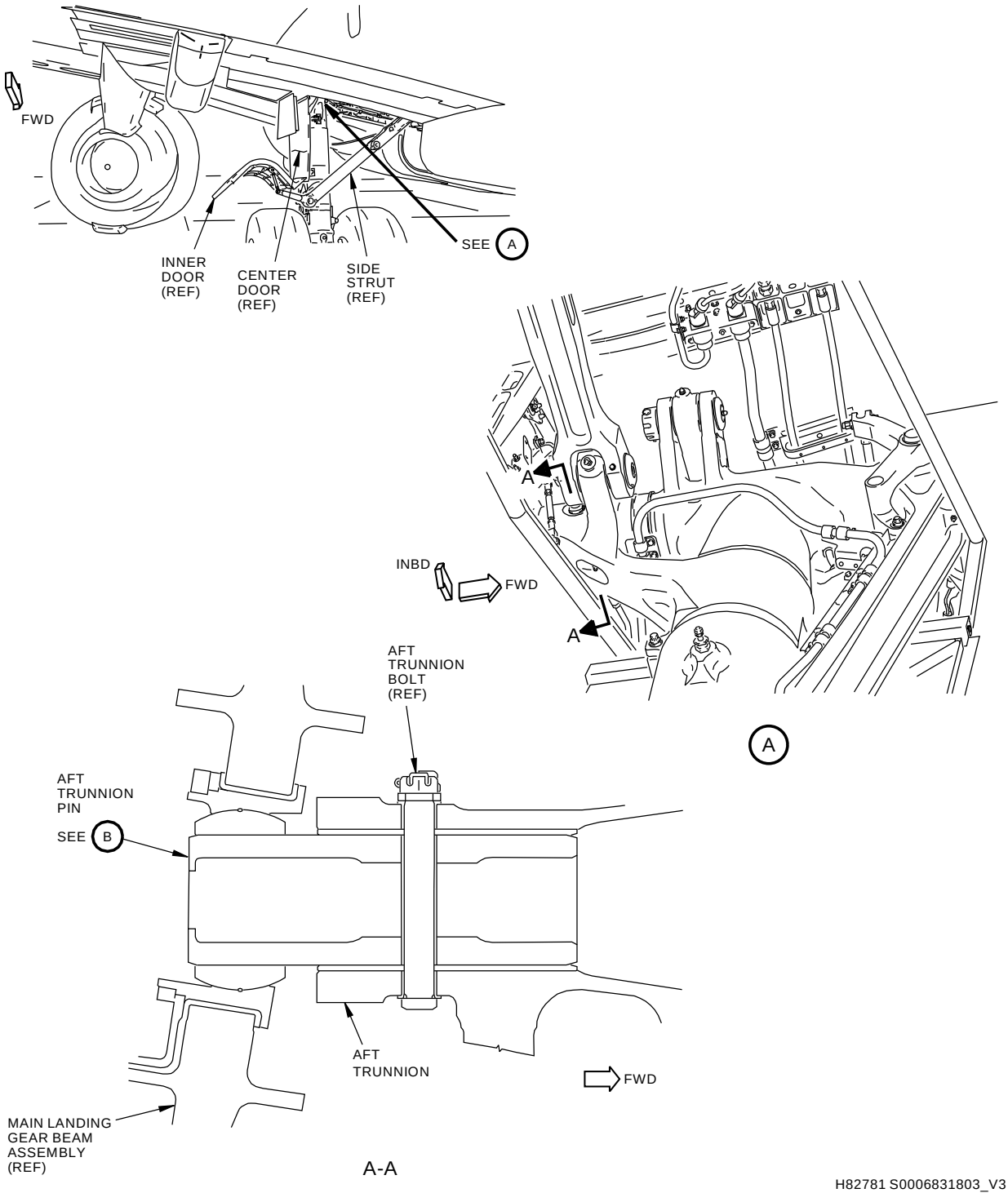

H82781 S0006831803_V3

Main Landing Gear - Aft Trunnion Pin Location
Figure 1

BOEING PROPRIETARY - Copyright © Unpublished Work - See title page for details

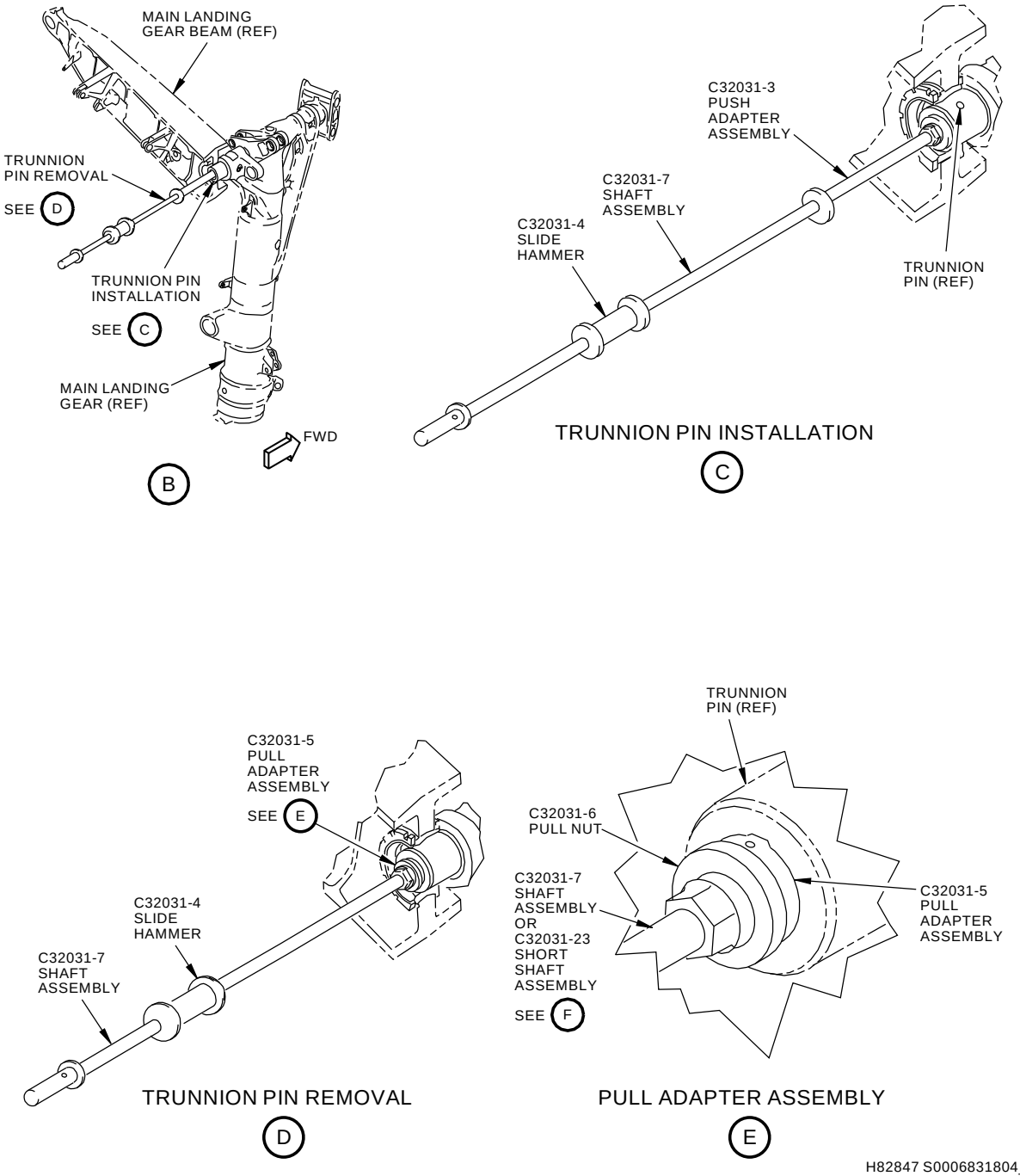

Aft Trunnion Pin Removal/Installation Equipment Components
Figure 2 (Sheet 1 of 2)

BOEING PROPRIETARY - Copyright © Unpublished Work - See title page for details

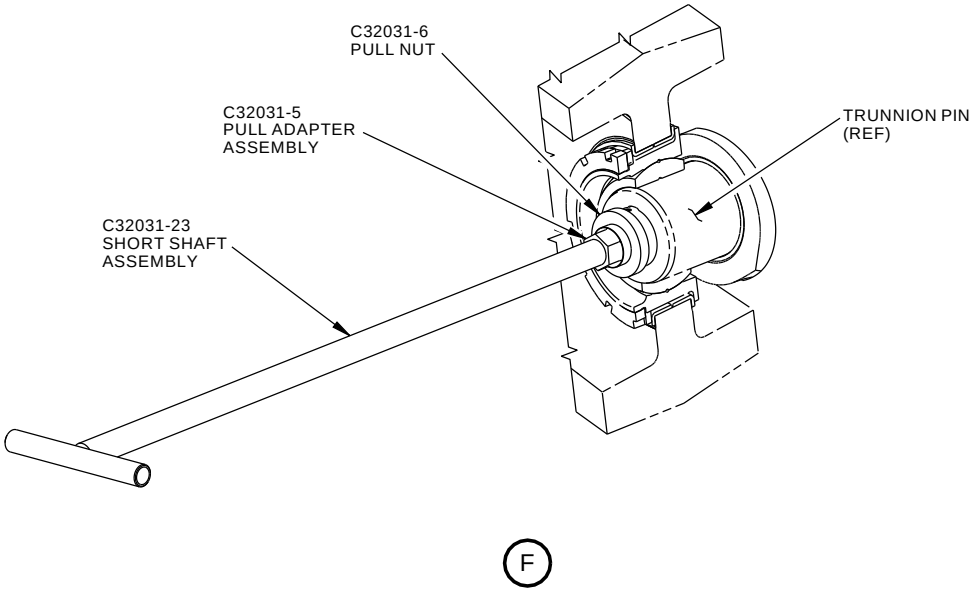

2300291 S0000521782_V1

Aft Trunnion Pin Removal/Installation Equipment Components
Figure 2 (Sheet 2 of 2)

BOEING PROPRIETARY - Copyright © Unpublished Work - See title page for details

PART NUMBER: C32034-9, -227, -273

NAME: REMOVAL/INSTALLATION EQUIPMENT - MAIN LANDING GEAR

AIRPLANE MAINTENANCE: YES

AMM 32-11-00

COMPONENT MAINTENANCE: NO

USAGE & DESCRIPTION: The C32034-227 (option) and C32034-273 (CE qualified, preferred) removal and installation equipments are used on all 737-600 THRU -900 airplanes.

The C32034-9 proof load assembly is required to proof load test the C32034-227 and -273 removal/installation equipments.

C32034-227 and -273 are used for the removal, installation and/or shop handling of the main landing gear. The main gear is installed by first rotating the forward trunnion into the "H"-block on the wing rear spar, followed by installation of the aft trunnion to the main gear beam. C32034-227 and -273 has a feature to prevent over-rotation of the forward trunnion bearing in the outboard direction, preventing bearing damage. C32034-227 and -273 also features wheels for ease of transportation and shop handling.

C32034-273 conforms with Article 3, Paragraph 3 of the Pressure Equipment Directive 97/23/EC.

Refer to the current C32034 drawing and AMM 32-11-00 for complete usage instructions.

C32034-9, -227 and -273 consist of:

C32034-9		
QUANTITY	**NOMENCLATURE**	**PART NUMBER**
1	SECONDARY MACHINED ASSEMBLY	C32034-172
3	SWIVEL HOIST RING	C32034-237

C32034-227		
QUANTITY	**NOMENCLATURE**	**PART NUMBER**
1	TRANSPORTATION SUPPORT ASSEMBLY	C32034-5*[1]
3	LEVER BAR ASSEMBLY	C32034-6*[1]
2	TIRE SUPPORT ASSEMBLY	C32034-7*[1]
2	TIRE STRAP ASSEMBLY	C32034-8*[1]
1	SIDE STRUT ATTACH ASSEMBLY	C32034-14*[2]
1	MAIN LANDING GEAR SUPPORT ASSEMBLY	C32034-212
1	DOLLY ASSEMBLY	C32034-213
1	PRY LEVER BAR	C32034-217*[1]
1	PROTECTOR ASSEMBLY	C32034-228

BOEING PROPRIETARY - Copyright © Unpublished Work - See title page for details

(Continued)

C32034-227		
QUANTITY	NOMENCLATURE	PART NUMBER
1	PROTECTOR ASSEMBLY	C32034-235*[3]
1	OUTER CYLINDER STRAP ASSEMBLY	C32034-238
1	STORAGE BOX	

*[1] STOWED ON C32034-213.
*[2] PART OF C32034-212.
*[3] C32034-235 IS ONLY USED ON THE 737-900ER.

C32034-273		
QUANTITY	NOMENCLATURE	PART NUMBER
1	TRANSPORTATION SUPPORT ASSEMBLY	C32034-5*[1]
3	LEVER BAR ASSEMBLY	C32034-6*[1]
2	TIRE SUPPORT ASSEMBLY	C32034-7*[1]
2	TIRE STRAP ASSEMBLY	C32034-8*[1]
1	SIDE STRUT ATTACH ASSEMBLY	C32034-14*[2]
3	LOCK WASHER	C32034-41*[1]
3	WASHER	C32034-43*[1]
3	HEX NUT	C32034-46*[1]
1	UPPER WINCH ASSEMBLY	C32034-309
1	POST ASSEMBLY	C32034-310
1	MAIN LANDING GEAR SUPPORT ASSEMBLY	C32034-274
1	DOLLY ASSEMBLY	C32034-275
1	PRY LEVER BAR	C32034-217*[1]
1	PROTECTOR ASSEMBLY	C32034-228
1	PROTECTOR ASSEMBLY	C32034-235*[3]
1	OUTER CYLINDER STRAP ASSEMBLY	C32034-238
1	UPPER WINCH STRAP	C32034-326
3	SCREW, LONG	C32034-327*[1]
4	SCREW, SHORT	C32034-332*[1]
1	STORAGE BOX	

*[1] STOWED ON C32034-275.
*[2] PART OF C32034-274.
*[3] C32034-235 IS ONLY USED ON THE 737-900ER.

WEIGHT: C32034-9 - 45 lbs (20 kg)
C32034-227 - 1000 lbs (454 kg)
C32034-273 - 1035 lbs (470 kg)

BOEING PROPRIETARY - Copyright © Unpublished Work - See title page for details

DIMENSIONS: C32034-9 - 10 x 14 x 38 inches (254 x 356 x 965 mm)
C32034-227 - 58 x 72 x 93 inches (1473 x 1829 x 2362 mm)
C32034-273 - 88 x 98 x 108 inches (2235 x 2489 x 2743 mm)

NOTE: C32034-227 supersedes C32034-211.
C32034-273 replaces C32034-227 for future procurement.

BOEING PROPRIETARY - Copyright © Unpublished Work - See title page for details

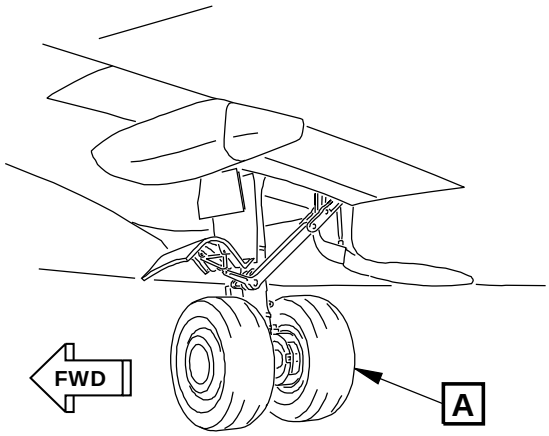

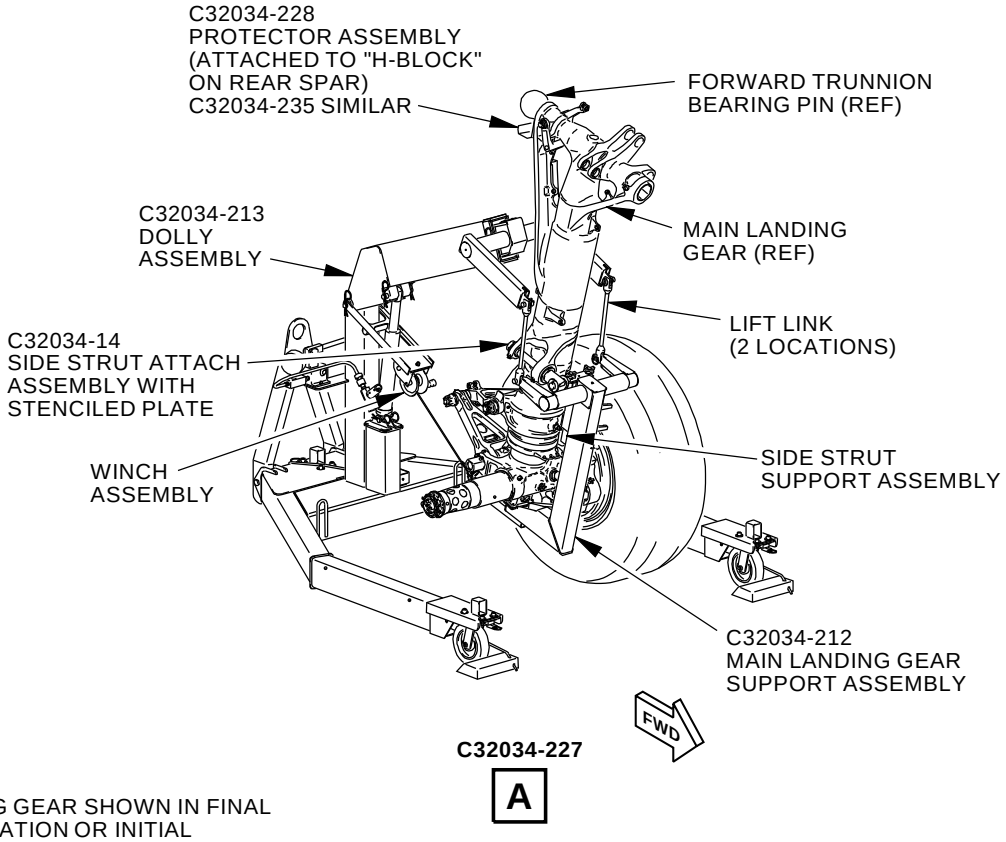

NOTE:

LANDING GEAR SHOWN IN FINAL INSTALLATION OR INITIAL REMOVAL POSITION (WHEEL/TIRE/BRAKE REMOVED FOR CLARITY).

H84468 S0006831806_V5

Installation/Removal Fixture Location and Components
Figure 1

BOEING PROPRIETARY - Copyright © Unpublished Work - See title page for details

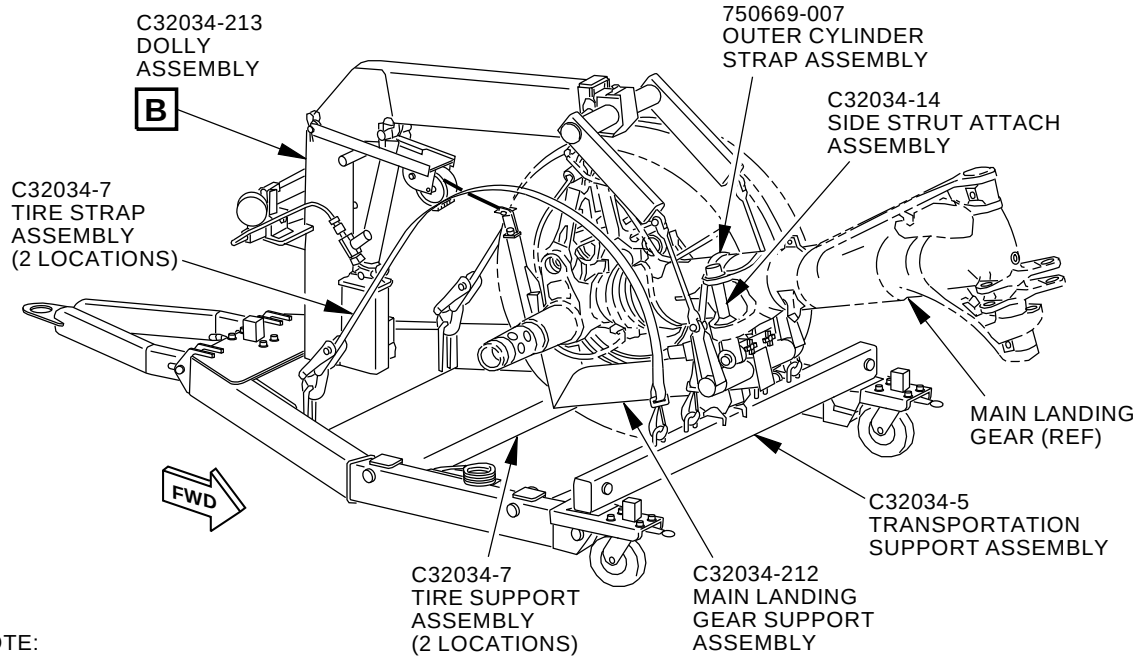

NOTE:

LANDING GEAR SHOWN IN LAYDOWN POSITION FOR SHOP HANDLING (WHEEL/TIRE/BRAKE REMOVED FOR CLARITY).

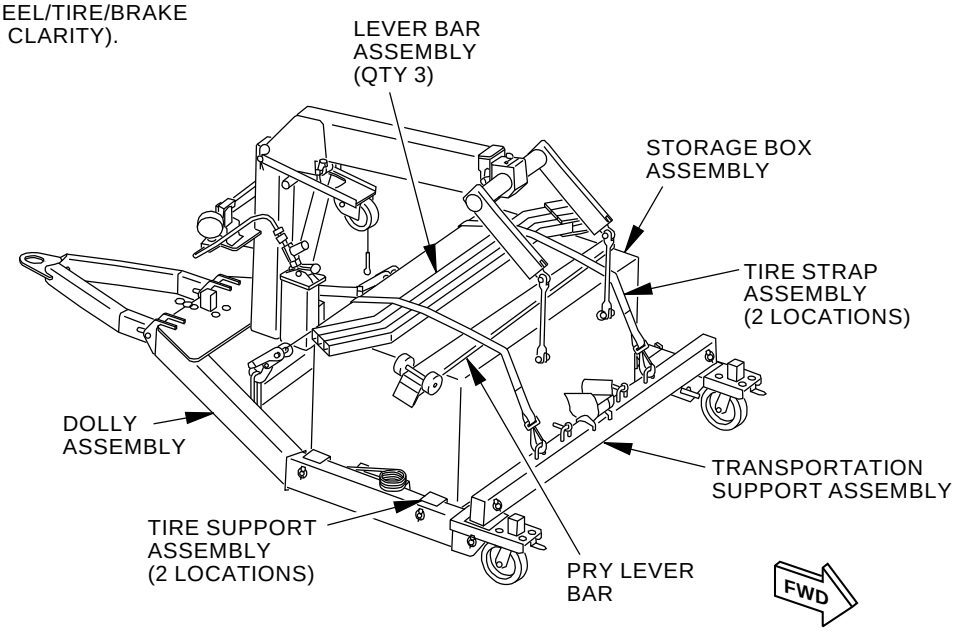

EQUIPMENT SHOWN IN SHIPPING/STORAGE CONFIGURATION

H84592 S0006831807_V4

Installation/Removal Fixture Components
Figure 2

BOEING PROPRIETARY - Copyright © Unpublished Work - See title page for details

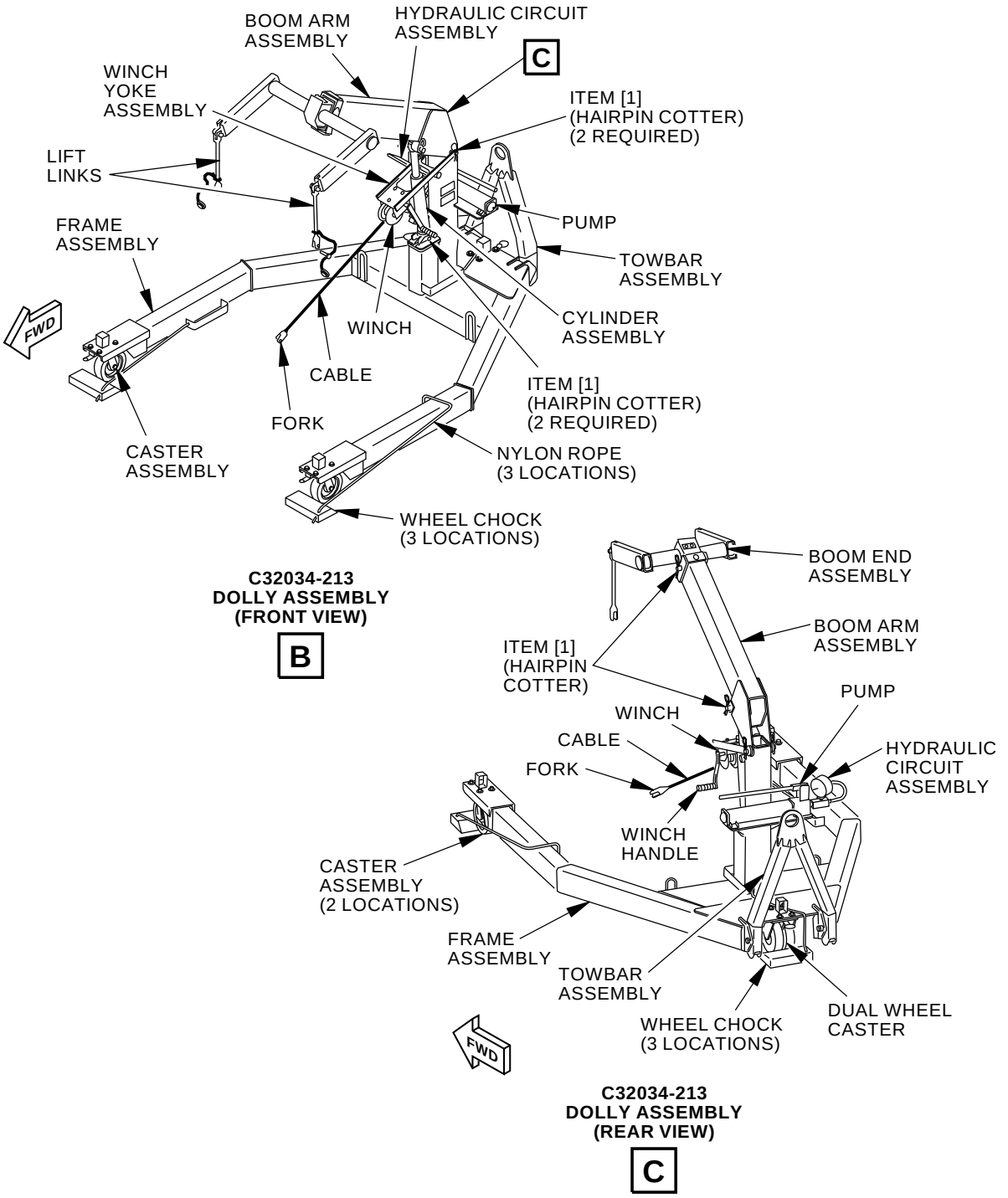

H84822 S0006831808_V5

Installation/Removal Fixture Components
Figure 3

BOEING PROPRIETARY - Copyright © Unpublished Work - See title page for details

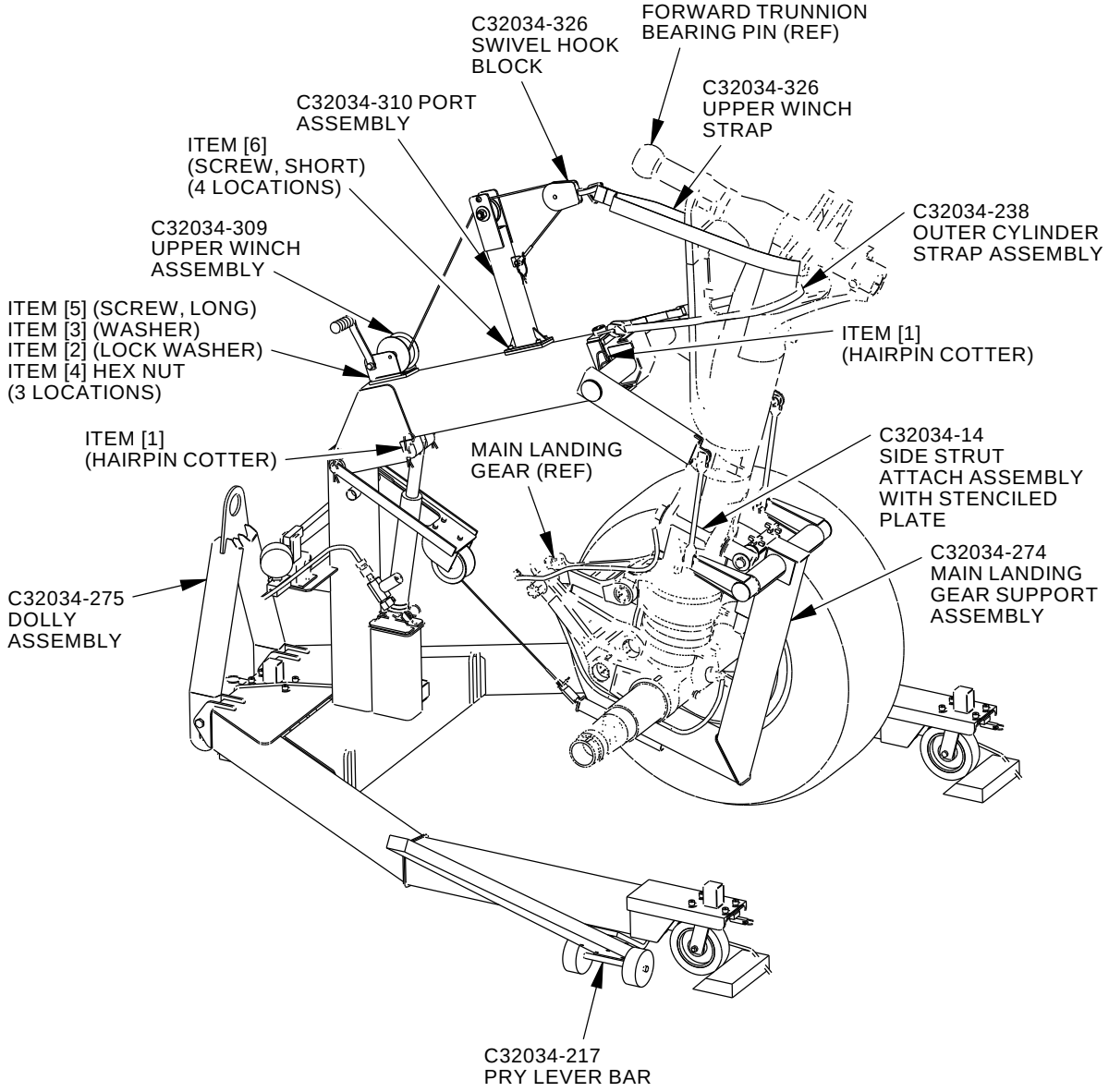

C32034-273

D

NOTE:

LANDING GEAR SHOWN IN DISCONNECTING/CONNECTING POSITION FROM/TO FORWARD TRUNNION PIN (WHEEL/TIRE/BRAKE REMOVED FOR CLARITY).

2475251 S0000580227_V1

Installation/Removal Fixture Components
Figure 4

BOEING PROPRIETARY - Copyright © Unpublished Work - See title page for details

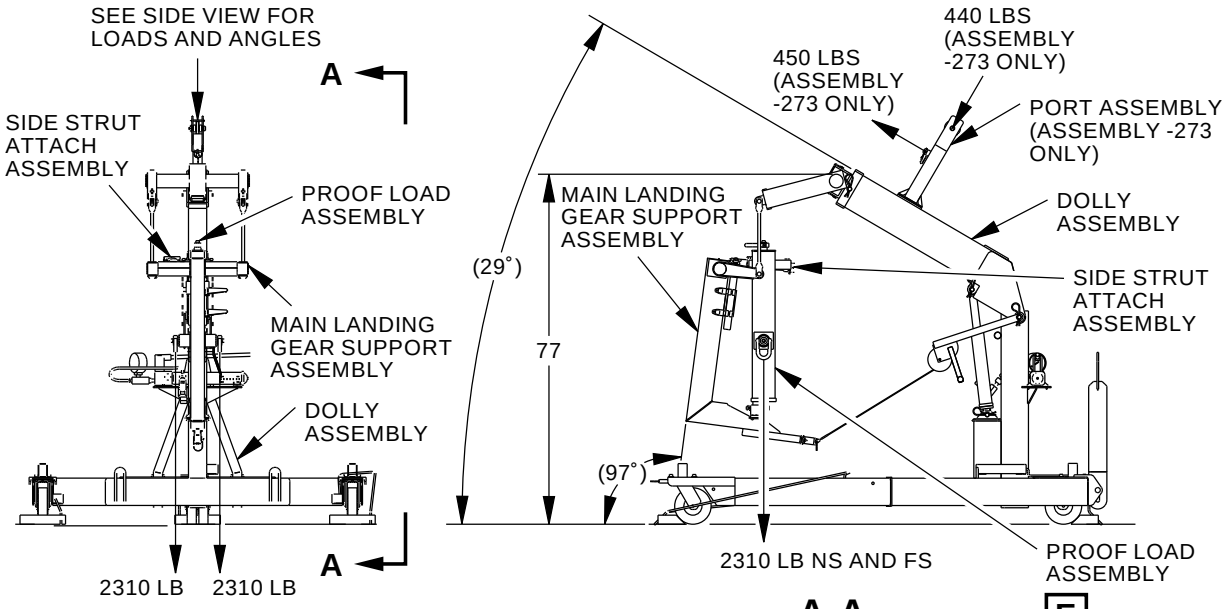

TYPICAL PROOF LOAD DIAGRAM

A-A

E

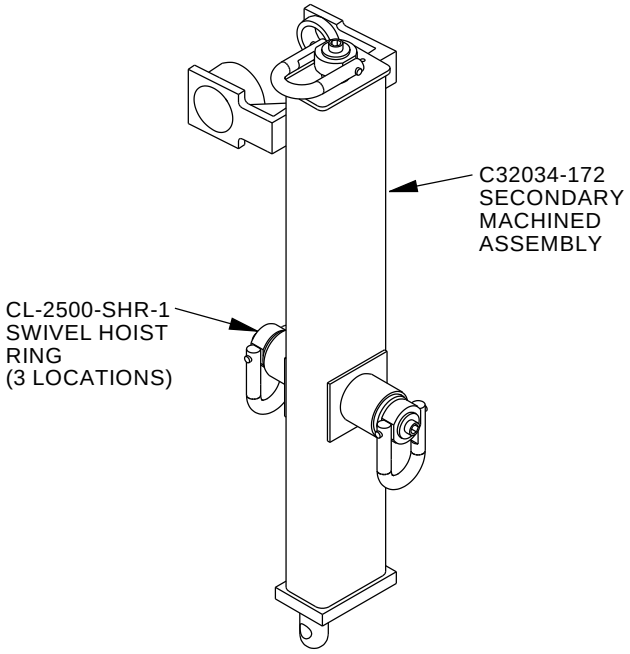

C32034-9
PROOF LOAD ASSEMBLY

E

1559533 S0000288082_V2

Installation/Removal Fixture Components and Proof Load Assembly
Figure 5

BOEING PROPRIETARY - Copyright © Unpublished Work - See title page for details

REPAIRABLE/REPLACEABLE PARTS			
ITEM NO.	PART NO.	NOMENCLATURE	VENDOR CODE
[1]	C32034-255	HAIRPIN COTTER	96652
[2]	C32034-41	LOCK WASHER	
[3]	C32034-43	WASHER	
[4]	C32034-46	HEX NUT	
[5]	C32034-327	SCREW, LONG	
[6]	C32034-332	SCREW, SHORT	

BOEING PROPRIETARY - Copyright © Unpublished Work - See title page for details

PART NUMBER: C32017-52, -53

NAME: REPLACEMENT EQUIPMENT - LOWER BEARING SEALS, MAIN LANDING GEAR

AIRPLANE MAINTENANCE: YES

AMM 32-11-21

COMPONENT MAINTENANCE: YES

CMM 32-11-12

USAGE & DESCRIPTION: C32017-52 (option) or C32017-53 (preferred) replacement equipment is used on all 737 airplanes except 737-100 thru -500 airplanes.

C32017 is used to remove or install the main landing gear lower bearing seal assemblies.

Figure 1 illustrates the tools required to compress the upper bearing carrier during the mating of the outer cylinder to the inner cylinder. The C32017-60 strap assembly is used to hold the C32017-10 upper sleeve assembly in position inside the outer cylinder.

Figure 2 illustrates the C32017-8 thread protector retainer assembly holding the C32017-9 thread protectors in position when installing the bearing carrier. The C32017-9 thread protectors are used to protect the seals from threads inside the outer cylinder. The C32017-60 strap assembly is used to hold the C32017-8 thread protector retainer assembly in position inside the outer cylinder.

Figure 3 illustrates the C32017-7 dynamic seal clamp assembly guiding the C32017-23 dynamic seal plunger during this dynamic seal installation. The C32017-60 strap assembly is used to push the dynamic seal for installation in its groove in the bearing carrier. The C32017-8 thread protector retainer assembly holds the C32017-9 thread protectors in position when installing the bearing carrier.

Figure 4 illustrates the C32017-4 spacer assembly holding the scraper ring in its groove while lowering the gland nut. The C32017-5 carrier puller assembly is used to pull the lower bearing carrier from the inside of the outer cylinder. The C32017-60 strap assembly is used to hold the C32017-8 thread protector retainer assembly in position inside the outer cylinder. The C32017-8 thread protector retainer assembly holds the C32017-9 thread protectors in position when installing the bearing carrier. The C32017-27 carrier puller screws are used to hold the C32017-5 to the lower bearing carrier.

Figure 5 illustrates the C32017-6 scraper ring guide assembly guiding the scraper ring as the C32017-21 scraper ring plungers push the scraper ring into its groove. The C32017-21 scraper ring plungers are used to push the scraper ring back in its groove in the lower bearing carrier. The C32017-60 strap assembly is used to push the dynamic seal for installation in its groove in the bearing carrier. The C32017-8 thread protector retainer assembly holds the C32017-9 thread protectors in position when installing the bearing carrier.

BOEING PROPRIETARY - Copyright © Unpublished Work - See title page for details

Figure 6 illustrates the C32017-54 dynamic seal sleeve being used to prevent the dynamic seal from coming out of its groove during the installation of the lower bearing carrier on the inner cylinder.

Figure 7 illustrates the C32017-33 excluder plunger being used to push the excluder into its groove during installation of the lower bearing carrier. The C32017-34 excluder guide is used to guide the excluder during installation on the lower bearing carrier.

Figure 8 illustrates the C32017-30 ram assembly being used to push the lower bearing carrier during installation on the inner cylinder.

Figure 9 illustrates the C32017-45, -46 and -47 being used to assist during lower bearing carrier installation on the inner cylinder. The C32017-45 seal retainer is placed on top of the lower bearing carrier then the C32017-46 retainer pins are installed on the C32017-45. C32017-47 O-ring seal is then installed to hold the C32017-46 retainer pins in position.

Refer to AMM 32-11-21, CMM 32-11-12 and the current C32017 drawing for complete usage instructions.

C32017-52 and -53 consist of:

C32017-52		
QUANTITY	**NOMENCLATURE**	**PART NUMBER**
1	SPACER ASSEMBLY	C32017-4
1	CARRIER PULLER ASSEMBLY	C32017-5
1	SCRAPER RING GUIDE ASSEMBLY	C32017-6
1	DYNAMIC SEAL CLAMP ASSEMBLY	C32017-7
1	THREAD PROTECTOR RETAINER ASSEMBLY	C32017-8
2	THREAD PROTECTOR	C32017-9
2	UPPER SLEEVE ASSEMBLY	C32017-10
2	SCRAPER RING PLUNGER	C32017-21
2	DYNAMIC SEAL PLUNGER	C32017-23
3	CARRIER PULLER SCREW	C32017-27
1	DYNAMIC SEAL SLEEVE	C32017-54
1	RAM ASSEMBLY	C32017-30
1	EXCLUDER PLUNGER	C32017-33
1	EXCLUDER GUIDE	C32017-34
2	STRAP ASSEMBLY	C32017-60
1	STORAGE BOX	

C32017-53		
QUANTITY	**NOMENCLATURE**	**PART NUMBER**
1	SPACER ASSEMBLY	C32017-4
1	CARRIER PULLER ASSEMBLY	C32017-5
1	SCRAPER RING GUIDE ASSEMBLY	C32017-6
1	DYNAMIC SEAL CLAMP ASSEMBLY	C32017-7

BOEING PROPRIETARY - Copyright © Unpublished Work - See title page for details

(Continued)

C32017-53		
QUANTITY	NOMENCLATURE	PART NUMBER
1	THREAD PROTECTOR RETAINER ASSEMBLY	C32017-8
2	THREAD PROTECTOR	C32017-9
2	UPPER SLEEVE ASSEMBLY	C32017-10
2	SCRAPER RING PLUNGER	C32017-21
2	DYNAMIC SEAL PLUNGER	C32017-23
3	CARRIER PULLER SCREW	C32017-27
1	DYNAMIC SEAL SLEEVE	C32017-54
1	RAM ASSEMBLY	C32017-30
1	EXCLUDER PLUNGER	C32017-33
1	EXCLUDER GUIDE	C32017-34
1	SEAL RETAINER	C32017-45
3	RETAINER PIN	C32017-46
1	O-RING ASSEMBLY	C32017-47
2	STRAP ASSEMBLY	C32017-60
1	STORAGE BOX	

WEIGHT: C32017-52 - 36 lbs (16 kg)
C32017-53 - 39 lbs (18 kg)

DIMENSIONS: C32017-52 or -53 - 6 x 32 x 36 inches (152 x 813 x 914 mm)

NOTE: C32017-52 supersedes C32017-1.
C32017-53 supersedes C32017-43.
C32017-53 replaces C32017-52 for future procurement.

BOEING PROPRIETARY - Copyright © Unpublished Work - See title page for details

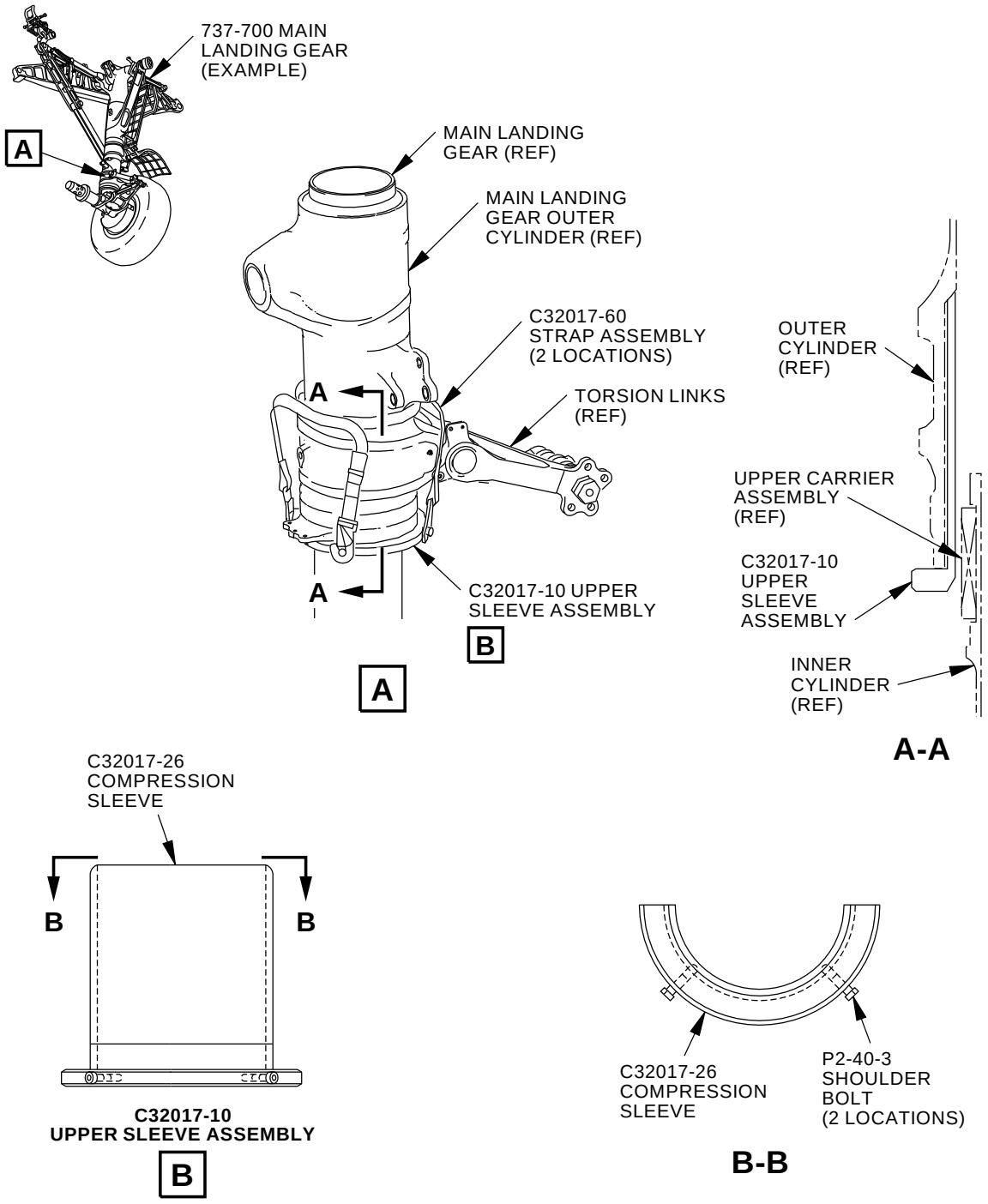

H95686 S0006831811_V5

Mating of Outer to Inner Cylinder
Figure 1

BOEING PROPRIETARY - Copyright © Unpublished Work - See title page for details

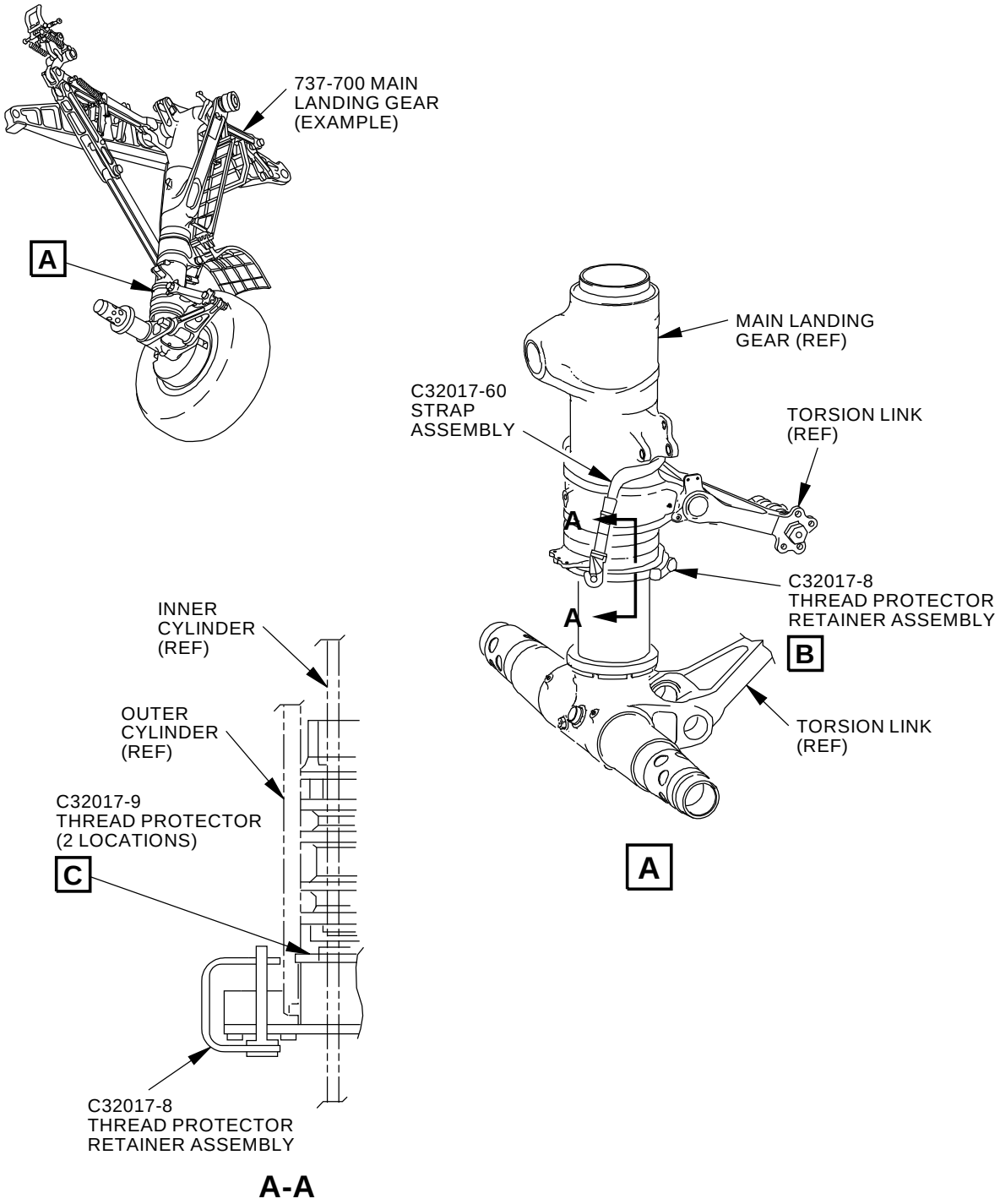

H95763 S0006831812_V5

Installing the Bearing Carrier
Figure 2 (Sheet 1 of 2)

BOEING PROPRIETARY - Copyright © Unpublished Work - See title page for details

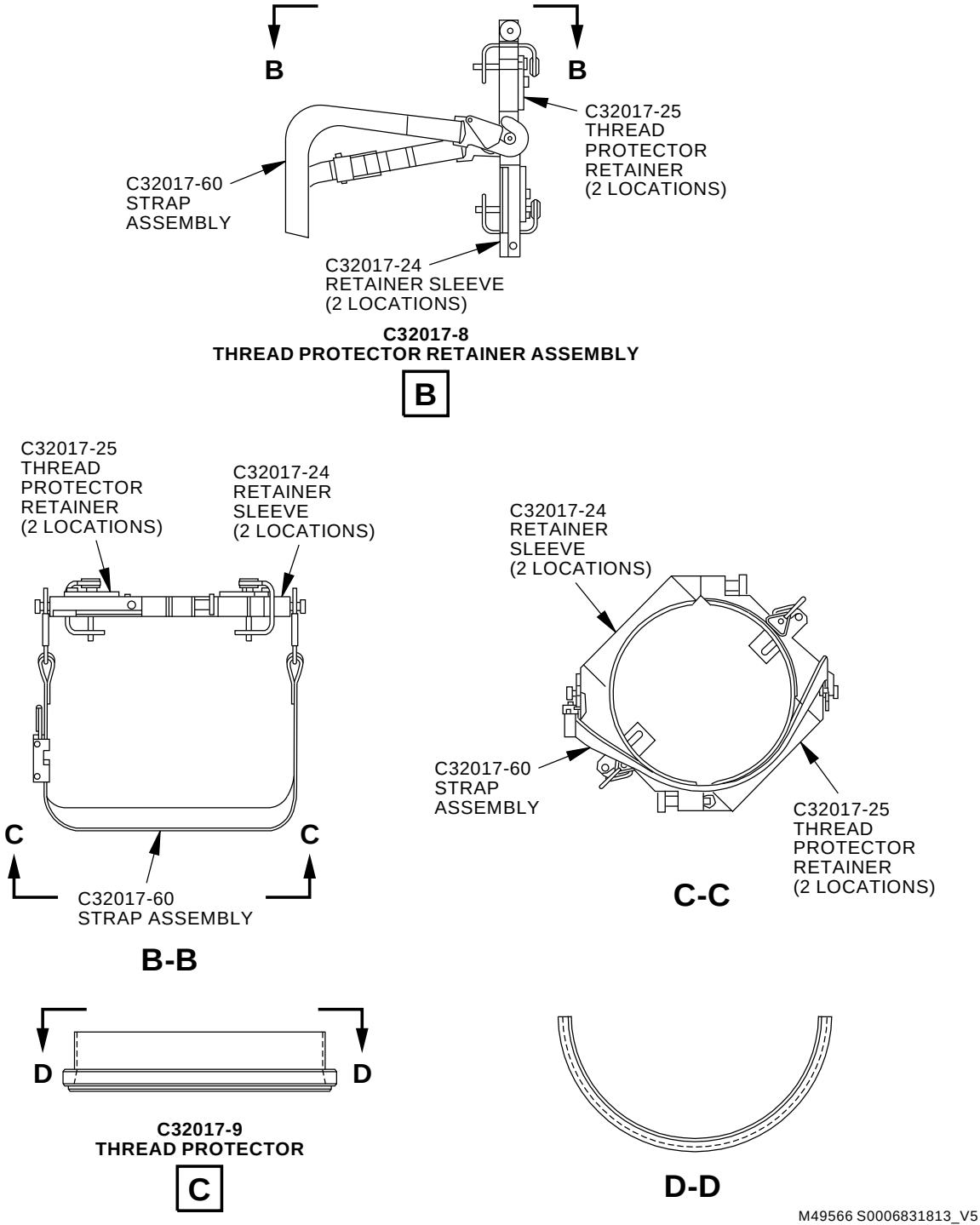

Installing the Bearing Carrier
Figure 2 (Sheet 2 of 2)

BOEING PROPRIETARY - Copyright © Unpublished Work - See title page for details

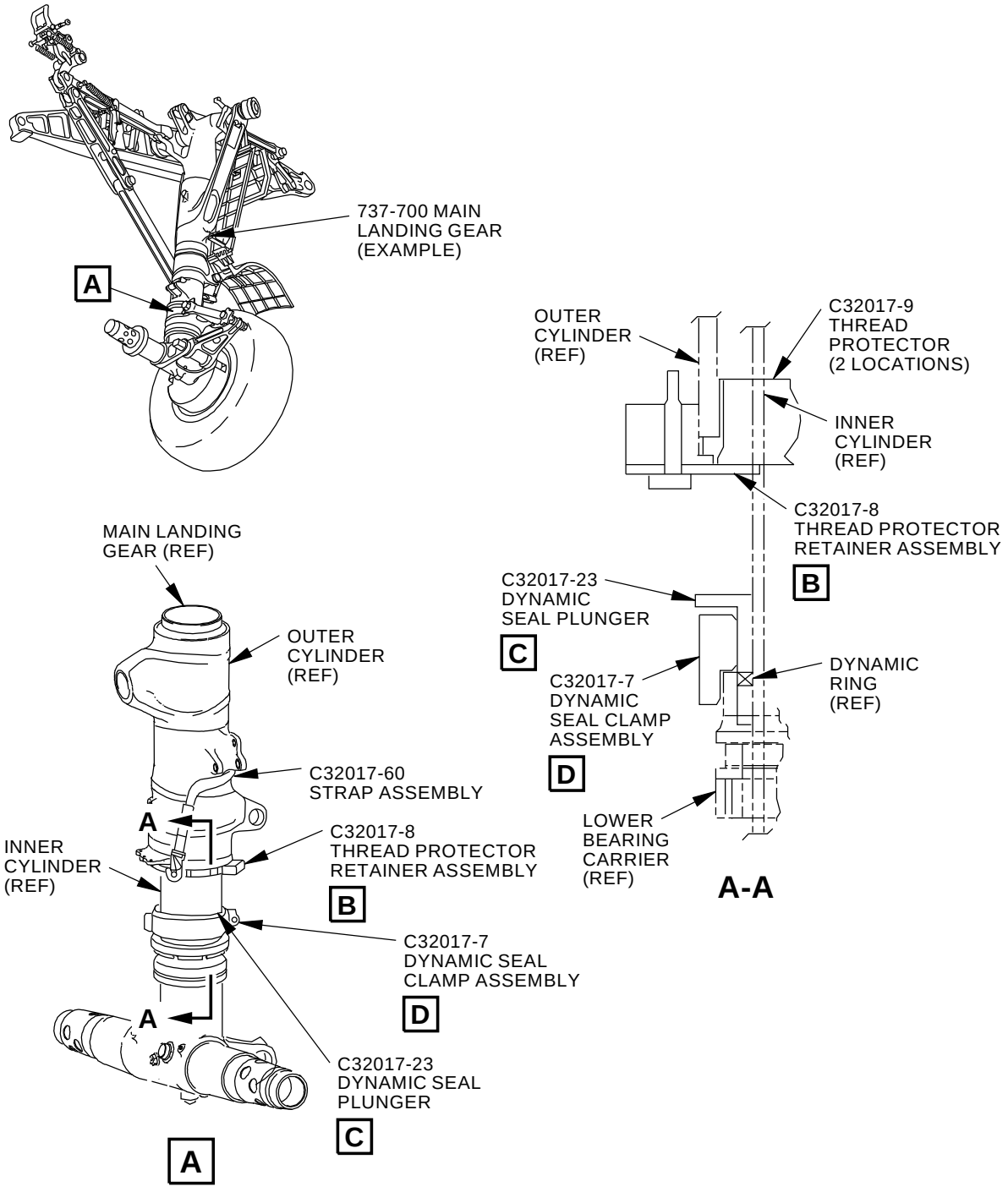

H95782 S0006831814_V5

Dynamic Seal Installation
Figure 3 (Sheet 1 of 2)

BOEING PROPRIETARY - Copyright © Unpublished Work - See title page for details

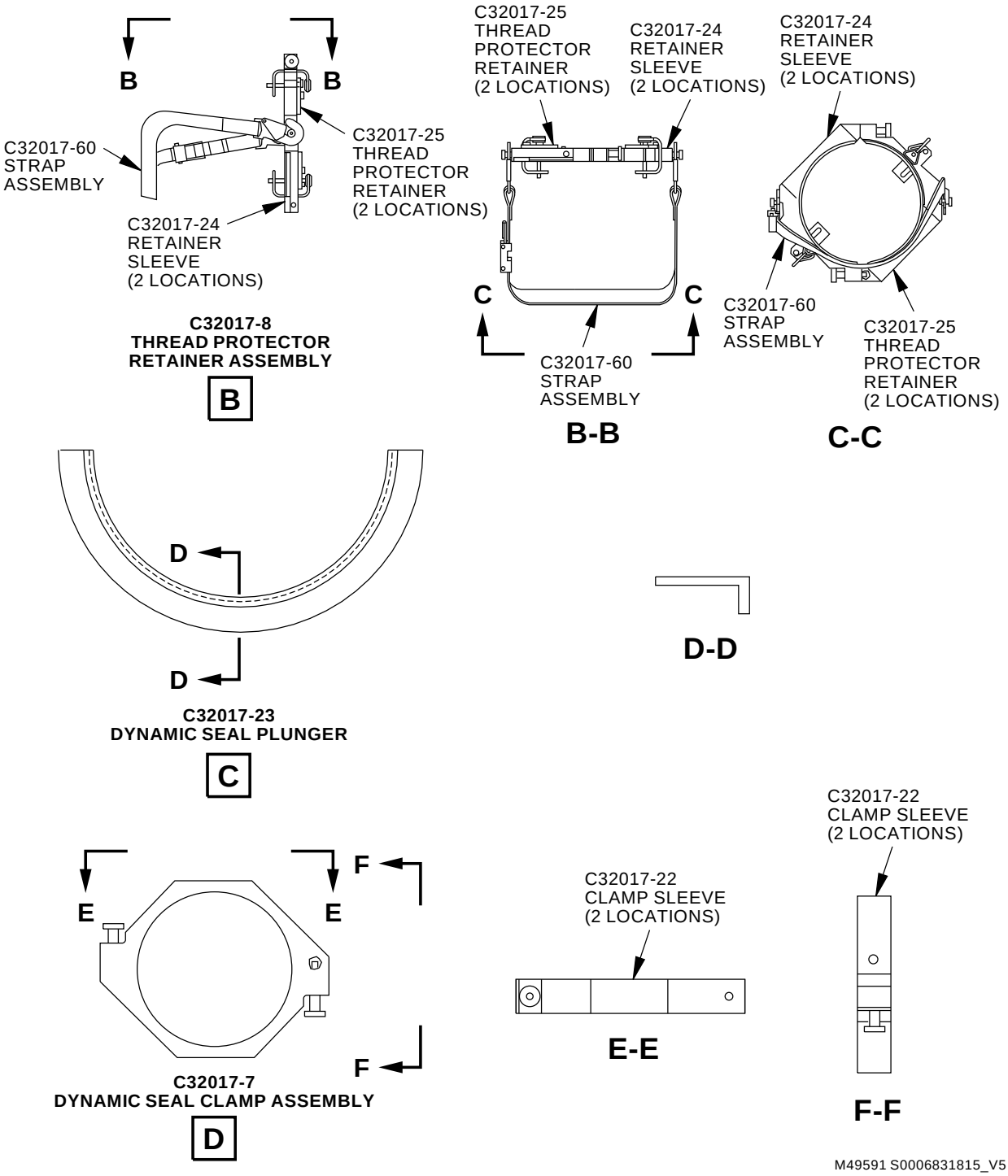

Dynamic Seal Installation
Figure 3 (Sheet 2 of 2)

BOEING PROPRIETARY - Copyright © Unpublished Work - See title page for details

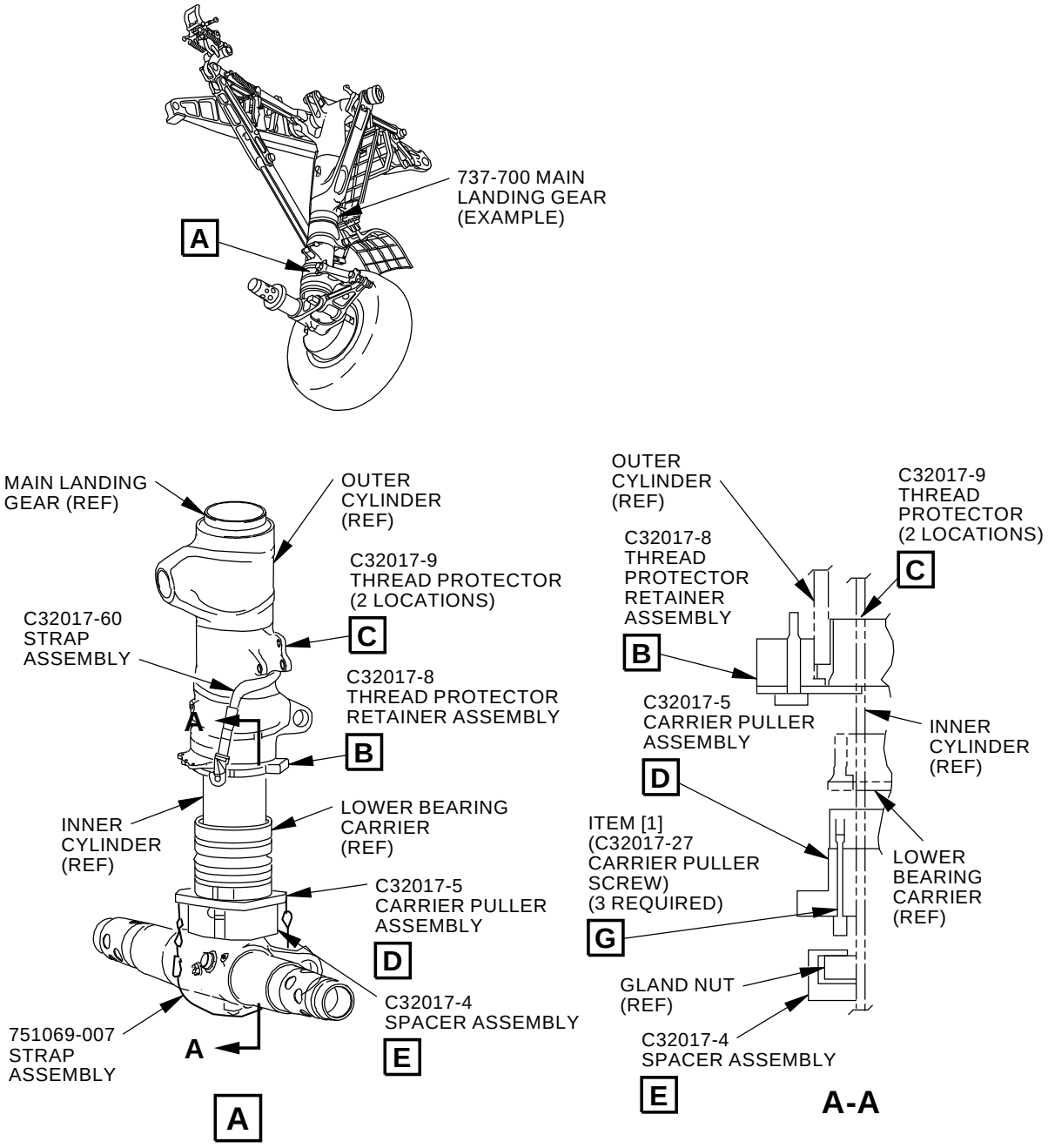

H95797 S0006831816_V5

Lowering the Gland Nut
Figure 4 (Sheet 1 of 3)

BOEING PROPRIETARY - Copyright © Unpublished Work - See title page for details

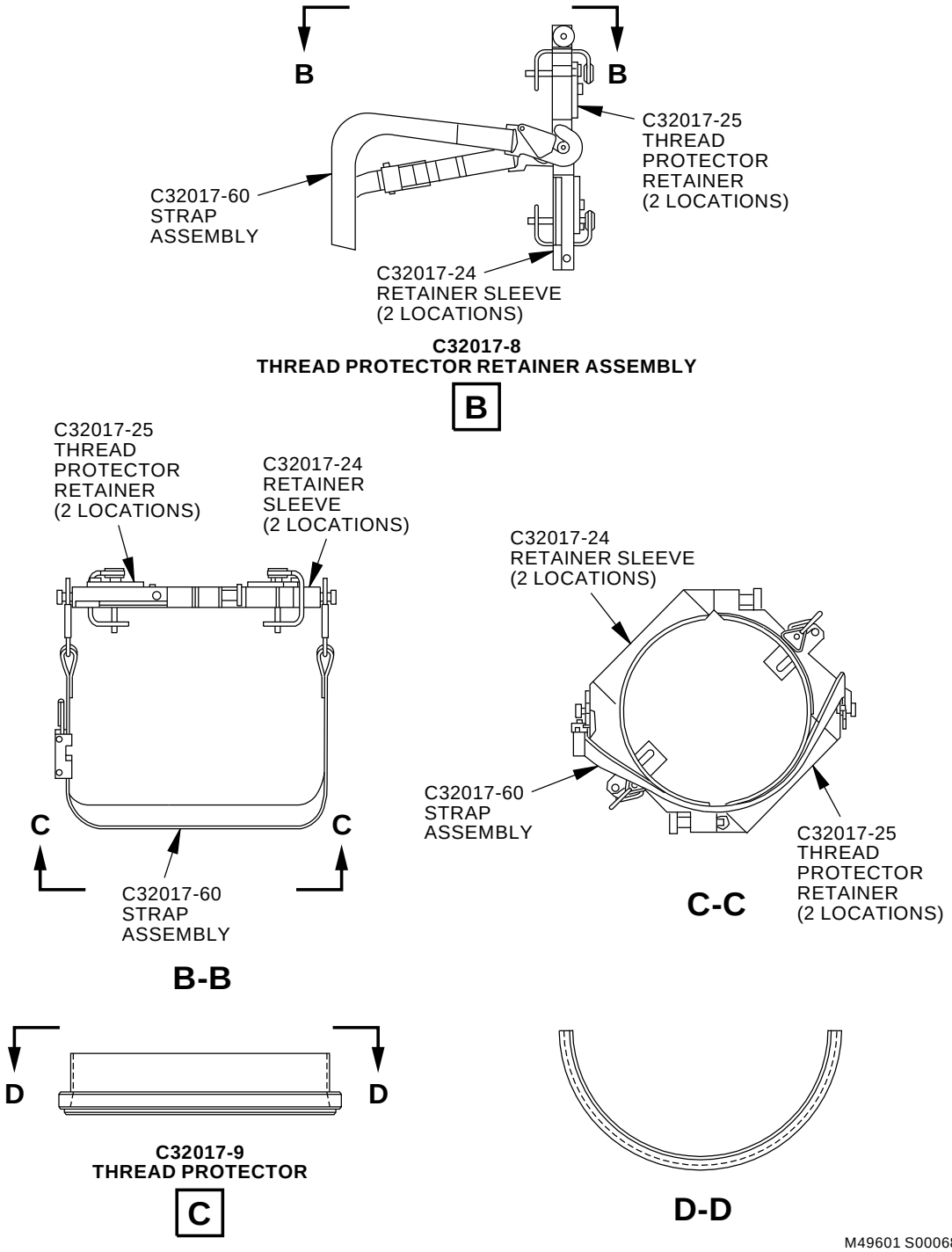

Lowering the Gland Nut
Figure 4 (Sheet 2 of 3)

BOEING PROPRIETARY - Copyright © Unpublished Work - See title page for details

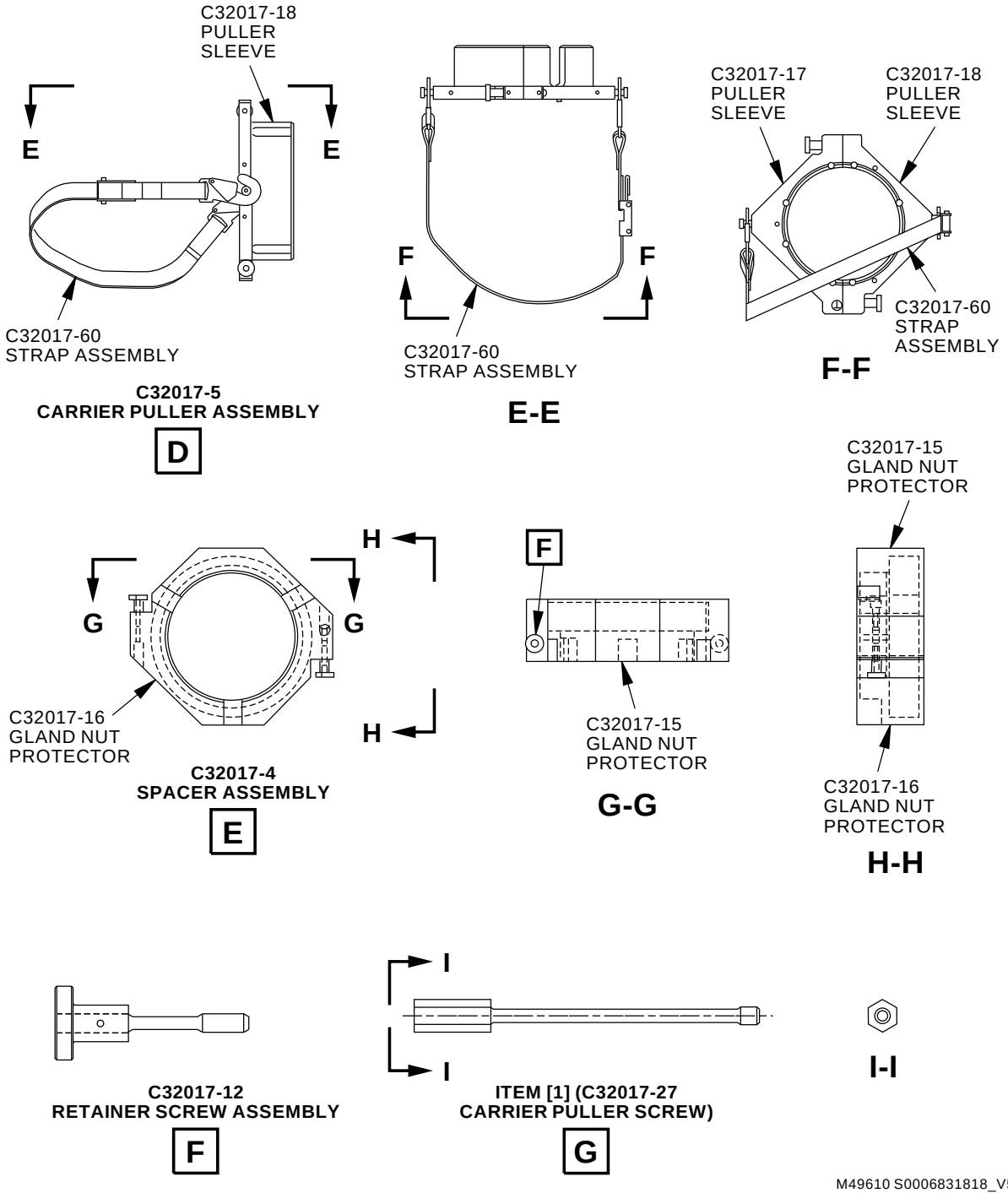

Lowering the Gland Nut
Figure 4 (Sheet 3 of 3)

BOEING PROPRIETARY - Copyright © Unpublished Work - See title page for details

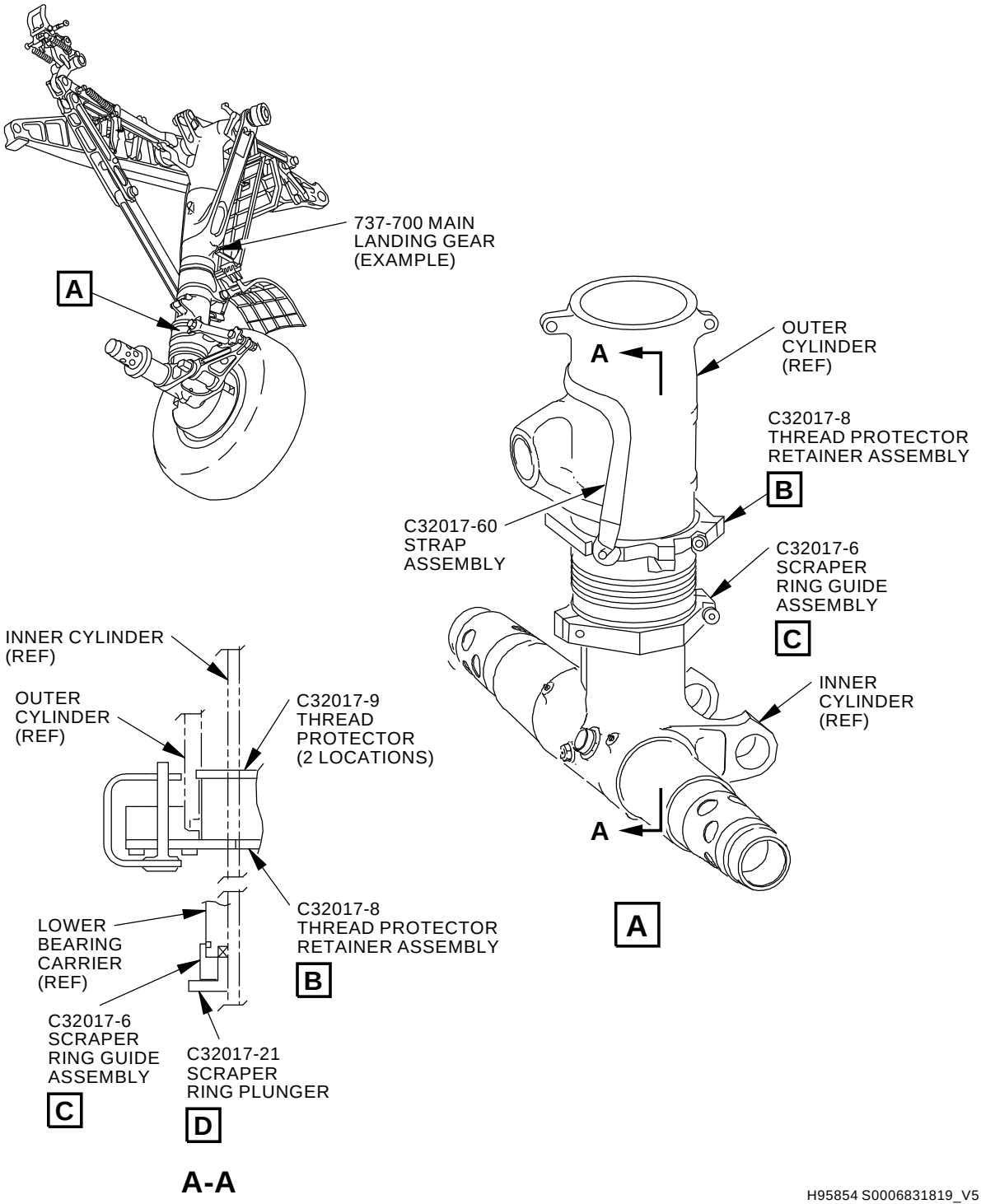

H95854 S0006831819_V5

Scraper Ring Installation
Figure 5 (Sheet 1 of 2)

BOEING PROPRIETARY - Copyright © Unpublished Work - See title page for details

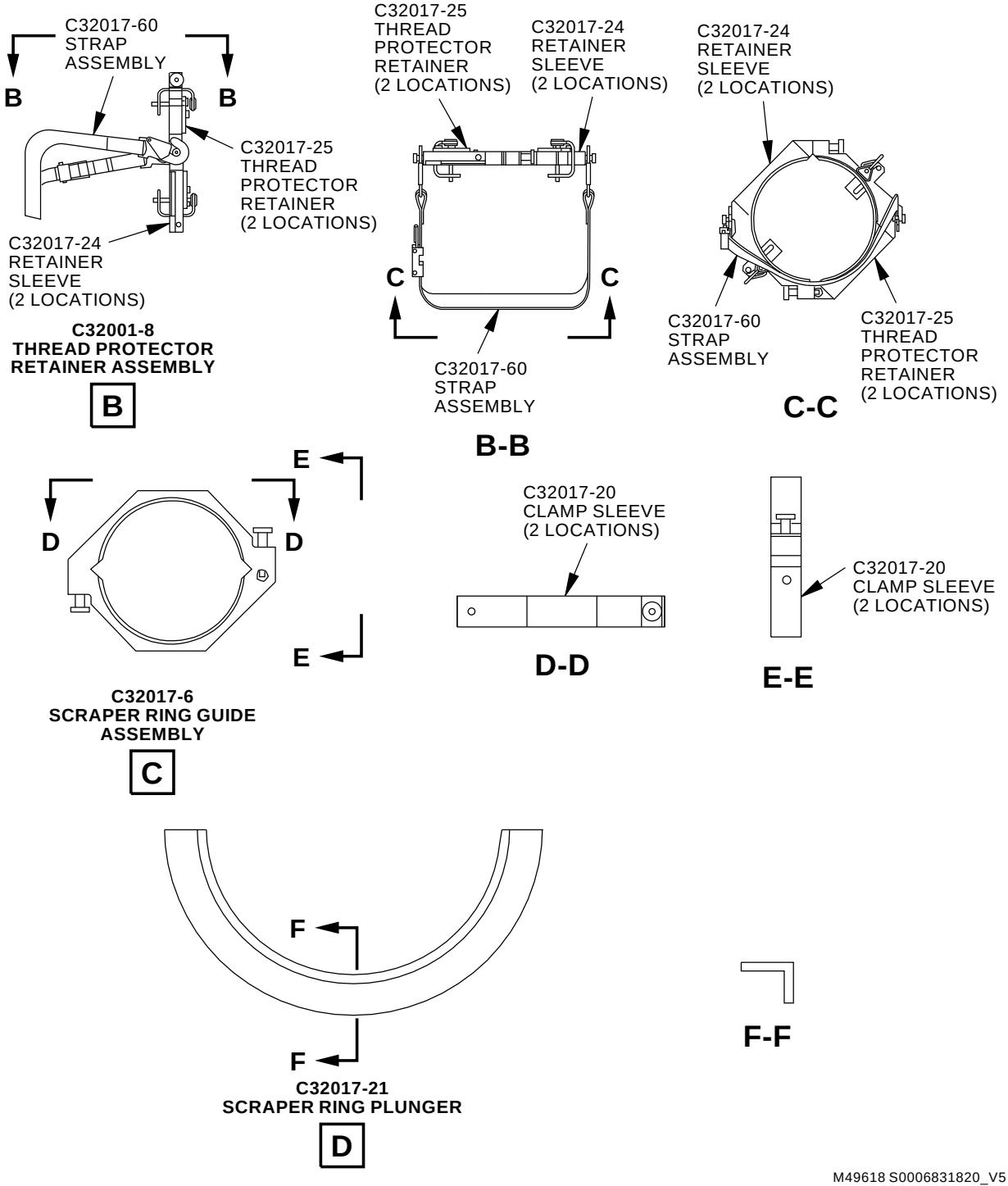

Scraper Ring Installation
Figure 5 (Sheet 2 of 2)

BOEING PROPRIETARY - Copyright © Unpublished Work - See title page for details

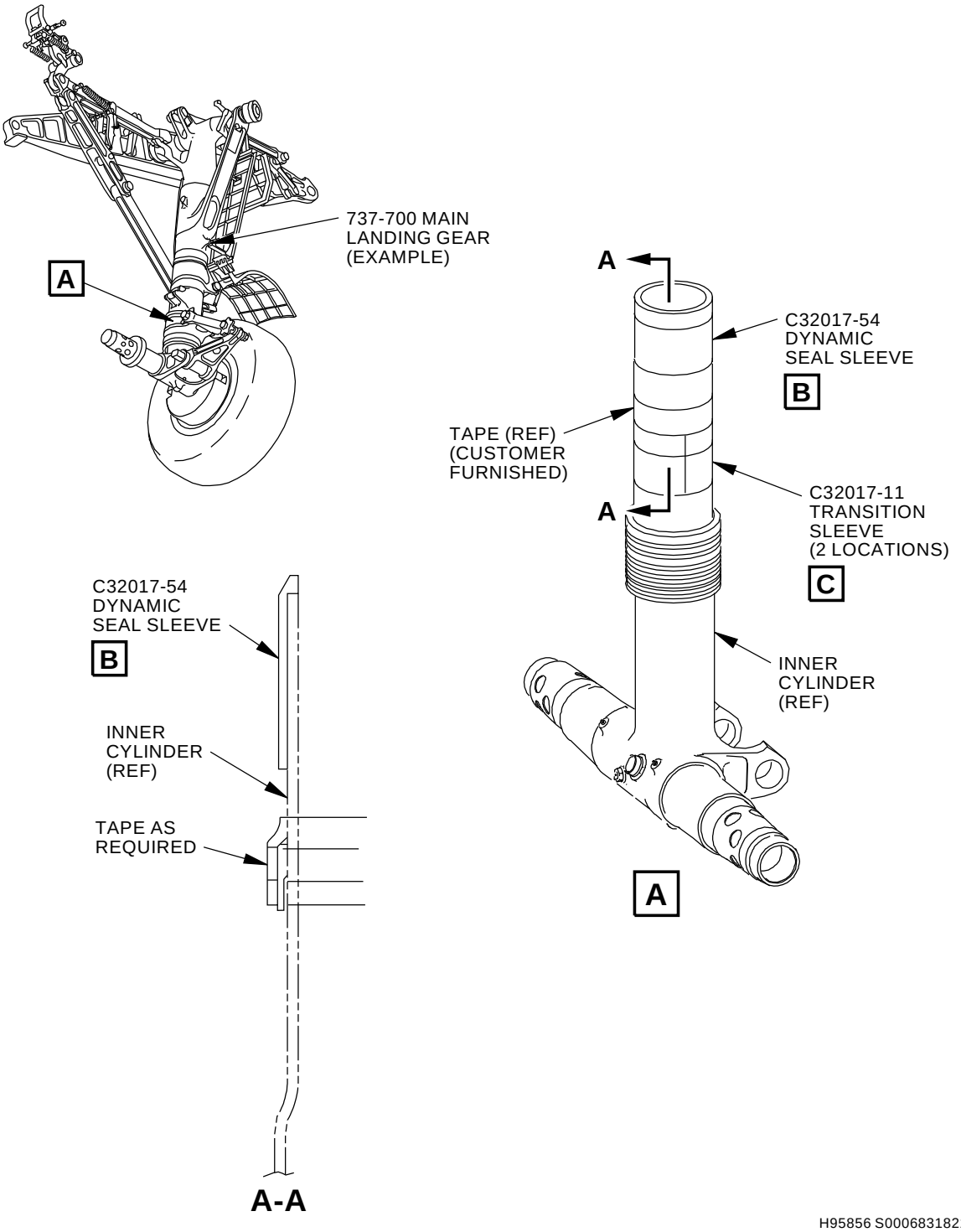

H95856 S0006831821_V5

Lower Bearing Carrier Installation
Figure 6 (Sheet 1 of 2)

BOEING PROPRIETARY - Copyright © Unpublished Work - See title page for details

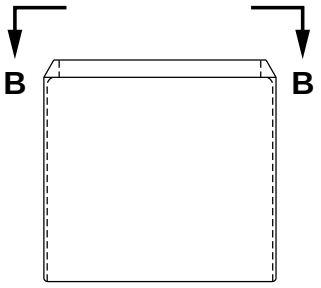

C32017-54
DYNAMIC SLEEVE SEAL

B

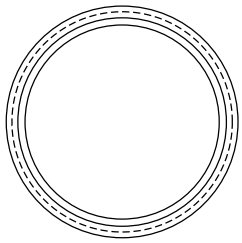

B-B

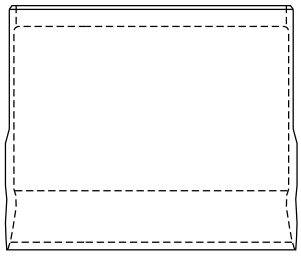

C32017-11
TRANSITION SLEEVE

C

M49629 S0006831822_V5

Lower Bearing Carrier Installation
Figure 6 (Sheet 2 of 2)

BOEING PROPRIETARY - Copyright © Unpublished Work - See title page for details

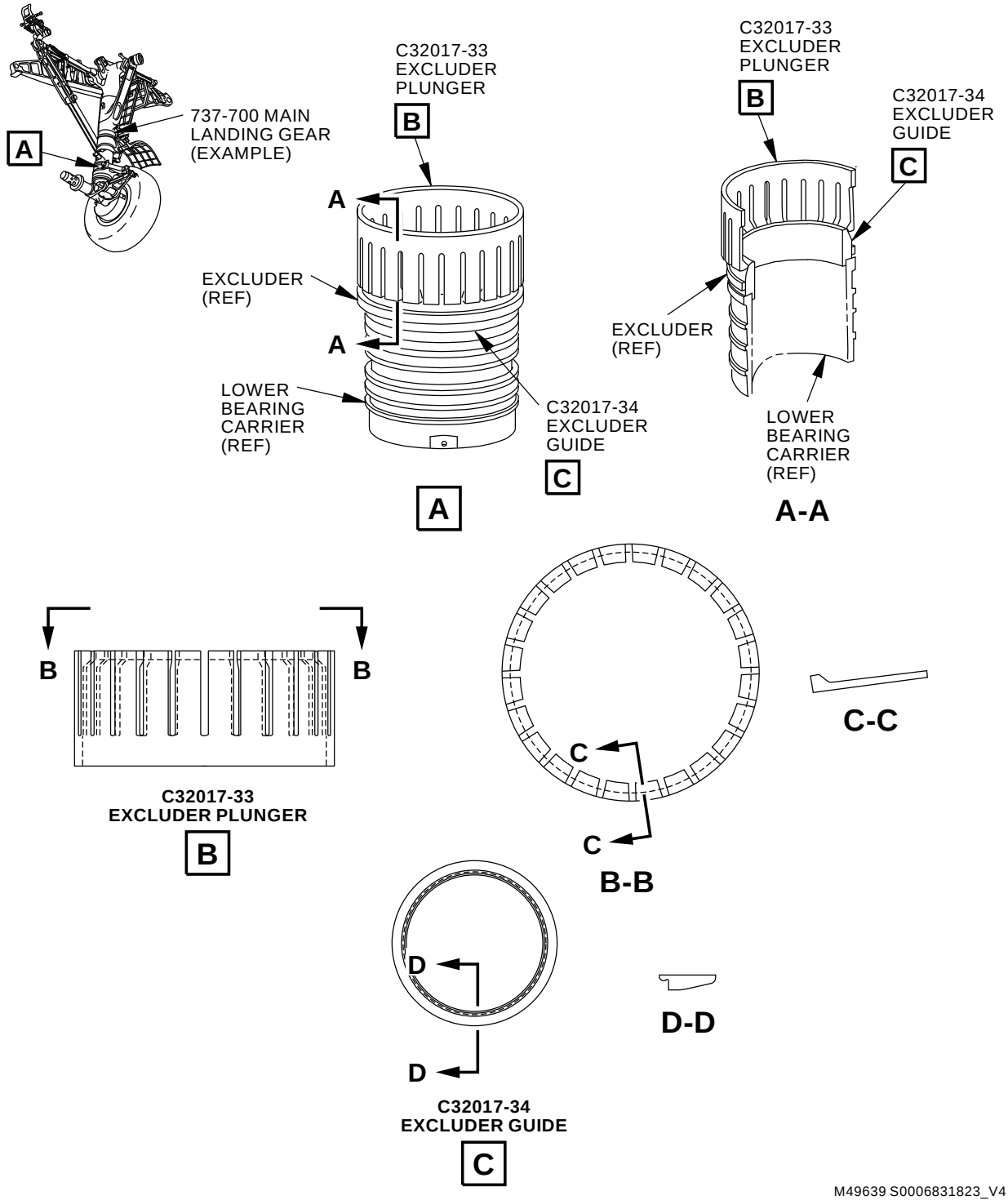

Excluder Installation
Figure 7

BOEING PROPRIETARY - Copyright © Unpublished Work - See title page for details

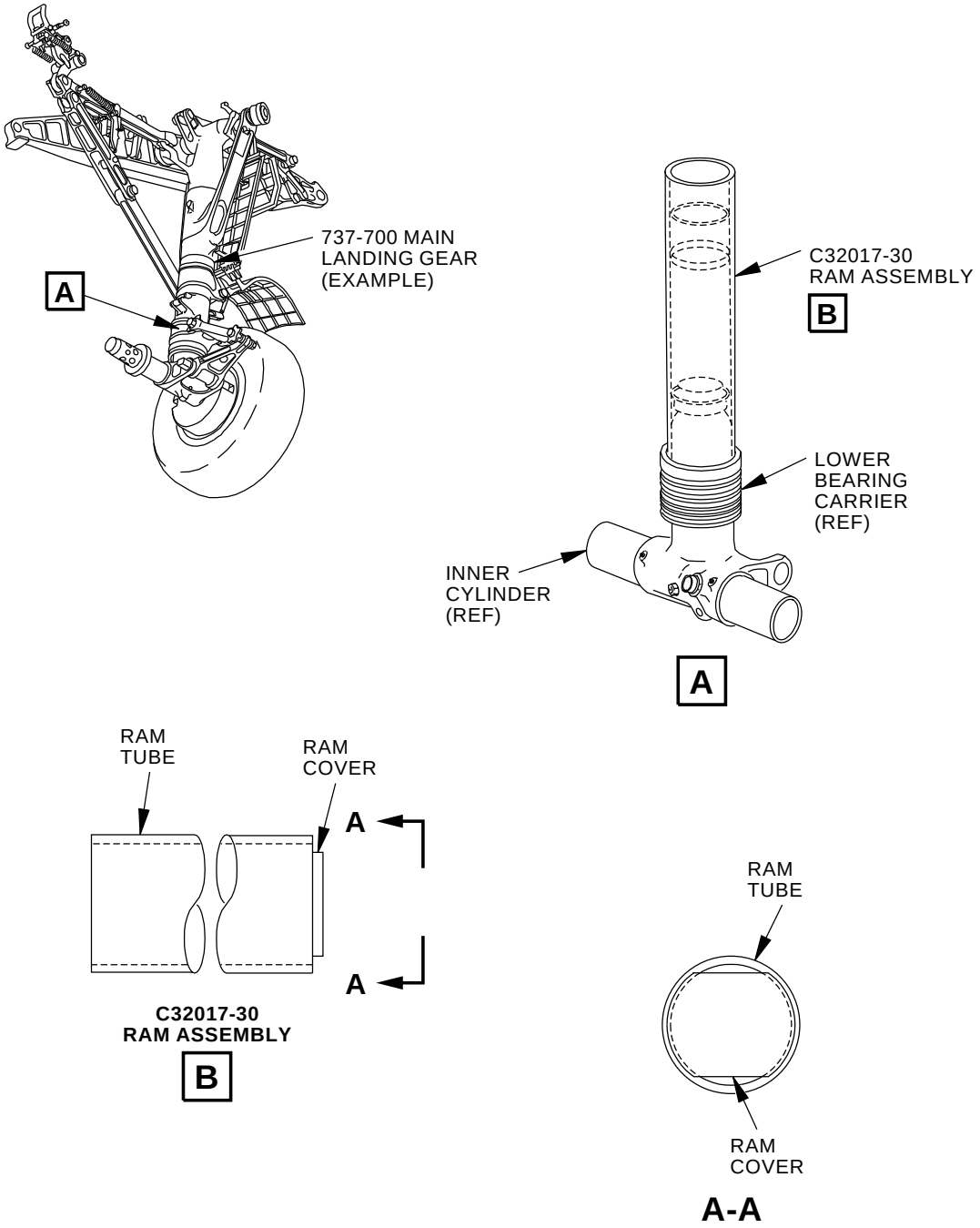

H95870 S0006831824_V4

Lower Bearing Carrier Installation
Figure 8

BOEING PROPRIETARY - Copyright © Unpublished Work - See title page for details

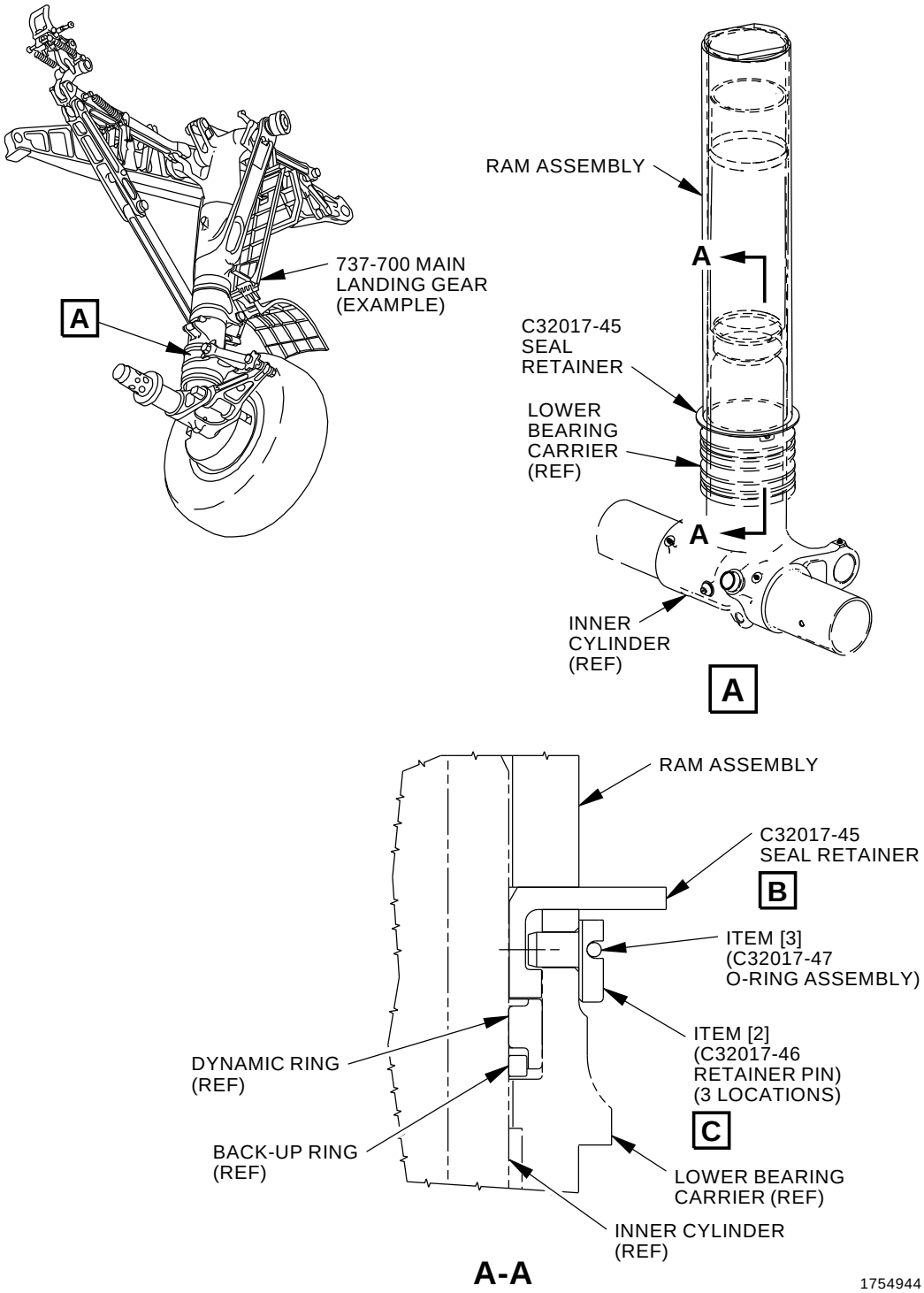

Lower Bearing Carrier Installation
Figure 9 (Sheet 1 of 2)

BOEING PROPRIETARY - Copyright © Unpublished Work - See title page for details

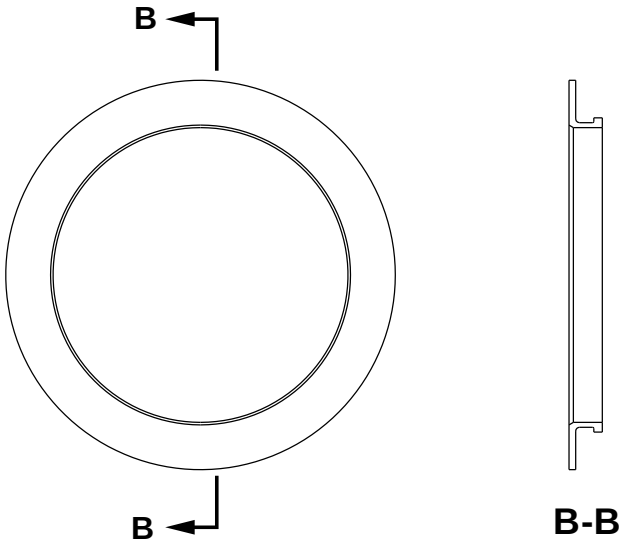

C32017-45
SEAL RETAINER

B

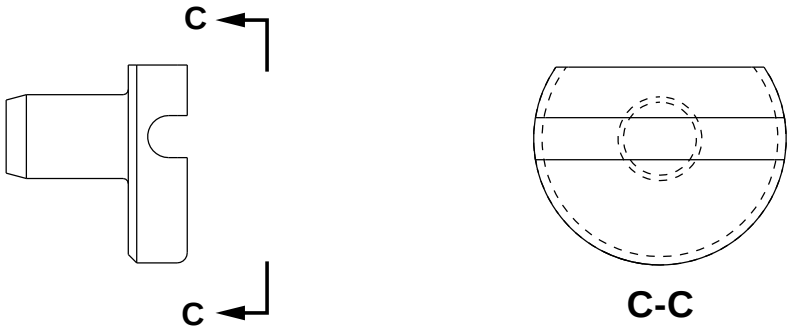

ITEM [2] (C32017-46
RETAINER RING)

C

1754965 S0000317547_V2

Lower Bearing Carrier Installation
Figure 9 (Sheet 2 of 2)

BOEING PROPRIETARY - Copyright © Unpublished Work - See title page for details

REPAIRABLE/REPLACEABLE PARTS			
ITEM NUMBER	PART NUMBER	NOMENCLATURE	VENDOR CODE
[1]	C32017-27	CARRIER PULLER SCREW	- - -
[2]	C32017-46	RETAINER PIN	- - -
[3]	C32017-47	O-RING ASSEMBLY	- - -

BOEING PROPRIETARY - Copyright © Unpublished Work - See title page for details

PART NUMBER: C32037-1

NAME: HOLDING FIXTURE - MAIN LANDING GEAR

AIRPLANE MAINTENANCE: NO

COMPONENT MAINTENANCE: YES

CMM 32-11-12, CMM 32-11-16, CMM 32-11-17, CMM 32-11-78, CMM 32-11-83

USAGE & DESCRIPTION: The C32037-1 holding fixture is used during component maintenance on all 737 airplanes except 737-100 thru -500 airplanes.

C32037 is a holding fixture used to secure the main landing gear in a vertical position during assembly or disassembly.

Refer to CMM 32-11-12, CMM 32-11-16, CMM 32-11-17, CMM 32-11-78, CMM 32-11-83 and the current C32037 drawing for complete usage instructions.

C32037-1 consists of:

C32037-1		
QUANTITY	**NOMENCLATURE**	**PART NUMBER**
1	FIXTURE ASSEMBLY	C32037-2
1	SIDE STRUT ATTACH ASSEMBLY	C32037-3
1	SIDE STRUT SUPPORT ASSEMBLY	C32037-4
1	JACKBALL PIN ASSEMBLY	C32037-5
1	JACKBALL FITTING	C32037-6
2	HAND KNOB	C32037-7
1	SHOULDER SCREW	C32037-8
1	LOCK WASHER	C32037-9
1	FLAT WASHER	C32037-10
1	HEX NUT	C32037-11
2	CABLE RING	CL-15-KR
1	LYNCH PIN	63-01
1	CABLE ASSEMBLY	CL-21-KA-30.0-LR

WEIGHT: 140 lbs (64 kg)

DIMENSIONS: 60 x 50 x 48 inches (1524 x 1270 x 1219 mm)

BOEING PROPRIETARY - Copyright © Unpublished Work - See title page for details

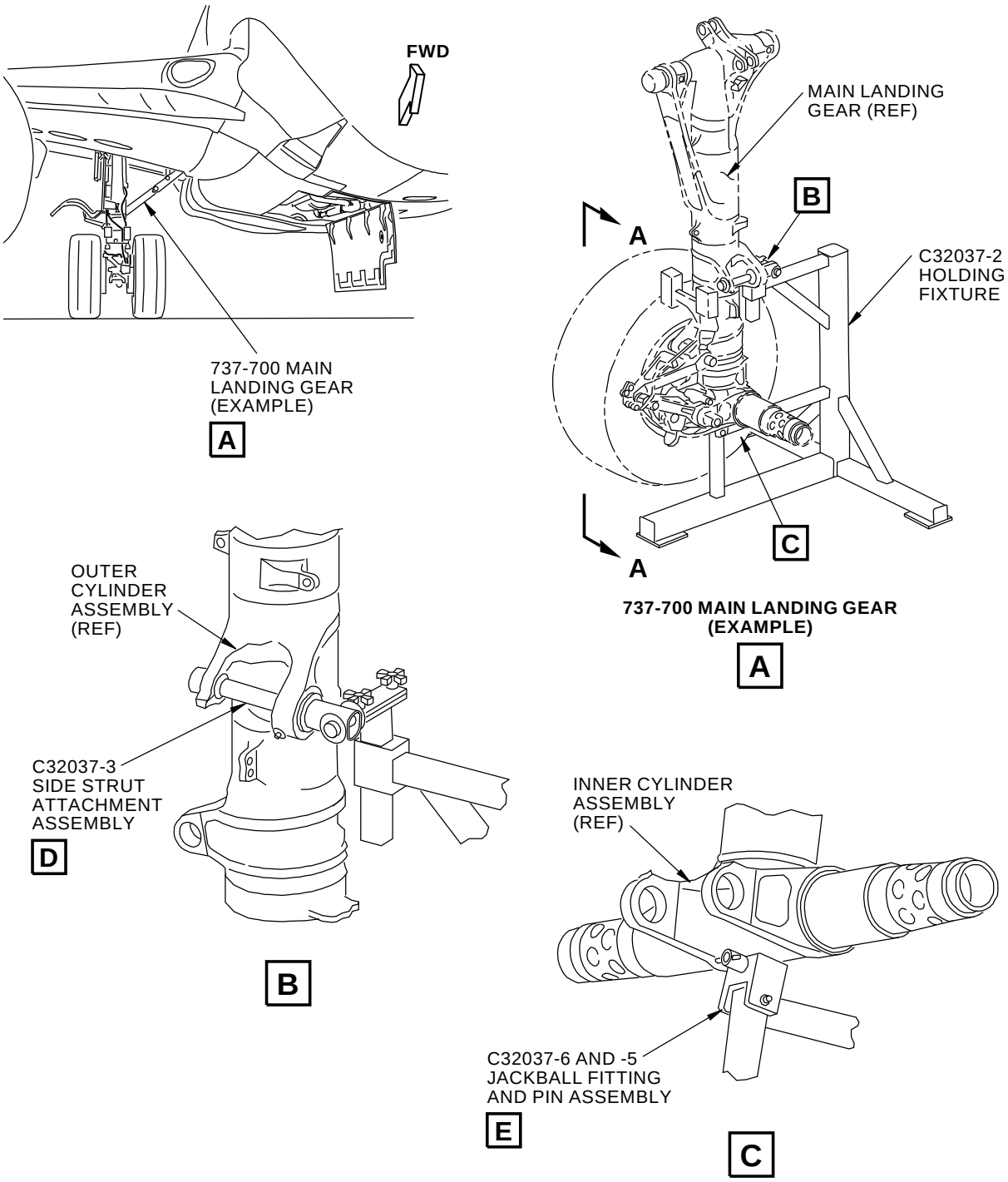

K36749 S0006831826_V4

Main Landing Gear Holding Fixture Usage
Figure 1

BOEING PROPRIETARY - Copyright © Unpublished Work - See title page for details

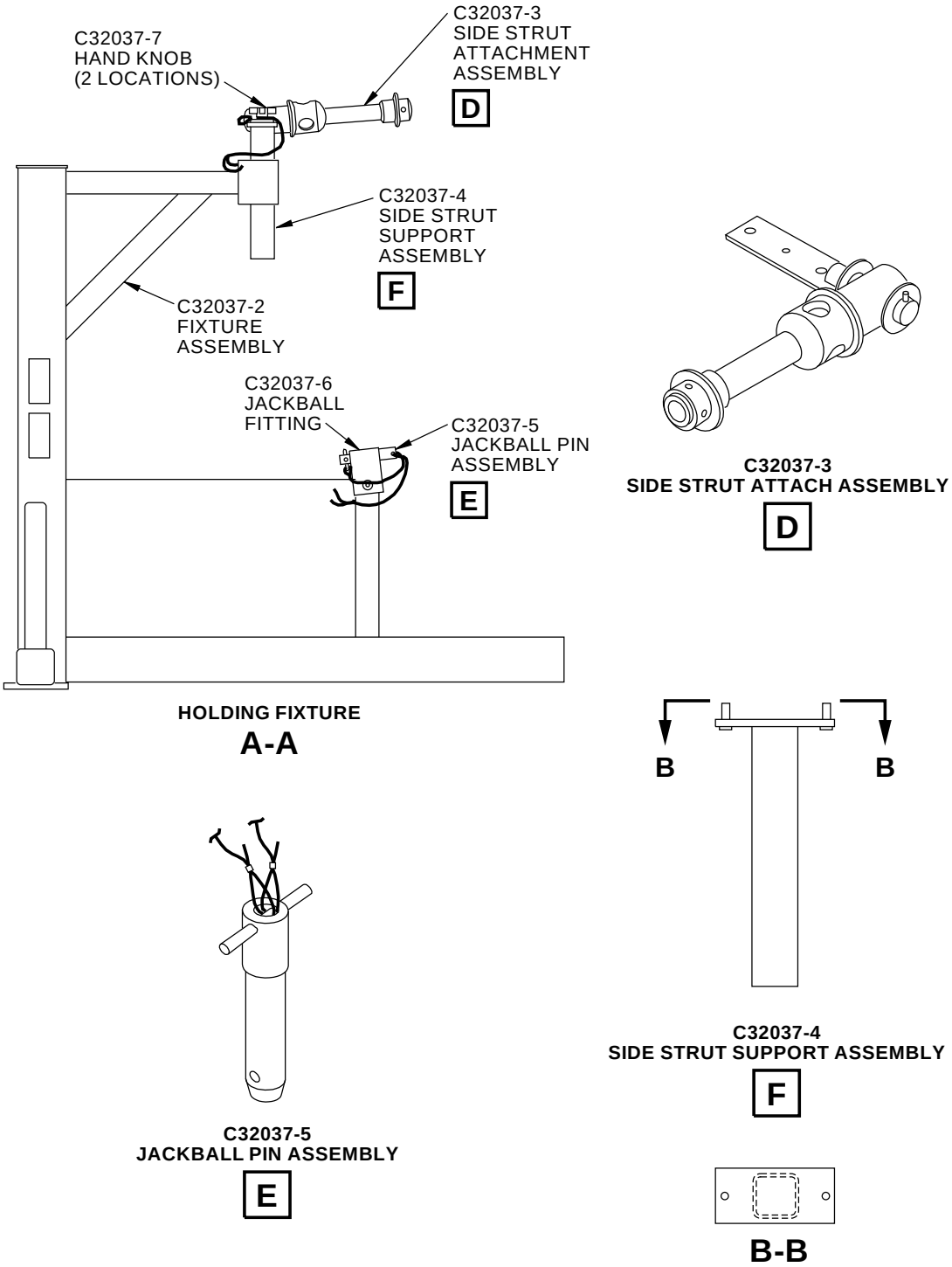

Main Landing Gear Holding Fixture Components
Figure 2

BOEING PROPRIETARY - Copyright © Unpublished Work - See title page for details

PART NUMBER: C32042-61

NAME: REMOVAL/INSTALLATION EQUIPMENT - ORIFICE TUBE AND METERING PIN, MAIN LANDING GEAR

AIRPLANE MAINTENANCE: NO

COMPONENT MAINTENANCE: YES

CMM 32-11-12

USAGE & DESCRIPTION: The C32042-61 removal/installation equipment is used during component maintenance on 737-600 thru -900 airplanes.

C32042 is used for the removal or installation of the main landing gear metering pin and orifice tube.

C32042-61 consists of:

C32042-61		
QUANTITY	**NOMENCLATURE**	**PART NUMBER**
1	COLLET ASSEMBLY	C32042-2
1	METERING PIN PULLER ASSEMBLY	C32042-5
1	UPPER TUBE ASSEMBLY	C32042-6
1	TEE WRENCH ASSEMBLY	C32042-7
1	SMALL RETAINER RING HOLDER	C32042-26
1	LARGE RETAINER RING HOLDER	C32042-27
1	SPANNER RING	C32042-38
4	SHORT SCREW	C32042-39*[1]
4	LONG SCREW	C32042-42*[2]
1	ORIFICE TUBE LOWER TUBE ASSEMBLY	C32042-62
1	STORAGE BOX	

*[1] C32042-39 STOWED ON C32042-38.
*[2] C32042-42 STOWED ON C32042-62.

WEIGHT: 50 lbs (23 kg)

DIMENSIONS: 36 x 20 x 8 inches (914 x 508 x 203 mm)

NOTE: C32042-61 supersedes C32042-1.

BOEING PROPRIETARY - Copyright © Unpublished Work - See title page for details

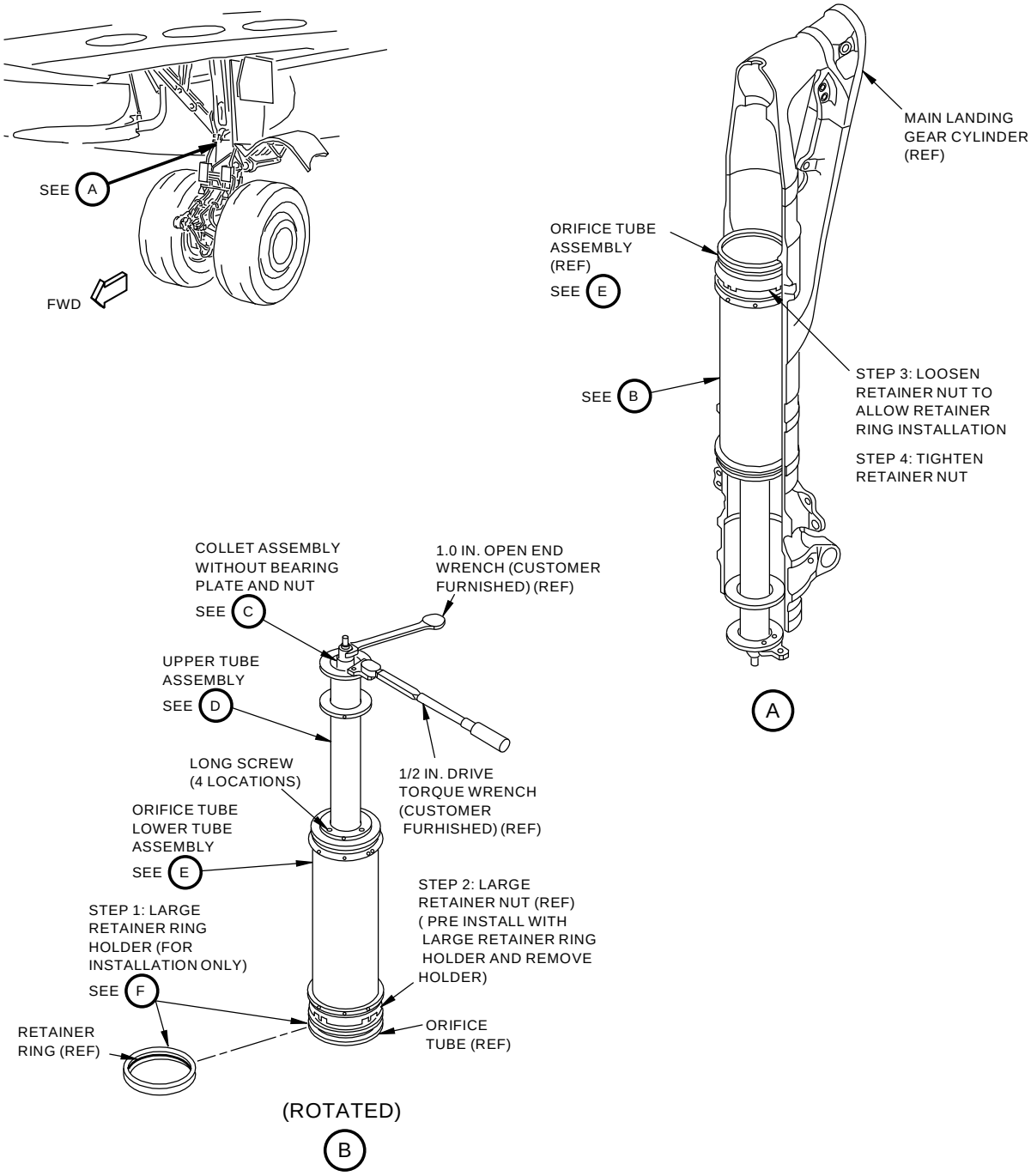

ORIFICE TUBE RETAINER, NUT INSTALLATION AND REMOVAL

K38989 S0006831829_V2

Main Landing Gear Removal/Installation Equipment
Figure 1

BOEING PROPRIETARY - Copyright © Unpublished Work - See title page for details

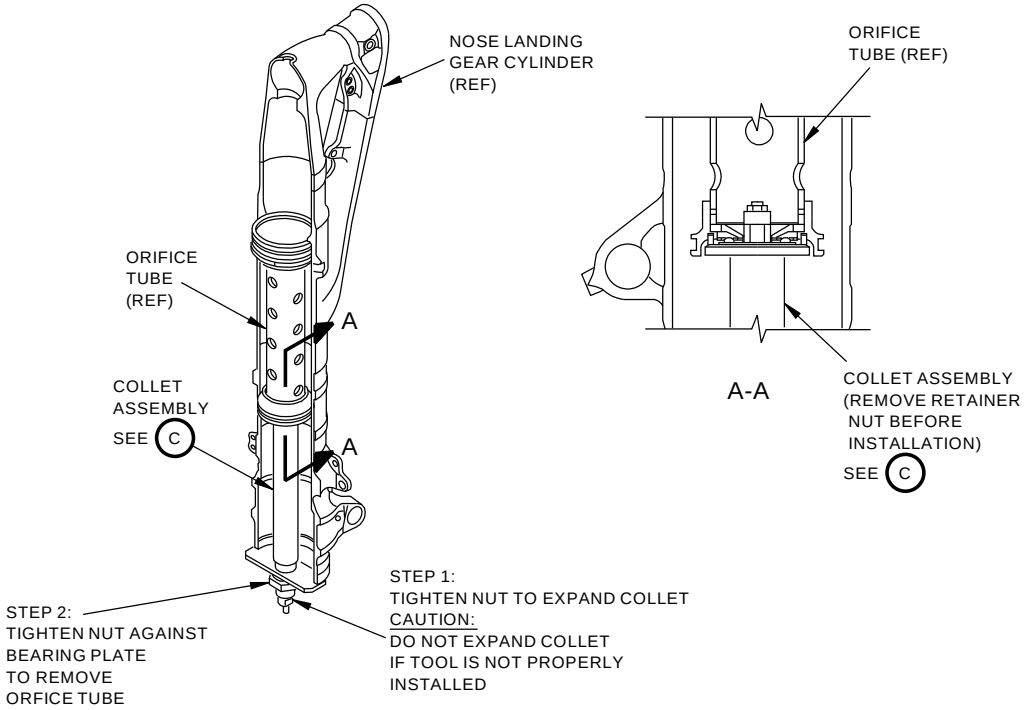

ORIFICE TUBE REMOVAL

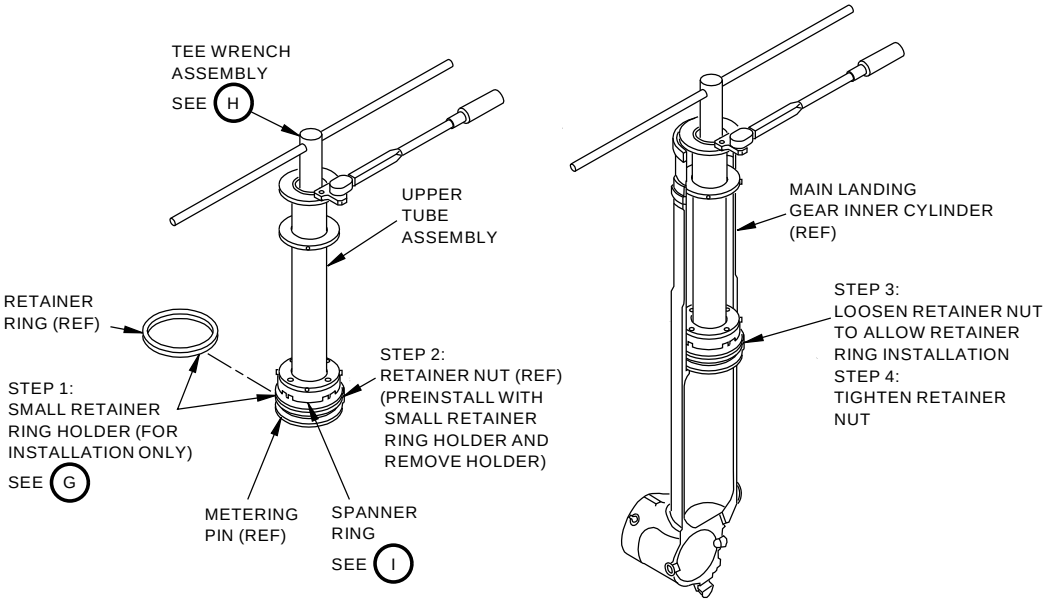

METERING PIN RETAINER NUT INSTALLATION/REMOVAL

K39008 S0006831830_V2

Main Landing Gear Removal/Installation Equipment
Figure 2

BOEING PROPRIETARY - Copyright © Unpublished Work - See title page for details

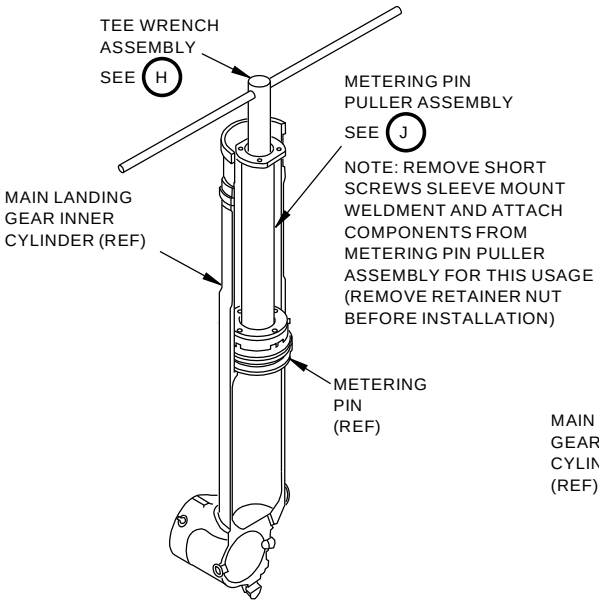

STEP 1
METERING PIN REMOVAL

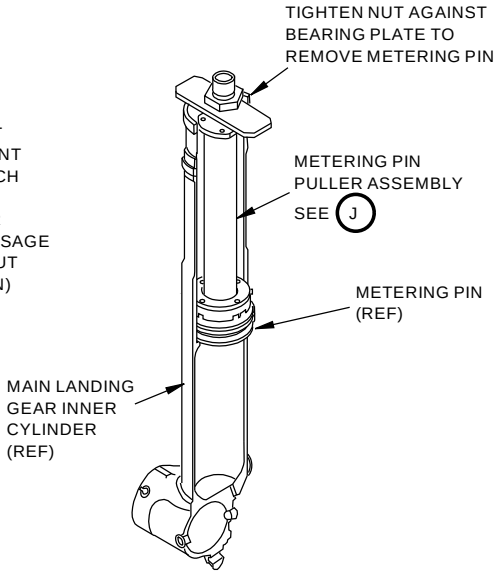

STEP 2
METERING PIN REMOVAL

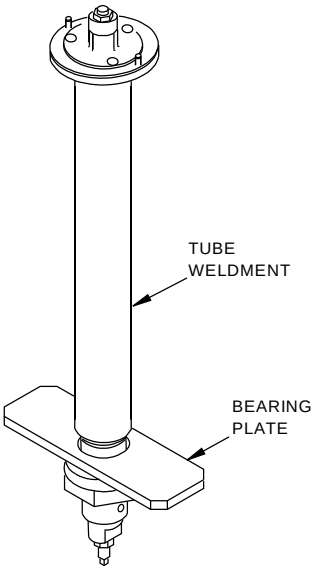

C32042-2
COLLET ASSEMBLY

C

K39010 S0006831831_V3

Main Landing Gear Removal/Installation Equipment
Figure 3

BOEING PROPRIETARY - Copyright © Unpublished Work - See title page for details

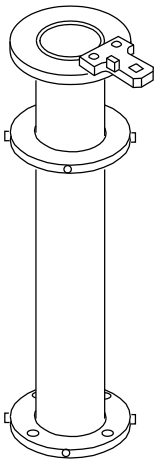

C32042-6
UPPER TUBE ASSEMBLY

D

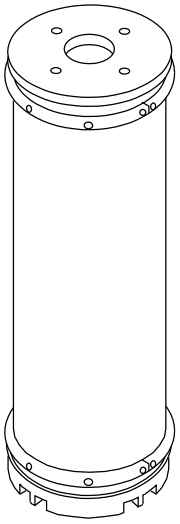

C32042-62
ORIFICE TUBE
LOWER TUBE ASSEMBLY

E

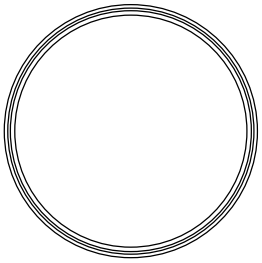

C32042-27
LARGE RETAINER RING HOLDER

F

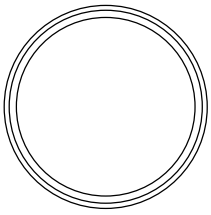

C32042-26
SMALL RETAINER RING HOLDER

G

K39776 S0006831832_V3

Main Landing Gear Removal/Installation Equipment
Figure 4

BOEING PROPRIETARY - Copyright © Unpublished Work - See title page for details

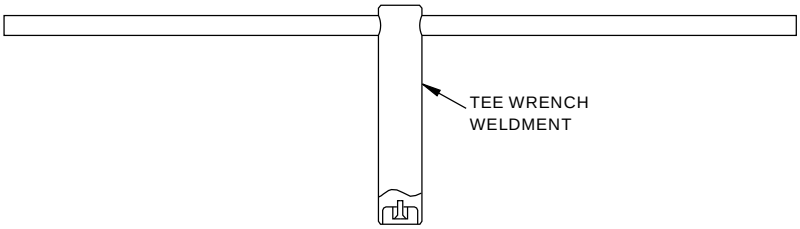

C32042-7
TEE WRENCH ASSEMBLY

H

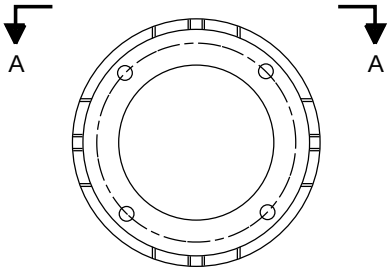

C32042-38
SPANNER RING

I

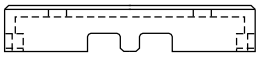

A-A

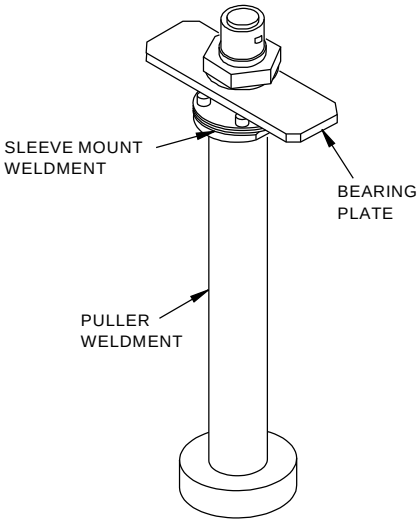

C32042-5
METERING PIN PULLER ASSEMBLY

J

K39829 S0006831833_V3

Main Landing Gear Removal/Installation Equipment
Figure 5

BOEING PROPRIETARY - Copyright © Unpublished Work - See title page for details

PART NUMBER: C32045-23

NAME: HOLDING FIXTURE - SEAL CHANGE, MAIN LANDING GEAR

AIRPLANE MAINTENANCE: YES

AMM 32-11-21

COMPONENT MAINTENANCE: NO

USAGE & DESCRIPTION: The C32045-23 holding fixture is used on all 737 airplanes except 737-100 thru -500 airplanes.

C32045 is used to support the main landing gear inner cylinder during seal change.

Refer to AMM 32-11-21 and the current C32045 drawing for complete usage instructions.

C32045-23 consists of:

C32045-23		
QUANTITY	**NOMENCLATURE**	**PART NUMBER**
1	RIGHT HAND GEAR SUPPORT ASSEMBLY	C32045-24
1	LEFT HAND GEAR SUPPORT ASSEMBLY	C32045-25
2	AXLE SLEEVE ASSEMBLY	C32045-13
2	LINK PIN	C32045-18*[1]
1	CONNECTOR ROD ASSEMBLY	C32045-19
1	JACK SUPPORT ASSEMBLY	C32045-26
1	STORAGE BOX	

*[1] C32045-18 IS STOWED ON C32045-24 AND -25.

WEIGHT: 194 lbs (88 kg)

DIMENSIONS: 23 x 29 x 45 inches (584 x 737 x 1143 mm)

NOTE: C32045-23 supersedes C32045-1.

BOEING PROPRIETARY - Copyright © Unpublished Work - See title page for details

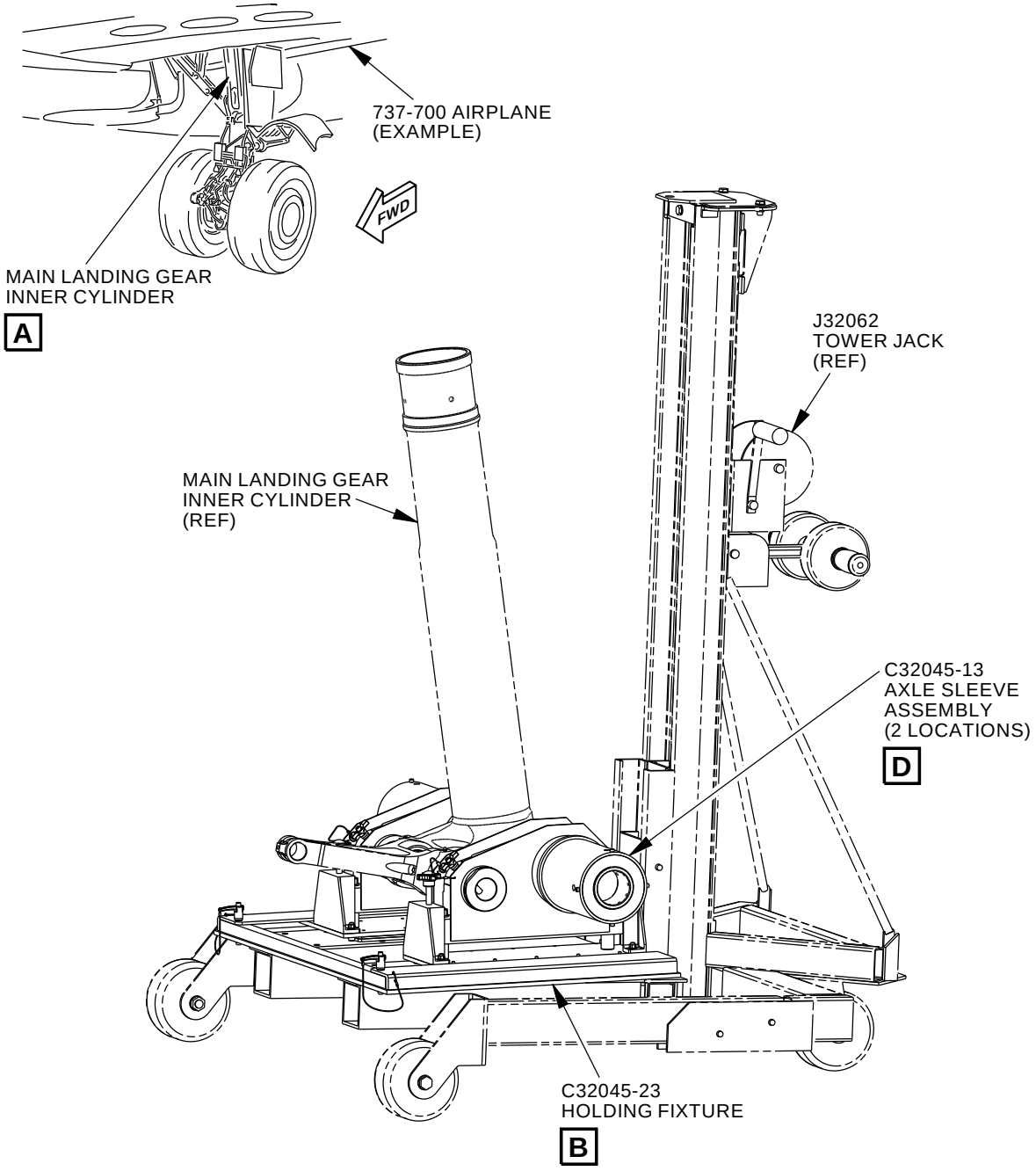

MAIN LANDING GEAR INNER CYLINDER

A

M26875 S0006831835_V5

Main Landing Gear Seal Change Holding Fixture
Figure 1 (Sheet 1 of 4)

BOEING PROPRIETARY - Copyright © Unpublished Work - See title page for details

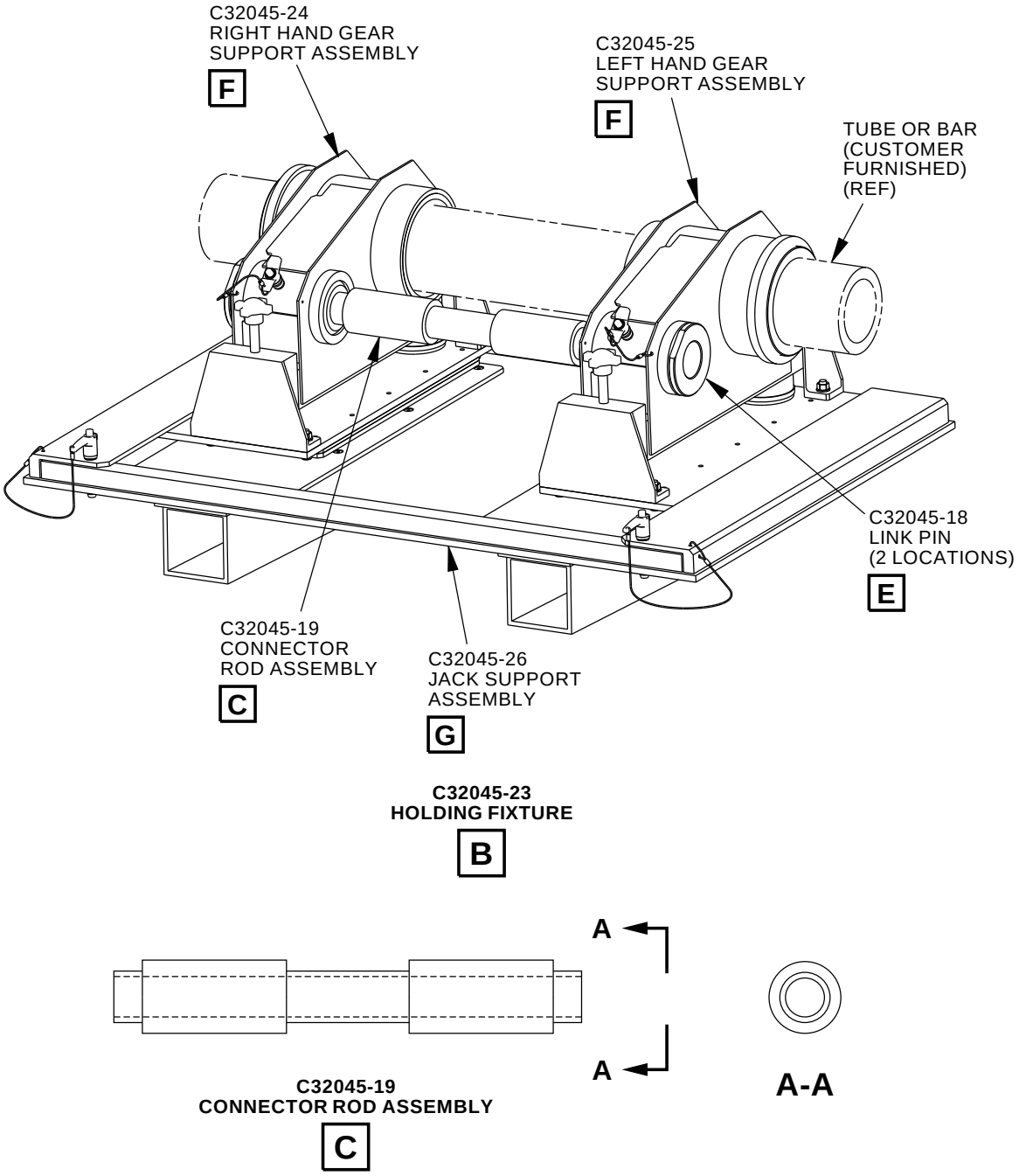

M26963 S0006831836_V5

Main Landing Gear Seal Change Holding Fixture
Figure 1 (Sheet 2 of 4)

BOEING PROPRIETARY - Copyright © Unpublished Work - See title page for details

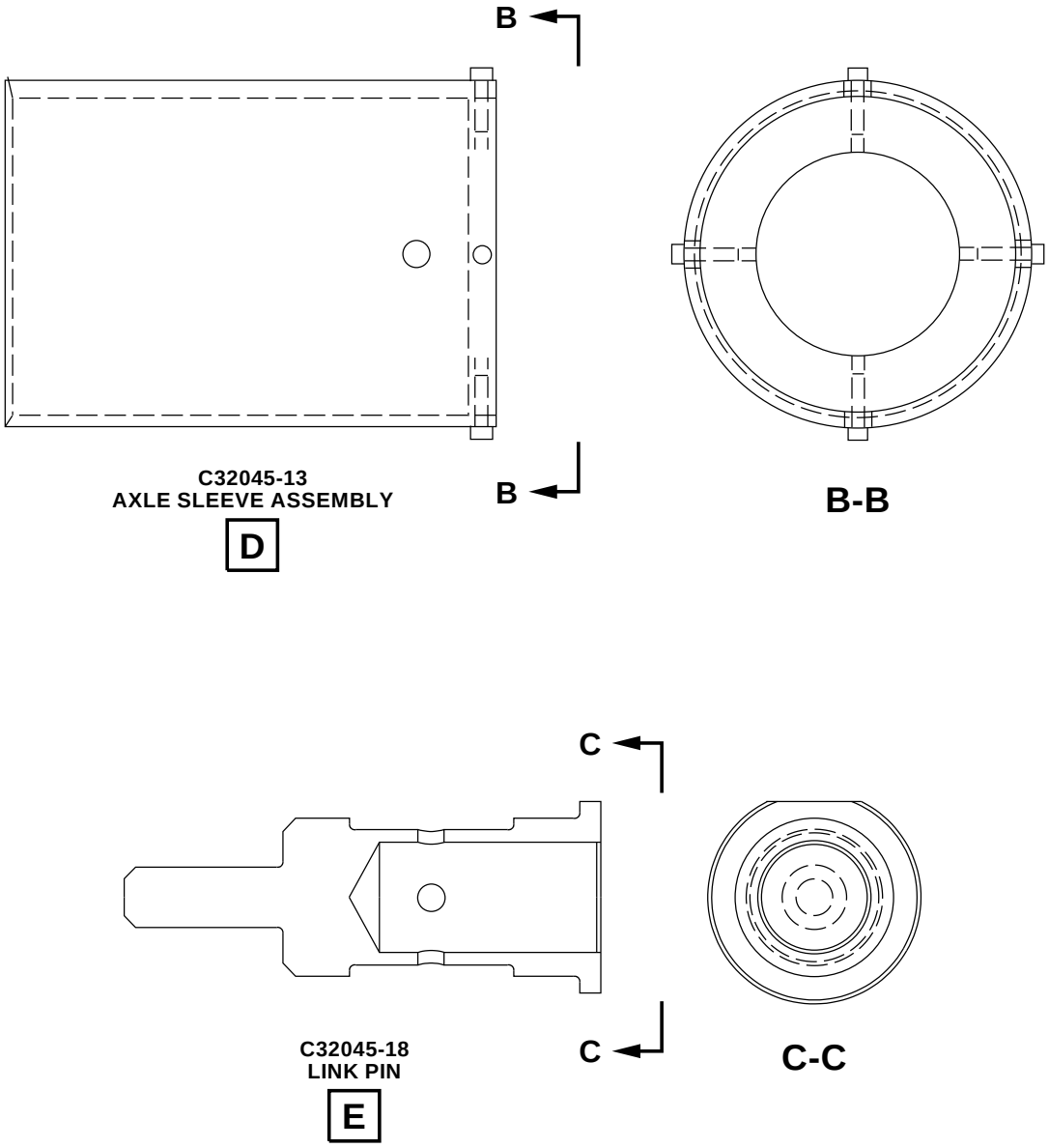

M26976 S0006831837_V4

Main Landing Gear Seal Change Holding Fixture
Figure 1 (Sheet 3 of 4)

BOEING PROPRIETARY - Copyright © Unpublished Work - See title page for details

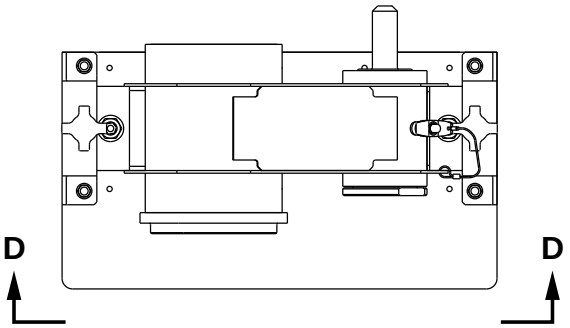

C32045-24
RIGHT HAND GEAR SUPPORT ASSEMBLY SHOWN
C32045-25 OPPOSITE

F

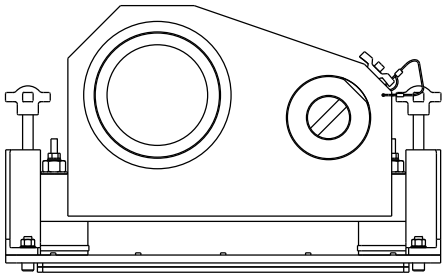

D-D

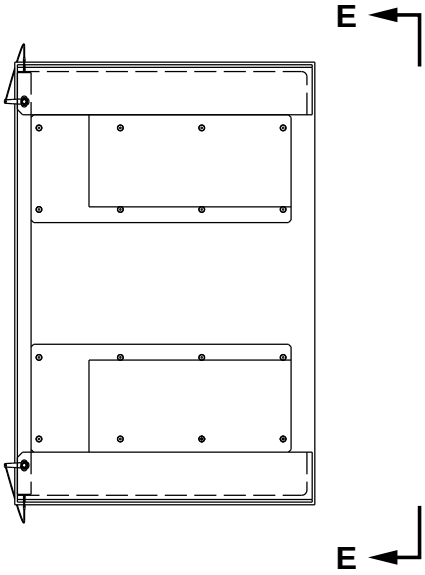

C32045-26
JACK SUPPORT ASSEMBLY

G

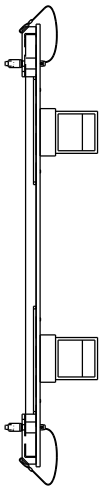

E-E

2122213 S0000456573_V2

Main Landing Gear Seal Change Holding Fixture
Figure 1 (Sheet 4 of 4)

BOEING PROPRIETARY - Copyright © Unpublished Work - See title page for details

PART NUMBER: C32052-1

NAME: LEVER TOOL - DOWNLOCK RELEASE MAIN LANDING GEAR

AIRPLANE MAINTENANCE: YES

AMM 32-11-89

COMPONENT MAINTENANCE: NO

USAGE & DESCRIPTION: The C32052-1 lever tool is used on all 737 airplanes except 737-100 thru -500 airplanes.

C32052 is used to manually release the main landing gear down lock mechanism.

Refer to AMM 32-11-89 and the current C32052 drawing for complete usage instructions.

C32052-1 consists of:

C32052-1		
QUANTITY	**NOMENCLATURE**	**PART NUMBER**
1	LEVER TOOL	C32052-2
1	STORAGE BOX	

WEIGHT: 3 lbs (1 kg)

DIMENSIONS: 21 x 3 x 3 inches (533 x 76 x 76 mm)

BOEING PROPRIETARY - Copyright © Unpublished Work - See title page for details

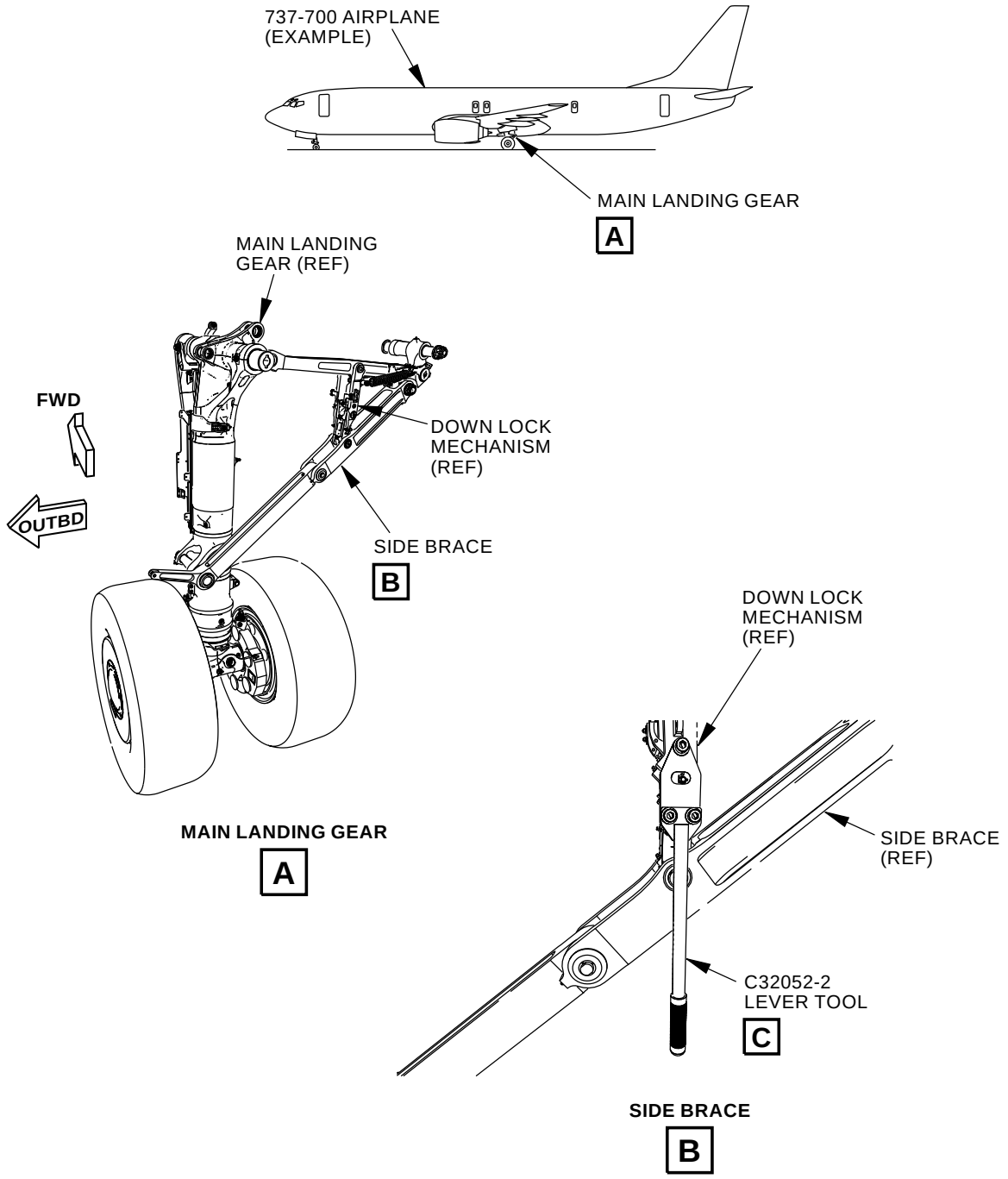

2038012 S0000408691_V2

Main Landing Gear Downlock Release Lever Tool
Figure 1 (Sheet 1 of 2)

BOEING PROPRIETARY - Copyright © Unpublished Work - See title page for details

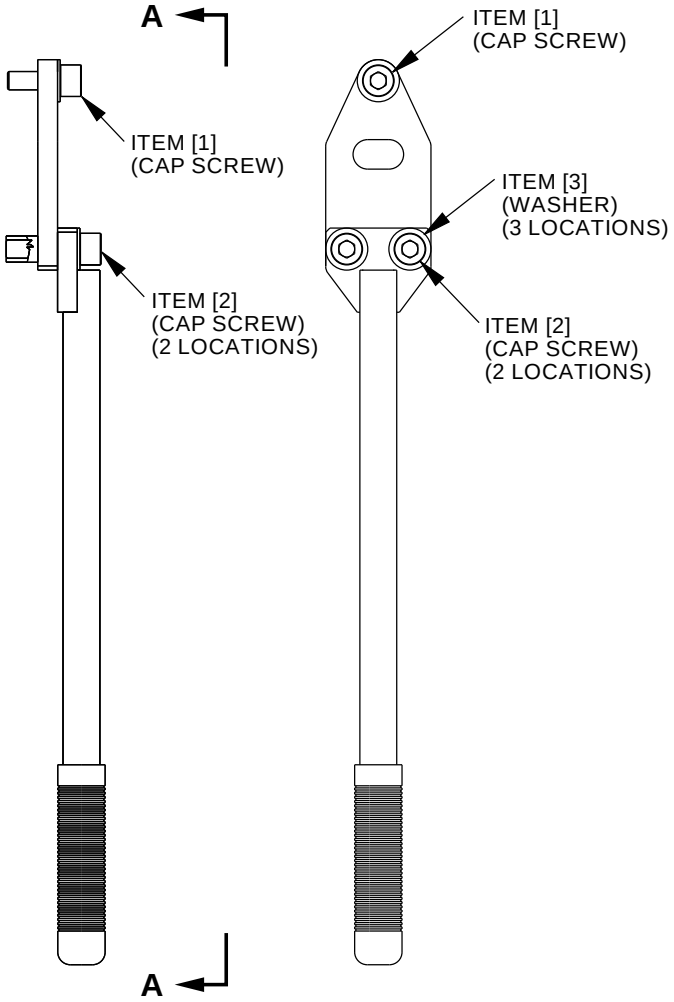

C32052-2
LEVER TOOL

C

2038015 S0000408692_V2

Main Landing Gear Downlock Release Lever Tool
Figure 1 (Sheet 2 of 2)

BOEING PROPRIETARY - Copyright © Unpublished Work - See title page for details

REPAIRABLE/REPLACEABLE PARTS			
ITEM NUMBER	PART NUMBER	NOMENCLATURE	VENDOR CODE
[1]	C32052-7	CAP SCREW	- - -
[2]	C32052-8	CAP SCREW	- - -
[3]	C32052-11	WASHER	- - -

BOEING PROPRIETARY - Copyright © Unpublished Work - See title page for details

PART NUMBER: C32053-37

NAME: FIXTURE EQUIPMENT - SIDE STRUT ASSEMBLY, MAIN LANDING GEAR

AIRPLANE MAINTENANCE: NO

COMPONENT MAINTENANCE: YES

CMM 32-11-13

USAGE & DESCRIPTION: The C32053-37 fixture equipment is used during component maintenance on all 737-100 thru -900 airplanes.

C32053 is used to check the side strut assemblies for proper range of motion and fold dimensions.

Refer to CMM 32-11-13 and the current C32053 tool drawing for complete usage instructions.

C32053-37 consists of:

C32053-37		
QUANTITY	**NOMENCLATURE**	**PART NUMBER**
1	FIXTURE ASSEMBLY	C32053-2*[1]
1	FIXTURE ASSEMBLY	C32053-3*[1]
1	PIN A	C32053-5
1	PIN B	C32053-6
2	NUT	C32053-7
1	PIN C	C32053-8
1	LARGE DIAMOND CHECK PIN	C32053-39
1	MEDIUM DIAMOND CHECK PIN	C32053-10
1	SMALL DIAMOND CHECK PIN	C32053-11
1	SPACER	C32053-12
1	STORAGE BOX	

*[1] C32053-2 AND -3 ARE NOT STOWED IN THE STORAGE BOX.

WEIGHT: 340 lbs (154 kg)

DIMENSIONS: 50 x 45 x 14 inches (1270 x 1143 x 356 mm)

NOTE: C32053-37 supersedes C32053-1.

BOEING PROPRIETARY - Copyright © Unpublished Work - See title page for details

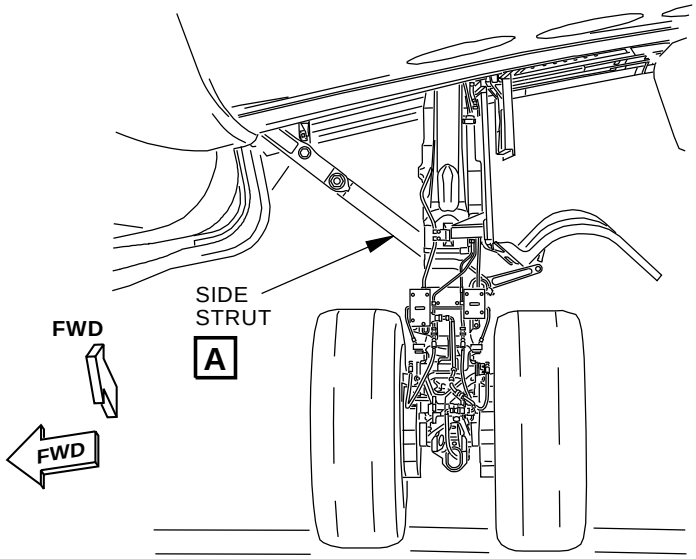

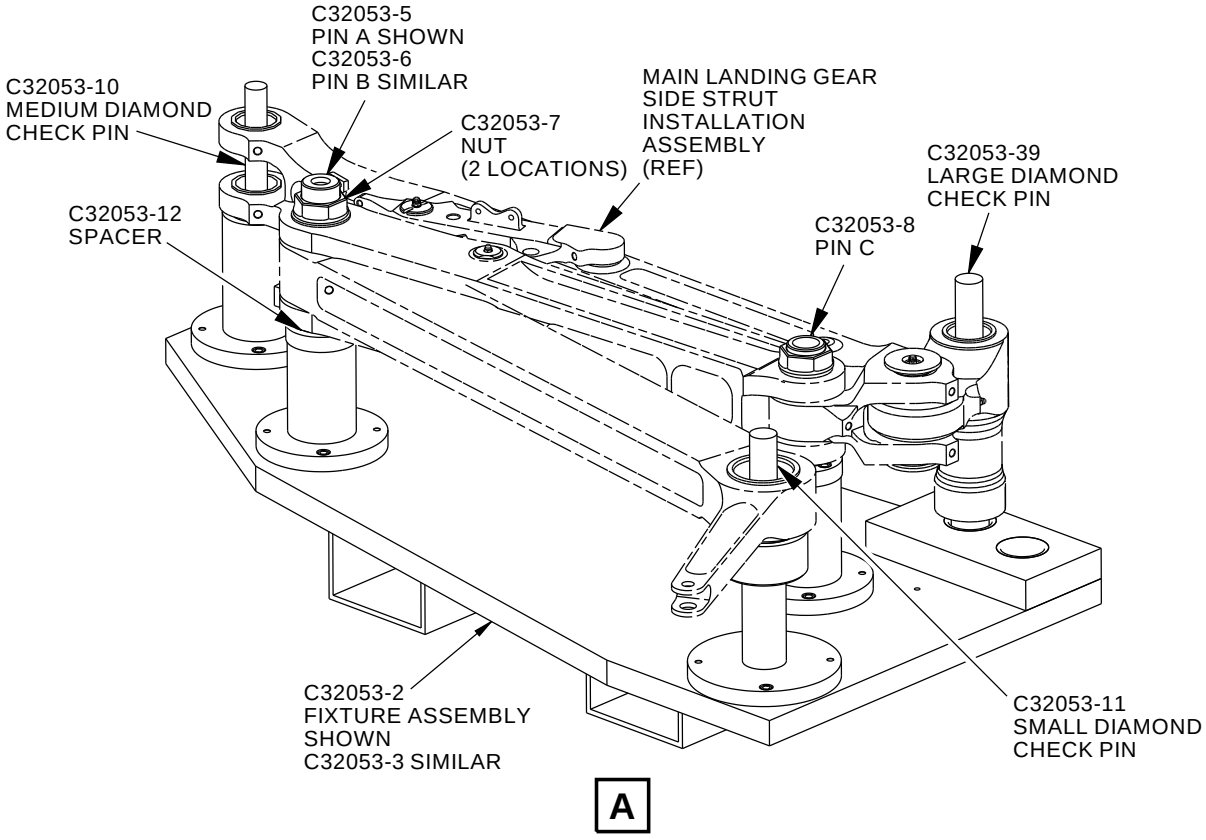

2241275 S0000501155_V2

Main Landing Gear Side Strut Assembly Fixture Equipment
Figure 1

BOEING PROPRIETARY - Copyright © Unpublished Work - See title page for details

PART NUMBER: C32025-1, -7

NAME: SPANNER WRENCH - GLAND NUT, NOSE LANDING GEAR

AIRPLANE MAINTENANCE: YES

AMM 32-21-11, AMM 32-21-24

COMPONENT MAINTENANCE: NO

USAGE & DESCRIPTION: The C32025-1 (option) or C32025-7 (preferred) spanner wrench is used on all 737 airplanes, except 737-100 thru -500 airplanes.

C32025 is used in conjunction with a customer-furnished, 1/2-inch square-drive wrench. C32025 is used to remove or install the gland nut on the nose landing gear. C32025 is a spanner wrench that fits the slots on the nose landing gear gland nut.

Refer to AMM 32-21-11, AMM 32-21-24 and the current C32025 drawing for complete usage instructions.

C32025-1 and -7 consist of:

C32025-1		
QUANTITY	**NOMENCLATURE**	**PART NUMBER**
1	WRENCH ASSEMBLY	C32025-2
1	STORAGE BOX	

C32025-7		
QUANTITY	**NOMENCLATURE**	**PART NUMBER**
1	WRENCH ASSEMBLY	C32025-8
1	STORAGE BOX	

WEIGHT: 2 lbs (1 kg)

DIMENSIONS: 2 x 6 x 6 inches (51 x 152 x 152 mm)

NOTE: C32025-7 replaces C32025-1 for future procurement.

BOEING PROPRIETARY - Copyright © Unpublished Work - See title page for details

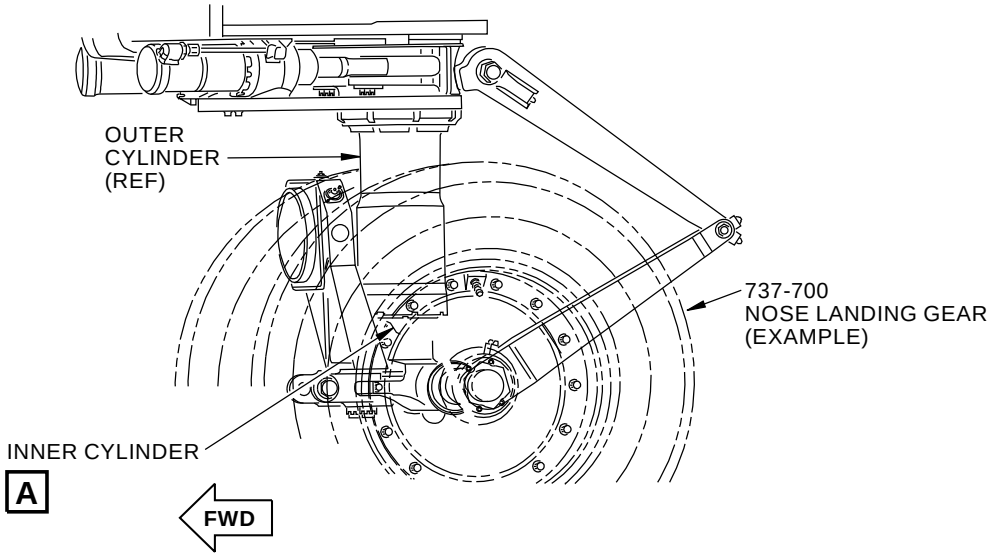

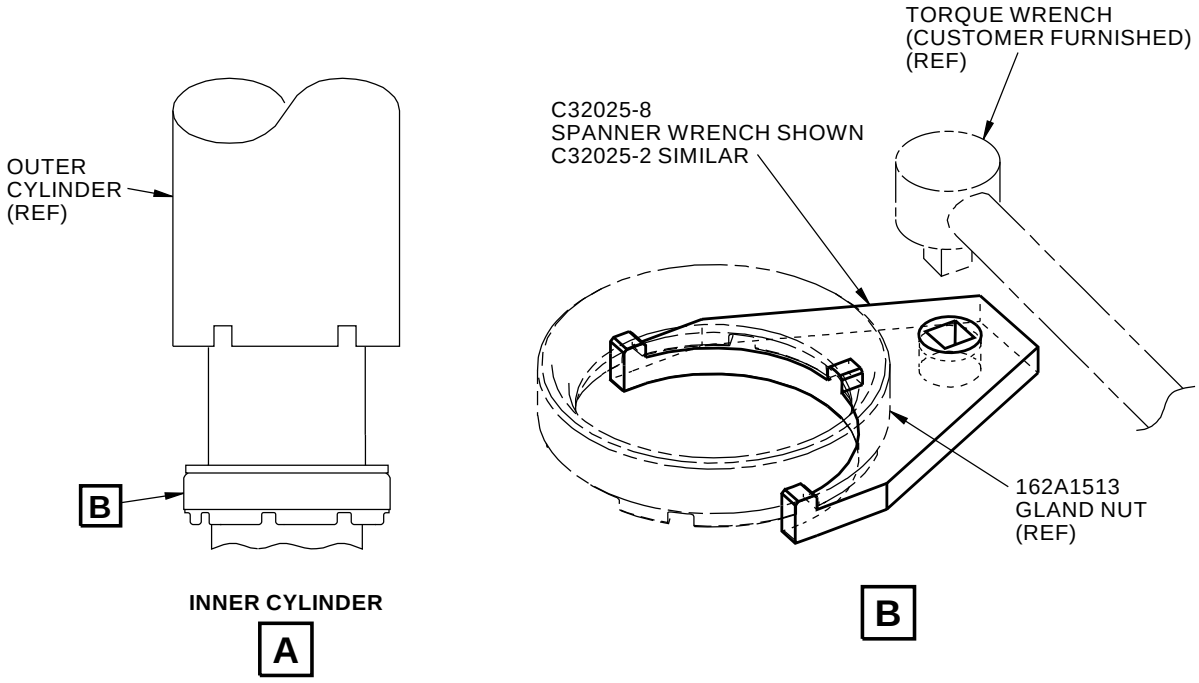

1348396 S0000240963_V3

Nose Landing Gear Gland Nut Spanner Wrench
Figure 1

BOEING PROPRIETARY - Copyright © Unpublished Work - See title page for details

PART NUMBER: C32033-1

NAME: REMOVAL/INSTALLATION EQUIPMENT - TRUNNION PIN, NOSE LANDING GEAR

AIRPLANE MAINTENANCE: YES

AMM 32-21-00, AMM 32-21-21

COMPONENT MAINTENANCE: NO

USAGE & DESCRIPTION: The C32033-1 removal/installation equipment is used on all 737-600 thru -900 airplanes.

C32033 is used to remove or install the nose landing gear trunnion pins and upper drag strut trunnion pins.

Refer to AMM 32-21-00, AMM 32-21-21 and the current C32033 drawing for complete usage instructions.

C32033-1 consists of:

C32033-1		
QUANTITY	**NOMENCLATURE**	**PART NUMBER**
2	NOSE LANDING GEAR ALIGNMENT SLUG	C32033-2
2	ALIGNMENT PIN ASSEMBLY	C32033-3
2	DRAG STRUT ALIGNMENT SLUG	C32033-4
1	DRAG STRUT TRUNNION PIN PULLER ASSEMBLY	C32033-5
1	NOSE LANDING GEAR TRUNNION PIN PULLER ASSEMBLY	C32033-6
1	SMALL SLIDE HAMMER	C32033-20
1	SLIDE SCREW	CG240-8
1	SLIDE HAMMER	CG240-9
1	STORAGE BOX	

WEIGHT: 30 lbs (14 kg)

DIMENSIONS: 2 x 8 x 24 inches (51 x 203 x 610 mm)

BOEING PROPRIETARY - Copyright © Unpublished Work - See title page for details

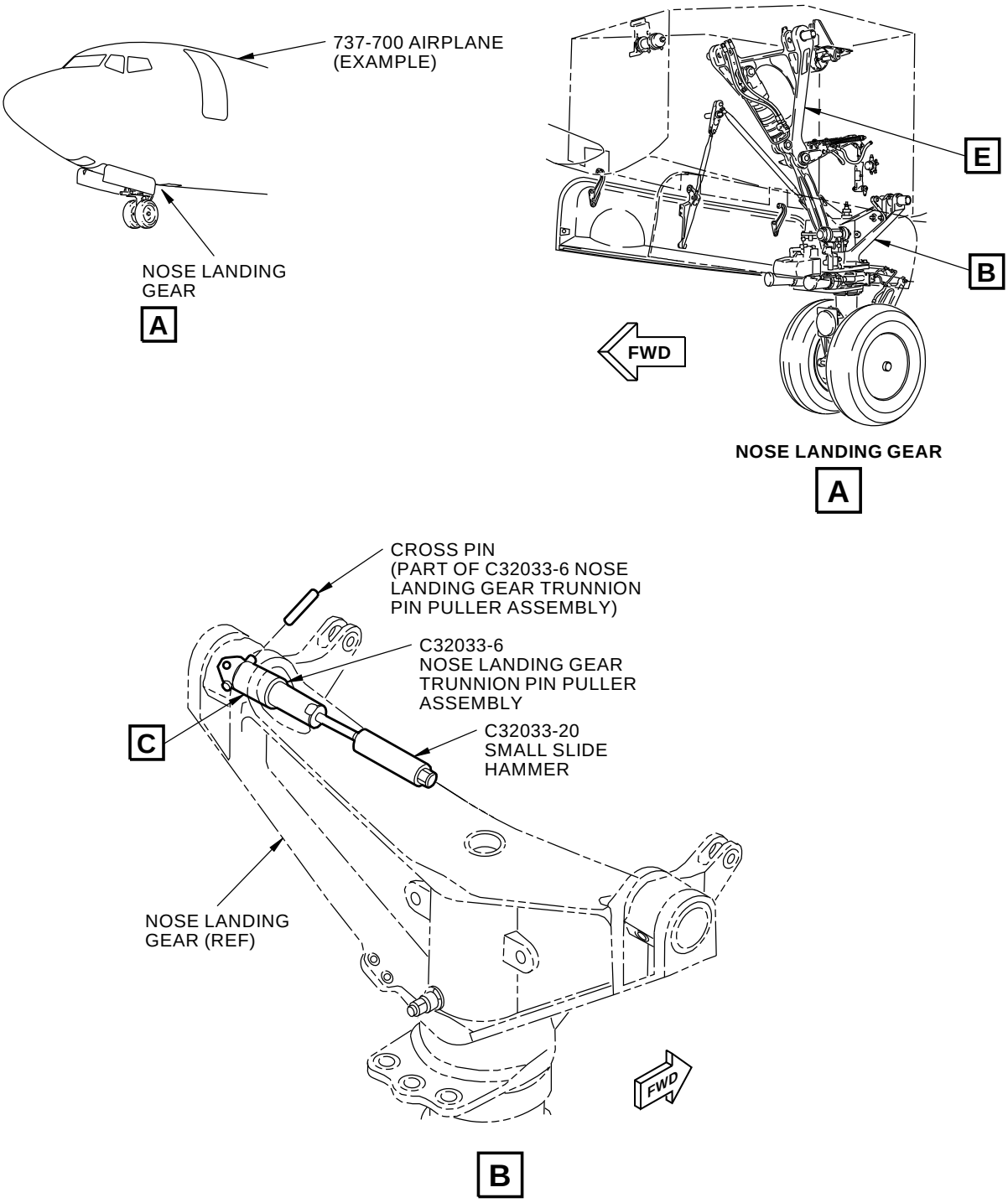

G85142 S0006831842_V4

Nose Landing Gear Trunnion Pin Removal/Installation Equipment
Figure 1 (Sheet 1 of 3)

BOEING PROPRIETARY - Copyright © Unpublished Work - See title page for details

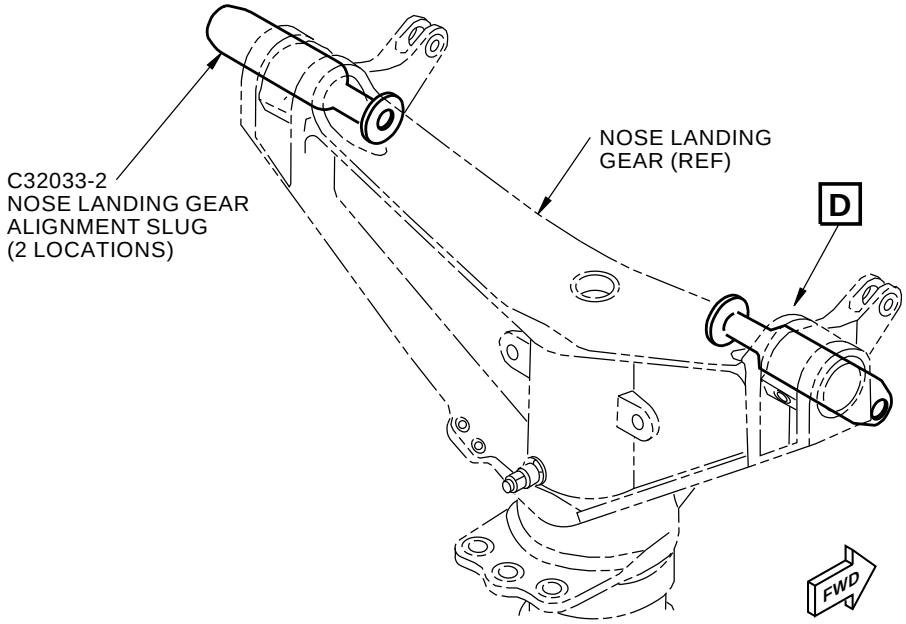

C

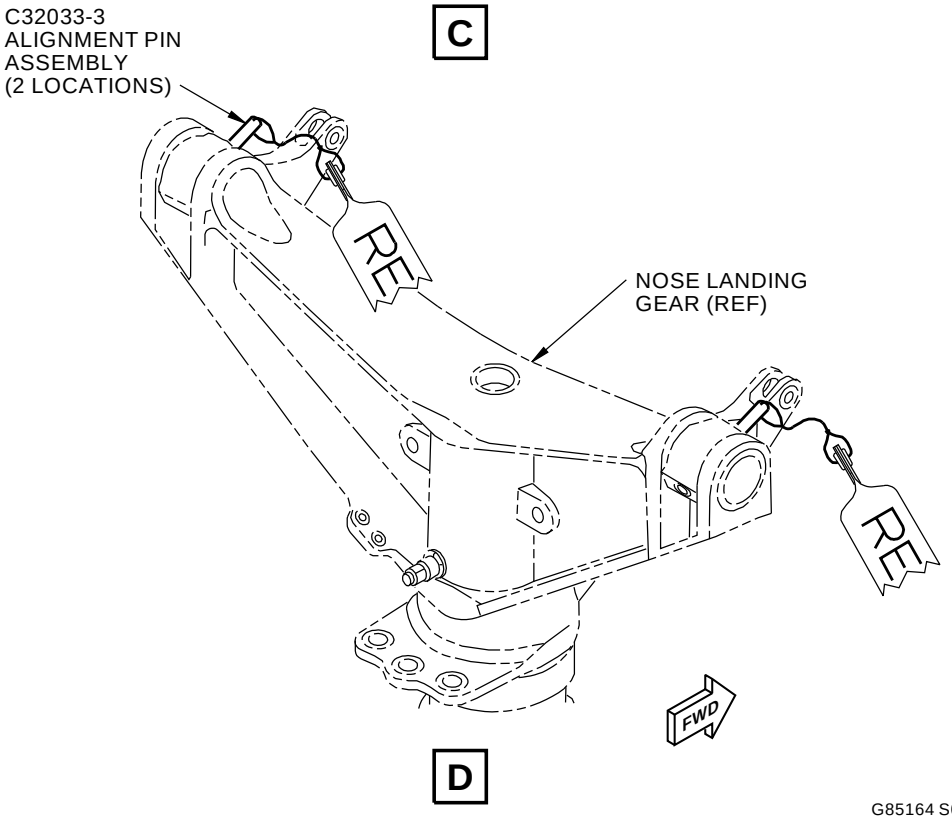

D

G85164 S0006831844_V4

Nose Landing Gear Trunnion Pin Removal/Installation Equipment
Figure 1 (Sheet 2 of 3)

BOEING PROPRIETARY - Copyright © Unpublished Work - See title page for details

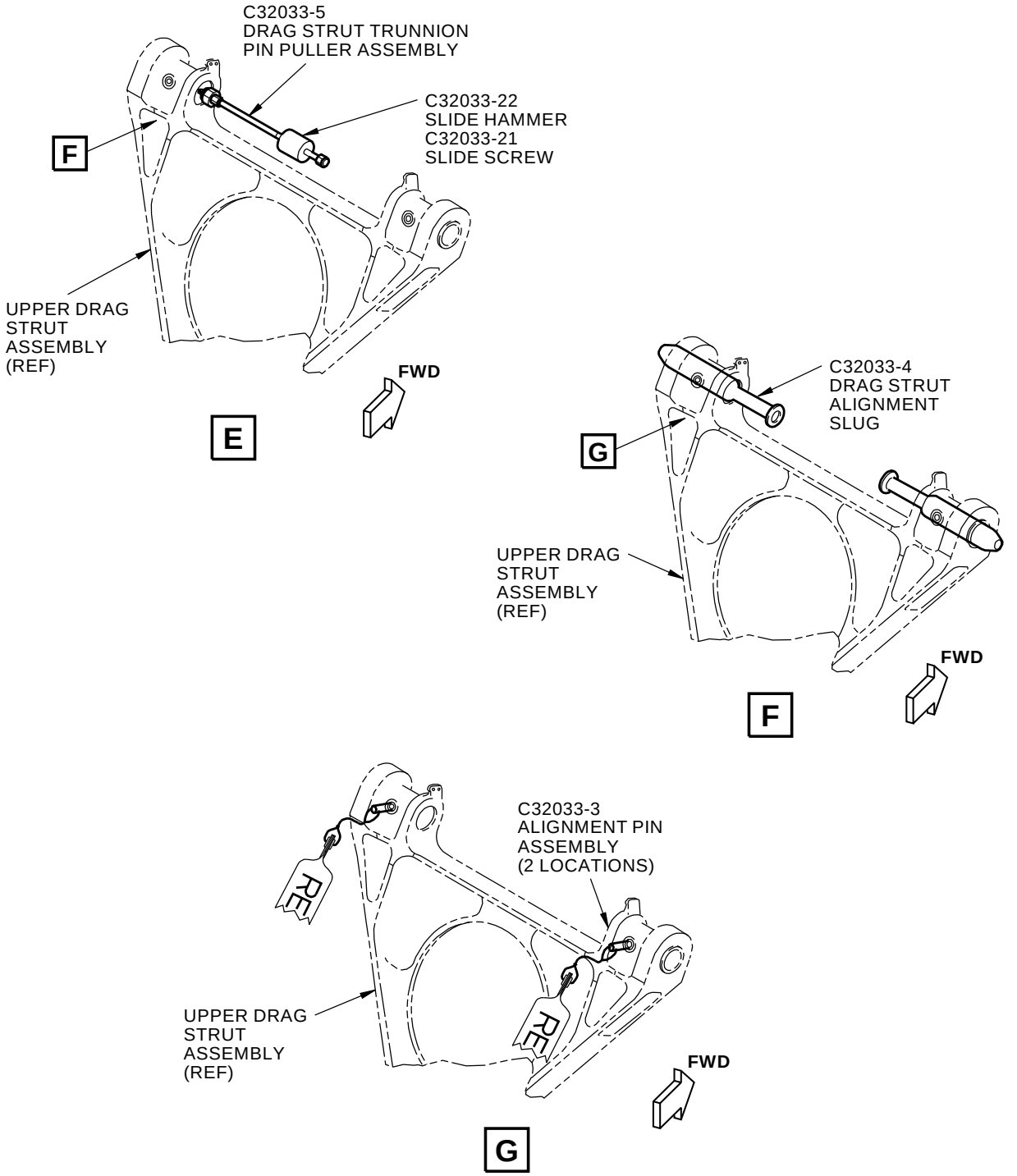

M49668 S0006831843_V4

Nose Landing Gear Trunnion Pin Removal/Installation Equipment
Figure 1 (Sheet 3 of 3)

BOEING PROPRIETARY - Copyright © Unpublished Work - See title page for details

PART NUMBER: C32016-33, -46

NAME: REMOVAL/INSTALLATION EQUIPMENT - NOSE LANDING GEAR LOWER SEALS

AIRPLANE MAINTENANCE: YES

AMM 32-21-11, AMM 32-21-24, AMM 32-51-61

COMPONENT MAINTENANCE: YES

CMM 32-21-12

USAGE & DESCRIPTION: The C32016-33 (option) or C32016-46 (preferred) removal /installation equipment is used on all 737 airplanes except 737-100 thru -500 airplanes.

C32016 is used in conjunction with a customer-furnished axle jack. C32016 is used to remove or install the nose landing gear shock strut seals. The C32016-33 may be reworked to a C32016-46. Refer to the current C32016 drawing for rework instructions.

The Figure 1 illustrates usage for scraper ring removal. The C32016-4 scraper retainers hold the scraper. The C32016-5 scraper lock assembly locks the C32016-4 scraper retainer. The gland nut, C32016-4 and -5 can then be slid down for removal.

The Figure 2 illustrates usage for removing a scraper ring that has become unseated in its groove in the lower bearing carrier, using the C32016-2 scraper plunger and the C32016-3 scraper reducers.

The Figure 3 shows seal replacement using the C32016-6 seal puller assembly, the C32016-11 thread protector, the C32016-21 thread protector halves, the C32016-32 puller screw assembly and the 751069-007 strap assembly. The C32016-6 seal puller assembly is used to replace the active dynamic seals with a spare seal without having to separate the inner cylinder from the outer cylinder. The C32016-11 thread protector assembly and the C32016-21 thread protector halves protect the seals from damage by the gland nut threads during installation.

The Figure 4 shows active dynamic seal replacement. The C32016-8 clamp assembly forms and retains the shape of the active dynamic seal. The C32016-7 ring seal stuffer installs the active dynamic seal. The 751069-007 strap assembly holds the thread protector assembly.

The Figure 5 illustrates usage of the C32016-45 seal dynamic guide. The C32016-45 dynamic seal guide protects and directs the active dynamic seal when mating the inner cylinder to the outer cylinder.

The Figure 6 illustrates the inner cylinder installation. The C32016-10 compressor assembly, together with the 751069-007 strap assembly, compresses the upper bearing, upper bearing carrier and recoil valve ring for installation into the inner cylinder.

The Figure 7 shows torsion link positioning. After the inner cylinder is mated to the outer cylinder, the torsion links must be connected at the apex. The C32016-13 skid plates, the 751069-007 strap assembly and a

BOEING PROPRIETARY - Copyright © Unpublished Work - See title page for details

customer furnished axle jack are used for positioning the torsion links.

The Figure 8shows the centering cam installation using the C32016-35 centering assembly and Figure 8 also shows the dynamic seal installation using the C32016-34 seal installer assemblies to drive the seal.

The Figure 9 illustrates the nose landing gear lower dynamic seal and excluder seal installation. C32016-55 seal retainer is placed over the inner cylinder and used to hold the dynamic seal in place. C32016-56 retainer pins and S-6188 rubber band are used to hold the C32016-55 seal retainer in place while the lower bearing carrier is installed using the C32016-47 ram assembly. C32016-49 excluder guide is placed on the lower bearing carrier and the C32016-48 excluder plunger is used to install the excluder seal into position on the lower bearing carrier.

Refer to AMM 32-21-11, AMM 32-21-24, AMM 32-51-61, CMM 32-21-12 and the current C32016 drawing for complete usage instructions.

C32016-33 and -46 consist of:

C32016-33		
QUANTITY	**NOMENCLATURE**	**PART NUMBER**
2	SCRAPER PLUNGER	C32016-2
2	SCRAPER REDUCER	C32016-3
2	SCRAPER RETAINER	C32016-4
1	SCRAPER LOCK ASSEMBLY	C32016-5
1	SEAL PULLER ASSEMBLY	C32016-6
2	DYNAMIC SEAL STUFFER	C32016-7
1	CLAMP ASSEMBLY	C32016-8
2	COMPRESSOR ASSEMBLY HALF	C32016-10
1	THREAD PROTECTOR ASSEMBLY	C32016-11
2	SKID PLATE	C32016-13
2	THREAD PROTECTOR HALF	C32016-21
2	PULLER SCREW	C32016-32
2	SEAL INSTALLER ASSEMBLY	C32016-34
1	CENTERING ASSEMBLY	C32016-35
1	DYNAMIC SEAL GUIDE	C32016-45
2	STRAP ASSEMBLY (751069-007)	C32016-59
1	STORAGE BOX	

C32016-46		
QUANTITY	**NOMENCLATURE**	**PART NUMBER**
2	SCRAPER PLUNGERS	C32016-2
2	SCRAPER REDUCERS	C32016-3
2	SCRAPER RETAINERS	C32016-4
1	SCRAPER LOCK ASSEMBLY	C32016-5

BOEING PROPRIETARY - Copyright © Unpublished Work - See title page for details

(Continued)

C32016-46		
QUANTITY	NOMENCLATURE	PART NUMBER
1	SEAL PULLER ASSEMBLY	C32016-6
2	DYNAMIC SEAL STUFFERS	C32016-7
1	CLAMP ASSEMBLY	C32016-8
2	COMPRESSOR ASSEMBLY HALF	C32016-10
1	THREAD PROTECTOR ASSEMBLY	C32016-11
2	SKID PLATE	C32016-13
2	THREAD PROTECTOR HALF	C32016-21
2	PULLER SCREW	C32016-32
2	SEAL INSTALLER ASSEMBLY	C32016-34
1	CENTERING ASSEMBLY	C32016-35
1	DYNAMIC SEAL GUIDE	C32016-45
1	RAM ASSEMBLY	C32016-47
1	EXCLUDER PLUNGER	C32016-48
1	EXCLUDER GUIDE	C32016-49
1	SEAL RETAINER	C32016-55
2	RETAINER PIN	C32016-56
1	RUBBER BAND (S-6188)	C32016-58
2	STRAP ASSEMBLY (751069-007)	C32016-59
1	STORAGE BOX	

WEIGHT: C32016-33 - 22 lbs (10 kg)
C32016-46 - 42 lbs (19 kg)

DIMENSIONS: C32016-33 - 25 x 15 x 7 inches (635 x 381 x 178 mm)
C32016-46 - 29 x 21 x 7 inches (737 x 533 x 178 mm)

NOTE: C32016-46 replaces C32016-33 for future procurement.
C32016-33 supersedes C32016-1.

BOEING PROPRIETARY - Copyright © Unpublished Work - See title page for details

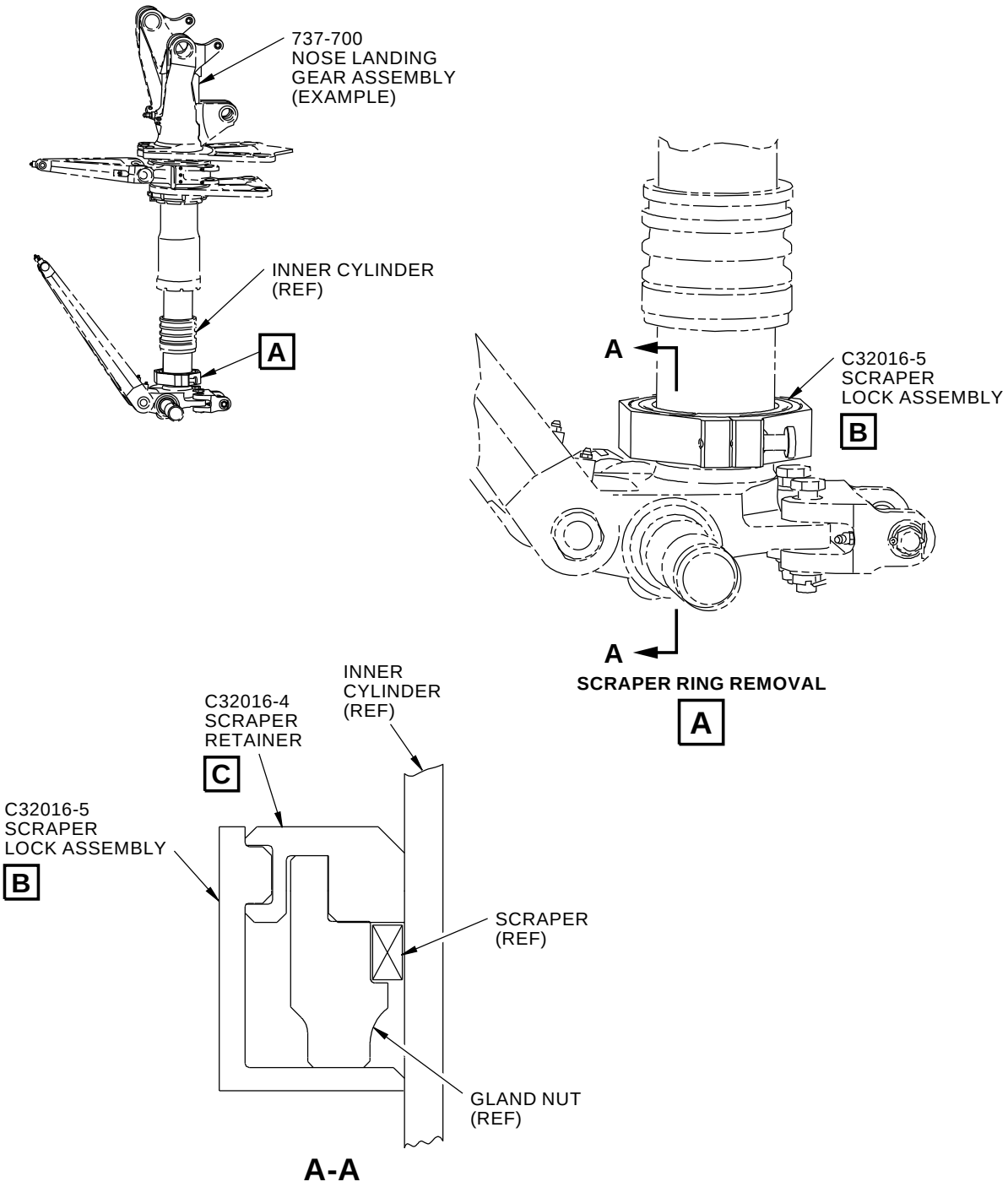

H71821 S0006831851_V4

Nose Landing Gear Lower Seals Removal/Installation Equipment
Figure 1 (Sheet 1 of 2)

BOEING PROPRIETARY - Copyright © Unpublished Work - See title page for details

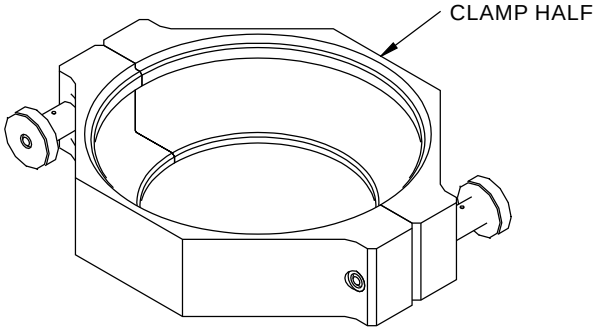

C32016-5
SCRAPER LOCK ASSEMBLY

B

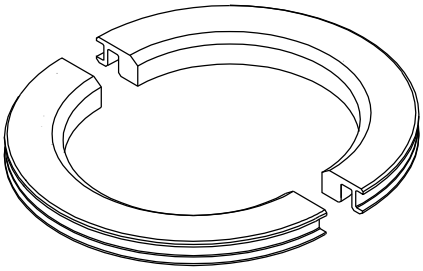

C32016-4
SCRAPER RETAINER

C

2422332 S0000560276_V1

Nose Landing Gear Lower Seals Removal/Installation Equipment
Figure 1 (Sheet 2 of 2)

BOEING PROPRIETARY - Copyright © Unpublished Work - See title page for details

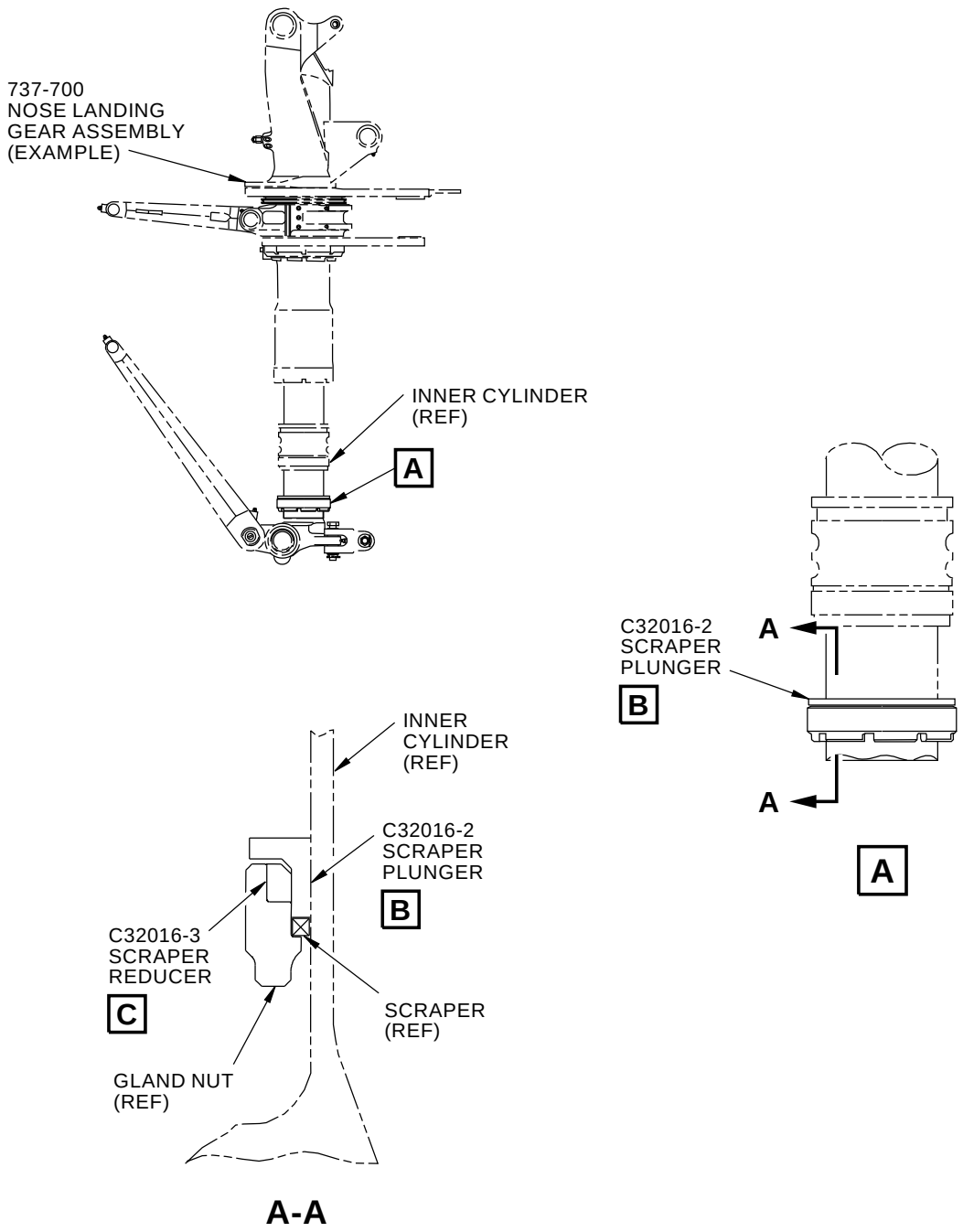

UNSEATED SCRAPER RING REMOVAL

H71875 S0006831852_V4

Nose Landing Gear Lower Seals Removal/Installation Equipment
Figure 2 (Sheet 1 of 2)

BOEING PROPRIETARY - Copyright © Unpublished Work - See title page for details

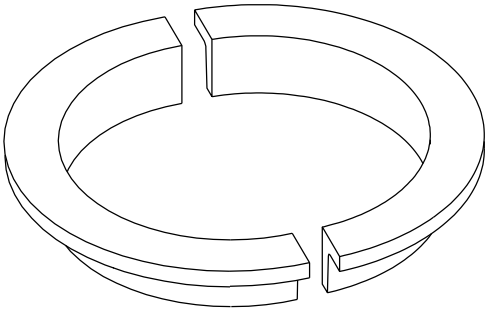

C32016-2
SCRAPER PLUNGER

B

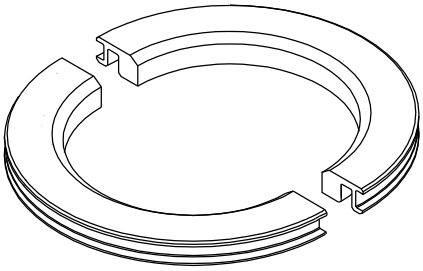

C32016-4
SCRAPER RETAINER

C

2422749 S0000560277_V1

Nose Landing Gear Lower Seals Removal/Installation Equipment
Figure 2 (Sheet 2 of 2)

BOEING PROPRIETARY - Copyright © Unpublished Work - See title page for details

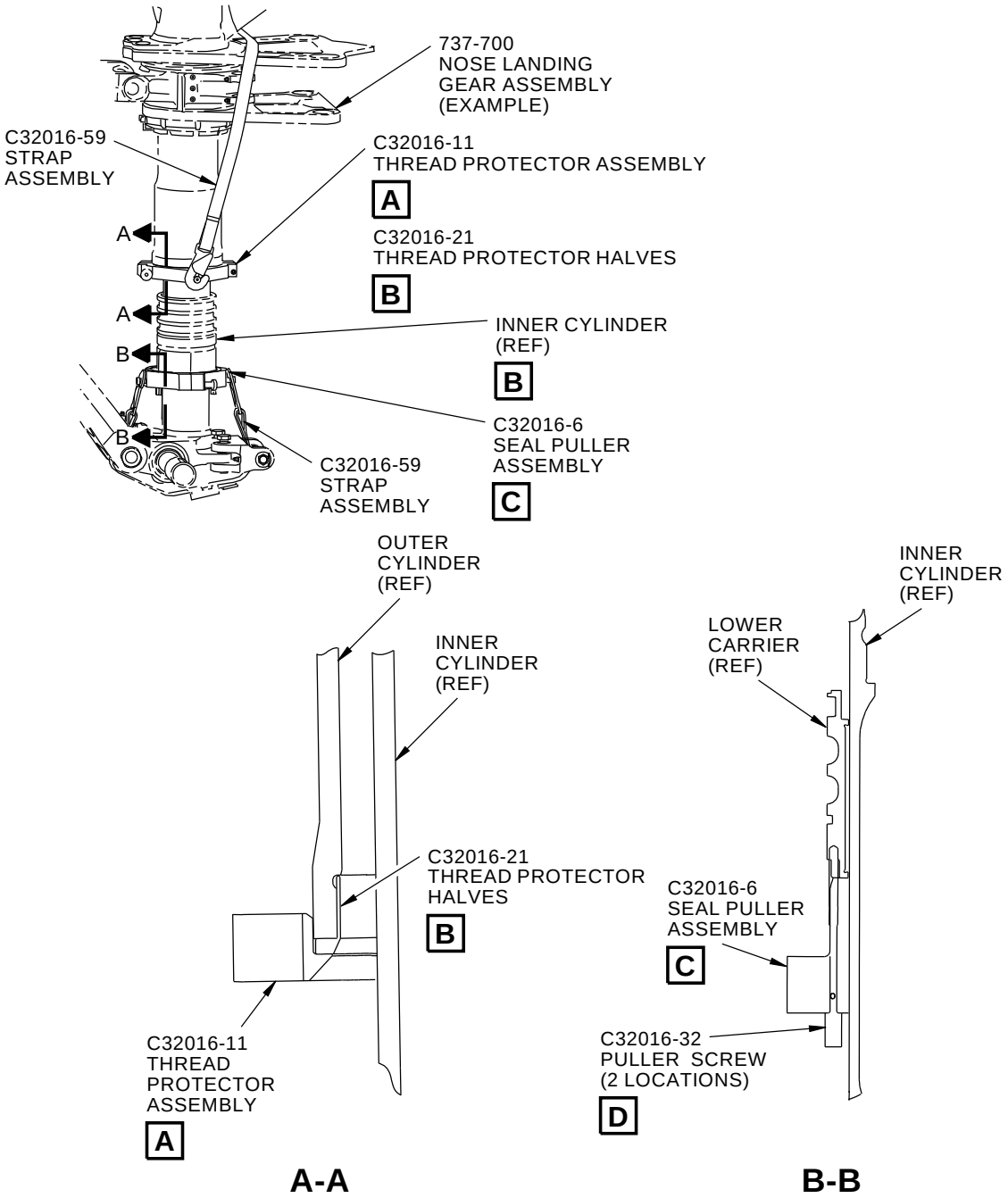

SEAL REPLACEMENT

H71797 S0006831853_V4

Nose Landing Gear Lower Seals Removal/Installation Equipment
Figure 3 (Sheet 1 of 2)

BOEING PROPRIETARY - Copyright © Unpublished Work - See title page for details

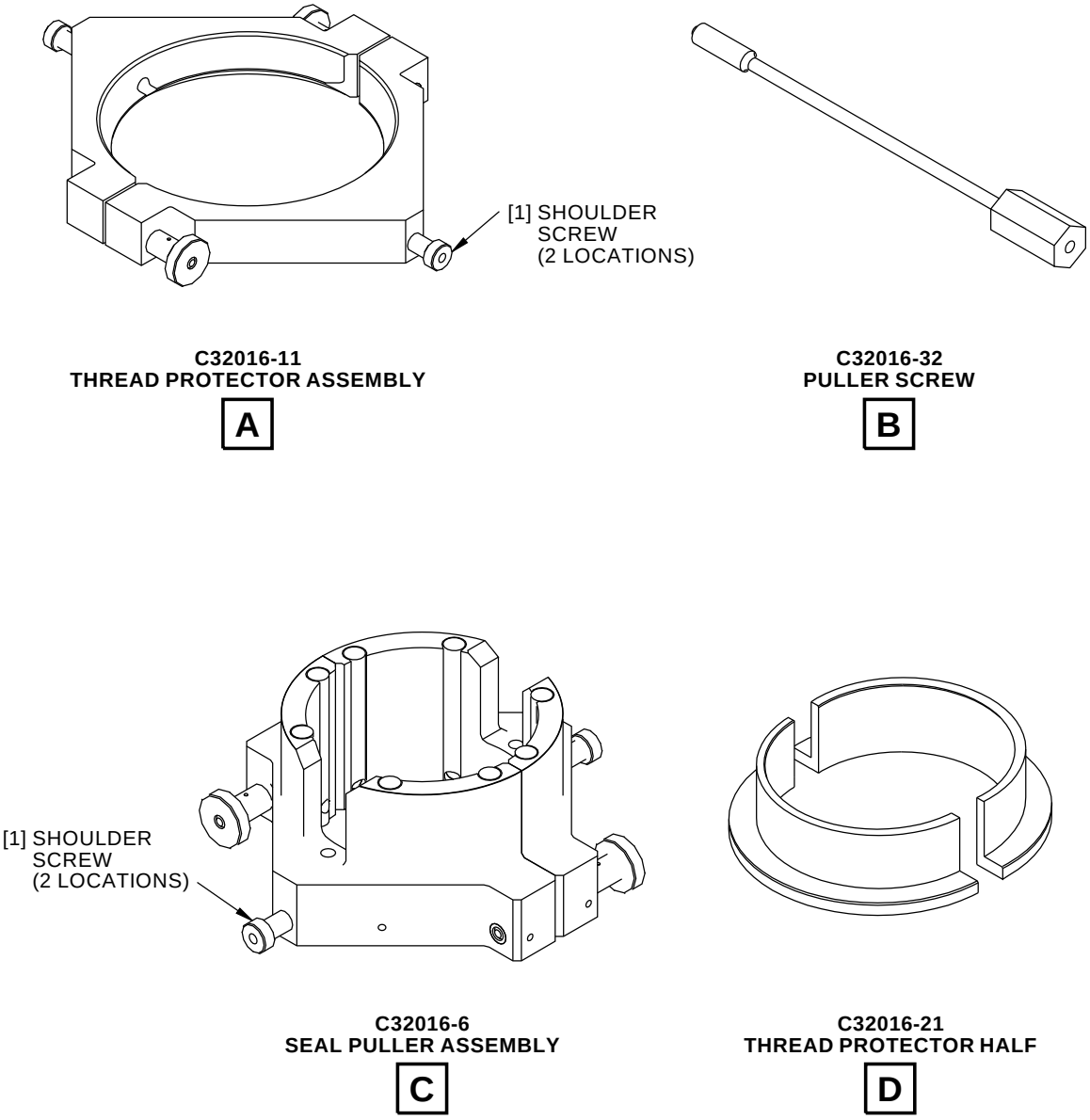

2423128 S0000560278_V1

Nose Landing Gear Lower Seals Removal/Installation Equipment
Figure 3 (Sheet 2 of 2)

BOEING PROPRIETARY - Copyright © Unpublished Work - See title page for details

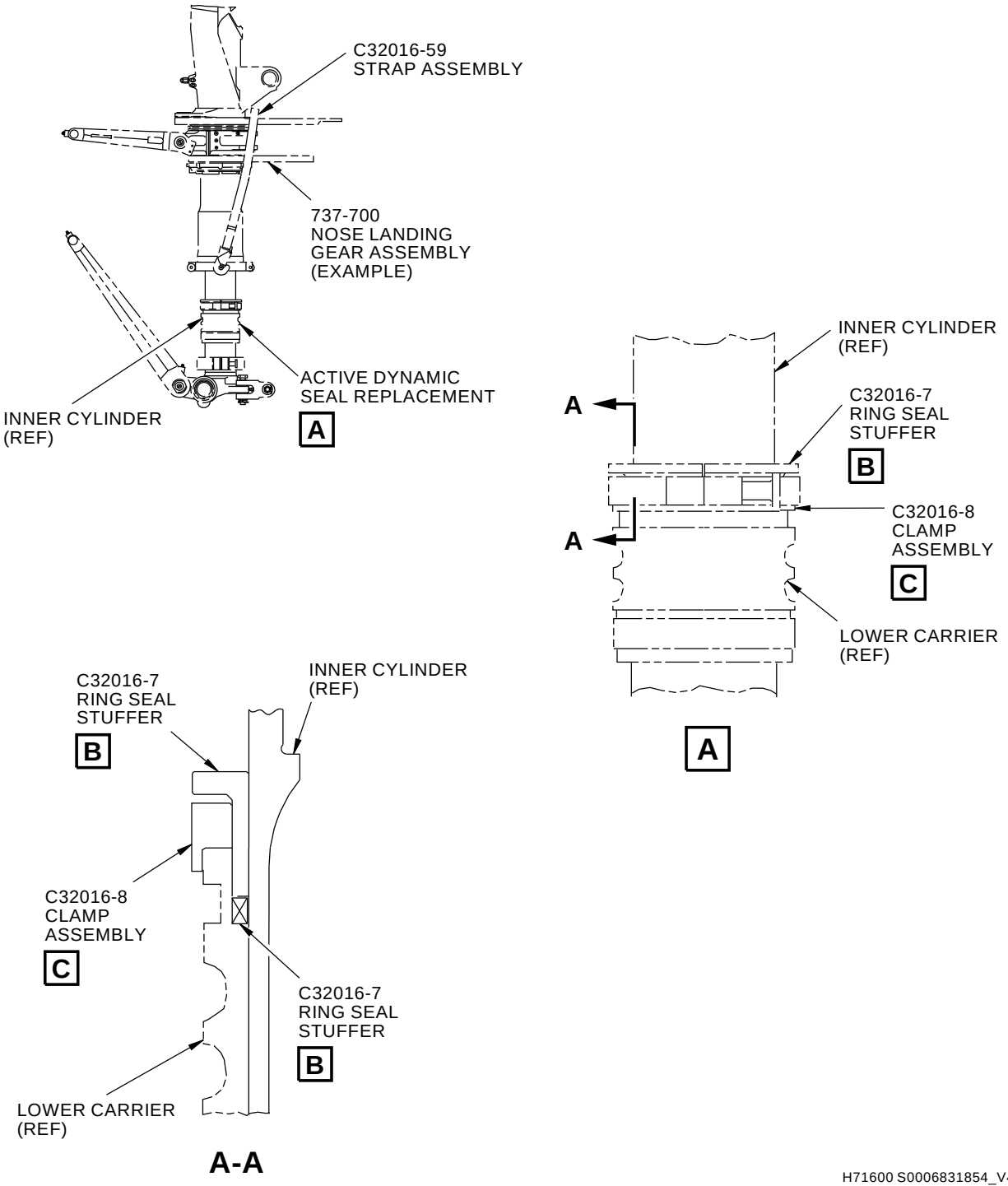

H71600 S0006831854_V4

Nose Landing Gear Lower Seals Removal/Installation Equipment
Figure 4 (Sheet 1 of 2)

BOEING PROPRIETARY - Copyright © Unpublished Work - See title page for details

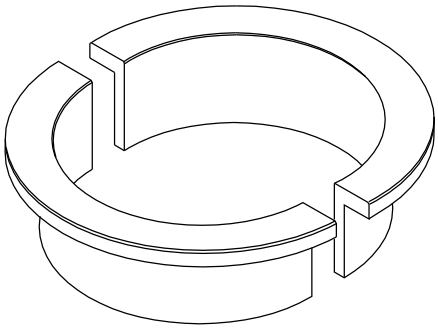

C32016-7
RING SEAL STUFFER

B

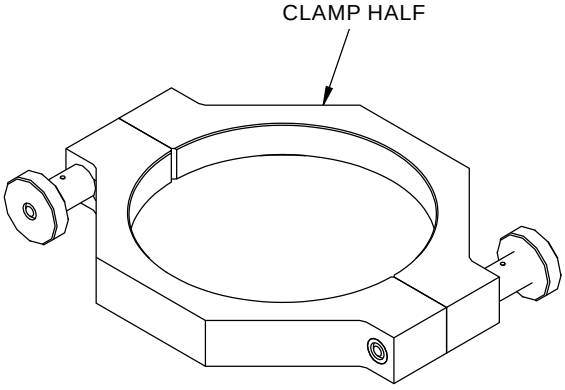

C32016-8
CLAMP ASSEMBLY

C

2423147 S0000560279_V1

Nose Landing Gear Lower Seals Removal/Installation Equipment
Figure 4 (Sheet 2 of 2)

BOEING PROPRIETARY - Copyright © Unpublished Work - See title page for details

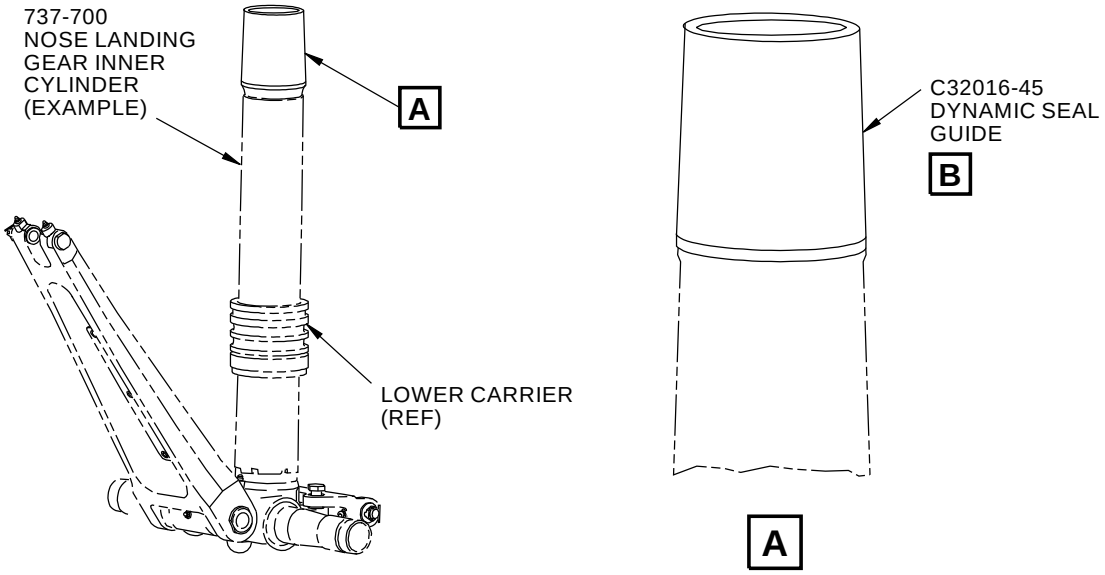

ACTIVE DYNAMIC SEAL REPLACEMENT

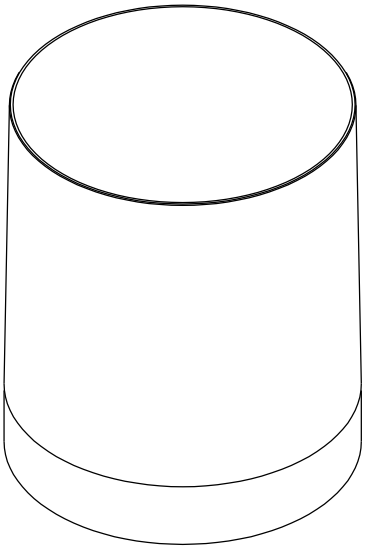

C32016-45
DYNAMIC SEAL GUIDE

B

H71604 S0006831855_V5

Nose Landing Gear Lower Seals Removal/Installation Equipment
Figure 5

BOEING PROPRIETARY - Copyright © Unpublished Work - See title page for details

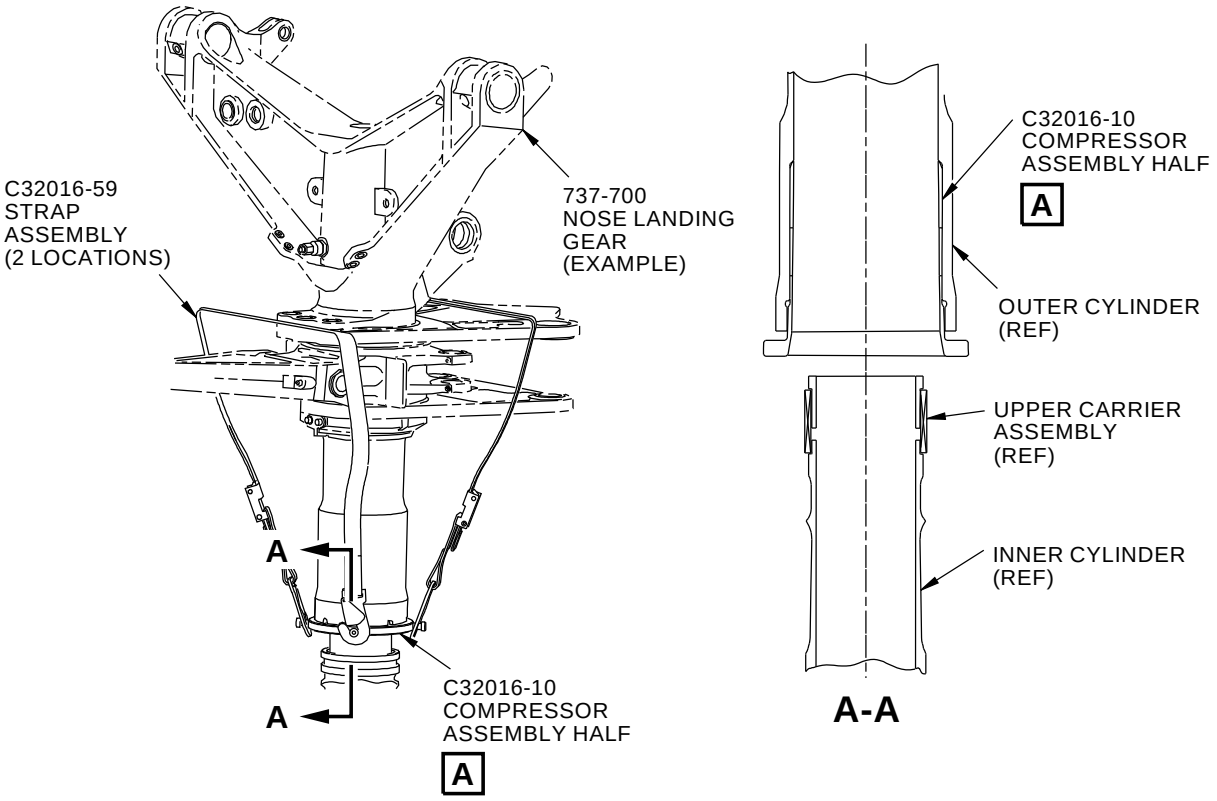

INNER CYLINDER INSTALLATION

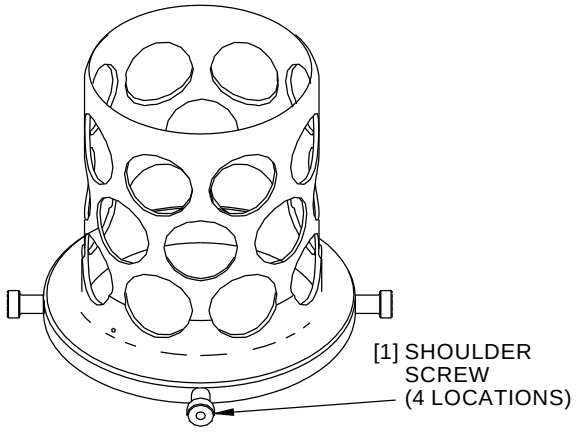

C32016-10
COMPRESSOR ASSEMBLY HALVES

A

H71557 S0006831856_V4

Nose Landing Gear Lower Seals Removal/Installation Equipment
Figure 6

BOEING PROPRIETARY - Copyright © Unpublished Work - See title page for details

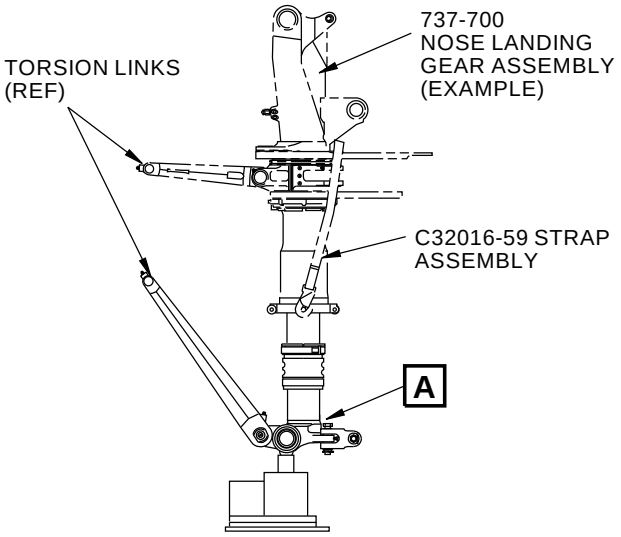

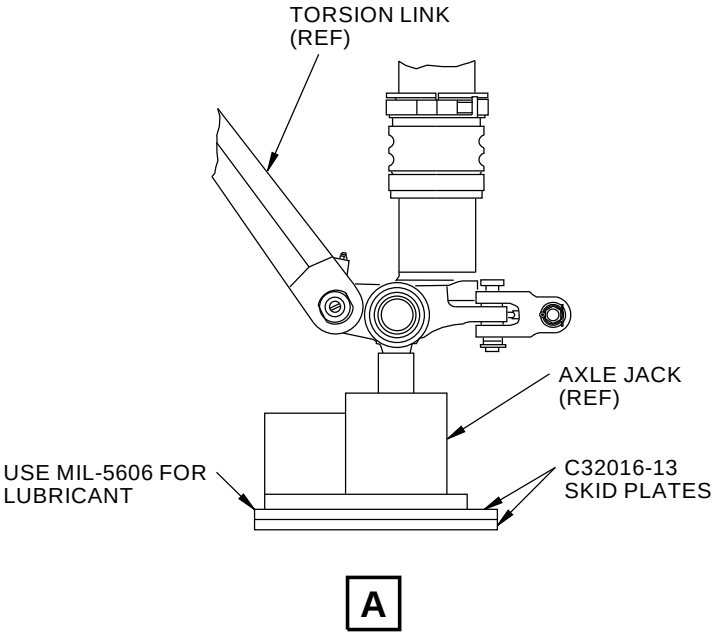

TORSION LINK POSITIONING

H71703 S0006831857_V4

Nose Landing Gear Lower Seals Removal/Installation Equipment
Figure 7

BOEING PROPRIETARY - Copyright © Unpublished Work - See title page for details

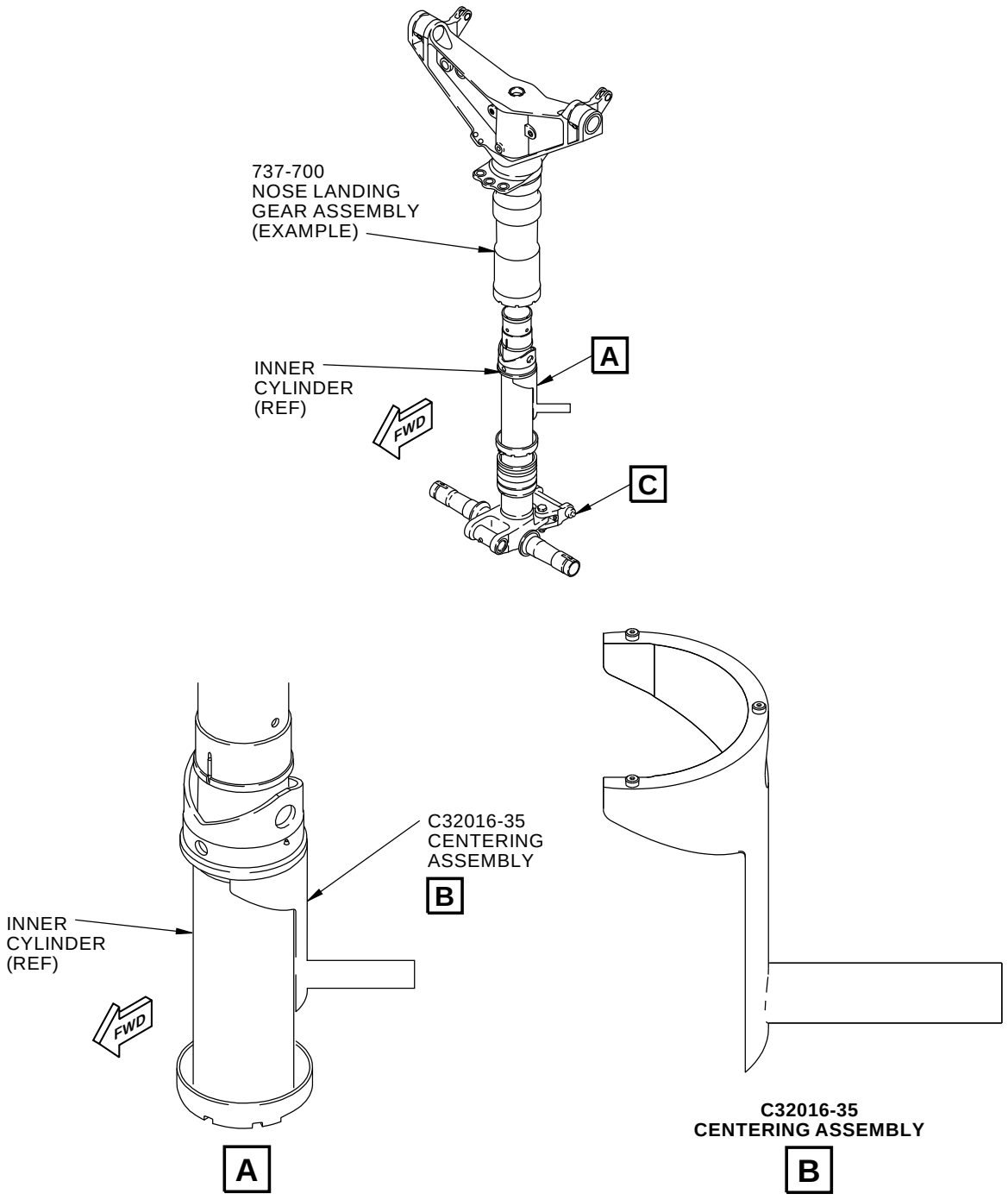

W26894 S0006831858_V6

Nose Landing Gear Lower Seals Removal/Installation Equipment
Figure 8 (Sheet 1 of 2)

BOEING PROPRIETARY - Copyright © Unpublished Work - See title page for details

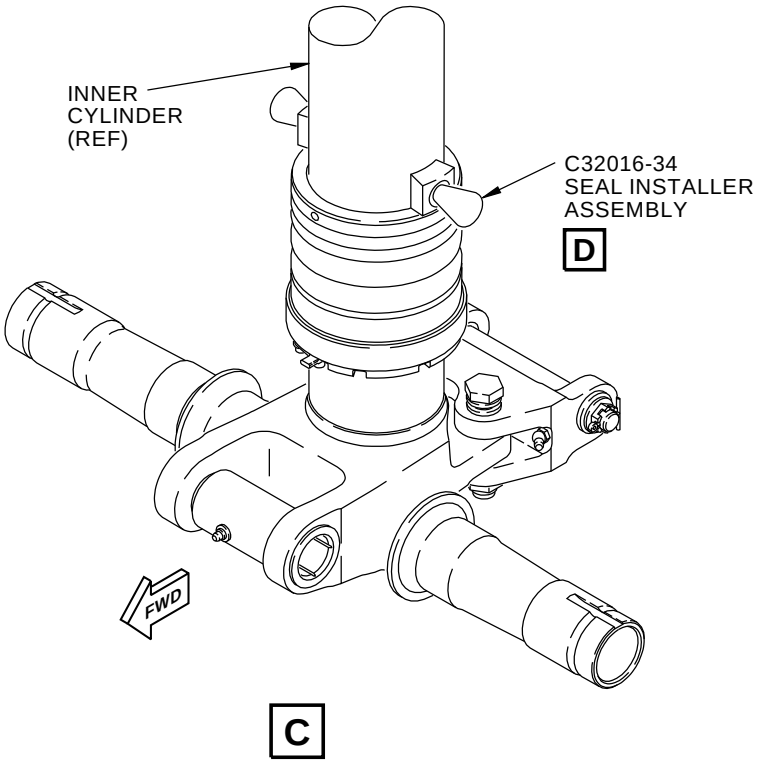

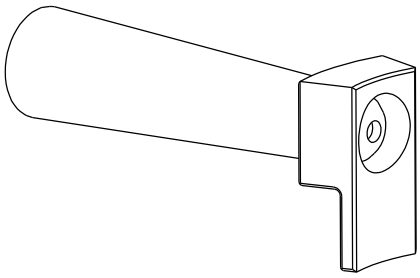

C32016-34
SEAL INSTALLER ASSEMBLY

D

2423464 S0000560290_V1

Nose Landing Gear Lower Seals Removal/Installation Equipment
Figure 8 (Sheet 2 of 2)

BOEING PROPRIETARY - Copyright © Unpublished Work - See title page for details

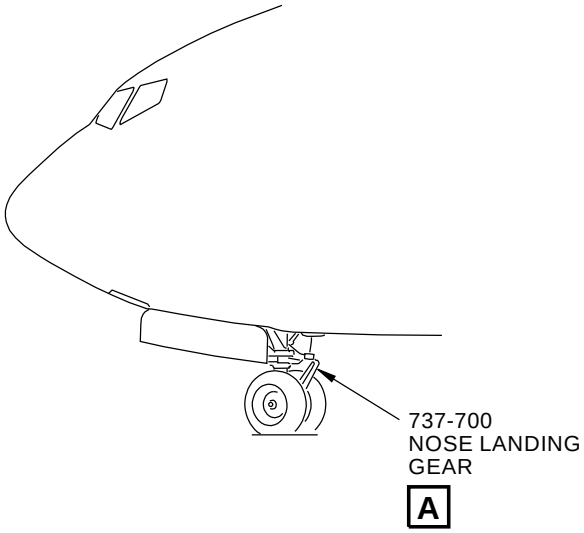

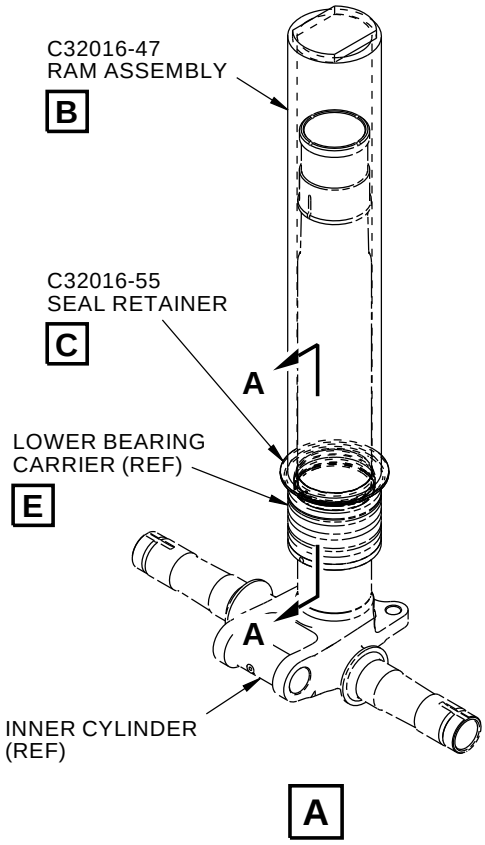

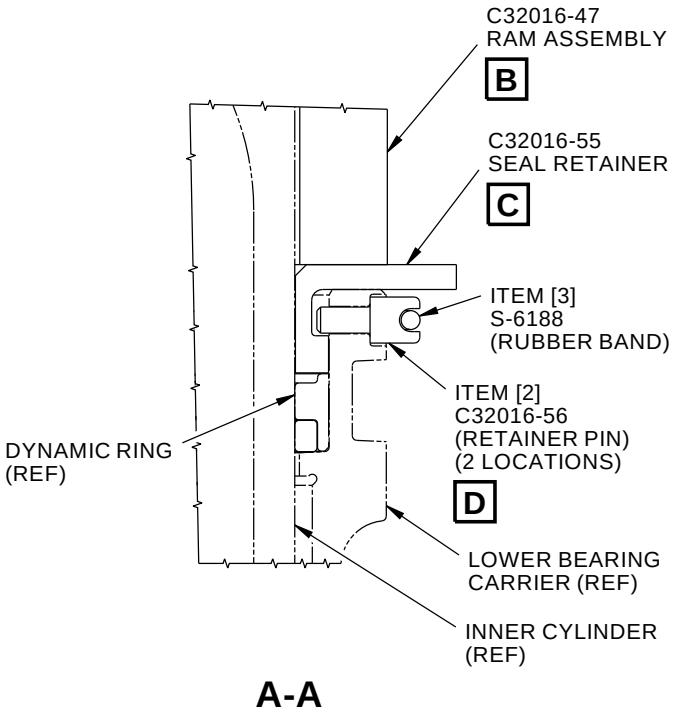

1848771 S0000328758_V2

Nose Landing Gear Lower Seals Removal/Installation Equipment
Figure 9 (Sheet 1 of 4)

BOEING PROPRIETARY - Copyright © Unpublished Work - See title page for details

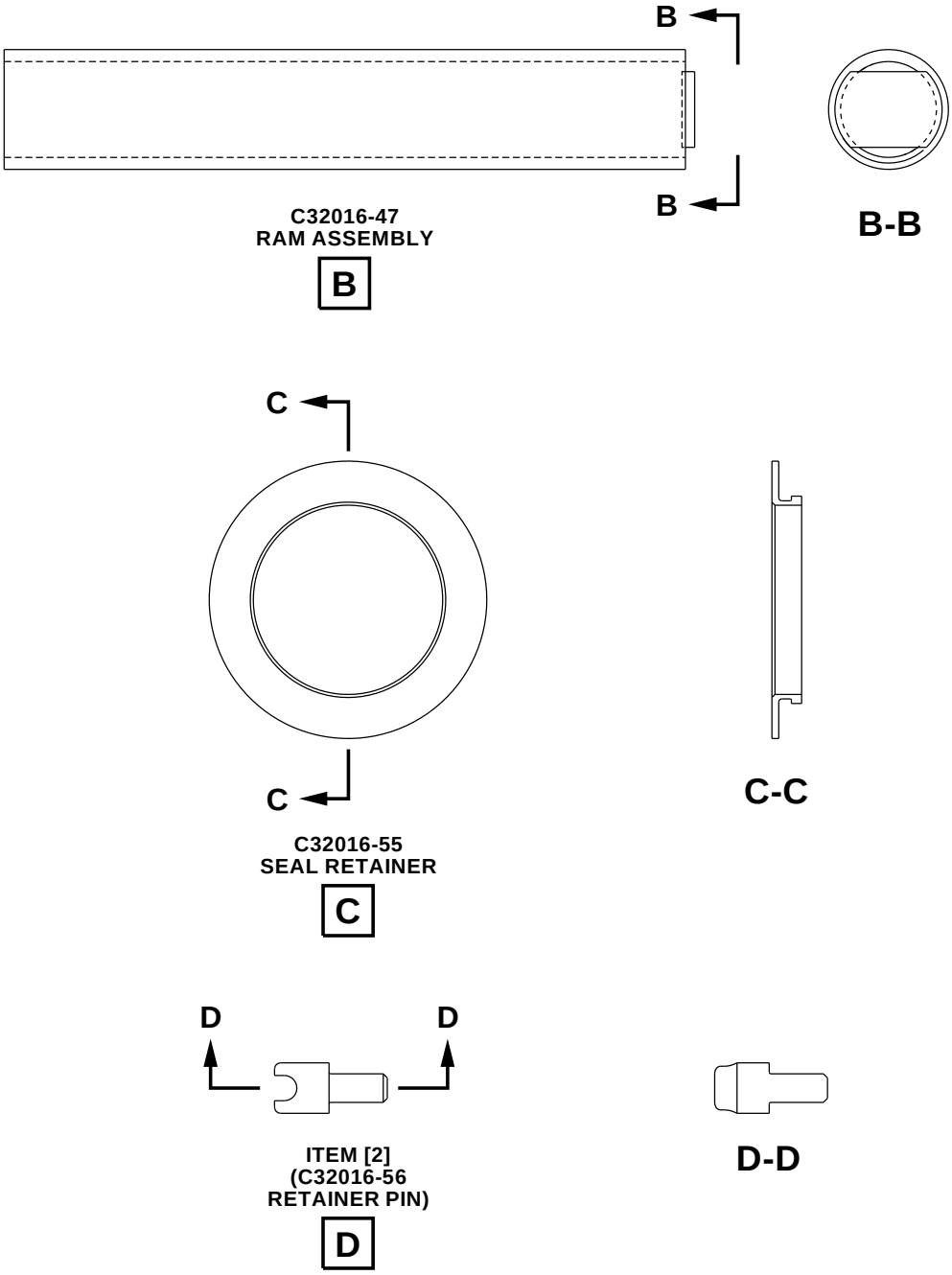

1848772 S0000328759_V2

Nose Landing Gear Lower Seals Removal/Installation Equipment
Figure 9 (Sheet 2 of 4)

BOEING PROPRIETARY - Copyright © Unpublished Work - See title page for details

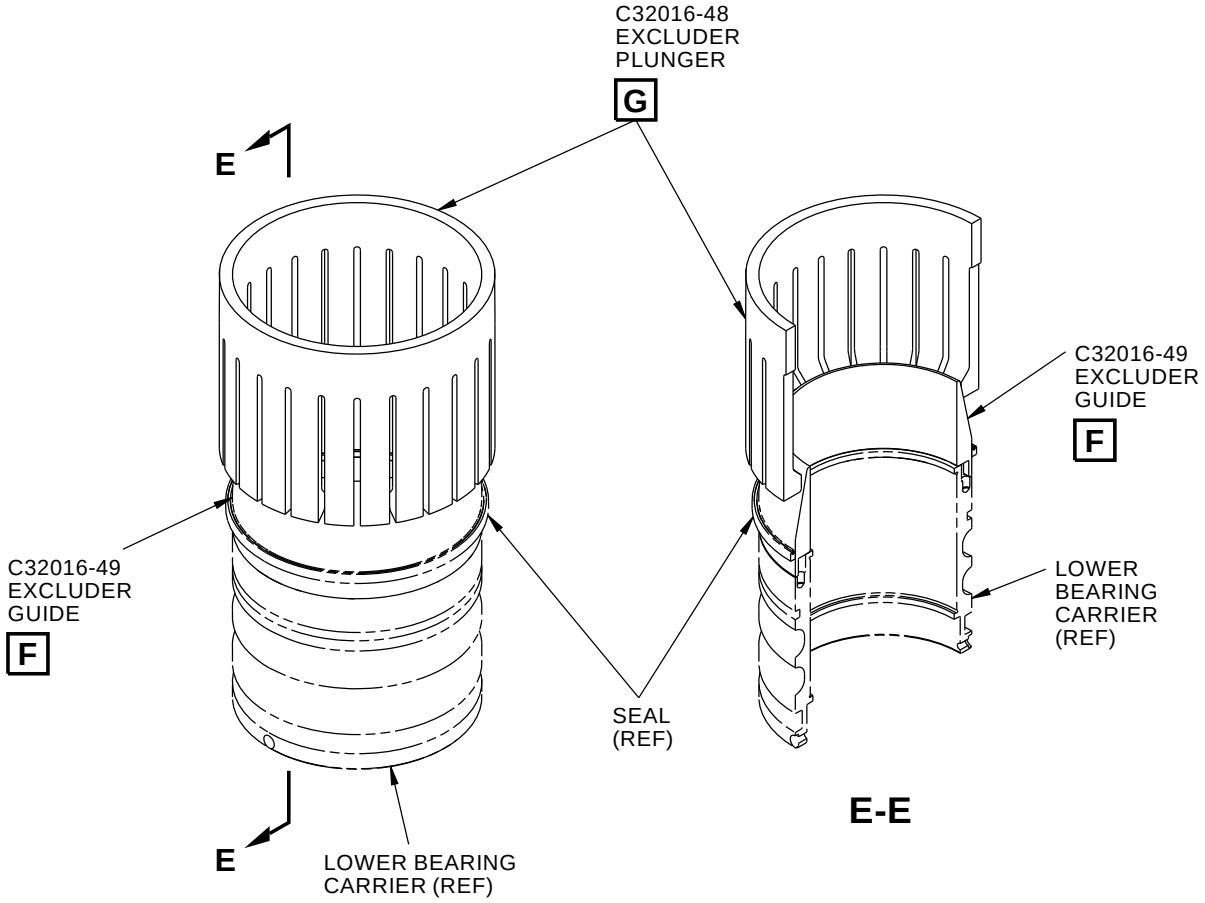

LOWER BEARING CARRIER

E

1848778 S0000328760_V2

Nose Landing Gear Lower Seals Removal/Installation Equipment
Figure 9 (Sheet 3 of 4)

BOEING PROPRIETARY - Copyright © Unpublished Work - See title page for details

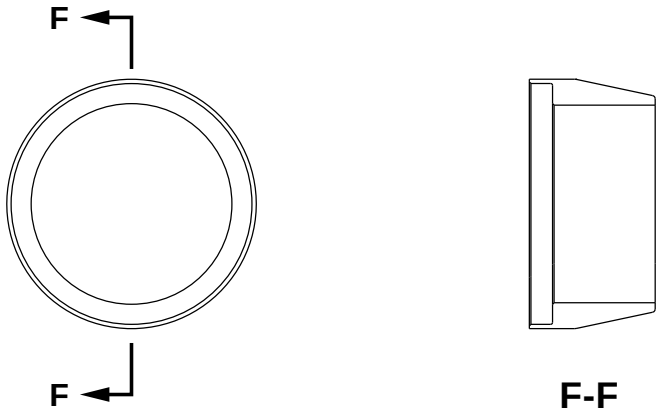

C32016-49
EXCLUDER GUIDE

F

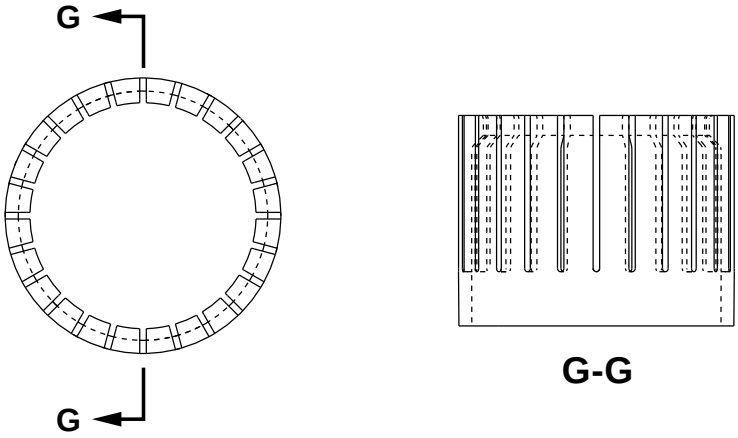

C32016-48
EXCLUDER PLUNGER

G

1848779 S0000328761_V2

Nose Landing Gear Lower Seals Removal/Installation Equipment
Figure 9 (Sheet 4 of 4)

BOEING PROPRIETARY - Copyright © Unpublished Work - See title page for details

REPAIRABLE/REPLACEABLE PARTS			
ITEM NUMBER	PART NUMBER	NOMENCLATURE	VENDOR CODE
[1]	PZ-40	SHOULDER SCREW	0PJ20
[2]	C32016-56	RETAINER PIN	- - -
[3]	S-6188	RUBBER BAND	7Z049

BOEING PROPRIETARY - Copyright © Unpublished Work - See title page for details

PART NUMBER: F72959-1, -2, -3, -4, -5, -6, -7, -8, -9, -10, -11, -12, -31, -32, -33, -34, -35, -36, -37, -38, -39, -40, -41, -42

NAME: SPANNER WRENCH - AN STANDARD TYPE

AIRPLANE MAINTENANCE: YES

AMM 32-21-00, AMM 32-51-31

COMPONENT MAINTENANCE: YES

CMM 32-30-21, CMM 32-30-31

USAGE & DESCRIPTION: The F72959 series of spanner wrenches are used on all 737 airplanes

F72959 is used to provide a full range of standard AN spanner sizes for maintenance and overhaul applications. F72959-1 is replaceable to F72959-31, F72959-2 is replaceable to F72959-32 . . . F72959-12 is replaceable to F72959-42. F72959-1 thru F72959-12 are fabricated from AN standard hardware, F72959-31 thru F72959-42 are manufactured from the F72959 drawing. Twelve wrench dash numbers (F72959-1 thru F72959-12 and the replacements F72959-31 thru F72959-42) cover a diameter range of 0.75 to 6.00 inches. F72959 dash numbers F72959-1 thru F72959-4 and F72959-31 thru F72959-33 and F72959-40 are 3/8-inch square drive. All others are 1/2-inch square drive.

Refer to AMM 32-21-00, AMM 32-51-31, CMM 32-30-21, CMM 32-30-31 and the current F72959 drawing for complete usage instructions.

Each F72959 dash number comprises one complete spanner wrench, consisting of three parts, a wrench handle, a pin arm and a bolt. A typical F72959 spanner wrench is shown in Figure 1.

The F72959 series consist of:

F72959-1		
QUANTITY	**NOMENCLATURE**	**PART NUMBER**
1	WRENCH HANDLE	F72959-43
1	BOLT	F72959-44
1	0.09-INCH PIN ARM	F72959-45

F72959-2		
QUANTITY	**NOMENCLATURE**	**PART NUMBER**
1	WRENCH HANDLE	F72959-43
1	BOLT	F72959-44
1	0.12-INCH PIN ARM	F72959-46

F72959-3		
QUANTITY	**NOMENCLATURE**	**PART NUMBER**
1	WRENCH HANDLE	F72959-43
1	BOLT	F72959-44

BOEING PROPRIETARY - Copyright © Unpublished Work - See title page for details

(Continued)

F72959-3		
QUANTITY	NOMENCLATURE	PART NUMBER
1	0.19-INCH PIN ARM	F72959-47

F72959-4		
QUANTITY	NOMENCLATURE	PART NUMBER
1	WRENCH HANDLE	F72959-43
1	BOLT	F72959-44
1	KEY ARM	F72959-48

F72959-5		
QUANTITY	NOMENCLATURE	PART NUMBER
1	WRENCH HANDLE	F72959-49
1	BOLT	F72959-50
1	0.16-INCH PIN ARM	F72959-51

F72959-6		
QUANTITY	NOMENCLATURE	PART NUMBER
1	WRENCH HANDLE	F72959-49
1	BOLT	F72959-50
1	0.25-INCH PIN ARM	F72959-52

F72959-7		
QUANTITY	NOMENCLATURE	PART NUMBER
1	WRENCH HANDLE	F72959-49
1	BOLT	F72959-50
1	0.31-INCH PIN ARM	F72959-53

F72959-8		
QUANTITY	NOMENCLATURE	PART NUMBER
1	WRENCH HANDLE	F72959-49
1	BOLT	F72959-50
1	KEY ARM	F72959-54

F72959-9		
QUANTITY	NOMENCLATURE	PART NUMBER
1	WRENCH HANDLE	F72959-55
1	BOLT	F72959-56
1	0.22-INCH PIN ARM	F72959-57

BOEING PROPRIETARY - Copyright © Unpublished Work - See title page for details

F72959-10		
QUANTITY	NOMENCLATURE	PART NUMBER
1	WRENCH HANDLE	F72959-55
1	BOLT	F72959-56
1	0.31-INCH PIN ARM	F72959-58

F72959-11		
QUANTITY	NOMENCLATURE	PART NUMBER
1	WRENCH HANDLE	F72959-55
1	BOLT	F72959-56
1	0.38-INCH PIN ARM	F72959-59

F72959-12		
QUANTITY	NOMENCLATURE	PART NUMBER
1	WRENCH HANDLE	F72959-55
1	BOLT	F72959-56
1	KEY ARM	F72959-60

F72959-31		
QUANTITY	NOMENCLATURE	PART NUMBER
1	WRENCH HANDLE	F72959-13
1	SHOULDER BOLT	F72959-28
1	0.09-INCH DIAMETER PIN ARM	F72959-16

F72959-32		
QUANTITY	NOMENCLATURE	PART NUMBER
1	WRENCH HANDLE	F72959-13
1	SHOULDER BOLT	F72959-28
1	0.12-INCH DIAMETER PIN ARM	F72959-17

F72959-33		
QUANTITY	NOMENCLATURE	PART NUMBER
1	WRENCH HANDLE	F72959-13
1	SHOULDER BOLT	F72959-28
1	0.19-INCH DIAMETER PIN ARM	F72959-18

F72959-34		
QUANTITY	NOMENCLATURE	PART NUMBER
1	WRENCH HANDLE	F72959-14
1	SHOULDER BOLT	F72959-29
1	0.16-INCH DIAMETER PIN ARM	F72959-19

BOEING PROPRIETARY - Copyright © Unpublished Work - See title page for details

F72959-35		
QUANTITY	NOMENCLATURE	PART NUMBER
1	WRENCH HANDLE	F72959-14
1	SHOULDER BOLT	F72959-29
1	0.125-INCH DIAMETER PIN ARM	F72959-20

F72959-36		
QUANTITY	NOMENCLATURE	PART NUMBER
1	WRENCH HANDLE	F72959-14
1	SHOULDER BOLT	F72959-29
1	0.31-INCH DIAMETER PIN ARM	F72959-21

F72959-37		
QUANTITY	NOMENCLATURE	PART NUMBER
1	WRENCH HANDLE	F72959-15
1	SHOULDER BOLT	F72959-30
1	0.22-INCH DIAMETER PIN ARM	F72959-22

F72959-38		
QUANTITY	NOMENCLATURE	PART NUMBER
1	WRENCH HANDLE	F72959-15
1	SHOULDER BOLT	F72959-30
1	0.31-INCH DIAMETER PIN ARM	F72959-23

F72959-39		
QUANTITY	NOMENCLATURE	PART NUMBER
1	WRENCH HANDLE	F72959-15
1	SHOULDER BOLT	F72959-30
1	0.38-INCH DIAMETER PIN ARM	F72959-24

F72959-40		
QUANTITY	NOMENCLATURE	PART NUMBER
1	WRENCH HANDLE	F72959-13
1	SHOULDER BOLT	F72959-28
1	KEY TYPE ARM	F72959-25

F72959-41		
QUANTITY	NOMENCLATURE	PART NUMBER
1	WRENCH HANDLE	F72959-14
1	SHOULDER BOLT	F72959-29
1	KEY TYPE ARM	F72959-26

BOEING PROPRIETARY - Copyright © Unpublished Work - See title page for details

F72959-42		
QUANTITY	NOMENCLATURE	PART NUMBER
1	WRENCH HANDLE	F72959-15
1	SHOULDER BOLT	F72959-30
1	KEY TYPE ARM	F72959-27

NOTE: F72959-31 thru -42 replaces F72959-1 thru -12 respectively, for future procurement.

BOEING PROPRIETARY - Copyright © Unpublished Work - See title page for details

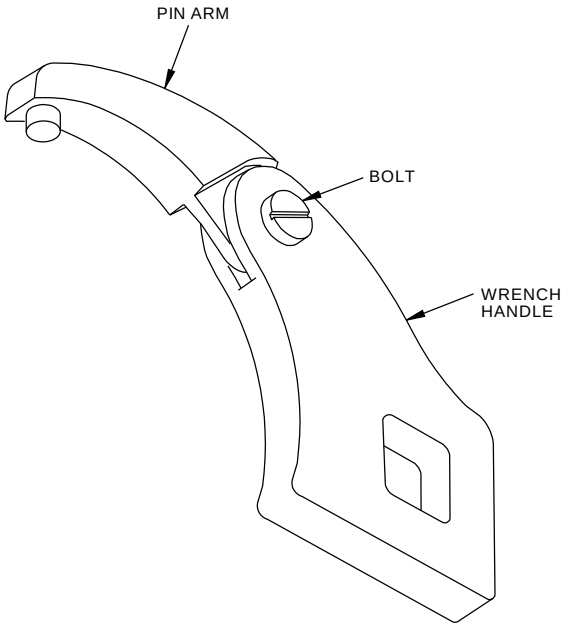

G46078 S0006831840_V2

AN Standard Type Spanner Wrench
Figure 1

BOEING PROPRIETARY - Copyright © Unpublished Work - See title page for details

PART NUMBER: C32044-1

NAME: FREEPLAY CHECK EQUIPMENT - NOSE LANDING GEAR

AIRPLANE MAINTENANCE: YES

AMM 32-21-00

COMPONENT MAINTENANCE: NO

USAGE & DESCRIPTION: The C32044-1 freeplay check equipment is used on all 737 airplanes except 737-100 thru -500 airplanes.

C32044 is used to secure nose landing gear steering actuator rods to prevent movement during the nose gear torsional freeplay check.

Refer to AMM 32-21-00 and the current C32044 drawing for complete usage instructions.

C32044-1 consists of:

C32044-1		
QUANTITY	**NOMENCLATURE**	**PART NUMBER**
1	LEVER ARM ASSEMBLY	C32044-2
2	COLLAR ASSEMBLY	C32044-4
2	COLLAR ASSEMBLY	C32044-5
1	STORAGE BOX	

WEIGHT: 11 lbs (5 kg)

DIMENSIONS: 60 x 5 x 5 inches (1524 x 127 x 127 mm)

BOEING PROPRIETARY - Copyright © Unpublished Work - See title page for details

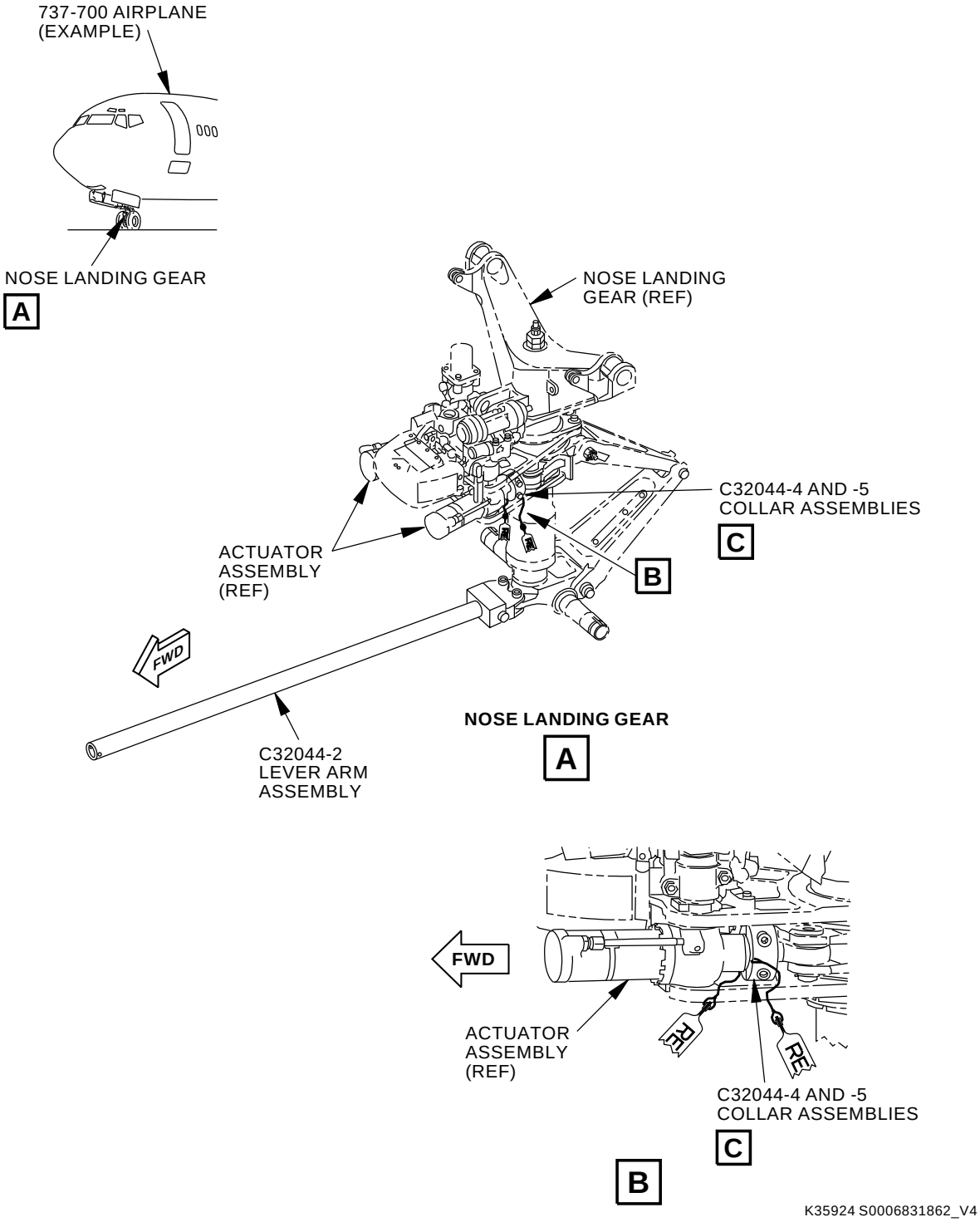

Nose Landing Gear Freeplay Check Equipment
Figure 1 (Sheet 1 of 2)

BOEING PROPRIETARY - Copyright © Unpublished Work - See title page for details

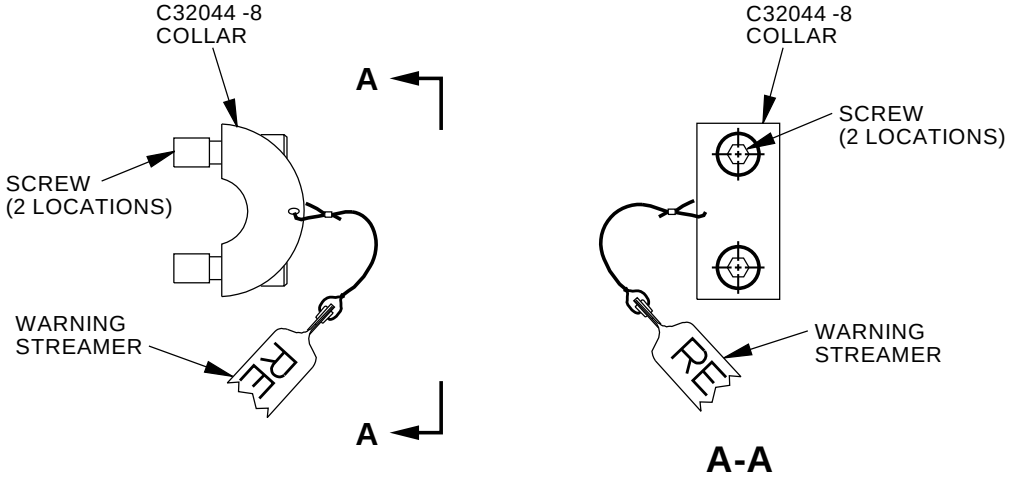

C32044-4
COLLAR ASSEMBLY

C

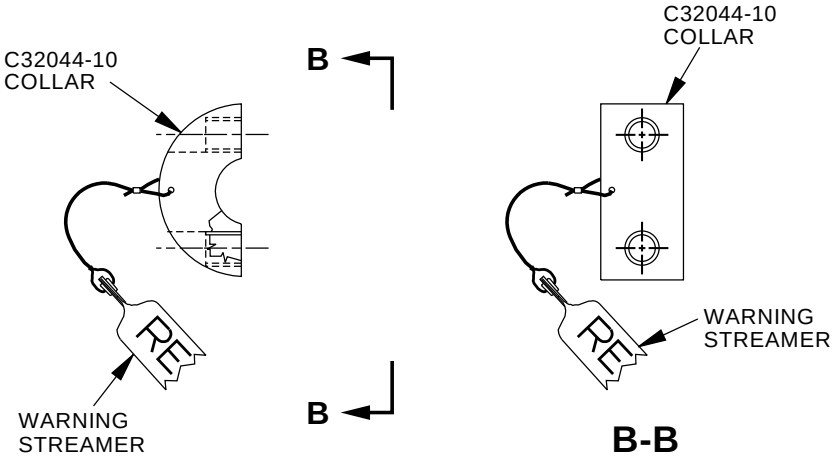

C32044-5
COLLAR ASSEMBLY

C

K36366 S0006831863_V4

Nose Landing Gear Freeplay Check Equipment
Figure 1 (Sheet 2 of 2)

BOEING PROPRIETARY - Copyright © Unpublished Work - See title page for details

PART NUMBER: C32035-1

NAME: METERING PIN AND RETAINER RING REMOVAL/INSTALLATION EQUIPMENT - NOSE LANDING GEAR

AIRPLANE MAINTENANCE: YES

AMM 32-21-24

COMPONENT MAINTENANCE: YES

CMM 32-21-12

USAGE & DESCRIPTION: The C32035-1 metering pin and retainer ring removal and installation equipment is used on all 737 airplanes, except 737-100 thru -500 airplanes..

C32035 is used for removal or installation of the nose landing gear metering pin and the lower bearing carrier from the nose landing gear inner cylinder.

Refer to AMM 32-21-24, CMM 32-21-12 and the current C32035 drawing for complete usage instructions.

C32035-1 consists of:

C32035-1		
QUANTITY	**NOMENCLATURE**	**PART NUMBER**
1	SOCKET ASSEMBLY	C32035-3
1	RING GUIDE ASSEMBLY	C32035-4
1	KNOCKOUT ROD ASSEMBLY	C32035-5
1	WRENCH ASSEMBLY	C32035-6
1	STORAGE BOX	

WEIGHT: 10 lbs (4.5 kg)

DIMENSIONS: 4 x 10 x 25 inches (102 x 254 x 635 mm)

BOEING PROPRIETARY - Copyright © Unpublished Work - See title page for details

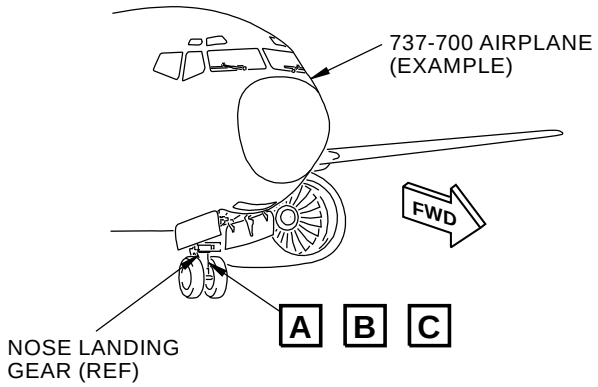

NOSE LANDING GEAR STRUT

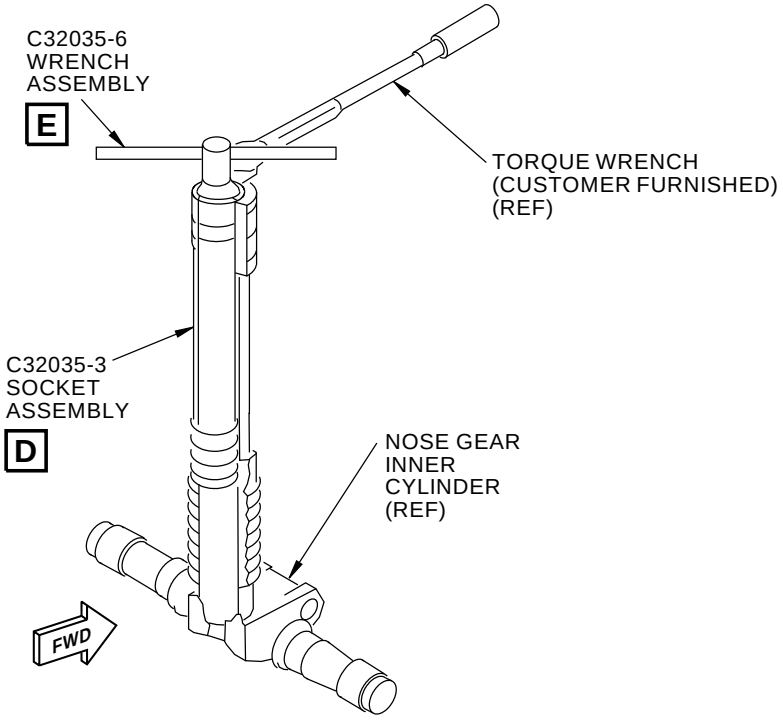

REMOVAL OR INSTALLATION OF RETAINING PIN

A

M27027 S0006831865_V3

Nose Landing Gear Metering Pin and Retainer Ring Location/Equipment
Figure 1 (Sheet 1 of 3)

BOEING PROPRIETARY - Copyright © Unpublished Work - See title page for details

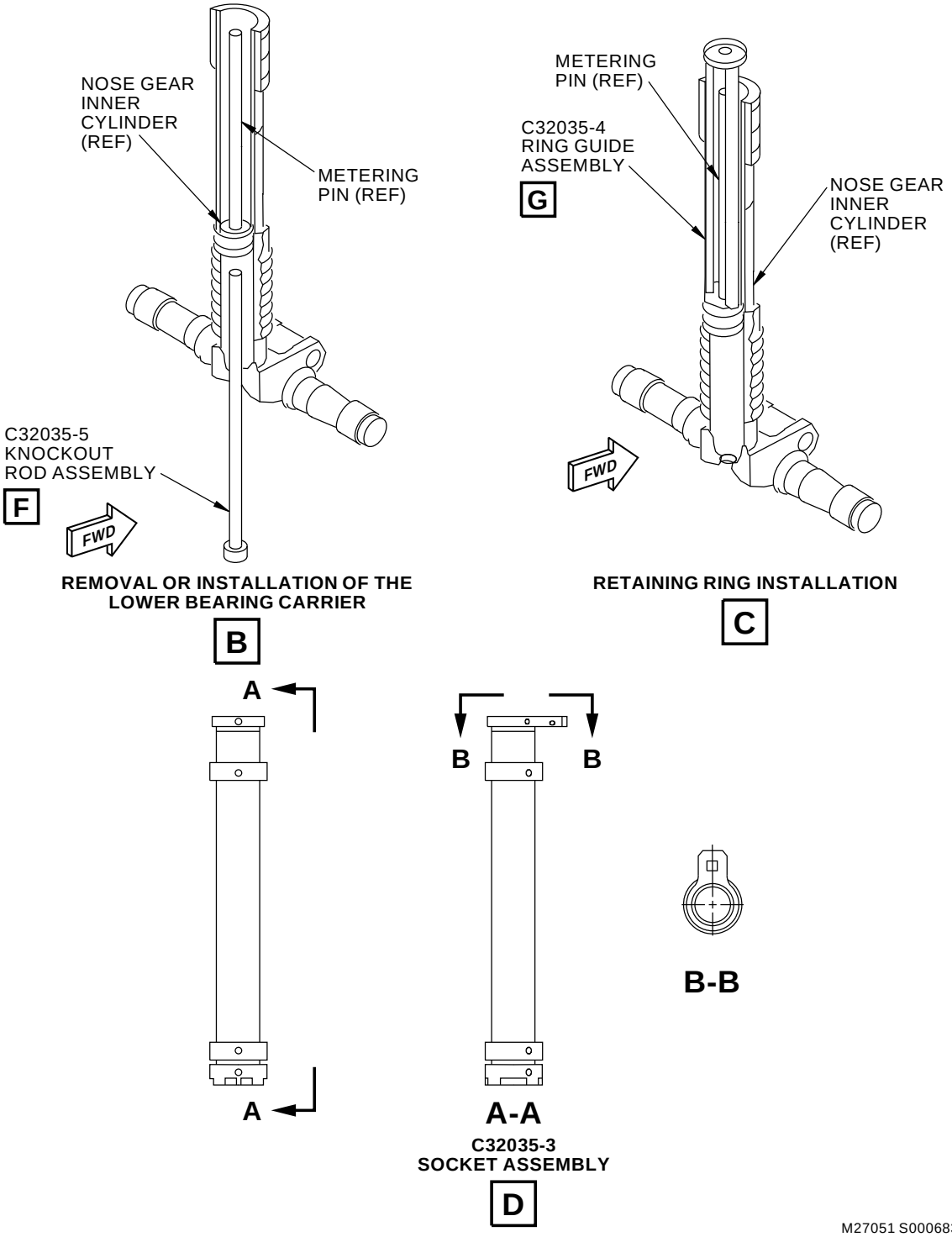

M27051 S0006831866_V3

Nose Landing Gear Metering Pin and Retainer Ring Location/Equipment
Figure 1 (Sheet 2 of 3)

BOEING PROPRIETARY - Copyright © Unpublished Work - See title page for details

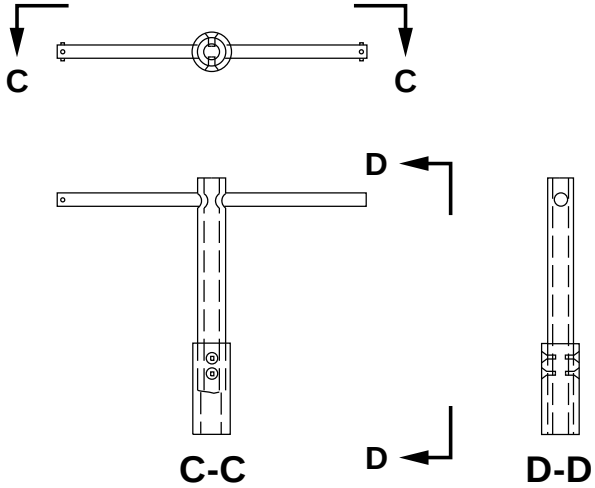

C32035-6
WRENCH ASSEMBLY

E

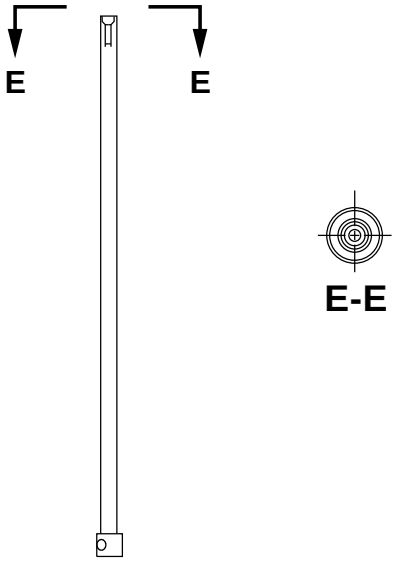

C32035-5
KNOCKOUT ROD ASSEMBLY

F

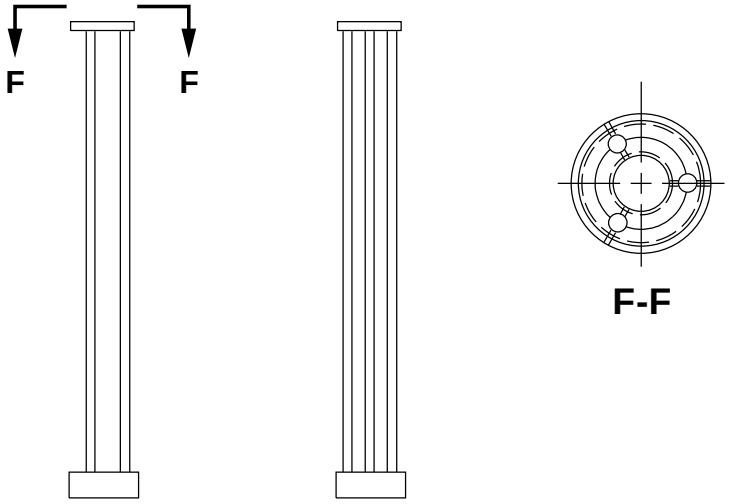

C32035-4
RING GUIDE ASSEMBLY

G

M27067 S0006831867_V3

Nose Landing Gear Metering Pin and Retainer Ring Location/Equipment
Figure 1 (Sheet 3 of 3)

BOEING PROPRIETARY - Copyright © Unpublished Work - See title page for details

PART NUMBER: C32041-57, -67

NAME: BUILDUP EQUIPMENT - NOSE LANDING GEAR (CE)

AIRPLANE MAINTENANCE: NO

COMPONENT MAINTENANCE: YES

CMM 32-21-12, CMM 32-21-6, CMM 32-21-7, CMM 32-21-38, CMM 32-21-48, CMM 32-26-01, CMM 32-26-11

USAGE & DESCRIPTION: The C32041-57 buildup equipment is used during component maintenance on all 737 airplanes.

The C32041-67 buildup equipment is used together with the C32041-57 buildup equipment during component maintenance on 737-7, -8, -8200 and -9 airplanes.

C32041 is used in conjunction with a customer-furnished overhead lift and J71046 specification load cell equipment. C32041 is used in component overhaul to facilitate assembly or disassembly of the nose landing gear, including wheels and tires.

C32041-67 and C32041-57 must be ordered together to make a complete tool for the 737-7, -8, -8200 and -9 airplanes.

Refer to CMM 32-21-12, CMM 32-21-6, CMM 32-21-7, CMM 32-21-38, CMM 32-21-48, CMM 32-26-01, CMM 32-26-11 and the current C32041 drawing for complete usage instructions.

C32041-57 and -67 consist of:

C32041-57		
QUANTITY	**NOMENCLATURE**	**PART NUMBER**
1	BASE ASSEMBLY	C32041-2
1	HANDLE ASSEMBLY	C32041-16
1	SLING ASSEMBLY	C32041-58
2	CLAMP ASSEMBLY	C32041-62
1	JACKING TUBE	C32041-25
8	BOLT	C32041-34
1	JIG PIN	C32041-44
8	PLAIN WASHER	C32041-64
1	MASTER LINK	C32041-65

C32041-67		
QUANTITY	**NOMENCLATURE**	**PART NUMBER**
8	BOLT	C32041-34
8	PLAIN WASHER	C32041-64
2	EXTENSION TUBE ASSEMBLY	C32041-68
1	STORAGE BOX	

BOEING PROPRIETARY - Copyright © Unpublished Work - See title page for details

WEIGHT: C32041-57 - 300 lbs (136 kg)
C32041-67 - 2 lbs (0.9 kg)

DIMENSIONS: C32041-57 - 49 x 54 x 57 inches (1245 x 1372 x 1448 mm)
C32041-67 - 7 x 8 x 10 inches (178 x 203 x 254 mm)

NOTE: C32041-57 supersedes C32041-40.

DECLARATION OF CONFORMITY: C32041 requires a written Declaration of Conformity from the C32041 fabricator if it is to be used in the European Union. The design of C32041 meets the European requirements of Machinery Directive 2006/42/EC including its amendments. When used within the European Union, the fabricator of C32041 must also meet the requirements of that directive. At a minimum for the tool fabricator, this requires the retention of a technical file, a labeling of the equipment with the CE mark, and the completion of an EC Declaration of Conformity. If C32041 is to be used within the European Union and the Declaration of Conformity is missing, contact the fabricator of C32041 for a replacement Declaration of Conformity.

OPERATING INSTRUCTIONS: Refer to the current C32041 drawing and CMM 32-21-12, CMM 32-21-6, CMM 32-21-7, CMM 32-21-38, CMM 32-21-48, CMM 32-26-01, CMM 32-26-11 maintenance procedures for detailed instructions on the use of this equipment. This equipment shall only be used in conjunction with Boeing maintenance procedures to maintain Boeing airplanes.

MAINTENANCE: General Cleaning: Basic care of the equipment includes cleaning the equipment of dirt, corrosives, or contaminants. Wipe off all surface dirt with a sponge dampened in plain water. Squeeze the sponge dry. Dip the sponge in a mild solution of water and commercial soap or detergent, clean the components and wipe dry with a clean cloth. Hang the components freely to dry, but away from excessive heat or steam.

Slings, Wire Rope: Maintenance and inspection of wire rope shall be performed in accordance with EN 1492-1, Section 6, Section Annex B and ASME B-30.9, Chapter 9-2.

Structural and Mechanical Lifting Devices, (supporting lifters):

1. Maintenance shall be done based on the recommendations made by the lifter manufacturer or qualified person.
2. Before adjustments and repairs are started on a lifter, the following precautions shall be taken:
   - All courses of power shall be disconnected, locked out, and tagged "Out of Service".
   - A lifter removed from service for repair shall be tagged "Out of Service".
3. Only a qualified person shall perform adjustments and tests when required.
4. Replacement parts shall be at least equal to the original manufacturer’s specifications.

BOEING PROPRIETARY - Copyright © Unpublished Work - See title page for details

5. After adjustments and repairs have been made, the lifter shall not be returned to service until it has been inspected according to ASME B-30.20, para. 20-1.3.4.
6. Dated records of repairs and replacements shall be made.
7. Adjustments and repairs. Any hazardous conditions disclosed by the inspection requirements of ASME B-30.20, para. 20-1.3.1 shall be corrected before normal operations of the lifter is resumed. Adjustments and repairs shall be done under the direction of , or by, a qualified person.

PROOF LOAD: Proof load testing for the C32041-57 and -67 buildup equipment shall be performed per the current C32041 drawing proof load diagrams (example Figure 2) and:

- In conjunction with initial fabrication
- Subsequent to modification of this equipment (equipment shall only be modified in accordance with the C32041 drawing).
- After repair of load carrying components.
- After replacement of load carrying components (except for load carrying components such as shackles and hoist rings that carry their own certification).
- Continuing integrity/safety of the device to be assured by inspection.

INSPECTION: FREQUENT

General Inspection (before use):

1. Missing fasteners
2. Notes, Cautions and Warnings are legible
3. Usage placards are legible

Slings, General: Prior to use, all new, altered, modified or repaired slings shall be inspected by a designated person to verify compliance with the applicable provisions of EN 1492-1, Section 6, Section Annex B and ASME B-30.9

Slings, Wire Ropes:

1. Visual inspection for damage shall be performed by the user or other designated person each day or shift the sling is used.
2. Condition such as those listed in EN 1492-1, Section 6, Section Annex B and ASME B-30.9, paragraph 9.2.9.4 or any other condition that may result in hazard shall cause the sling to be removed from service.
3. Slings shall not be returned to service until approved by a qualified person.

Structural and Mechanical Lifting Devices (supporting lifters):

1. Visual Inspection by the operator before and during each lift of the device. Records are not required. Inspect for:

BOEING PROPRIETARY - Copyright © Unpublished Work - See title page for details

- Structural deformation, cracks or excessive wear of any parts of the lifting device.
- Loose or missing guards, fasteners, covers, stops or nameplates.
- All functional operational mechanisms and automatic hold and release mechanisms for misadjustments interfering with operation.

PERIODIC

Welding Inspection:

1. Magnetic particle or dye penetrant inspection for all welds, after all proof load tests.
2. Inspect and evaluate per GSE Welding Document A00001 Inspection Requirements Tables 1 & 2, and Acceptance Criteria Table 3.
3. Reject cracked or deformed parts.

Slings, General:

1. A complete inspection for damage to the sling shall be periodically performed by a designated person.
2. Each sling and component shall be examined individually, taking care to expose and examine all surfaces.
3. The sling shall be examined for the conditions noted in the frequent inspection and in ASME B-30.9 or any other conditions that may result in a hazard shall cause the sling to be removed from service.
4. Slings shall not be returned to service until approved by a qualified person.
5. A written record of the most recent periodic inspection shall be maintained and shall include the condition of the sling.

Slings, Wire Ropes:

1. Wire rope inspection shall be conducted on the entire length, including splices, end attachments and fittings.
2. Wire rope inspection shall be examined for conditions listed in EN 1492-1, Section 6, Section Annex B and ASME B-30.9, paragraph 9.2.9.4.
3. Deficiencies found during the inspection are analyzed and the wire rope shall not be used, if deficiencies are determined to be hazardous.

Structural and Mechanical Lifting Devices (supporting lifters):

1. A written record of a visual inspection, by a qualified person is required.
2. Inspection is made of external conditions for a continuing evaluation of the following factors:
   - Loose bolts or fasteners.

BOEING PROPRIETARY - Copyright © Unpublished Work - See title page for details

- Excessive wear of linkages and other mechanical parts.
- Excessive wear at hoist hooking points and load support clevises or pins.
- Deficiencies found during the inspection are analyzed and the lifting device shall not be used, if deficiencies are determined to be hazardous.
- The lifting device shall not be used until the hazardous deficiencies are corrected.

STORAGE: C32041 shall be stored clean, dry, free of exposure to fumes or corrosive elements, indoors and in the furnished storage box.

DECOMMISSIONING: Part and assemblies of this equipment, including wire rope components, shall be permanently altered to prevent their unauthorized reuse. Recycling is the preferred manner of disposal for those materials where that option is available.

BOEING PROPRIETARY - Copyright © Unpublished Work - See title page for details

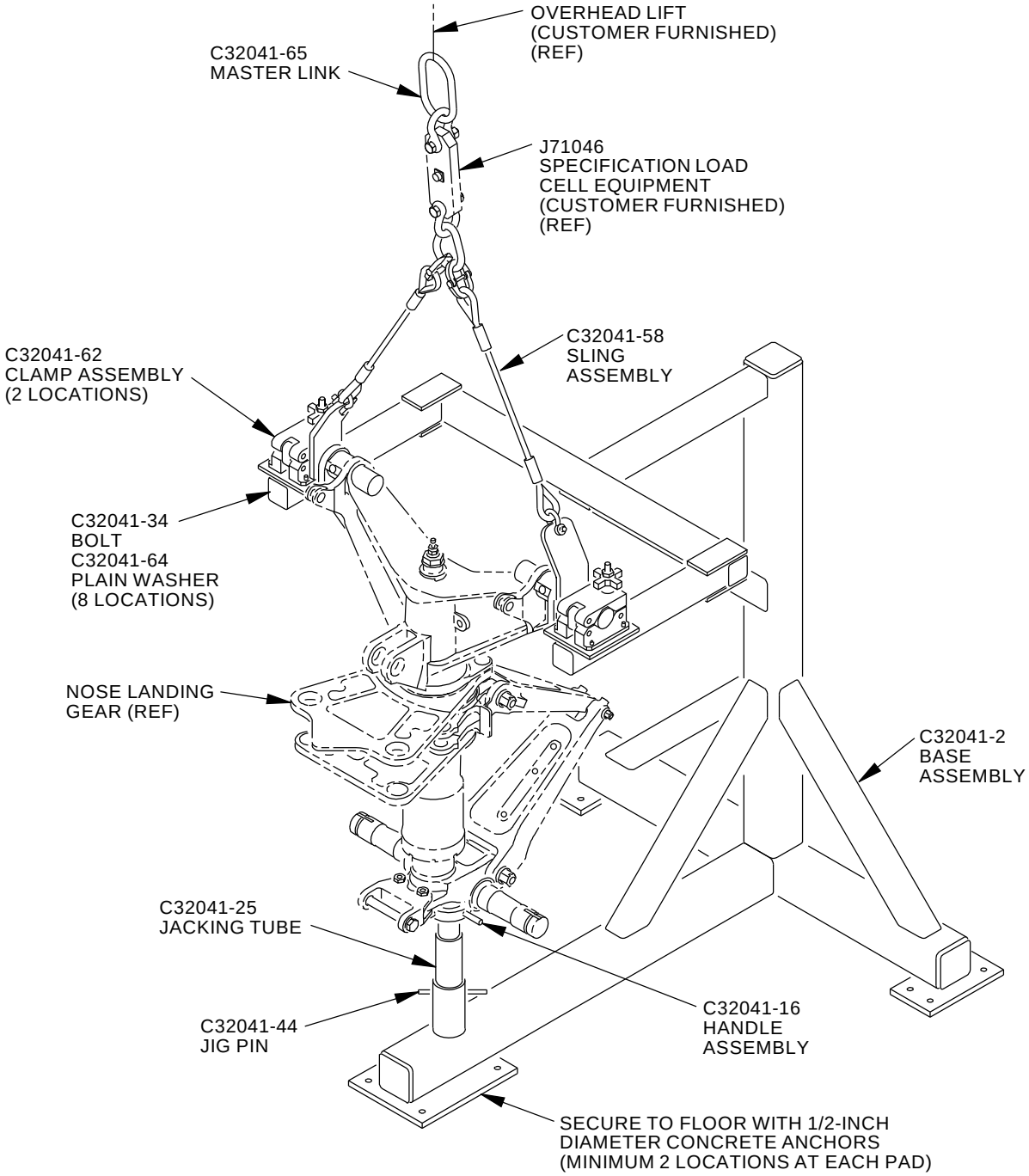

C32041-57
BUILDUP EQUIPMENT

M62817 S0006831869_V6

Nose Landing Gear Buildup Equipment
Figure 1 (Sheet 1 of 2)

BOEING PROPRIETARY - Copyright © Unpublished Work - See title page for details

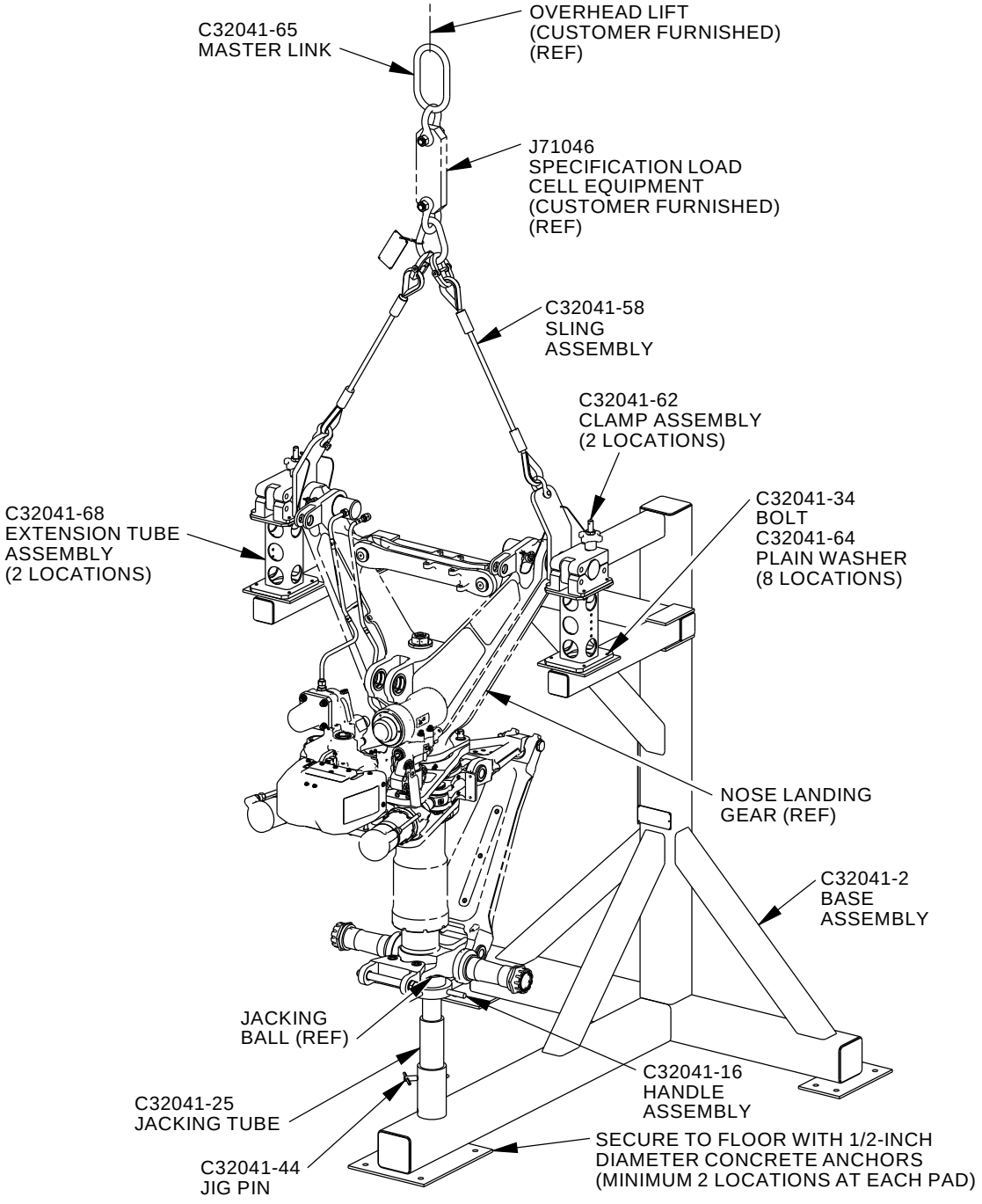

C32041-57
BUILDUP EQUIPMENT AND
C32041-67
EXTENSION EQUIPMENT

2436320 S0000564722_V1

Nose Landing Gear Buildup Equipment
Figure 1 (Sheet 2 of 2)

BOEING PROPRIETARY - Copyright © Unpublished Work - See title page for details

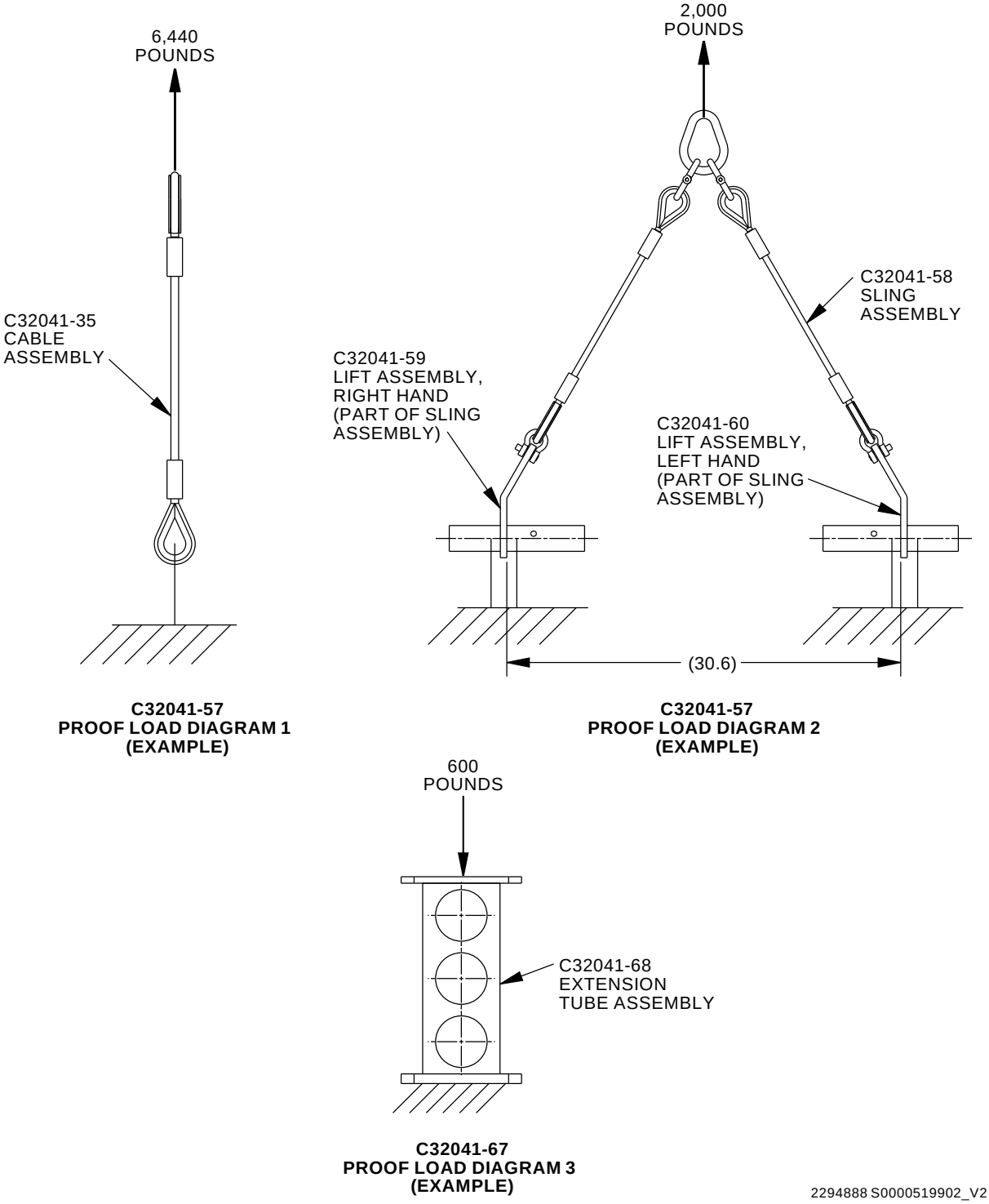

C32041-57
PROOF LOAD DIAGRAM 1
(EXAMPLE)

C32041-57
PROOF LOAD DIAGRAM 2
(EXAMPLE)

C32041-67
PROOF LOAD DIAGRAM 3
(EXAMPLE)

2294888 S0000519902_V2

C32041 Proof Load Diagram (Examples)
Figure 2

BOEING PROPRIETARY - Copyright © Unpublished Work - See title page for details

PART NUMBER: C32019-1

NAME: EXTENSION - ORIFICE TUBE, NOSE GEAR SHOCK STRUT

AIRPLANE MAINTENANCE: NO

COMPONENT MAINTENANCE: YES

CMM 32-21-12

USAGE & DESCRIPTION: The C32019-1 extension is used during component maintenance on all 737 airplanes.

C32019 is used during component overhaul as an aid to removing or installing the nose landing gear orifice tube.

Refer to CMM 32-21-12 and the current C32019 drawing for complete usage instructions.

C32019-1 consists of:

C32019-1		
QUANTITY	**NOMENCLATURE**	**PART NUMBER**
1	EXTENSION	C32019-2
1	STORAGE BOX	

WEIGHT: 1.5 lbs (0.68 kg)

DIMENSIONS: 1.5 x 1.5 x 10 inches (38 x 38 x 254 mm)

NOTE: C32019 replaces F80160 and the cancelled SE32-1102 for future procurement.

BOEING PROPRIETARY - Copyright © Unpublished Work - See title page for details

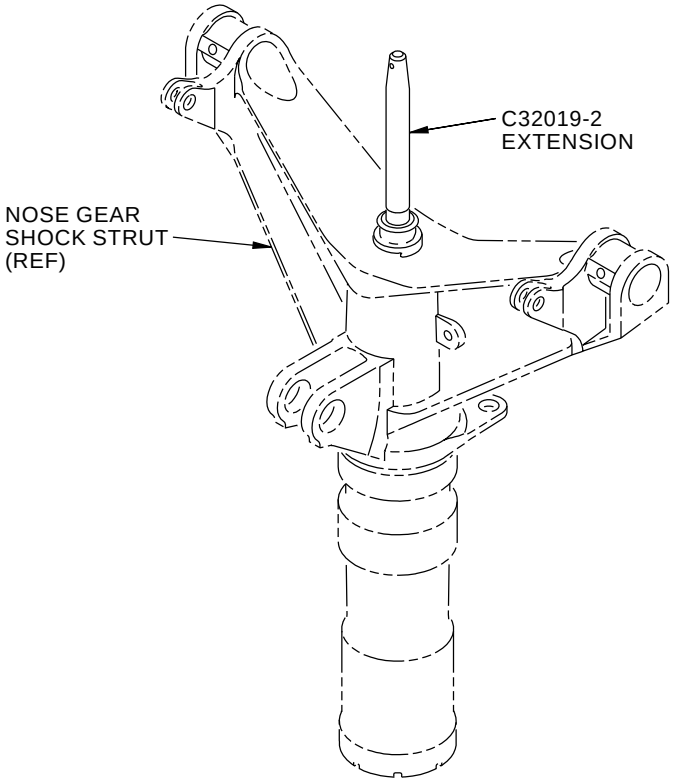

M62535 S0006831871_V3

Nose Landing Gear Extension Tube Usage
Figure 1

BOEING PROPRIETARY - Copyright © Unpublished Work - See title page for details

PART NUMBER: C32049-1

NAME: OUTRIGGER ASSEMBLY - REMOVAL AND INSTALLATION/GROUND HANDLING, NOSE LANDING GEAR

AIRPLANE MAINTENANCE: YES

AMM 32-21-00

COMPONENT MAINTENANCE: NO

USAGE & DESCRIPTION: The C32049-1 outrigger assembly is used on all 737 airplanes, except 737-100 thru -500 airplanes.

C32049 is used to aid in the installation or removal of the nose landing gear. C32049 attaches to the nose landing gear, allowing rolling movement. C32049 may also be used to allow temporary storage of the nose gear assembly.

Refer to AMM 32-21-00 and the current C32049 drawing for complete usage instructions.

C32049-1 consists of:

C32049-1		
QUANTITY	**NOMENCLATURE**	**PART NUMBER**
1	OUTRIGGER ASSEMBLY	C32049-2
1	STORAGE BOX	

WEIGHT: 17 lbs (8 kg)

DIMENSIONS: 7 x 11 x 19 inches (178 x 279 x 483 mm)

BOEING PROPRIETARY - Copyright © Unpublished Work - See title page for details

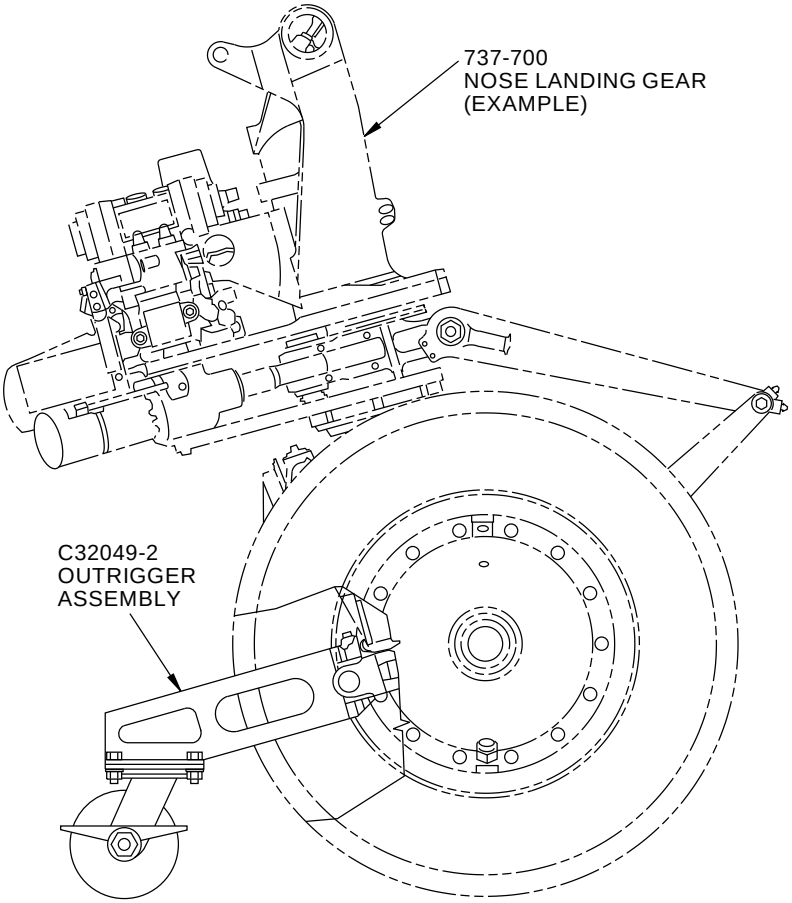

U41332 S0000194983_V3

Nose Landing Gear Removal and Installation/Ground Handling Outrigger Assembly
Figure 1

BOEING PROPRIETARY - Copyright © Unpublished Work - See title page for details

PART NUMBER: C32055-1

NAME: CLAMP ASSEMBLY - STEERING CABLES, NOSE LANDING GEAR

AIRPLANE MAINTENANCE: YES

AMM 32

COMPONENT MAINTENANCE: NO

USAGE & DESCRIPTION: The C32055-1 clamp assembly is used on all 737-100 thru -900 airplanes.

The C32055 is is used to remove the tension from the lower portion of the 737 steering cables for removal and inspection of components obstructed by the steering control cables.

Refer to AMM 32 and the current C32055 tool drawing for complete usage instructions.

C32055-1 consists of:

C32055-1		
QUANTITY	**NOMEMCLATURE**	**PART NUMBER**
1	CLAMP CARRIER ASSEMBLY	C32055-2
1	STORAGE BOX	

WEIGHT: 2 lbs (1 kg)

DIMENSIONS: 4 x 4 x 4 inches (102 x 102 x 102 mm)

BOEING PROPRIETARY - Copyright © Unpublished Work - See title page for details

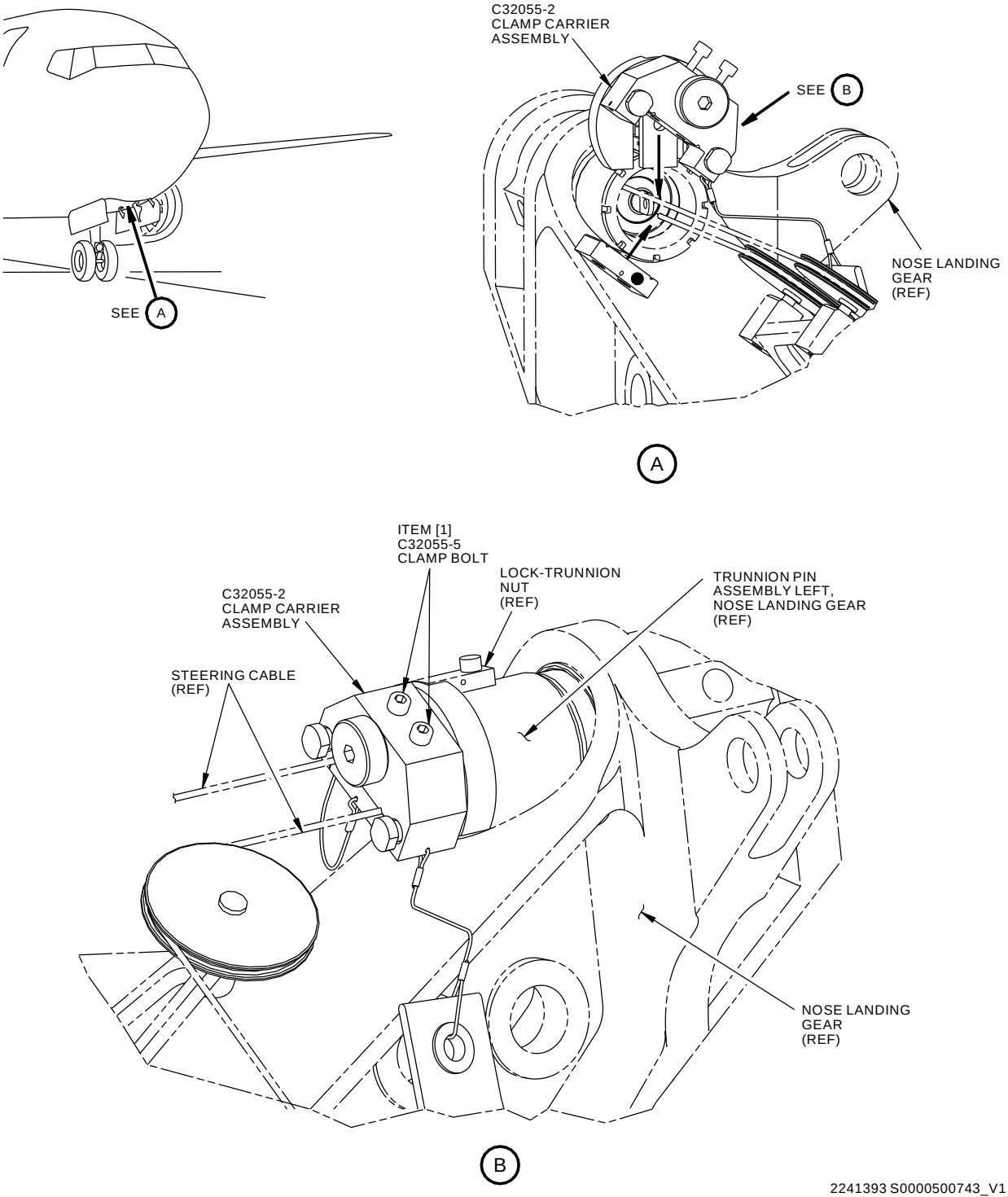

Nose Landing Gear Steering Cables Clamp Assembly
Figure 1

BOEING PROPRIETARY - Copyright © Unpublished Work - See title page for details

REPAIRABLE/REPLACEABLE PARTS			
ITEM NO.	PART NO.	NOMENCLATURE	VENDOR CODE
[1]	C32055-5	CLAMP BOLT	- - -

BOEING PROPRIETARY - Copyright © Unpublished Work - See title page for details

PART NUMBER: C32014-1

NAME: SPRING EXTENDER - DOWNLOCK, NOSE AND MAIN LANDING GEAR (CE)

AIRPLANE MAINTENANCE: YES

AMM 32-32-91, AMM 32-33-51, AMM 32-33-52

COMPONENT MAINTENANCE: YES

CMM 32-11-13

USAGE & DESCRIPTION: The C32014-1 (CE qualified) spring extender is used on all 737 airplanes except 737-100 thru -500 airplanes..

C32014 is used to extend the downlock springs on the nose landing gear and main landing gear in order to relieve the load on the fasteners to facilitate removal or installation of the springs. C32014 extends the spring assembly by putting opposing forces on either end fitting of the assembly; the amount of extension is controlled by turning a lead screw with a customer-furnished 1/2-inch drive ratchet wrench.

Refer to AMM 32-32-91, AMM 32-33-51, AMM 32-33-52, CMM 32-11-13 and the current C32014 drawing for complete usage instructions.

C32014-1 consists of:

C32014-1		
QUANTITY	**NOMENCLATURE**	**PART NUMBER**
1	SPRING EXTENDER	C32014-2
1	STORAGE BOX	

WEIGHT: 3 lbs (1.5 kg)

DIMENSIONS: 6 x 6 x 16 inches (152 x 152 x 406 mm)

DECLARATION OF CONFORMITY: C32014 requires a written Declaration of Conformity from the C32014 fabricator if it is to be used in the European Union. The design of C32014 meets the European requirements of Machinery Directive 2006/42/EC including its amendments. When used within the European Union, the fabricator of C32014 must also meet the requirements of that directive. At a minimum for the tool fabricator, this requires the retention of a technical file, a labeling of the equipment with the CE mark, and the completion of an EC Declaration of Conformity. If C32014 is to be used within the European Union and the Declaration of Conformity is missing, contact the fabricator of C32014 for a replacement Declaration of Conformity.

OPERATING INSTRUCTIONS: Refer to the current C32014 drawing and AMM 32-32-91, AMM 32-33-51, AMM 32-33-52, CMM 32-11-13 maintenance procedures for detailed instructions on the use of this equipment. This equipment shall only be used in conjunction with Boeing maintenance procedures to maintain Boeing airplanes.

BOEING PROPRIETARY - Copyright © Unpublished Work - See title page for details

MAINTENANCE: General Cleaning: Basic care of the equipment includes cleaning the equipment of dirt, corrosives, or contaminants. Wipe off all surface dirt with a sponge dampened in plain water. Squeeze the sponge dry. Dip the sponge in a mild solution of water and commercial soap or detergent, clean the components and wipe dry with a clean cloth. Hang the components freely to dry, but away from excessive heat or steam.

INSPECTION: FREQUENT

General Inspection (before use):

1. Missing fasteners
2. Notes, Cautions and Warnings are legible
3. Usage placards are legible

STORAGE: C32014 shall be stored clean, dry, and free of exposure to fumes or corrosive elements, indoors and in the furnished storage box.

DECOMMISSIONING: Part and assemblies of this equipment shall be permanently altered to prevent their unauthorized reuse. Recycling is the preferred manner of disposal for those materials where that option is available.

BOEING PROPRIETARY - Copyright © Unpublished Work - See title page for details

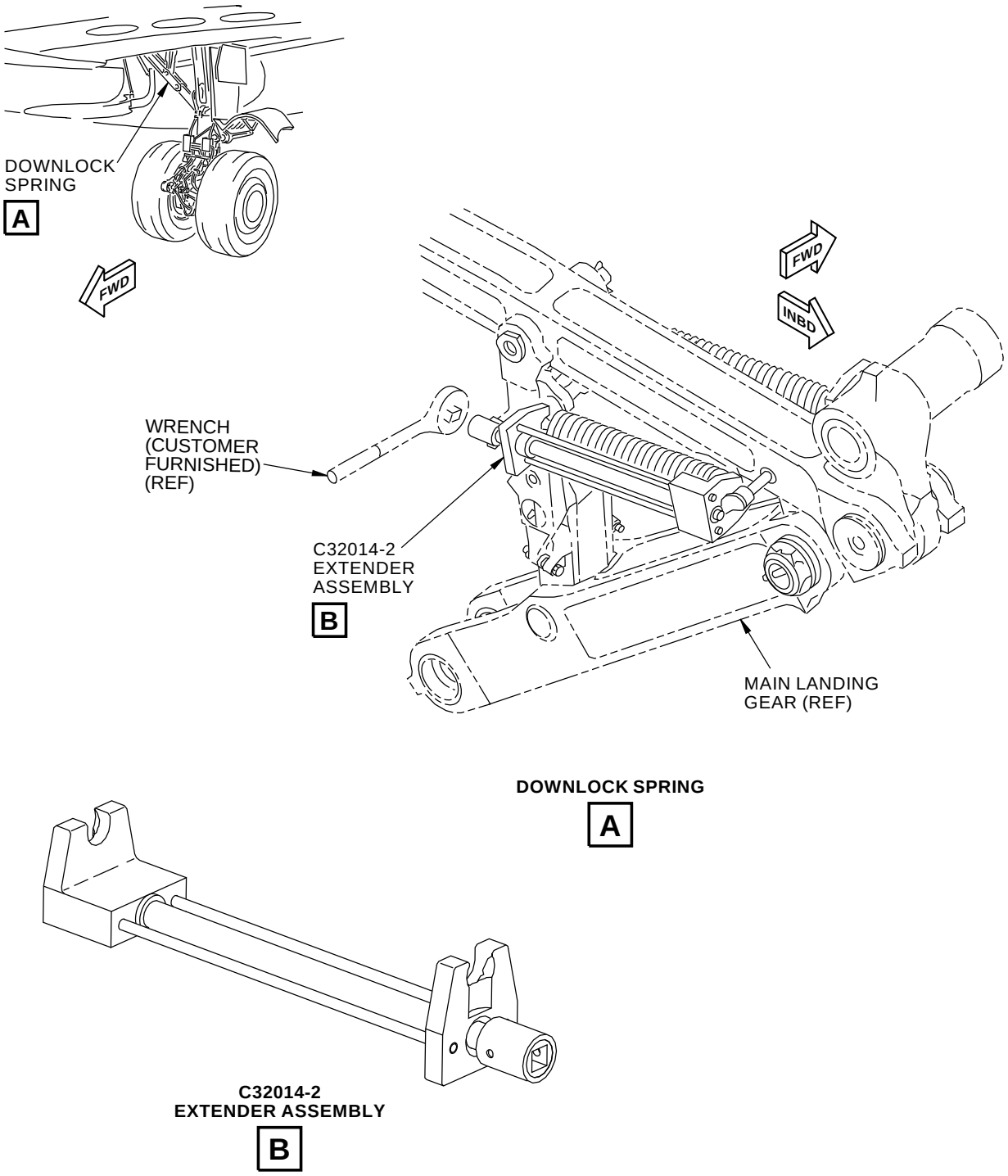

G46152 S0006831874_V3

Nose and Main Landing Gear Downlock Spring Extender
Figure 1

BOEING PROPRIETARY - Copyright © Unpublished Work - See title page for details

PART NUMBER: C32028-1, -3, -56, -58, -59, -109, -110, -111

NAME: REMOVAL/INSTALLATION EQUIPMENT - WALKING BEAM ASSEMBLY, MAIN LANDING GEAR (CE)

AIRPLANE MAINTENANCE: YES

AMM 32-32-11, AMM 32-32-93

COMPONENT MAINTENANCE: NO

USAGE & DESCRIPTION: Either C32028-1 (option, non-CE qualified), C32028-58 (option, non-CE qualified) or C32028-110 (preferred, CE qualified) removal/installation equipment is used on all 737 airplanes, except 737-100 thru -500 airplanes.

Either C32028-56 (option, non-CE qualified) or C32028-109 (preferred, CE qualified) removal/installation equipment is used on all 737 airplanes, except 737-100 thru -500 airplanes.

Either C32028-3 (option, non-CE qualified), C32028-59 (option, non-CE qualified) or C32028-111 (preferred, CE qualified) removal/installation equipment is used on all 737 airplanes, except 737-100 thru -500 airplanes.

C32028 is used for the removal or installation of the main landing gear walking beam assembly.

The C32028-1, C32028-58 or C32028-110 is used in conditions without an overhead lift capability. C32028-1, -58 or -110 is used in conjunction with a customer-furnished fishpole hoist. C32028-1, -58 or -110 include a tripod/beam assembly that mounts to the wing. A clamp assembly attaches to the airplane's walking beam assembly. The fishpole hoist is mounted on the tripod/beam assembly. The fishpole hoist attaches to the clamp assembly to lift or lower the walking beam assembly.

The C32028-56 or C32028-109 is used with a customer-furnished, overhead lift. A clamp assembly attaches to a sling adapter assembly and the customer-furnished overhead lift to remove or install the airplane's walking beam assembly.

The C32028-3, C32028-59 or C32028-111 include the components for both non-overhead (wing mounted tripod/beam assembly) and overhead lift capabilities.

Refer to AMM 32-32-11, AMM 32-32-93 and the current C32028 drawing for complete usage instructions.

The C32028-1, -3, -56, -58, -59, -109, -110 and -111 consist of:

C32028-1		
QUANTITY	**NOMENCLATURE**	**PART NUMBER**
1	FORWARD LEG ASSEMBLY	C32028-6
1	AFT LEG ASSEMBLY	C32028-7
1	CLAMP ASSEMBLY	C32028-4

BOEING PROPRIETARY - Copyright © Unpublished Work - See title page for details

(Continued)

C32028-1		
QUANTITY	NOMENCLATURE	PART NUMBER
4	BOLT	NAS6603-13
1	STORAGE BOX	

C32028-3		
QUANTITY	NOMENCLATURE	PART NUMBER
1	CLAMP ASSEMBLY	C32028-4
1	SLING ADAPTER ASSEMBLY	C32028-5
1	FORWARD LEG ASSEMBLY	C32028-6
1	AFT LEG ASSEMBLY	C32028-7
4	BOLT (NAS6603-13)	C32028-88
1	STORAGE BOX	

C32028-56		
QUANTITY	NOMENCLATURE	PART NUMBER
1	CLAMP ASSEMBLY	C32028-4
1	SLING ADAPTER ASSEMBLY	C32028-5
1	STORAGE BOX	

C32028-58		
QUANTITY	NOMENCLATURE	PART NUMBER
1	CLAMP ASSEMBLY	C32028-4
1	FORWARD LEG ASSEMBLY	C32028-60
1	AFT LEG ASSEMBLY	C32028-61
4	WASHER	C32028-72
4	BOLT (NAS6603-13)	C32028-88
1	STORAGE BOX	

C32028-59		
QUANTITY	NOMENCLATURE	PART NUMBER
1	CLAMP ASSEMBLY	C32028-4
1	SLING ADAPTER ASSEMBLY	C32028-5
1	FORWARD LEG ASSEMBLY	C32028-60
1	AFT LEG ASSEMBLY	C32028-61
4	WASHER	C32028-72
4	BOLT (NAS6603-13)	C32028-88
1	STORAGE BOX	

BOEING PROPRIETARY - Copyright © Unpublished Work - See title page for details

C32028-109		
QUANTITY	NOMENCLATURE	PART NUMBER
1	CLAMP ASSEMBLY	C32028-112
1	SLING ADAPTER ASSEMBLY	C32028-5
1	STORAGE BOX	

C32028-110		
QUANTITY	NOMENCLATURE	PART NUMBER
1	CLAMP ASSEMBLY	C32028-112
1	FORWARD LEG ASSEMBLY	C32028-113
1	AFT LEG ASSEMBLY	C32028-61
4	WASHER	C32028-72
4	BOLT (NAS6603-13)	C32028-88
1	STORAGE BOX	

C32028-111		
QUANTITY	NOMENCLATURE	PART NUMBER
1	CLAMP ASSEMBLY	C32028-112
1	SLING ADAPTER ASSEMBLY	C32028-5
1	FORWARD LEG ASSEMBLY	C32028-113
1	AFT LEG ASSEMBLY	C32028-61
2	WASHER	C32028-72
2	BOLT (NAS6603-13)	C32028-88
1	STORAGE BOX	

WEIGHT: C32028-1 - 16 lbs (7 kg)
C32028-3 - 20 lbs (9 kg)
C32028-56, -109 - 4 lbs (2 kg)
C32028-58, -110 - 19 lbs (9 kg)
C32028-59, -111 - 23 lbs (10 kg)

DIMENSIONS: C32028-1 - 30 x 32 x 6 inches (762 x 813 x 152 mm)
C32028-3 - 30 x 32 x 6 inches (762 x 813 x 152 mm)
C32028-56, -109 - 12 x 12 x 6 inches (305 x 305 x 152 mm)
C32028-58, -110 - 28 x 38 x 6 inches (711 x 965 x 152 mm)
C32028-59, -111 - 31 x 38 x 6 inches (787 x 965 x 152 mm)

NOTE: C32028-56 supersedes C32028-2.
C32028-58 replaces C32028-1 for future procurement.
C32028-59 replaces C32028-3 for future procurement.
C32028-109, -110 and -111 replace C32028-56, -58 and -59, respectively, for future procurement.

BOEING PROPRIETARY - Copyright © Unpublished Work - See title page for details

DECLARATION OF CONFORMITY: C32028-109, -110 and -111 require a written Declaration of Conformity from the C32028-109, -110 or -111 fabricator if it is to be used in the European Union. The design of C32028-109, -110 and -111 meets the European requirements of Machinery Directive 2006/42/EC including its amendments. When used within the European Union, the fabricator of C32028-109, -110 and -111 must also meet the requirements of that directive. At a minimum for the tool fabricator, this requires the retention of a technical file, a labeling of the equipment with the CE mark, and the completion of an EC Declaration of Conformity. IfC32028-109, -110 or -111 is to be used within the European Union and the Declaration of Conformity is missing, contact the fabricator of C32028-109, -110 and -111 for a replacement Declaration of Conformity.

OPERATING INSTRUCTIONS: Refer to the current C32028 drawing and AMM 32-32-11 and AMM 32-32-93 maintenance procedures for detailed instructions on the use of this equipment. This equipment shall only be used in conjunction with Boeing maintenance procedures to maintain Boeing airplanes.

MAINTENANCE: General Cleaning: Basic care of the equipment includes cleaning the equipment of dirt, corrosives, or contaminants. Wipe off all surface dirt with a sponge dampened in plain water. Squeeze the sponge dry. Dip the sponge in a mild solution of water and commercial soap or detergent, clean the components and wipe dry with a clean cloth. Hang the components freely to dry, but away from excessive heat or steam.

Slings, Synthetic: Maintenance and inspection of synthetic shall be performed in accordance with ASME B-30.9, Chapter 9-5 and 9-6.

Structural and Mechanical Lifting Devices, (supporting lifter):

1. Maintenance shall be done based on the recommendations made by the lifter manufacturer or qualified person.
2. Before adjustments and repairs are started on a lifter, the following precautions shall be taken:
   - All courses of power shall be disconnected, locked out, and tagged "Out of Service".
   - A lifter removed from service for repair shall be tagged "Out of Service".
3. Only a qualified person shall perform adjustments and tests when required.
4. Replacement parts shall be at least equal to the original manufacturer’s specifications.
5. After adjustments and repairs have been made, the lifter shall not be returned to service until it has been inspected according to ASME B-30.2, para. 20-1.3.4.
6. Dated records of repairs and replacements shall be made.

BOEING PROPRIETARY - Copyright © Unpublished Work - See title page for details

7. Adjustments and repairs. Any hazardous conditions disclosed by the inspection requirements of ASME B-30.2, para. 21-1.3.1 shall be corrected before normal operations of the lifter is resumed. Adjustments and repairs shall be done under the direction of , or by, a qualified person.

PROOF LOAD: Proof load testing for C32028-109, -110 and -111 removal/installation equipment shall be performed per the current C32028 drawing proof load diagrams (example Figure 2) and:

- In conjunction with initial fabrication
- Subsequent to modification of this equipment (equipment shall only be modified in accordance with the C32028 drawing).
- After repair of load carrying components.
- After replacement of load carrying components (except for load carrying components such as shackles and hoist rings that carry their own certification).
- Continuing integrity/safety of the device to be assured by inspection.

INSPECTION: FREQUENT

General Inspection (before use):

1. Missing fasteners
2. Notes, Cautions and Warnings are legible
3. Usage placards are legible

Slings, General: Prior to use, all new, altered, modified or repaired slings shall be inspected by a designated person to verify compliance with the applicable provisions of EN 1492-1, Section 6, Section Annex B and ASME B-30.9

Slings, Webbing:

1. Visual inspection for damage shall be performed by the user or other designated person each day or shift the sling is used.
2. Slings shall not be returned to service until approved by a qualified person.
3. A written record of frequent inspections is not required.
4. Conditions detailed below and in EN 1492-1, Section 6, Section Annex B and ASME B-30.9, or conditions that may result in a hazard shall cause the sling to be removed from service.
   - Red warning yarns visible.
   - Acid or caustic burns.
   - Melting or charring of any part of the sling surface.
   - Snags, punctures, tears or cuts.
   - Broken or worn stitches in load bearing splices.
   - Excessive abrasive wear.

BOEING PROPRIETARY - Copyright © Unpublished Work - See title page for details

- Knots in any part of the sling.
- Discoloration and brittle or stiff areas on any part of the sling.
- Distortion of fittings.
- Missing or illegible sling tag.

Structural and Mechanical Lifting Devices (supporting lifters):

1. Visual Inspection by the operator before and during each lift of the device. Records are not required. Inspect for:
   - Structural deformation, cracks or excessive wear of any parts of the lifting device.
   - Loose or missing guards, fasteners, covers, stops or nameplates.
   - All functional operational mechanisms and automatic hold and release mechanisms for misadjustments interfering with operation.

PERIODIC

Welding Inspection:

1. Magnetic particle or dye penetrant inspection for all welds, after all proof load tests.
2. Inspect and evaluate per GSE Welding Document A00001 Inspection Requirements Tables 1 & 2, and Acceptance Criteria Table 3.
3. Reject cracked or deformed parts.

Slings, General:

1. A complete inspection for damage to the sling shall be periodically performed by a designated person.
2. Each sling and component shall be examined individually, taking care to expose and examine all surfaces.
3. The sling shall be examined for the conditions noted in the frequent inspection and in ASME B-30.9 or any other conditions that may result in a hazard shall cause the sling to be removed from service.
4. Slings shall not be returned to service until approved by a qualified person.
5. A written record of the most recent periodic inspection shall be maintained and shall include the condition of the sling.

Slings, Synthetic: The straps shall be examined for the conditions noted in the frequent inspection and in ASME B-30.9 or any other conditions that may result in a hazard shall cause the sling to be removed from service.

Structural and Mechanical Lifting Devices (supporting lifter):

1. A written record of a visual inspection, by a qualified person is required.
2. Inspection is made of external conditions for a continuing evaluation of the following factors:

BOEING PROPRIETARY - Copyright © Unpublished Work - See title page for details

- Loose bolts or fasteners.
- Excessive wear of linkages and other mechanical parts.
- Excessive wear at hoist hooking points and load support clevises or pins.
- Deficiencies found during the inspection are analyzed and the lifting device shall not be used, if deficiencies are determined to be hazardous.
- The lifting device shall not be used until the hazardous deficiencies are corrected.

STORAGE: C32028-109, -110 and -111 shall be stored clean, dry, and free of exposure to fumes or corrosive elements, indoors and in the furnished storage box.

DECOMMISSIONING: Part and assemblies of this equipment, including textile components, shall be permanently altered to prevent their unauthorized reuse. Recycling is the preferred manner of disposal for those materials where that option is available.

BOEING PROPRIETARY - Copyright © Unpublished Work - See title page for details

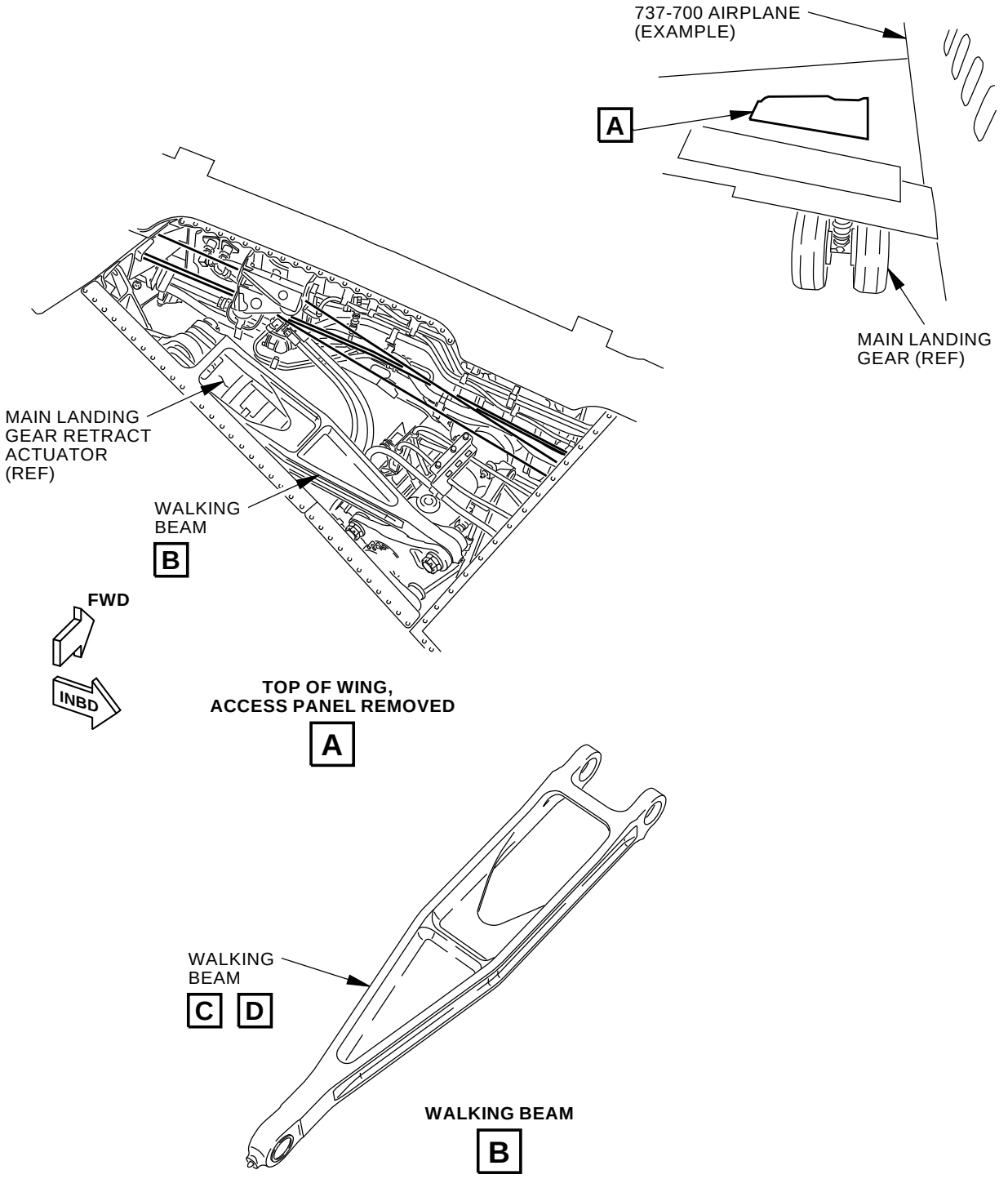

H85998 S0006831877_V3

Main Landing Gear Walking Beam Assembly Removal/Installation Equipment
Figure 1 (Sheet 1 of 4)

BOEING PROPRIETARY - Copyright © Unpublished Work - See title page for details

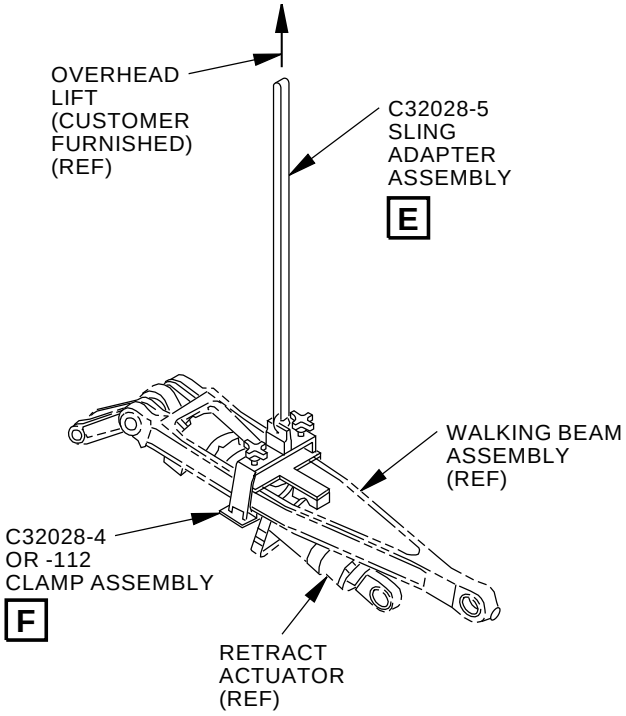

C32028-56 REMOVAL/INSTALLATION EQUIPMENT USAGE

C

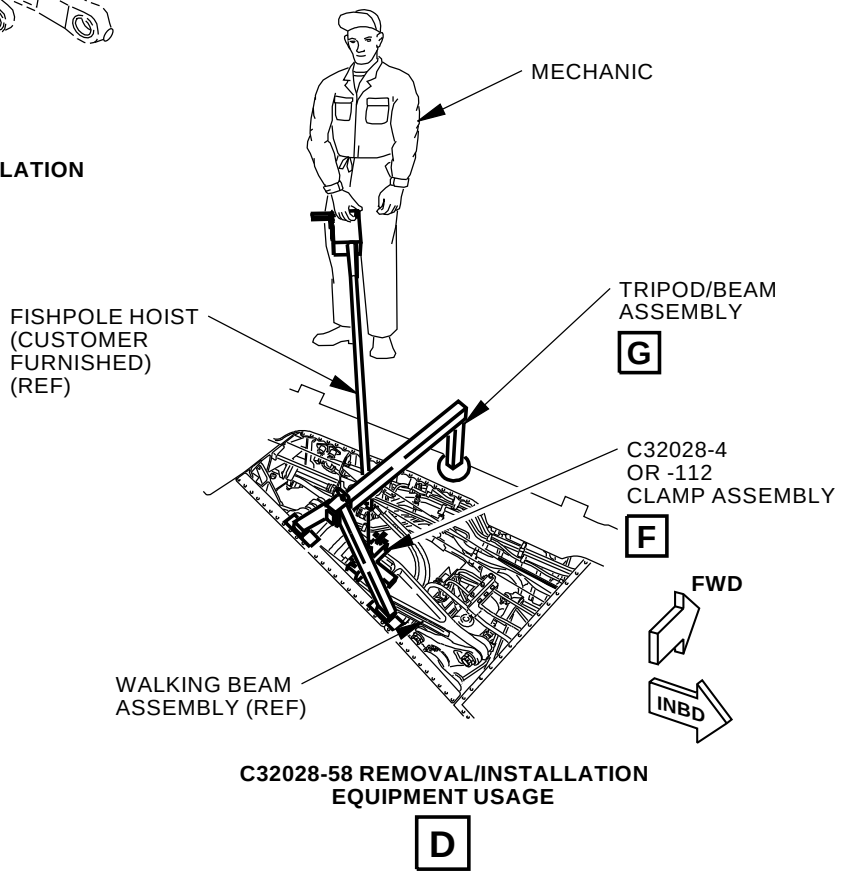

C32028-58 REMOVAL/INSTALLATION EQUIPMENT USAGE

D

H86005 S0006831878_V4

Main Landing Gear Walking Beam Assembly Removal/Installation Equipment
Figure 1 (Sheet 2 of 4)

BOEING PROPRIETARY - Copyright © Unpublished Work - See title page for details

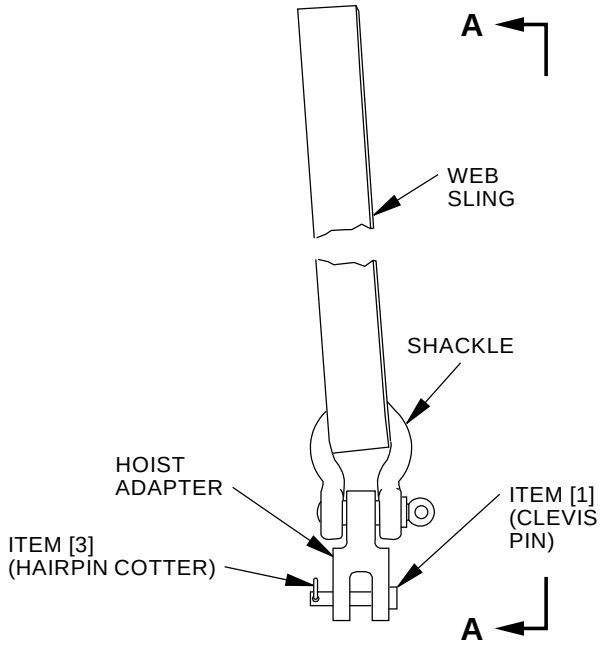

C32028-5 SLING ADAPTER ASSEMBLY
(COMMON TO C32028 -3,-56,-59,-109, AND -111)

E

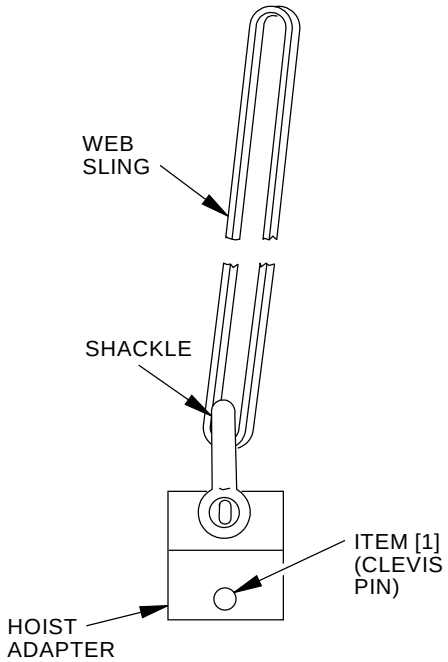

A-A

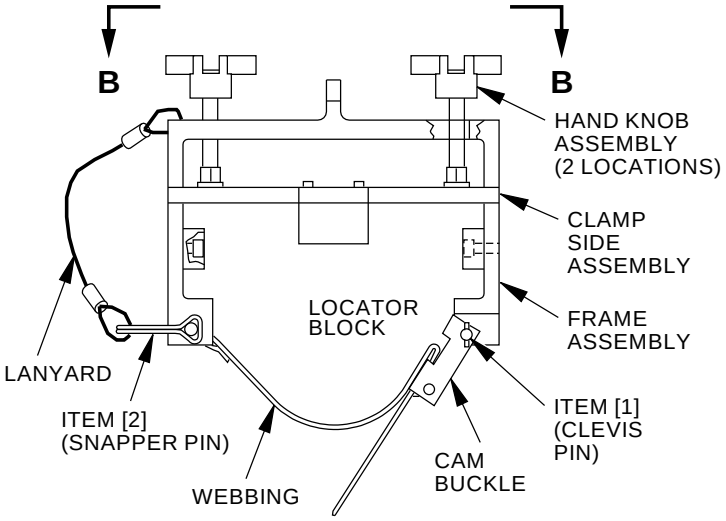

C32028-4 CLAMP ASSEMBLY SHOWN
C32028-112 SIMILAR
(COMMON TO ALL REMOVAL/INSTALLATION EQUIPMENT)

F

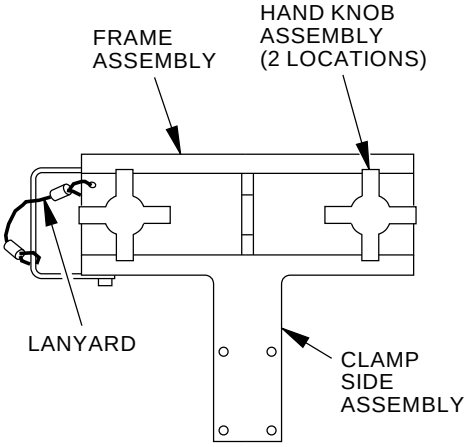

B-B

H86116 S0006831879_V4

Main Landing Gear Walking Beam Assembly Removal/Installation Equipment
Figure 1 (Sheet 3 of 4)

BOEING PROPRIETARY - Copyright © Unpublished Work - See title page for details

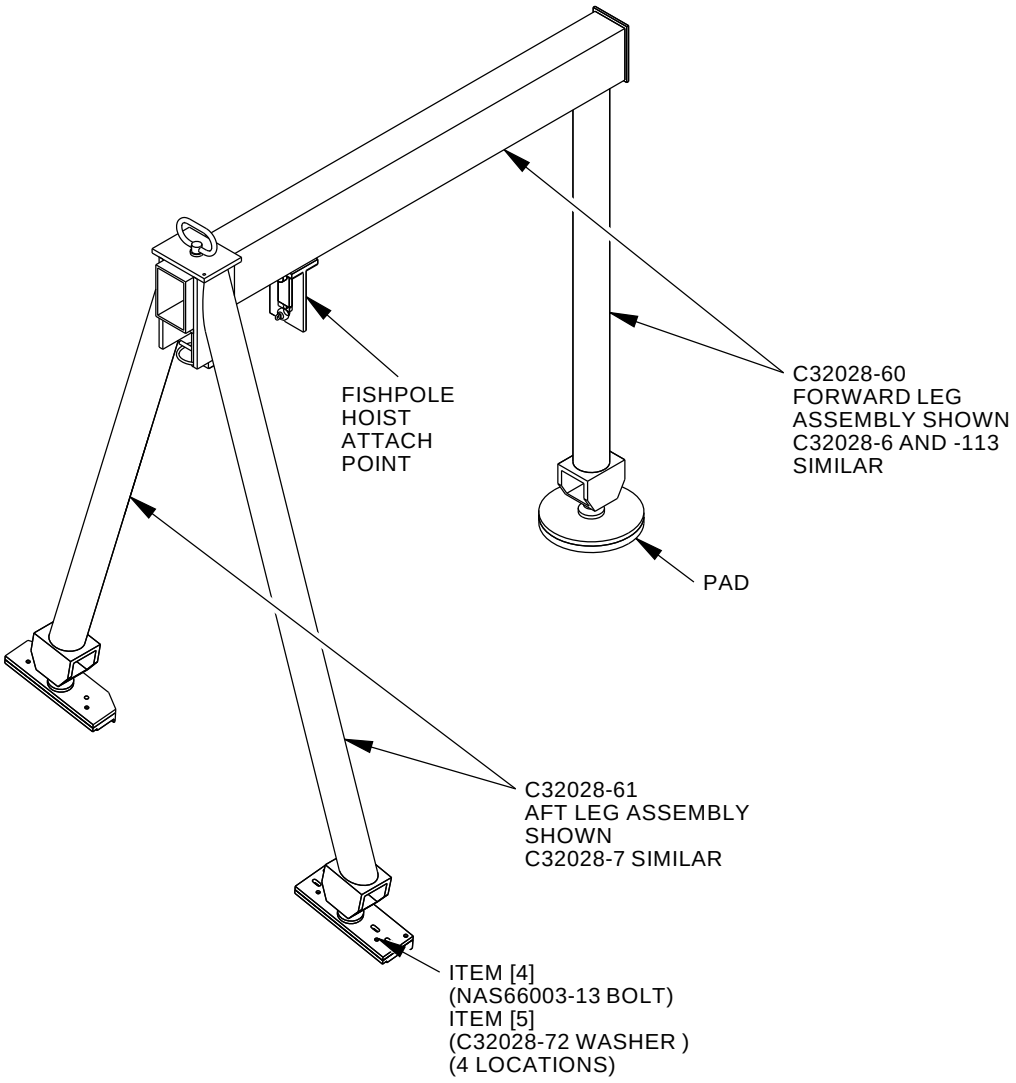

TRIPOD/BEAM ASSEMBLY
(COMMON TO C32028-1,-3,-58,-59,-110 AND -111)

G

H86200 S0006831880_V3

Main Landing Gear Walking Beam Assembly Removal/Installation Equipment
Figure 1 (Sheet 4 of 4)

BOEING PROPRIETARY - Copyright © Unpublished Work - See title page for details

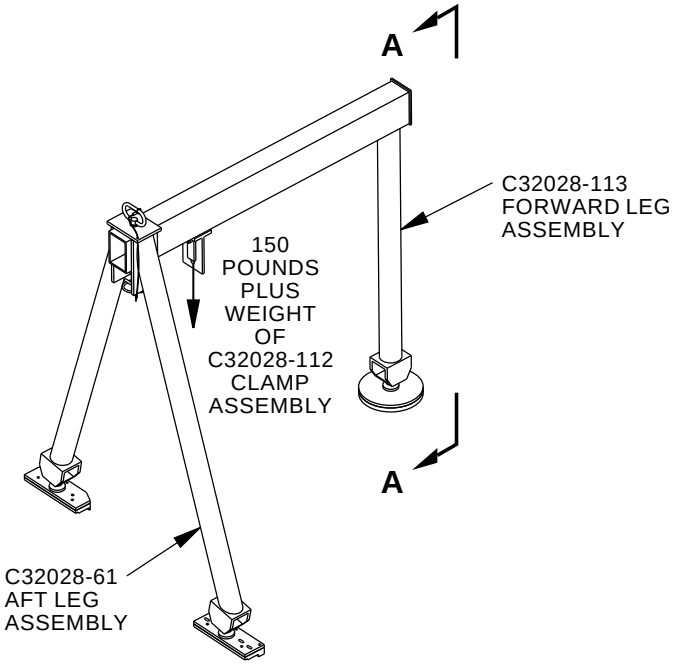

C32028-110 OR -111 PROOF LOAD DIAGRAM 1 (EXAMPLE)

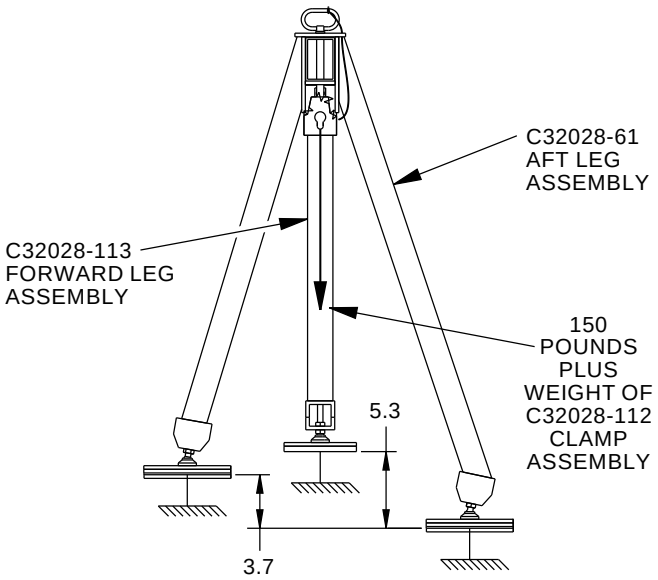

A-A

2425680 S0000560344_V1

C32028-109, -110 and -111 Proof Load Diagrams (Examples)
Figure 2 (Sheet 1 of 2)

BOEING PROPRIETARY - Copyright © Unpublished Work - See title page for details

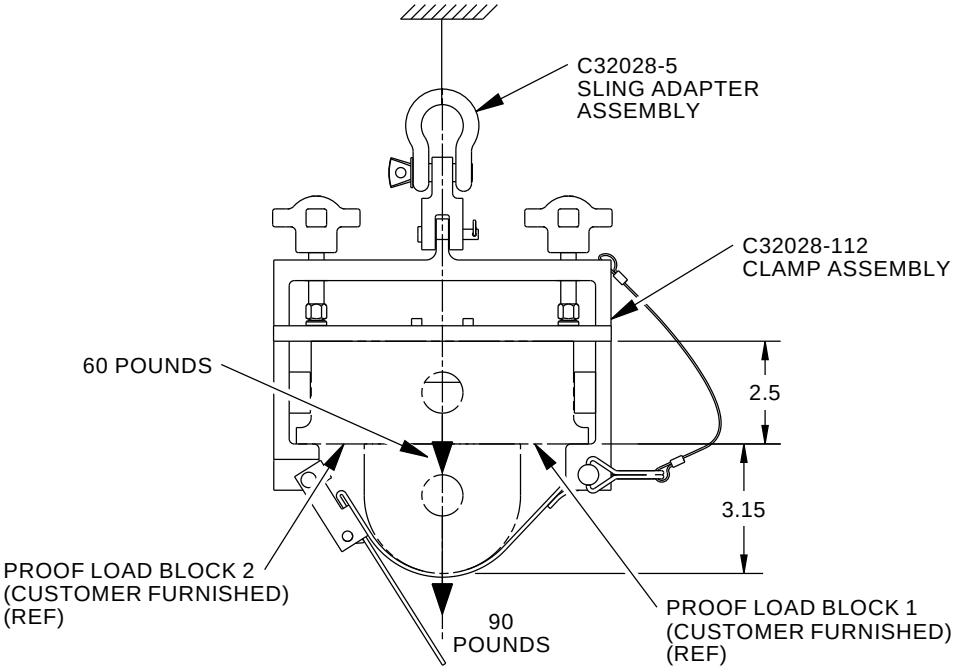

C32028-109,-110 AND -111 PROOF LOAD DIAGRAM 2
(EXAMPLE)

2425691 S0000560345_V1

C32028-109, -110 and -111 Proof Load Diagrams (Examples)
Figure 2 (Sheet 2 of 2)

BOEING PROPRIETARY - Copyright © Unpublished Work - See title page for details

REPAIRABLE/REPLACEABLE PARTS			
ITEM NUMBER	PART NUMBER	NOMENCLATURE	VENDOR CODE
[1]	C32028-89 (11-045)	CLEVIS PIN	96652
[2]	C32028-27 (28-02)	SNAPPER PIN	96652
[3]	C32028-90 (21-03)	HAIRPIN COTTER	96652
[4]	C32028-88 (NAS6603-13)	BOLT	- - -
[5]	C32028-72	WASHER	- - -

BOEING PROPRIETARY - Copyright © Unpublished Work - See title page for details

PART NUMBER: C32036-1, -45, -46, -88

NAME: FIXTURE EQUIPMENT - ACTUATOR ASSEMBLIES, NOSE LANDING GEAR

AIRPLANE MAINTENANCE: NO

COMPONENT MAINTENANCE: YES

CMM 32-33-12, CMM 32-33-22, CMM 32-51-52

USAGE & DESCRIPTION: The C32036-1 (option), C32036-45 (option), C32036-46 (option) and C32036-88 (preferred) fixture equipments are used during component maintenance on all 737 airplanes, except 737-100 thru -500 airplanes.

C32036 is used to remove or install the seals in the nose landing gear actuators.

The C32036-1 fixture equipment is used to remove or install the seals in the nose landing gear retract and lock actuators only.

The C32036-45 fixture equipment is used to remove or install the seals in the nose landing gear steering actuators only.

C32036-46 (option) or C32036-88 (preferred) is used to remove or install the seals in all the nose landing gear actuators.

Refer to CMM 32-33-12, CMM 32-33-22, CMM 32-51-52 and the current C32036 drawing for complete usage instructions.

C32036-1, -45 ,-46 and -88 consist of:

C32036-1		
QUANTITY	**NOMENCLATURE**	**PART NUMBER**
1	STAND ASSEMBLY	C32036-2
1	CLAMP STAND ASSEMBLY	C32036-5
1	PIN	C32036-6
1	CROWFOOT ASSEMBLY	C32036-7
1	LARGE CROWFOOT	C32036-8
1	SMALL SPANNER WRENCH	C32036-9
1	LARGE SPANNER WRENCH	C32036-10
2	O-RING PICK	C32036-29
1	SMALL CROWFOOT	C32036-80
1	STORAGE BOX	

C32036-45		
QUANTITY	**NOMENCLATURE**	**PART NUMBER**
1	CLAMP HALF ASSEMBLY	C32036-47
1	THREADED CLAMP HALF ASSEMBLY	C32036-48
1	BLOCK ASSEMBLY	C32036-49

BOEING PROPRIETARY - Copyright © Unpublished Work - See title page for details

(Continued)

C32036-45		
QUANTITY	NOMENCLATURE	PART NUMBER
1	ROD CLAMP ASSEMBLY	C32036-50
1	SLEEVE ASSEMBLY	C32036-51
4	SCREW	C32036-52
1	SMALL SPANNER WRENCH	C32036-53
1	LARGE SPANNER WRENCH	C32036-54
1	SOCKET	C32036-55
1	STORAGE BOX	

C32036-46		
QUANTITY	NOMENCLATURE	PART NUMBER
1	STAND ASSEMBLY	C32036-2
1	CLAMP STAND ASSEMBLY	C32036-5
1	PIN	C32036-6
1	CROWFOOT ASSEMBLY	C32036-7
1	LARGE CROWFOOT	C32036-8
1	SMALL SPANNER WRENCH	C32036-9
1	LARGE SPANNER WRENCH	C32036-10
2	O-RING PICK	C32036-29
1	SMALL CROWFOOT	C32036-80
1	CLAMP HALF ASSEMBLY	C32036-47
1	THREADED CLAMP HALF ASSEMBLY	C32036-48
1	BLOCK ASSEMBLY	C32036-49
1	ROD CLAMP ASSEMBLY	C32036-50
1	SLEEVE ASSEMBLY	C32036-51
4	SCREW	C32036-52
1	SMALL SPANNER WRENCH	C32036-53
1	LARGE SPANNER WRENCH	C32036-54
1	SOCKET	C32036-55
1	STORAGE BOX	

C32036-88		
QUANTITY	NOMENCLATURE	PART NUMBER
1	STAND ASSEMBLY	C32036-2
1	CLAMP STAND ASSEMBLY	C32036-5
1	PIN	C32036-6
1	CROWFOOT ASSEMBLY	C32036-7
1	LARGE CROWFOOT	C32036-8
1	SMALL SPANNER WRENCH	C32036-9

BOEING PROPRIETARY - Copyright © Unpublished Work - See title page for details

(Continued)

C32036-88		
QUANTITY	NOMENCLATURE	PART NUMBER
1	LARGE SPANNER WRENCH	C32036-10
2	O-RING PICK	C32036-29
1	SMALL CROWFOOT	C32036-80
1	CLAMP HALF ASSEMBLY	C32036-47
1	THREADED CLAMP HALF ASSEMBLY	C32036-48
1	BLOCK ASSEMBLY	C32036-49
1	ROD CLAMP ASSEMBLY	C32036-50
1	SLEEVE ASSEMBLY	C32036-51
4	SCREW	C32036-52
1	SMALL SPANNER WRENCH	C32036-53
1	LARGE SPANNER WRENCH	C32036-54
1	SOCKET	C32036-55
1	SOCKET	C32036-89
1	STORAGE BOX	

WEIGHT: C32036-1 - 24 lbs (10.9 kg)
C32036-45 - 10 lbs (4.5 kg)
C32036-46, -88 - 34 lbs (15.4 kg)

DIMENSIONS: C32036-1 - 9 x 20 x 24 inches (229 x 508 x 610 mm)
C32036-45 - 5 x 7 x 11 inches (127 x 178 x 280 mm)
C32036-46, -88 - 9 x 24 x 24 inches (229 x 610 x 610 mm)

BOEING PROPRIETARY - Copyright © Unpublished Work - See title page for details

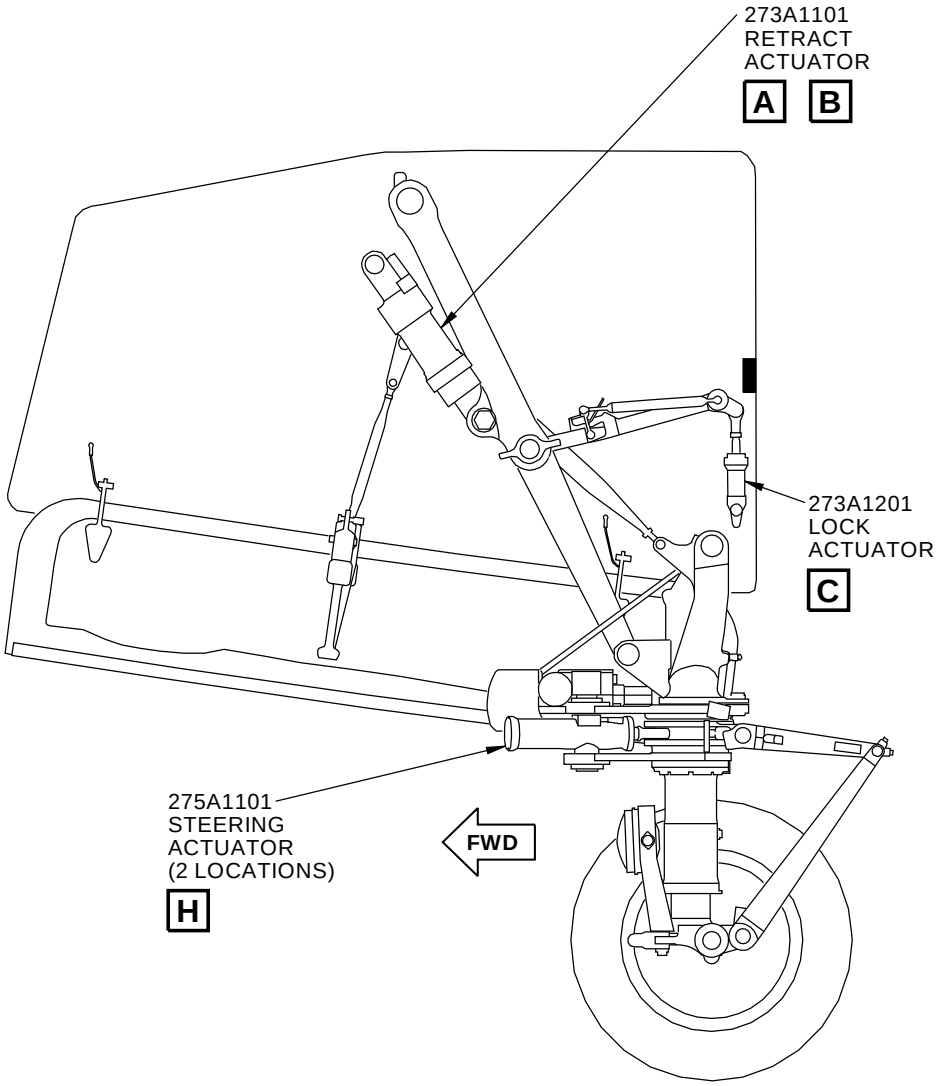

737-700
NOSE LANDING GEAR
(EXAMPLE)

2422394 S0000560437_V1

Nose Landing Gear Actuator Assemblies Fixture Equipment
Figure 1 (Sheet 1 of 5)

BOEING PROPRIETARY - Copyright © Unpublished Work - See title page for details

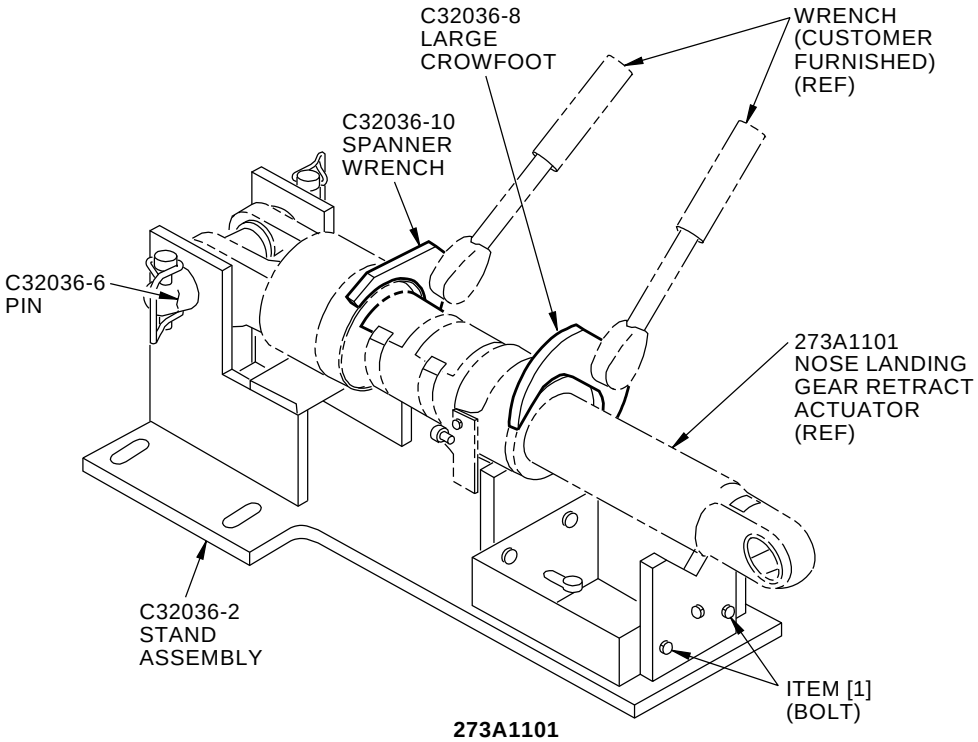

273A1101
NOSE LANDING GEAR RETRACT ACTUATOR

A

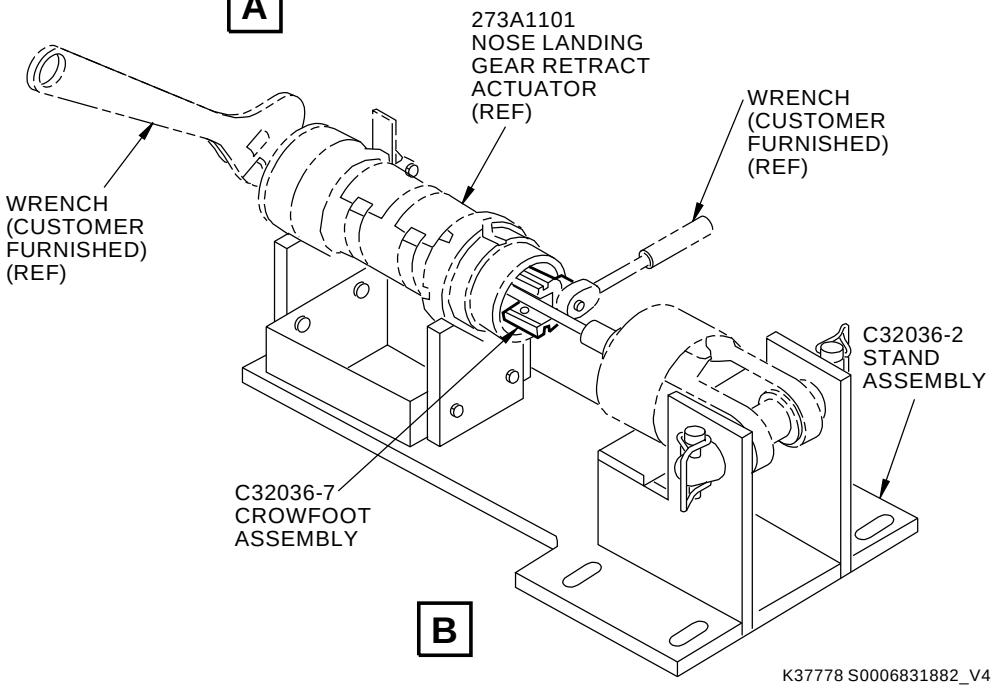

B

K37778 S0006831882_V4

Nose Landing Gear Actuator Assemblies Fixture Equipment
Figure 1 (Sheet 2 of 5)

BOEING PROPRIETARY - Copyright © Unpublished Work - See title page for details

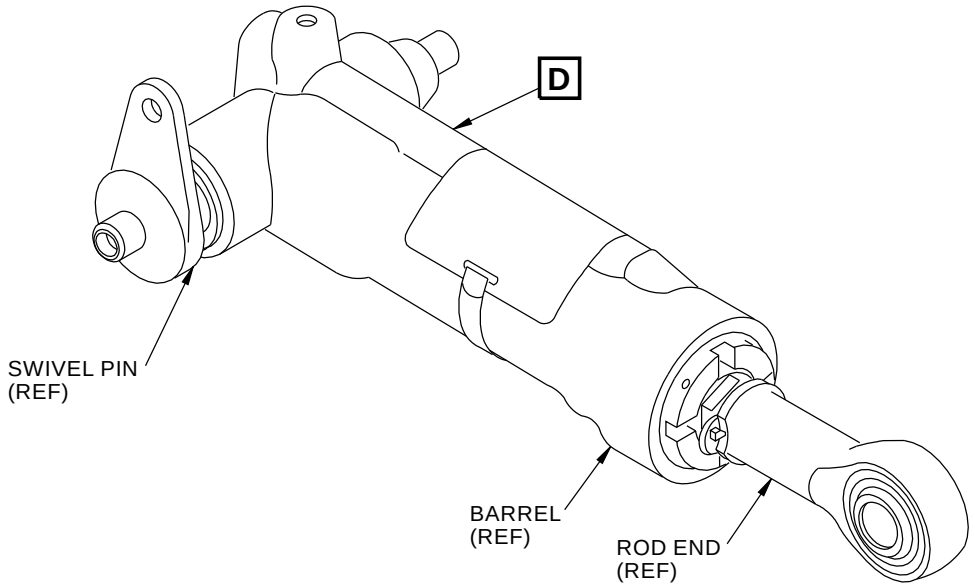

273A1201
NOSE LANDING GEAR LOCK ACTUATOR ASSEMBLY

C

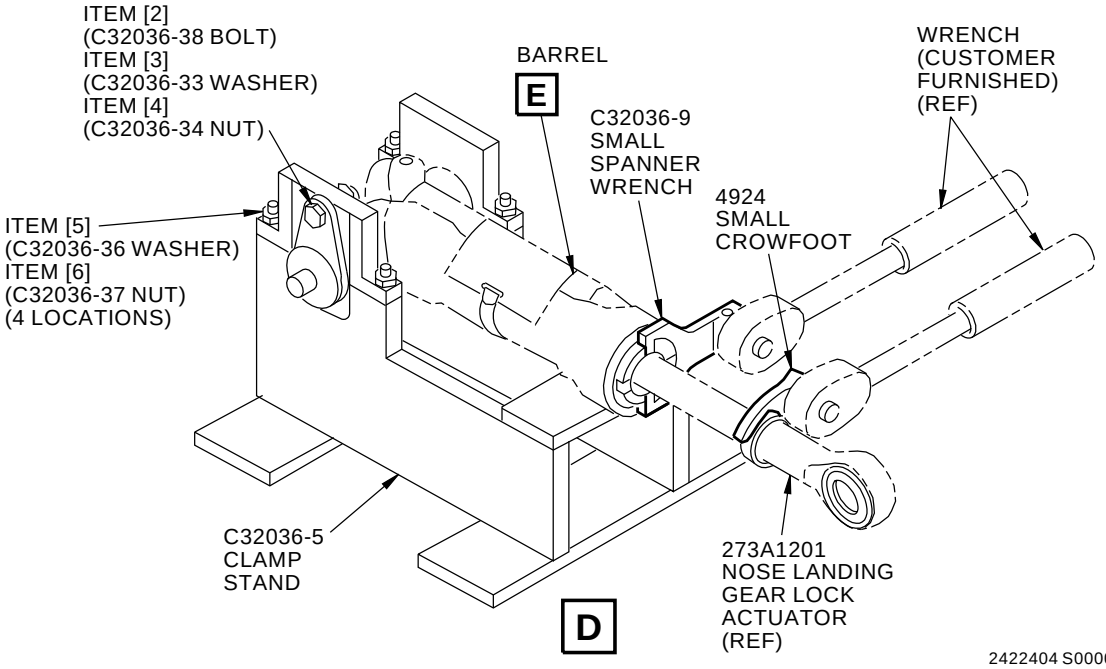

Nose Landing Gear Actuator Assemblies Fixture Equipment
Figure 1 (Sheet 3 of 5)

BOEING PROPRIETARY - Copyright © Unpublished Work - See title page for details

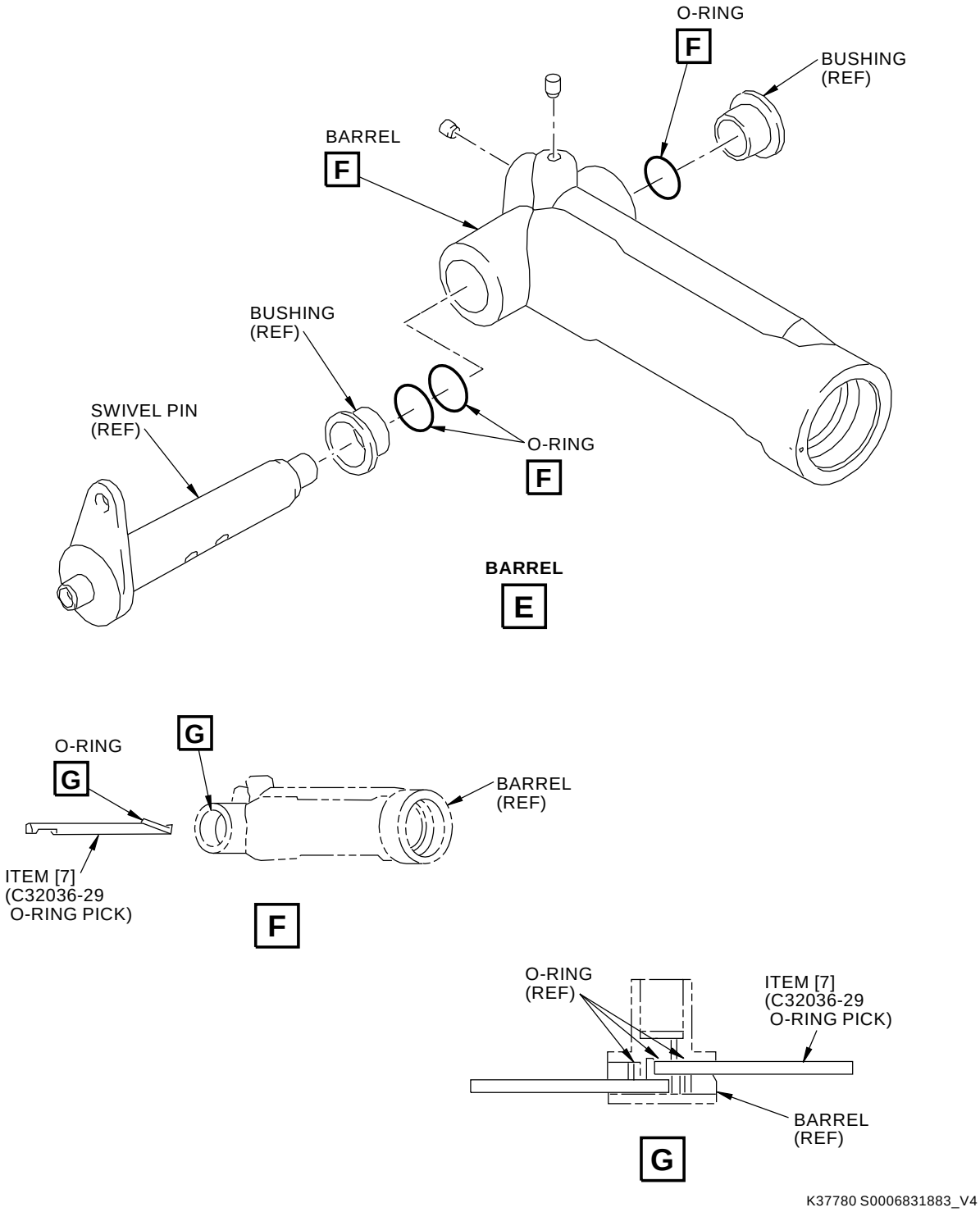

Nose Landing Gear Actuator Assemblies Fixture Equipment
Figure 1 (Sheet 4 of 5)

BOEING PROPRIETARY - Copyright © Unpublished Work - See title page for details

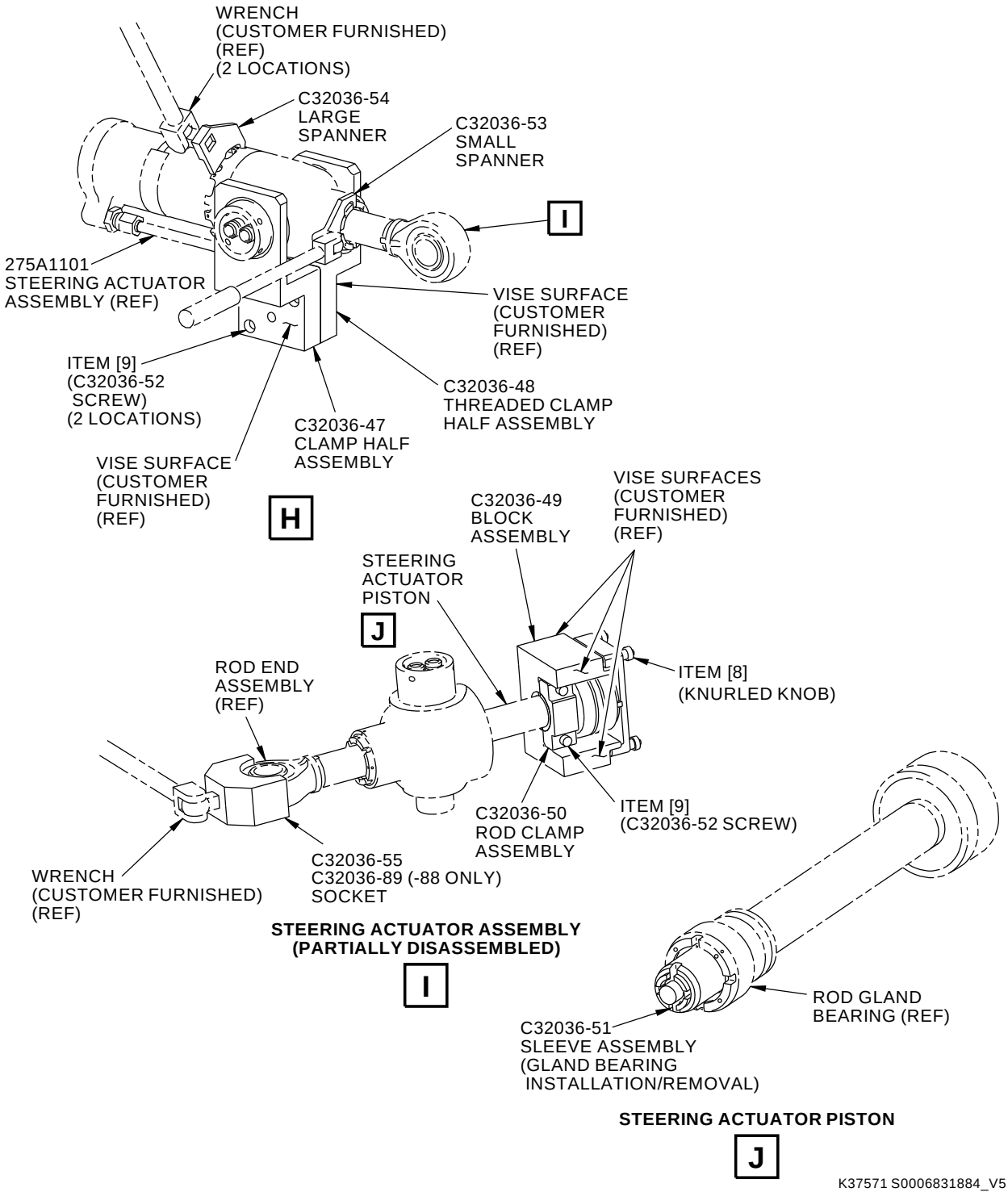

Nose Landing Gear Actuator Assemblies Fixture Equipment
Figure 1 (Sheet 5 of 5)

BOEING PROPRIETARY - Copyright © Unpublished Work - See title page for details

REPAIRABLE/REPLACEABLE PARTS			
ITEM NUMBER	PART NUMBER	NOMENCLATURE	VENDOR CODE
[1]	C32036-32	BOLT	- - -
[2]	C32036-38	BOLT	- - -
[3]	C32036-33	WASHER	- - -
[4]	C32036-34	NUT	- - -
[5]	C32036-36	WASHER	- - -
[6]	C32036-37	NUT	- - -
[7]	C32036-29	O-RING PICK	- - -
I [8]	C32036-87	KNURLED KNOB	01599
[9]	C32036-52	SCREW	- - -

BOEING PROPRIETARY - Copyright © Unpublished Work - See title page for details

PART NUMBER: C32038-55

NAME: ROD END BEARING REMOVAL/INSTALLATION EQUIPMENT - ACTUATORS MAIN LANDING GEAR (MLG)

AIRPLANE MAINTENANCE: NO

COMPONENT MAINTENANCE: YES

CMM 32-32-37, CMM 32-32-42, CMM 32-32-52

USAGE & DESCRIPTION: The C32038-55 rod end removal/installation equipment is used during component maintenance on all 737 airplanes, except 737-100 thru -500 airplanes.

C32038 is used to remove or install the rod end bearings during maintenance of the main landing gear (MLG) actuator. C32038 is also used to disassemble the 273A2201 MLG downlock actuator assembly, the 273A2101 MLG retract actuator assembly and the 273A2501 MLG actuator assembly.

Refer to CMM 32-32-37, CMM 32-32-42, CMM 32-32-52 and the current C32038 drawing for complete usage instructions.

C32038-55 consists of:

C32038-55		
QUANTITY	**NOMENCLATURE**	**PART NUMBER**
1	ACTUATOR RETAINER ASSEMBLY	C32038-4
1	UPLOCK ROD RETAINER ASSEMBLY	C32038-5
1	DOWNLOCK ROD RETAINER ASSEMBLY	C32038-6
1	VISE CLAMP ASSEMBLY	C32038-7
1	RETRACT WRENCH ASSEMBLY	C32038-37
1	RETRACT SPANNER ASSEMBLY	C32038-39
1	DOWNLOCK SPANNER	C32038-41
1	UPLOCK SPANNER	C32038-42
1	DOWNLOCK ROD END WRENCH	C32038-43
1	UPLOCK ROD END WRENCH	C32038-44
1	RETRACT ROD END WRENCH	C32038-45
1	STAND ASSEMBLY	C32038-56
1	V-BLOCK ASSEMBLY	C32038-57
1	STORAGE BOX	

WEIGHT: 220 lbs (100 kg)

DIMENSIONS: 10 x 20 x 48 inches (254 x 508 x 1219 mm)

NOTE: C32038-55 supersedes C32038-1.

BOEING PROPRIETARY - Copyright © Unpublished Work - See title page for details

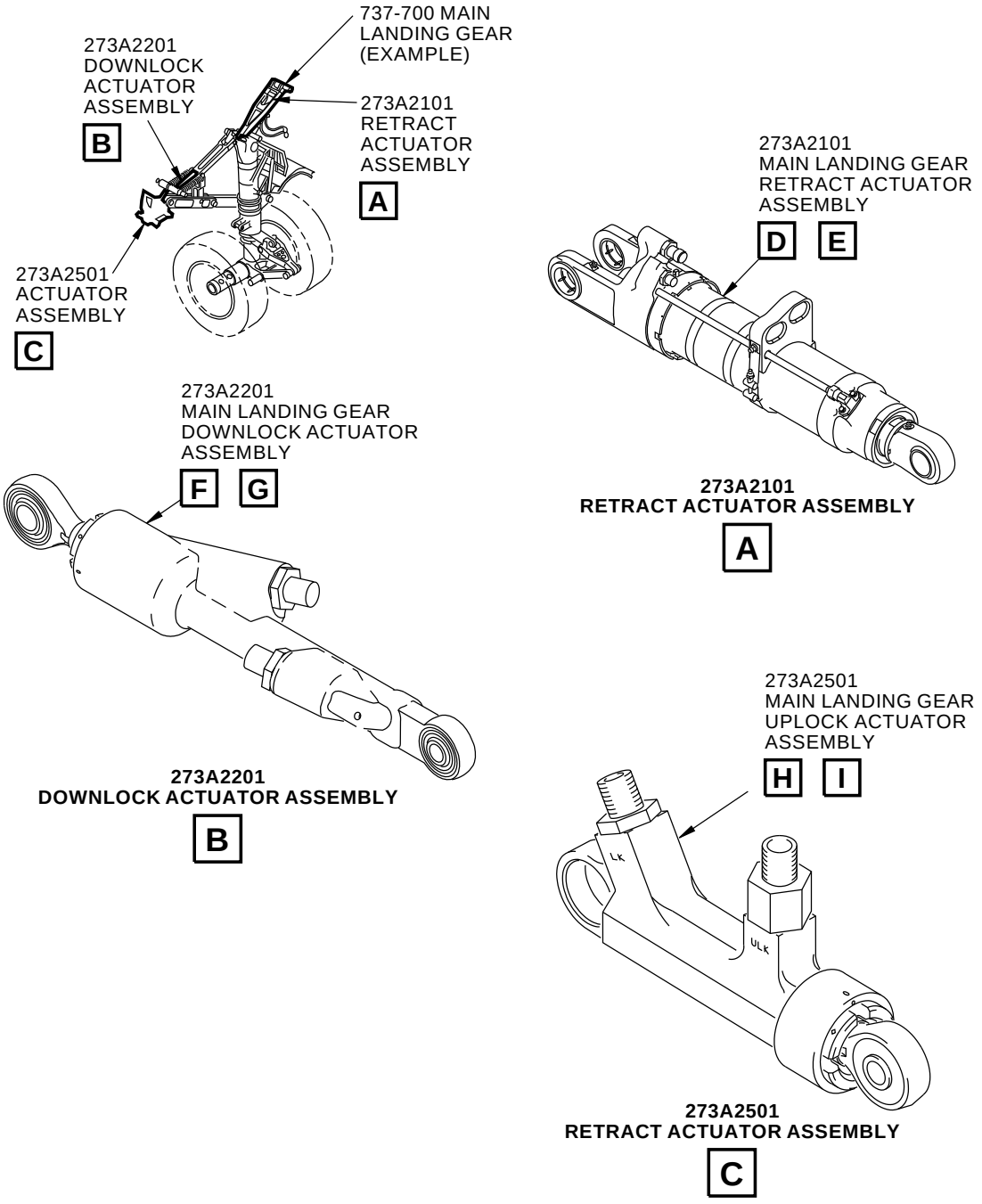

K38034 S0006831886_V4

Main Landing Gear Actuator Locations
Figure 1

BOEING PROPRIETARY - Copyright © Unpublished Work - See title page for details

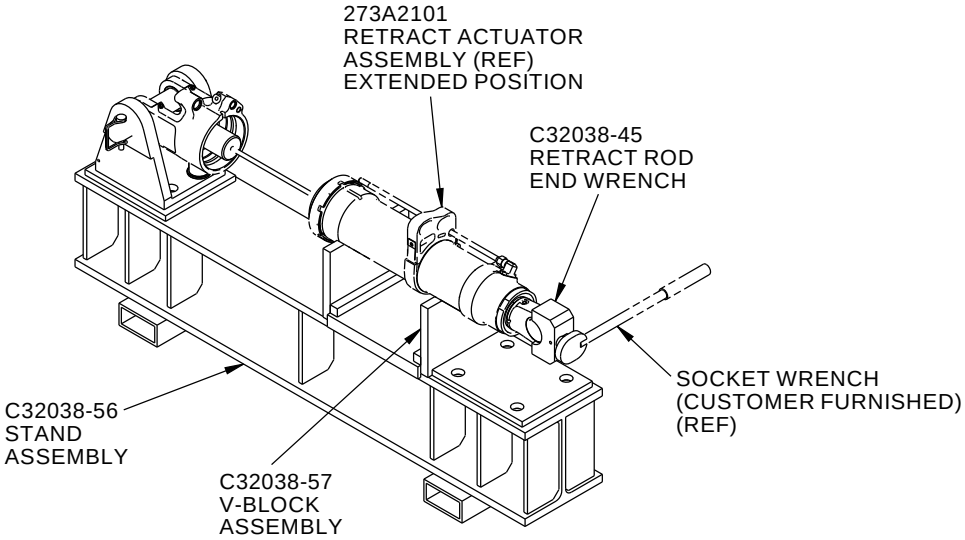

D

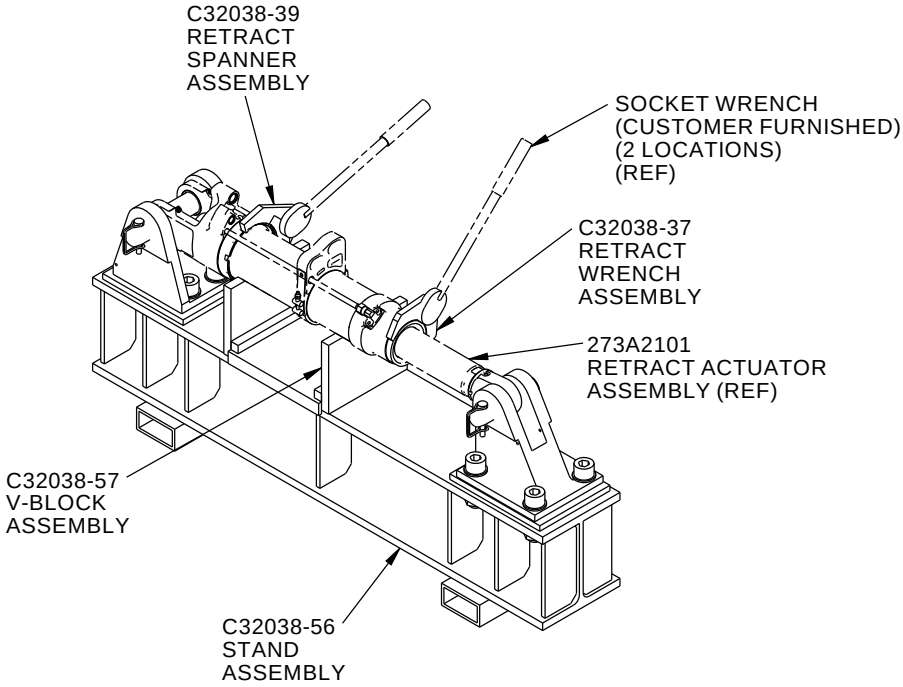

E

1559546 S0000288124_V3

Actuator Equipment Usage
Figure 2 (Sheet 1 of 3)

BOEING PROPRIETARY - Copyright © Unpublished Work - See title page for details

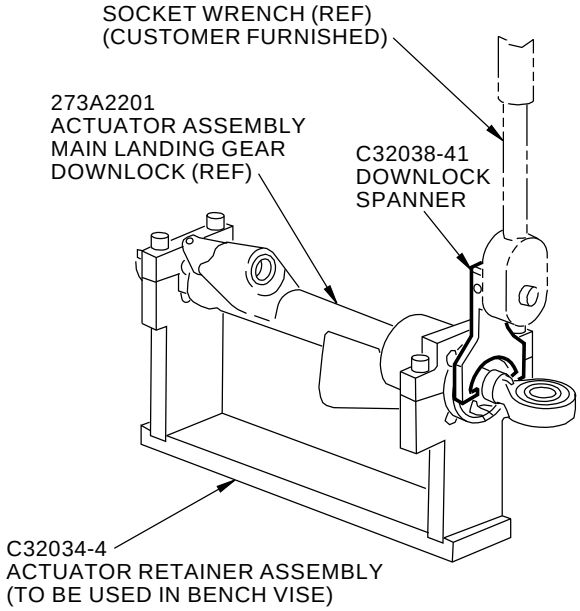

F

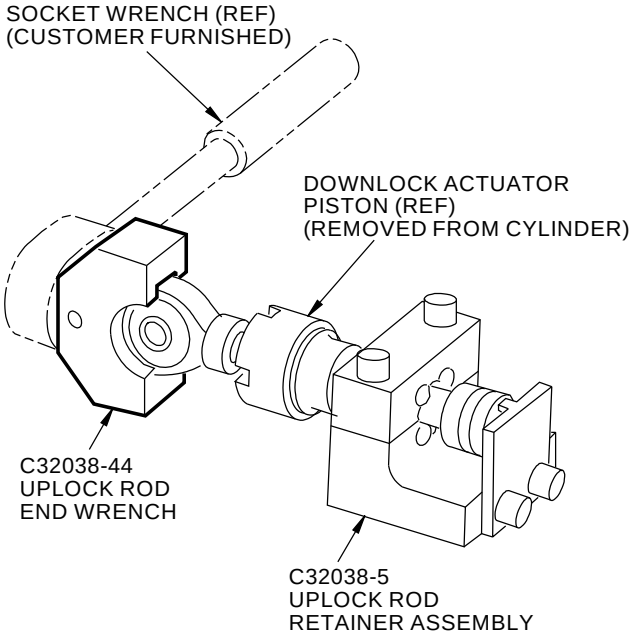

G

K38313 S0006831888_V4

Actuator Equipment Usage
Figure 2 (Sheet 2 of 3)

BOEING PROPRIETARY - Copyright © Unpublished Work - See title page for details

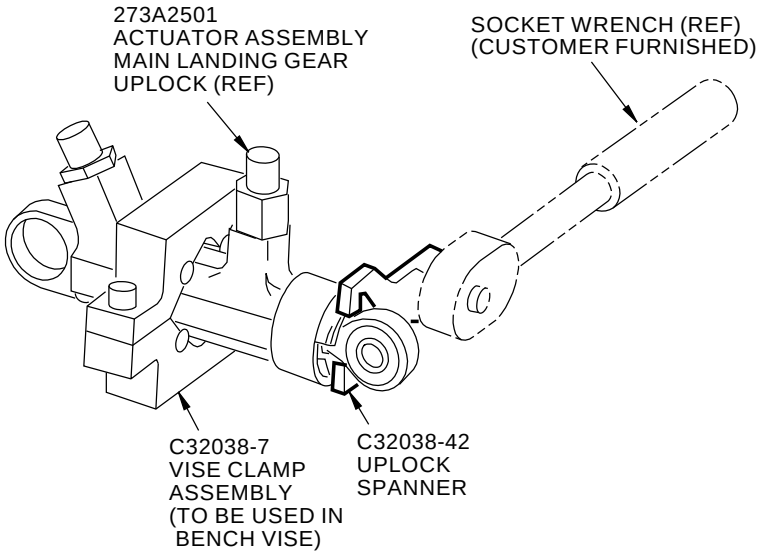

H

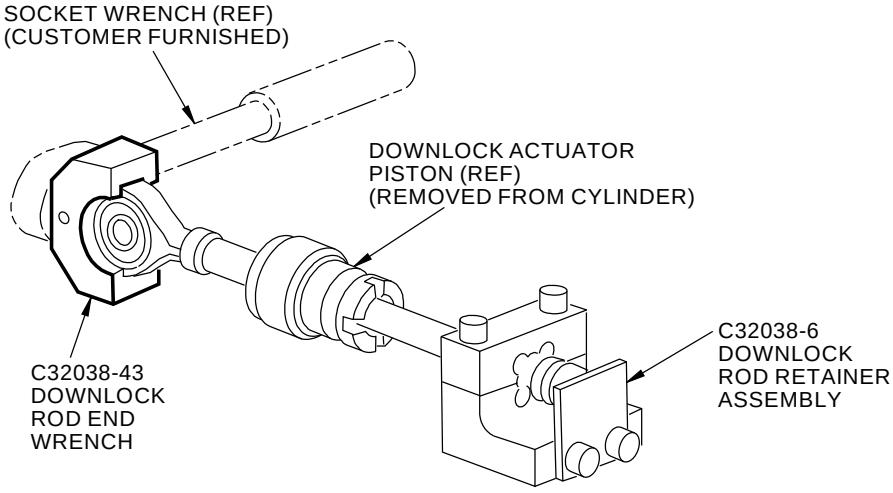

I

K38262 S0006831887_V4

Actuator Equipment Usage
Figure 2 (Sheet 3 of 3)

BOEING PROPRIETARY - Copyright © Unpublished Work - See title page for details

PART NUMBER: G32021-18

NAME: FORCE GAUGE EQUIPMENT - LANDING GEAR LEVER

AIRPLANE MAINTENANCE: YES

AMM 32-31-00

COMPONENT MAINTENANCE: NO

OTHER MANUALS: YES

FIM 32-30-00

USAGE & DESCRIPTION: The G32021-18 force gauge equipment is used on all 737-100 thru -900 airplanes.

G32021 force gauge equipment is used to measure forces required for movement of the flight deck landing gear lever.

Refer to AMM 32-31-00, the Fault Isolation Manual (FIM) 32-30-00 and the current G32021 drawing for complete usage instructions.

G32021-18 consists of:

G32021-18		
QUANTITY	**NOMENCLATURE**	**PART NUMBER**
1	SLIDE ASSEMBLY	G32021-2
1	DETENT YOKE ASSEMBLY	G32021-6
1	SPRING CLIP ASSEMBLY	G32021-11
1	GAUGE ADAPTER	G32021-19
1	BALL LOCK PIN	CL-4-BLPL-2.0-C
1	FORCE GAUGE	FDK 20
1	STORAGE BOX	

WEIGHT: 1 lb (0.45 kg)

DIMENSIONS: 4 x 6 x 6 inches (102 x 152 x 152 mm)

NOTE: G32021-18 supersedes G32021-1.

BOEING PROPRIETARY - Copyright © Unpublished Work - See title page for details

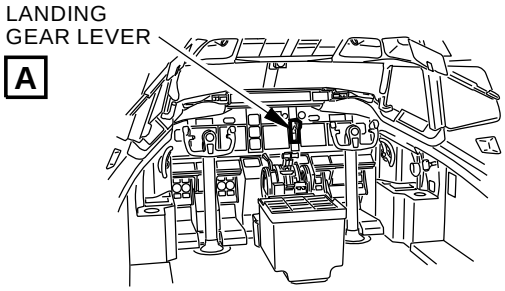

737-700 FLIGHT DECK
(EXAMPLE)

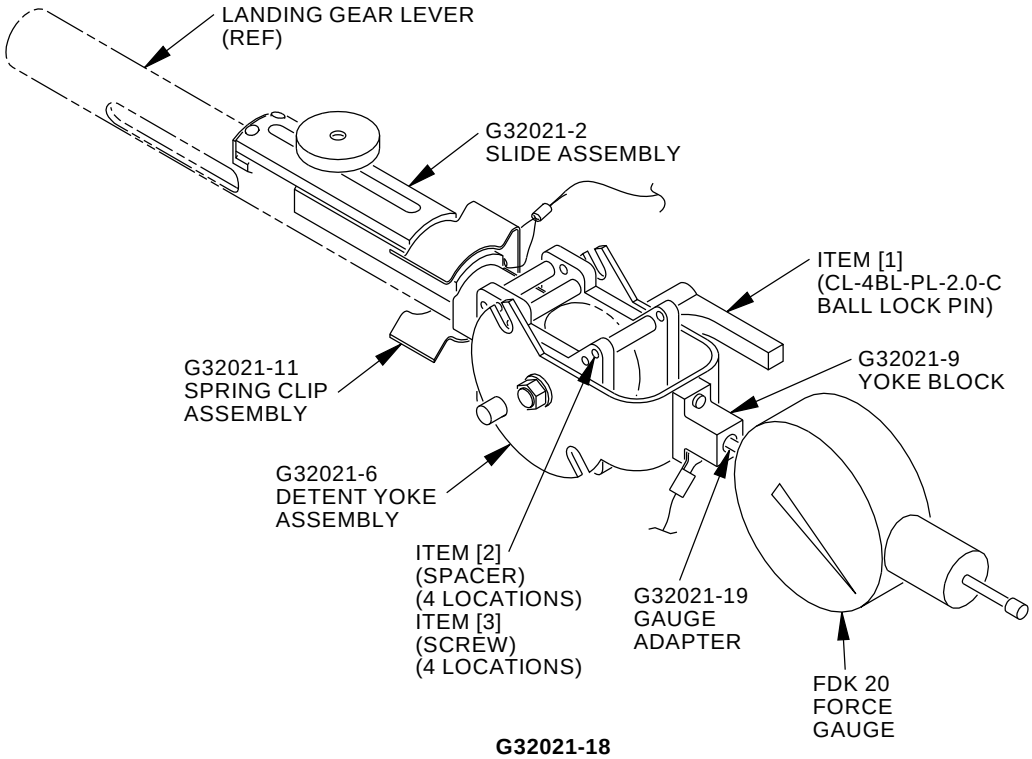

G32021-18
LANDING GEAR LEVER

A

M27229 S0006831890_V4

Landing Gear Lever Force Gauge Equipment
Figure 1

BOEING PROPRIETARY - Copyright © Unpublished Work - See title page for details

REPAIRABLE/REPLACEABLE PARTS			
ITEM NUMBER	PART NUMBER	NOMENCLATURE	VENDOR CODE
[1]	CL-4-BLPL-2.0-C	BALL LOCK PIN	99862
[2]	NAS43DD0-58N	SPACER	- - -
[3]	NAS600-20P	SCREW	- - -

BOEING PROPRIETARY - Copyright © Unpublished Work - See title page for details

PART NUMBER: C32046-1

NAME: HOLDING FIXTURE EQUIPMENT - SHIMMY DAMPER ASSEMBLY, MAIN LANDING GEAR

AIRPLANE MAINTENANCE: NO

COMPONENT MAINTENANCE: YES

CMM 32-30-62

USAGE & DESCRIPTION: The C32046-1 main landing gear shimmy damper assembly holding fixture equipment is used on all 737-600 thru -900 airplanes.

C32046 used to support the 737 main landing gear shimmy adapter assembly during test and overhaul. C32046 equipment consists of holding fixture assembly to hold the main landing gear shimmy damper and a balance assembly attached to the unit under test. Figure 1 shows the C32046-2 holding equipment with the shimmy damper installed.

Figure 2 shows the C32046-3 balance assembly.

Refer to the current C32046 tool drawing and CMM 32-30-62 for complete usage instructions.

C32046-1 consists of:

C32046-1		
QUANTITY	**NOMENCLATURE**	**PART NUMBER**
1	HOLDING FIXTURE ASSEMBLY	C32046-2
1	BALANCE ASSEMBLY	C32046-3
1	PISTON SHAFT	C32046-4
1	WEIGHT	C32046-5
3	WASHER	C32046-6
1	LARGE WASHER	C32046-7
3	BOLT	NAS627-4
1	COUPLING NUT	CL-4-CN
1	KNURLED KNOB THUMB SCREW	KTS-4202
1	STORAGE BOX	

WEIGHT: 68 lbs (31 kg)

DIMENSIONS: 13 x 16 x 62 inches (330 x 406 x 1575 mm)

BOEING PROPRIETARY - Copyright © Unpublished Work - See title page for details

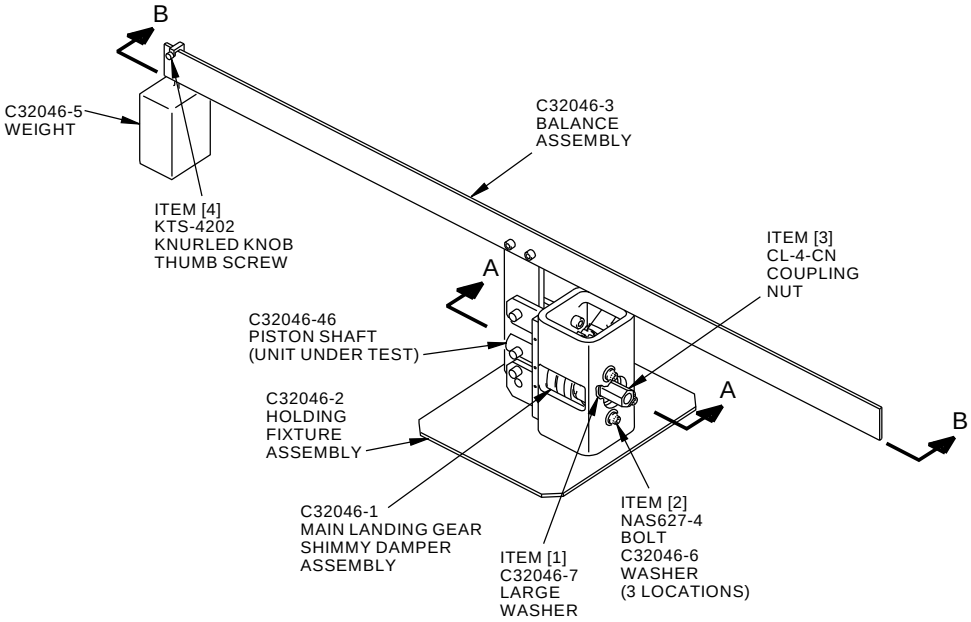

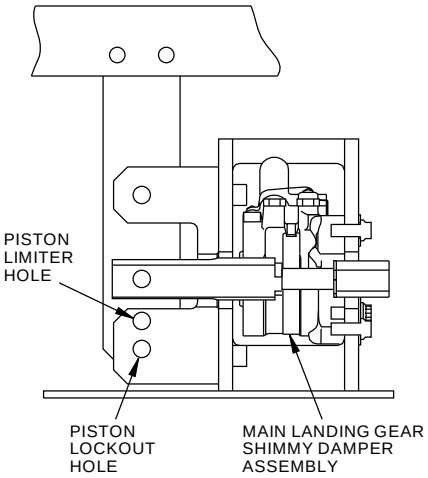

C32046-1
SHIMMY DAMPER ASSEMBLY
A-A

W27509 S0006831892_V3

Holding Fixture Equipment - Shimmy Damper Assembly
Figure 1

BOEING PROPRIETARY - Copyright © Unpublished Work - See title page for details

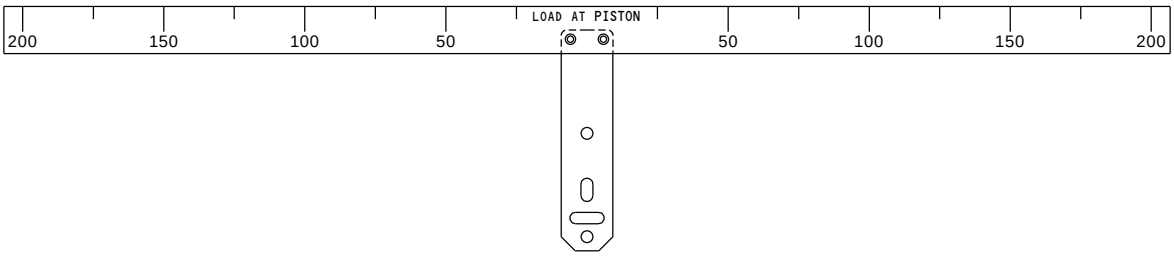

G32046-3
BALANCE ASSEMBLY
B-B

W29657 S0006831893_V4

Balance Assembly
Figure 2

BOEING PROPRIETARY - Copyright © Unpublished Work - See title page for details

REPAIRABLE/REPLACEABLE PARTS			
ITEM NO.	PART NO.	NOMENCLATURE	VENDOR CODE
[1]	C32046-7	LARGE WASHER	- - -
[2]	NAS627-4	BOLT	- - -
[3]	CL-4-CN	COUPLING NUT	CARR LANE
[4]	KTS - 4202	KNURLED KNOB THUMB SCREW	REID TOOL SUPPLY, MI

BOEING PROPRIETARY - Copyright © Unpublished Work - See title page for details

PART NUMBER: C32048-1

NAME: ADAPTER ASSEMBLY - UPLOCK, MAIN LANDING GEAR

AIRPLANE MAINTENANCE: YES

AMM 32-34-00

COMPONENT MAINTENANCE: NO

USAGE & DESCRIPTION: The C32048-1 main landing gear uplock adapter assembly is used on all 737-600 thru -900 airplanes.

C32048 is used to rotate the main landing gear uplock hook assembly over-center to the up and locked position. A customer furnished 1/2 inch square ratchet wrench is required.

Refer to the current C32048 tool drawing and AMM 32-34-00 for complete usage instructions.

C32048-1 consists of:

C32048-1		
QUANTITY	**NOMENCLATURE**	**PART NUMBER**
1	ADAPTER ASSEMBLY	C32048-2
1	STORAGE BOX	

WEIGHT: 2 lbs (0.9 kg)

DIMENSIONS: 2 x 2 x 4 inches (51 x 51 x 102 mm)

BOEING PROPRIETARY - Copyright © Unpublished Work - See title page for details

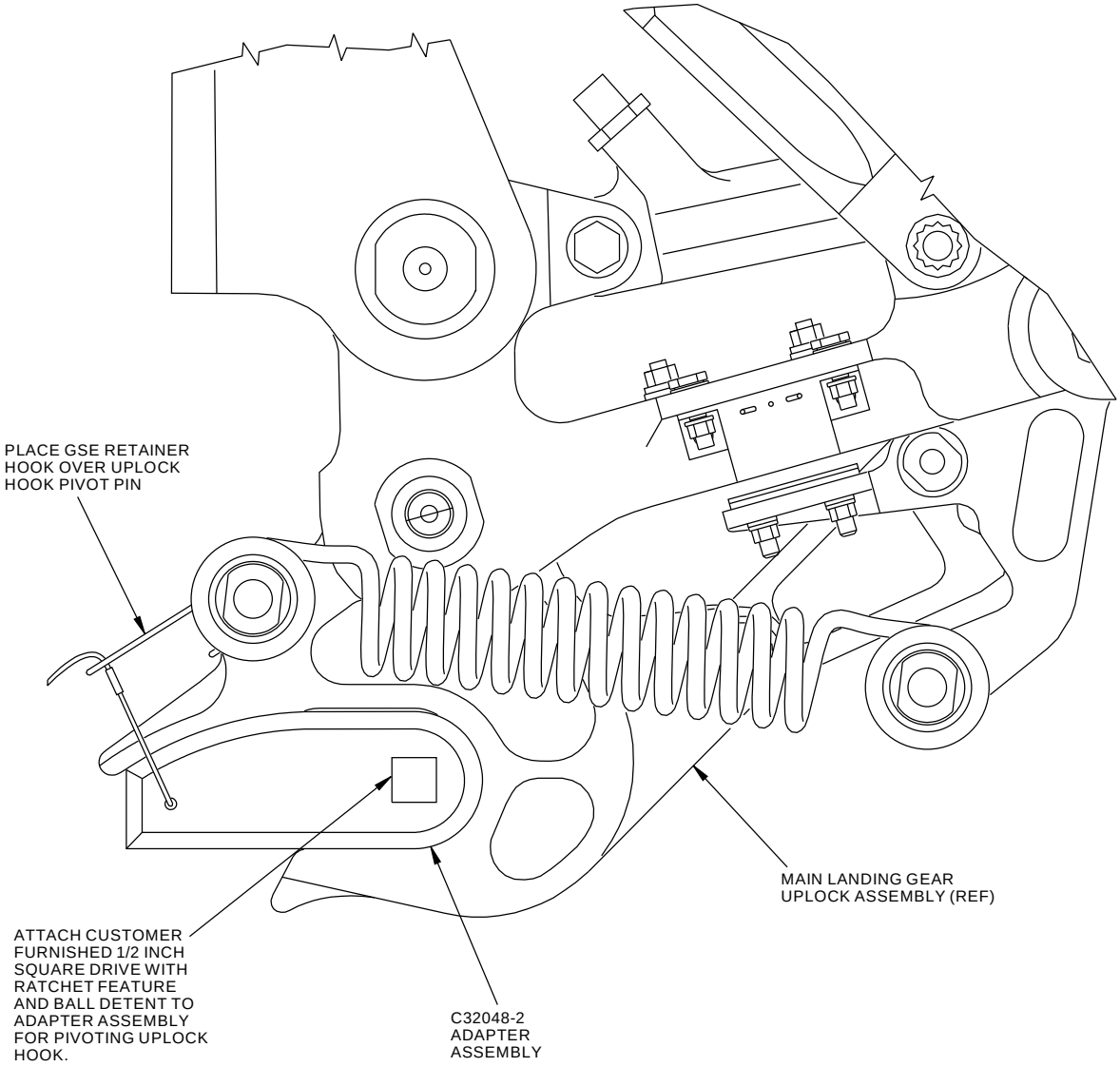

C32048-1
ADAPTER ASSEMBLY - UPLOCK, MAIN LANDING GEAR

408677 S0006831898_V3

Adapter Assembly - Uplock, MLG
Figure 1

BOEING PROPRIETARY - Copyright © Unpublished Work - See title page for details

PART NUMBER: J32037-106

NAME: SPRING REMOVAL/INSTALLATION EQUIPMENT - MAIN LANDING GEAR AND NOSE LANDING GEAR

AIRPLANE MAINTENANCE: YES

AMM 32-32-31

COMPONENT MAINTENANCE: YES

CMM 32-32-34

USAGE & DESCRIPTION: J32037-106 spring removal/installation equipment is used on all 737 airplanes except 737-100 thru -500 airplanes.

J32037 equipment is used to remove and/or install the nose landing gear lock link spring, the main gear uplock spring, drag brace spring, side brace spring and spring cartridge

Refer to AMM 32-32-31, CMM 32-32-34 and the current J32037 drawing for complete usage instructions.

J32037-106 consists of:

J32037-106		
QUANTITY	**NOMENCLATURE**	**PART NUMBER**
1	BASE TOOL ASSEMBLY	J32037-92
2	SPRING FITTING	J32037-111
1	STORAGE BOX	

WEIGHT: 7 lbs (3 kg)

DIMENSIONS: 16 x 6 x 3 inches (406 x 152 x 76 mm)

BOEING PROPRIETARY - Copyright © Unpublished Work - See title page for details

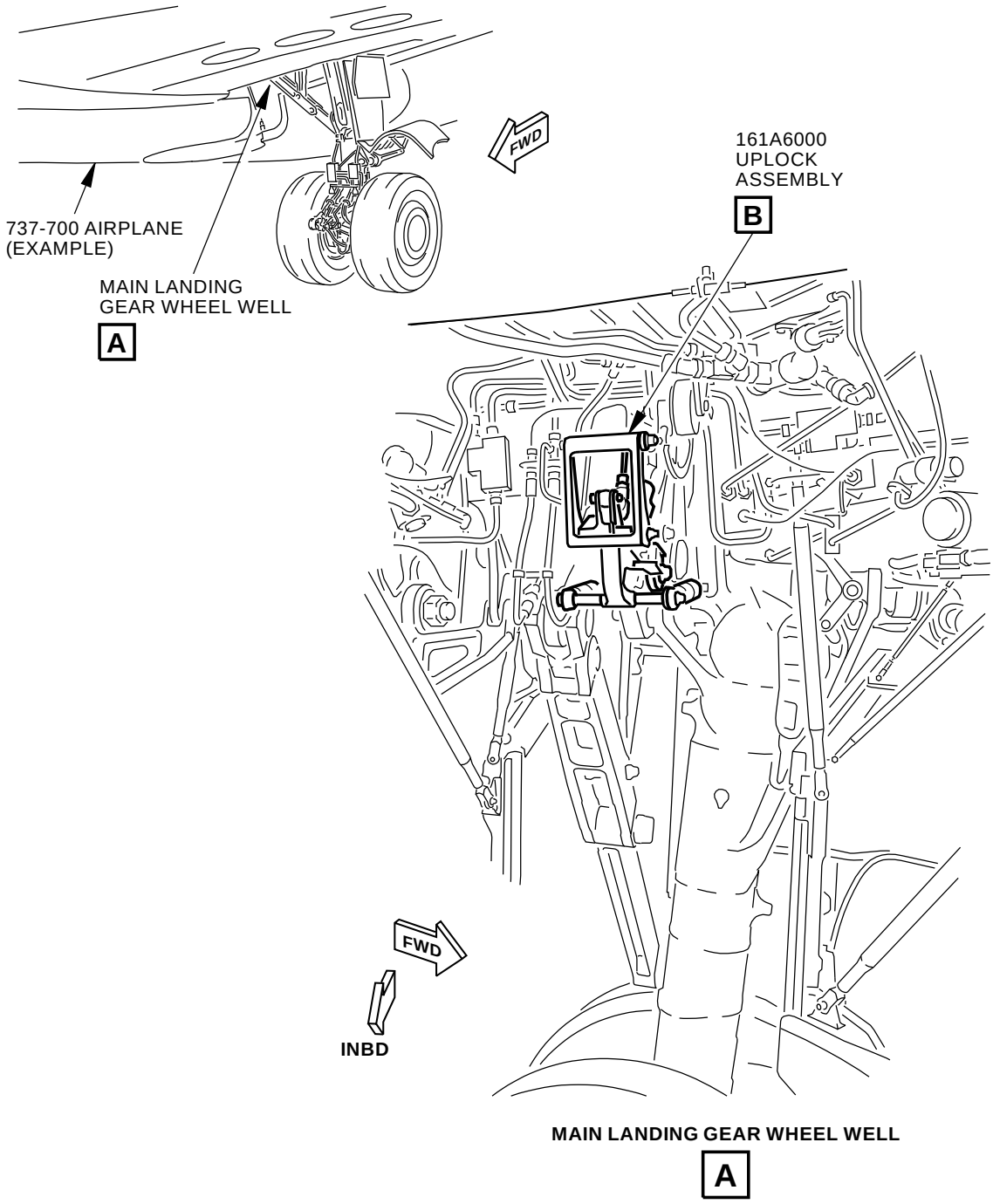

1562884 S0000289552_V2

Main/Nose Landing Gear Spring Removal/Installation Equipment
Figure 1 (Sheet 1 of 3)

BOEING PROPRIETARY - Copyright © Unpublished Work - See title page for details

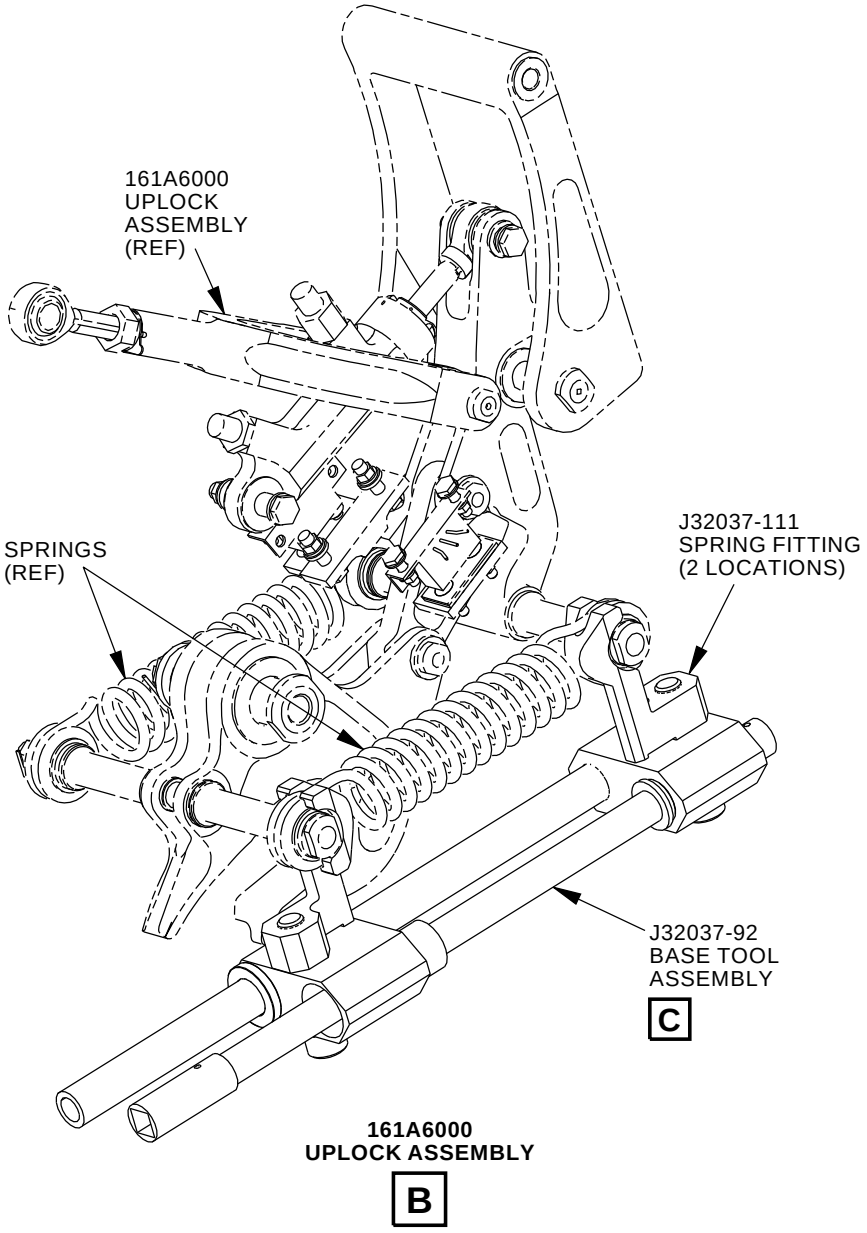

408576 S0006831900_V4

Main/Nose Landing Gear Spring Removal/Installation Equipment
Figure 1 (Sheet 2 of 3)

BOEING PROPRIETARY - Copyright © Unpublished Work - See title page for details

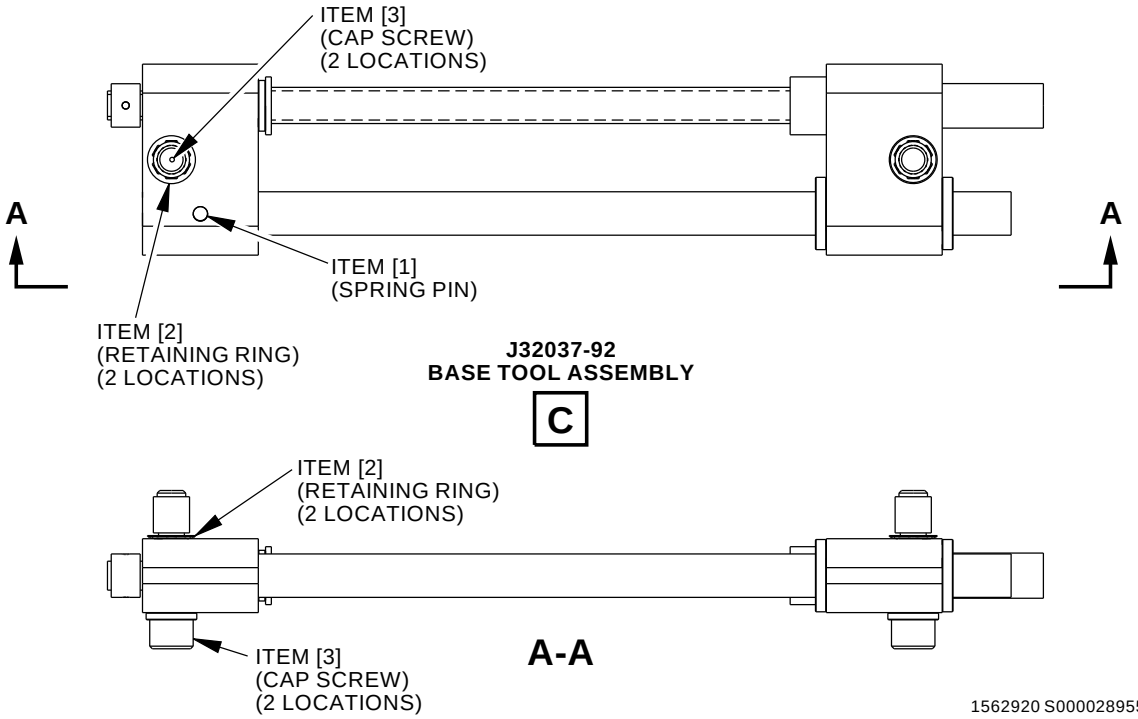

Main/Nose Landing Gear Spring Removal/Installation Equipment
Figure 1 (Sheet 3 of 3)

REPAIRABLE/REPLACEABLE PARTS			
ITEM NUMBER	PART NUMBER	NOMENCLATURE	VENDOR CODE
[1]	J32037-70	SPRING PIN	- - -
[2]	5100-28	RETAINING RING	1DRS3
[3]	J32037-104	SOCKET HEAD CAP SCREW	- - -

BOEING PROPRIETARY - Copyright © Unpublished Work - See title page for details

PART NUMBER: C32027-1, -2, -3

NAME: HOLDING FIXTURE EQUIPMENT - FUNCTIONAL TEST, LANDING GEAR CONTROL LEVER

AIRPLANE MAINTENANCE: NO

COMPONENT MAINTENANCE: YES

CMM 32-34-02

USAGE & DESCRIPTION: The C32027-1 landing gear functional test holding fixture equipment is used during component maintenance on 737-600 thru -900 airplanes.

The C32027-2 landing gear functional test holding fixture equipment is used during component maintenance on 737-100 thru -500 airplanes.

The C32027-3 landing gear functional test holding fixture equipment is used during component maintenance on 737-100 thru -900 airplanes.

C32027 is used in conjunction with a customer-furnished dial indicator and 10 to 20 lb spring scale. C32027 is used to perform a functional test of the landing gear control assembly during component maintenance.

Refer to CMM 32-34-02 and the current C32027 drawing for complete usage instructions.

The C32027-1, -2 and -3 landing gear functional test holding fixture equipment consist of:

C32027-1		
QUANTITY	**NOMENCLATURE**	**PART NUMBER**
1	BASE ASSEMBLY	C32027-26
1	PULLER ADAPTER ASSEMBLY	C32027-27
1	INSERT	C32027-4
1	TRIGGER TEST ADAPTER	C32027-5
1	SMALL V-BLOCK	C32027-6
1	STORAGE BOX	

C32027-2		
QUANTITY	**NOMENCLATURE**	**PART NUMBER**
1	BASE ASSEMBLY	C32027-26
1	PULLER ADAPTER ASSEMBLY	C32027-27
1	INSERT	C32027-4
1	TRIGGER TEST ADAPTER	C32027-5
1	LARGE V-BLOCK	C32027-7
1	STORAGE BOX	

BOEING PROPRIETARY - Copyright © Unpublished Work - See title page for details

C32027-3		
QUANTITY	NOMENCLATURE	PART NUMBER
1	BASE ASSEMBLY	C32027-26
1	PULLER ADAPTER ASSEMBLY	C32027-27
1	INSERT	C32027-4
1	TRIGGER TEST ADAPTER	C32027-5
1	SMALL V-BLOCK	C32027-6
1	LARGE V-BLOCK	C32027-7
1	STORAGE BOX	

WEIGHT: 25 lbs (11.3 kg)

DIMENSIONS: 6 x 18 x 8 inches (152 x 457 x 203 mm)

NOTE: C32027 replaces TSJ50-3309-2 for future procurement.

BOEING PROPRIETARY - Copyright © Unpublished Work - See title page for details

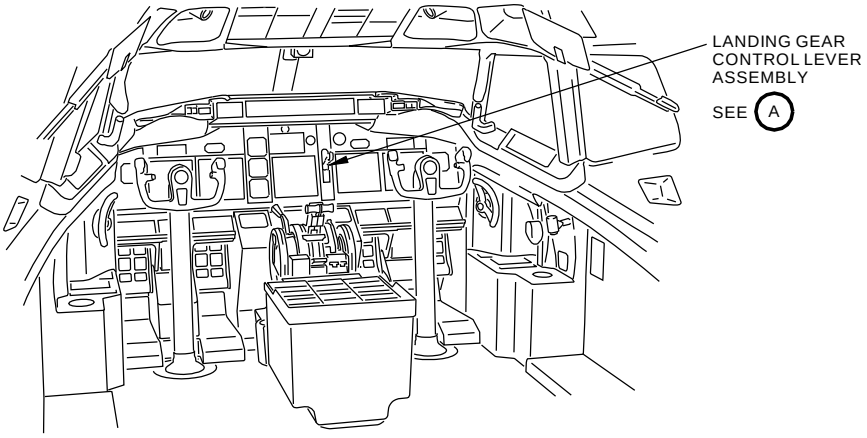

FLIGHT COMPARTMENT

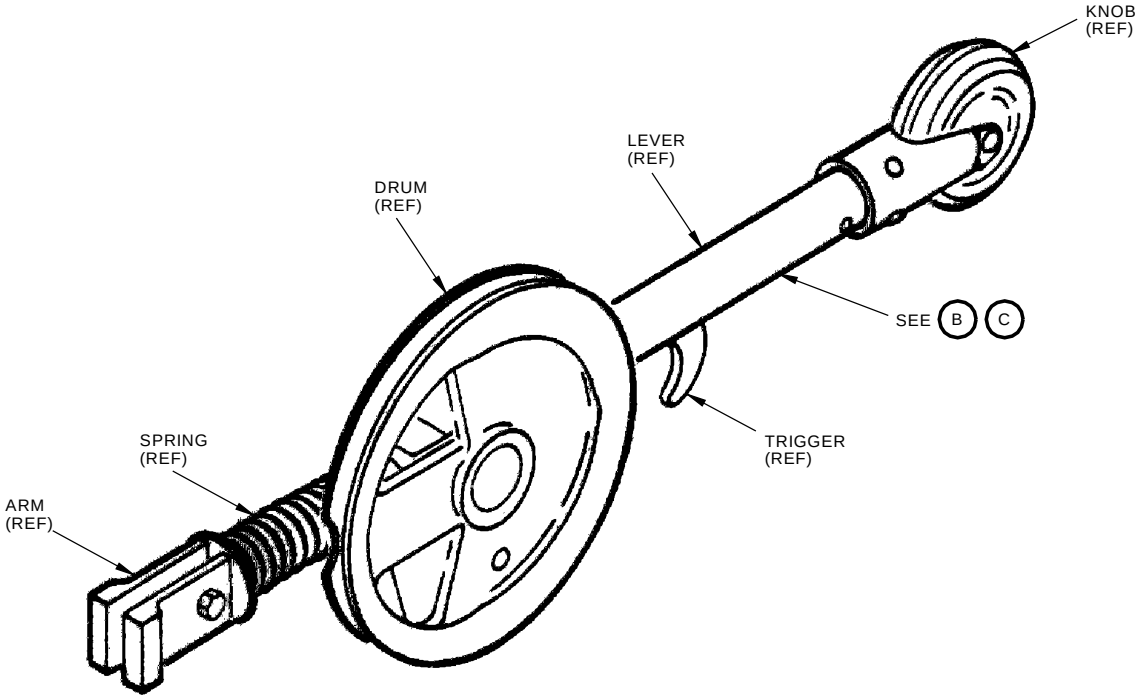

LANDING GEAR CONTROL LEVER ASSEMBLY

A

2079832 S0000430355_V1

Landing Gear Control Lever Functional Test Holding Fixture Equipment
Figure 1 (Sheet 1 of 2)

BOEING PROPRIETARY - Copyright © Unpublished Work - See title page for details

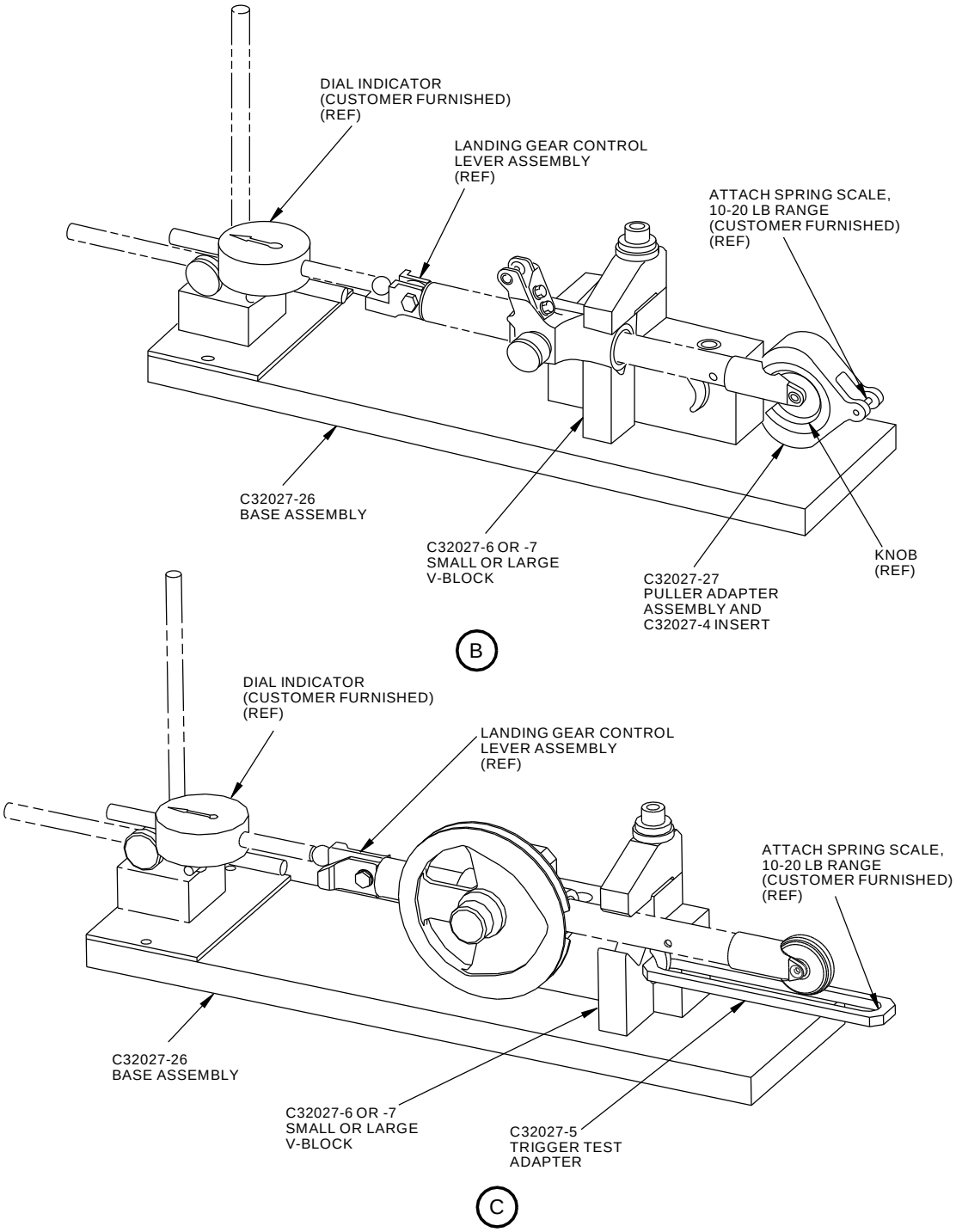

U41119 S0000194943_V2

Landing Gear Control Lever Functional Test Holding Fixture Equipment
Figure 1 (Sheet 2 of 2)

BOEING PROPRIETARY - Copyright © Unpublished Work - See title page for details

PART NUMBER: A32075-1, -9, -10

NAME: ADAPTER - ANTISKID TRANSDUCER, SPIN-UP

AIRPLANE MAINTENANCE: YES

AMM 32-42-00, AMM 32-42-11

COMPONENT MAINTENANCE: NO

USAGE & DESCRIPTION: The A32075-1 (option) adapter is used on all 737 airplanes except 737-100 thru -500 airplanes.

The A32075-9 (option) is used on all 737-200 (line number 280 and on), 737-300 thru -900, 737-7, 737-8, 737-8200 and 737-9 airplanes.

The A32075-10 (preferred) is used on all 737-200 (line number 280 and on), 737-300 thru -900, 737-7, 737-8, 737-8200 and 737-9 airplanes.

A32075 is used in conjunction with a customer-furnished drill motor to spin the main landing gear wheel speed transducer for testing of the brake antiskid system. A32075 is mounted in a drill motor and held against the 161T1221 antiskid transducer dog to turn the transducer for testing.

Refer to AMM 32-42-00, AMM 32-42-11 and the current A32075 drawing for complete usage instructions.

A32075-1, -9 and -10 consist of:

A32075-1		
QUANTITY	**NOMENCLATURE**	**PART NUMBER**
1	ADAPTER ASSEMBLY	A32075-3
1	STORAGE BOX	

A32075-9		
QUANTITY	**NOMENCLATURE**	**PART NUMBER**
1	ADAPTER ASSEMBLY	A32075-11
1	STORAGE BOX	

A32075-10		
QUANTITY	**NOMENCLATURE**	**PART NUMBER**
1	ADAPTER ASSEMBLY	A32075-12
1	STORAGE BOX	

WEIGHT: 3 lbs (1.4 kg)

DIMENSIONS: 4 x 4 x 10 inches (102 x 102 x 254 mm)

NOTE: A32075-10 replaces A32075-1 and -9 for future procurement.

BOEING PROPRIETARY - Copyright © Unpublished Work - See title page for details

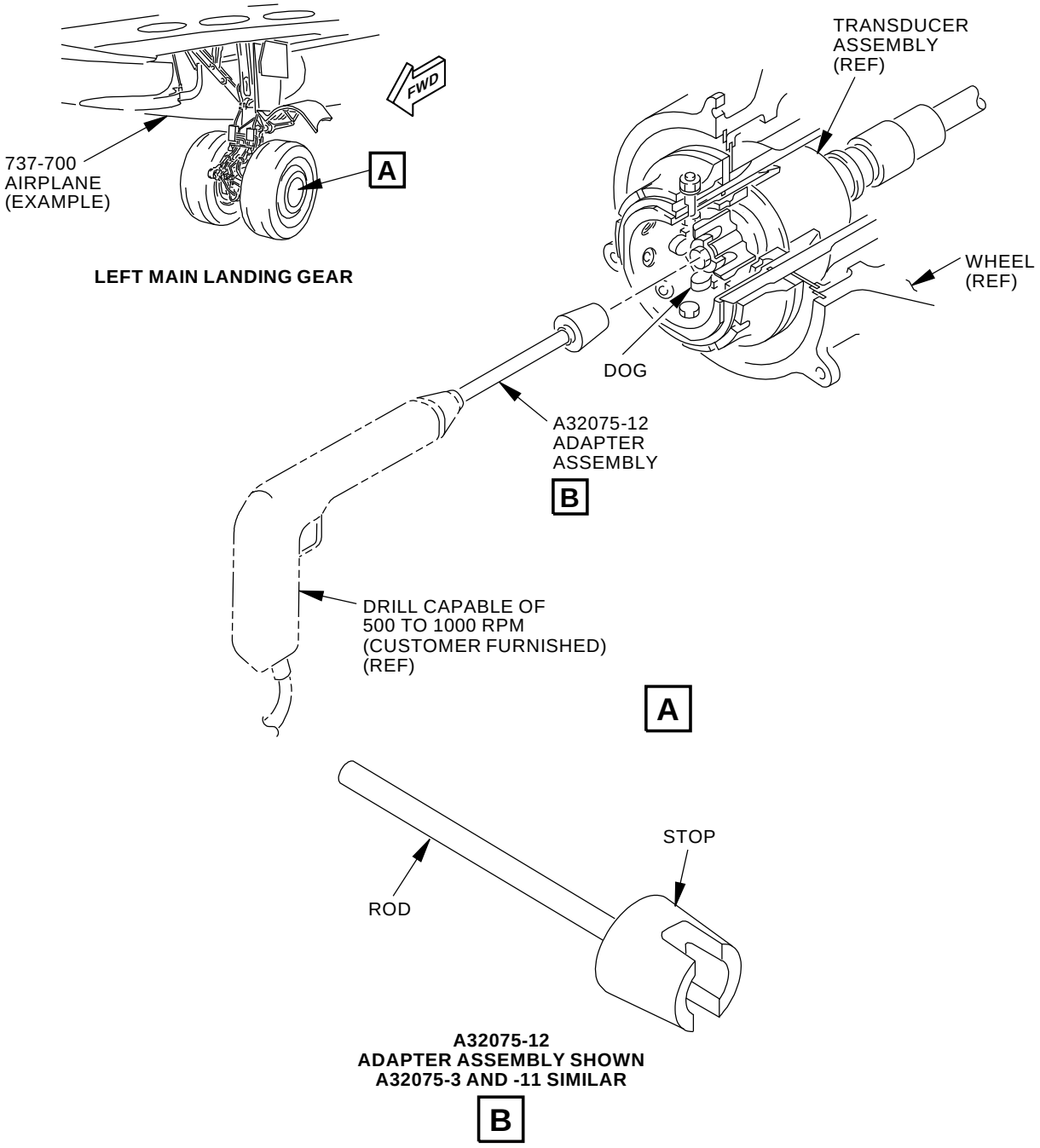

G46172 S0006831903_V4

Antiskid Transducer Spin-Up Adapter
Figure 1

BOEING PROPRIETARY - Copyright © Unpublished Work - See title page for details

PART NUMBER: C32012-12

NAME: REMOVAL/INSTALLATION EQUIPMENT - WHEEL RETENTION NUT, MAIN LANDING GEAR AND NOSE LANDING GEAR

AIRPLANE MAINTENANCE: YES

AMM 32-45-11, AMM 32-45-21

COMPONENT MAINTENANCE: NO

USAGE & DESCRIPTION: The C32012-12 removal/installation equipment is used on all 737-600 thru -900 airplanes.

C32012 is used in conjunction with a customer-furnished torque wrench for the removal or installation of the nose landing gear and main landing gear retention nuts. C32012 set includes one socket for use on the nose landing gear, one socket for use on the main landing gear and an adapter to adapt a 1/2-inch drive wrench to the 3/4-inch drive hole in each of the sockets.

Refer to AMM 32-45-11, AMM 32-45-21 and the current C32012 drawing for complete usage instructions.

C32012-12 consists of:

C32012-12		
QUANTITY	**NOMENCLATURE**	**PART NUMBER**
1	MAIN LANDING GEAR SOCKET ASSEMBLY	C32012-13
1	NOSE LANDING GEAR SOCKET	1922*[1]
1	ADAPTER	5653
1	STORAGE BOX	

*[1] C32012-3 IS OPTIONAL TO THE PREFERRED 1922

WEIGHT: 7 lbs (3 kg)

DIMENSIONS: 10 x 7 x 7 inches (254 x 178 x 178 mm)

NOTE: C32012-12 supersedes C32012-1 and C32012-8.

BOEING PROPRIETARY - Copyright © Unpublished Work - See title page for details

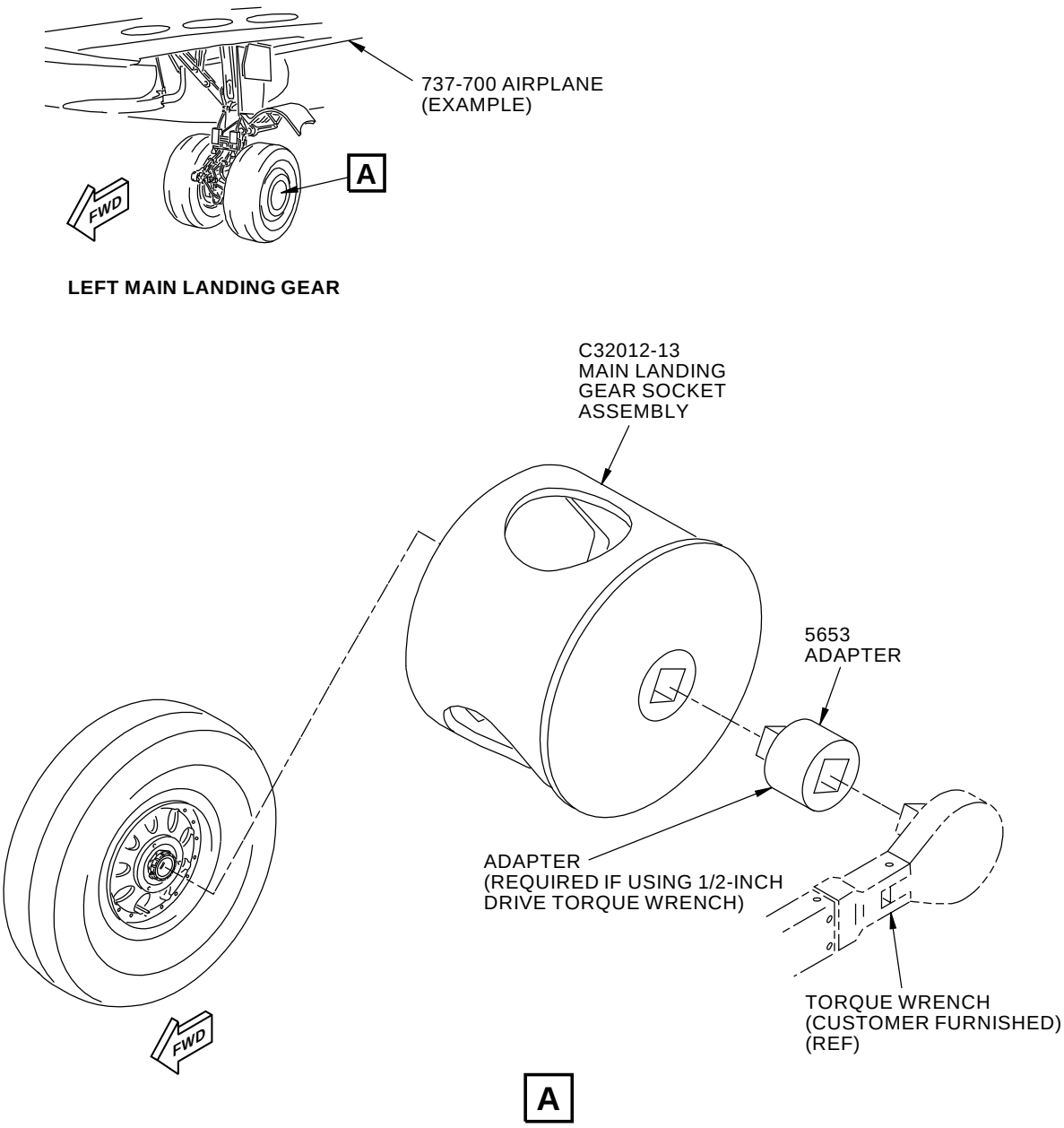

G46189 S0006831905_V5

Main Landing Gear Wheel Retention Nut Removal/Installation Equipment
Figure 1

BOEING PROPRIETARY - Copyright © Unpublished Work - See title page for details

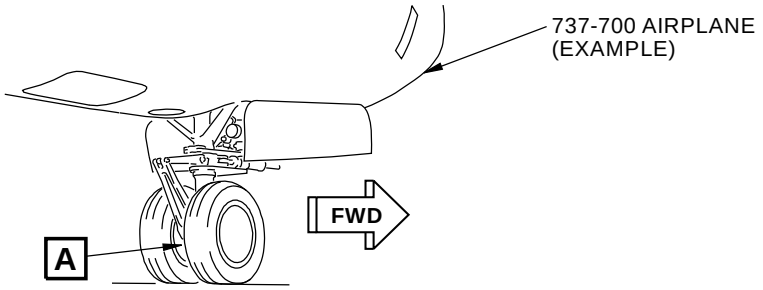

NOSE LANDING GEAR

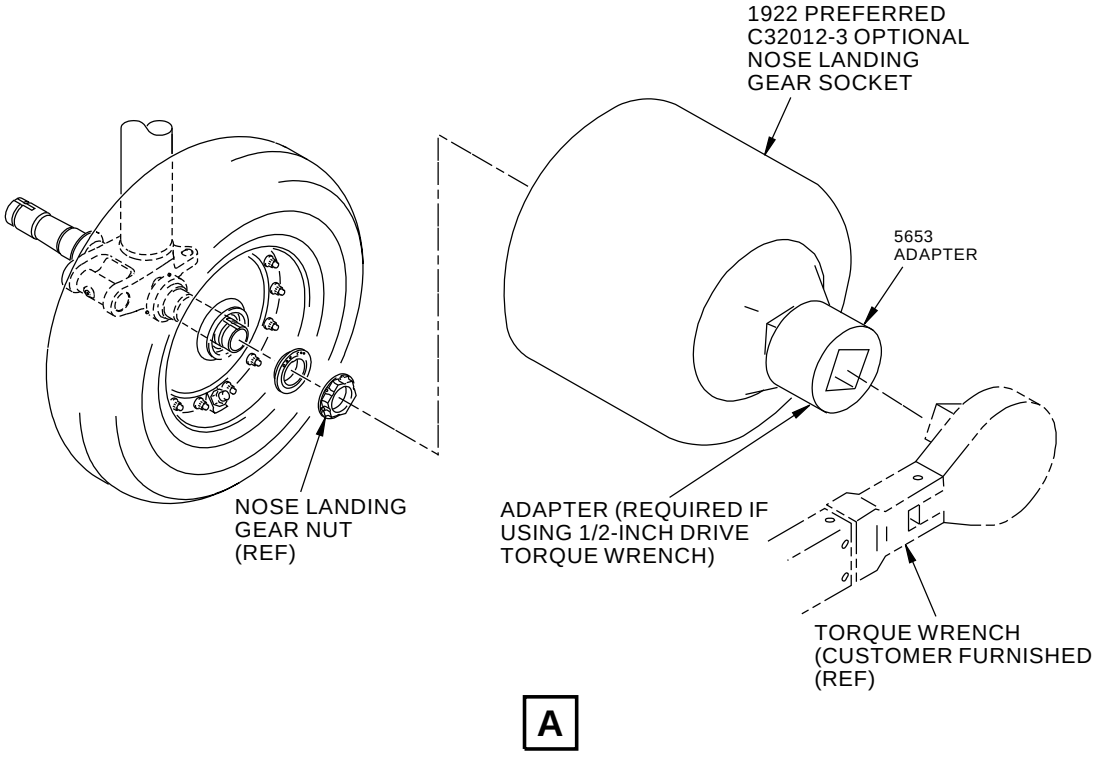

G46205 S0006831906_V4

Nose Landing Gear Wheel Retention Nut Removal/Installation Equipment
Figure 2

BOEING PROPRIETARY - Copyright © Unpublished Work - See title page for details

PART NUMBER: C32021-1

NAME: WRENCH SET - RETAINER NUT, REMOVAL/INSTALLATION, ANTI-SKID TRANSDUCER, MAIN LANDING GEAR

AIRPLANE MAINTENANCE: YES

AMM 32-42-11

COMPONENT MAINTENANCE: NO

USAGE & DESCRIPTION: The C32021-1 wrench set is used on all 737 airplanes, except 737-100 thru -500 airplanes.

C32021 is used to remove or install the main landing gear anti-skid transducer retainer nut. The C32021-7 wrench is used to hold the anti-skid transducer housing while the retainer nut is removed or installed using the C32021-4 spanner assembly and a customer-furnished 1/2-inch drive wrench.

Refer to AMM 32-42-11 and the current C32021 drawing for complete usage instructions.

C32021-1 consists of:

C32021-1		
QUANTITY	**NOMENCLATURE**	**PART NUMBER**
1	WRENCH	C32021-7
1	SPANNER ASSEMBLY	C32021-4
1	ADAPTER	C32021-8 *[1]
2	SCREW	C32021-9 *[1]
1	STORAGE BOX	

*[1] C32021-8 AND -9 ARE ONLY USED ON 757 AIRPLANES.

WEIGHT: 3 lbs (1.4 kg)

DIMENSIONS: 6 x 6 x 20 inches (152 x 152 x 508 mm)

BOEING PROPRIETARY - Copyright © Unpublished Work - See title page for details

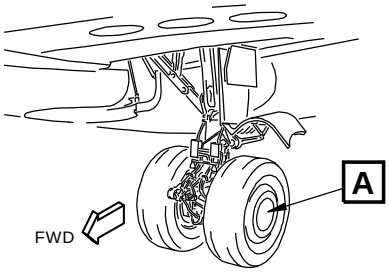

737-700 LEFT MAIN LANDING GEAR (EXAMPLE)

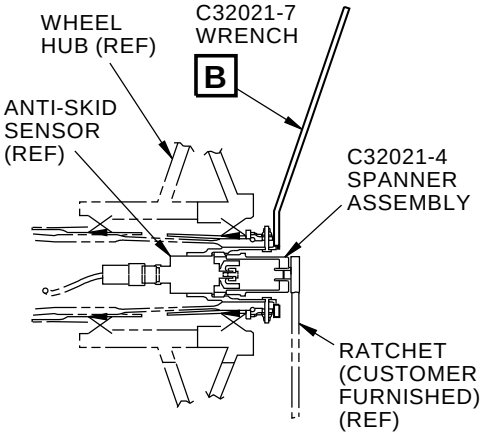

A

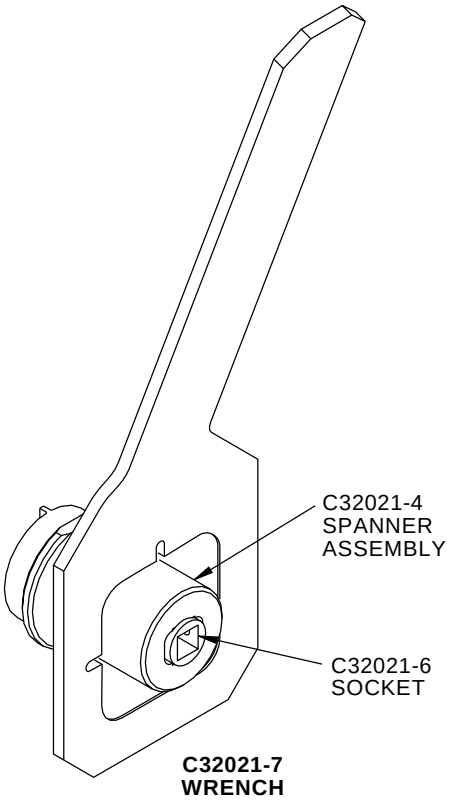

B

G74090 S0006831908_V4

Anti-Skid Transducer Retainer Nut Installation/Removal Wrench Set
Figure 1

BOEING PROPRIETARY - Copyright © Unpublished Work - See title page for details

PART NUMBER: F72977-44, -45, -46, -47, -62

NAME: GAUGE EQUIPMENT - HYDRAULIC BRAKE SYSTEM PRESSURE CHECKING

AIRPLANE MAINTENANCE: YES

AMM 32-41-00, AMM 32-41-93 and AMM 32-42-00

COMPONENT MAINTENANCE: NO

USAGE & DESCRIPTION: The F72977-44 hydraulic brake system pressure checking gauge equipment is used on 737-100/-200 airplanes only. By following rework instructions on the F72977 drawing, F72977-44 may be reworked to become F72977-45 for use on all 737 airplanes.

F72977-45 (option), -46 (option), -47 (option) or -62 (preferred) gauge equipment is used on all 737 models. F72977-44, -45, -46, -47 and -62 are all similar in appearance and function.

F72977 is used on the main braking system to check brake pressure after any maintenance where a brake line is opened or any component in the braking system is replaced.

Refer to the current F72977 drawing, AMM 32-41-00, AMM 32-41-93 and AMM 32-42-00 for complete usage instructions.

F72977-44, -45, -46, -47 and -62 consist of:

F72977-44		
QUANTITY	**NOMENCLATURE**	**PART NUMBER**
4	ADAPTER ASSEMBLY	F72977-4
4	HOSE ASSEMBLY	F72977-56
1	STORAGE BOX	

F72977-45		
QUANTITY	**NOMENCLATURE**	**PART NUMBER**
4	ADAPTER ASSEMBLY	F72977-4
4	ADAPTER EXTENSION ASSEMBLY	F72977-26
4	HOSE ASSEMBLY	F72977-56
1	STORAGE BOX	

F72977-46		
QUANTITY	**NOMENCLATURE**	**PART NUMBER**
4	ADAPTER ASSEMBLY	F72977-4
4	ADAPTER EXTENSION ASSEMBLY	F72977-26
4	HOSE ASSEMBLY	F72977-56
1	STORAGE BOX	

BOEING PROPRIETARY - Copyright © Unpublished Work - See title page for details

F72977-47		
QUANTITY	NOMENCLATURE	PART NUMBER
4	ADAPTER ASSEMBLY	F72977-51
4	ADAPTER EXTENSION ASSEMBLY	F72977-26
4	HOSE ASSEMBLY	F72977-56
1	STORAGE BOX	

F72977-62		
QUANTITY	NOMENCLATURE	PART NUMBER
4	ADAPTER ASSEMBLY	F72977-64
4	HOSE ASSEMBLY	F72977-56
1	STORAGE BOX	

WEIGHT: 20 lbs (9 kg)

DIMENSIONS: 14 x 14 x 12 inches (356 x 356 x 305 mm)

NOTE: F72977-62 replaces F72977-45, -46, and -47 for future procurement.
C32051 replaces F72977 for future procurement.
F72977-46 supersedes F72977-39.
F72977-45 supersedes F72977-19.
F72977-44 supersedes F72977-1.

BOEING PROPRIETARY - Copyright © Unpublished Work - See title page for details

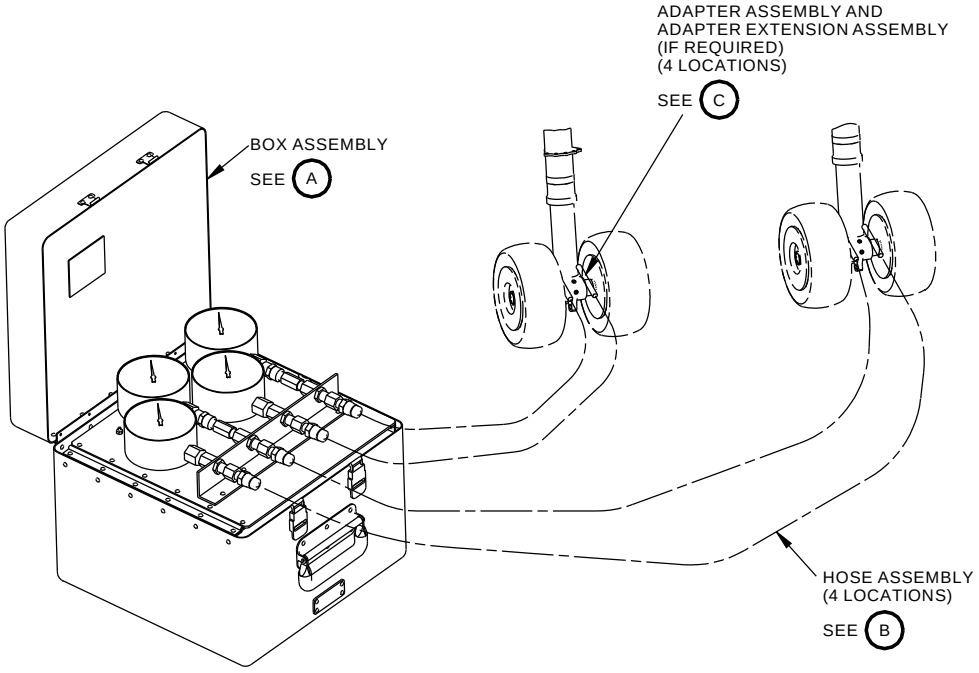

G79313 S0006831910_V4

Hydraulic Brake System Pressure Checking Gauge
Figure 1 (Sheet 1 of 2)

BOEING PROPRIETARY - Copyright © Unpublished Work - See title page for details

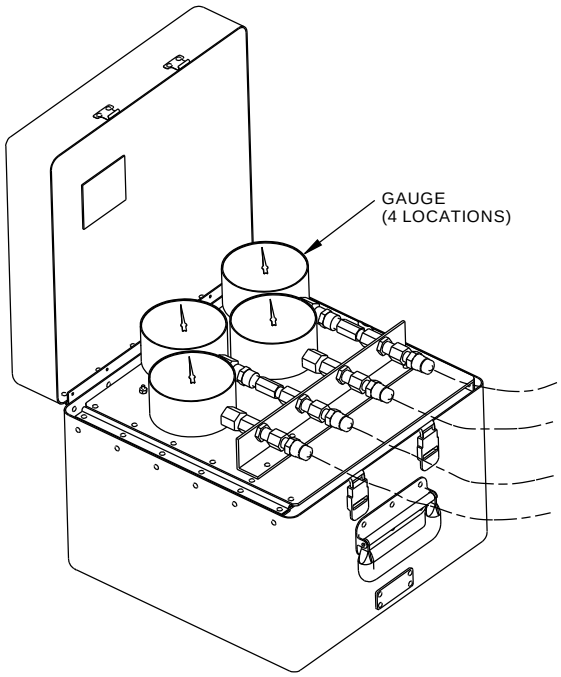

F72977-63
BOX ASSEMBLY

A

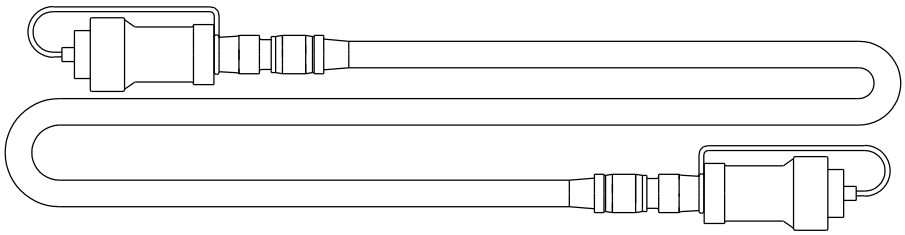

F72977-56
HOSE ASSEMBLY

B

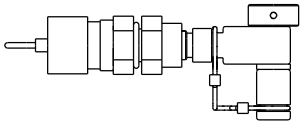

F72977-64
ADAPTER ASSEMBLY

C

2079712 S0000430861_V2

Hydraulic Brake System Pressure Checking Gauge
Figure 1 (Sheet 2 of 2)

BOEING PROPRIETARY - Copyright © Unpublished Work - See title page for details

PART NUMBER: C32022-2, -15, -17, -20, -23, -32, -35

NAME: THREAD PROTECTOR EQUIPMENT - MAIN LANDING GEAR/NOSE LANDING GEAR AXLE

AIRPLANE MAINTENANCE: YES

AMM 32-41-41, AMM 32-45-11 and AMM 32-45-21

COMPONENT MAINTENANCE: YES

CMM 32-11-12, CMM 32-11-16, CMM 32-11-17, CMM 32-21-38, CMM 32-21-48, CMM 32-26-01, CMM 32-26-11

USAGE & DESCRIPTION: The C32022-2 (option to -20) or C32022-20 (preferred over -2) nose landing gear axle thread protector equipment is used on all 737 airplanes, except 737-100 thru -500 airplanes.

The C32022-15 (option to -23), C32022-17 (option to -23) or C32022-23 (preferred over -15 and -17) main landing gear axle thread protector equipment is used on all 737 airplanes, except 737-100 thru -500 airplanes.

The C32022-32 main landing gear axle thread protector equipment is used on 737-600 thru -900 airplanes where main gear axles have been repaired to 3.750-12 UMJ-3A (1/8 undersize).

The C32022-35 nose landing gear axle thread protector equipment is used on all 737 airplanes, except 737-100 thru -500 airplanes, where main gear axles have been repaired to 2.000-16 UNJ-3A (1/16 undersize).

C32022-2 and -20 are used to protect the nose landing gear axle treads.

C32022-15, -17 and -23 are used to protect the main landing gear axle threads and the main landing gear anti-skid transducer assembly during wheel and brake installation and removal.

C32022-32 is used on main landing gear to protect threads that have been repaired to 3.750-12 UMJ-3A (1/8 undersize). C32022-32 is used in conjunction with C32022-23 to protect threads for brake removal and installation.

C32022-35 is used to protect the nose landing gear axle threads when threads are repaired to 2.000-16 UNJ-3A (1/16 undersize).

Refer to AMM 32-41-41, AMM 32-45-11, AMM 32-45-21, CMM 32-11-12, CMM 32-11-16, CMM 32-11-17, CMM 32-21-38, CMM 32-21-48, CMM 32-26-01, CMM 32-26-11 and the current C32022 drawing for complete usage instructions.

C32022-2, -15, -17, -20, -23, -32 and -35 consist of:

C32022-2		
QUANTITY	**NOMENCLATURE**	**PART NUMBER**
1	NOSE LANDING GEAR AXLE THREAD PROTECTOR	C32022-5
1	STORAGE BOX	

BOEING PROPRIETARY - Copyright © Unpublished Work - See title page for details

C32022-15		
QUANTITY	NOMENCLATURE	PART NUMBER
1	MAIN LANDING GEAR AXLE PROTECTOR ASSEMBLY	C32022-3
1	MAIN LANDING GEAR THREAD PROTECTOR	C32022-16
1	STORAGE BOX	

C32022-17		
QUANTITY	NOMENCLATURE	PART NUMBER
1	MAIN LANDING GEAR AXLE PROTECTOR ASSEMBLY	C32022-3
1	MAIN LANDING GEAR THREAD PROTECTOR	C32022-18
1	STORAGE BOX	

C32022-20		
QUANTITY	NOMENCLATURE	PART NUMBER
1	NOSE LANDING GEAR AXLE THREAD PROTECTOR	C32022-21
1	STORAGE BOX	

C32022-23		
QUANTITY	NOMENCLATURE	PART NUMBER
1	MAIN LANDING GEAR AXLE PROTECTOR ASSEMBLY	C32022-24
1	MAIN LANDING GEAR THREAD PROTECTOR	C32022-26
1	STORAGE BOX	

C32022-32		
QUANTITY	NOMENCLATURE	PART NUMBER
1	MAIN LANDING GEAR THREAD PROTECTOR	C32022-33
1	STORAGE BOX	

C32022-35		
QUANTITY	NOMENCLATURE	PART NUMBER
1	NOSE LANDING GEAR AXLE THREAD PROTECTOR	C32022-36
1	STORAGE BOX	

WEIGHT: C32022-15, -17 - 9 lbs (4.1 kg)
C32022-2, -20, -35 - 1 lb (0.45 kg)
C32022-23 - 12 lbs (5 kg)
C32022-32 - 6 lbs (3 kg)

BOEING PROPRIETARY - Copyright © Unpublished Work - See title page for details

DIMENSIONS: C32022-15, -17 - 6 x 6 x 13 inches (152 x 152 x 330 mm)
C32022-2, -20, -35 - 2 x 2 x 2 inches (51 x 51 x 51 mm)
C32022-23 - 6 x 6 x 16 inches (152 x 152 x 406 mm)
C32022-32 - 4 x 4 x 6 inches (102 x 102 x 152 mm)

NOTE: C32022-23 replaces C32022-17 and -15 for future procurement.
C32022-20 replaces C32022-2 for future procurement.
C32022-15 supersedes C32022-1.

BOEING PROPRIETARY - Copyright © Unpublished Work - See title page for details

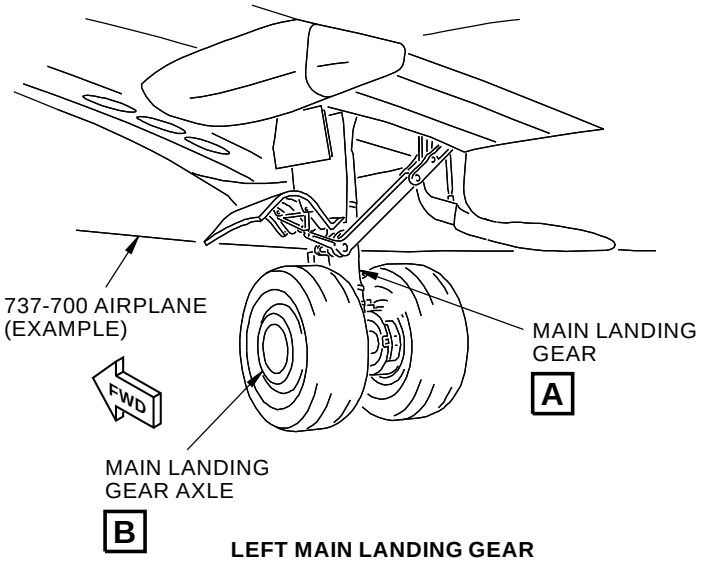

LEFT MAIN LANDING GEAR

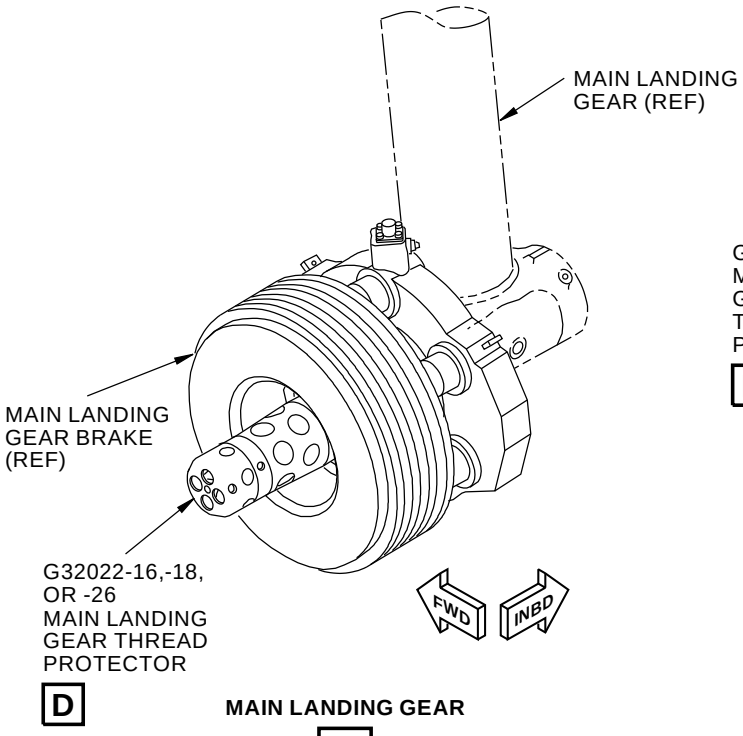

MAIN LANDING GEAR

A

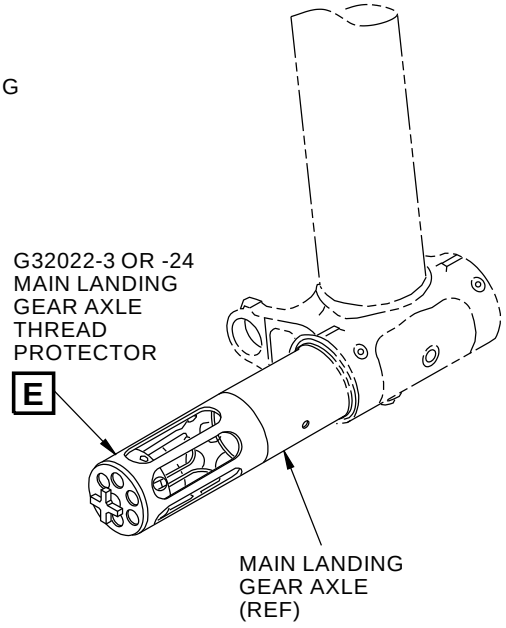

MAIN LANDING GEAR AXLE

B

G81471 S0006831911_V5

Main and Nose Landing Gear Axle Thread Protector Equipment
Figure 1 (Sheet 1 of 3)

BOEING PROPRIETARY - Copyright © Unpublished Work - See title page for details

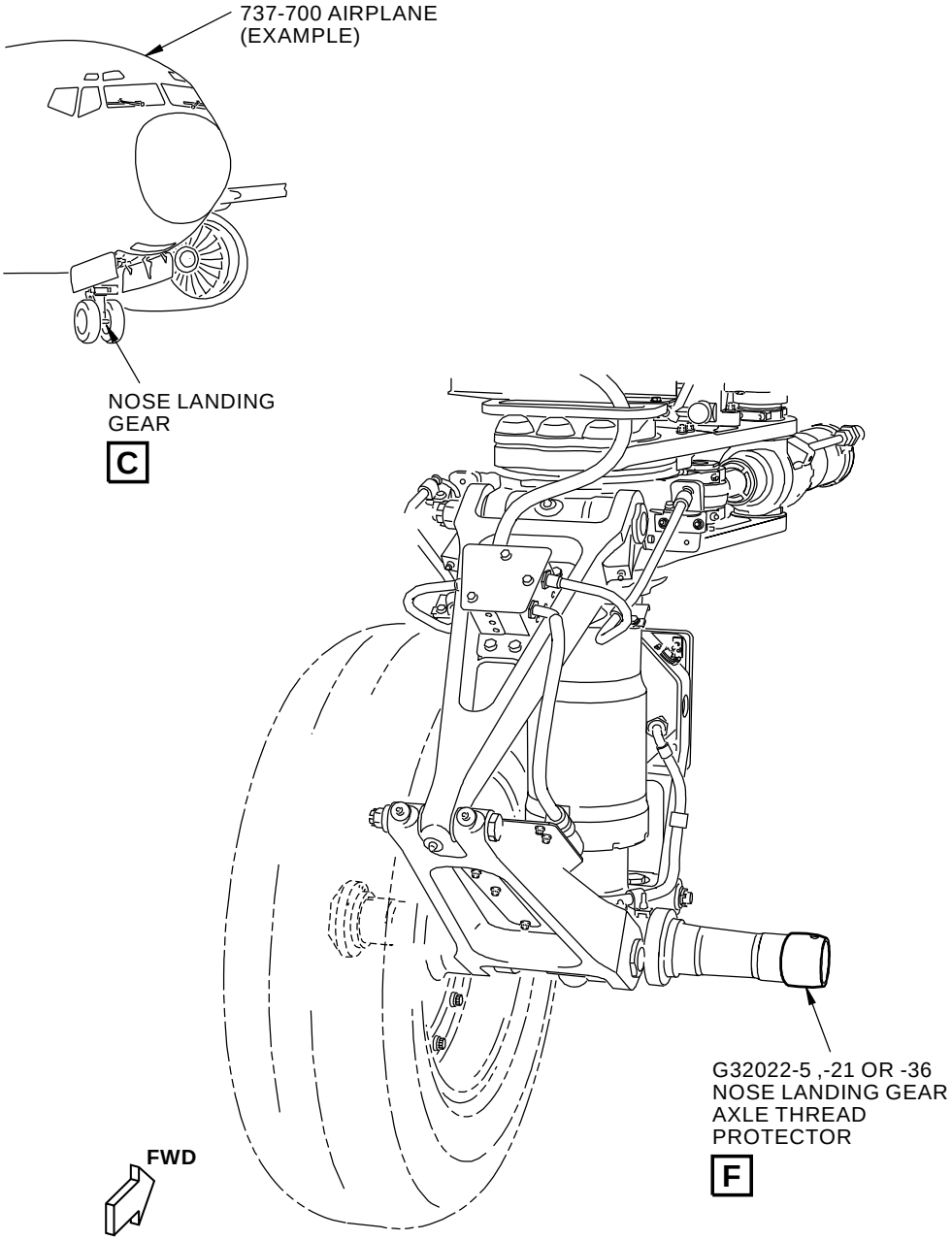

NOSE LANDING GEAR

C

G81456 S0006831912_V4

Main and Nose Landing Gear Axle Thread Protector Equipment
Figure 1 (Sheet 2 of 3)

BOEING PROPRIETARY - Copyright © Unpublished Work - See title page for details

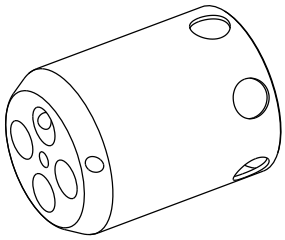

C32022-26 MAIN LANDING GEAR
THREAD PROTECTOR SHOWN
C32022-16 AND -18 SIMILAR

D

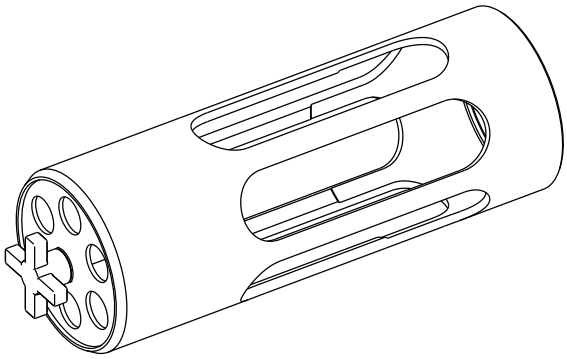

C32022-24 MAIN LANDING GEAR AXLE
THREAD PROTECTOR SHOWN
C32022-3 SIMILAR

E

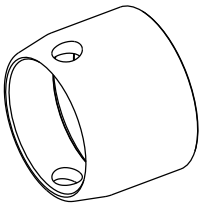

C32022-21 NOSE LANDING GEAR
THREAD PROTECTOR SHOWN
C32022-5 AND -36 SIMILAR

F

2426627 S0000561347_V1

Main and Nose Landing Gear Axle Thread Protector Equipment
Figure 1 (Sheet 3 of 3)

BOEING PROPRIETARY - Copyright © Unpublished Work - See title page for details

PART NUMBER: F80168-1, -2, -3

NAME: SOCKET - AXLE NUT

AIRPLANE MAINTENANCE: YES

AMM 32-45-21

COMPONENT MAINTENANCE: NO

USAGE & DESCRIPTION: The F80168-1 socket is used on all 737 nose landing gear axle nuts.

The F80168-2 socket is used on 737-100 and -200 main landing gear axle nuts.

The F80168-3 socket is used on 737-100 thru -500 main landing gear axle nuts. For 737-600 thru -900 airplanes, see C32012 removal/installation equipment for the main landing gear axle nut socket assembly.

F80168-1 is used for the removal or installation of a nose landing gear retention nut. F80168-2 and -3 are used for the removal or installation of a main landing gear retention nut.

Refer AMM 32-11-00, AMM 32-43-11, AMM 32-45-11, AMM 32-45-21 and to the current F80168 drawing for complete usage instructions.

F80168-1 is optional to the preferred tool part number 1922 of OTC, a Division of SPX Corporation, 655 Eisenhower Drive, Owatonna, MN 55060. F80168-1 consists of a single F80168-1 nose gear socket.

WEIGHT: 0.5 lbs (0.2 kg)

DIMENSIONS: 4 x 4 x 1.5 inches (102 x 102 x 38 mm)

NOTE: F80168-1 is optional to the preferred tool part number 1922 of OTC.

BOEING PROPRIETARY - Copyright © Unpublished Work - See title page for details

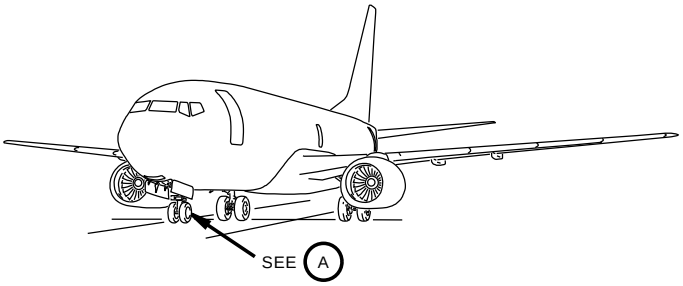

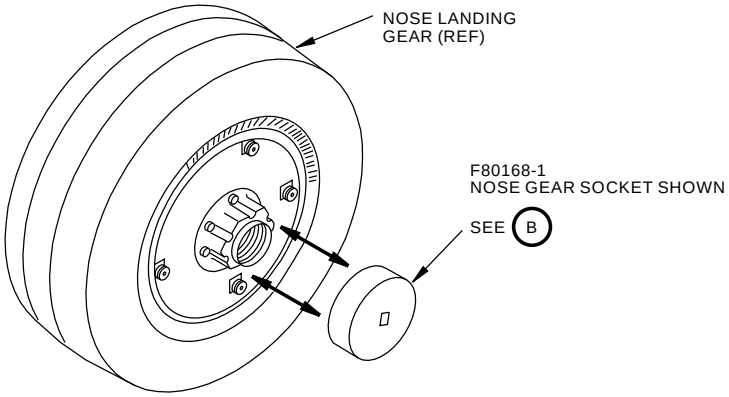

A

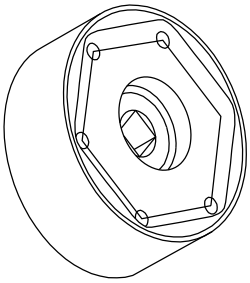

F80168-1
NOSE GEAR SOCKET SHOWN
F80168-2 AND -3
MAIN GEAR SOCKETS SIMILAR

B

H74236 S0006831913_V3

Axle Nut Socket
Figure 1

BOEING PROPRIETARY - Copyright © Unpublished Work - See title page for details

PART NUMBER: C32051-1

NAME: TEST EQUIPMENT - HYDRAULIC BRAKE SYSTEM PRESSURE CHECKING

AIRPLANE MAINTENANCE: YES

AMM 32-41-00, AMM 32-41-93, AMM 32-42-00

COMPONENT MAINTENANCE: NO

USAGE & DESCRIPTION: The C32051-1 hydraulic brake system test equipment is used on all 737 airplanes.

C32051 is used to check hydraulic brake pressure during functional checks of the main landing gear brakes, antiskid or auto brake systems.

Refer to the current C32051 drawing, AMM 32-41-00, AMM 32-41-93 and AMM 32-42-00 for complete usage instructions.

C32051-1 test equipment consists of:

C32051-1		
QUANTITY	**NOMENCLATURE**	**PART NUMBER**
1	TEST BOX ASSEMBLY	C32051-2
1	CABLE ASSEMBLY	C32051-3
1	RED TRANSDUCER ADAPTER ASSEMBLY	C32051-5
1	BLUE TRANSDUCER ADAPTER ASSEMBLY	C32051-6
1	YELLOW TRANSDUCER ADAPTER ASSEMBLY	C32051-7
1	GREEN TRANSDUCER ADAPTER ASSEMBLY	C32051-8
1	POWER CORD ASSEMBLY	C32051-9
1	1/4 INCH HYDRAULIC TUBE ADAPTER ASSEMBLY	C32051-10
1	3/8 INCH HYDRAULIC TUBE ADAPTER ASSEMBLY	C32051-11
1	1/2 INCH HYDRAULIC TUBE ADAPTER ASSEMBLY	C32051-12
1	5/8 INCH HYDRAULIC TUBE ADAPTER ASSEMBLY	C32051-13
1	3/4 INCH HYDRAULIC TUBE ADAPTER ASSEMBLY	C32051-14
1	1 INCH HYDRAULIC TUBE ADAPTER ASSEMBLY	C32051-15
1	BLEEDER VALVE ADAPTER ASSEMBLY	C32051-16
1	COVER ASSEMBLY	C32051-17
1	PLACARD ASSEMBLY	C32051-52
1	STORAGE CASE	

WEIGHT: 75 lbs (34 kg)

DIMENSIONS: 27 x 28 x 16 inches (686 x 711 x 406 mm)

NOTE: C32051 replaces F72977 for future procurement.

BOEING PROPRIETARY - Copyright © Unpublished Work - See title page for details

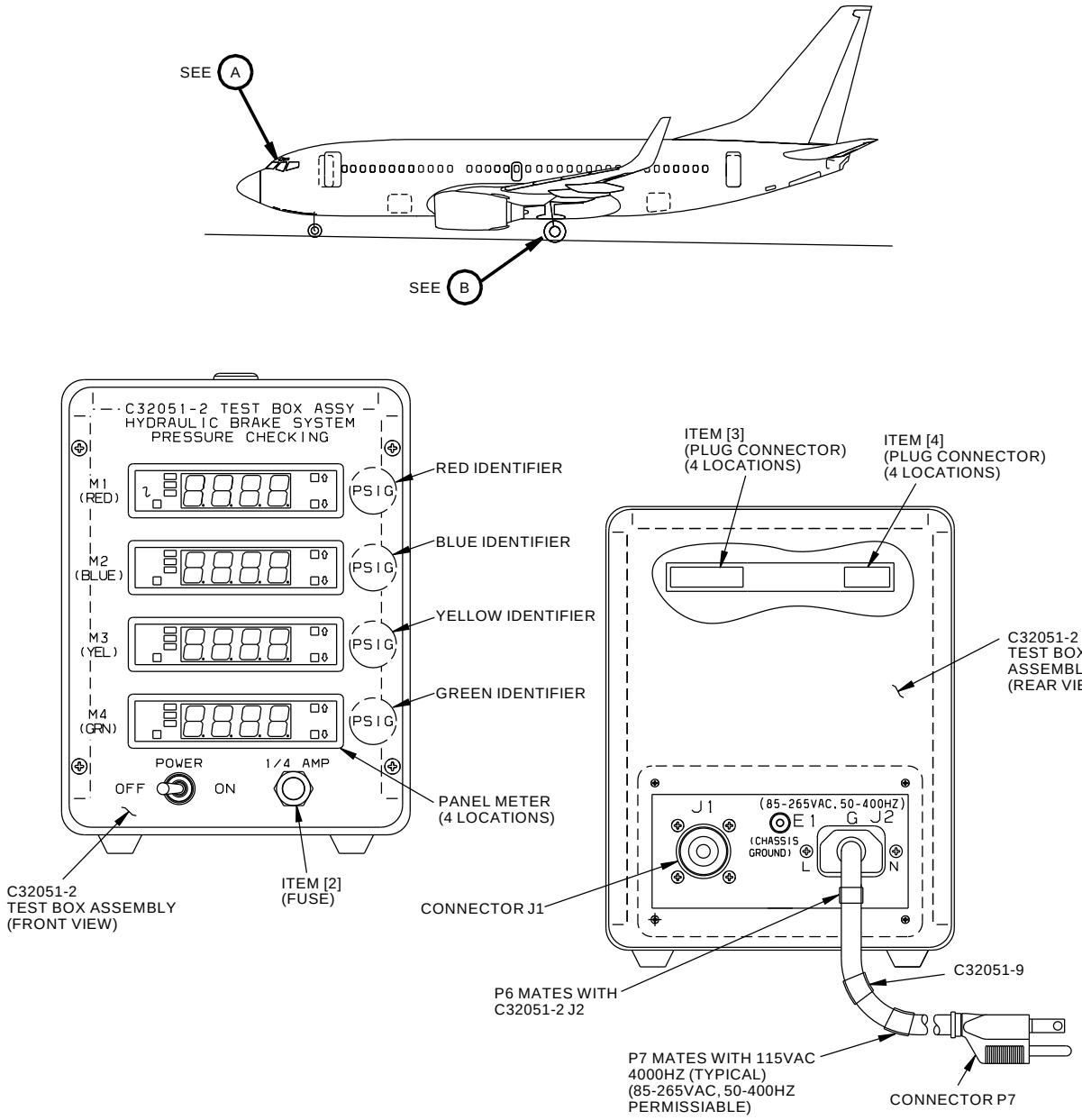

C32051-2
TEST BOX ASSEMBLY

A

1868125 S0000336717_V2

Test Equipment - Hydraulic Brake System Pressure Checking
Figure 1 (Sheet 1 of 4)

BOEING PROPRIETARY - Copyright © Unpublished Work - See title page for details

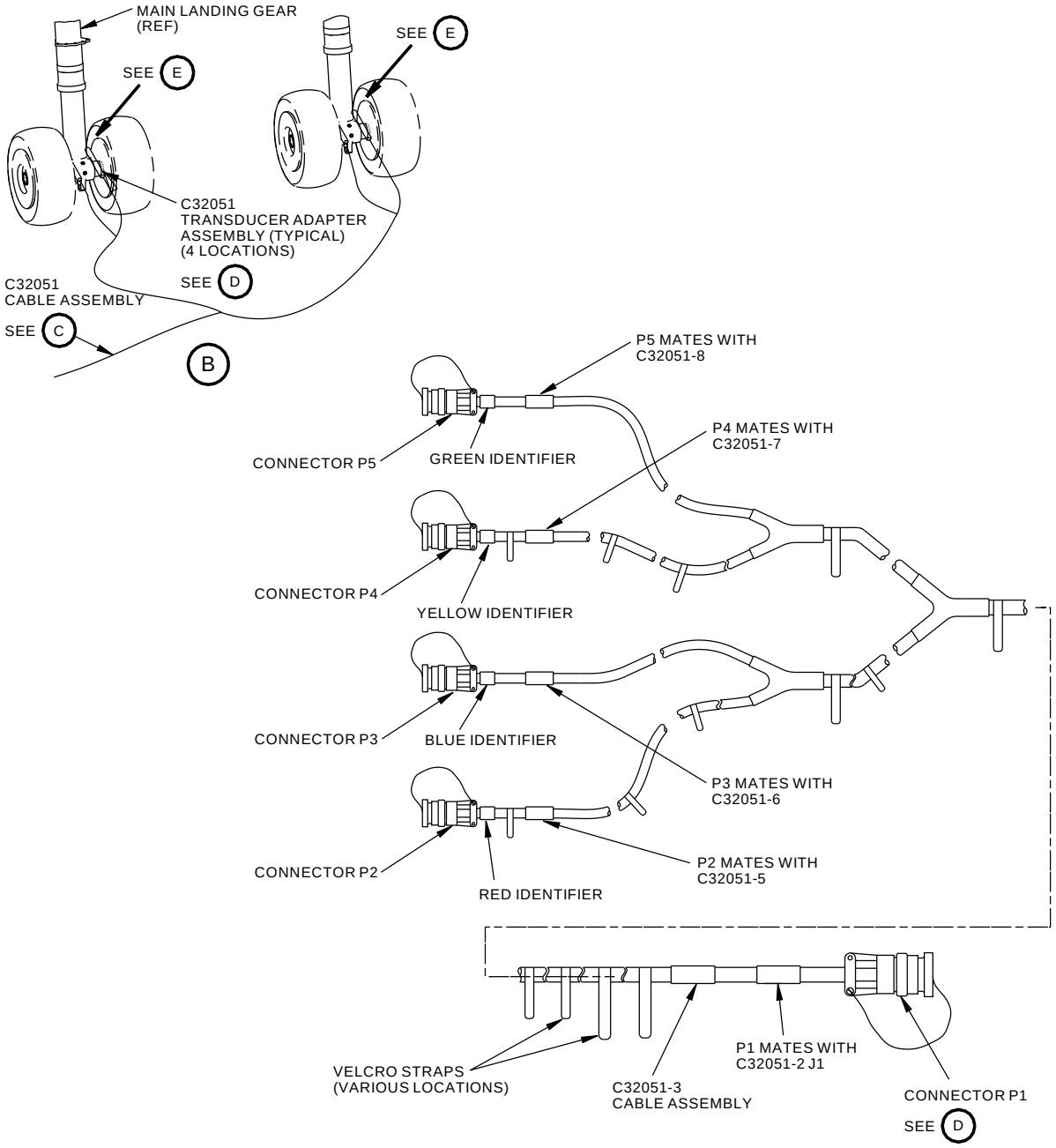

1934442 S0000364613_V1

Test Equipment - Hydraulic Brake System Pressure Checking
Figure 1 (Sheet 2 of 4)

BOEING PROPRIETARY - Copyright © Unpublished Work - See title page for details

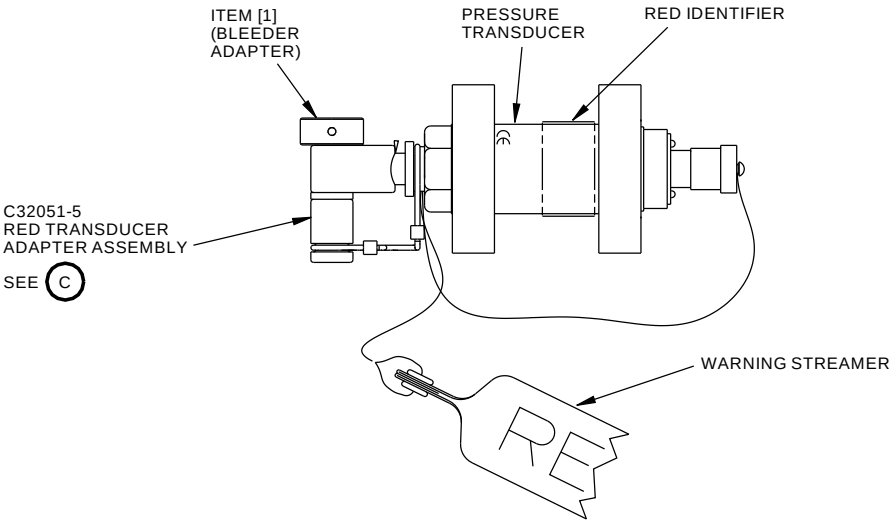

C32051-5 RED TRANSDUCER ADAPTER ASSEMBLY SHOWN
C32051-6,-7,-8 SIMILAR

D

1868133 S0000336718_V2

Test Equipment - Hydraulic Brake System Pressure Checking
Figure 1 (Sheet 3 of 4)

BOEING PROPRIETARY - Copyright © Unpublished Work - See title page for details

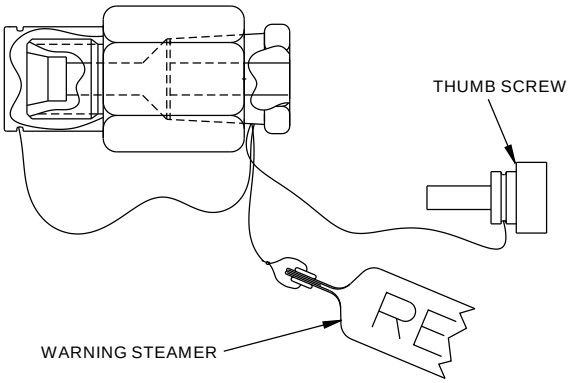

C32051-10
1/4-INCH HYDRAULIC TUBE ADAPTER ASSEMBLY SHOWN
C32051-11,-12,-13,-14,-15 SIMILAR

E

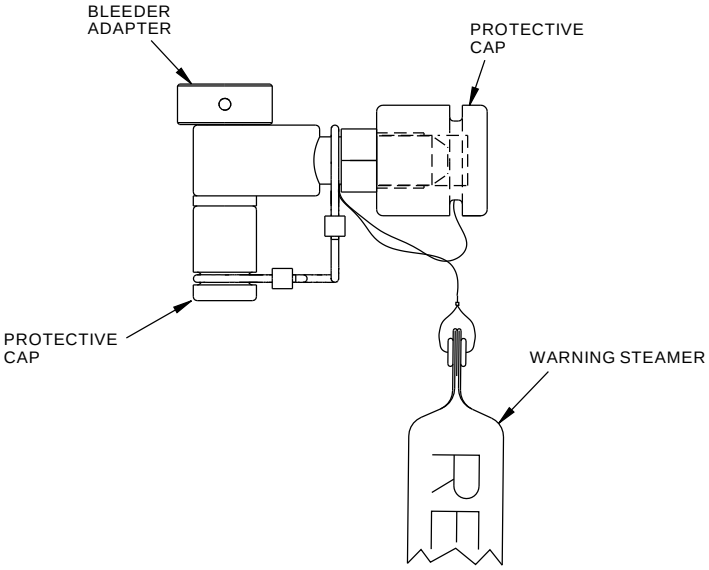

C32051-16
BLEEDER VALVE ADAPTER ASSEMBLY

E

1868147 S0000336719_V3

Test Equipment - Hydraulic Brake System Pressure Checking
Figure 1 (Sheet 4 of 4)

BOEING PROPRIETARY - Copyright © Unpublished Work - See title page for details

REPAIRABLE/REPLACEABLE PARTS			
ITEM NO.	PART NO.	NOMENCLATURE	VENDOR CODE
[1]	C32051-30	BLEEDER ADAPTER	- - -
[2]	312.250	FUSE	- - -
[3]	93-PLUG3P-DR	PLUG CONNECTOR	- - -
[4]	93-PLUG2P-DP	PLUG CONNECTOR	- - -

BOEING PROPRIETARY - Copyright © Unpublished Work - See title page for details

PART NUMBER: J32001-63, -64, -67, -68

NAME: MEASURING EQUIPMENT - BRAKE PEDAL

AIRPLANE MAINTENANCE: YES

AMM 32-41-00

COMPONENT MAINTENANCE: NO

USAGE & DESCRIPTION: The J32001-63, -64, -67 (preferred) or -68 (preferred) is used on all 737-600 thru -900 airplanes.

J32001-63, -64, -67 or -68 is used to measure the load applied and angle of travel of the airplane's brake pedals during the hydraulic brake system test.

Both J32001-63 and -64 require a customer-furnished voltmeter and appropriate calculations to obtain the brake pedal loading and angle of travel. J32001-63 and -64 allow for measurement of one brake pedal loading and angle of travel at a time.

J32001-67 incorporates a digital readout of one brake pedal loading and angle of travel at a time, without using a customer-furnished voltmeter and calculations.

J32001-68 incorporates a digital readout of two brake pedal loads and angles of travel at once, without using a customer-furnished voltmeter and calculations.

Refer to AMM 32-41-00 and the current J32001 drawing for complete usage instructions.

J32001-63, -64, -67 and -68 consist of:

J32001-63		
QUANTITY	**NOMENCLATURE**	**PART NUMBER**
1	TOOL ASSEMBLY	J32001-61
1	TEST BOX ASSEMBLY	J32001-33
1	CABLE ASSEMBLY	J32001-4
1	STORAGE BOX	

J32001-64		
QUANTITY	**NOMENCLATURE**	**PART NUMBER**
1	TOOL ASSEMBLY	J32001-51
1	TEST BOX ASSEMBLY	J32001-50
1	STORAGE BOX	

J32001-67		
QUANTITY	**NOMENCLATURE**	**PART NUMBER**
1	TOOL ASSEMBLY	J32001-69

BOEING PROPRIETARY - Copyright © Unpublished Work - See title page for details

(Continued)

J32001-67		
QUANTITY	NOMENCLATURE	PART NUMBER
1	TEST STAND ASSEMBLY	J32001-72
1	POWER CORD ASSEMBLY	J32001-74
1	STORAGE BOX	

J32001-68		
QUANTITY	NOMENCLATURE	PART NUMBER
1	TOOL ASSEMBLY	J32001-70
1	TOOL ASSEMBLY	J32001-71
1	TEST STAND ASSEMBLY	J32001-73
1	POWER CORD ASSEMBLY	J32001-74
1	STORAGE BOX	

WEIGHT: J32001-63 and J32001-64 - 10 lbs (4.5 kg)
J32001-67 - 15 lbs (7 kg)
J32001-68 - 25 lbs (11 kg)

DIMENSIONS: J32001-63 and J32001-64 - 7 x 11 x 22 inches (178 x 279 x 559 mm)
J32001-67 - 14 x 11 x 22 inches (356 x 279 x 559 mm)
J32001-68 - 20 x 11 x 22 inches (508 x 279 x 559 mm)

NOTE: J32001-67 and J32001-68 replaces J32001-63 and J32001-64 respectively for future procurement.
J32001-64 replaces J32001-63 for future procurement.

BOEING PROPRIETARY - Copyright © Unpublished Work - See title page for details

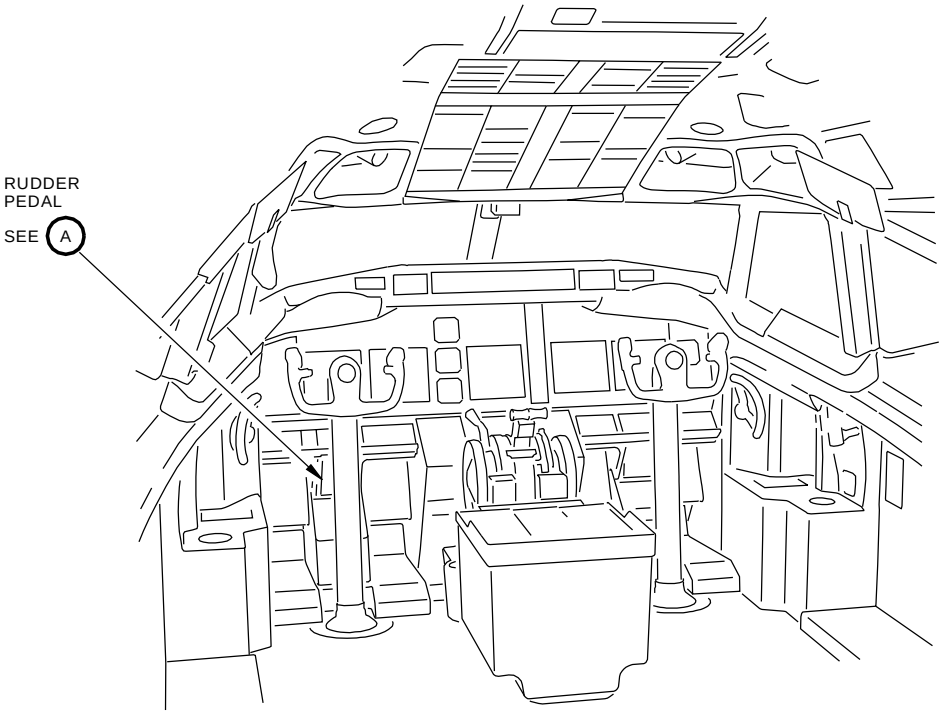

FLIGHT COMPARTMENT

1934544 S0000364555_V1

Rudder Pedal Locator
Figure 1

BOEING PROPRIETARY - Copyright © Unpublished Work - See title page for details

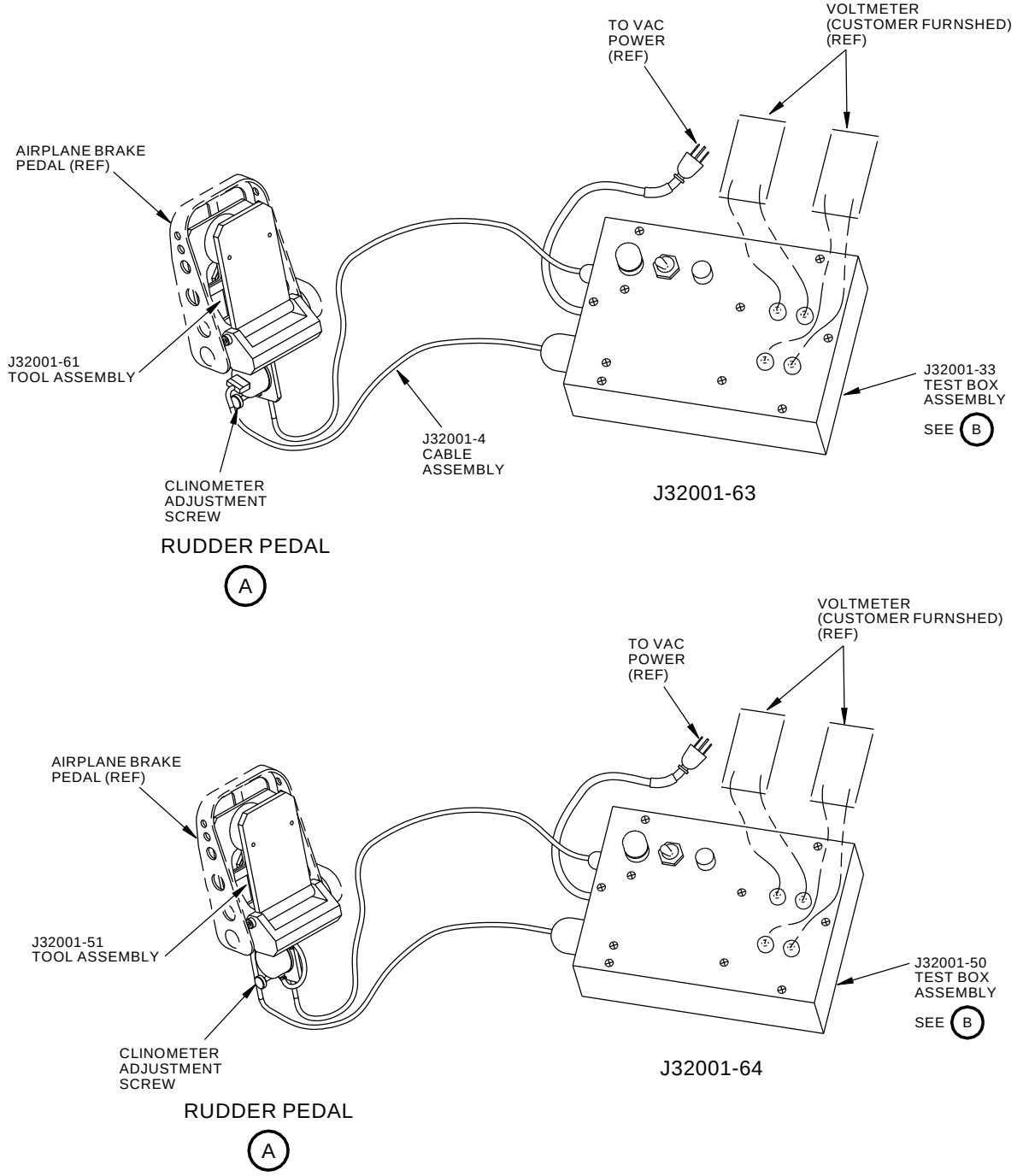

1934550 S0000364556_V1

Brake Pedal Measuring Equipment
Figure 2

BOEING PROPRIETARY - Copyright © Unpublished Work - See title page for details

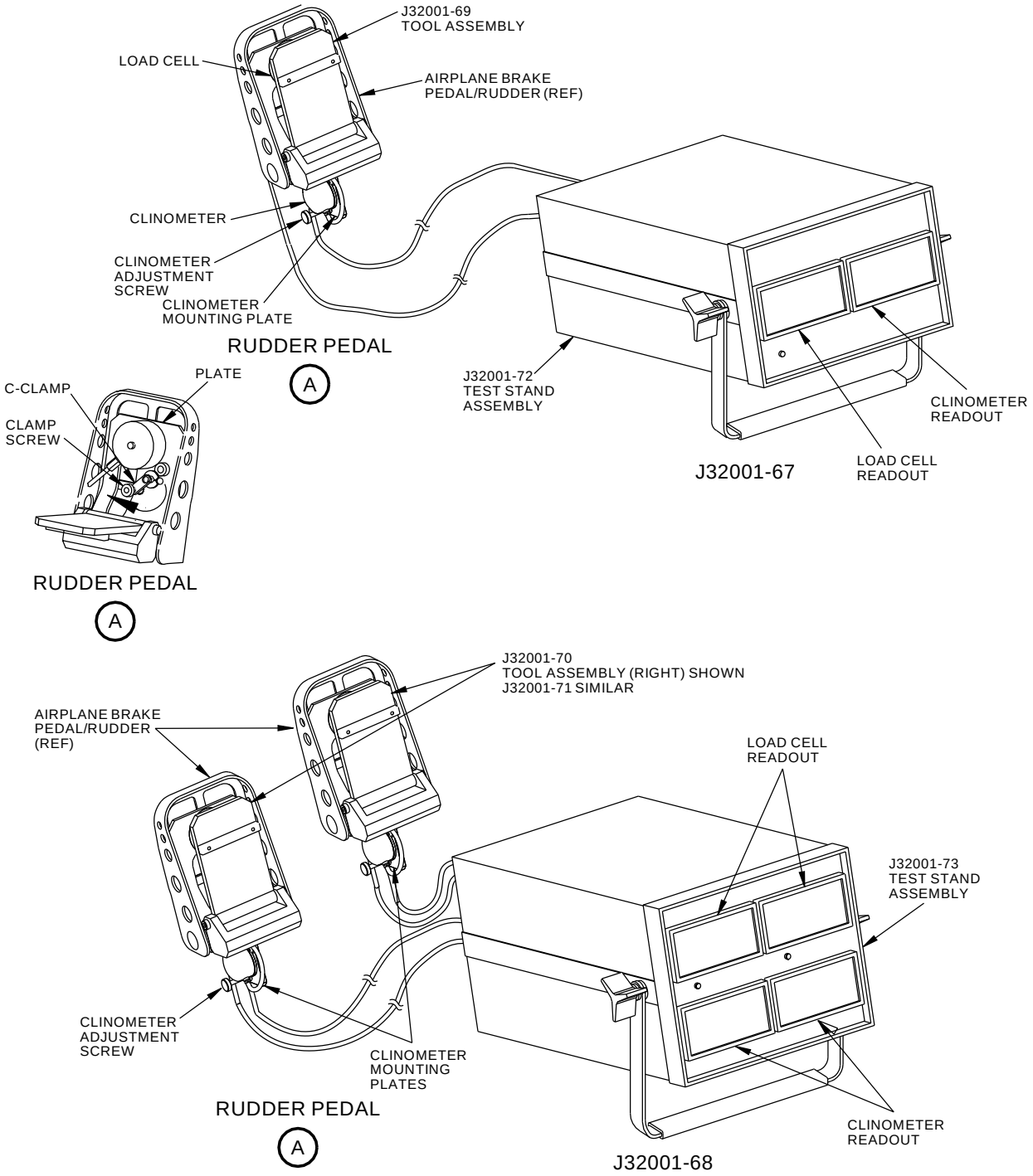

1934555 S0000364558_V1

Brake Pedal Measuring Equipment - Digital Read Out
Figure 3

BOEING PROPRIETARY - Copyright © Unpublished Work - See title page for details

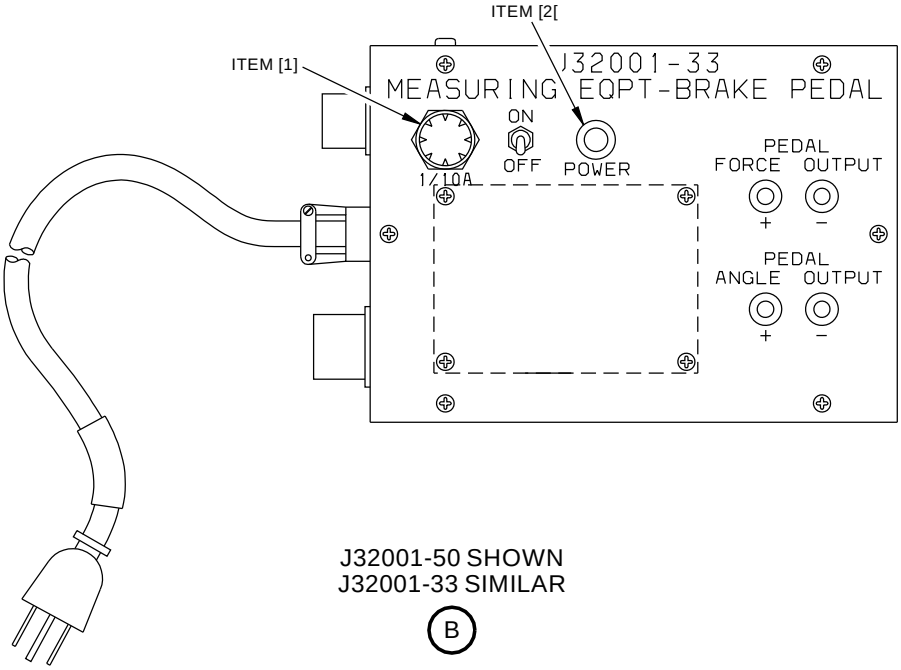

1934559 S0000364559_V1

Brake Pedal Measuring Equipment
Figure 4

BOEING PROPRIETARY - Copyright © Unpublished Work - See title page for details

REPAIRABLE/REPLACEABLE PARTS			
ITEM NO.	PART NO.	NOMENCLATURE	VENDOR CODE
[1]	313.100	FUSE	75915
[2]	507-4538-0931-610	LAMP	83330

BOEING PROPRIETARY - Copyright © Unpublished Work - See title page for details

PART NUMBER: J32062-1

NAME: TRANSPORTER AND POSITIONER EQUIPMENT - MAIN LANDING GEAR

AIRPLANE MAINTENANCE: YES

AMM 32-11-21

COMPONENT MAINTENANCE: NO

USAGE & DESCRIPTION: The J32062-1 transporter and positioner equipment is used on all 737 airplanes except 737-100 thru -500 airplanes.

J32062 is used for transporting the customer-furnished J32043 tower assemblies and C32045 holding fixture to the airplane and for positioning them to the main landing gear.

Refer to AMM 32-11-21 and the current J32062 drawing for complete usage instructions.

The J32062-1 equipment consists of lift assembly, bracket assembly, strap assembly, a caster, two wheels and related hardware.

WEIGHT: 300 lbs (136 kg)

DIMENSIONS: 58 x 60 x 80 inches (1473 x 1524 x 2032 mm)

BOEING PROPRIETARY - Copyright © Unpublished Work - See title page for details

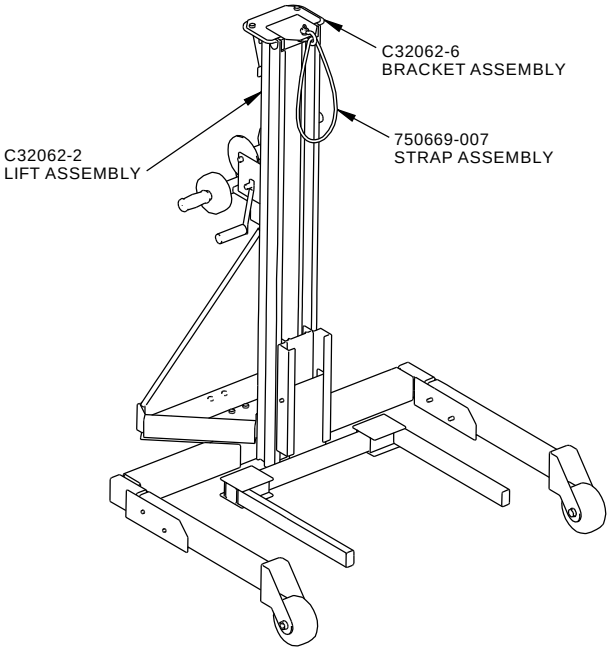

2038090 S0000409469_V2

Main Landing Gear Transporter and Positioner Equipment
Figure 1

BOEING PROPRIETARY - Copyright © Unpublished Work - See title page for details

PART NUMBER: C32020-1, -15

NAME: EXTENSION BAR - FUNCTIONAL TEST, NOSE LANDING GEAR STEERING

AIRPLANE MAINTENANCE: YES

AMM 32-51-00

COMPONENT MAINTENANCE: NO

USAGE & DESCRIPTION: The C32020-1 extension bar is used on all 737 airplanes except 737-100 thru -500 airplanes..

The C32020-15 adapter assembly is used on all 737 airplanes except 737-100 thru -500 airplanes.

C32020-1 is a stand-alone, extension bar assembly, used to manually rotate the nose landing gear during the steering functional test.

C32020-15 is an option to C32020-1. C32020-15 is an adapter assembly used together with a customer-furnished, J32052 extension bar to manually rotate the nose landing gear during the steering functional test. The J32052 extension bar would be used with an airline having a mixed fleet of 777 and 737 airplanes.

Refer to AMM 32-51-00 and the current C32050 drawing for complete usage instructions.

C32020-1 and -15 consist of:

C32020-1		
QUANTITY	**NOMENCLATURE**	**PART NUMBER**
1	EXTENSION BAR ASSEMBLY	C32020-2
1	STORAGE BOX	

C32020-15		
QUANTITY	**NOMENCLATURE**	**PART NUMBER**
1	ADAPTER ASSEMBLY	C32020-3
1	STORAGE BOX	

WEIGHT: C32020-1 - 15 lbs (7 kg)
C32020-15 - 2 lbs (1 kg)

DIMENSIONS: C32020-1 - 3 x 5 x 70 inches (76 x 127 x 1778 mm)
C32020-15 - 2 x 4 x 6 inches (51 x 102 x 152 mm)

BOEING PROPRIETARY - Copyright © Unpublished Work - See title page for details

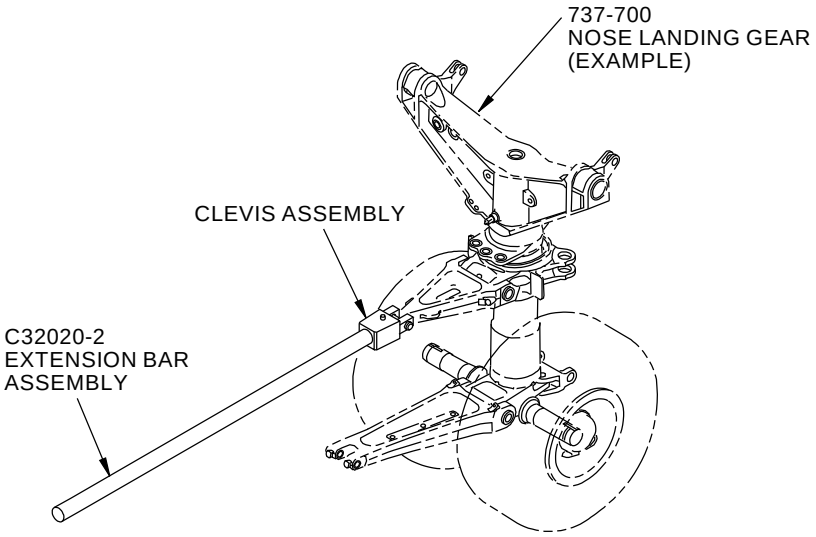

C32020-1
EXTENSION BAR ASSEMBLY USAGE

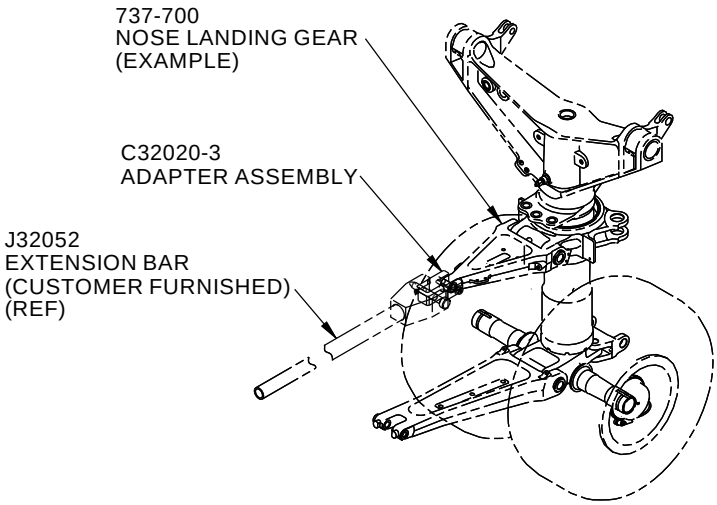

C32020-15
ADAPTER ASSEMBLY USAGE

H82973 S0006831914_V4

Nose Landing Gear Steering Functional Test Extension Bar
Figure 1

BOEING PROPRIETARY - Copyright © Unpublished Work - See title page for details

PART NUMBER: C32040-1, -6

NAME: SPANNER WRENCH - NOSE LANDING GEAR STEERING COLLAR RETAINER

AIRPLANE MAINTENANCE: YES

AMM 32-51-51, AMM 32-51-61

COMPONENT MAINTENANCE: YES

CMM 32-21-12

USAGE & DESCRIPTION: The C32040-1 (option) or C32040-6 (preferred) spanner wrench is used on all 737 airplanes except 737-100 thru -500 airplanes.

C32040 is used in conjunction with a customer-furnished torque wrench. C32040 is used to remove or install the 162A1406 steering collar retaining nut.

Refer to AMM 32-51-51, AMM 32-51-61, CMM 32-21-12 and the current C32040 drawing for complete usage instructions.

C32040-1 and -6 consist of:

C32040-1		
QUANTITY	**NOMENCLATURE**	**PART NUMBER**
1	SPANNER WRENCH	C32040-4
1	STORAGE BOX	

C32040-6		
QUANTITY	**NOMENCLATURE**	**PART NUMBER**
1	SPANNER WRENCH	C32040-8
1	STORAGE BOX	

WEIGHT: 5 lbs (2 kg)

DIMENSIONS: 2 x 9 x 7 inches (51 x 228 x 178 mm)

NOTE: C32040-6 replaces C32040-1 for future procurement.

BOEING PROPRIETARY - Copyright © Unpublished Work - See title page for details

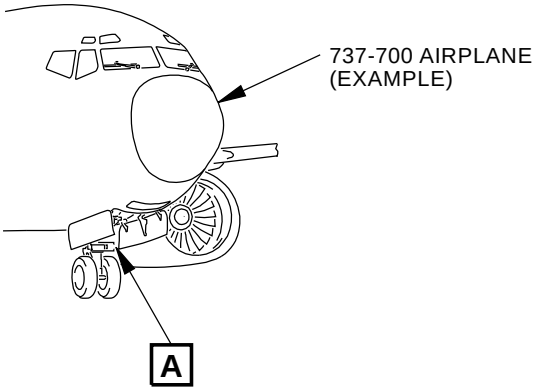

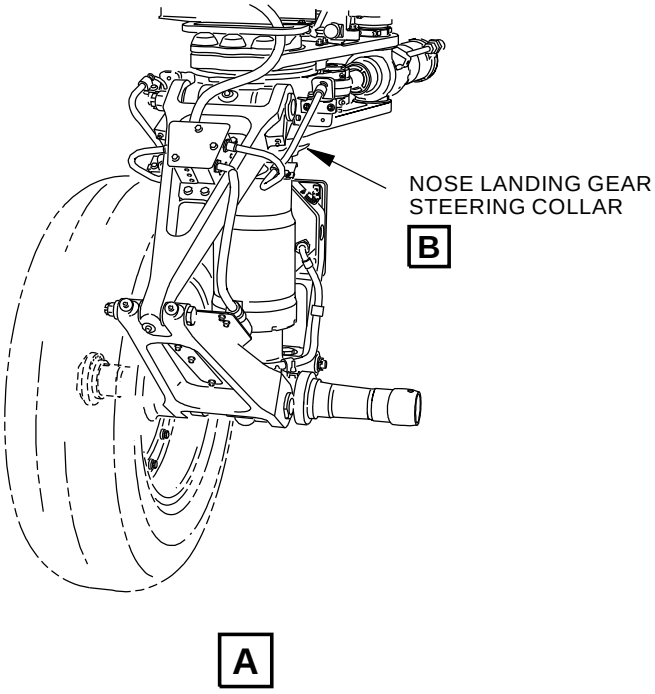

M27296 S0006831915_V3

Nose Landing Gear Steering Collar Retainer Spanner Wrench
Figure 1 (Sheet 1 of 2)

BOEING PROPRIETARY - Copyright © Unpublished Work - See title page for details

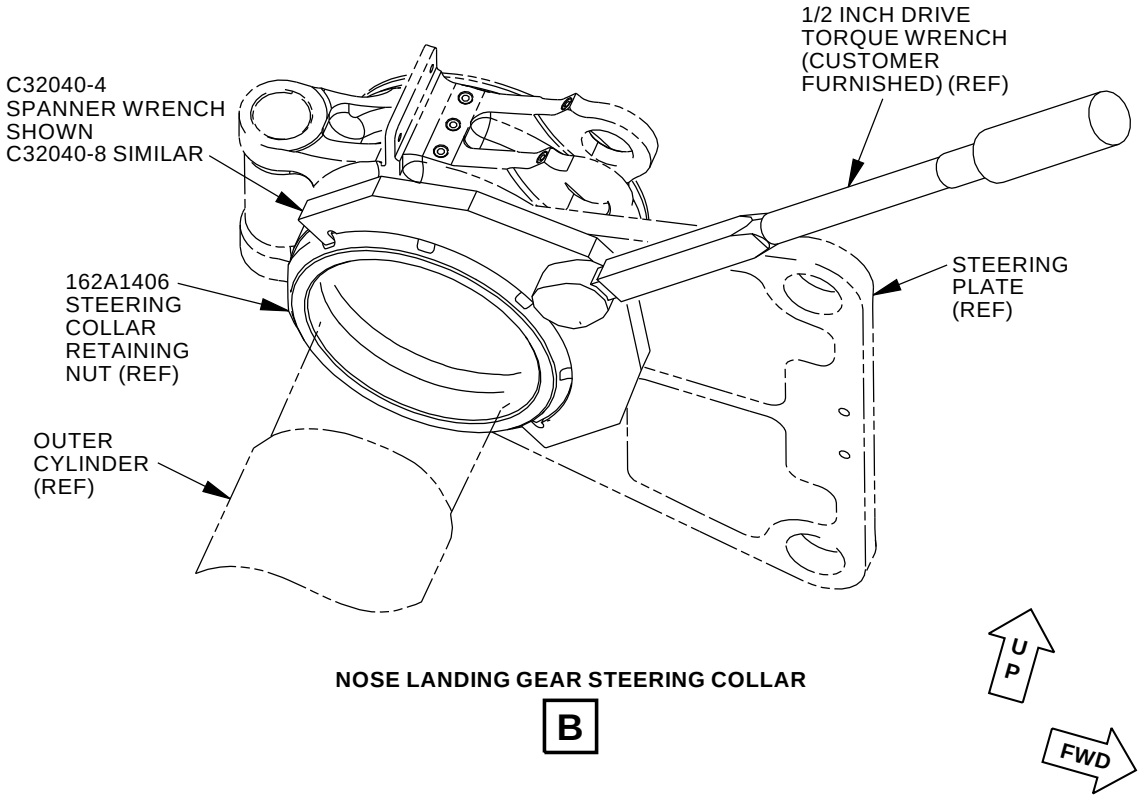

NOSE LANDING GEAR STEERING COLLAR

B

M27299 S0006831916_V4

Nose Landing Gear Steering Collar Retainer Spanner Wrench
Figure 1 (Sheet 2 of 2)

BOEING PROPRIETARY - Copyright © Unpublished Work - See title page for details

PART NUMBER: C32039-1

NAME: ADAPTER - FUNCTIONAL TEST, NOSE LANDING GEAR STEERING ACTUATOR

AIRPLANE MAINTENANCE: NO

COMPONENT MAINTENANCE: YES

CMM 32-51-52

USAGE & DESCRIPTION: The C32039-1 adapter is used during component maintenance on all 737 airplanes except 737-100 thru -500 airplanes.

C32039 is used in conjunction with a customer-furnished hydraulic test unit. C32039 provides an interface between the nose landing gear steering actuator extend ports and the hydraulic test unit. C32039 connects to the input and output of the 275A1101 nose gear steering actuator assembly. C32039 is held in place with two snapper pin assemblies. Common hydraulic hoses can then be attached to the adapter.

Refer to CMM 32-51-52 and the current C32039 drawing for complete usage instructions.

C32039-1 consists of:

C32039-1		
QUANTITY	**NOMENCLATURE**	**PART NUMBER**
1	ADAPTER ASSEMBLY	C32039-2
1	STORAGE BOX	

WEIGHT: 1.6 lbs (0.73 kg)

DIMENSIONS: 4 x 4 x 3 inches (101 x 101 x 76 mm)

BOEING PROPRIETARY - Copyright © Unpublished Work - See title page for details

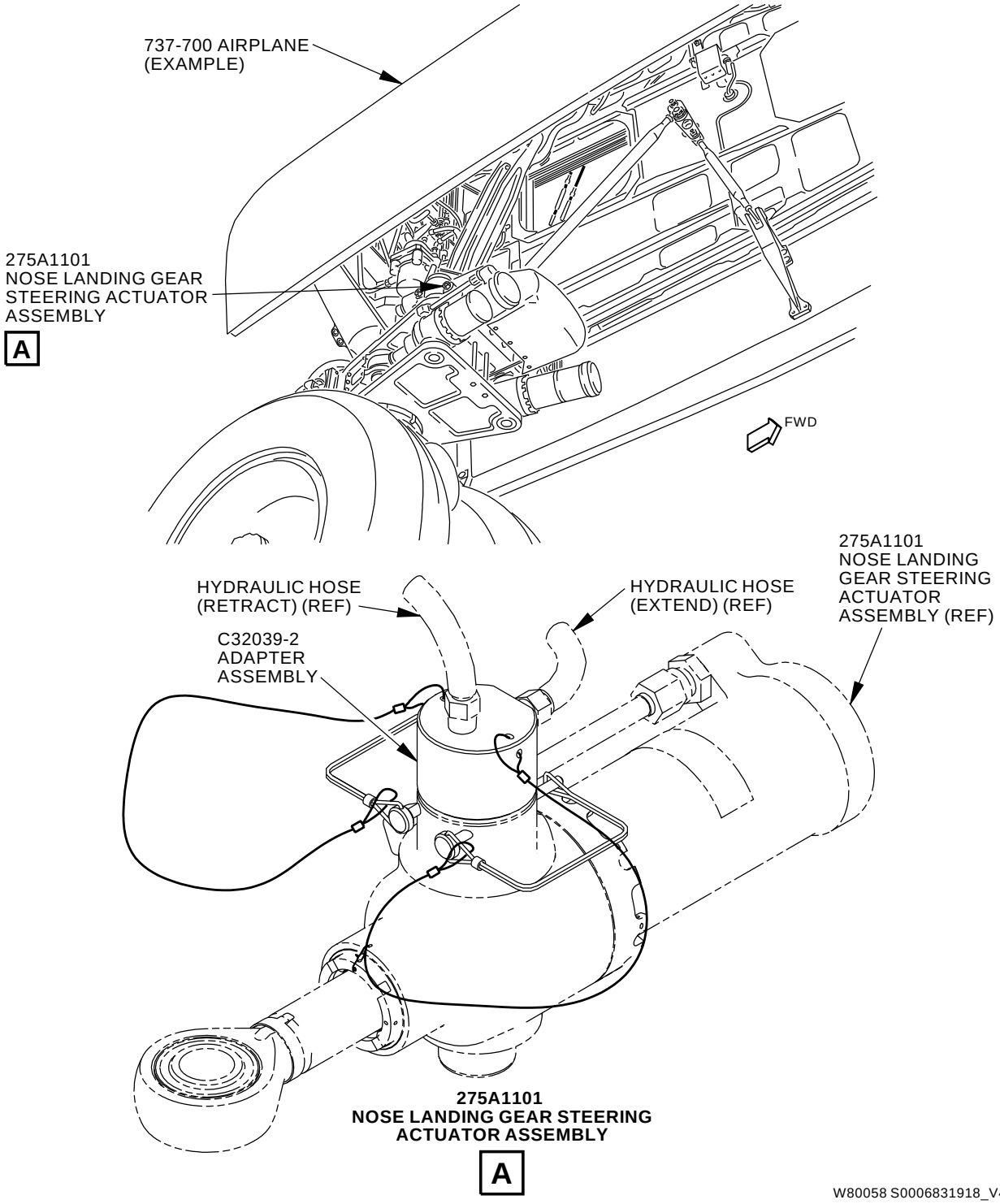

Nose Landing Gear Steering Actuator Functional Test Adapter
Figure 1

BOEING PROPRIETARY - Copyright © Unpublished Work - See title page for details

PART NUMBER: C32050-1

NAME: LOCKOUT PIN - TAIL SKID

AIRPLANE MAINTENANCE: YES

AMM 32-00-00, AMM 32-00-01, AMM 32-71-00, AMM 32-71-22

COMPONENT MAINTENANCE: NO

USAGE & DESCRIPTION: C32050-1 is used on 737-800SFP and 737-900SFP (Short Field Performance) airplanes and 737-7, -8, -8200 and -9 airplanes. C32050 is applicable only for 737 airplanes with the tail skid option installed.

C32050 is a used to lock the forward and aft lock links of the tail skid in the retracted or extended positions. C32050 is installed if maintenance is performed on or near the tail skid. C32050 may also be installed if aircraft dispatch is required with the tail skid locked in the retracted or extended positions. For flight, the “Remove Before Flight” warning streamer must be removed.

Refer to AMM 32-00-00, AMM 32-00-01, AMM 32-71-00, AMM 32-71-22 and the current C32050 drawing for complete usage information.

C32050-1 consists of:

C32050-1		
QUANTITY	**NOMENCLATURE**	**PART NUMBER**
1	LOCKOUT PIN ASSEMBLY	C32050-2
1	STORAGE BOX	

WEIGHT: 0.3 lbs (0.14 kg)

DIMENSIONS: 0.75 x 1.8 x 5.5 inches (19 x 25 x 140 mm)

BOEING PROPRIETARY - Copyright © Unpublished Work - See title page for details

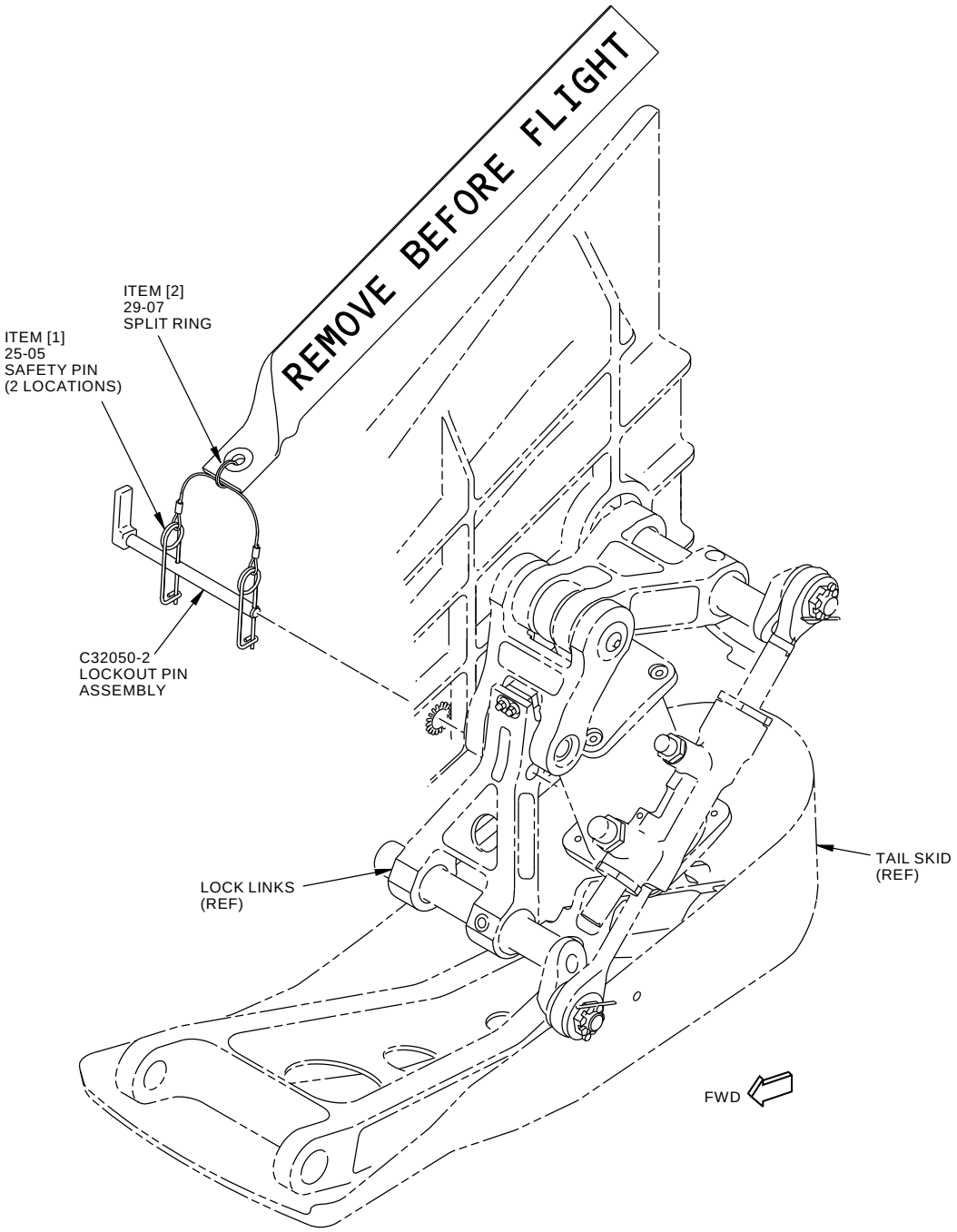

TAIL SKID LOCKOUT PIN

U91591 S0000222801_V3

Tail Skid Lockout Pin
Figure 1

BOEING PROPRIETARY - Copyright © Unpublished Work - See title page for details

REPAIRABLE/REPLACEABLE PARTS			
ITEM NUMBER	PART NUMBER	NOMENCLATURE	VENDOR CODE
[1]	C32050-8 (25-05)	SAFETY PIN	ITW SHAKEPROOF GROUP IRON RIDGE, WI 53035
[2]	C32050-9 (29-07)	SPLIT RING	ITW SHAKEPROOF GROUP IRON RIDGE, WI 53035

BOEING PROPRIETARY - Copyright © Unpublished Work - See title page for details