PART 6 - EDDY CURRENT

HORIZONTAL STABILIZER UPPER REAR SPAR CHORD - STAB STA 68 TO 164 (HFEC)

1. Purpose

A. To detect cracks in the upper rear spar chord of the horizontal stabilizer between stab sta 68.14 and 164.0 using high frequency eddy current.

B. 737 Supplemental Structural Inspection Document (D6-37089) Reference:

(1) Item: E-17

2. Equipment

A. Instrument - Refer to Part 6, 51-00-00, Procedure 4.

B. Probes - Straight or right angle shielded probes per Part 6, 51-00-00, Procedure 4, are available from NDT Product Engineering. P/N MP50 and P/N MP-902-40B are 0.125 inch diameter (max) pencil probes.

C. Reference Standard - Refer to Part 6, 51-00-00, Procedure 4.

NOTE: Refer to Part 1, 51-01-00, for data about the equipment manufacturers.

3. Prepare for the Inspection

A. Remove sealant to expose edge of skin cutouts.

B. Clean inspection surfaces.

4. Instrument Calibration

A. Refer to Part 6, 51-00-00, Procedure 4.

5. Inspection Procedure

A. Inspect per Part 6, 51-00-00, Procedure 4.

B. Figure 1 defines the inspection areas, probe placement and scanning patterns.

6. Inspection Results

A. A rapid meter movement occurring as probe is moved over a short distance is a potential crack indication and further investigation is required.

B. Refer to Part 6, 51-00-00, Procedure 4.

BOEING PROPRIETARY - Copyright © Unpublished Work - See title page for details

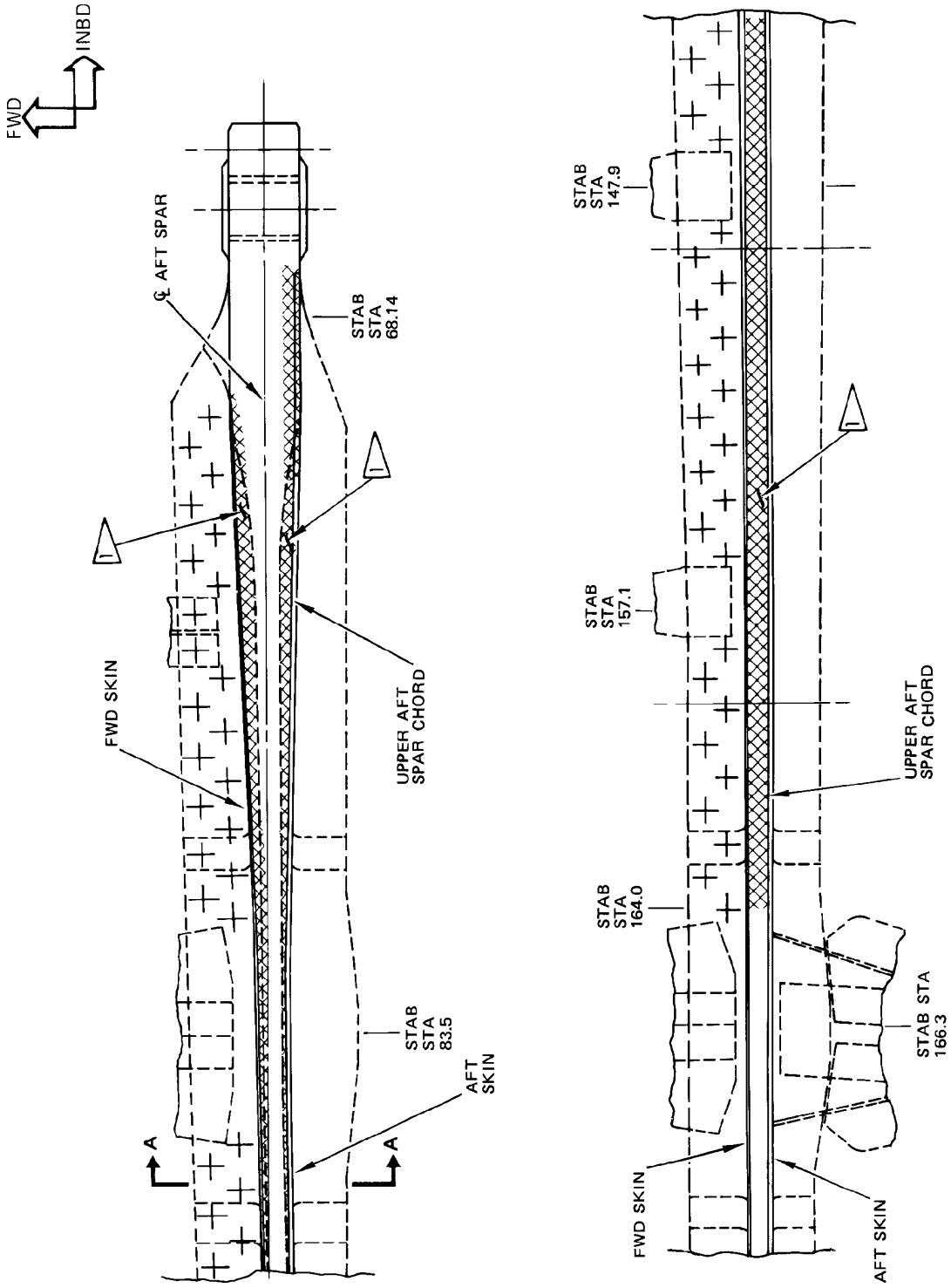

2162210 S0000473017_V1

Horizontal Stabilizer Aft Upper Spar Chord
Figure 1 (Sheet 1 of 2)

BOEING PROPRIETARY - Copyright © Unpublished Work - See title page for details

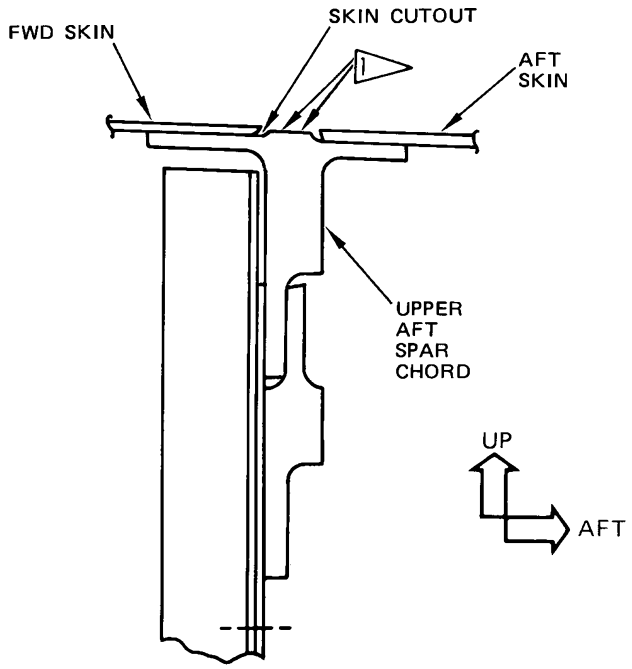

SECTION A–A

NOTES

- LEFT SIDE SHOWN, RIGHT SIDE SIMILAR

1 SCAN UPPER AFT REAR SPAR CHORD PER ◇◇◇ ON EDGE OF SKIN CUTOUTS BETWEEN STAB STA 68.14 AND STAB STA 164.0 ON RIGHT AND LEFT STABILIZERS

2162211 S0000473018_V1

Horizontal Stabilizer Aft Upper Spar Chord
Figure 1 (Sheet 2 of 2)

BOEING PROPRIETARY - Copyright © Unpublished Work - See title page for details

PART 6 - EDDY CURRENT

HORIZONTAL STABILIZER CENTER SECTION REAR SPAR UPPER CHORD AT GUSSETS (HFEC)

1. Purpose

A. To look for cracks in the upper chord of the rear spar in the center section of the horizontal stabilizer around the four gusset plates. This procedure uses high frequency eddy current.

B. Service Bulletin Reference: 737-55A1031

C. 737 Maintenance Planning Document (D6-17594; D6-38278) Reference:

(1) Item: 6-55-01

(2) Item: S55-01-A

D. 737 Supplemental Structural Inspection Document (D6-37089 for 737-100, -200, -200C) (D6-82669 for -300 thru -500) Reference:

(1) Item: E-14

(2) Item: E-14A

2. Equipment

A. General

(1) An impedance plane display or a meter display instrument can be used to do this inspection.

(2) Refer to Part 1, 51-01-00, for data about the equipment manufacturers.

B. Instrument

(1) Use an eddy current instrument that:

(a) Can be calibrated as specified in this procedure.

(b) Operates at a frequency between 50 kHz to 500 kHz.

C. Probes

(1) Use a 0.12 inch (3.0 mm) diameter (or smaller), shielded, high frequency, pencil probe as shown in Part 6, 51-00-00, Procedure 4, Figure 1. The probe that follows was used to help prepare this procedure.

(a) MTF902-50B; NDT Engineering Corp.

D. Reference Standard

(1) Use reference standard 126, shown in Part 6, 51-00-00, Procedure 4, Figure 4.

3. Prepare for the Inspection

A. Turn the horizontal stabilizer into the full down position and lock the controls.

B. Get access to the inspection area through the body access door in the 48 section and the cutout in the BS 1088 bulkhead.

C. Clean the surfaces at the inspection areas. See Figure 1.

4. Instrument Calibration

A. For instruments that have a meter display, calibrate the equipment as specified in the calibration instructions of Part 6, 51-00-00, Procedure 4, par. 5.

BOEING PROPRIETARY - Copyright © Unpublished Work - See title page for details

B. For instruments that have an impedance plane display, calibrate the equipment as specified in the calibration instructions of Part 6, 51-00-00, Procedure 23, par. 5.

5. Inspection Procedure

A. Examine the upper chord of the rear spar in the center section of the horizontal stabilizer for cracks around the four gusset plates as shown in Figure 1.

(1) For instruments that have a meter display, refer to Part 6, 51-00-00, Procedure 4, par. 6 for the inspection procedure.

(2) For instruments that have an impedance plane display, refer to Part 6, 51-00-00, Procedure 23, par. 6 for the inspection procedure.

6. Inspection Results

A. For instruments that have a meter display, refer to Part 6, 51-00-00, Procedure 4, par. 7 to make an analysis of the indications that occurred during the inspection.

B. For instruments that have an impedance plane display, refer to Part 6, 51-00-00, Procedure 23, par. 7 to make an analysis of the indications that occurred during the inspection.

C. If the inspection is at a fastener location, remove the fastener and do an eddy current inspection of the open hole as specified in Part 6, 51-00-00, Procedure 1, Part 6, 51-00-00, Procedure 11 or Part 6, 51-00-00, Procedure 16.

BOEING PROPRIETARY - Copyright © Unpublished Work - See title page for details

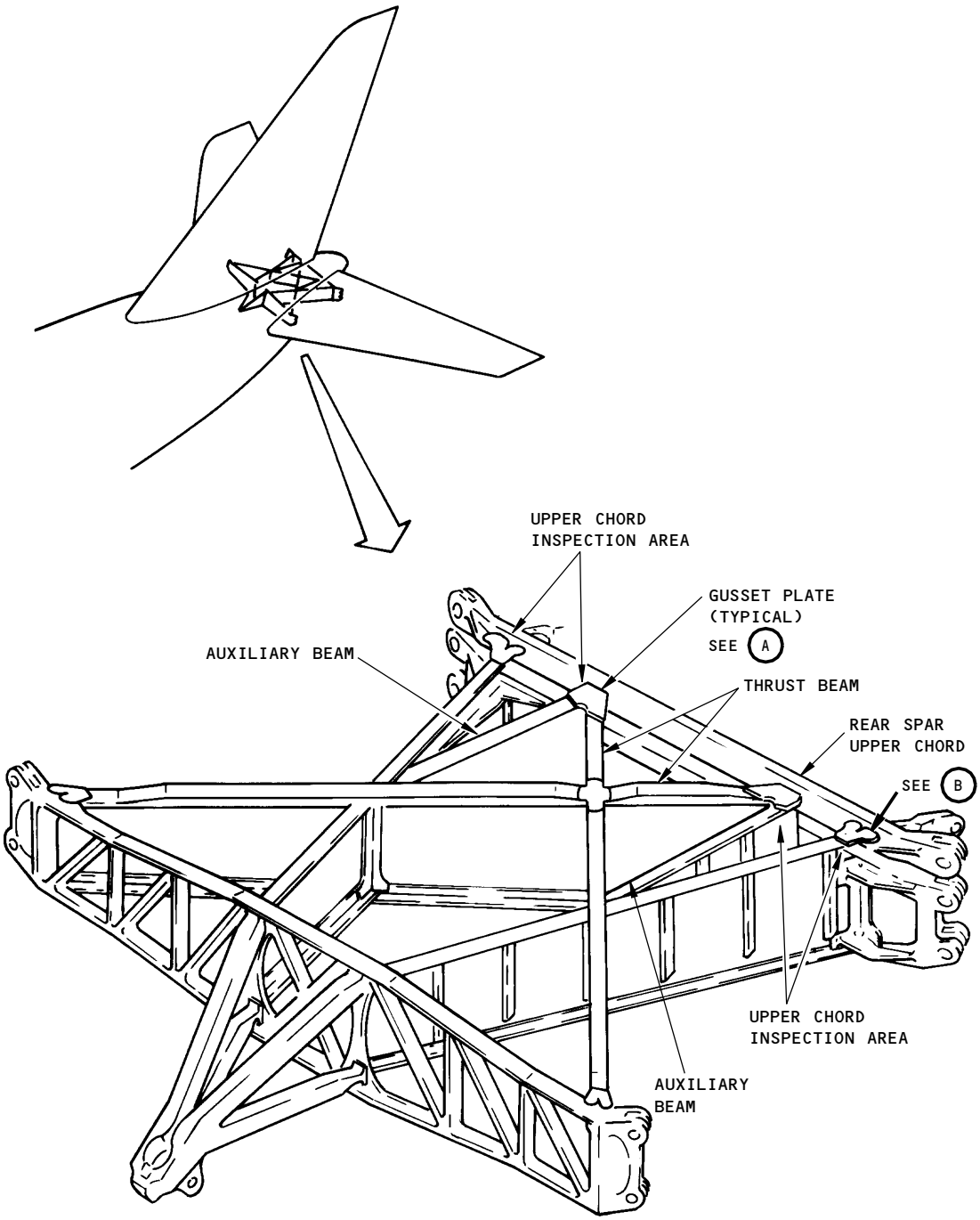

2162213 S0000473021_V1

Upper Chord of the Rear Spar in the Center Section of the Horizontal Stabilizer (around the Gusset Plates) Inspection Area
Figure 1 (Sheet 1 of 2)

BOEING PROPRIETARY - Copyright © Unpublished Work - See title page for details

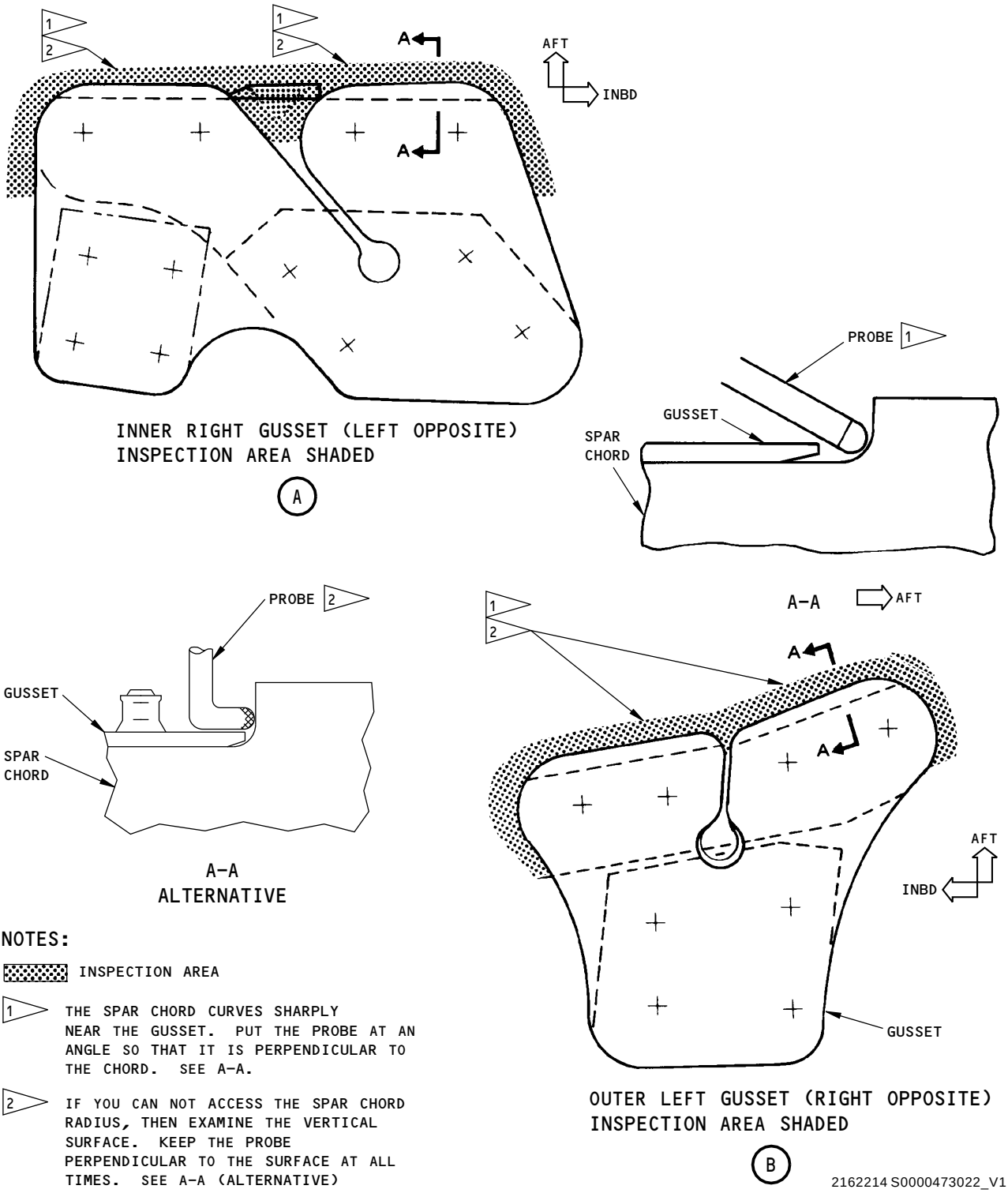

Upper Chord of the Rear Spar in the Center Section of the Horizontal Stabilizer (around the Gusset Plates) Inspection Area
Figure 1 (Sheet 2 of 2)

BOEING PROPRIETARY - Copyright © Unpublished Work - See title page for details

PART 6 - EDDY CURRENT

HORIZONTAL STABILIZER CENTER SECTION REAR SPAR UPPER CHORD TO WEB (HFEC)

1. Purpose

A. To examine the vertical flange of the upper chord that is in the rear spar of the center section of the horizontal stabilizer for cracks. This procedure uses High Frequency Eddy Current (HFEC) to look for cracks that start from the fasteners that attach the upper chord to the web.

B. 737 Supplemental Structural Inspection Document (D6-37089) Reference:

(1) Item: E-14

(2) Item: E-14B

2. Equipment

A. General

(1) An impedance plane display or a meter display instrument can be used to do this inspection.

(2) Refer to Part 1, 51-01-00, for data about the equipment manufacturers.

B. Instrument

(1) Use an eddy current instrument that:

(a) Can be calibrated as specified in this procedure.

(b) Operates at a frequency of 50 kHz to 300 kHz.

C. Probes

(1) Use a shielded, high frequency, pencil probe as shown in Part 6, 51-00-00, Procedure 4, Figure 1. The probes that follow were used to help prepare this procedure.

(a) MTF902-50B; NDT Engineering Corp.

(b) MTF905-60B; NDT Engineering Corp.

D. Reference Standard

(1) For the inspection around the fasteners and plates, use reference standard 188A. Make or buy reference standard 188A as shown in Part 6, 51-00-00, Procedure 4, Figure 6.

3. Prepare for the Inspection

A. Put the horizontal stabilizer into the full down position and lock the controls.

B. Get access through the body access door in Section 48 and the cutout in the BS 1088 bulkhead.

C. Clean the surfaces at the inspection areas. See Figure 1.

4. Instrument Calibration

A. For instruments that have a meter display, calibrate the equipment as specified in the calibration instructions of Part 6, 51-00-00, Procedure 4, par. 5.

B. For instruments that have an impedance plane display, calibrate the equipment as specified in the calibration instructions of Part 6, 51-00-00, Procedure 23, par. 5.

5. Inspection Procedure

A. Examine the vertical flange of the upper chord at the rear spar of the center section of the horizontal stabilizer for cracks at the fasteners, angles and reinforcement plates as shown in Figure 1.

BOEING PROPRIETARY - Copyright © Unpublished Work - See title page for details

(1) For instruments that have a meter display, refer to Part 6, 51-00-00, Procedure 4, par. 6 for the inspection procedure.

(2) For instruments that have an impedance plane display, refer to Part 6, 51-00-00, Procedure 23, par. 6 for the inspection procedure.

6. Inspection Results

A. For instruments that have a meter display, refer to Part 6, 51-00-00, Procedure 4, par. 7 to make an analysis of the indications that occurred during the inspection.

B. For instruments that have an impedance plane display, refer to Part 6, 51-00-00, Procedure 23, par. 7 to make an analysis of the indications that occurred during the inspection.

C. If the inspection is at a fastener location, remove the fastener and do an eddy current inspection of the open hole as specified in Part 6, 51-00-00, Procedure 1, Part 6, 51-00-00, Procedure 11 or Part 6, 51-00-00, Procedure 19.

BOEING PROPRIETARY - Copyright © Unpublished Work - See title page for details

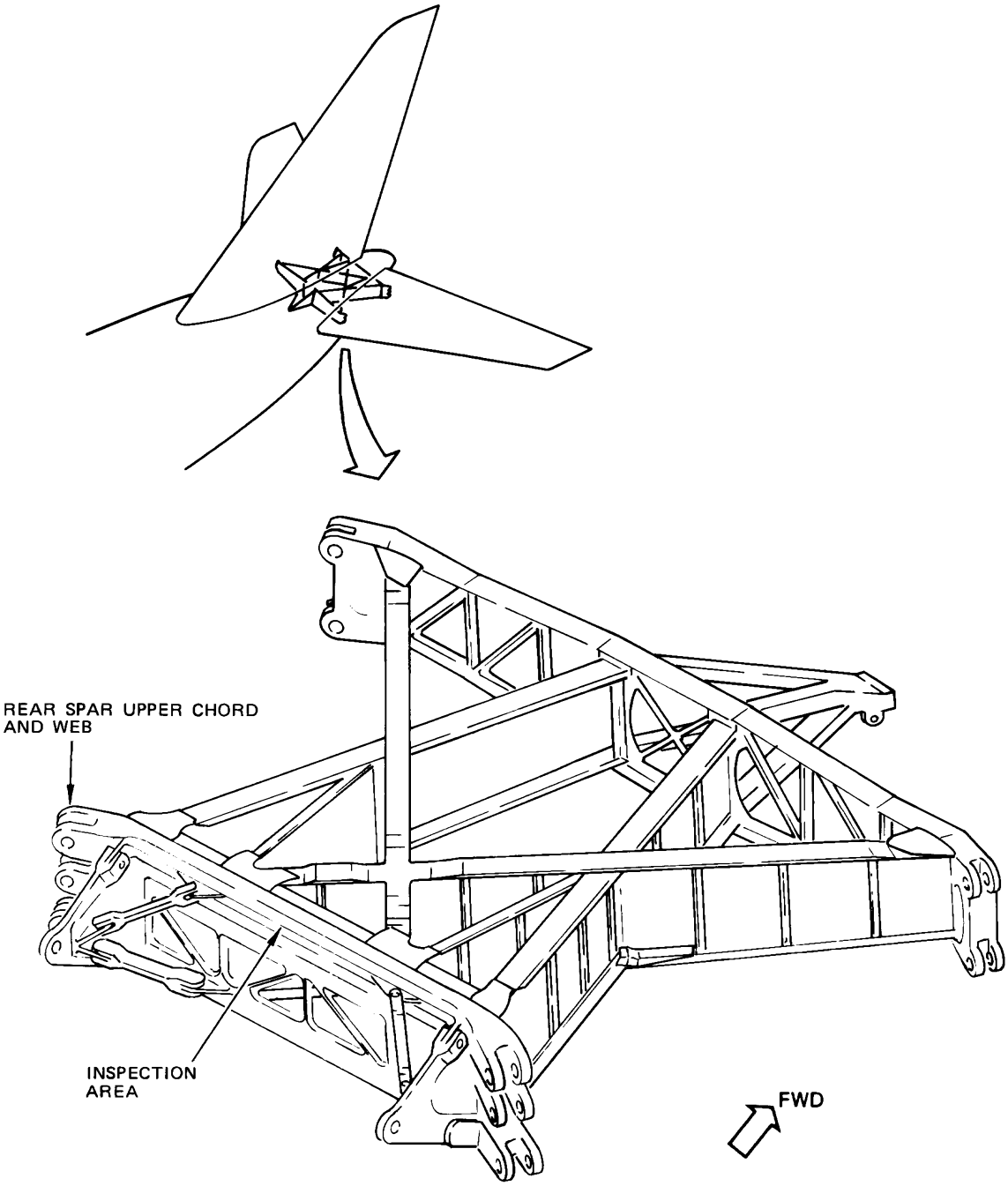

CENTER SECTION (ROTATED 180°)

2162215 S0000473025_V1

Horizontal Stabilizer Center Section Rear Spar Upper Chord to Web
Figure 1 (Sheet 1 of 2)

BOEING PROPRIETARY - Copyright © Unpublished Work - See title page for details

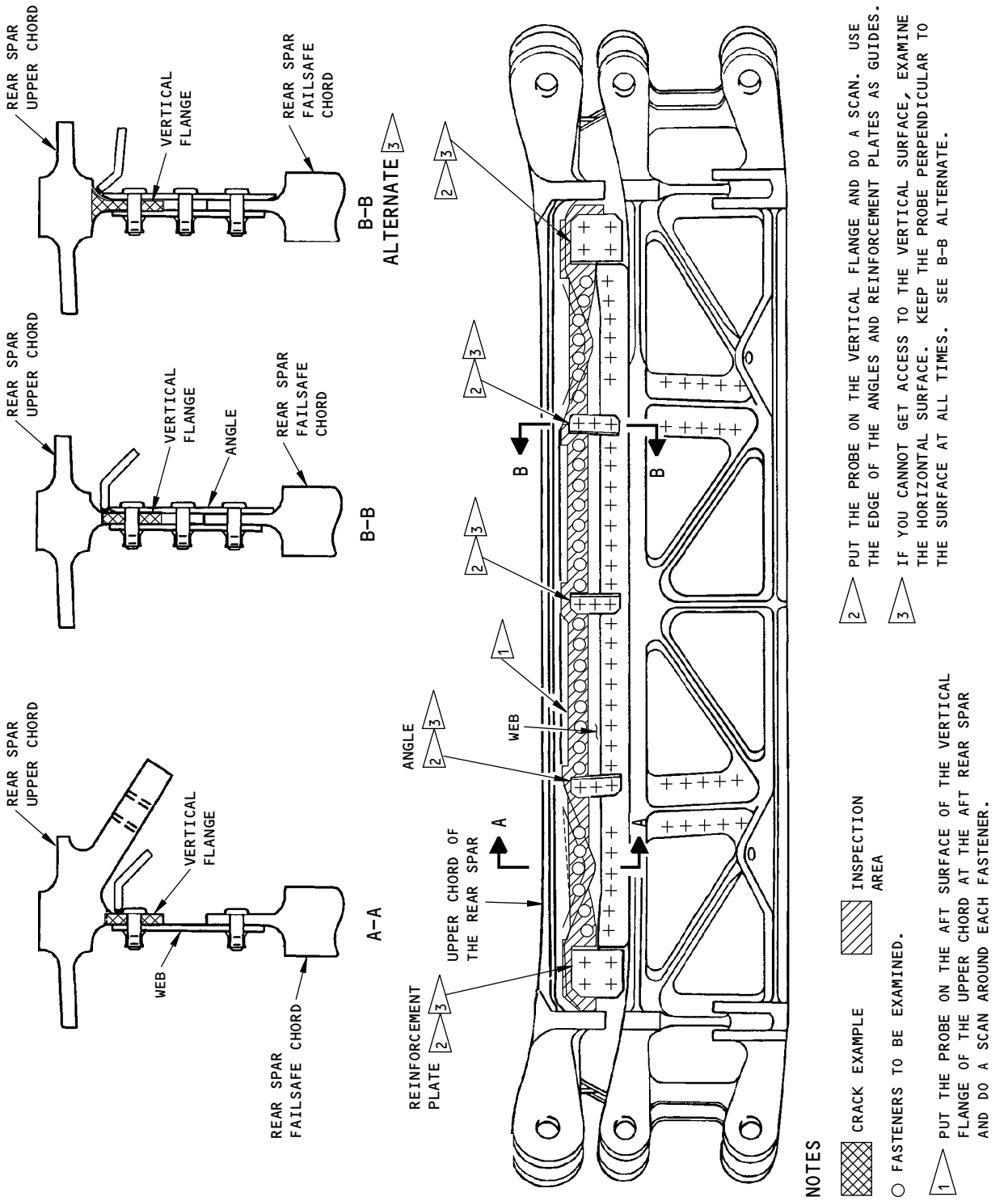

Horizontal Stabilizer Center Section Rear Spar Upper Chord to Web
Figure 1 (Sheet 2 of 2)

BOEING PROPRIETARY - Copyright © Unpublished Work - See title page for details

PART 6 - EDDY CURRENT

HORIZONTAL STABILIZER CENTER SECTION REAR SPAR ATTACHMENT LUG AND CLEVIS FITTINGS (HFEC)

1. Purpose

A. Use this high frequency eddy current (HFEC) procedure to find cracks in the horizontal stabilizer center section rear spar upper chord terminal clevis fittings at BL 28.0 as specified in Service Bulletin 737-55A1029.

B. Use this HFEC procedure to find cracks in the outboard horizontal stabilizer rear spar terminal lug fittings at BL 28.0 as specified by 737 SSID Item E-19.

C. Service Bulletin Reference: 737-55A1029, 737-55A1033

D. 737 Supplemental Structural Inspection Document (SSID)(D6-37089) Reference:

(1) Item: E-19

2. Equipment

NOTE: Refer to Part 1, 51-01-00, for data about the equipment manufacturers.

A. Instrument - Use an eddy current instrument that can be calibrated on the reference standard as specified in Paragraph 4. The instrument that follows was used to help prepare this procedure.

(1) ED520; Magnaflux Corp. - Refer to Part 6, 51-00-00, Procedure 4.

B. Probe - Use a shielded, right-angle pencil probe as specified in Part 6, 51-00-00, Procedure 4 that has the dimensions that follow:

A = 0.030 inch (0.76 mm), B = 0.155 inch (3.94 mm), and C = 5.0 inches (127 mm).

(1) P/N MP 9003-50FX; NDT Product Engineering.

NOTE: This probe is flexible and can be bent to the necessary shape.

C. Probe - Use a shielded, straight pencil probe as specified in Part 6, 51-00-00, Procedure 4.

(1) P/N MP-50; NDT Product Engineering.

D. Reference Standard - Refer to Part 6, 51-00-00, Procedure 4.

3. Prepare for the Inspection

A. Remove access panels 9123 (left) and 9223 (right).

B. Clean the inspection surfaces shown in Figure 1 and Figure 2.

4. Instrument Calibration

A. Calibrate the instrument as specified in Part 6, 51-00-00, Procedure 4 or Part 6, 51-00-00, Procedure 23.

5. Inspection Procedure

A. Examine the upper rear clevis of the horizontal stabilizer center section as specified by flagnote 1 in Figure 2.

B. Examine the upper rear terminal lug of the horizontal stabilizer as specified by flagnote 2 in Figure 2.

C. Do the inspection scans as specified in Part 6, 51-00-00, Procedure 4 or Part 6, 51-00-00, Procedure 23.

BOEING PROPRIETARY - Copyright © Unpublished Work - See title page for details

6. **Inspection Results**

A. A fast meter movement that occurs as the probe is moved a short distance is a possible crack indication and more inspection is necessary.

B. Refer to Part 6, 51-00-00, Procedure 4 or Part 6, 51-00-00, Procedure 23 for instructions to help make an analysis of the indications that occur during the inspection.

BOEING PROPRIETARY - Copyright © Unpublished Work - See title page for details

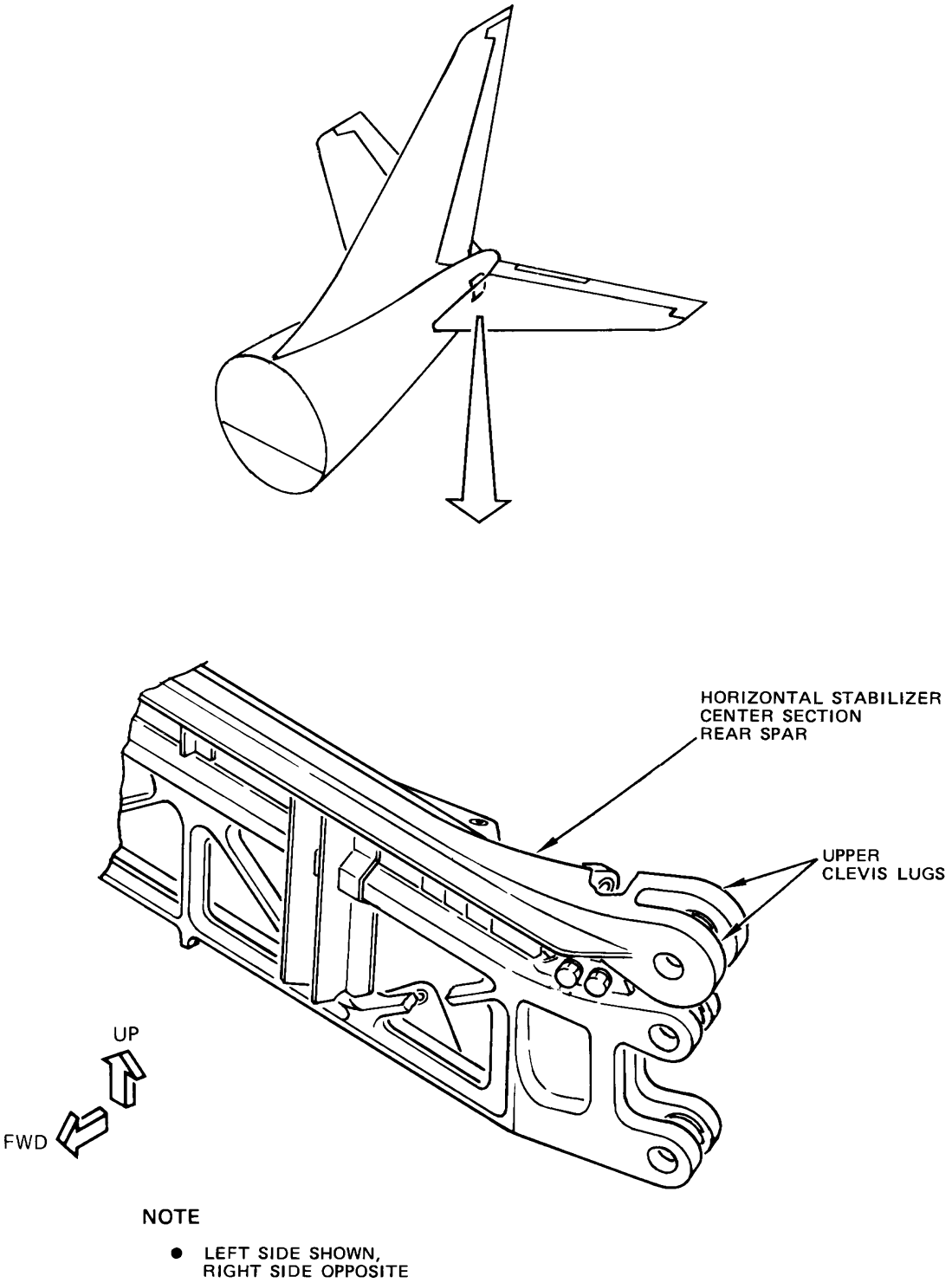

2162219 S0000473030_V1

Horizontal Stabilizer Upper Terminal Rear Spar Lug and Clevis Fittings
Figure 1

BOEING PROPRIETARY - Copyright © Unpublished Work - See title page for details

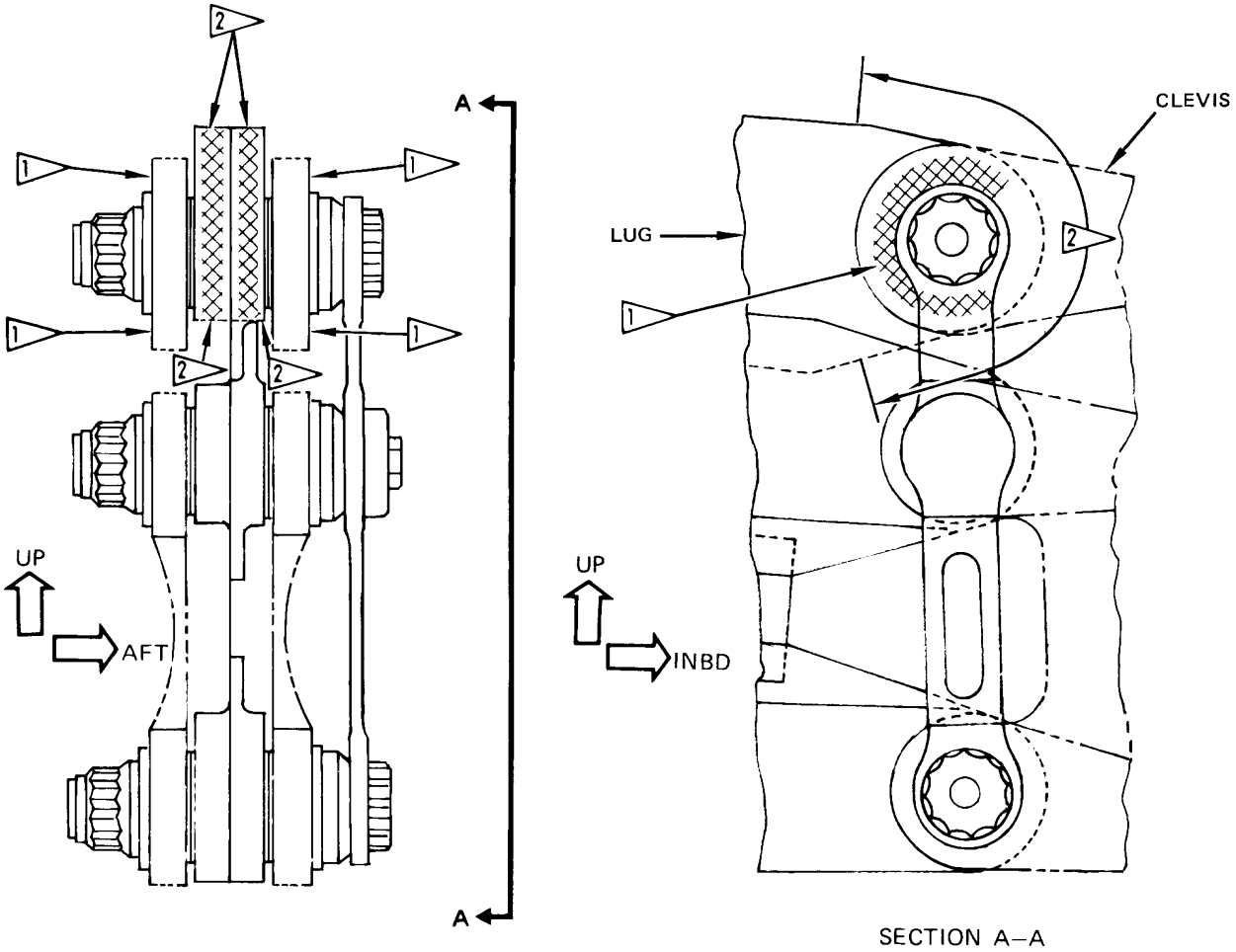

NOTES

- LEFT SIDE SHOWN, RIGHT SIDE OPPOSITE
- 1 PLACE PROBE ON THE FACE OF THE CLEVIS FLANGES AND SCAN USING WASHER ON ATTACHMENT BOLT AS A GUIDE
- 2 PLACE PROBE ON THE EDGE OF THE LUG FITTING AND SCAN
- AREA TO BE INSPECTED

2162220 S0000473031_V1

Horizontal Stabilizer Rear Spar Terminal Lugs and Clevis Fittings
Figure 2

BOEING PROPRIETARY - Copyright © Unpublished Work - See title page for details

PART 6 - EDDY CURRENT

HORIZONTAL STABILIZER REAR SPAR UPPER CHORD AT STAB STA 68.14 AND 83.50 (HFEC)

1. Purpose

A. Use this procedure to help find surface cracks in the upper chord of the rear spar of the horizontal stabilizer between STAB STA 68.14 and 83.50. The areas to examine are identified in Figure 1.

B. The upper chord configurations of the rear spar for the -100/200 and the -300/400/500 airplanes are different. The -300/400/500 airplanes have a gap of 0.080 inches (2.0 mm) between the rib attach tee for the elevator hinge and the upper chord.

C. It is necessary to use a blade type pencil probe to examine the -300/400/500 airplanes. The blade type pencil probe can also be used to examine the -100/200 airplanes. See flagnote 1 in Figure 1, for this inspection area.

D. 737-100/200 Supplemental Structural Inspection Document (D6-37089) Reference:

(1) Item: E-17

E. 737-300 thru -500 Supplemental Structural Inspection Document Reference:

(1) Item: E-17

2. Equipment

A. General

(1) Use inspection equipment that can be calibrated on the reference standard as specified in Paragraph 4.

(2) Refer to Part 1, 51-01-00, for data about the equipment manufacturers.

B. Instrument

(1) Use an eddy current instrument that:

(a) Has an impedance plane display.

(b) Operates at a frequency range of 50 to 500 kHz.

(2) The instruments that follow were used to help prepare this procedure.

(a) Nortec 1000/2000; Staveley

(b) Locator 2d; Hocking

C. Probes

(1) To examine the -100/200 airplanes, use a 0.13 inch (3.3 mm) diameter, shielded, right angle pencil probe with a maximum drop of 0.030 inch (7.6 mm), a minimum length of 6 inches (152 mm) and a flexible shaft.

(a) Refer to Part 6, 51-00-00, Procedure 23, paragraph 3.C, for data about probe selection.

(b) The probes that follow were used to help prepare this procedure.

1) MTF-9003-60FX; Olympus NDT

2) TPEN903-6; Techna NDT

(2) To examine the -300/400/500 airplanes, use a 0.045 inch (1.14 mm) thick, shielded, straight blade probe with a minimum length of 6 inches (152 mm) and a flexible shaft.

(a) The probes that follow were used to help prepare this procedure.

BOEING PROPRIETARY - Copyright © Unpublished Work - See title page for details

1) MP.045-60BL; NDT engineering (Olympus, NDT)
2) TBL045-6; Techna NDT

D. Reference Standards

(1) Use reference standard 126 (or an equivalent) as given in Part 6, 51-00-00, Procedure 23, paragraph 3.D.

3. Prepare for the Inspection

A. Put the horizontal stabilizer in the full down position.

B. Remove trailing edge access panels 9105L, 9106L, 9205R and 9206R.

C. Identify the inspection locations shown in Figure 1.

D. Lightly smooth the rough surfaces and sharp edges of chipped paint.

E. Fully clean the inspection area.

4. Instrument Calibration

A. Calibrate the equipment as specified in Part 6, 51-00-00, Procedure 23, paragraph 5. Use reference standard 126 (or an equivalent) for the calibration.

5. Inspection Procedure

A. Make scans to completely examine the inspection area identified in Figure 1. Refer to Part 6, 51-00-00, Procedure 23, paragraph 6, for the inspection procedure.

B. Do Paragraph 5.A. on the opposite side of the airplane.

6. Inspection Results

A. Refer to Part 6, 51-00-00, Procedure 23, paragraph 7, for instructions to help make an analysis of indications that occur during the inspection.

BOEING PROPRIETARY - Copyright © Unpublished Work - See title page for details

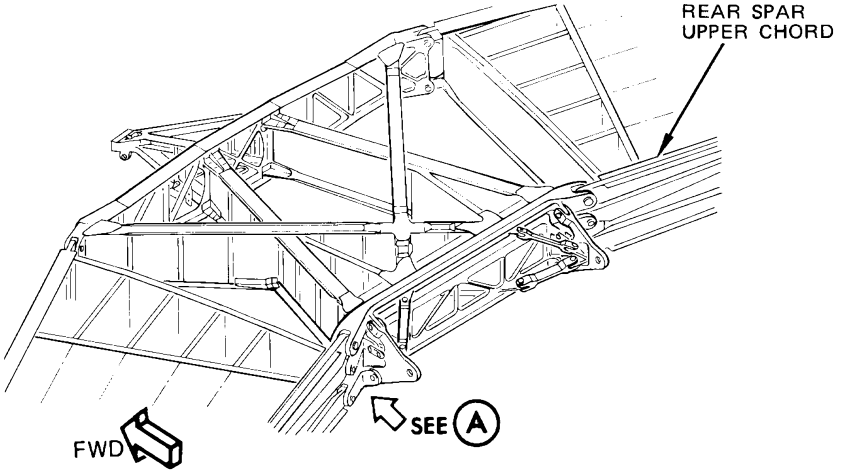

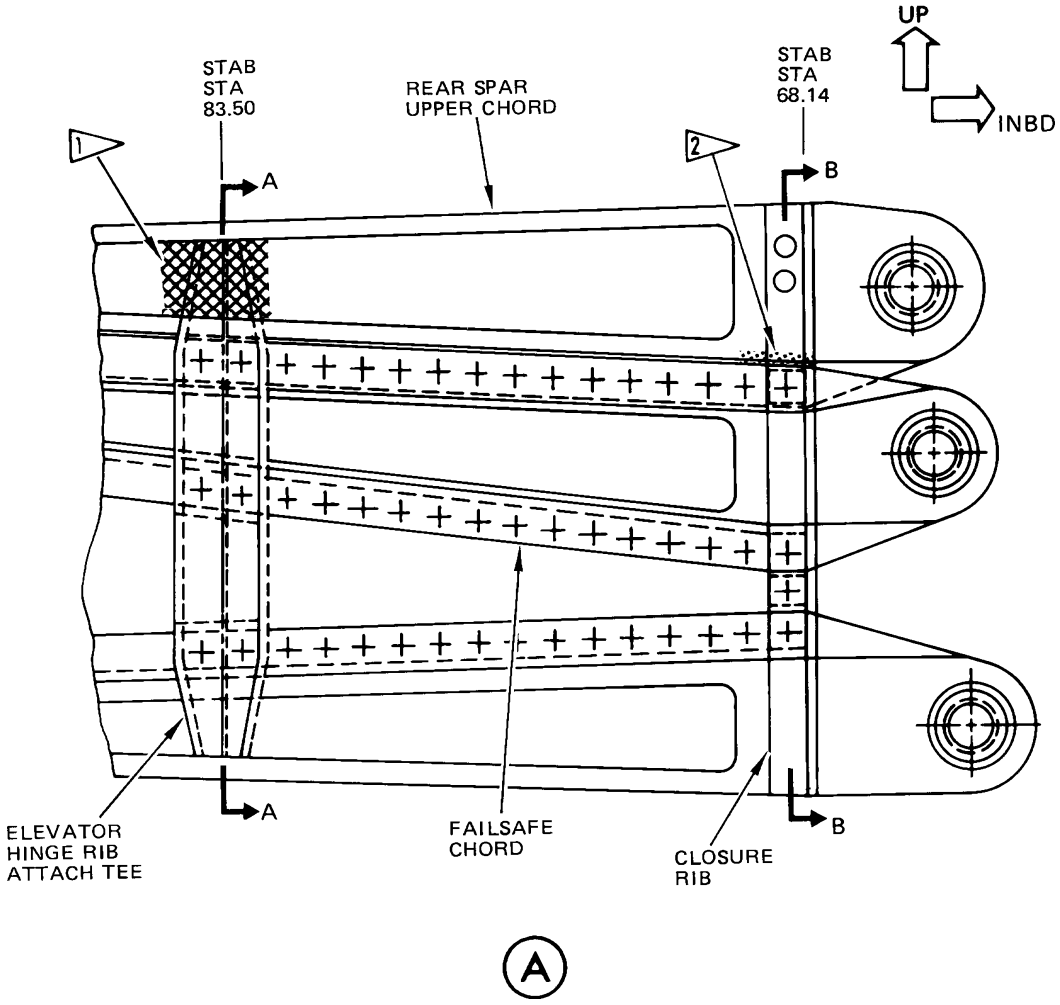

2162221 S0000473034_V1

Horizontal Stabilizer Rear Spar Upper Chord - Stab Sta 68.14 and 83.50
Figure 1 (Sheet 1 of 2)

BOEING PROPRIETARY - Copyright © Unpublished Work - See title page for details

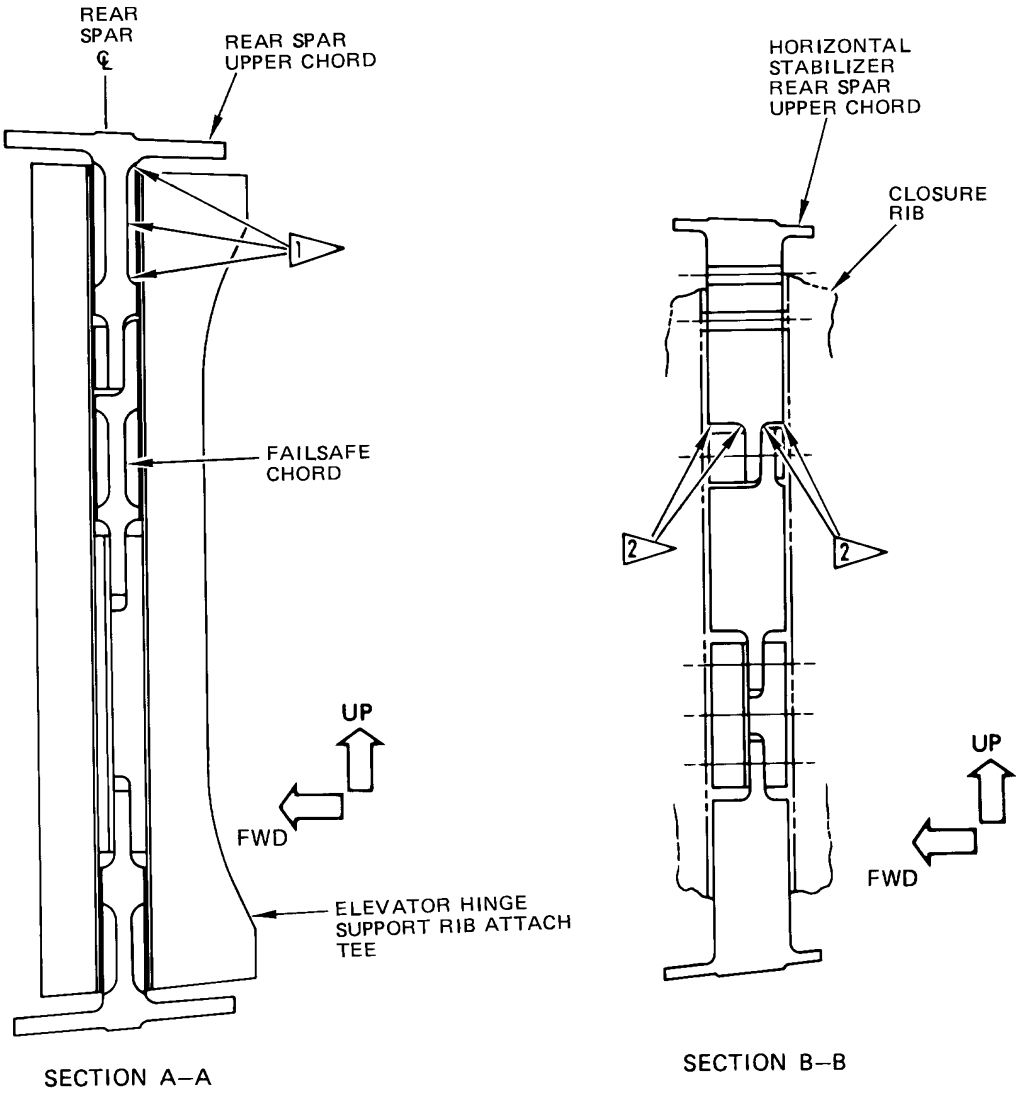

NOTES

- LEFT SIDE SHOWN, RIGHT SIDE OPPOSITE

1 PLACE PROBE ON AFT SIDE OF REAR SPAR UPPER CHORD AND SCAN AREA BEHIND ATTACH TEE PER

2 INSERT PROBE BETWEEN REAR SPAR UPPER AND FAILSAFE CHORDS FROM INBOARD (LUG) END AND SCAN UPPER CHORD RADIUS AND EDGES BEHIND CLOSURE RIB ON BOTH FORWARD AND AFT SIDES PER

2162223 S0000473035_V1

Horizontal Stabilizer Rear Spar Upper Chord - Stab Sta 68.14 and 83.50
Figure 1 (Sheet 2 of 2)

BOEING PROPRIETARY - Copyright © Unpublished Work - See title page for details

PART 6 - EDDY CURRENT

RIVET EDGE DISTANCE FOR CHEM-MILL POCKETS

1. Purpose

A. To get the edge distances of fasteners adjacent to the edge of the chem-mill pockets of the top and bottom skins of the horizontal stabilizer. The pockets are at SS 57.93 and SS 83.50 (see Figure 3 and Figure 4).

2. Equipment

A. Any eddy current instrument and probe combination that satisfies the performance requirements of this procedure is suitable for this inspection. The following equipment was used to develop this procedure.

(1) Instrument -- MIZ-10B; Zetec, Inc.

(2) Probe -- ULS-40; NDT Product Engineering, low frequency, non-shielded surface probe used at 8 kHz and capable of detecting 0.010 to 0.021 inch of metal thinning from an overall thickness of 0.060 to 0.071 inch of aluminum.

(3) Reference standard -- Two required. Refer to Figure 1.

(4) Tape -- Transparent tape 1.00 inch wide.

3. Prepare for the Inspection

A. Clean inspection area and remove loose paint.

4. Instrument Calibration

A. Do initial instrument adjustments.

(1) Set instrument frequency, if applicable, between 8.0 and 10.0 kHz.

(2) Put tape on reference standard as shown (see Figure 2). Use reference standard 358 for areas shown in views A and D (see Figure 3 and Figure 4). Use reference standard 359 for areas shown in views B and E (see Figure 3 and Figure 4).

(3) Put probe on the thick section of the reference standard (see Position 1 in Figure 2).

(4) Balance instrument. Refer to manufacturer's instructions.

(5) Adjust lift-off to obtain less than 5 percent of full scale needle movement when probe is slid from a 0.005-0.010 inch (0.013-0.025 cm) non-conductive shim, placed on the tape, to the tape on the reference standard (see Position 1 in Figure 2).

NOTE: One or two sheets of ordinary writing paper, approximately 0.003 inch (0.007 cm) thick each, can be used as the non-conductive shim.

(6) Adjust meter needle position control to get a baseline response of 20 percent of full scale (see Figure 2).

B. Do sensitivity adjustment.

(1) Put probe on the thin section of the reference standard (see Position 2 in Figure 2).

(2) Adjust sensitivity (gain control) to get an 80 percent of full scale needle deflection (60 percent above baseline when probe is on thin section) (see Figure 2).

(3) Check balance and especially lift-off. If adjustments are made, check sensitivity.

BOEING PROPRIETARY - Copyright © Unpublished Work - See title page for details

(4) Slide probe from Position 1 toward Position 2. When needle deflection reaches 50 percent, stop and mark end of probe trace on tape (see Figure 2).

(5) Slide probe from Position 2 toward Position 1. When needle deflection reaches 50 percent, stop and mark end of probe trace on tape.

(6) Check with edge of reference standard that the 50 percent value of Paragraph 4.B.(4) and Paragraph 4.B.(5) are at Position 3 (centered on the edge between the thick and thin sections).

(7) If probe does not center on the edge between the thick and thin sections repeat Paragraph 4.A. and Paragraph 4.B.

5. Inspection Procedure

A. Put tape on inspection surfaces as shown (see Figure 3 and Figure 4).

B. Calibrate instrument. Refer to Paragraph 4.

C. Put probe on the surface of taped skin, between fasteners, on the thick section away from chem-mill pocket edge (see Figure 3 and Figure 4). Check for a baseline response of 20 percent. If baseline response is not 20 percent, balance instrument again.

D. Put probe on the surface of the taped skin on the thin section (see Figure 3 and Figure 4). Check that the meter reading is 80 percent of full scale. If meter reading is not 80 percent, adjust sensitivity, balance and lift-off to get an 80 percent meter deflection (60 percent above baseline) using the taped skin as a reference standard.

E. Put probe back on the thick section of taped skin. Check baseline and balance if required. Slide probe toward chem-mill pocket (thin section). When meter deflection reads 50 percent of full scale (30 percent above baseline), stop, lift probe off tape and mark end of probe trace on tape (see View C of Figure 3 or View F of Figure 4).

F. Put probe on the taped thin section. Meter should read 80 percent (± 3 percent) of full scale. If meter does not read 80 percent of full scale, put probe on thick section and balance again. If meter does not read 80 percent after balance, do Paragraph 5.D. again.

G. Slide probe from thin section toward thick section. When meter deflection reads 50 percent of full scale, stop, lift probe off tape and mark end of probe trace on tape (see View C of Figure 3 or View F of Figure 4).

H. Repeat Paragraph 5.C., Paragraph 5.E., Paragraph 5.F., and Paragraph 5.G. at least twice at each tape location.

I. Make a line on the skin, between each piece of tape, that connects the marks obtained from Paragraph 5.C., Paragraph 5.E., Paragraph 5.F., and Paragraph 5.G. to show the chem-mill pocket edge.

6. Inspection Results

A. If the line in Paragraph 5.I. touches a fastener head, the chem-mill edge is too close to the fastener.

BOEING PROPRIETARY - Copyright © Unpublished Work - See title page for details

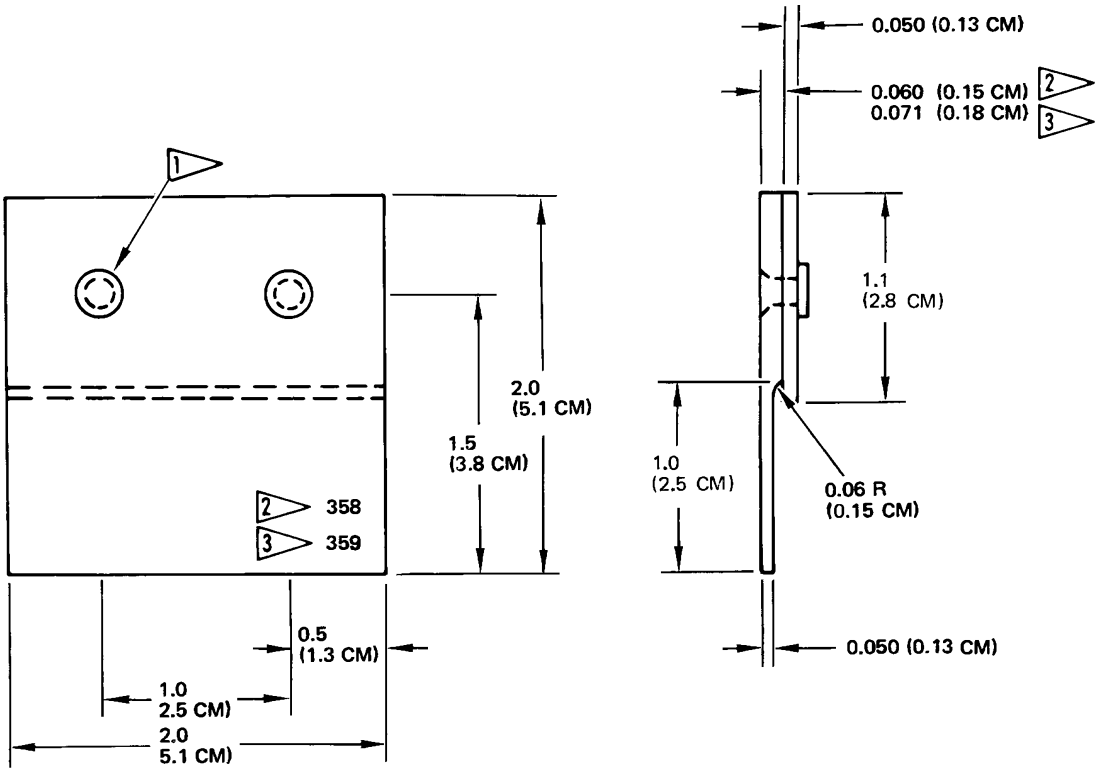

NOTES

- ALL DIMENSIONS ARE IN INCHES (CENTIMETERS IN PARENTHESES)
- TOLERANCE: X.X ± 0.05 (0.13 CM)
  X.XX ± 0.02 (0.05 CM)
  X.XXX ± 0.005 (0.013 CM)
- MATERIAL: 2024–T3 OR –T4 AL
- STEEL STAMP WITH 358 OR 359

1 BACR15CE5D5 RIVET (2 PLACES)

2 REFERENCE STANDARD 358 ONLY

3 REFERENCE STANDARD 359 ONLY

2162224 S0000473037_V1

Reference Standards 358 and 359
Figure 1

BOEING PROPRIETARY - Copyright © Unpublished Work - See title page for details

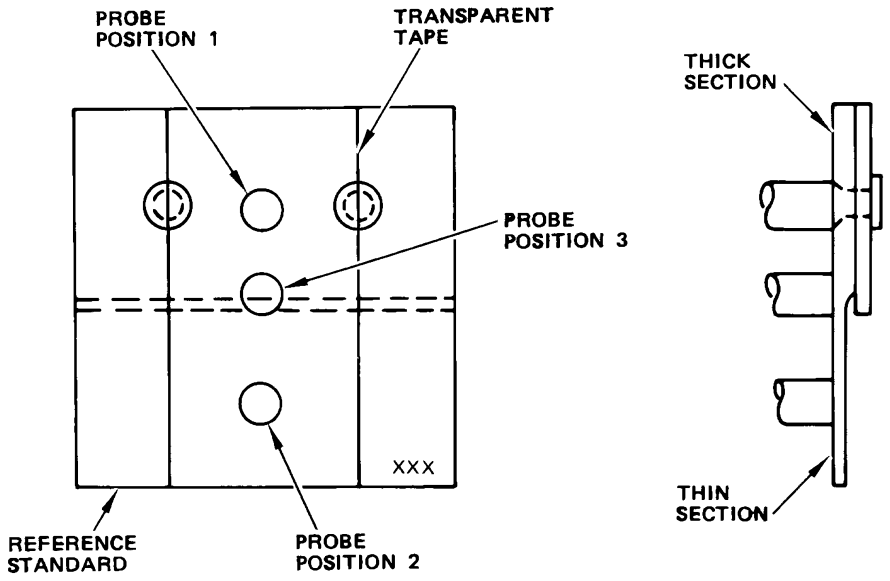

PROBE POSITIONS

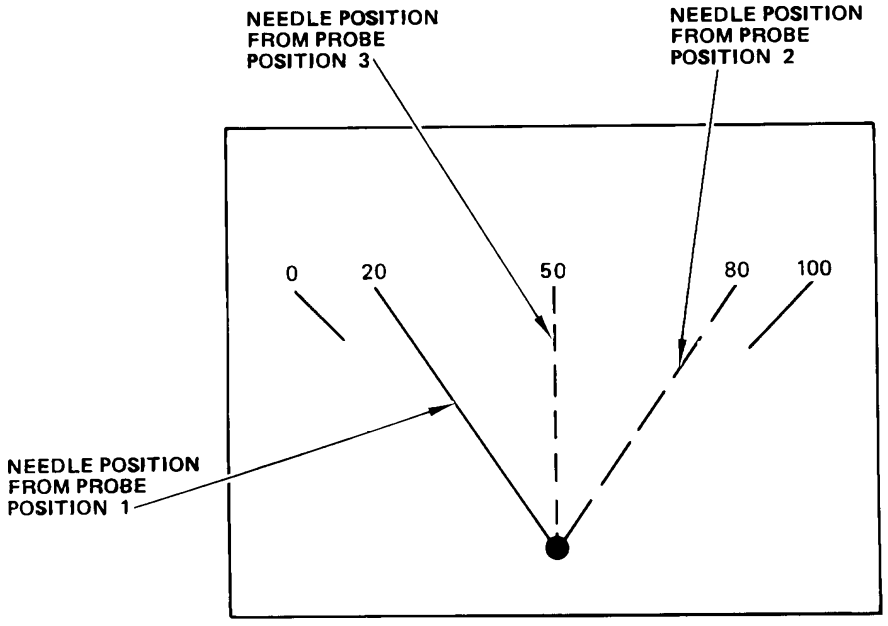

METER NEEDLE RESPONSE

2162230 S0000473038_V1

Instrument Calibration
Figure 2

BOEING PROPRIETARY - Copyright © Unpublished Work - See title page for details

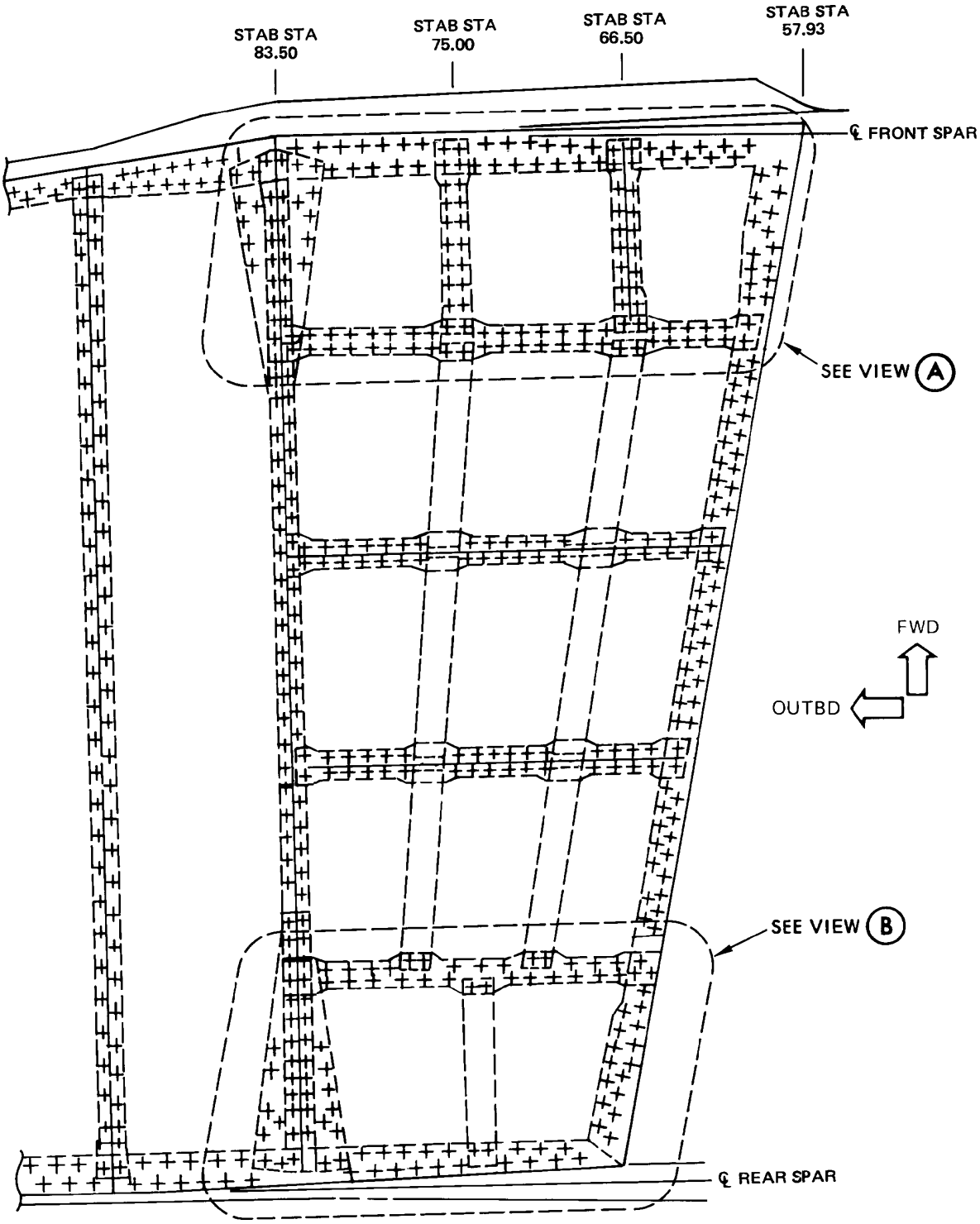

2162232 S0000473040_V1

Horizontal Stabilizer Top Skin
Figure 3 (Sheet 1 of 4)

BOEING PROPRIETARY - Copyright © Unpublished Work - See title page for details

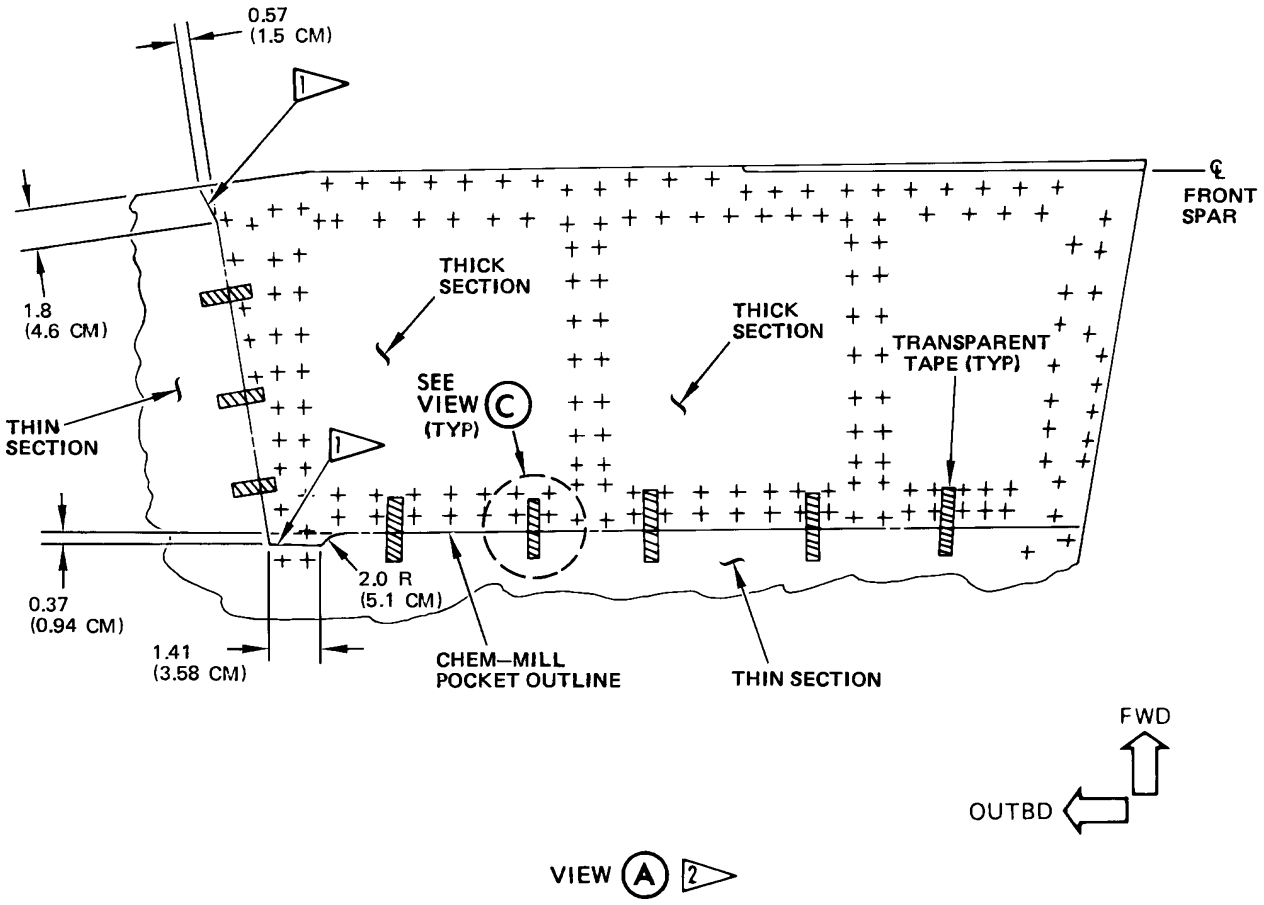

2162234 S0000473041_V1

Horizontal Stabilizer Top Skin
Figure 3 (Sheet 2 of 4)

BOEING PROPRIETARY - Copyright © Unpublished Work - See title page for details

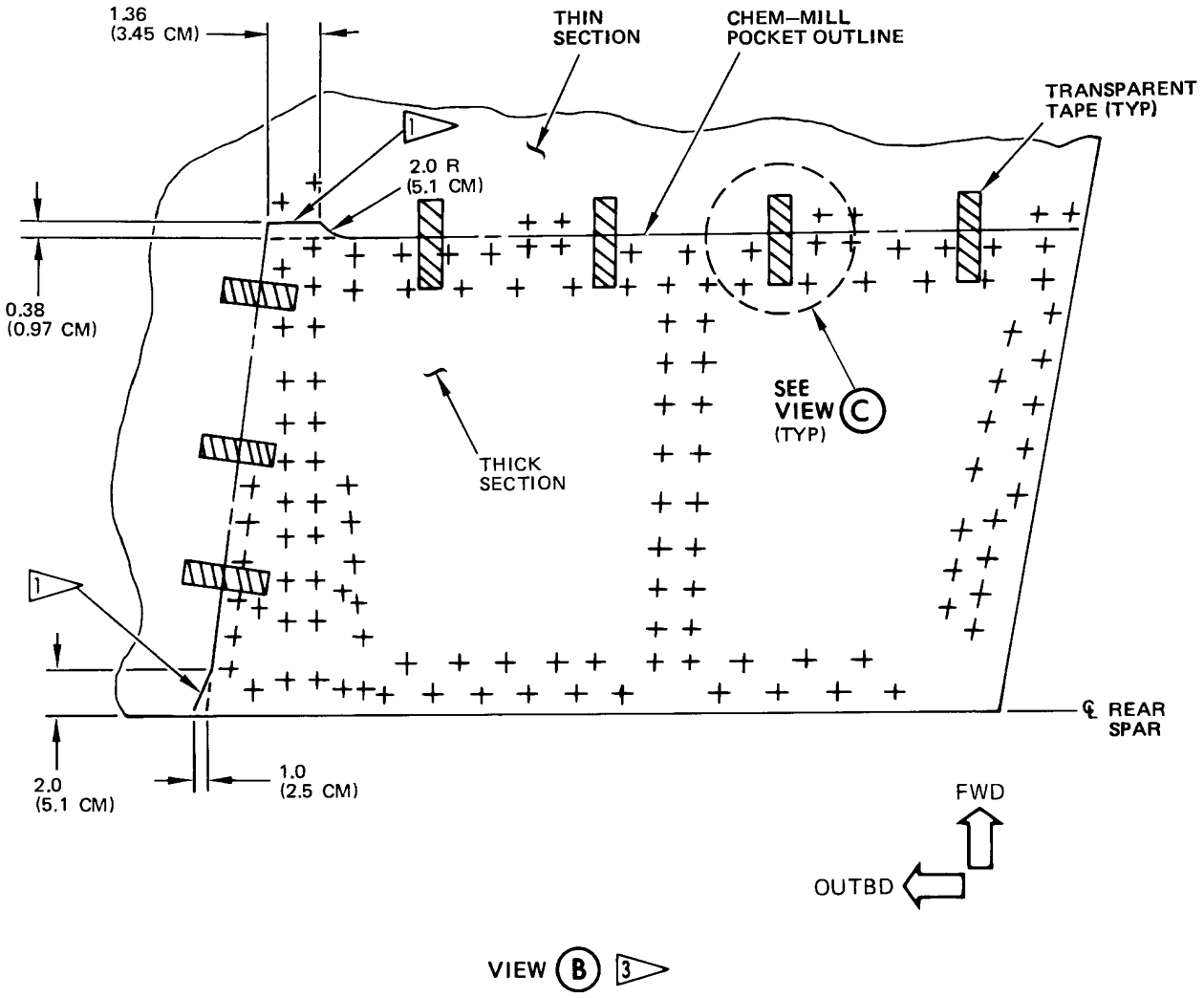

2162236 S0000473042_V1

Horizontal Stabilizer Top Skin
Figure 3 (Sheet 3 of 4)

BOEING PROPRIETARY - Copyright © Unpublished Work - See title page for details

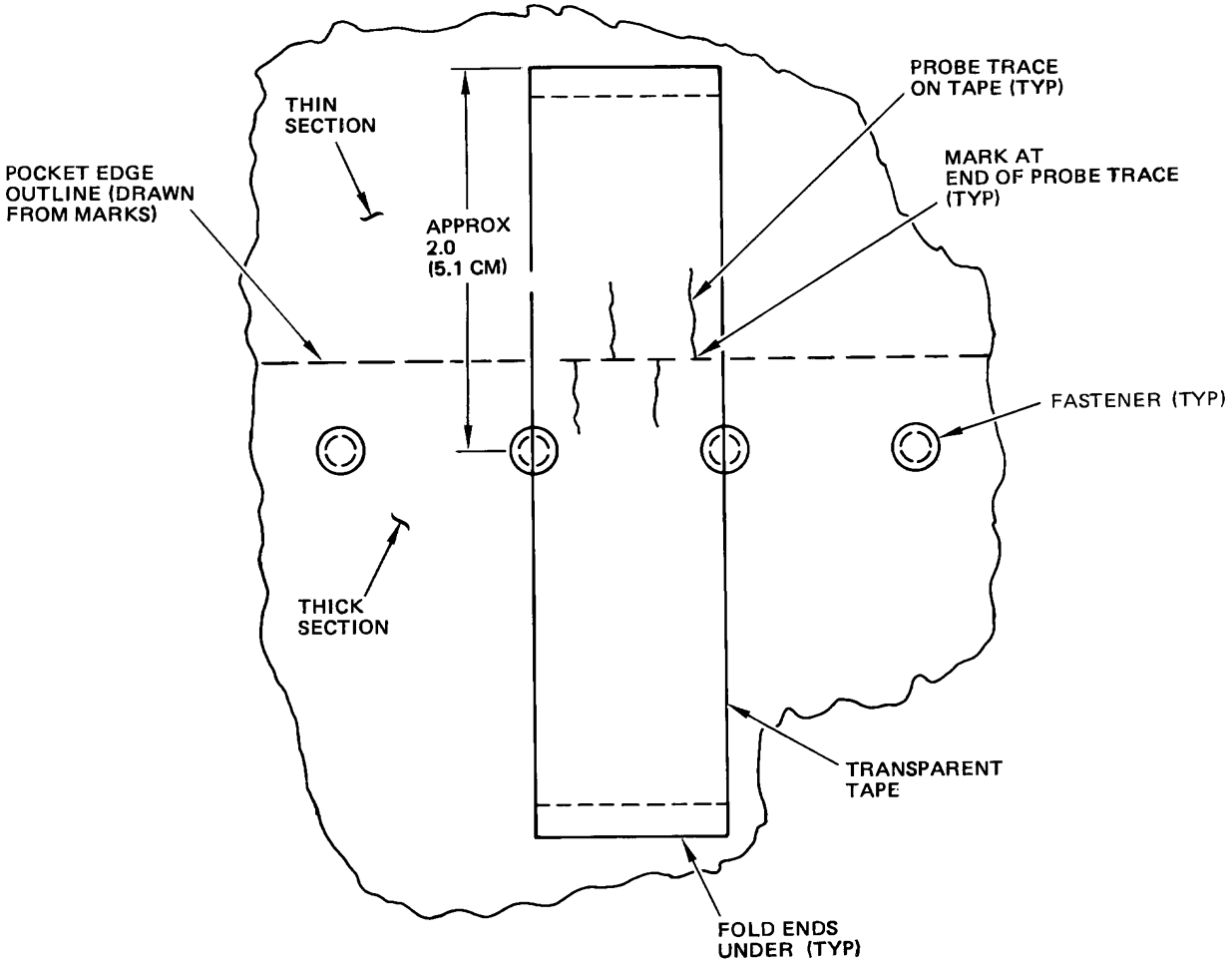

VIEW C
TYPICAL FOR ALL TAPE LOCATIONS

NOTES

- VIEWS LOOKING DOWN
- LEFT SIDE SHOWN, RIGHT SIDE SIMILAR
- ALL DIMENSIONS ARE IN INCHES (CENTIMETERS IN PARENTHESES)

1 TRUE POCKET EDGE OUTLINE – DETERMINE USING DIMENSIONS SHOWN

2 USE REFERENCE STANDARD 358 TO CALIBRATE FOR INSPECTING THIS LOCATION

3 USE REFERENCE STANDARD 359 TO CALIBRATE FOR INSPECTING THIS LOCATION

2162237 S0000473043_V1

Horizontal Stabilizer Top Skin
Figure 3 (Sheet 4 of 4)

BOEING PROPRIETARY - Copyright © Unpublished Work - See title page for details

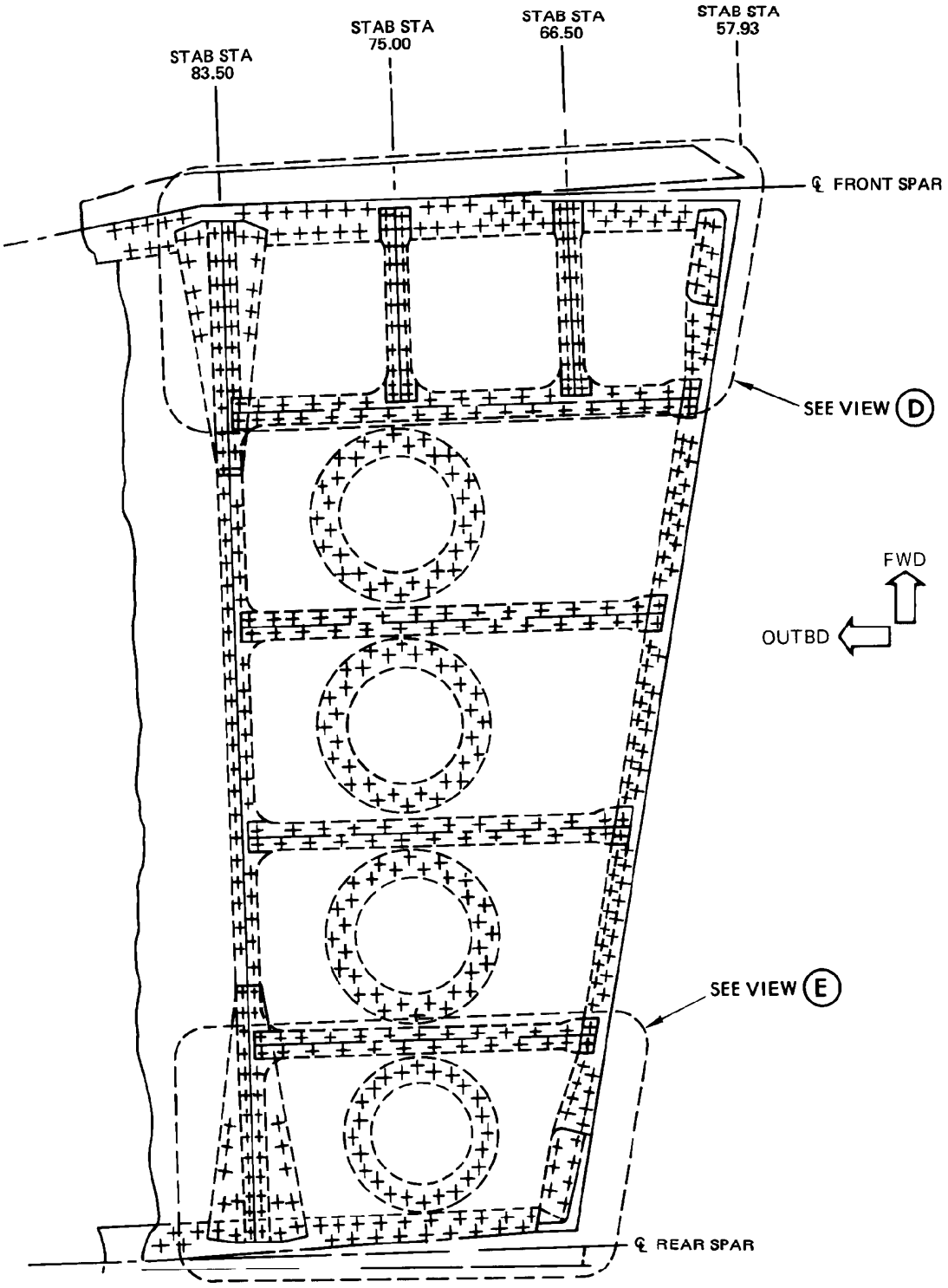

2162239 S0000473044_V1

Horizontal Stabilizer Bottom Skin
Figure 4 (Sheet 1 of 4)

BOEING PROPRIETARY - Copyright © Unpublished Work - See title page for details

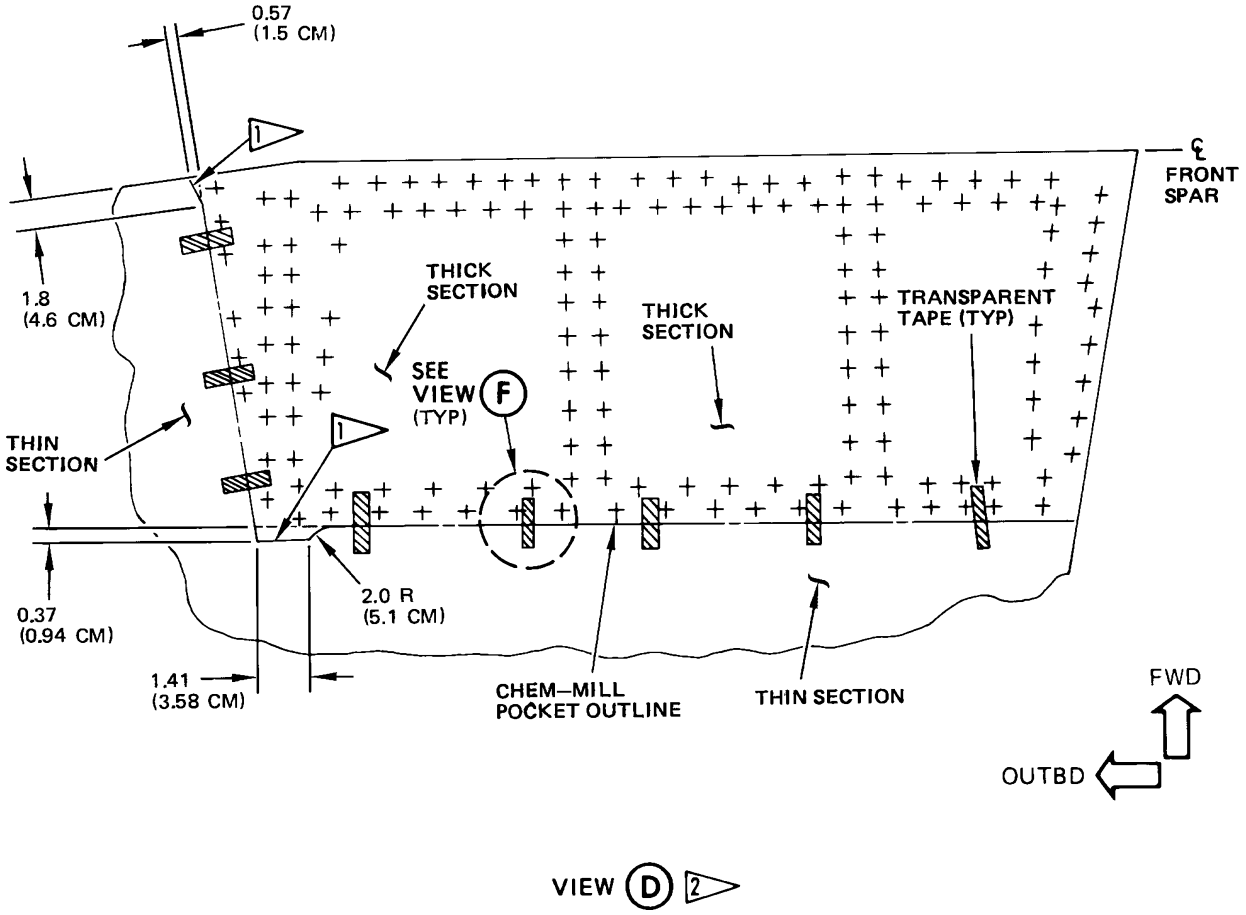

2162242 S0000473045_V1

Horizontal Stabilizer Bottom Skin
Figure 4 (Sheet 2 of 4)

BOEING PROPRIETARY - Copyright © Unpublished Work - See title page for details

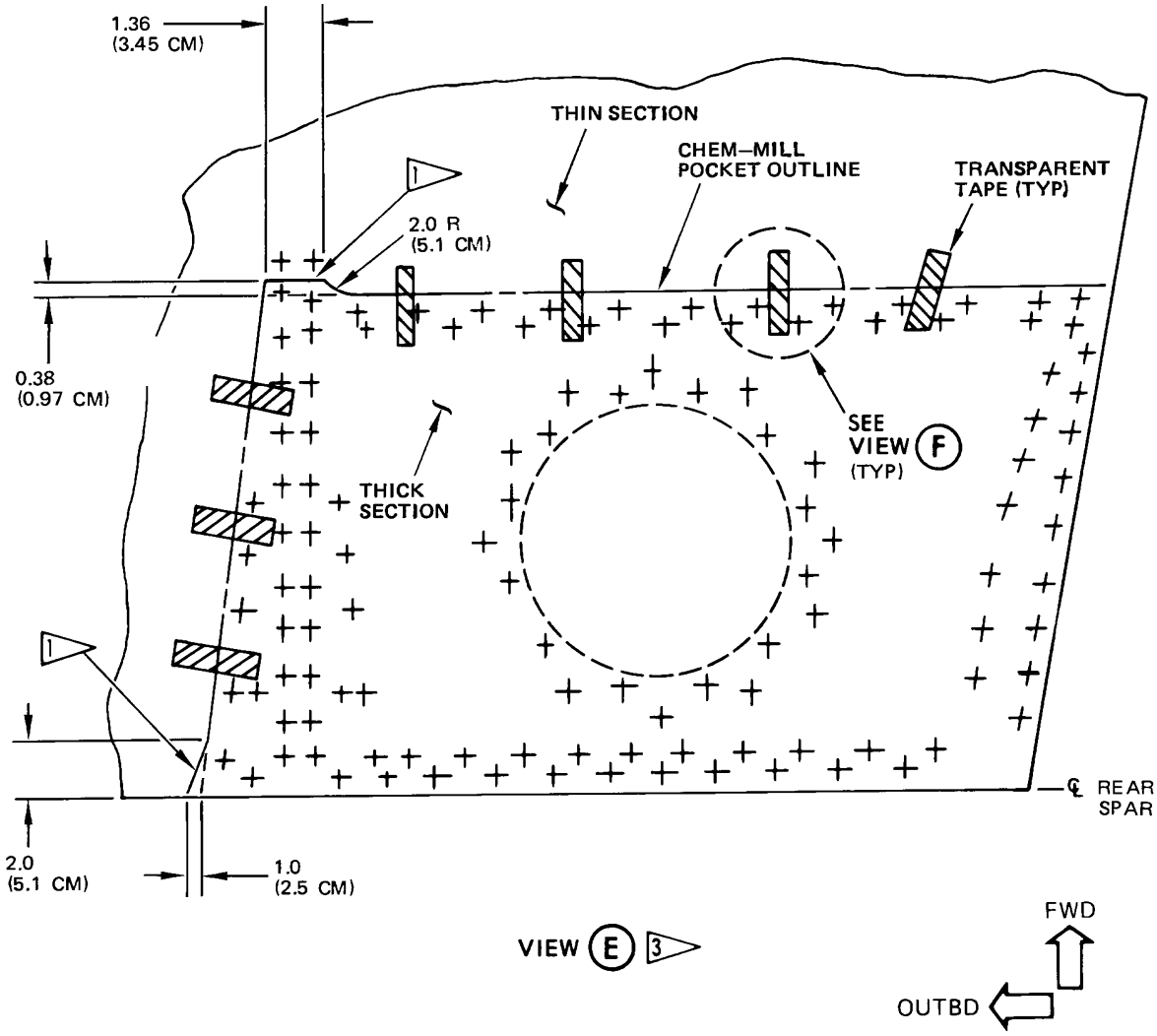

2162243 S0000473046_V1

Horizontal Stabilizer Bottom Skin
Figure 4 (Sheet 3 of 4)

BOEING PROPRIETARY - Copyright © Unpublished Work - See title page for details

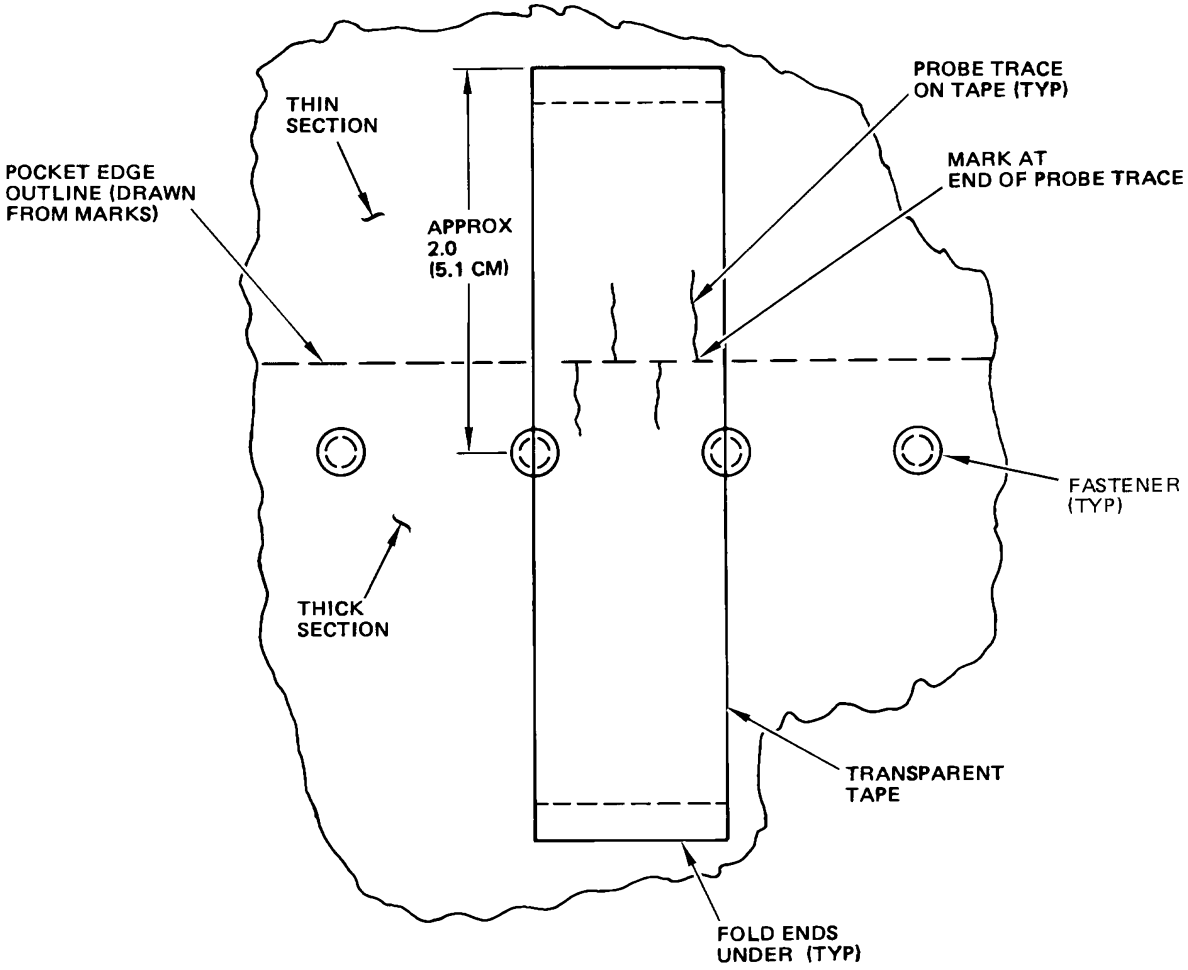

VIEW F
TYPICAL FOR ALL TAPE LOCATIONS

NOTES

- VIEWS LOOKING UP
- RIGHT SIDE SHOWN, LEFT SIDE SIMILAR
- ALL DIMENSIONS ARE IN INCHES (CENTIMETERS IN PARENTHESES)

1 TRUE POCKET EDGE OUTLINE – DETERMINE USING DIMENSIONS SHOWN

2 USE REFERENCE STANDARD 358 TO CALIBRATE FOR INSPECTING THIS LOCATION

3 USE REFERENCE STANDARD 359 TO CALIBRATE FOR INSPECTING THIS LOCATION

2162247 S0000473047_V1

Horizontal Stabilizer Bottom Skin
Figure 4 (Sheet 4 of 4)

BOEING PROPRIETARY - Copyright © Unpublished Work - See title page for details

PART 6 - EDDY CURRENT

HORIZONTAL STABILIZER - LOWER SKIN INSPECTION AT THE CHEM-MILL EDGE

1. Purpose

A. This subsurface eddy current inspection can be used to examine the lower skin of the horizontal stabilizer for cracks. The cracks can occur on the inner surface of the skin (not fully through the skin). The inspection is done on the outer surface of the skin. The inspection area is along the rear spar chord where the internal chem-mill edge is, between stabilizer stations 111 and 161. See Figure 1 for the inspection area.

B. The inspection is done with a subsurface eddy current probe and an impedance plane instrument. The probe scan is done perpendicular to the subsurface chem-mill edges. Internal cracks in the skin that are along the chem-mill edges can be found with this inspection procedure. See Figure 1.

C. Service Bulletin Reference: 737-55-1059

2. Equipment

NOTE: Refer to Part 1, 51-01-00, for data about the equipment manufacturers.

A. Instruments

(1) All eddy current instruments that have an impedance plane display are permitted if they:

(a) Can operate between frequencies of 12 kHz and 40 kHz. The frequency must be adjustable by increments of 1 kHz.

(b) Can find the reference notch in the reference standard as specified in the calibration instructions of this procedure.

(2) The instruments specified below were used to help prepare this procedure:

(a) NDT 19e; Nortec/Staveley

(b) Phasec 2200; Hocking/Krautkramer

B. Probes

(1) It is necessary to use a spot probe to do this inspection. The probe must operate at a frequency that is between 12 kHz and 40 kHz. The probe diameter must not be less than 0.30 inch (7.6 mm) and not more than 0.50 inch (12.7 mm).

(2) The spot probes that follow operated satisfactorily when this procedure was made. Other probes can be used if they can find the notch in the reference standard as specified in the calibration instructions of this procedure:

(a) SPO-5328; Nortec/Staveley (Reflection probe)

(b) SPO-5327; Nortec/Staveley (Reflection probe)

(c) SNG 0.375/31/25K; NDT Engineering (this probe has a spring loaded collar)

(d) NEC1005; NDT Engineering (Reflection probe)

(e) SPO-5329; Nortec/Staveley (Reflection probe)

NOTE: For smaller diameter probes, a collar attached around the probe will make the probe scan more stable. If a collar is used, it must be adjusted so that the probe satisfactorily touches the airplane skin. Also, during the inspection, make sure the increments between each probe scan are the diameter of the probe and not the outer diameter of the collar.

C. Reference Standard

BOEING PROPRIETARY - Copyright © Unpublished Work - See title page for details

(1) Make Reference Standard NDT396 as specified in Figure 2.

3. **Prepare for the Inspection**

A. Prepare for the subsurface inspection of the skin as follows:

(1) Make sure that the instrument, probe, reference standard and inspection areas are at the same temperature.

(2) Make sure the lower skin of the elevator is clean and has no rough paint in the inspection areas.

(3) Teflon tape not more than 0.004 inch (0.10 mm) thick on the end of the probe will make it easier to do the scans, but it is not necessary. The probe can possibly scratch the airplane if the scans are done without Teflon tape on the probe. If you make a decision to use the Teflon tape on the probe, make sure it is put on the probe before the calibration.

4. **Instrument Calibration**

NOTE: Refer to the equipment instruction manual as necessary for operation instructions.

NOTE: If the skin is painted, put approximately 0.006 inch (0.15 mm) of transparent, nonconductive tape on the reference standard before calibration.

A. Set the instrument frequency to 26 kHz.

NOTE: The frequency for the calibration could possibly be higher or lower than 26 kHz. Start with 26 kHz and, if necessary, adjust the frequency up or down as shown in Figure 3.

NOTE: The high pass (HP) filter must be set to off (0 Hz). The low pass filter (LP) must be set to the minimum value that does not decrease the amplitude of the signals at normal scan speeds. If the low pass filter is too low, and the scan speed is increased during the inspection, it is possible to not see a crack indication.

B. Put the probe at position 1 (double layer) on reference standard NDT396. See Detail A in Figure 3.

C. Balance the instrument.

D. Adjust the position of the balanced signal so that it is at 30 percent of full screen height.

NOTE: The vertical gain must be approximately 14 to 20 dB higher than the horizontal gain.

E. Set lift-off so that the signal moves (approximately) in a horizontal direction to the left. See Detail B in Figure 3.

F. Do a probe scan away from the reference notch so that the probe goes across the second layer edge. Monitor the signal on the screen and stop the probe when it is on the single layer. See Detail A, probe position 1 and 2 and Detail B in Figure 3.

G. If the end point of the single layer signal is higher than the balance point of the double layer signal, increase the frequency and adjust the phase to get the signals to look equivalent to Detail B in Figure 3. See Details A, B, and E in Figure 3.

H. If the end point of the single layer signal is lower than the balance point of the double layer signal, decrease the frequency and adjust the phase to get the signals to look equivalent to Detail B in Figure 3. See Details A, B, and D in Figure 3.

I. Do a probe scan as in Paragraph 4.F. and monitor the signal on the display. Make sure there is less than a 5 percent of full screen height difference between the balance point of the double layer signal and the end point of the single layer signal.

BOEING PROPRIETARY - Copyright © Unpublished Work - See title page for details

J. If necessary, continue to adjust the frequency and lift-off angle so that the balance point of the double layer signal and the end point of the single layer signal are almost equivalent to the signals shown in Detail B of Figure 3.

K. Put the probe at position 3 and do a minimum of three probe scans across the reference notch and monitor the notch signal (probe position 3 to 4 and back). See Detail A and C in Figure 3.

L. Adjust the gain so that the signal from the reference standard notch is 30 percent of full screen height above the balance point as shown in Detail C of Figure 3.

M. Make sure the lift-off is horizontal and to the left.

N. Do a scan across the notch and make a small increase in the scan speed to see if the signal from the notch decreases. If the notch signal decreases, increase the setting for the low pass filter a small quantity.

5. Inspection Procedure

A. Calibrate the instrument as specified in Paragraph 4.

B. Put the probe on the skin in the inspection area that is immediately aft of the chem-mill edge. This is where the skin is 0.050 inch (1.27 mm) thick.

C. Balance the instrument and make sure lift-off goes horizontally to the left as shown in Detail B of Figure 3.

CAUTION: DO NOT CHANGE THE GAIN ADJUSTMENT THAT WAS SET DURING THE CALIBRATION. IF THE GAIN IS CHANGED DURING THE INSPECTION, THIS WILL MAKE THE INSPECTION UNSATISFACTORY.

D. Do approximately 4 scans so that the probe moves across the subsurface edge of the chem-milled area. During the scan:

(1) Make sure the scan direction is perpendicular to the chem-milled subsurface edge as it moves across the subsurface edge.

(2) Monitor the subsurface edge signal as the probe goes from the thicker 0.050 inch (1.27 mm) to the thinner 0.040 inch (1.01 mm) skin. Make sure the signal looks almost the same as the signal shown in Detail B of Figure 3.

(a) If necessary, adjust the frequency and lift-off to get the single layer signal and the double layer signal at the same screen height, or almost the same screen height, as the signal shown in Detail B of Figure 3. Refer to Details B, D, and E in Figure 3 to help make the signal equivalent to the signal shown in Detail B.

(b) Monitor the display for signals that are almost equivalent to the EDM notch signal shown in Detail C of Figure 3.

(c) Make sure each probe scan is one probe diameter or less from each other.

NOTE: If a collar is used, make sure each probe scan is the diameter of the probe and not the diameter of the collar.

E. Continue to do a probe scans as specified in Paragraph 5.D. across the subsurface chem-mill edges until the inspection area identified in Figure 1 has been examined. Make sure the signals from the subsurface edges occur on the display for each probe scan as shown in Detail B of Figure 3.

F. Examine the other elevator skin for cracks as specified in Paragraph 5.B. thru Paragraph 5.E.

BOEING PROPRIETARY - Copyright © Unpublished Work - See title page for details

6. **Inspection Results**

A. All signals that are almost the same as the notch signal from the reference standard are crack indications. Also, signals that are 15 percent of full screen height or more above the balance point are crack indications. See Detail C in Figure 3 for the reject level.

B. Refer to Service Bulletin 737-55-1059 and Structural Item Interim Advisory 737-250 for more instructions about what to do at crack locations.

BOEING PROPRIETARY - Copyright © Unpublished Work - See title page for details

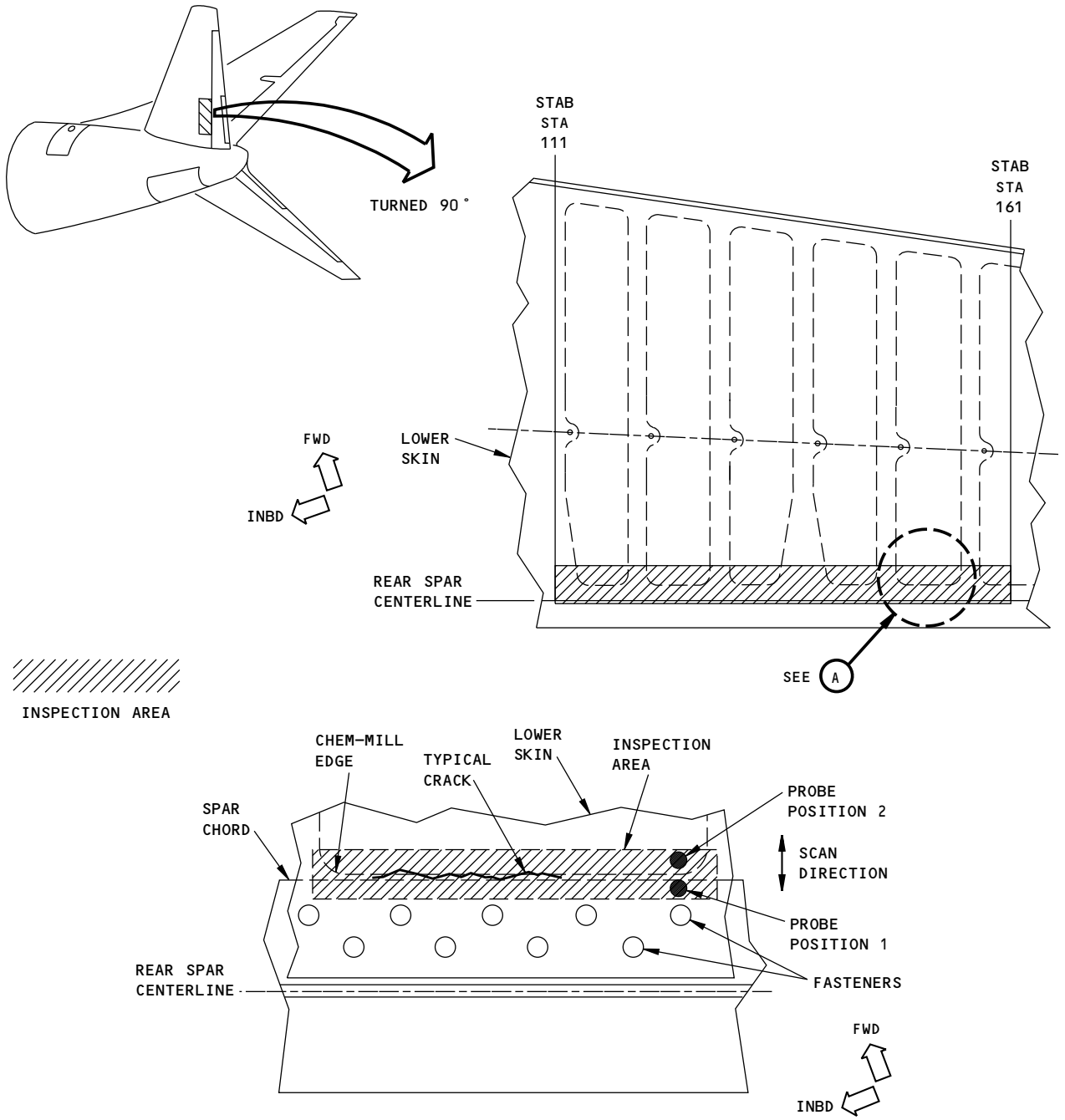

2162253 S0000473050_V1

External Inspection Areas on the Lower Skin of the Horizontal Stabilizer
Figure 1

BOEING PROPRIETARY - Copyright © Unpublished Work - See title page for details

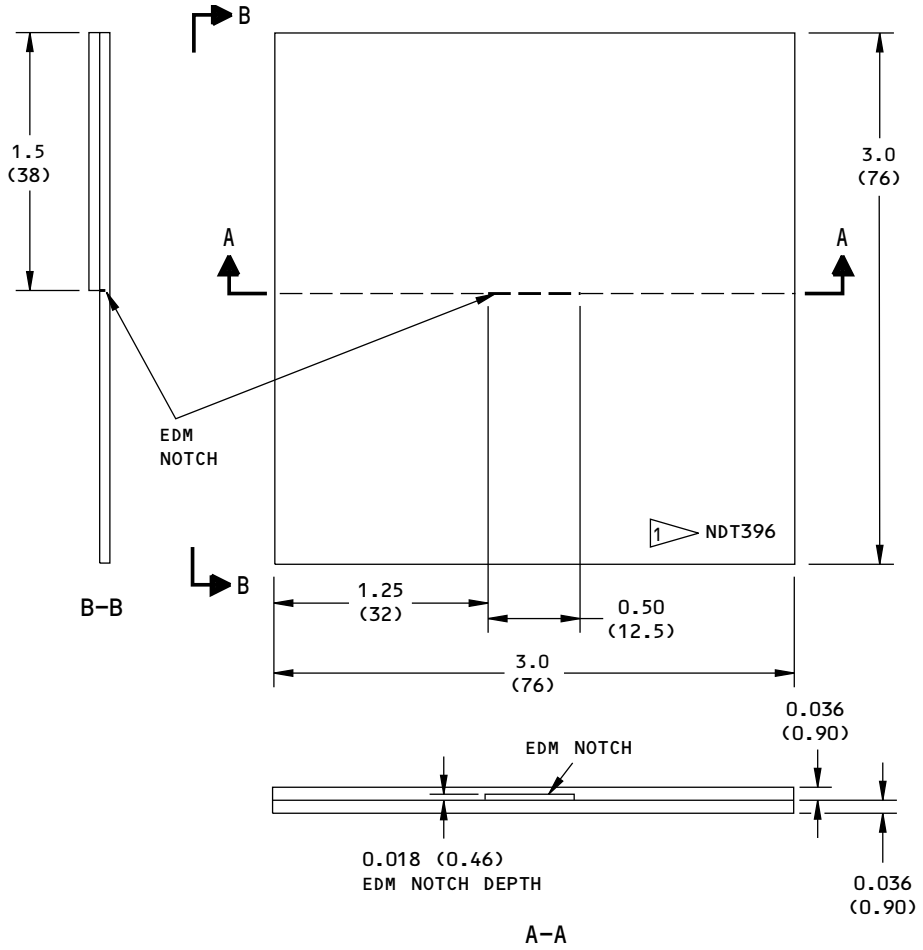

NOTES:

- ALL DIMENSIONS ARE IN INCHES (MILLIMETERS IN PARENTHESES)
- DIMENSION TOLERANCE (UNLESS SPECIFIED DIFFERENTLY):

INCHES	MILLIMETERS
X.XXX = ±0.005	X.XX = ±0.1
X.XX = ±0.025	X.X = ±0.5
X.X = ±0.050	X = ±1

- MATERIAL: 2024-T3 CLAD (TWO SKINS)
- APPLY ADHESIVE OR EPOXY NO MORE THAN 0.005 (0.13) THICK TO SKINS AND CLAMP TOGETHER.
- MAKE SURE THE 2ND LAYER EDGE IS IMMEDIATELY ABOVE THE EDM NOTCH BEFORE THE CLAMPS ARE APPLIED.
- EDGE OF SKIN TO NOTCH TOLERANCE: 0.010 (0.2)
- EDM NOTCH: LENGTH 0.50 (12.5)
  DEPTH 0.018 (0.46) ±0.002 (0.05)
  WIDTH 0.007 (0.18)

1 STAMP OR ETCH NDT396

2162254 S0000473051_V1

Reference Standard NDT396
Figure 2

BOEING PROPRIETARY - Copyright © Unpublished Work - See title page for details

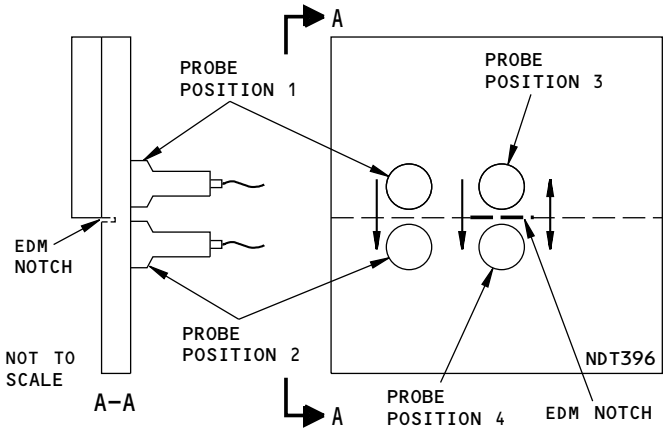

CALIBRATION PROBE POSITIONS FOR INSPECTION OF SUBSURFACE CRACKS IN THE SKIN

DETAIL A

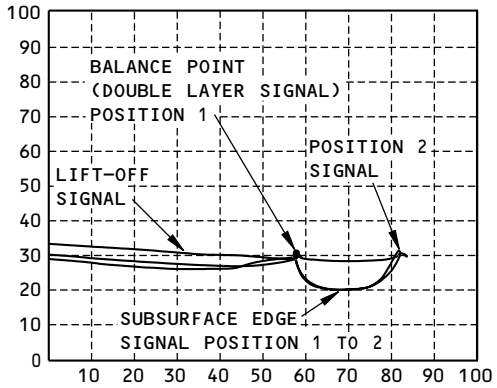

DETAIL B

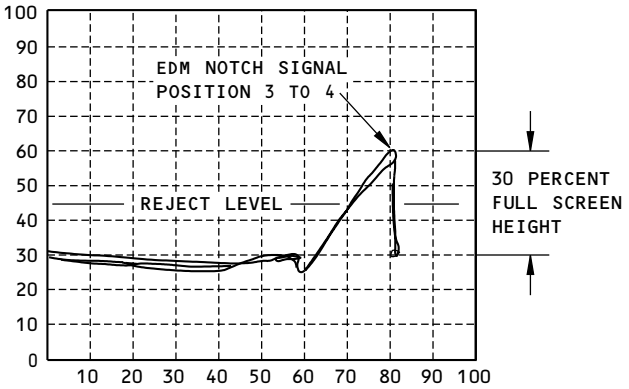

DETAIL C

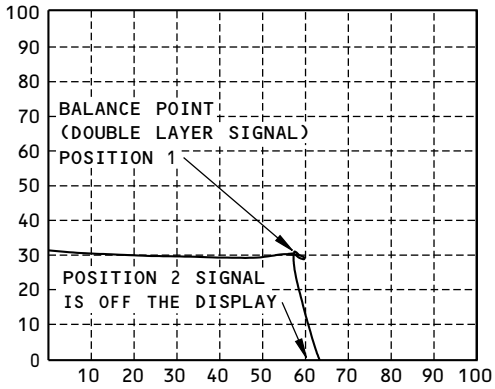

DETAIL D

HERE THE FREQUENCY IS TOO HIGH. DECREASE THE FREQUENCY UNTIL THE POSITION 1 AND 2 SIGNALS LOOK EQUIVALENT TO THE SIGNALS SHOWN IN DETAIL B

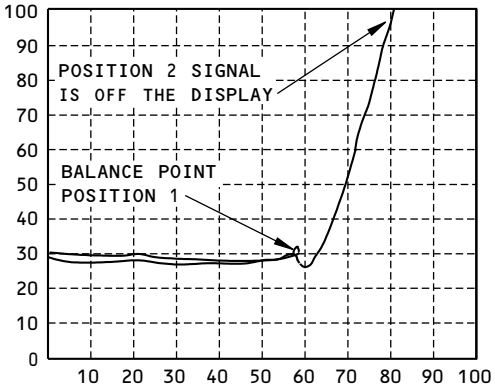

DETAIL E

HERE THE FREQUENCY IS TOO LOW. INCREASE THE FREQUENCY UNTIL THE POSITION 1 AND 2 SIGNALS LOOK EQUIVALENT TO THE SIGNALS SHOWN IN DETAIL B

NOTES:

- SET THE VERTICAL GAIN SO IT IS 14 TO 20 dB HIGHER THAN THE HORIZONTAL GAIN.
- SET THE FREQUENCY (BETWEEN 23 KHZ AND 40 KHZ) SO THAT THE DIFFERENCE BETWEEN THE DOUBLE LAYER SIGNAL (POSITION 1) AND THE SINGLE LAYER SIGNAL (POSITION 2) IS LESS THAN 5 PERCENT OF FULL SCREEN HEIGHT. SEE DETAILS A AND B.
- SEE DETAILS A, B, D AND E TO SEE HOW TO ADJUST THE FREQUENCY AND PHASE TO DO THE CALIBRATION.
- ADJUST THE GAIN SO THAT THE NOTCH SIGNAL GOES TO 30 PERCENT OF FULL SCREEN HEIGHT ABOVE THE BALANCE POINT. SEE DETAILS A AND C.

2162255 S0000473052_V1

Calibration Positions with Impedance Plane Signals
Figure 3

BOEING PROPRIETARY - Copyright © Unpublished Work - See title page for details

PART 6 - EDDY CURRENT

MAGNETO OPTIC IMAGER (MOI) INSPECTION OF CRACKS IN THE LOWER SKIN OF THE HORIZONTAL STABILIZER

1. Purpose

A. Use this procedure to find cracks in the lower skin of the horizontal stabilizer. The cracks that can be found with this procedure are at the internal chem-mill edges along the rear spar. This procedure is done from the external surface, between Stabilizer Station 111 and 161. See Figure 1.

B. This procedure uses a Magneto Optic Imager (MOI).

C. We recommend that only inspectors who are trained with the MOI instrument do this procedure.

D. Service Bulletin Reference: 737-55-1059

2. Equipment

A. Use a Magneto Optic Imaging System, Model 303 or 308, which is made by Physical Research Instruments, Inc., with the equipment components that follow:

NOTE: The Photos in Figure 3 are from a model 303 imager head. A model 307 imager head could be used for this inspection, but the image display will be smaller.

(1) Power supply control unit

(2) Video monitor or heads-up display set

(3) Video recorder

NOTE: The video recorder is necessary only to record the inspection results.

(4) Imager head (model 303 or 307)

(5) Five-inch (125 mm) wide tape for protection of the imager head.

B. Reference Standard

(1) Use reference standard NDT3036 as specified in Figure 2. See Figure 2 for a drawing of the reference standard.

3. Prepare for the Inspection

A. Identify the inspection location on the lower skin of the horizontal stabilizer, between stabilizer station 111 and 161 along the rear spar.

B. Make sure the surface of the skin is clean in the inspection area. See Figure 1.

BOEING PROPRIETARY - Copyright © Unpublished Work - See title page for details

4. **Instrument Calibration**

CAUTION: THE EARTH'S MAGNETIC FIELD HAS AN EFFECT ON THE IMAGER. WHEN YOU CHANGE THE POSITION OF THE IMAGER HEAD, IT CAN BE NECESSARY TO ADJUST THE BIAS CONTROL. THUS, YOU MUST DO THE CALIBRATION WITH THE REFERENCE STANDARD IN THE SAME POSITION AS THE INSPECTION SURFACE. FOR EXAMPLE, THE LOWER SKIN OF THE HORIZONTAL STABILIZER IS IN A HORIZONTAL DIRECTION, THUS, THE REFERENCE STANDARD MUST BE IN A HORIZONTAL DIRECTION DURING THE CALIBRATION.

ALSO, STEEL STRUCTURE NEAR THE INSPECTION AREA WILL HAVE AN EFFECT ON THE IMAGE QUALITY OF THE INSTRUMENT. IF IT IS NECESSARY TO ADJUST THE BIAS CONTROL TO IMPROVE THE IMAGE, CALIBRATE AGAIN WITH THE REFERENCE STANDARD IN THE SAME LOCATION AND POSITION AS THE INSPECTION SURFACE. SEE THE CALIBRATION INSTRUCTIONS.

A. Connect the different components of the instrument. Refer to the manufacturer's instructions.

B. Supply power to the instrument control unit and external monitor.

C. Set the excitation mode to "rotate".

D. Set the instrument at 3 kHz or 5 kHz. You can use one of the two frequencies that gives the best results on the reference standard.

E. Set the excitation level to "high".

CAUTION: DO NOT DO THE CALIBRATION WHEN THE REFERENCE STANDARD IS ON A METAL SURFACE. YOU WILL GET AN INCORRECT CALIBRATION BECAUSE OF THE EFFECTS OF THE METAL.

F. Put reference standard NDT3036 on a wood bench or other non-metal surface.

G. Put the MOI imager head tightly against the surface of reference standard NDT3036. See calibration position A in Detail I of Figure 3.

H. Adjust the MOI bias control with the buttons on the imager handle until you see a dark line against a bright background. The dark line shows the sub-surface chem-mill edge. See Detail I in Figure 3.

I. Adjust the bias control again until the dark line begins to go out of view. Then adjust the bias control in the opposite direction until the line just begins to come into view again. This is the correct adjustment point. The dark line must be narrow and clear, not wide and fuzzy.

J. Put the imager head with the center of the imager on the EDM notch at calibration position B. See Detail II in Figure 3.

NOTE: When the chem-mill edge shows in the middle of the display, the top edges of the rivets show at the bottom of the display. See Figure 3.

NOTE: If conversion coated rivets were put in the reference standard, the rivet signals can look weak in the display. The weak rivet signals are permitted because the inspection area is not at rivet locations. Anodized rivets will show darker in the display.

K. Look for a dark line that identifies the chem-mill edge with a dark bulge that identifies the end of the notch. There can also be a light area at the other end of the notch. Move the imager from side to side. The indication will move from side to side in the image display. See Detail II in Figure 3.

BOEING PROPRIETARY - Copyright © Unpublished Work - See title page for details

L. Make a note of the display.

NOTE: Do not adjust the bias control after this step. You will make more adjustments only when you are on the airplane.

M. Hold the reference standard against the imager head and turn them until they are in an overhead position. Monitor the change in the display while you do this. The change in the display is caused by the earth's magnetic field.

N. Set up the instrument and reference standard on the airplane, in the inspection area shown in Figure 1.

O. Put the reference standard adjacent to the inspection surface, in the same position as the surface you will examine (overhead). Do not put the reference standard on the horizontal stabilizer skin or you will get an incorrect calibration because of the effects of the skin. See Figure 1.

P. Put the MOI imager head against the surface of the reference standard, with the center of the imager on the EDM notch at calibration position B. See Detail II in Figure 3.

Q. Adjust the MOI bias control again to get the best image quality on the EDM notch when the reference standard is in the same position as the surface to be examined. Adjust the bias control until the image looks the same as it did when you calibrated on a bench. The image must look almost the same as the images in Detail II of Figure 3.

5. Inspection Procedure

A. Calibrate as specified in Paragraph 4.

B. Make a scan of the inspection area so the chem-mill edge is seen between the middle and the bottom of the viewer. During the scan:

NOTE: It is optional to adjust the imager position so that the rivets are seen at the bottom of the imager display. With the upper row of rivets seen in the viewer, the chem-mill edge will be seen higher in the imager display. See Figure 3.

(1) Monitor the MOI viewer for:

(a) Dark bulges or gaps in the doubler edge signal.

(b) Images that look almost the same as the images of the EDM notch from the reference standard.

(c) A change in the chem-mill edge signal.

(2) The scan rate must be slow to identify cracks. Do not do a scan faster than 1 inch (25 mm) for each second.

(3) The image quality can change while you move down the stabilizer skin because of the magnetic properties of the building or equipment near the inspection area. If the display changes, calibrate the equipment again as specified in Paragraph 4.O. thru Paragraph 4.Q. with the reference standard adjacent to the inspection area.

(4) All chem-mill edges in the inspection area that can not be examined with MOI must be examined with a different NDT procedure. The conditions that follow prevent inspection with MOI:

(a) Protruding head fasteners in the inspection area. If there are protruding head fasteners in the inspection area, use inspection procedure Part 6, 55-10-07.

(b) Doublers, repairs or other structure that interfere with the inspection.

(c) A concave surface in the inspection area.

(d) Surface corrosion in the inspection area. Remove surface corrosion to do the inspection.

BOEING PROPRIETARY - Copyright © Unpublished Work - See title page for details

(5) Temperature can have an effect on the performance of the MOI. Temperature can cause the image quality (contrast) to decrease. Monitor these conditions during the inspection:

(a) Imager head temperature build-up. During use, the imager head becomes warm. A good procedure is to turn the imager head off when you are not doing the inspection.

(b) High air temperature. High imager head temperatures become more of a problem when the air temperature is 90 degrees F (32 degrees C) or higher. If the air temperatures are too high, do the inspection when the air temperature is lower.

(c) High aircraft skin temperature. Do not do the inspection if sunlight makes the surface of the airplane too hot. Do a check of the reference standard with the reference standard at the same temperature as the skin to make sure there is sufficient sensitivity.

(6) Areas that cause images that look almost the same as the images of the defects from the reference standard, or images that are unusual, must be examined more. Refer to Paragraph 6.

6. Inspection Results

A. These signals are indications of a crack:

(1) A small bulge along the chem-mill edge signal. When you move the imager from side to side, the bulge will move from side to side in the image.

(2) Two small bulges along the chem-mill edge signal. Long cracks can have two bulges, one at each end of the crack. Or they can have a bulge at one end and a gap at the other end. When you move the imager from side to side, these indications will move from side to side in the image. See Detail II in Figure 3.

(3) A very large, dark bulge along the chem-mill edge signal. Large cracks that have broken or have almost broken the skin will cause very large signals.

B. Do a check of all crack indications. Use the mid frequency spot probe procedure, Part 6, 55-10-07, to get more data about the crack indications.

BOEING PROPRIETARY - Copyright © Unpublished Work - See title page for details

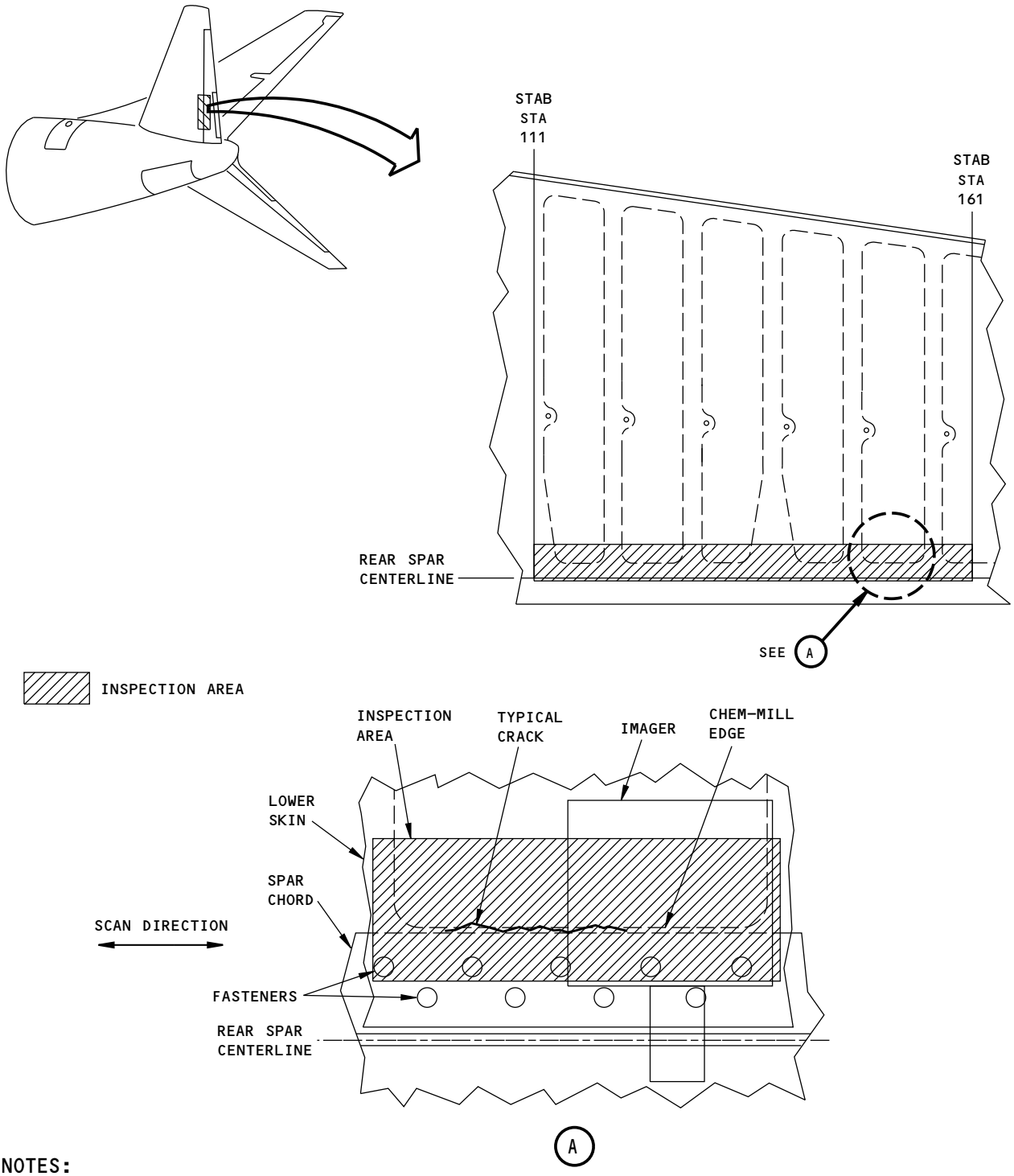

NOTES:

- THIS VIEW IS AS YOU LOOK UP AT THE LOWER SKIN OF THE HORIZONTAL STABILIZER

2162256 S0000473056_V1

External Inspection Areas on the Lower Skin of the Horizontal Stabilizer
Figure 1

BOEING PROPRIETARY - Copyright © Unpublished Work - See title page for details

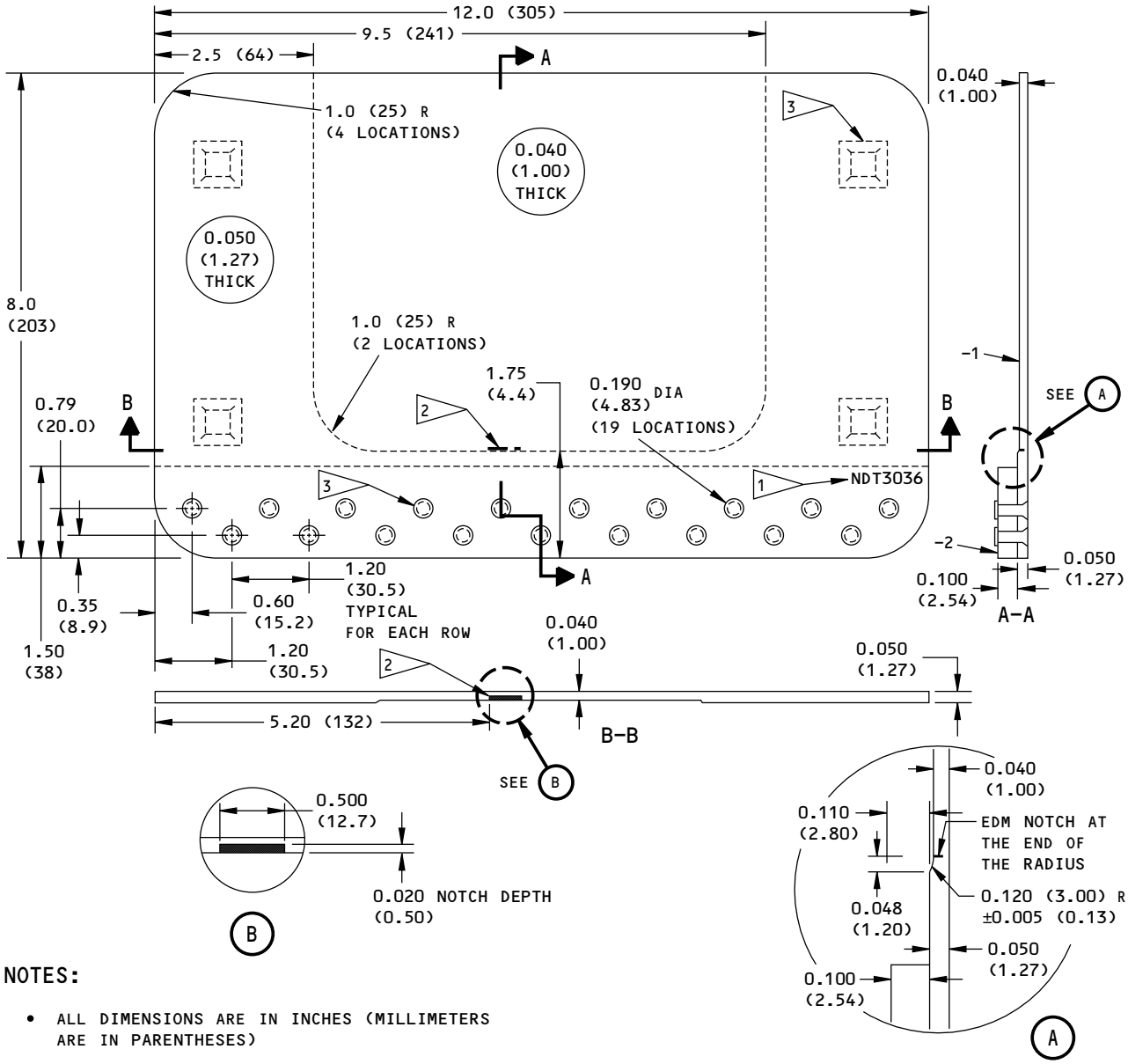

NOTES:

- ALL DIMENSIONS ARE IN INCHES (MILLIMETERS ARE IN PARENTHESES)
- TOLERANCE (UNLESS SPECIFIED DIFFERENTLY):

INCHES	MILLIMETERS
X.XXX = ± 0.003	X.XX = ± 0.08
X.XX = ± 0.025	X.X = ± 0.5
X.X = ± 0.050	X = ± 1

- MATERIAL: EACH LAYER IS ALUMINUM, 2024-T3, CLAD OR BARE
  - -1 0.050 (1.27) THICK (MACHINED TO 0.040 (1.00) WHERE SHOWN).
  - -2 0.100 (2.54) THICK
- RIVETS: QUANTITY 19 BACR15CE6D6 OR BACR15GF6D6

1. ETCH OR STEEL STAMP THE REFERENCE STANDARD NUMBER NDT3036
2. EDM NOTCH DIMENSIONS AND TOLERANCES:
   WIDTH: 0.007 (0.17) MAXIMUM
   LENGTH: 0.500 (12.7)
   DEPTH: 50 PERCENT OF THE SHEET THICKNESS AS SHOWN
   SEE A AND B FOR THE NOTCH LOCATION
3. BOND 4 RUBBER FEET TO THE REFERENCE STANDARD IN THE APPROXIMATE POSITIONS SHOWN.

2162257 S0000473057_V1

Reference Standard NDT3036
Figure 2

BOEING PROPRIETARY - Copyright © Unpublished Work - See title page for details

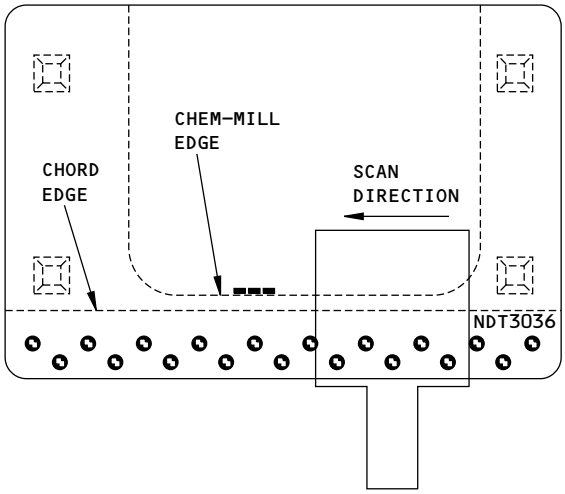

CALIBRATION POSITION A

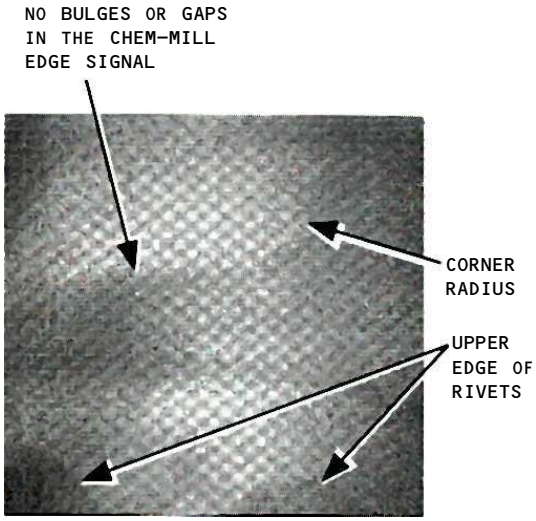

303 IMAGER DISPLAY

DETAIL I

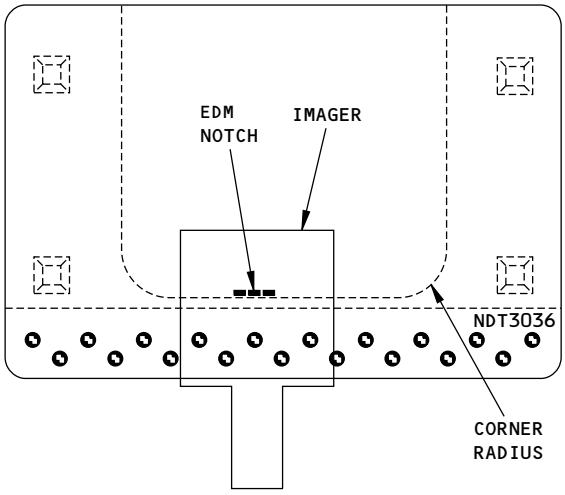

CALIBRATION POSITION B

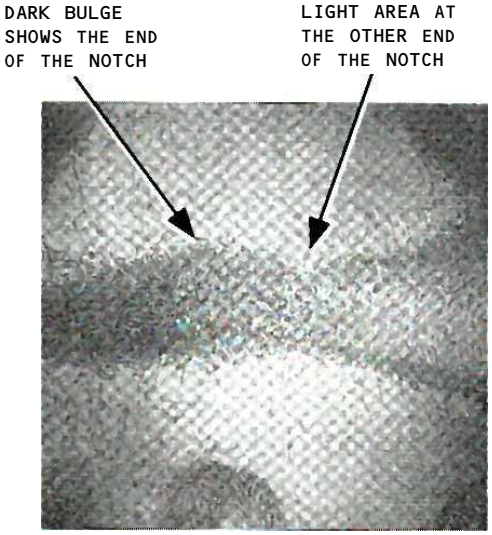

303 IMAGER DISPLAY

DETAIL II

NOTES

- THE NOTCH SIGNAL SHOWN IN DETAIL II WILL SHOW BETTER WHEN YOU DO THE CALIBRATION. THE DARK BULGE WILL BE DARKER. ALSO, YOU WILL SEE IT EASIER BECAUSE IT WILL MOVE ACROSS THE DISPLAY AS YOU DO THE SCAN.
- IF CONVERSION COATED RIVETS WERE PUT IN THE REFERENCE STANDARD, THE RIVET SIGNALS CAN LOOK WEAK IN THE DISPLAY. THE WEAK RIVET SIGNALS ARE PERMITTED BECAUSE THE INSPECTION AREA IS NOT AT RIVET LOCATIONS. ANODIZED RIVETS WILL SHOW DARKER IN THE DISPLAY.

2162259 S0000473058_V1

Calibration Positions and Imager Displays
Figure 3

BOEING PROPRIETARY - Copyright © Unpublished Work - See title page for details

PART 6 - EDDY CURRENT

SURFACE INSPECTION OF THE HORIZONTAL STABILIZER UPPER REAR SPAR CHORD FROM STAB STA 68.14 TO 193.9

1. Purpose

A. Use this procedure to do a surface inspection for cracks in the rear spar chord of the horizontal stabilizer, between stabilizer station 68.14 and 193.9, with high frequency eddy current. The inspection is done from the upper surface of the horizontal stabilizer, between the skin surfaces. See Figure 1 for the inspection areas.

B. 737 Supplemental Structural Inspection Document (D6-37089) Reference:

(1) Item: E-17

2. Equipment

A. General

(1) Use inspection equipment that can be calibrated on the reference standard as specified in Paragraph 4.

(2) Refer to Part 1, 51-01-00, for data about the equipment manufacturers.

B. Instrument

(1) Use an eddy current instrument that:

(a) Has an impedance plane display or a meter display.

(b) Operates at a frequency between 50 kHz and 500 kHz.

(2) The instruments that follow were used to help prepare this procedure.

(a) Phasec 2.1; Hocking/Krautkramer

(b) NDT 19e; Staveley Instruments

(c) MIZ-10B; Zetec, Inc.

C. Probes

(1) Use a probe that:

(a) Operates at a frequency between 50 and 500 kHz.

(b) Has a maximum external diameter of 0.13 inch (3.3 mm).

(c) Has a maximum length of 6.0 inch (152 mm).

(d) Has a minimum drop of 0.3 inch (7.6 mm).

(e) Is shielded.

(f) Operates as specified in Part 6, 51-00-00, Procedure 4 or Part 6, 51-00-00, Procedure 23.

NOTE: A straight probe can also be used for this inspection, but an angled probe will make the inspection easier.

(2) The probes that follow were used to help prepare this procedure.

(a) MMP-902-45; NDT Engineering

(b) MP-902-40B; NDT Engineering

D. Reference Standards

BOEING PROPRIETARY - Copyright © Unpublished Work - See title page for details

(1) Use reference standard 126 to do a calibration for this procedure. Refer to Part 6, 51-00-00, Procedure 4 or Part 6, 51-00-00, Procedure 23.

3. Prepare for the Inspection

A. Remove sealant from the inspection area. The inspection area is along the rear spar chord, between the skins.

B. Clean the inspection surfaces.

4. Instrument Calibration

A. Calibrate the equipment as specified in Part 6, 51-00-00, Procedure 4 or Part 6, 51-00-00, Procedure 23.

5. Inspection Procedure

A. Put the probe on the inspection surface identified in Figure 1 and do a check of the balance and lift-off. If necessary, adjust the balance and lift-off on the part.

B. Examine the upper spar chord of the horizontal stabilizer for cracks between stabilizer station 68.14 and 193.9 as specified in Part 6, 51-00-00, Procedure 4 or Part 6, 51-00-00, Procedure 23.

6. Inspection Results

A. A fast meter movement that occurs as the probe moves a short distance is a possible crack indication; more inspection is necessary.

B. Refer to Part 6, 51-00-00, Procedure 4 or Part 6, 51-00-00, Procedure 23, par. 7, for more instructions to help with the analysis of the possible crack signals.

BOEING PROPRIETARY - Copyright © Unpublished Work - See title page for details

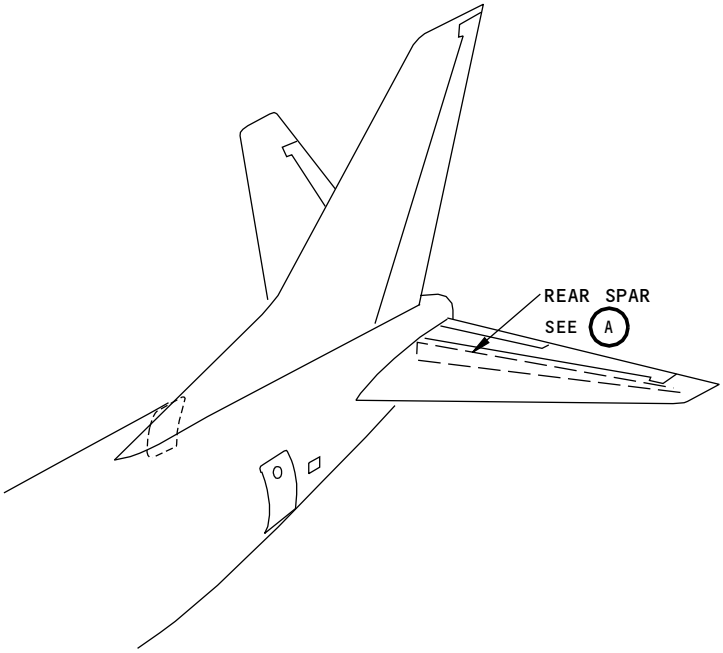

2162260 S0000473060_V1

Horizontal Stabilizer Upper Spar Chord Inspection
Figure 1 (Sheet 1 of 3)

BOEING PROPRIETARY - Copyright © Unpublished Work - See title page for details

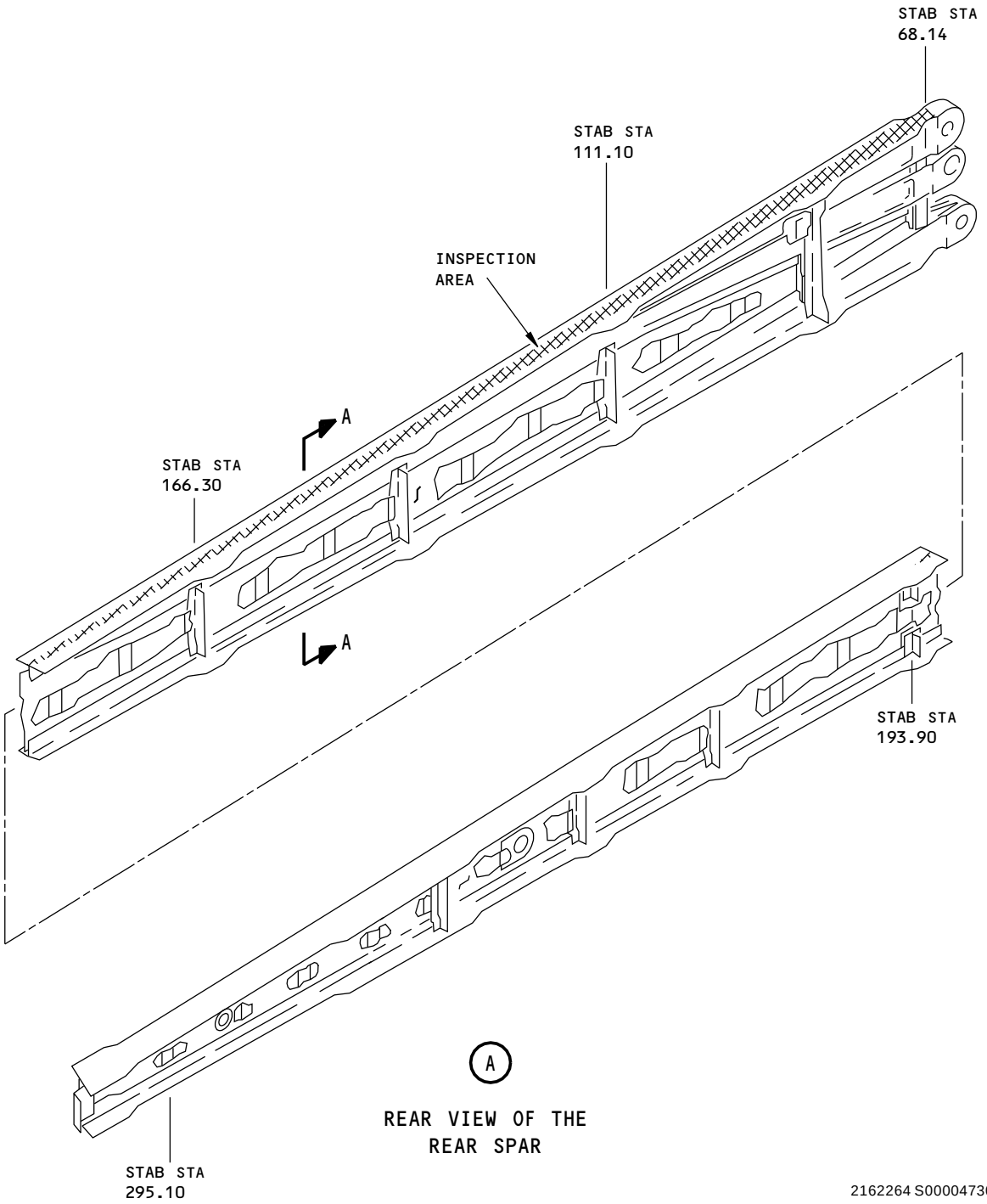

2162264 S0000473061_V1

Horizontal Stabilizer Upper Spar Chord Inspection
Figure 1 (Sheet 2 of 3)

BOEING PROPRIETARY - Copyright © Unpublished Work - See title page for details

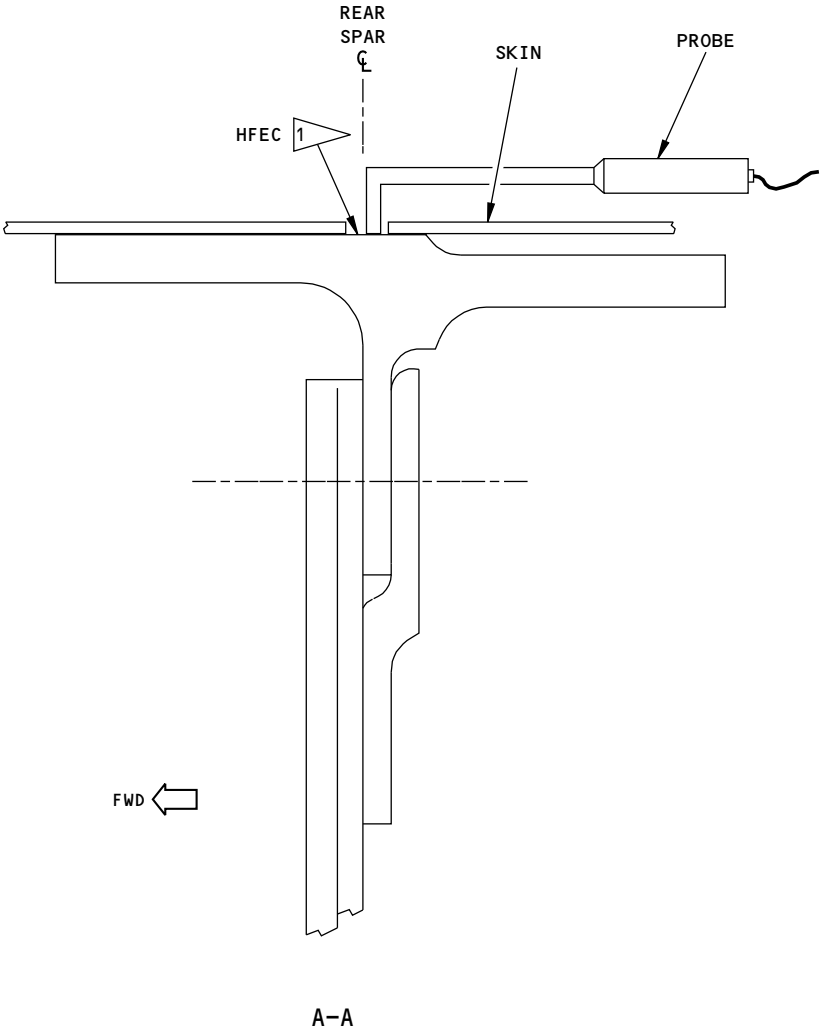

NOTES:

INSPECTION AREA

- THE LEFT SIDE IS SHOWN; THE RIGHT SIDE IS ALMOST THE SAME

1 DO A SCAN ALONG THE TOP OF THE REAR SPAR CHORD AT THE EDGES OF THE SKINS BETWEEN STAB STA 68.14 AND 193.9. DO THE INSPECTION ON THE LEFT AND RIGHT SIDES OF THE HORIZONTAL STABILIZER.

2162265 S0000473062_V1

Horizontal Stabilizer Upper Spar Chord Inspection
Figure 1 (Sheet 3 of 3)

BOEING PROPRIETARY - Copyright © Unpublished Work - See title page for details

PART 6 - EDDY CURRENT

HORIZONTAL STABILIZER - CENTER SECTION - THRUST BEAMS

1. **Purpose**

   A. To find cracks in the upper and lower chord flanges, gusset plates, and splice angles of the thrust beams that are in the center section of the horizontal stabilizer. See Figure 1 for the inspection areas.

   B. There are two thrust beams to be examined. All parts to be examined are aluminum.

   C. 737 Maintenance Planning Document (MPD) Damage Tolerance Record (DTR) Check Form Reference:

      (1) Item: E-31A (horizontal and vertical flanges of the upper chord at the rear spar joints)

      (2) Item: E-31B (horizontal flange of the lower chord at the front spar joints)

      (3) Item: E-31C (vertical flange of the lower chord at the front spar joints)

      (4) Item: E-31D (lower gusset plate and splice angles at the front spar joints)

2. **Equipment**

   A. General

      (1) All eddy current instruments and probes that can be calibrated on the reference standard as specified in Part 6, 51-00-00, Procedure 23, can be used to do this inspection.

   B. Instrument

      (1) Use an instrument that:

         (a) Has an impedance plane display.

         (b) Operates at a frequency between 50 and 500 kHz.

      (2) The instruments that follow were used to help prepare this procedure.

         (a) Locator 2; GE Inspection Technologies

         (b) Nortec 500D; Olympus

   C. Probes

      (1) Use a probe that:

         (a) Operates at a frequency between 50 and 500 kHz.

         (b) Has a 45 to 90 degree angle with a minimum drop of 0.50 inch (12.7 mm).

         (c) Is shielded.

         (d) Has a flexible shaft.

         (e) Has a 0.06 to 0.09 inch (1.5 to 2.29 mm) diameter tip.

      (2) An MMP455-50FX probe that is made by Olympus was used to help prepare this procedure.

   D. Reference Standards

      (1) Use reference standard 126 to help calibrate the instrument to examine the horizontal and vertical flanges of the upper and lower chords (as applicable). Refer to Part 6, 51-00-00, Procedure 23, for data about reference standard 126.

      (2) Use reference standard 188A and the aluminum rivet to help calibrate the instrument to examine the lower gusset plates and splice angles. Refer to Part 6, 51-00-00, Procedure 23, for data about reference standard 188A.

BOEING PROPRIETARY - Copyright © Unpublished Work - See title page for details

3. **Prepare for the Inspection**

A. Get access to the thrust beams in the center section of the horizontal stabilizers as follows:

(1) Use access door 3701 (blowout door), the cutout in the BS 1088 bulkhead, and the center section area between BS 1088 and BS 1156. See Figure 1.

B. Clean the inspection surfaces of loose paint and dirt. See Part 6, 51-00-00, Procedure 23, for more instructions to help prepare for the inspection.

4. **Instrument Calibration**

A. Calibrate the instrument as specified in Part 6, 51-00-00, Procedure 23, and the steps that follow:

(1) Use reference standard 126 to help calibrate the instrument to examine the horizontal and vertical flanges of the upper and lower chords (as applicable).

(2) Use reference standard 188A and the aluminum rivet to help calibrate the instrument to examine the lower gusset plates and splice angles.

5. **Inspection Procedure**

A. Examine the upper and lower chords (as applicable) of the thrust beams for cracks as specified in Part 6, 51-00-00, Procedure 23. See Figure 1 for the inspection areas.

(1) Make one scan on the edge of the vertical flange on each of the two thrust beams as follows:

(a) For DTR Item E-31A: Examine the vertical flanges of the upper chords at the rear spar joints.

(b) For DTR Items E-31B and E-31C: Examine the vertical flanges of the lower chords at the front spar joints. Examine the edges of the vertical flanges at the location of the splice angles only.

(2) Do three scans on the inboard and outboard edges of the horizontal flanges of the two thrust beams as follows:

(a) Make one scan near the top edge of the flange.

(b) Make one scan in the middle of the flange.

(c) Make one scan near the bottom edge of the flange.

(d) For DTR Item E-31A: Examine the horizontal flanges of the upper chords at the rear spar joints. It is necessary to examine the inboard and outboard edges of the horizontal flanges only at the location of the splice angles and not the full length of the upper chord.

(e) For DTR Items E-31B and E-31C: Examine the horizontal flanges of the lower chords at the front spar joints. It is necessary to examine the inboard and outboard edges of the horizontal flanges only at the location of the splice angles and not the full length of the upper chord.

B. Examine the lower gusset plate and the inboard and outboard lower splice angles of the thrust beams for cracks at the front spar joints as specified in Part 6, 51-00-00, Procedure 23, and as follows. See Figure 1 for the inspection areas.

(1) Do 360 degree scans around each fastener installed in the lower gusset plates and the splice angles of the two thrust beams.

6. **Inspection Results**

A. Refer to Part 6, 51-00-00, Procedure 23, for instructions to help make an analysis of all possible crack signals.

BOEING PROPRIETARY - Copyright © Unpublished Work - See title page for details

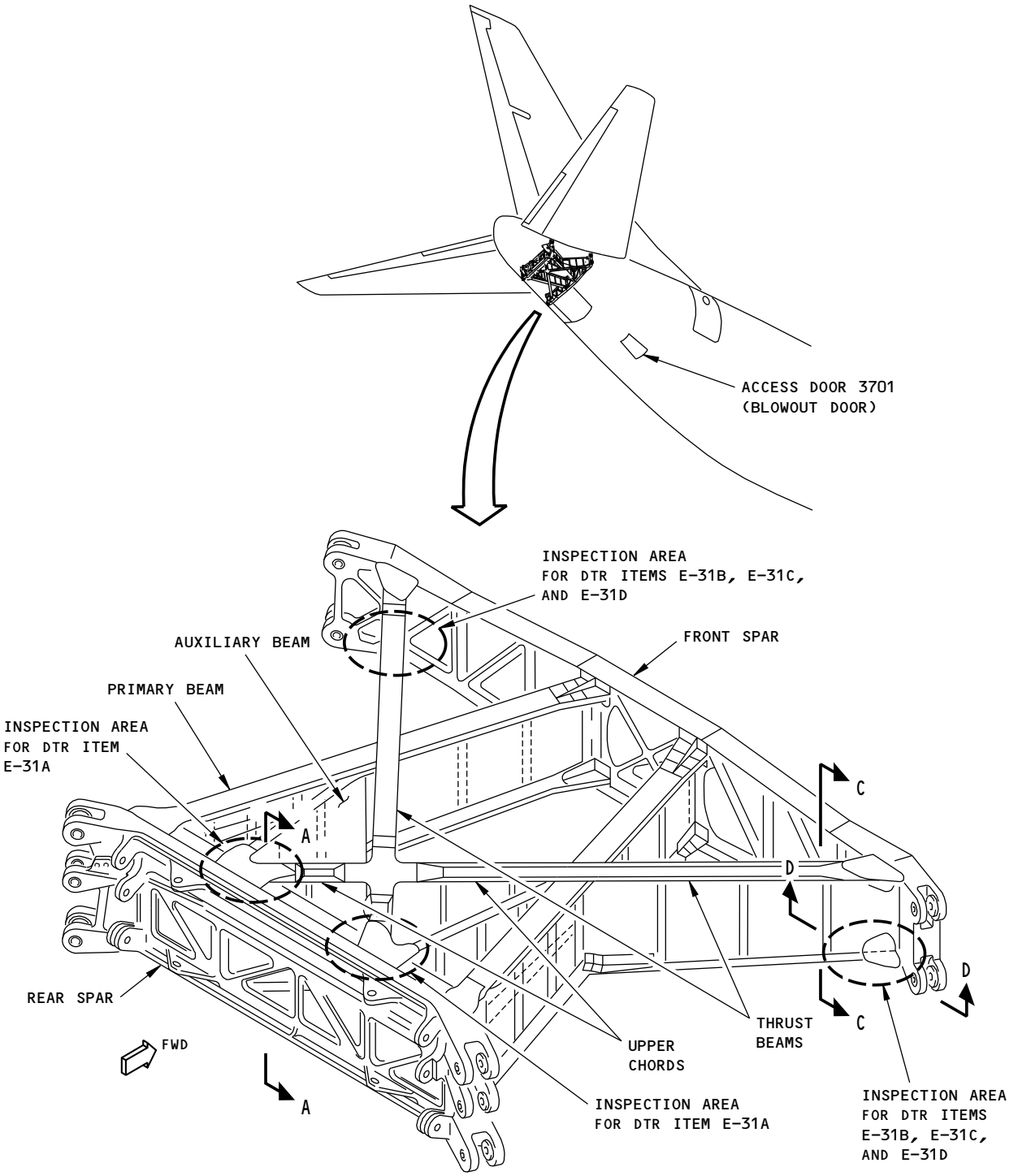

2162268 S0000473064_V2

Inspection Areas
Figure 1 (Sheet 1 of 3)

BOEING PROPRIETARY - Copyright © Unpublished Work - See title page for details

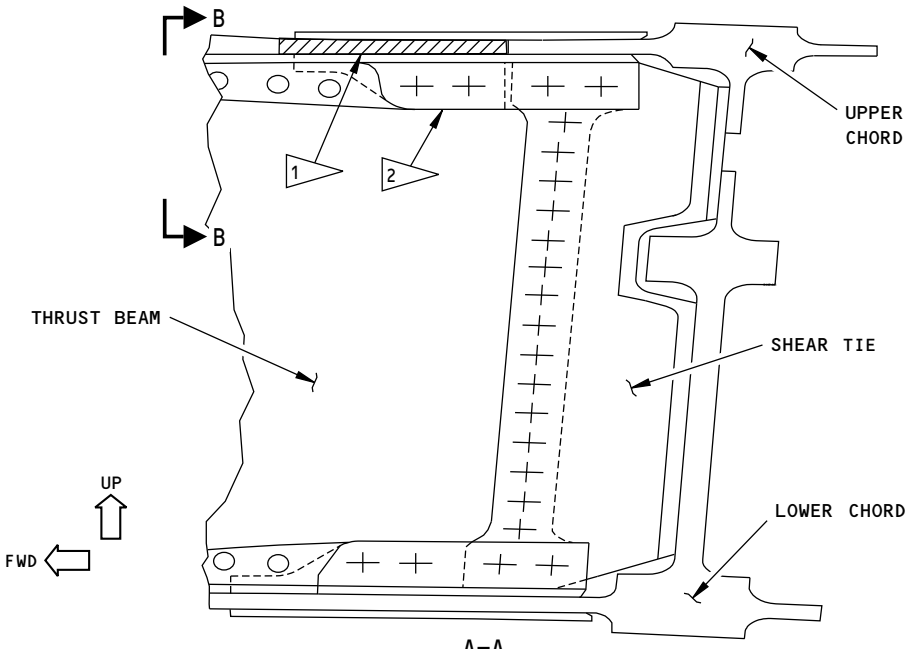

A-A

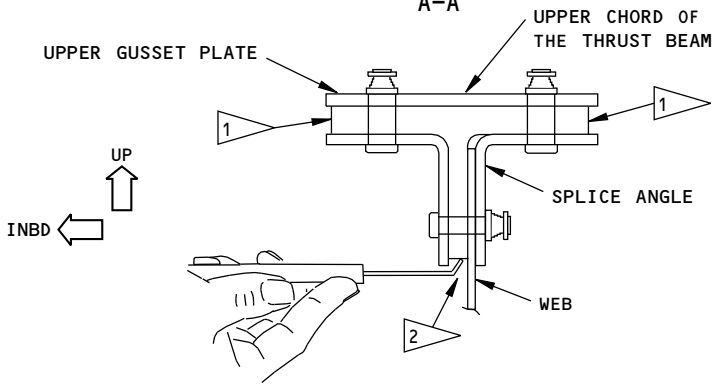

B-B

DTR ITEM E-31A INSPECTION AREAS - UPPER CHORD FLANGES AT THE REPAIR SPAR JOINTS OF THE THRUST BEAMS

NOTES:

INSPECTION AREA

- THE LEFT SIDE IS SHOWN; THE RIGHT SIDE IS OPPOSITE

1 MAKE THREE SCANS ALONG THE EDGE OF THE INBOARD AND OUTBOARD HORIZONTAL FLANGES TO LOOK FOR CRACKS THAT ARE BEHIND THE SPLICE ANGLES AND GUSSET PLATES. MAKE ONE SCAN NEAR THE TOP EDGE OF THE FLANGE, ONE SCAN IN THE MIDDLE OF THE FLANGE, AND ONE SCAN NEAR THE BOTTOM EDGE OF THE FLANGE. DO THIS INSPECTION ON THE LEFT AND RIGHT THRUST BEAMS.

NOTE: THE LONGITUDINAL SCANS MUST BE MADE IN 0.1 INCH (2.5 MM) INCREMENTS.

2 MAKE ONE SCAN ALONG THE EDGE OF THE VERTICAL FLANGE TO LOOK FOR CRACKS THAT ARE BEHIND THE SPLICE ANGLE. DO THIS INSPECTION ON THE LEFT AND RIGHT THRUST BEAMS.

2162270 S0000473065_V2

Inspection Areas
Figure 1 (Sheet 2 of 3)

BOEING PROPRIETARY - Copyright © Unpublished Work - See title page for details

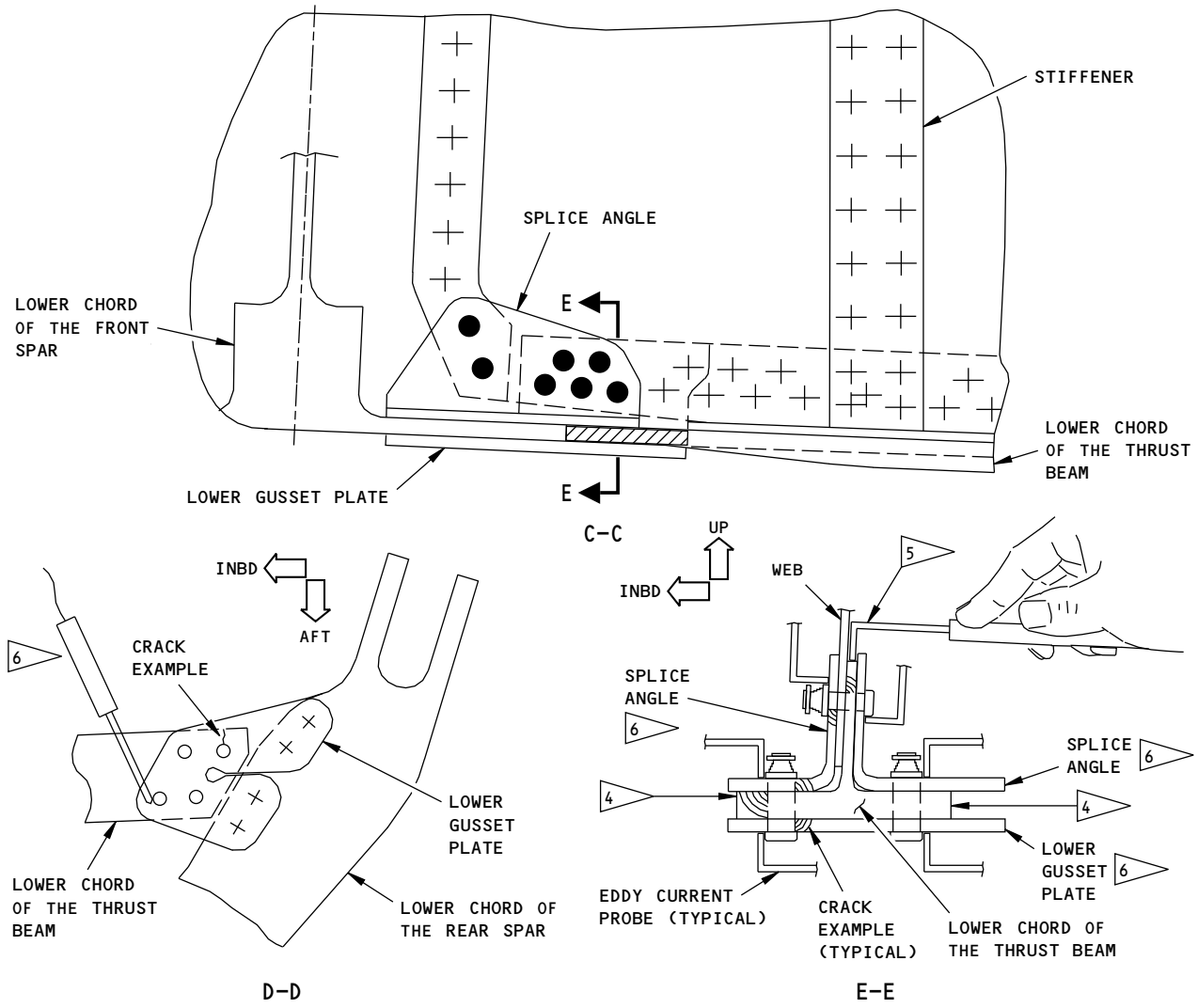

DTR ITEM E-31B, E-31C, AND E-31D INSPECTION AREAS - LOWER CHORD FLANGES, LOWER GUSSET PLATE AND SPLICE ANGLES AT THE FRONT SPAR JOINTS OF THE THRUST BEAMS

NOTES:

INSPECTION AREAS

- THE RIGHT SIDE IS SHOWN; THE LEFT SIDE IS OPPOSITE

4 MAKE THREE LONGITUDINAL SCANS ALONG THE EDGE OF THE INBOARD AND OUTBOARD HORIZONTAL FLANGES TO LOOK FOR CRACKS THAT ARE BEHIND THE SPLICE ANGLES AND GUSSET PLATES. DO THIS INSPECTION ON THE LEFT AND RIGHT THRUST BEAMS.

NOTE: THE LONGITUDINAL SCANS MUST BE MADE IN 0.1 INCH (2.5 MM) INCREMENTS.

5 MAKE ONE LONGITUDINAL SCAN ALONG THE EDGE OF THE VERTICAL FLANGE TO LOOK FOR CRACKS THAT ARE BEHIND THE SPLICE ANGLE. DO THIS INSPECTION ON THE LEFT AND RIGHT THRUST BEAMS.

6 DO 360 DEGREE SCANS AROUND EACH FASTENER (HEAD AND NUT ENDS) INSTALLED IN THE LOWER GUSSET PLATES AND SPLICE ANGLES AT THE FRONT SPAR JOINTS. DO THIS INSPECTION ON THE LEFT AND RIGHT THRUST BEAMS.

2459662 S0000572891_V1

Inspection Areas
Figure 1 (Sheet 3 of 3)

BOEING PROPRIETARY - Copyright © Unpublished Work - See title page for details

PART 6 - EDDY CURRENT

HORIZONTAL STABILIZER - CENTER SECTION - PRIMARY BEAMS

1. **Purpose**

   A. Use this procedure to help find cracks in the primary beams of the center section for the horizontal stabilizers. The primary beams are examined at the rear spar joints for cracks in the flanges of the upper and lower chords in the areas that are adjacent to the splice angles and gusset plates. The upper gusset plates and splice angles at the rear spar joints are also examined for cracks around the fastener locations. See Figure 1 for the inspection areas.

   B. This inspection is applicable to the primary beams, splice angles and gusset plates that are only at the rear spar joints of the center section for the horizontal stabilizers. All parts to be examined are aluminum.

   C. It is necessary to get internal access to the center section of the horizontal stabilizer to do this procedure.

   D. 737 Maintenance Planning Document (MPD) Damage Tolerance Record (DTR) Check Form Reference:

      (1) Item: E-30A (horizontal and vertical flanges of the lower chord of the primary beams at the rear spar joints)

      (2) Item: E-30B (horizontal flange of the upper chord of the primary beams at the rear spar joints)

      (3) Item: E-30C (vertical flange of the upper chord of the primary beams at the rear spar joints)

      (4) Item: E-30D (upper gusset plates and splice angles for the primary beams at the rear spar joints)

2. **Equipment**

   A. General

      (1) All eddy current instruments and probes that can be calibrated on the reference standard as specified in paragraph 5 of Part 6, 51-00-00, Procedure 23, can be used to do this inspection.

   B. Instrument

      (1) Use an instrument that:

         (a) Has an impedance plane display.

         (b) Operates at a frequency between 50 and 500 kHz.

      (2) The instruments that follow were used to help prepare this procedure.

         (a) Locator 2; GE Inspection Technologies

         (b) Nortec 500D; Olympus

   C. Probe

      (1) Use a probe that:

         (a) Operates at a frequency between 50 and 500 kHz.

         (b) Has a 90 degree angle with a maximum drop of 0.50 inch (12.7 mm) or is straight with a flexible shaft.

         (c) Is shielded.

      (2) An MP905-50 probe that is made by Olympus was used to help prepare this procedure.

   D. Reference Standards

BOEING PROPRIETARY - Copyright © Unpublished Work - See title page for details

(1) Use reference standard 126 to help calibrate the instrument to examine the horizontal and vertical flanges of the upper and lower chords (as applicable). Refer to Part 6, 51-00-00, Procedure 23, for data about reference standard 126.

(2) Use reference standard 188A and the aluminum rivet to help calibrate the instrument to examine the upper gusset plates and splice angles. Refer to Part 6, 51-00-00, Procedure 23, for data about reference standard 188A.

3. Prepare for the Inspection

A. Get access to the lower chords of the primary beams in the center section as follows:

(1) Use access door 3701 (blowout door), the cutout in the BS 1088 bulkhead, and the center section area between BS 1088 and BS 1156. See Figure 1.

B. Clean the inspection surfaces of loose paint and dirt. See Part 6, 51-00-00, Procedure 23, for more instructions to help prepare for the inspection.

4. Instrument Calibration

A. Calibrate the instrument as specified in Part 6, 51-00-00, Procedure 23, and as follows:

(1) Use reference standard 126 to help calibrate the instrument to examine the horizontal and vertical flanges of the upper and lower chords (as applicable).

(2) Use reference standard 188A and the aluminum rivet to help calibrate the instrument to examine the upper gusset plates and splice angles.

5. Inspection Procedure

A. Examine the upper and lower chords of the primary beams for cracks at the rear spar joints as specified in paragraph 6 of Part 6, 51-00-00, Procedure 23, and the steps that follow. See Figure 1 for the inspection areas.

(1) Do one scan on the edge of the vertical flange on each of the two primary beams. Do this primary beam inspection only in the areas that are adjacent to the splice angles and gusset plates at the rear spar joints.

(2) Do three scans along the inboard and outboard edges of the horizontal flanges of the two primary beams. Do this primary beam inspection only in the areas that are adjacent to the splice angles and gusset plates at the rear spar joints as follows:

(a) Make one scan near the top edge of the flange.

(b) Make one scan in the middle of the flange.

(c) Make one scan near the bottom edge of the flange.

B. Examine the upper gusset plates and the inboard and outboard upper splice angles for cracks at the rear spar joints as specified in paragraph 6 of Part 6, 51-00-00, Procedure 23, and the step that follows. See Figure 1 for inspection areas.

(1) Do 360 degree scans around each fastener that goes through the upper gusset plates and splice angles.

6. Inspection Results

A. Refer to Part 6, 51-00-00, Procedure 23, paragraph 7, for instructions to help make an analysis of all possible crack signals.

BOEING PROPRIETARY - Copyright © Unpublished Work - See title page for details

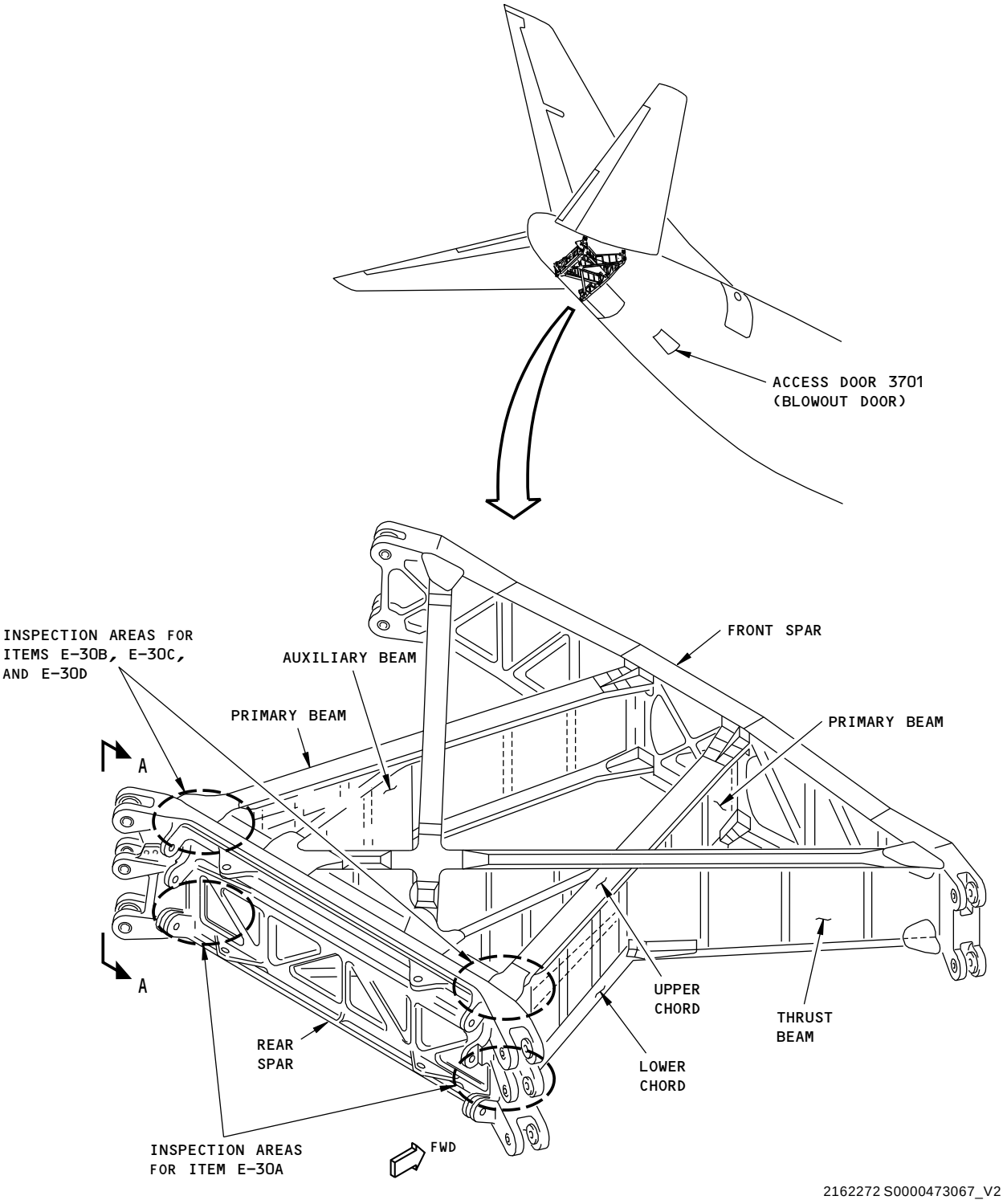

2162272 S0000473067_V2

Inspection Areas
Figure 1 (Sheet 1 of 2)

BOEING PROPRIETARY - Copyright © Unpublished Work - See title page for details

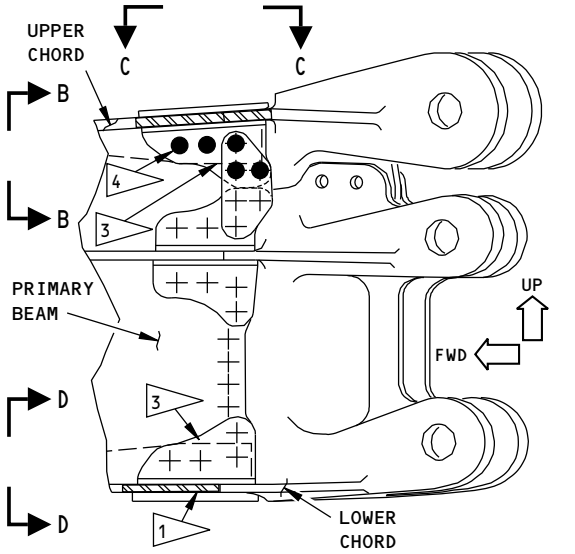

A–A

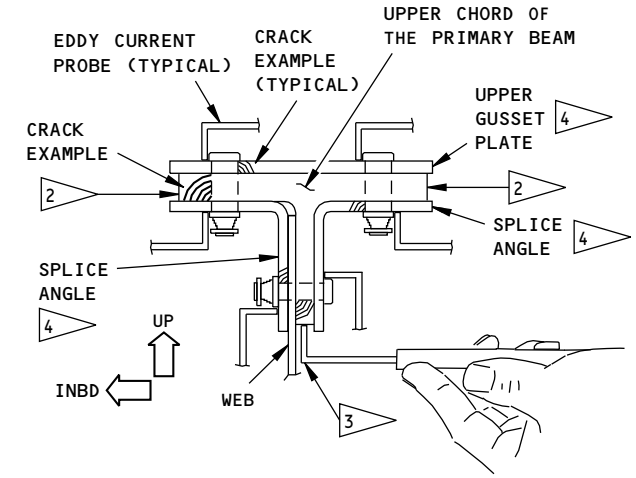

B–B

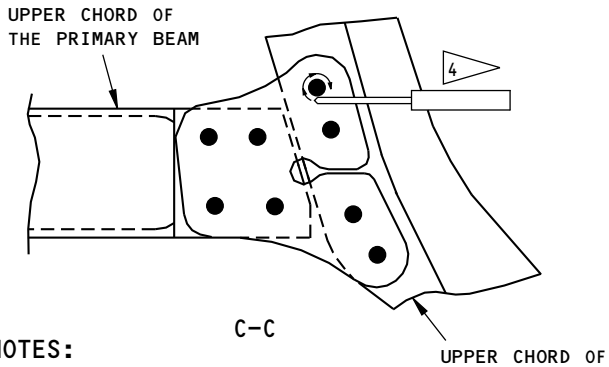

C–C

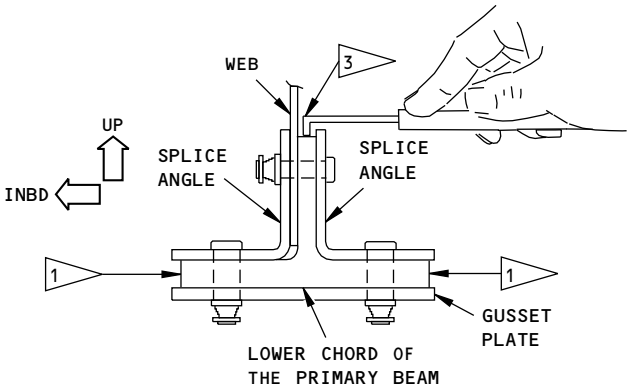

D–D

NOTES:

▨ ● INSPECTION AREAS

- THE LEFT SIDE IS SHOWN; THE RIGHT SIDE IS OPPOSITE

1 MAKE THREE LONGITUDINAL SCANS ALONG THE EDGE OF THE INBOARD AND OUTBOARD HORIZONTAL FLANGES TO LOOK FOR CRACKS THAT ARE BEHIND THE SPLICE ANGLES AND GUSSET PLATES. DO THIS INSPECTION ON THE LEFT AND RIGHT PRIMARY BEAMS.

NOTE: THE LONGITUDINAL SCANS MUST BE MADE IN 0.1 INCH (2.5 MM) INCREMENTS.

2 MAKE FOUR LONGITUDINAL SCANS ALONG THE EDGES OF THE INBOARD AND OUTBOARD HORIZONTAL FLANGES TO LOOK FOR CRACKS THAT ARE BEHIND THE SPLICE ANGLES AND GUSSET PLATES. DO THIS INSPECTION ON THE LEFT AND RIGHT PRIMARY BEAMS.

NOTE: THE LONGITUDINAL SCANS MUST BE MADE IN 0.1 INCH (2.5 MM) INCREMENTS.

3 MAKE ONE LONGITUDINAL SCAN ALONG THE EDGE OF THE VERTICAL FLANGE TO LOOK FOR CRACKS THAT ARE BEHIND THE SPLICE ANGLE. DO THIS INSPECTION ON THE LEFT AND RIGHT PRIMARY BEAMS.

4 DO 360 DEGREE SCANS AROUND EACH FASTENER (HEAD AND NUT ENDS) THAT GOES THROUGH THE UPPER GUSSET PLATES AND SPLICE ANGLES AT THE REAR SPAR JOINTS. DO THESE INSPECTIONS ON THE LEFT AND RIGHT PRIMARY BEAMS.

2162273 S0000473068_V2

Inspection Areas
Figure 1 (Sheet 2 of 2)

BOEING PROPRIETARY - Copyright © Unpublished Work - See title page for details

ATTACHMENT LUG AND CLEVIS FITTING INSPECTION AT THE REAR SPAR OF THE CENTER SECTION OF THE HORIZONTAL STABILIZER

1. Purpose

A. This procedure uses high frequency eddy current to find cracks in the upper clevis fittings at BL 28.0 that are in the upper chord of the rear spar for the center section of the horizontal stabilizer.

B. This procedure also uses high frequency eddy current to find cracks in the upper lug fittings at BL 28.0 that are in the rear spar of the horizontal stabilizer.

C. 737 Supplemental Structural Inspection Document (D6-37089) Reference:

(1) Item: E-19A

(2) Item: E-19B

2. Equipment

A. Use an eddy current instrument and probe that can be calibrated on the reference standard as specified in paragraph 5 of Part 6, 51-00-00, Procedure 4 or Part 6, 51-00-00, Procedure 23.

B. Instruments

(1) Use an eddy current instrument that:

(a) Has a meter or an impedance plane display.

(b) Operates at a frequency between 50 and 500 kHz.

(2) The instruments that follow were used to help prepare this procedure.

(a) Locator 2; Hocking Inc.

(b) Locator UHB; Hocking Inc.

C. Probes

(1) Three probes are necessary to do this procedure.

(2) One probe must have the characteristics that follow:

(a) Be a pencil type probe.

(b) Operate at a frequency between 50 and 500 kHz.

(c) Be a straight or a 90 degree probe.

(d) Be shielded.

NOTE: The probe used to help prepare this procedure that has these characteristics was an MP-50 probe that is made by NDT Product Engineering.

(3) One probe must have the characteristics that follow:

(a) Be a blade type probe.

(b) Operate at a frequency between 50 and 500 kHz.

(c) Have a maximum shaft thickness of 0.090 inch (2.29 mm).

(d) Have a 45 or a 60 degree angle.

(e) Have a minimum work length of 6.0 inches (152 mm).

(f) Be flexible.

BOEING PROPRIETARY - Copyright © Unpublished Work - See title page for details

(4) One probe must have the characteristics that follow:

(a) Be a pencil type probe.

(b) Operate at a frequency between 50 and 500 kHz.

(c) Have a 90 degree angle with a maximum drop of 0.030 inch (0.76 mm).

(d) Have a maximum probe height of 0.155 inch (3.9 mm).

(e) Have a minimum length of 5.0 inches (127 mm).

(f) Be shielded.

(g) Be flexible.

NOTE: The probe used to help prepare this procedure that has these characteristics was an MP9003-50FX probe that is made by NDT Product Engineering.

3. Prepare for the Inspection

A. Identify the inspection areas shown in Figure 1.

B. Remove panels 9123 on the left side of the airplane and 9223 on the right side of the airplane to get access to the inspection areas.

C. Clean the inspection surfaces of loose paint and dirt. See Part 6, 51-00-00, Procedure 4 or Part 6, 51-00-00, Procedure 23 for the preparation instructions.

D. Remove sealant that is all around the washers identified in Figure 1. Refer to the Aircraft Maintenance Manual (AMM) for the sealant removal procedures.

4. Instrument Calibration

A. Calibrate the instruments as specified in Part 6, 51-00-00, Procedure 4 (for meter display instruments) and Part 6, 51-00-00, Procedure 23 (for impedance plane display instruments).

5. Inspection Procedure

A. Identify the inspection areas shown in Figure 1.

B. Examine the lugs of the upper clevis fitting for cracks as follows:

(1) Examine the inspection areas identified by flagnotes 1 and 5 in Figure 1 as follows:

(a) Calibrate the instrument as specified in Paragraph 4. with the probe specified in Paragraph 2.C.(2).

(b) Make 360 degree scans around the holes or washers with the probe on the outer faces of the lugs.

1) Use a nonconductive circle template as a probe guide to examine the areas around the holes.

2) Use the washers as a probe guide to examine the areas around the washers.

(2) Examine the inspection areas identified by flagnotes 2 and 6 in Figure 1 as follows:

(a) Calibrate the instrument as specified in Paragraph 4. with the probe specified in Paragraph 2.C.(3).

(b) Make 360 degree scans around the bushing flanges with the probe on the inner faces of the lugs.

1) Use the bushing flanges as probe guides.

C. Examine the upper lug fitting for cracks as follows:

(1) Examine the inspection areas identified by flagnotes 2 and 7 in Figure 1 as follows:

BOEING PROPRIETARY - Copyright © Unpublished Work - See title page for details

(a) Calibrate the instrument as specified in Paragraph 4. with the probe specified in Paragraph 2.C.(3).

(b) Make 360 degree scans around the bushing flanges with the probe on the outer faces of the upper lugs.

1) Use the bushing flanges as probe guides.

(2) Examine the inspection areas identified by flagnotes 3 and 8 in Figure 1 as follows:

(a) Calibrate the instrument as specified in Paragraph 4. with the probe specified in Paragraph 2.C.(4).

(b) Make a sufficient number of scans to completely examine the top, outer radius and bottom surfaces of the upper lug.

6. Inspection Results

A. For meter display instruments, refer to Part 6, 51-00-00, Procedure 4, to make an analysis of the indications that were found during the inspection.

B. For impedance plane display instruments, refer to Part 6, 51-00-00, Procedure 23, to make an analysis of the indications that were found during the inspection.

C. Compare the signals that you get during the inspection of the airplane with the signals that you got from the notch in the reference standard during calibration.

BOEING PROPRIETARY - Copyright © Unpublished Work - See title page for details

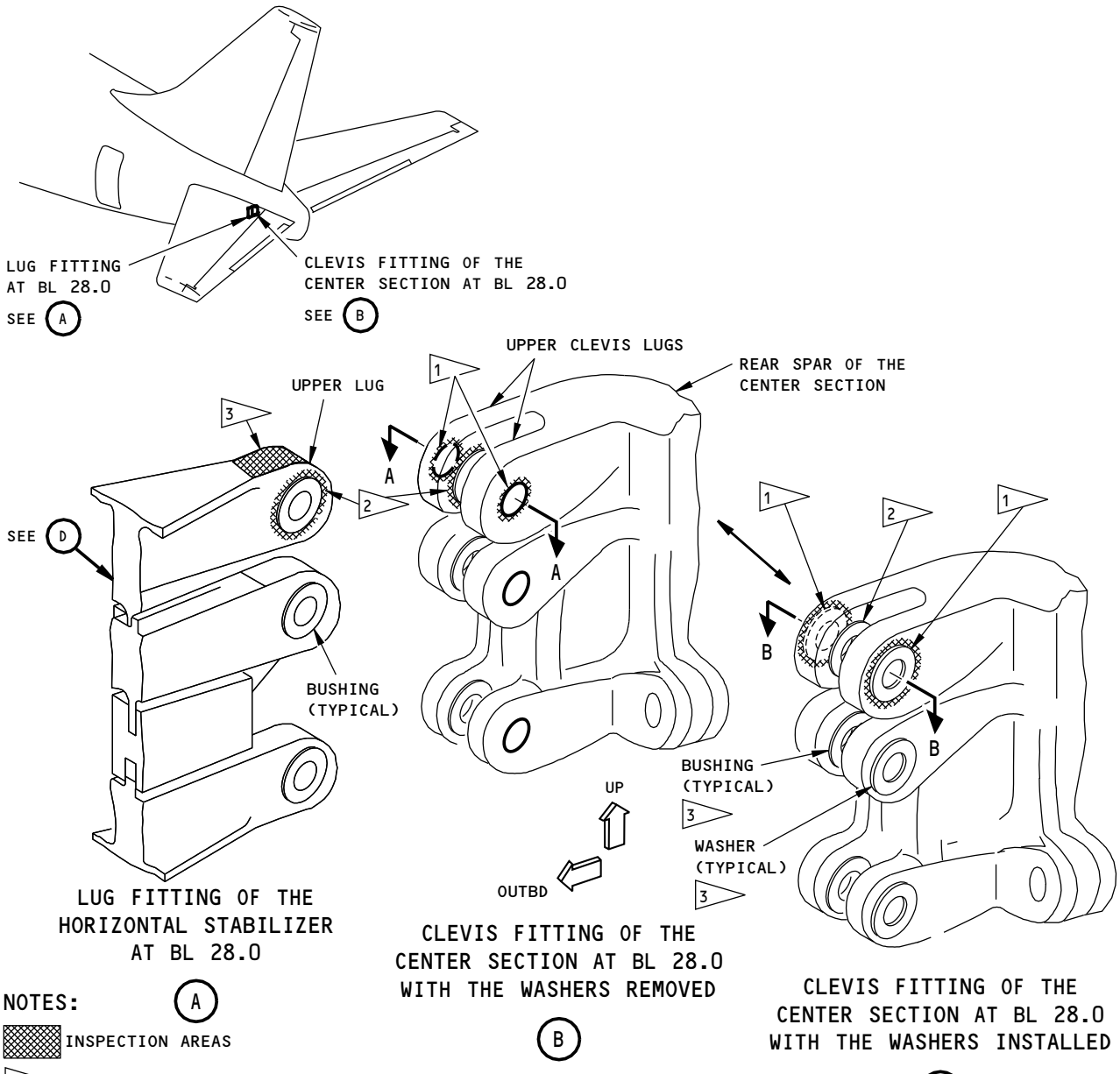

NOTES:

INSPECTION AREAS

1 INSPECTION AREAS ON THE OUTER FACES OF THE UPPER CLEVIS LUGS. IF THERE ARE WASHERS ON THE OUTER FACES, REMOVE THE SEALANT THAT IS AROUND THE WASHER BEFORE YOU MAKE THE SCAN. IF THE WASHERS ARE REMOVED, MAKE THE SCAN AROUND THE EDGE OF THE HOLE.

2 INSPECTION AREAS ON THE INNER FACES OF THE UPPER CLEVIS LUGS AND ON THE OUTER FACES OF THE UPPER LUG. REMOVE THE SEALANT THAT IS AROUND THE FLANGE OF THE BUSHING BEFORE YOU MAKE THE SCAN.

3 INSPECTION AREAS ON THE TOP, THE OUTER RADIUS AND THE BOTTOM SURFACES OF THE UPPER LUG.

2162274 S0000473070_V2

Lug and Clevis Fitting Inspection Areas - Horizontal Stabilizer
Figure 1 (Sheet 1 of 3)

BOEING PROPRIETARY - Copyright © Unpublished Work - See title page for details

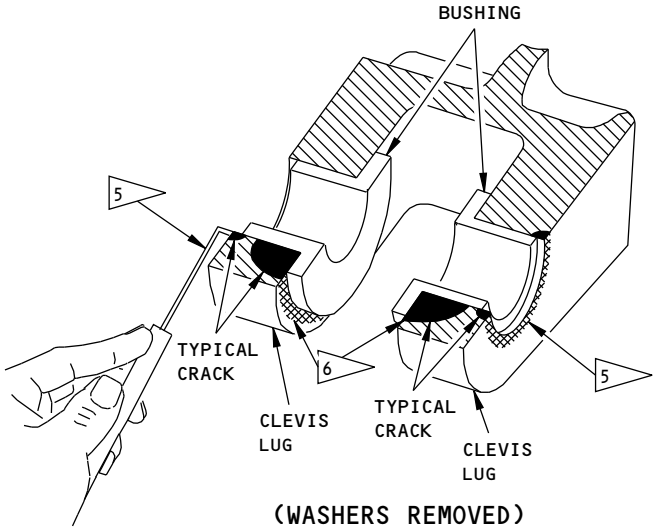

(WASHERS REMOVED)
A-A

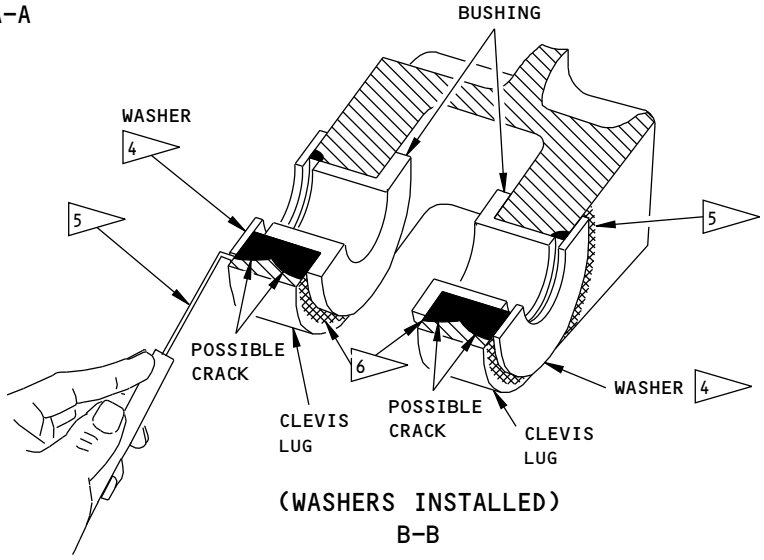

(WASHERS INSTALLED)
B-B

4 REMOVE SEALANT THAT IS ALL AROUND THE WASHERS AS SPECIFIED IN THE AIRCRAFT MAINTENANCE MANUAL (AMM).

5 USE THE PROBE SPECIFIED IN PARAGRAPH 2.C.(2) TO MAKE A 360 DEGREE SCAN ON THE OUTER FACE OF THE CLEVIS LUGS. IF THE WASHER IS REMOVED, USE A NONCONDUCTIVE CIRCLE TEMPLATE TO EXAMINE THE AREA AROUND THE HOLE. IF THE WASHER IS INSTALLED, DO THE SCAN AROUND THE OUTER EDGE OF THE WASHER. EXAMINE THE OUTER FACES OF THE FORWARD AND AFT LUGS ON THE LEFT AND RIGHT SIDES OF THE AIRPLANE.

6 USE THE PROBE SPECIFIED IN PARAGRAPH 2.C.(3) TO MAKE A 360 DEGREE SCAN ON THE INNER FACE OF THE CLEVIS LUGS. DO THE SCAN AROUND THE OUTER EDGE OF THE BUSHING FLANGE. EXAMINE THE INNER FACES OF THE FORWARD AND AFT LUGS ON THE LEFT AND RIGHT SIDES OF THE AIRPLANE.

2162278 S0000473071_V2

Lug and Clevis Fitting Inspection Areas - Horizontal Stabilizer
Figure 1 (Sheet 2 of 3)

BOEING PROPRIETARY - Copyright © Unpublished Work - See title page for details

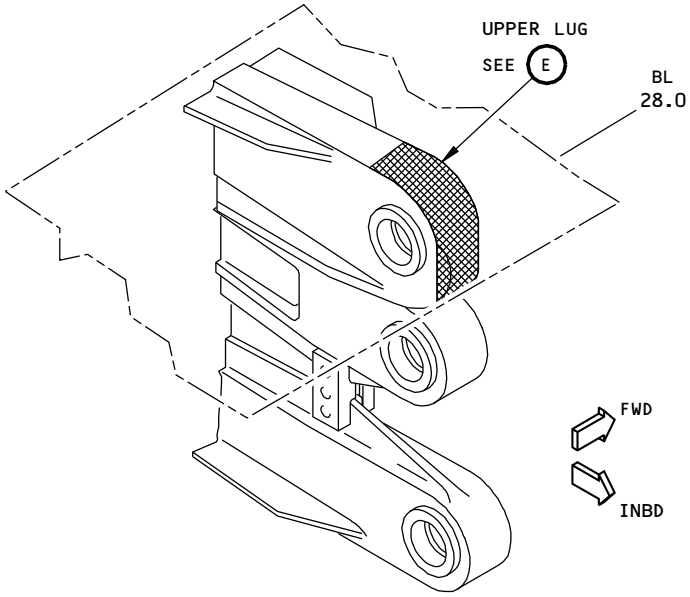

LUG FITTING AT THE REAR SPAR
OF THE HORIZONTAL STABILIZER
(THE LEFT SIDE IS SHOWN;
THE RIGHT SIDE IS OPPOSITE)

D

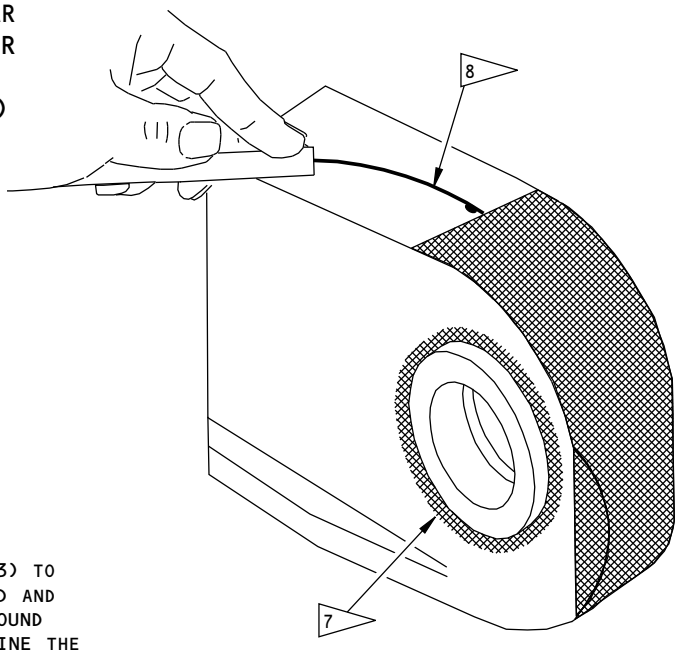

UPPER LUG

E

7 USE THE PROBE SPECIFIED IN PARAGRAPH 2.C.(3) TO MAKE A 360 DEGREE SCAN ON THE OUTER FORWARD AND AFT FACES OF THE UPPER LUG. DO THE SCAN AROUND THE OUTER EDGE OF THE BUSHING FLANGE. EXAMINE THE OUTER FACES OF THE UPPER LUG ON THE LEFT AND RIGHT SIDES OF THE AIRPLANE.

8 USE THE PROBE SPECIFIED IN PARAGRAPH 2.C.(4) TO MAKE A SUFFICIENT NUMBER OF SCANS TO COMPLETELY EXAMINE THE TOP, OUTER RADIUS AND BOTTOM SURFACES OF THE UPPER LUG ON THE LEFT AND RIGHT SIDES OF THE AIRPLANE.

2162282 S0000473073_V2

Lug and Clevis Fitting Inspection Areas - Horizontal Stabilizer
Figure 1 (Sheet 3 of 3)

BOEING PROPRIETARY - Copyright © Unpublished Work - See title page for details

PART 6 - EDDY CURRENT

SURFACE INSPECTION OF THE UPPER CHORD IN THE REAR SPAR OF THE HORIZONTAL STABILIZER FROM STAB STA 68.14 TO 193.9

1. Purpose

A. Use this procedure to examine the upper chord in the rear spar of the horizontal stabilizer for surface cracks between STAB STA 68.14 and 193.9. This inspection uses high frequency eddy current and is done from the upper surface of the horizontal stabilizer, between the skin surfaces. See Figure 1 for the inspection areas.

B. This procedure uses an impedance plane display instrument or a meter display instrument to find surface cracks. Refer to Part 6, 51-00-00, Procedure 4 for meter display instruments or Part 6, 51-00-00, Procedure 23 for impedance plane display instruments.

C. 737 Supplemental Structural Inspection Document (D6-37089) Reference:

(1) Item: E-17B

2. Equipment

A. General

(1) Use inspection equipment that can be calibrated on the reference standard as specified in Paragraph 4.

(2) Refer to Part 1, 51-01-00, for data about the equipment manufacturers.

B. Instrument

(1) Use an eddy current instrument that:

(a) Has an impedance plane display or a meter display.

(b) Operates at a frequency between 50 kHz and 500 kHz.

(2) The instruments that follow were used to help prepare this procedure.

(a) Phasec 2.1; Hocking/Krautkramer

(b) NDT 19e; Staveley Instruments

C. Probes

(1) Use a probe that:

(a) Operates at a frequency between 50 and 500 kHz.

(b) Has a maximum external diameter of 0.13 inch (3.3 mm).

(c) Has a maximum length of 6.0 inch (152 mm).

(d) Has a minimum drop of 0.3 inch (7.6 mm).

(e) Is shielded.

(f) Operates as specified in Part 6, 51-00-00, Procedure 4 (for meter display instruments) or Part 6, 51-00-00, Procedure 23 (for impedance plane display instruments).

NOTE: A straight probe can also be used for this inspection, but an angled probe will make the inspection easier.

(2) The probes that follow were used to help prepare this procedure.

(a) MMP-902-45; NDT Engineering

BOEING PROPRIETARY - Copyright © Unpublished Work - See title page for details

(b) MP-902-40B; NDT Engineering

D. Reference Standards

(1) Use reference standard 126 to do a calibration for this procedure. Refer to Part 6, 51-00-00, Procedure 4 (for meter display instruments) or Part 6, 51-00-00, Procedure 23 (for impedance plane display instruments) for the reference standard data.

3. Prepare for the Inspection

A. Remove sealant from the inspection area; the area along the upper chord, between the skins.

B. Clean the inspection surfaces.

4. Instrument Calibration

A. Calibrate the instrument as specified in Part 6, 51-00-00, Procedure 4 (for meter display instruments) or Part 6, 51-00-00, Procedure 23 (for impedance plane display instruments).

5. Inspection Procedure

A. Put the probe on the inspection surface identified in Figure 1 and do a check of the balance and the lift-off. If necessary, adjust the balance and lift-off signals with the probe on the upper chord.

B. Examine the upper chord of the rear spar for surface cracks from STAB STA 68.14 to 193.9 as specified in Part 6, 51-00-00, Procedure 4 (for meter display instruments) or Part 6, 51-00-00, Procedure 23 (for impedance plane display instruments).

6. Inspection Results

A. A fast meter movement that occurs as the probe is moved a short distance is a possible crack indication.

B. Refer to par. 7 of Part 6, 51-00-00, Procedure 4 (for meter display instruments) or Part 6, 51-00-00, Procedure 23 (for impedance plane display instruments) to help make an analysis of the possible crack signals.

BOEING PROPRIETARY - Copyright © Unpublished Work - See title page for details

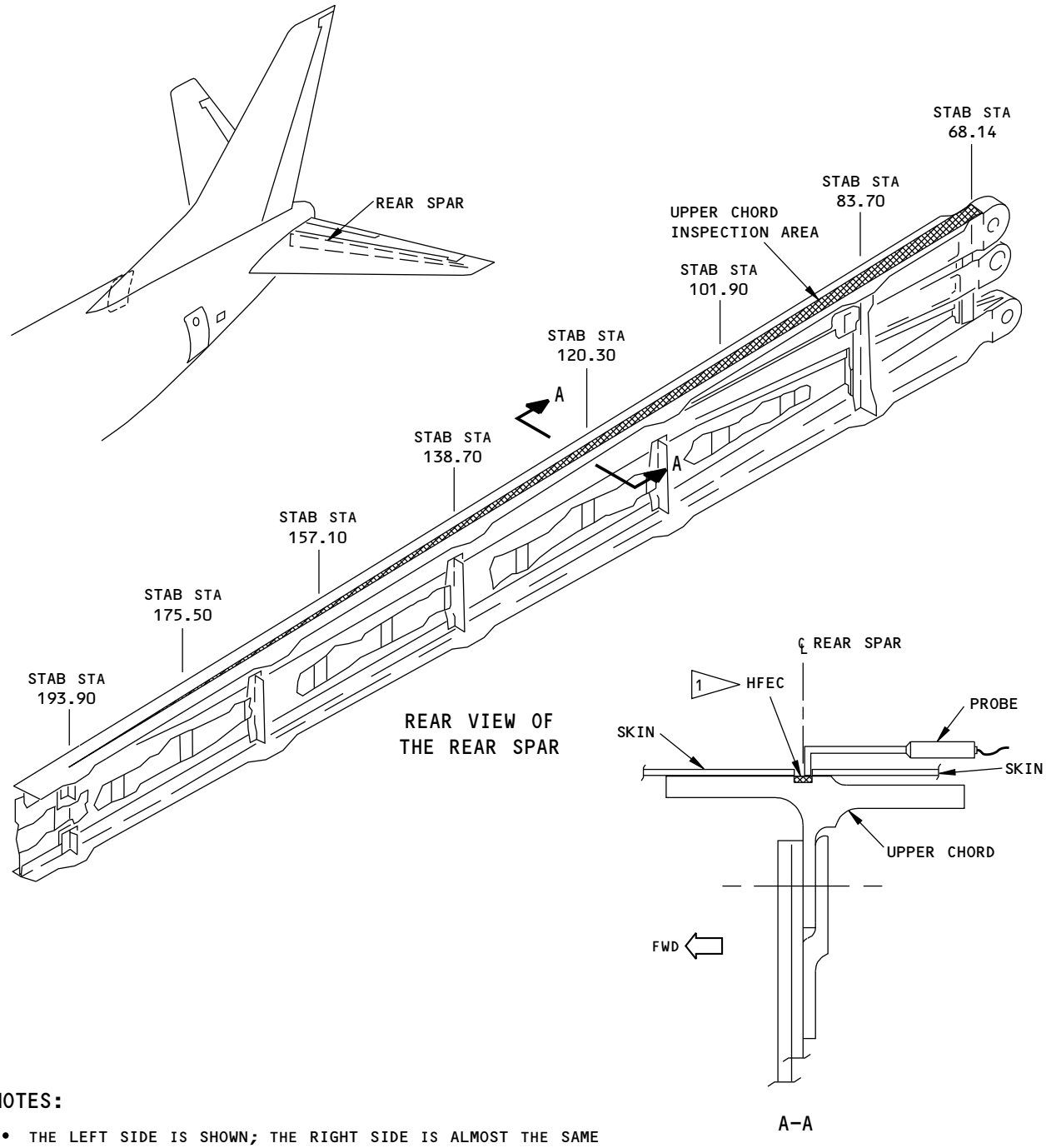

NOTES:

- THE LEFT SIDE IS SHOWN; THE RIGHT SIDE IS ALMOST THE SAME

1 DO A SCAN OF THE UPPER CHORD IN THE AREA IDENTIFIED BY THE CROSS-HATCH ( ) AT THE EDGE OF THE SKIN CUTOUTS BETWEEN STAB STA 68.14 AND STAB STA 193.9 ON THE RIGHT AND LEFT HORIZONTAL STABILIZERS.

2162284 S0000473077_V1

Horizontal Stabilizer - Upper Chord Inspection
Figure 1

BOEING PROPRIETARY - Copyright © Unpublished Work - See title page for details

PART 6 - EDDY CURRENT

UPPER CLEVIS LUGS ON THE FRONT SPAR OF THE HORIZONTAL STABILIZER CENTER SECTION (HFEC)

1. Purpose

A. Use this procedure to find cracks in the upper clevis lugs of the front spar at the horizontal stabilizer center section. See Figure 1 for the inspection areas.

B. 737 Maintenance Planning Document (MPD) Damage Tolerance Record (DTR) Check Form Reference:

(1) Item: 55-10-11-1

C. 737 Maintenance Planning Document (D6-26A001) Reference:

(1) Item: 55-10-11-1

2. Equipment

A. General

(1) Use inspection equipment that can be calibrated on the reference standard as specified in Paragraph 4.

(2) Refer to Part 1, 51-01-00, for data about the equipment manufacturers.

B. Instruments

(1) Use an eddy current instrument that:

(a) Has an impedance plane display.

(b) Operates at a frequency range of 50 to 500 kHz.

(2) The instrument that follows was used to help prepare this procedure.

(a) Nortec 2000D; Olympus NW NDT Inc.

C. Probes

(1) Use a shielded pencil probe that can operate at a frequency between 50 and 500 kHz. A right angle probe is recommended for this inspection to help move the probe around the washer when you examine the surface of the clevis lug.

(2) The probe that follows was used to help prepare this procedure.

(a) TPEN9120-6B; Techna NDT. This is a right angle, shielded, pencil probe with a 1.2 inch (30 mm) drop that is 6.0 inches (152 mm) long and has a 20 degree bent handle.

NOTE: (1) The 1.2 inch (30 mm) drop is recommended to make a scan around the bolt head and nut from outside the airplane and to keep the probe at 90 degrees to the inspection surface because of limited access to the inspection area.

NOTE: (2) If you order this probe, make sure you tell the probe manufacturer the eddy current instrument you will use. The above probe has a Triax connector. A probe cable must be ordered separately.

D. Reference Standard

(1) Use reference standard 188A. Refer to Part 6, 51-00-00, Procedure 23, for data about this reference standard.

BOEING PROPRIETARY - Copyright © Unpublished Work - See title page for details

3. **Prepare for the Inspection**

   A. Identify the inspection areas shown in Figure 1.

      (1) Get access to the top surface of the horizontal stabilizer.

      (2) Remove the gap covers and sliding seals.

      (3) Clean the area around the washer that the probe will touch.

4. **Instrument Calibration**

   A. Calibrate the equipment as specified in Part 6, 51-00-00, Procedure 23.

5. **Inspection Procedure**

   A. Calibrate the instrument to examine the clevis lug for cracks as specified in Paragraph 4.

   B. Identify the upper clevis lugs on the front spar of the horizontal stabilizer that must be examined. Refer to Figure 1.

      NOTE: There are two upper clevis lugs on the front spar of each horizontal stabilizer.

   C. Start the inspection on the aft lug of the upper clevis lugs on the front spar on the left side of the airplane. Put the probe on the aft side of the lug so that it is adjacent to the washer as shown in Figure 1.

   D. Balance the instrument.

   E. Do a 360 degree scan around the washer to examine the lug for cracks. During the scan:

      (1) Use the washer as a guide when you move the probe.

      (2) Make sure the probe touches the washer and is 90 degrees to the lug inspection surface as you move the probe around the fastener.

      (3) Monitor the instrument screen display as you move the probe.

      (4) Record the locations that cause signals to occur that are 40% (or more) of full screen height (FSH).

   F. Do Paragraph 5.C. thru Paragraph 5.E. again but on the forward side of the forward clevis lug.

   G. Do Paragraph 5.C. thru Paragraph 5.F. again but for the upper clevis lugs on the right side of the airplane.

6. **Inspection Results**

   A. Areas that cause signals to occur that are 40% (or more) of FSH are locations of possible cracks and must be examined more fully as follows:

      (1) Calibrate the instrument again and do the inspection again.

         (a) Compare the signals that occur during the inspection to the signals you got from the reference standard.

   B. To make sure that the clevis lug is cracked, do one of the inspections that follow:

      (1) Calibrate the instrument as specified in Paragraph 4. to examine the clevis lug hole.

         (a) Remove the bolt and washer and do a surface eddy current inspection around the lug hole. Use the eddy current surface probe that is specified in Paragraph 2.C. Make sure you use a circular nonconductive template to keep the probe a constant distance from the edge of the hole.

BOEING PROPRIETARY - Copyright © Unpublished Work - See title page for details

(2) Remove the bolt and bushing and do an open hole eddy current inspection as specified in Part 6, 51-00-00, Procedure 16.

NOTE: It is possible that the horizontal stabilizer will have to be removed to remove the bushing.

NOTE: The diameter of the holes in the upper clevis lugs is 1.312 inch (33.33 mm).

BOEING PROPRIETARY - Copyright © Unpublished Work - See title page for details

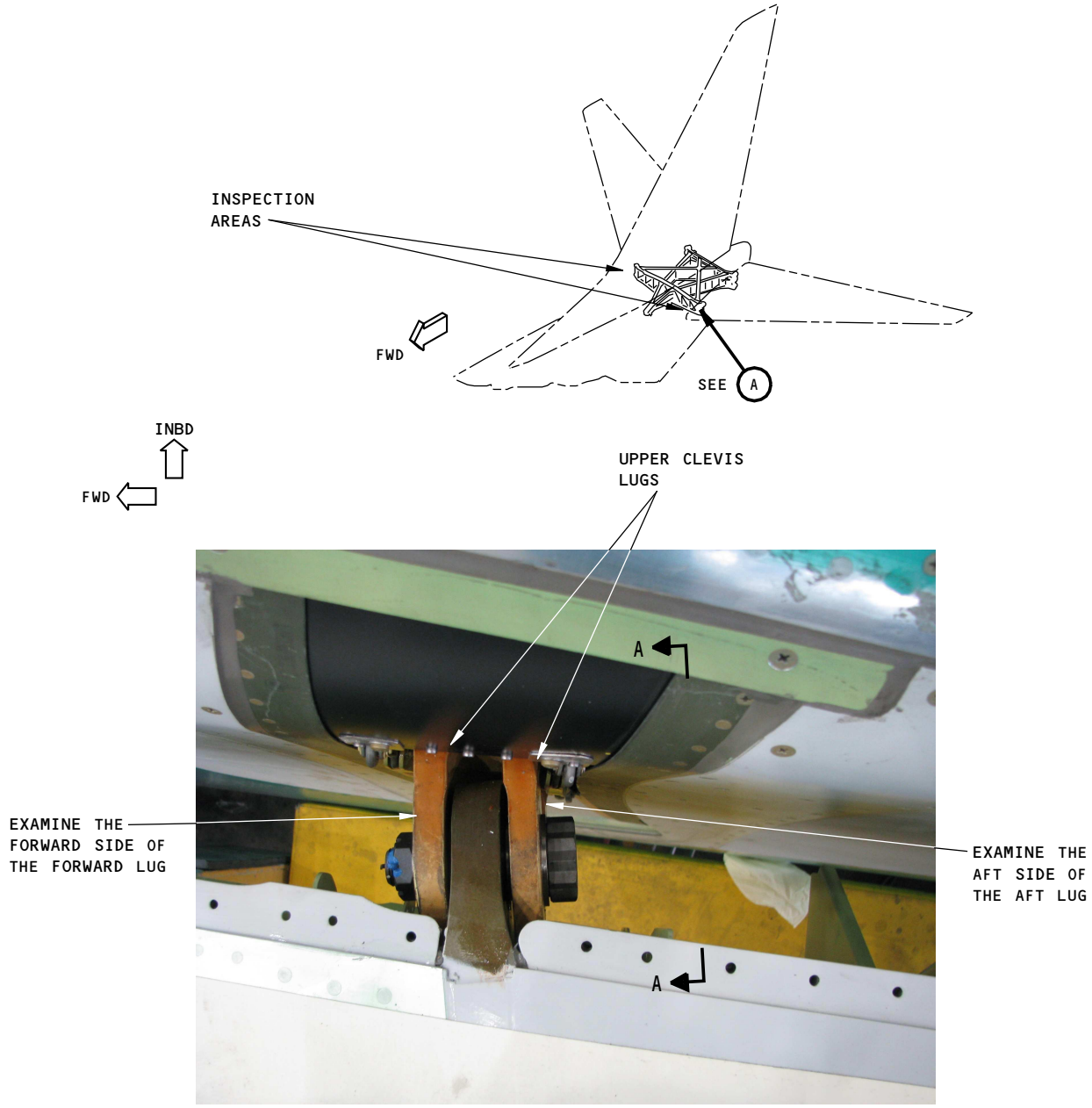

UPPER CLEVIS LUGS ON THE FRONT SPAR OF THE HORIZONTAL STABILIZER CENTER SECTION (THIS VIEW LOOKS DOWN)

A

NOTES:

- THE LEFT SIDE IS SHOWN; THE RIGHT SIDE IS OPPOSITE

2162285 S0000473088_V1

Inspection Areas
Figure 1 (Sheet 1 of 2)

BOEING PROPRIETARY - Copyright © Unpublished Work - See title page for details

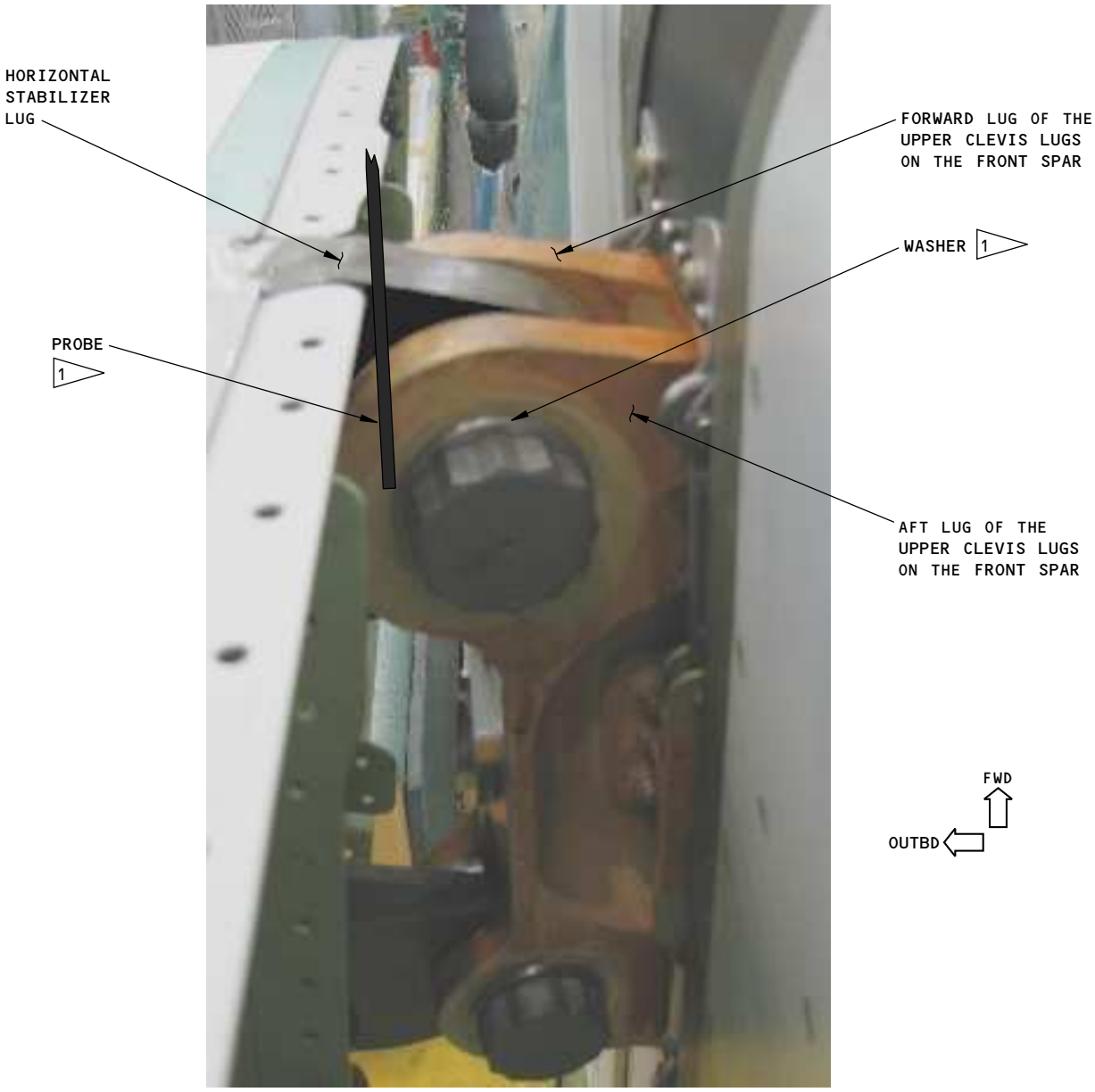

A-A

NOTES:

1 PUT THE PROBE ON THE LUG SO THAT IT IS ADJACENT TO THE WASHER AND SLOWLY MAKE A 360 DEGREE SCAN AROUND THE WASHER.

2162288 S0000473089_V1

Inspection Areas
Figure 1 (Sheet 2 of 2)

BOEING PROPRIETARY - Copyright © Unpublished Work - See title page for details

MAST ARM FITTING OF THE ELEVATOR TAB

1. Purpose

A. Use this high frequency eddy current (HFEC) procedure to find cracks that can occur in the mast arm fitting of the elevator tab. The mast arm fitting is made of aluminum.

B. This procedure examines the four bolt holes on the upper flange of the mast arm fitting. See Figure 1 for the four bolt hole locations.

C. This procedure also examines the bottom areas of the clevis lugs as shown in Figure 1.

D. This procedure uses an impedance plane display instrument.

E. 737 Maintenance Planning Document (MPD) Damage Tolerance Record (DTR) Check Form Reference:

(1) 55-20-08-1

(2) 55-20-08-2

2. Equipment

A. General

(1) Use a high frequency instrument that can be calibrated on the reference standard as specified in Paragraph 4.

(2) Refer to Part 1, 51-01-00, for data about the equipment manufacturers.

B. Instrument

(1) Refer to Part 6, 51-00-00, Procedure 23, for instrument data.

C. Probe

(1) Refer to Part 6, 51-00-00, Procedure 23, for probe data.

(a) To examine the four bolt hole locations, use an MP-70FX flexible probe made by Olympus NDT (or an equivalent). Bend the probe to the correct drop length so that the probe can fit inside the fitting and clear the fastener to make a 360 degree scan around the circumference of the attach fasteners in the upper flange. Use the washer as a probe guide as shown in Part 6, 51-00-00, Procedure 23, Figure 3.

(b) To examine the bottom areas of the clevis lugs, use a small diameter pencil probe.

D. Reference Standard

(1) Refer to Part 6, 51-00-00, Procedure 23, for the reference standard data.

3. Prepare for the Inspection

A. Remove the access panel from the elevator and disconnect the elevator tab control rods as specified in the Aircraft Maintenance Manual (AMM).

B. Remove loose paint, dirt and sealant from the inspection surfaces.

4. Instrument Calibration

A. Calibrate the instrument as specified in Part 6, 51-00-00, Procedure 23, Paragraph 5.

(1) Use reference standard 188A (or an equivalent) as specified in Part 6, 51-00-00, Procedure 23, Paragraph 3.D, to calibrate the instrument to examine the four bolt holes.

BOEING PROPRIETARY - Copyright © Unpublished Work - See title page for details

(2) Use reference standard 126 (or an equivalent) as specified in Part 6, 51-00-00, Procedure 23, Paragraph 3.D, to calibrate the instrument to examine the bottom areas of the clevis lugs.

5. Inspection Procedure

A. Find the inspection areas at the inboard end of the elevator tab on the right side of the airplane.

B. Examine the mast arm fitting of the elevator tab for cracks around the four bolts identified in Figure 1 as specified in Part 6, 51-00-00, Procedure 23, par. 6.

C. Examine the clevis lug inspection areas shown in Figure 1 as specified in Part 6, 51-00-00, Procedure 23, par. 6.

D. Do Paragraph 5.B. and Paragraph 5.C. on the left side of the airplane.

E. Install the elevator tab control rods and access panels as specified in the AMM after the inspection has been completed.

6. Inspection Results

A. Refer to Part 6, 51-00-00, Procedure 23, Paragraph 7, for instructions to help make an analysis of the indications that occur during the inspection.

BOEING PROPRIETARY - Copyright © Unpublished Work - See title page for details

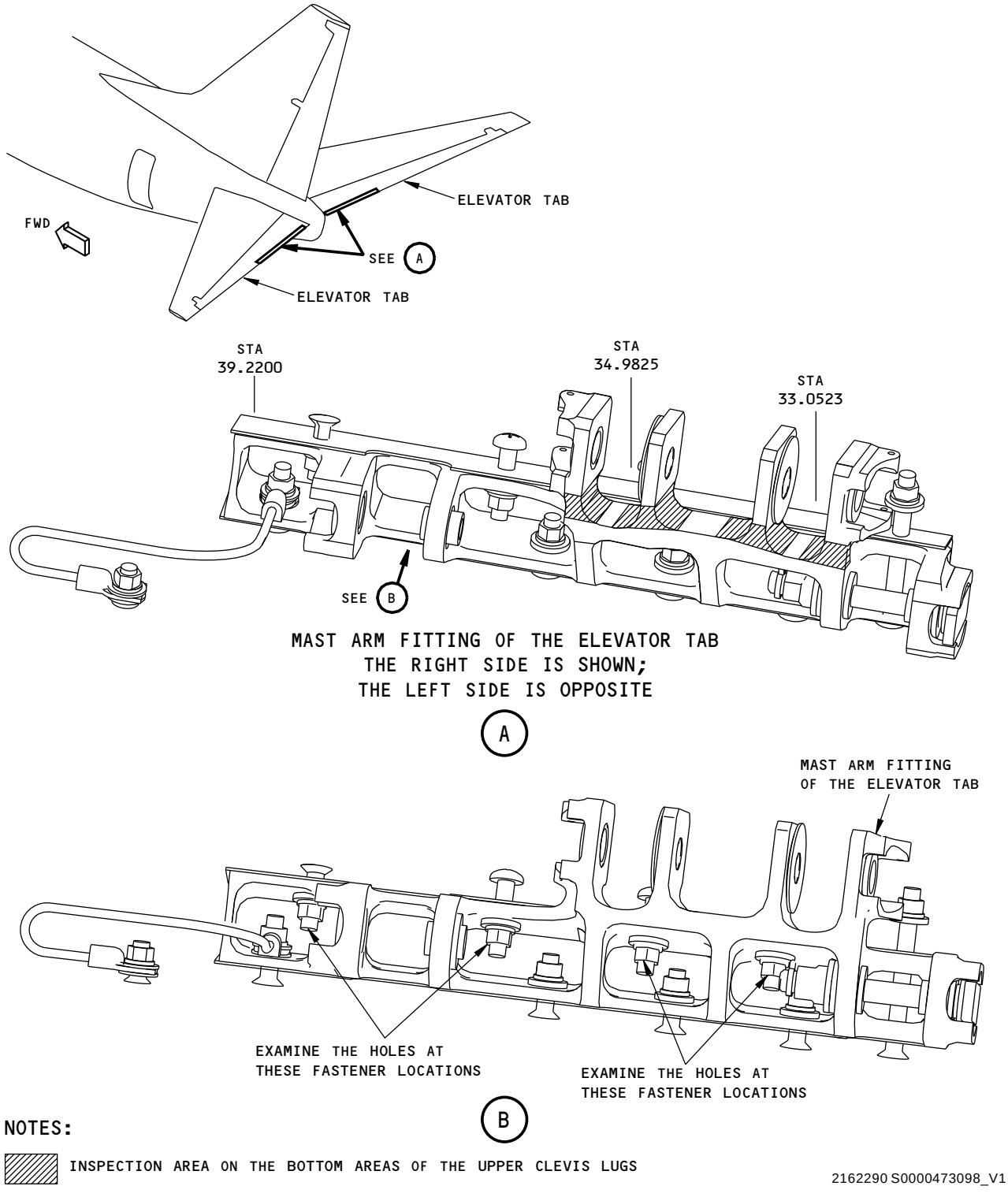

Inspection Areas - Mast Arm Fitting of the Elevator Tab
Figure 1

BOEING PROPRIETARY - Copyright © Unpublished Work - See title page for details

PART 6 - EDDY CURRENT

HORIZONTAL STABILIZER CENTER SECTION - UPPER CHORD OF THE REAR SPAR AT BL 0 AND BETWEEN BL 2.7 AND BL 6.7 (LEFT AND RIGHT) (HFEC)

1. Purpose

A. Use this procedure to help find surface cracks in the titanium rear-spar-upper chord of the horizontal-stabilizer-center section for the 737NG. See Figure 1 for the inspection areas.

B. 737 Damage Tolerance Rating (D626A001-DTR):

(1) Item: 55-10-01-2

2. Equipment

A. General

(1) All eddy current instruments that have an impedance plane display are permitted for use if they can be calibrated on the reference standard as specified in Paragraph 4.

(2) Refer to Part 1, 51-01-00, for data about the equipment manufacturers.

B. Instrument

(1) Use an eddy current instrument that:

(a) Has an impedance plane display.

(b) Operates at a frequency range of 990 kHz to 2 MHz.

(2) The instrument that follows was used to help prepare this procedure.

(a) Nortec 2000D; Olympus NDT

C. Probe

(1) Use a straight or right-angle shielded probe with a maximum diameter of 0.13 inch (3.3 mm). Refer to Part 6, 51-00-00, Procedure 14, paragraph 3.B, for data about probe selection.

(2) The probe that follows was used to help prepare this procedure.

(a) MTF902-60B; NDT Engineering Corp (Olympus)

D. Reference Standards

(1) Use reference standard 1004, or an equivalent, as given in Part 6, 51-00-00, Procedure 14, Figure 6.

3. Prepare for the Inspection

A. Get access to the inspection area (see Figure 1).

B. Remove loose paint, dirt and sealant from the surface of the inspection areas as necessary.

4. Instrument Calibration

A. Calibrate the equipment with reference standard 1004, or an equivalent, as specified in Part 6, 51-00-00, Procedure 14, paragraph 5.

5. Inspection Procedure

A. Examine the upper chord for cracks at the nine fastener holes identified in Figure 1 as follows:

(1) Calibrate the instrument as specified in Paragraph 4.

BOEING PROPRIETARY - Copyright © Unpublished Work - See title page for details

(2) Make a 360 degree scan around each fastener shown by flagnote 1 in Figure 1 as specified in Part 6, 51-00-00, Procedure 14, paragraph 6.

6. Inspection Results

A. See Part 6, 51-00-00, Procedure 14, paragraph 7, for instructions to help make an analysis of signals that occur during the inspection.

BOEING PROPRIETARY - Copyright © Unpublished Work - See title page for details

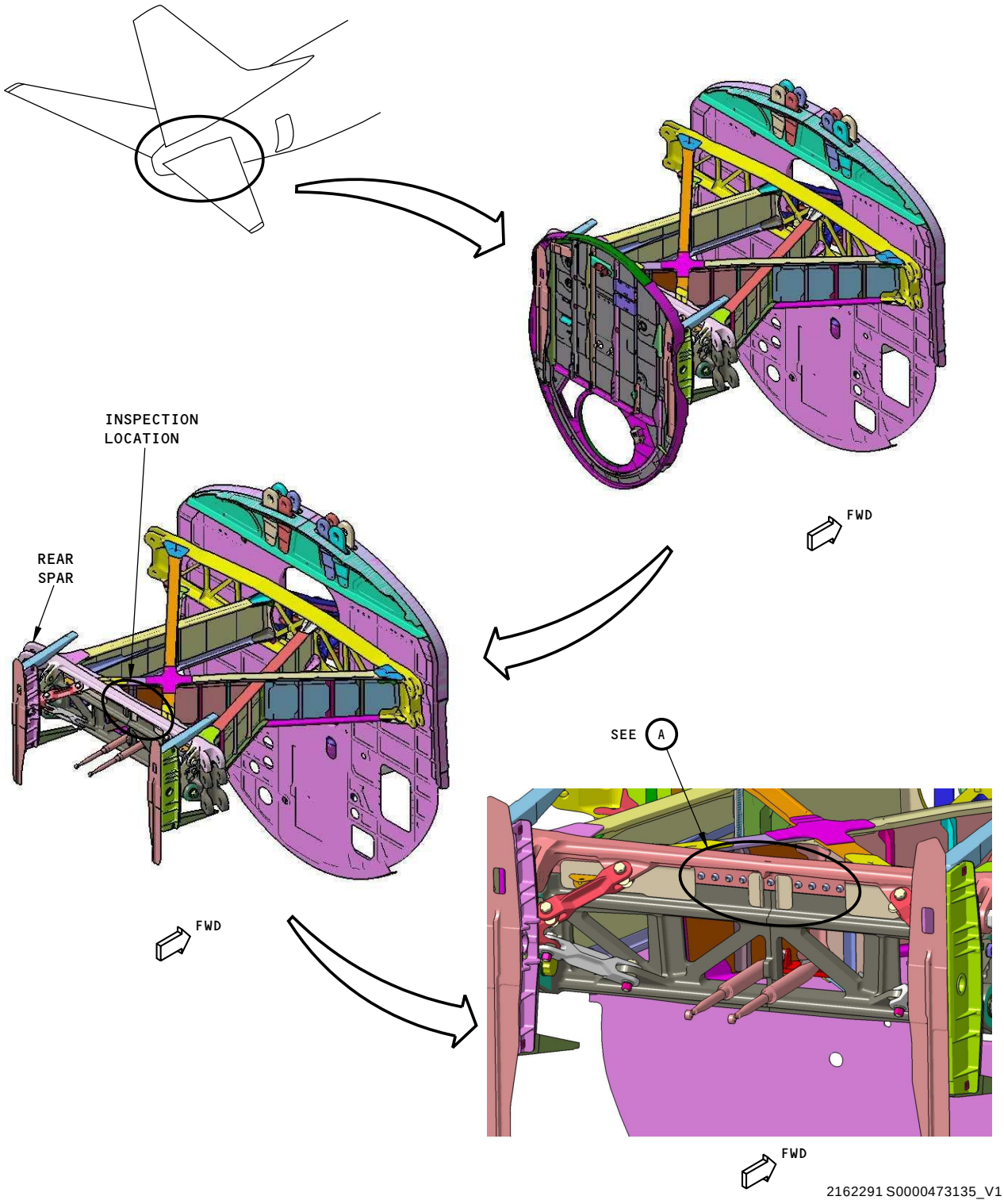

Inspection Areas
Figure 1 (Sheet 1 of 2)

BOEING PROPRIETARY - Copyright © Unpublished Work - See title page for details

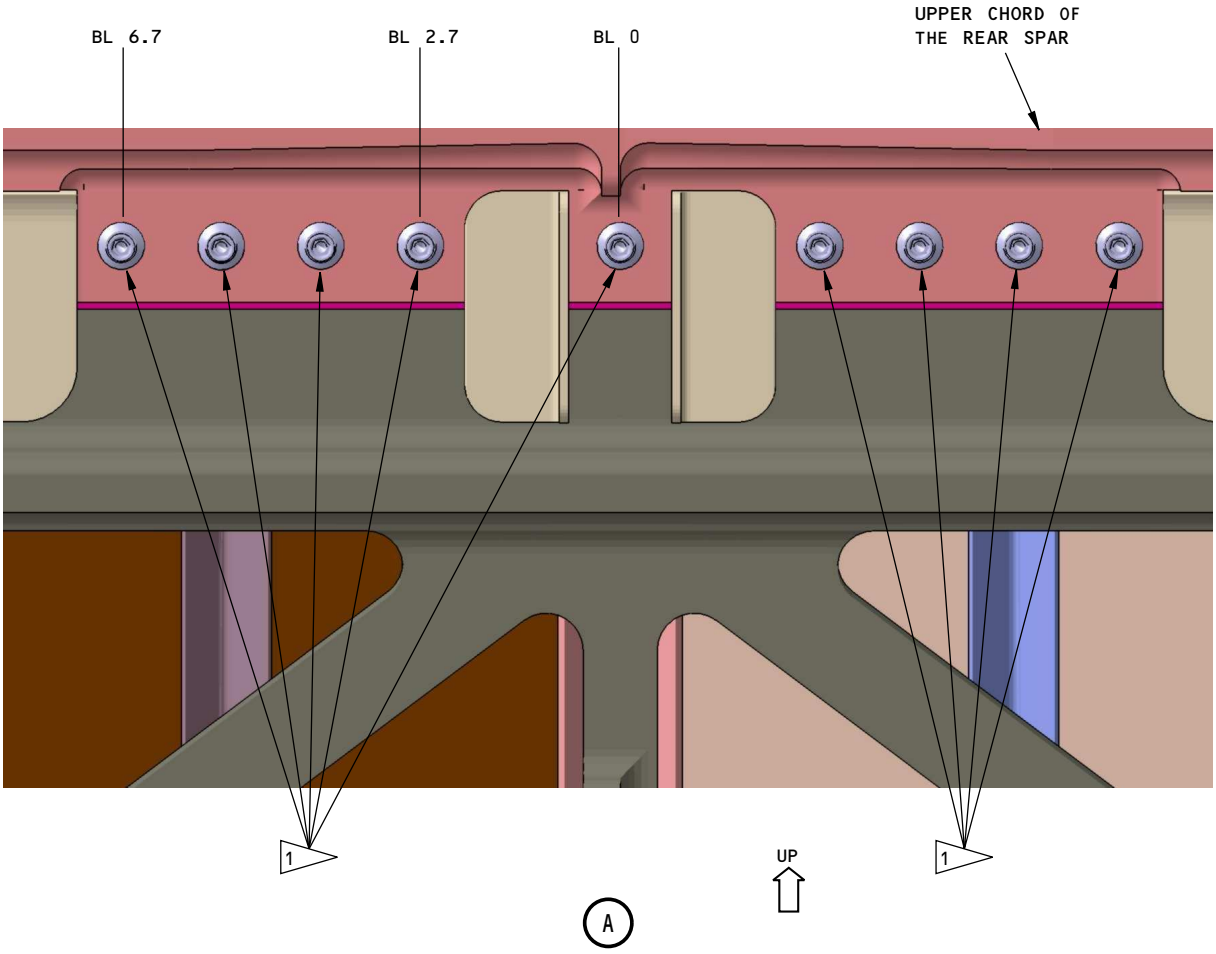

NOTES:

1 DTR CHECK FORM ITEM 55-10-01-2 INSPECTION AREA. THERE ARE 9 FASTENER HOLES TO EXAMINE FOR CRACKS. MOVE THE PROBE 360 DEGREES AROUND THE FASTENERS.

2162292 S0000473136_V1

Inspection Areas
Figure 1 (Sheet 2 of 2)

BOEING PROPRIETARY - Copyright © Unpublished Work - See title page for details

PART 6 - EDDY CURRENT

HORIZONTAL STABILIZER - TERMINAL FITTING ADJACENT TO THE UPPER CHORD OF THE REAR SPAR

1. Purpose

A. Use this procedure to examine the terminal fitting for cracks. The terminal fitting is attached to the upper chord of the rear spar of the horizontal stabilizer. See Figure 1 for the inspection areas.

B. This procedure uses an impedance plane display instrument.

C. The terminal fitting is made from titanium

D. 737 Damage Tolerance Rating (D626A001-DTR):

(1) Item: 55-10-05-2

2. Equipment

A. General

(1) Use inspection equipment that can be calibrated on the reference standard as specified in Part 6, 51-00-00, Procedure 14, paragraph 5.

(2) Refer to Part 1, 51-01-00, for data about the equipment manufacturers.

B. Instrument

(1) Use an eddy current instrument that:

(a) Has an impedance plane display.

(b) Operates from 990 kHz to 2 MHz.

(2) Refer to Part 6, 51-00-00, Procedure 14, paragraph 3.A, for the instrument data.

C. Probe

(1) Use a probe that:

(a) Operates in a frequency range from 990 kHz to 2 MHz.

(b) Has a diameter of 0.125 inch (3.18 mm).

(c) Is shielded.

(2) The probe that follows was used to help prepare this procedure.

(a) TPEN92-5B; Techna NDT

D. Reference Standard

(1) Use reference standard 1004 as specified in Part 6, 51-00-00, Procedure 14, paragraph 3.C.

3. Prepare for the Inspection

A. Identify and get access to all of the inspection areas. See Figure 1.

B. Clean the inspection surfaces.

(1) Remove dirt or grease from the inspection surfaces.

(2) Remove paint only if it is loose.

(3) Remove sealant from the areas that the probe will touch.

BOEING PROPRIETARY - Copyright © Unpublished Work - See title page for details

C. Refer to Part 6, 51-00-00, Procedure 14, paragraph 4, for more instructions to help prepare for the inspection.

4. Instrument Calibration

A. Calibrate the instrument as specified in Part 6, 51-00-00, Procedure 14, paragraph 5.

(1) Use reference standard 1004, or an equivalent, as specified in Part 6, 51-00-00, Procedure 14, paragraph 5.

5. Inspection Procedure

A. Get access to the inspection areas shown in Figure 1.

B. Refer to the inspection procedure in Part 6, 51-00-00, Procedure 14, paragraph 6, to examine around the two inboard fasteners that go through the terminal fitting and the upper chord.

C. Make a scan around the fastener head or collar on the forward and aft sides of the terminal fitting as shown in Figure 1.

D. Do a check of the instrument/probe as specified in Part 6, 51-00-00, Procedure 14, paragraph 6.E.

E. Do Paragraph 5.B. thru Paragraph 5.D. again to examine the terminal fitting on the other side of the airplane.

6. Inspection Results

A. Refer to Part 6, 51-00-00, Procedure 14, paragraph 7, for instructions to help make an analysis of the indications found during the inspection.

BOEING PROPRIETARY - Copyright © Unpublished Work - See title page for details

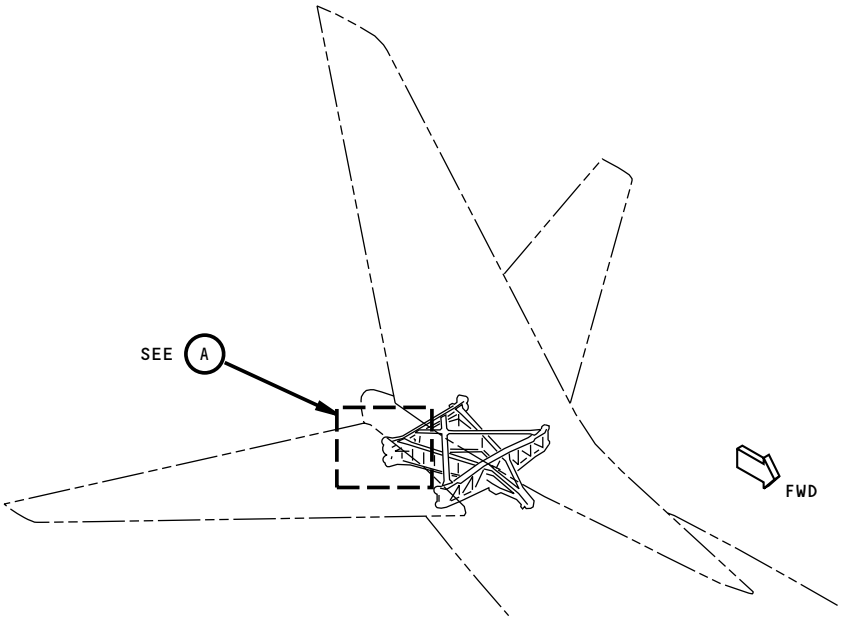

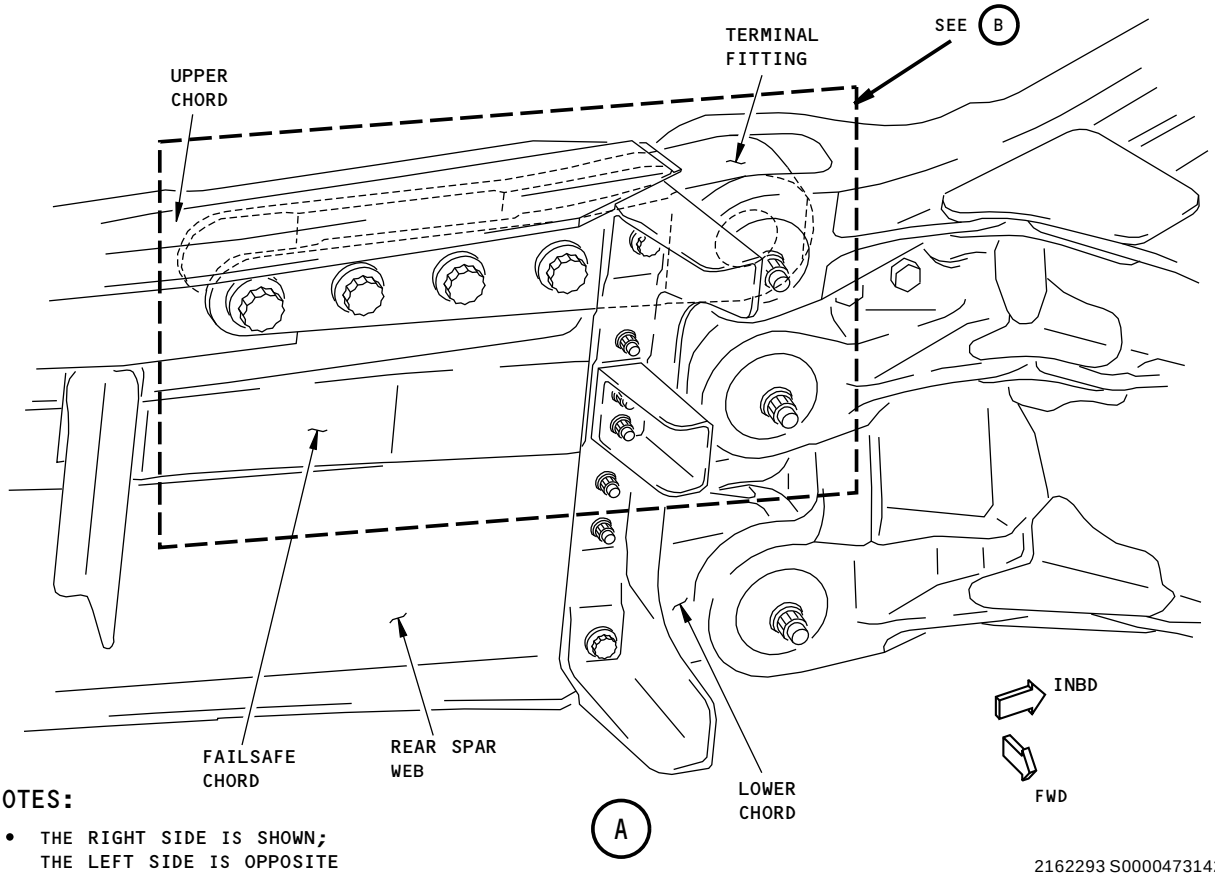

NOTES:

- THE RIGHT SIDE IS SHOWN; THE LEFT SIDE IS OPPOSITE

2162293 S0000473142_V1

Inspection Areas
Figure 1 (Sheet 1 of 2)

BOEING PROPRIETARY - Copyright © Unpublished Work - See title page for details

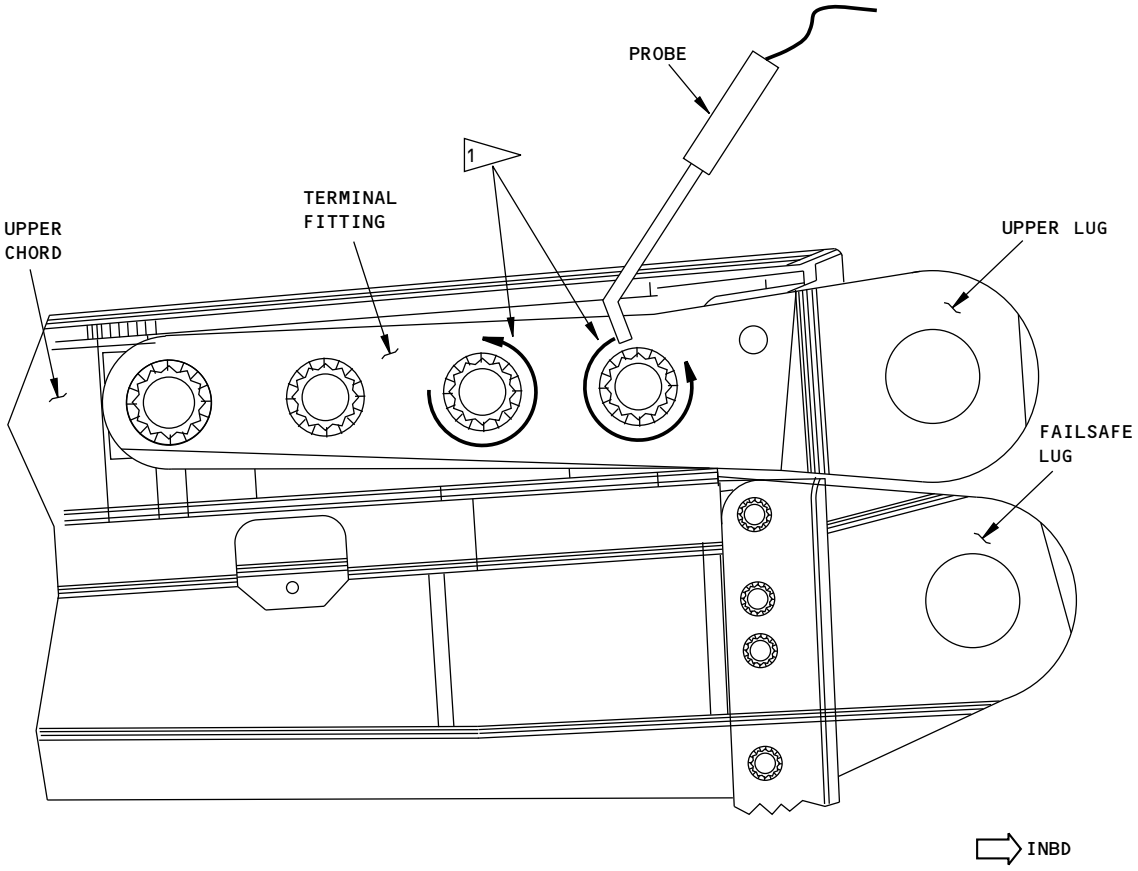

THE FORWARD SIDE IS SHOWN; THE AFT SIDE IS ALMOST THE SAME

B

NOTES:

- IT IS NECESSARY TO EXAMINE THE FORWARD AND AFT SIDES OF THE TERMINAL FITTING
- IT IS NECESSARY TO EXAMINE THE TERMINAL FITTING ON THE LEFT AND RIGHT SIDES OF THE AIRPLANE.

1 FASTENER LOCATION TO BE EXAMINED. MAKE A 360 DEGREE SCAN AROUND THE FASTENER AT THESE LOCATIONS. USE THE COLLAR OR FASTENER HEAD AS A PROBE GUIDE.

2162298 S0000473143_V1

Inspection Areas
Figure 1 (Sheet 2 of 2)

BOEING PROPRIETARY - Copyright © Unpublished Work - See title page for details

PART 6 - EDDY CURRENT

HORIZONTAL STABILIZER CENTER SECTION - PIVOT AND LOWER LUGS OF THE HINGE FITTINGS AT THE REAR SPAR

1. Purpose

A. Use this high frequency eddy current (HFEC) procedure to examine the pivot and lower lugs of the hinge fittings for cracks. The hinge fittings are at the rear spar of the horizontal stabilizer center section. See Figure 1 for the inspection areas.

B. This procedure uses an impedance plane display instrument.

C. The hinge fittings are made from titanium.

D. 737 Damage Tolerance Rating (D622N001-DTR):

(1) Item: 55-10-02-1

(2) Item: 55-10-02-2

2. Equipment

A. General

(1) Use inspection equipment that can be calibrated on the reference standard as specified in Part 6, 51-00-00, Procedure 14, paragraph 5.

(2) Refer to Part 1, 51-01-00, for data about the equipment manufacturers.

B. Instrument

(1) Use an instrument that operates between 990 kHz and 2 MHz.

(2) Refer to Part 6, 51-00-00, Procedure 14, paragraph 3.A, for the instrument data.

C. Probe

(1) Use a probe that:

(a) Operates in a frequency range from 990 kHz to 2 MHz.

(b) Has a diameter of 0.125 inch (3.18 mm).

(c) Is flexible.

(d) Is shielded.

(e) Has a minimum shaft length of 6 inches (152.4 mm).

(f) Has minimum drop of 0.1 inch (2.54 mm) and a maximum drop of 0.2 inch (5.08 mm).

(2) The probe that follows was used to help prepare this procedure.

(a) TPENFLX91-8/2M; Techna NDT

D. Reference Standard

(1) Use reference standard 1002 as specified in Part 6, 51-00-00, Procedure 14, paragraph 3.C.

3. Prepare for the Inspection

A. Identify and get access to all the inspection areas.

(1) Get access to examine the upper surfaces of the pivot and lower lugs of the hinge fittings as follows:

(a) Put the horizontal stabilizer in the full down position and lock the controls.

BOEING PROPRIETARY - Copyright © Unpublished Work - See title page for details

(b) Get access through access door P-25 and across the top of the horizontal stabilizer truss.

(2) Get access to examine the lower surfaces of the pivot and lower lugs of the hinge fittings as follows:

(a) Put the horizontal stabilizer in the full up position and lock the controls.

(b) Get access through access door P-25 and below the horizontal stabilizer truss.

B. Remove the gap covers, track and sliding seals.

C. Clean the inspection surfaces.

(1) Remove dirt or grease from the inspection surfaces.

(2) Remove paint only if loose.

(3) Remove sealant from the areas that the probe will touch.

D. Refer to Part 6, 51-00-00, Procedure 14, paragraph 4, for more instructions to help prepare for the inspection.

4. Instrument Calibration

A. Calibrate the instrument as specified in Part 6, 51-00-00, Procedure 14, paragraph 5.

(1) Use reference standard 1002, or an equivalent, as specified in Part 6, 51-00-00, Procedure 14, paragraph 5.

5. Inspection Procedure

A. Get access to the inspection areas shown in Figure 1.

B. Examine the pivot and lower lugs of the hinge fitting for cracks as specified in Part 6, 51-00-00, Procedure 14, paragraph 6, and as follows:

(1) Make a scan along the outer edges of the pivot lug of the hinge fitting as shown in Figure 1.

(2) Make a scan along the inner edges of the pivot lug plates at the faying surface of the two part assembly as shown in Figure 1.

(3) Make a scan along the outer edges of the lower lug as shown in Figure 1.

(4) Make a scan along the inner edges of the lower lug at the faying surface of the two part assembly as shown in Figure 1.

C. Do a check of the instrument/probe as specified in Part 6, 51-00-00, Procedure 14, paragraph 6.E.

D. Do Paragraph 5.B. and Paragraph 5.C. again to examine the hinge fitting on the other side of the airplane for cracks.

6. Inspection Results

A. Refer to Part 6, 51-00-00, Procedure 14, paragraph 7, for instructions to help make an analysis of the indications that occur during the inspection.

BOEING PROPRIETARY - Copyright © Unpublished Work - See title page for details

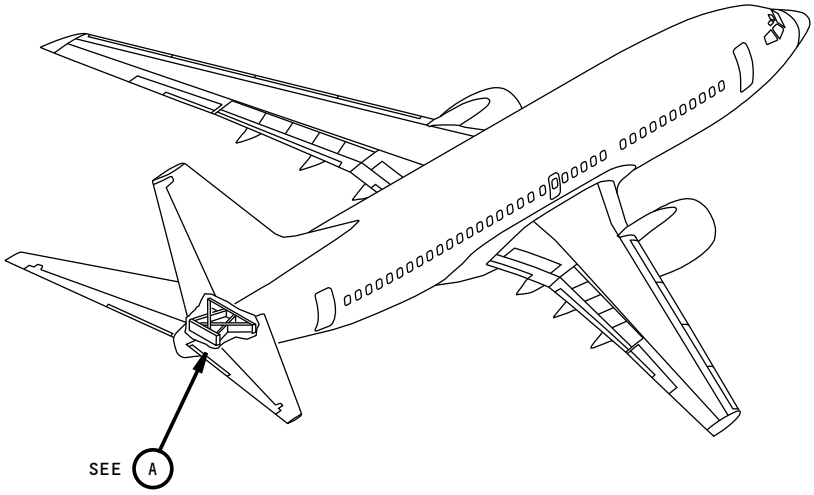

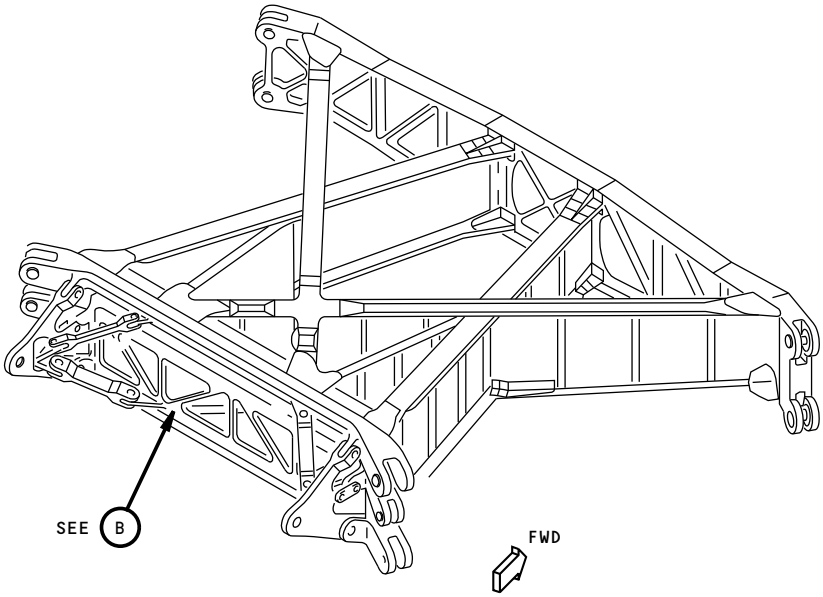

HORIZONTAL STABILIZER CENTER SECTION

A

2162304 S0000473145_V1

Inspection Areas
Figure 1 (Sheet 1 of 3)

BOEING PROPRIETARY - Copyright © Unpublished Work - See title page for details

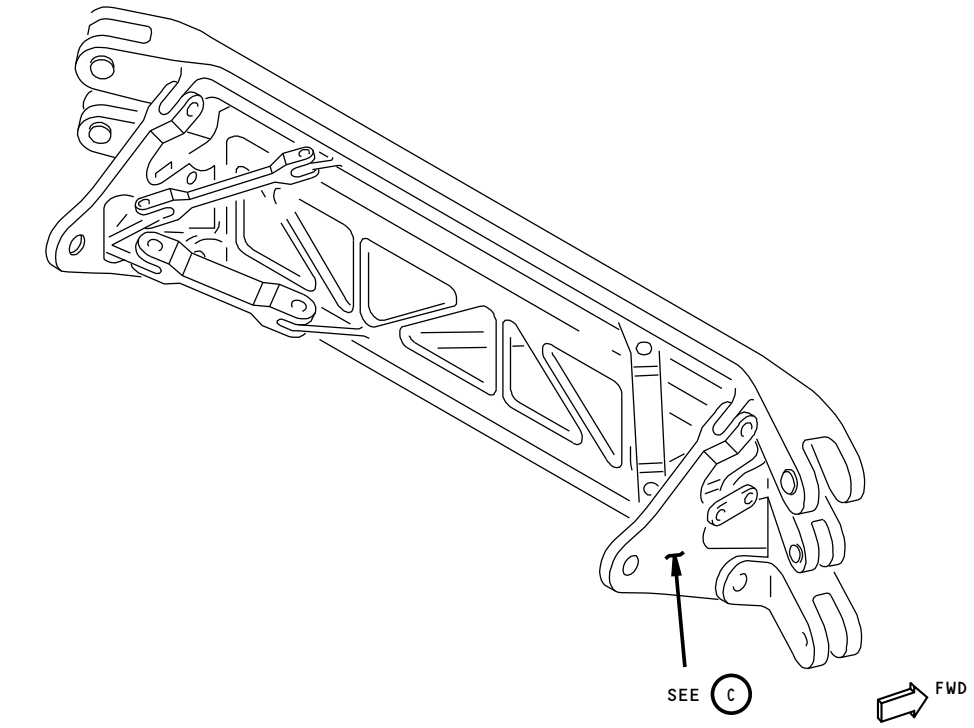

REAR SPAR OF THE HORIZONTAL STABILIZER CENTER SECTION

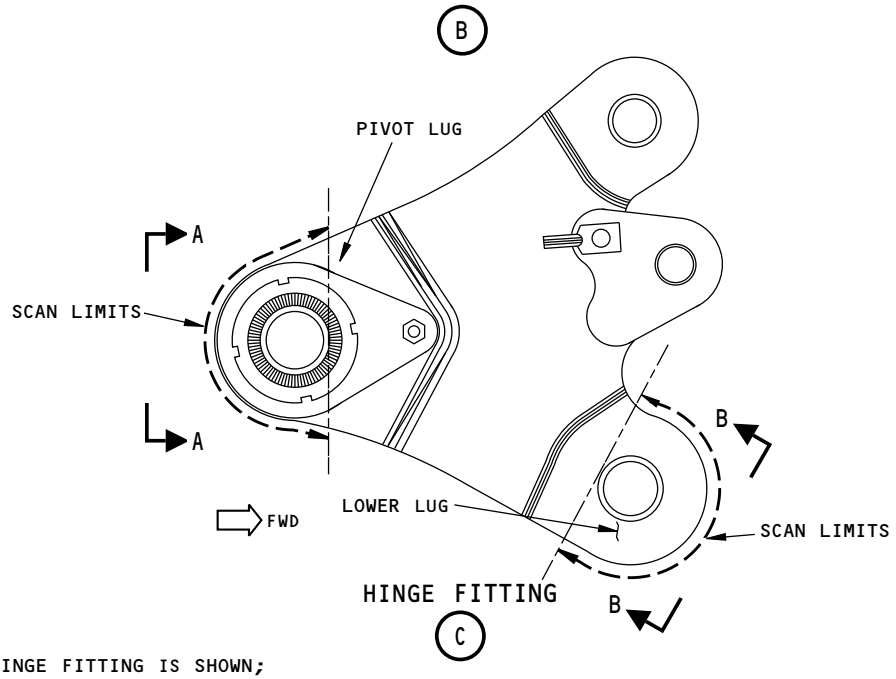

NOTES:

- THE RIGHT HINGE FITTING IS SHOWN; THE LEFT HINGE FITTING IS OPPOSITE

2162305 S0000473146_V1

Inspection Areas
Figure 1 (Sheet 2 of 3)

BOEING PROPRIETARY - Copyright © Unpublished Work - See title page for details

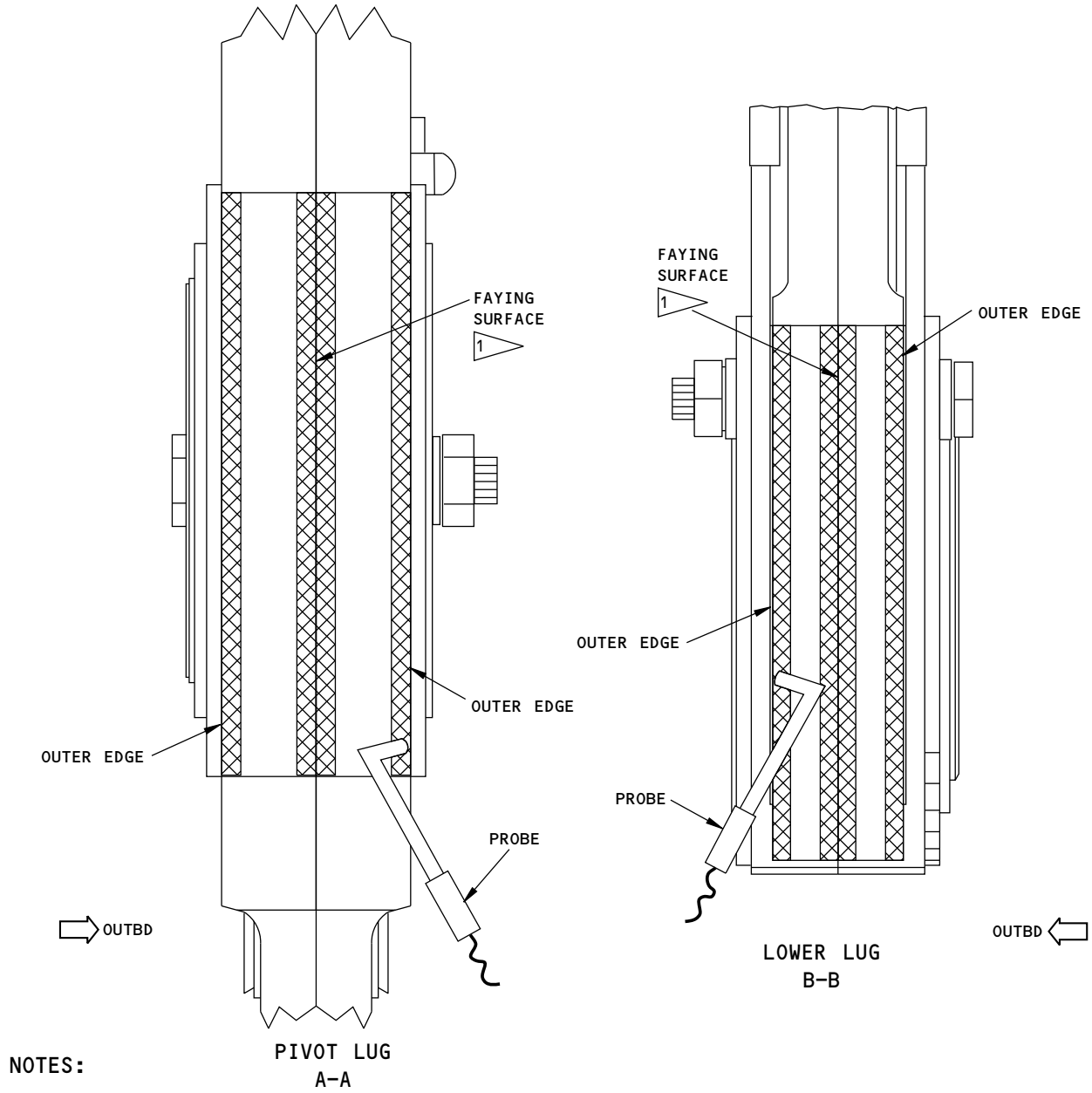

NOTES:

AREA TO BE EXAMINED

1 IT IS NECESSARY TO EXAMINE THE OUTER EDGES OF THE LUGS AND THE INNER EDGES AT THE FAYING SURFACE. KEEP THE PROBE COIL A CONSTANT DISTANCE FROM THE EDGES TO BE EXAMINED.

2162306 S0000473147_V1

Inspection Areas
Figure 1 (Sheet 3 of 3)

BOEING PROPRIETARY - Copyright © Unpublished Work - See title page for details

PART 6 - EDDY CURRENT

UPPER AND LOWER SPLICE PLATES AT THE THRUST-BEAM-TO-THRUST-BEAM JOINTS

1. Purpose

A. Use this procedure to help find cracks that can start at the fastener holes of the upper and lower splice plates in the thrust-beam-to-thrust-beam joints. The areas to examine are identified in Figure 1.

B. 737 Damage Tolerance Rating (D626A001-DTR):

(1) Item: 55-10-14-7

2. Equipment

A. General

(1) Use inspection equipment that can be calibrated on the reference standard as specified in Paragraph 4.

(2) Refer to Part 1, 51-01-00, for data about the equipment manufacturers.

B. Instrument

(1) Use an eddy current instrument that:

(a) Has an impedance plane display.

(b) Operates at a frequency range of 50 to 500 kHz.

(2) The instruments that follow were used to help prepare this procedure.

(a) Nortec 500; Olympus NDT

C. Probes

(1) A shielded, right-angle probe with a maximum drop of 0.5 inch (13 mm) is necessary for this inspection.

(2) Refer to Part 6, 51-00-00, Procedure 23, paragraph 3.C, for data about probe selection.

(3) The probe that follows was used to help prepare this procedure.

(a) Probe MP905-40; NDT Engineering Corp (Olympus)

D. Reference Standards

(1) Use reference standard 188A, or an equivalent, as given in Part 6, 51-00-00, Procedure 23, paragraph 3.D.

3. Prepare for the Inspection

A. Get access to the inspection areas and identify the fastener locations to examine. Refer to Figure 1.

B. Remove the sealant that is around the head and collar of each fastener and on the inspection surface. The sealant must be replaced after the inspections are completed.

C. The horizontal stabilizer must be moved to the fully down position to get access to the lower thrust-beam-to-thrust-beam joint.

4. Instrument Calibration

A. Calibrate the equipment as specified in Part 6, 51-00-00, Procedure 23, paragraph 5. Use reference standard 188A, or an equivalent, for the calibration.

BOEING PROPRIETARY - Copyright © Unpublished Work - See title page for details

5. **Inspection Procedure**

A. Examine each fastener location for cracks as specified in Part 6, 51-00-00, Procedure 23, paragraph 6, and as follows:

(1) Keep the probe lightly against the head or collar and make a 360 degree scan around the fastener.

(2) Do Paragraph 5.A.(1) at each fastener in the inspection areas identified in Figure 1.

6. **Inspection Results**

A. Refer to Part 6, 51-00-00, Procedure 23, paragraph 7, to help make an analysis of indications that occur during the inspection.

BOEING PROPRIETARY - Copyright © Unpublished Work - See title page for details

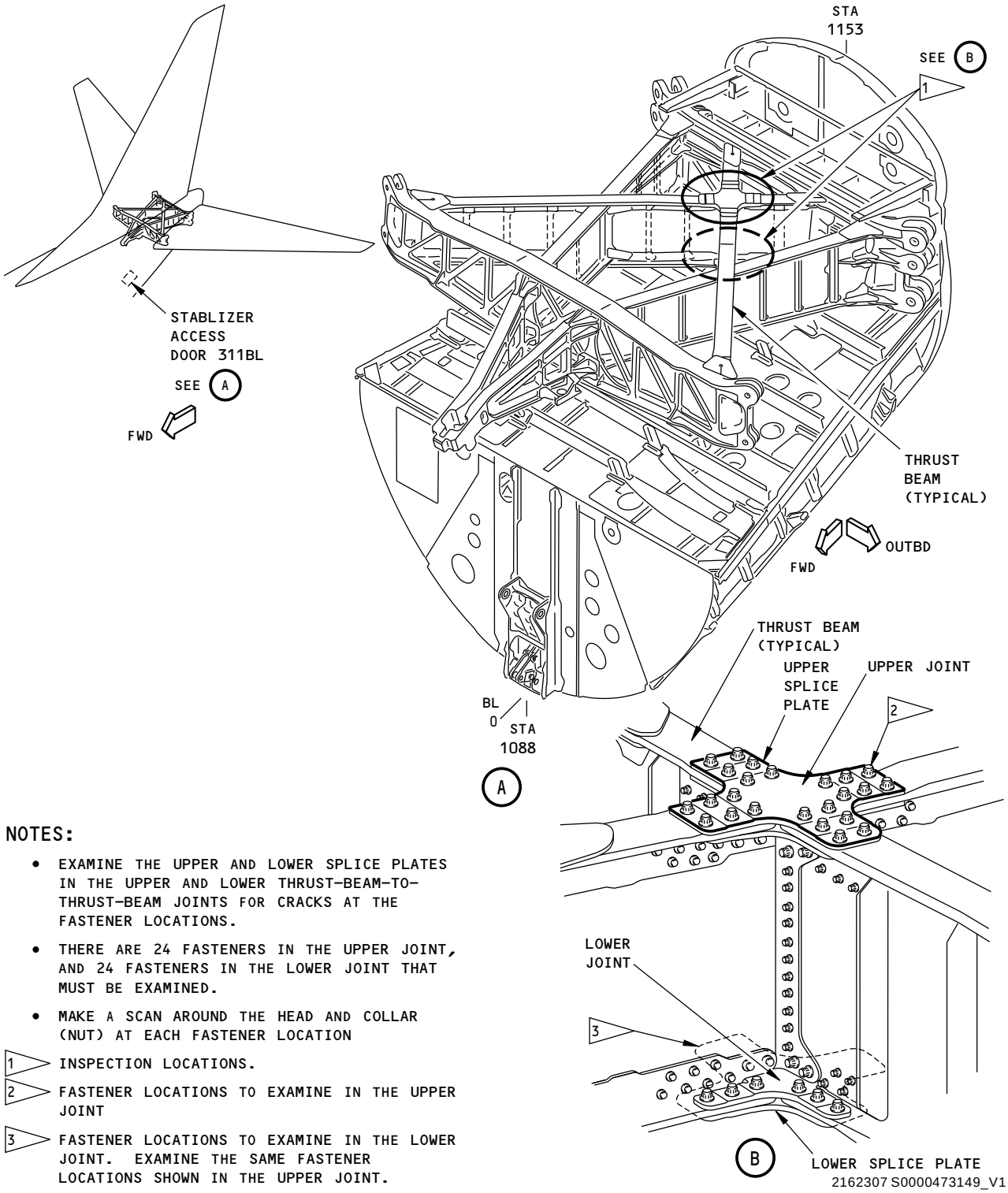

NOTES:

- EXAMINE THE UPPER AND LOWER SPLICE PLATES IN THE UPPER AND LOWER THRUST-BEAM-TO-THRUST-BEAM JOINTS FOR CRACKS AT THE FASTENER LOCATIONS.
- THERE ARE 24 FASTENERS IN THE UPPER JOINT, AND 24 FASTENERS IN THE LOWER JOINT THAT MUST BE EXAMINED.
- MAKE A SCAN AROUND THE HEAD AND COLLAR (NUT) AT EACH FASTENER LOCATION

1 INSPECTION LOCATIONS.

2 FASTENER LOCATIONS TO EXAMINE IN THE UPPER JOINT

3 FASTENER LOCATIONS TO EXAMINE IN THE LOWER JOINT. EXAMINE THE SAME FASTENER LOCATIONS SHOWN IN THE UPPER JOINT.

Inspection Areas
Figure 1

BOEING PROPRIETARY - Copyright © Unpublished Work - See title page for details

PART 6 - EDDY CURRENT

UPPER CHORD TERMINAL FITTING AT THE REAR SPAR OF THE HORIZONTAL STABILIZER

1. Purpose

A. Use this procedure to examine the upper chord terminal fitting at the rear spar of the horizontal stabilizer for cracks that can grow from the bore of the terminal fitting lug. See Figure 1 for the inspection areas.

B. This procedure uses an impedance plane display instrument.

C. The terminal fitting is made from titanium.

D. 737 Damage Tolerance Rating (D626A001-DTR):

(1) Item: 55-10-05-1

2. Equipment

A. General

(1) Use inspection equipment that can be calibrated on the reference standard as specified in Part 6, 51-00-00, Procedure 14, paragraph 5.

(2) Refer to Part 1, 51-01-00, for data about the equipment manufacturers.

B. Instrument

(1) Use an eddy current instrument that:

(a) Has an impedance plane display.

(b) Operates from 990 kHz to 2 MHz.

(2) Refer to Part 6, 51-00-00, Procedure 14, paragraph 3.A, for the instrument data.

C. Probes

(1) Use a probe that:

(a) Operates in a frequency range from 990 kHz to 2 MHz.

(b) Has a diameter of 0.125 inch (3.18 mm).

(c) Is shielded.

(d) Is flexible.

(e) Has a minimum shaft length of 6.0 inches (152.0 mm).

(f) Has a minimum drop of 0.10 inch (2.5 mm) and a maximum drop of 0.25 inch (6.4 mm).

(2) The probe that follows was used to help prepare this procedure.

(a) TPENFLX925-8/2M; Techna NDT

D. Reference Standard

(1) Use reference standard 1002 as specified in Part 6, 51-00-00, Procedure 14, paragraph 3.C.

3. Prepare for the Inspection

A. Identify and get access to the inspection areas. See Figure 1.

B. Remove the gap covers.

C. Clean the inspection surfaces.

BOEING PROPRIETARY - Copyright © Unpublished Work - See title page for details

(1) Remove dirt or grease from the inspection surfaces.

(2) Remove paint only if it is loose.

(3) Remove sealant from the areas that the probe will touch.

D. Refer to Part 6, 51-00-00, Procedure 14, paragraph 4, for more instructions to help prepare for the inspection.

4. Instrument Calibration

A. Calibrate the instrument as specified in Part 6, 51-00-00, Procedure 14, paragraph 5.

(1) Use reference standard 1002, or an equivalent, as specified in Part 6, 51-00-00, Procedure 14, paragraph 5.

5. Inspection Procedure

A. Get access to the inspection areas shown in Figure 1.

B. Examine the forward and aft edges of the terminal fitting lug for cracks at the upper chord of the horizontal stabilizer rear spar as shown in Figure 1.

(1) Refer to Part 6, 51-00-00, Procedure 14, paragraph 6 for the inspection procedure.

C. Do a check of the instrument/probe as specified in Part 6, 51-00-00, Procedure 14, paragraph 6.E.

D. Do Paragraph 5.A. thru Paragraph 5.C. on the other side of the airplane.

6. Inspection Results

A. Refer to Part 6, 51-00-00, Procedure 14, paragraph 7, for instructions to help make an analysis of the indications found during the inspection.

BOEING PROPRIETARY - Copyright © Unpublished Work - See title page for details

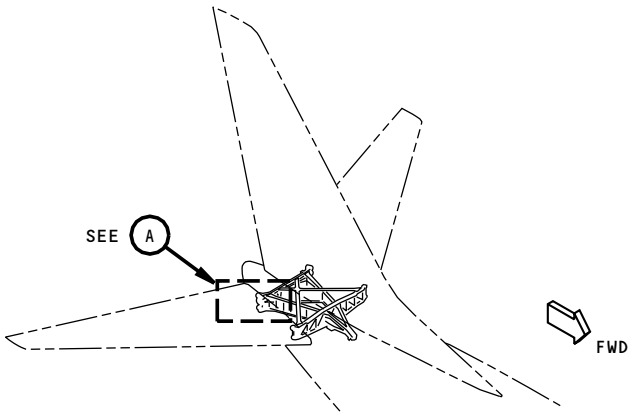

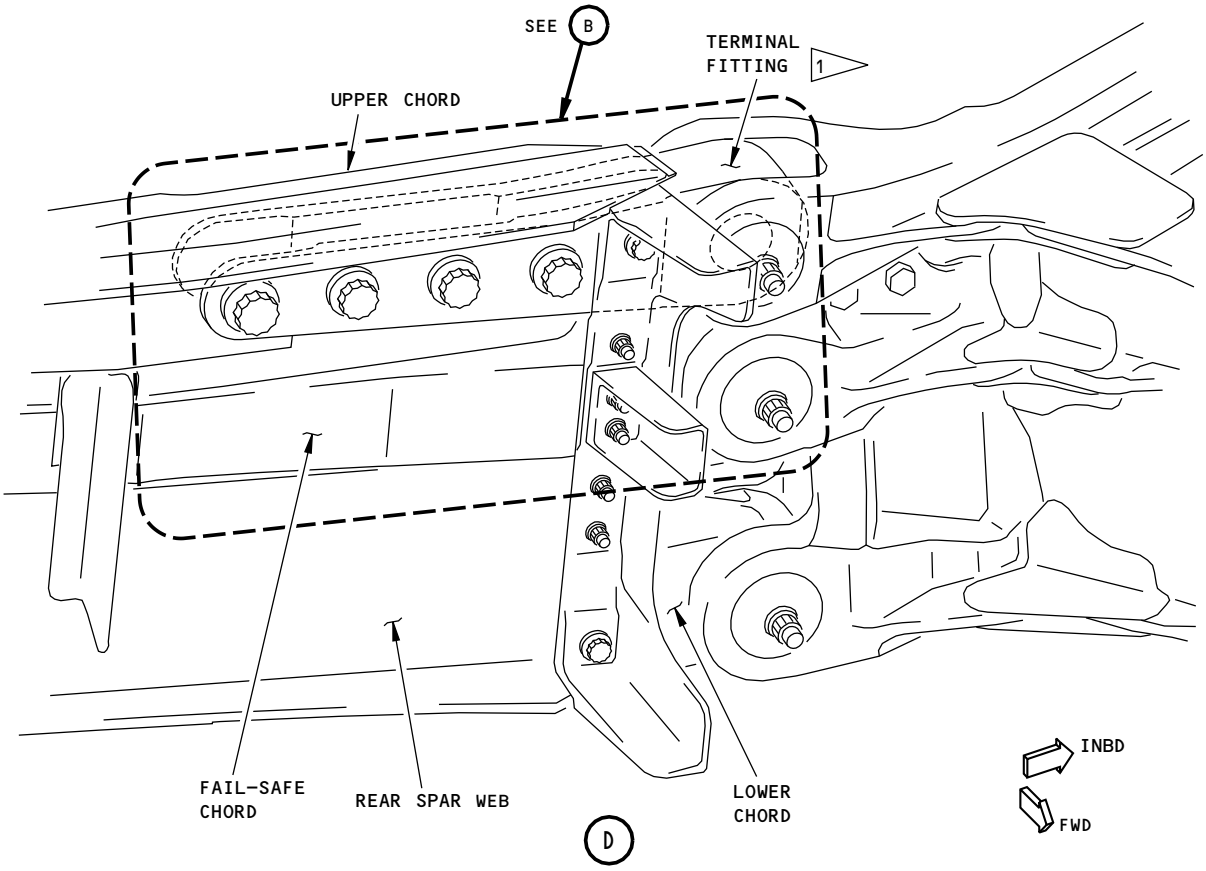

NOTES:

- THE RIGHT SIDE IS SHOWN; THE LEFT SIDE IS OPPOSITE

1 TERMINAL FITTING TO BE EXAMINED FOR CRACKS

2162321 S0000473155_V1

Inspection Areas
Figure 1 (Sheet 1 of 2)

BOEING PROPRIETARY - Copyright © Unpublished Work - See title page for details

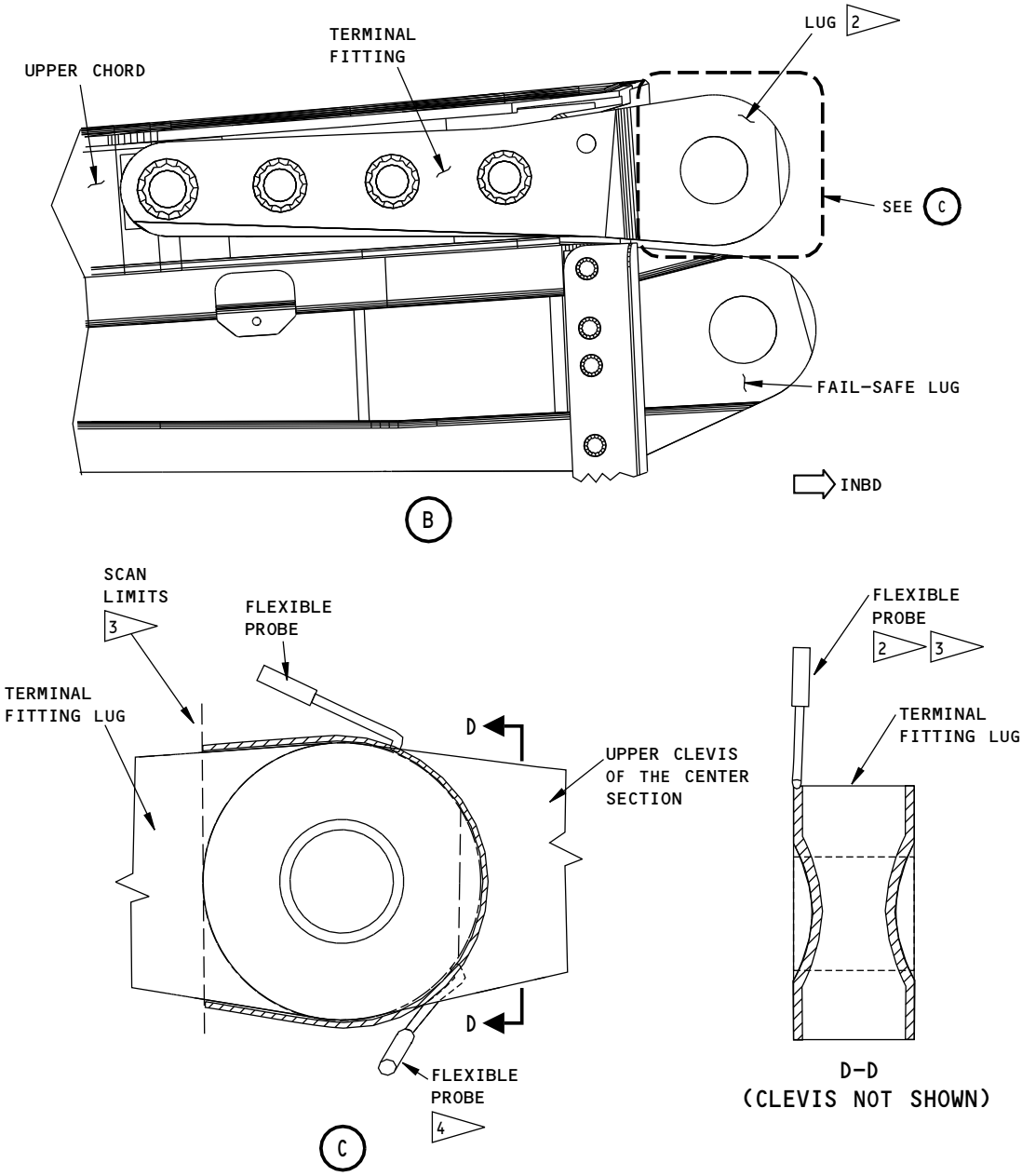

NOTES:

AREA TO EXAMINE

2 IT IS NECESSARY TO EXAMINE THE FORWARD AND AFT EDGES OF THE TERMINAL FITTING LUG.

3 DO A SCAN AT THE EDGES OF THE LUG TO THE SCAN LIMITS SHOWN. KEEP THE COIL OF THE EDDY CURRENT PROBE AT A CONSTANT DISTANCE FROM THE EDGE OF THE TERMINAL FITTING LUG DURING THE SCAN.

4 IT CAN BE NECESSARY TO BEND THE FLEXIBLE SHAFT APPROXIMATELY 90 DEGREES TO MAKE A SCAN AT THIS LOCATION.

2162322 S0000473157_V1

Inspection Areas
Figure 1 (Sheet 2 of 2)

BOEING PROPRIETARY - Copyright © Unpublished Work - See title page for details

PART 6 - EDDY CURRENT

HORIZONTAL STABILIZER CENTER SECTION - UPPER CHORD OF THE REAR SPAR - BL 8.1 TO BL 19.7 (ON THE LEFT AND RIGHT SIDES OF THE AIRPLANE)

1. Purpose

A. Use this open hole eddy current procedure to find cracks in the titanium upper chord of the horizontal stabilizer center section.

B. It is necessary to remove the fasteners to do this inspection. The fastener holes to examine are shown in Figure 1.

C. 737 Damage Tolerance Rating (D626A001-DTR):

(1) Item: 55-10-01-3

2. Equipment

A. General

(1) Use inspection equipment that can be calibrated on the reference standard as specified in Paragraph 4.

(2) Refer to Part 1, 51-01-00, for data about the equipment manufacturers.

B. Instrument

(1) Use an eddy current instrument that:

(a) Has an impedance plane display.

(b) Operates at a frequency range of 1 to 2 MHz.

(c) Has rotary scanner function.

(2) The instruments that follow were used to help prepare this procedure.

(a) Nortec 2000D+; Olympus Engineering Corp.

(b) Phasec 2200; GE Sensing and Inspection Technologies

C. Probes

(1) Use a probe that can be expanded to examine 0.313 inch (7.95 mm) and 0.375 inch (9.53 mm) diameter holes. Refer to Part 6, 51-00-00, Procedure 17, paragraph 3.B, for data about probe selection.

(2) The probes that follow were used to help prepare this procedure.

(a) BYU-24/28-3WL; Olympus NDT Engineering Corp (3/8-7/16)

(b) BYU-24/28; Olympus NDT Engineering Corp (3/8-7/16)

(c) BYU-20/24-3WL; Olympus NDT Engineering Corp (5/16-3/8)

D. Reference Standard

(1) Use the reference standards that follow or approved equivalents. Refer to Part 6, 51-00-00, Procedure 17, Figure 3 for reference standard data.

(a) To examine 0.313 inch (7.95 mm) diameter fastener holes, use reference standard NDT1024.

(b) To examine 0.375 inch (9.53 mm) diameter fastener holes, use reference standard NDT1025.

BOEING PROPRIETARY - Copyright © Unpublished Work - See title page for details

3. **Prepare for the Inspection**

   A. Refer to Figure 1 for the inspection areas and remove the fasteners from the holes to be examined.

   B. Prepare the holes for inspection as specified in Part 6, 51-00-00, Procedure 17, paragraph 4.

4. **Instrument Calibration**

   A. Calibrate the equipment as specified in Part 6, 51-00-00, Procedure 17, paragraph 5.

      (1) Calibrate the equipment independently for the specific hole diameter to be examined. Use the reference standards specified in Paragraph 2.D. (or an equivalent).

5. **Inspection Procedure**

   A. Examine the upper chord of the rear spar of the horizontal stabilizer center section for cracks from BL 8.1 to BL 19.7 as follows:

      (1) Find the inspection area for the fastener holes on one side of the airplane. See Figure 1.

      (2) Calibrate the equipment as specified in Paragraph 4.

      (3) Examine the fastener holes as specified in Part 6, 51-00-00, Procedure 17, paragraph 6. Holes can be examined from the forward or aft sides of the upper chord if/as necessary for access of the rotary probe. See Figure 1.

      (4) Do Paragraph 5.A.(1) thru Paragraph 5.A.(3) again on the opposite side of the airplane.

6. **Inspection Results**

   A. Refer to Part 6, 51-00-00, Procedure 17, paragraph 7, to help make an analysis of the inspection results.

BOEING PROPRIETARY - Copyright © Unpublished Work - See title page for details

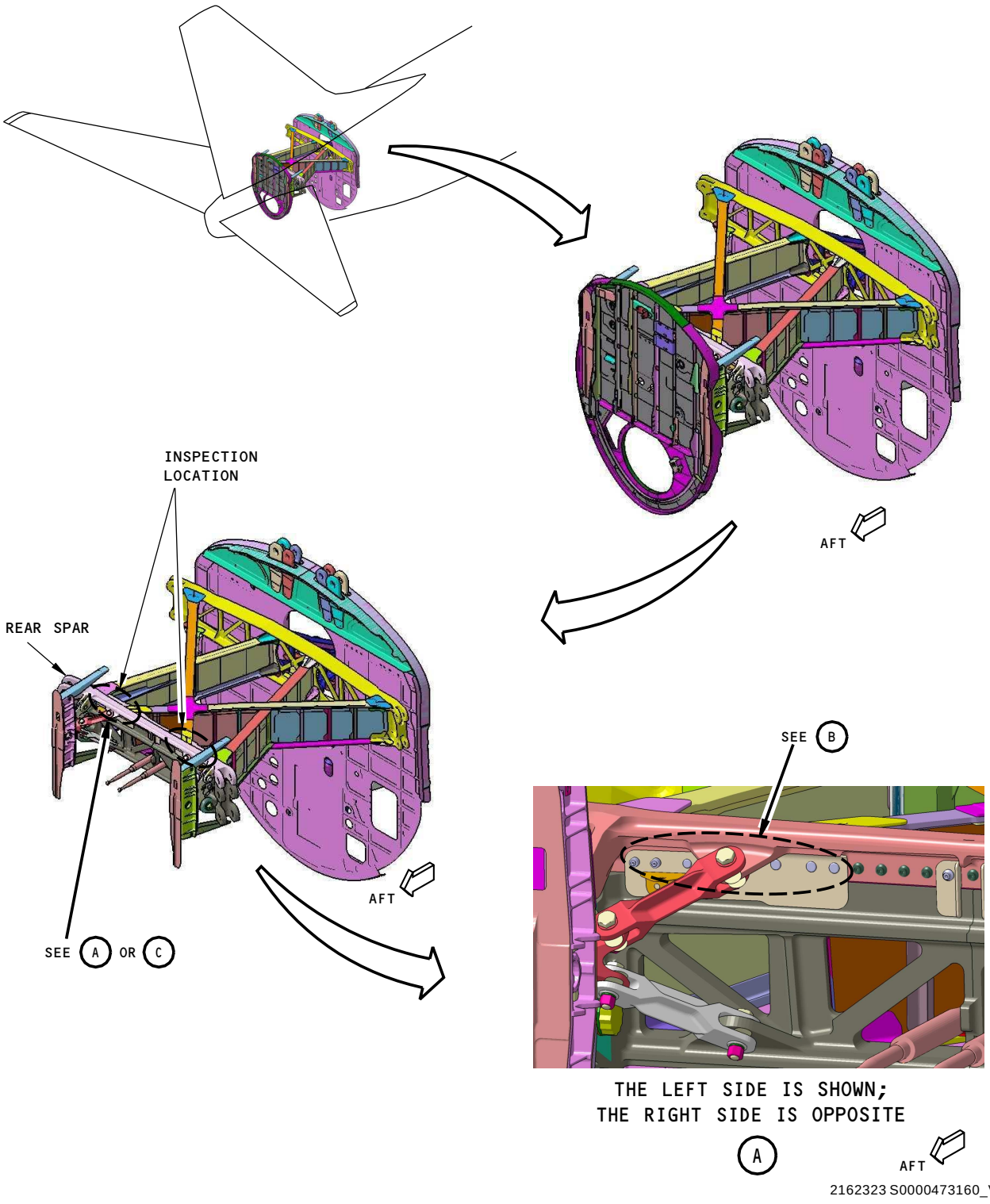

Inspection Location
Figure 1 (Sheet 1 of 3)

BOEING PROPRIETARY - Copyright © Unpublished Work - See title page for details

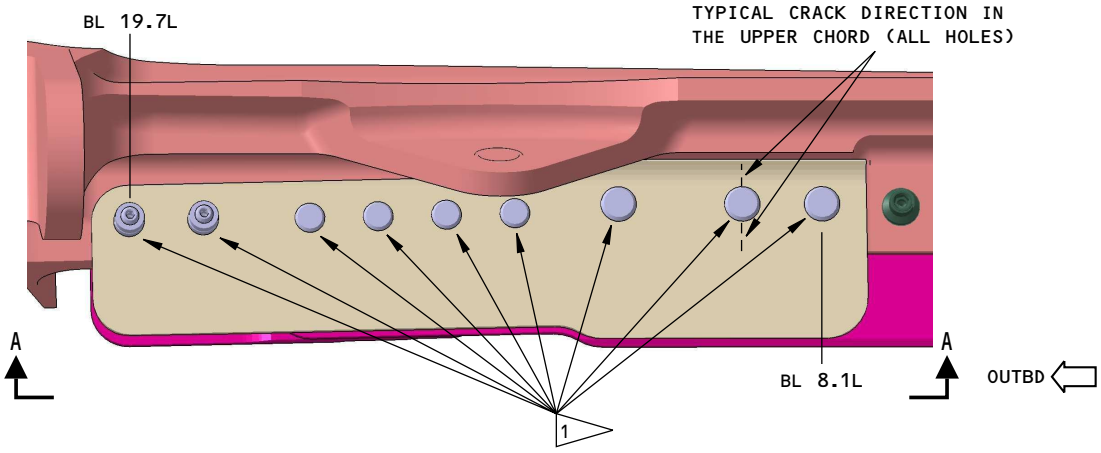

INSPECTION AREA
AFT SIDE AS YOU LOOK FORWARD. ADJACENT STRUCTURE IS REMOVED
THE LEFT SIDE IS SHOWN; THE RIGHT SIDE IS OPPOSITE

B

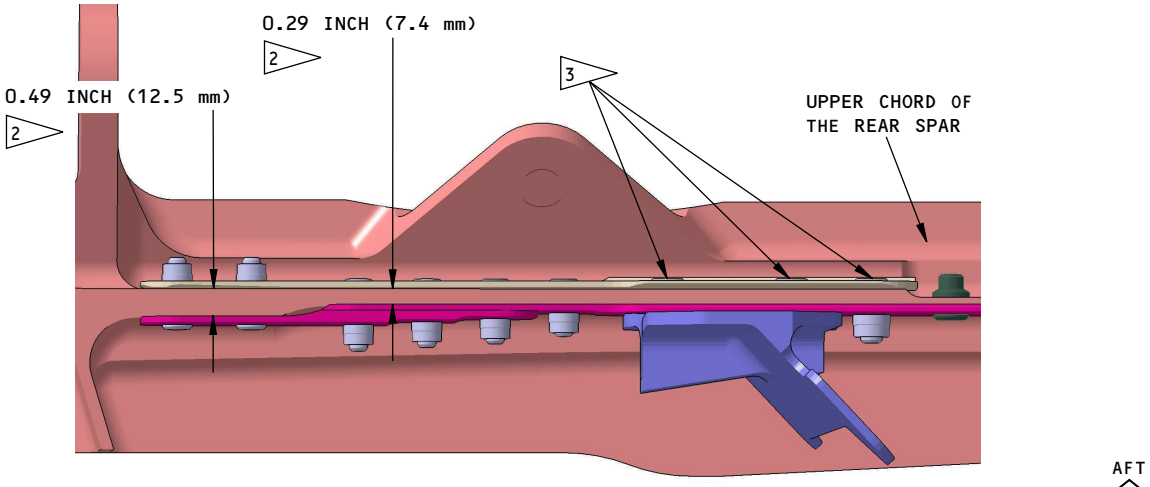

INSPECTION AREA
BOTTOM VIEW WITH ADJACENT STRUCTURE REMOVED
THE LEFT SIDE IS SHOWN; THE RIGHT SIDE IS OPPOSITE
A-A

NOTES:

- EXAMINE OPEN FASTENER HOLES WHERE SHOWN ON THE UPPER CHORD OF THE REAR SPAR FROM BL 8.1 TO BL 19.7 (ON THE LEFT AND RIGHT SIDES OF THE AIRPLANE).

1 DTR CHECK FORM ITEM 55-10-01-3 INSPECTION AREA. THERE ARE 9 FASTENER HOLE LOCATIONS TO EXAMINE ON EACH SIDE OF THE AIRPLANE (18 TOTAL). REMOVE THE FASTENERS BEFORE THE HOLES ARE EXAMINED.

2 THE THICKNESS OF THE CHORD CHANGES AT THE LAST TWO OUTBOARD FASTENERS AS SHOWN. MAKE SURE THE PROBE CAN EXTEND THROUGH THE THICKNESS AT ALL LOCATIONS.

3 THE 3 INBOARD FASTENER HOLES ARE 0.375 INCH (9.53 mm) DIAMETER HOLES. THE OTHER 6 HOLES ARE 0.313 INCH (7.95 mm) DIAMETER HOLES.

2162328 S0000473161_V1

Inspection Location
Figure 1 (Sheet 2 of 3)

BOEING PROPRIETARY - Copyright © Unpublished Work - See title page for details

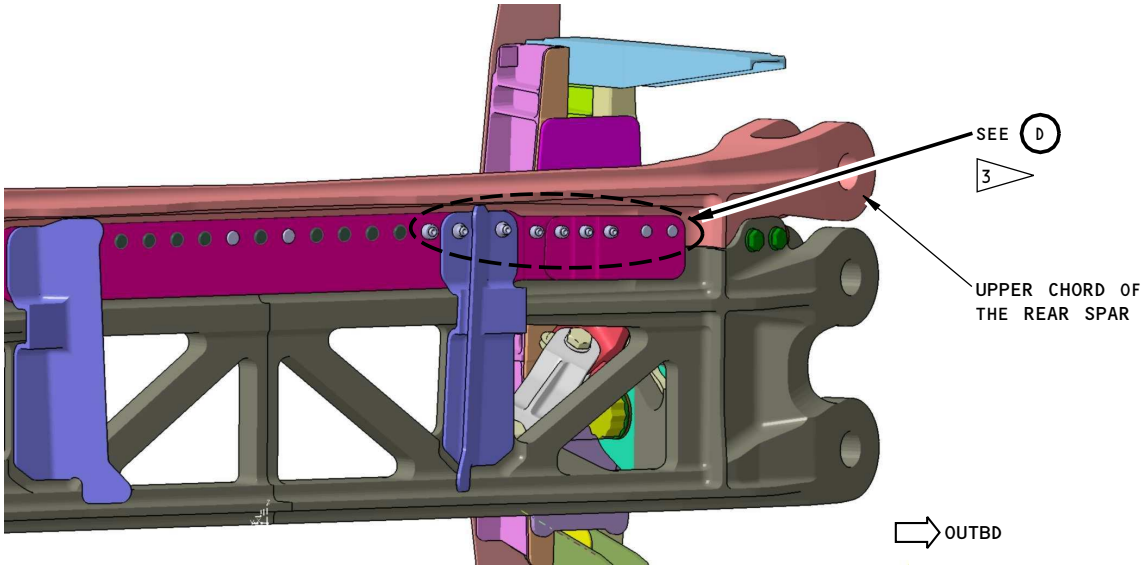

INSPECTION AREA: FORWARD SIDE AS YOU LOOK AFT. ADJACENT STRUCTURE IS REMOVED
THE LEFT SIDE IS SHOWN; THE RIGHT SIDE IS OPPOSITE

C

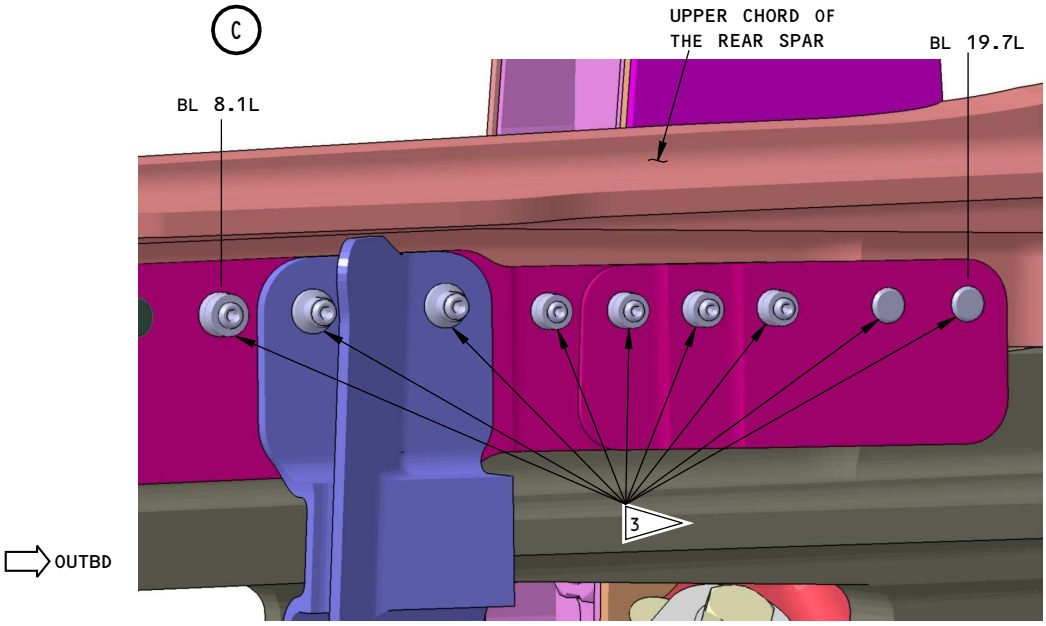

INSPECTION AREA: FORWARD SIDE AS YOU LOOK AFT. ADJACENT STRUCTURE IS REMOVED
THE LEFT SIDE IS SHOWN; THE RIGHT SIDE IS OPPOSITE

D

NOTES:

- EXAMINE OPEN FASTENER HOLES WHERE SHOWN ON THE UPPER CHORD OF THE REAR SPAR FROM BL 8.1 TO BL 19.7 (ON THE LEFT AND RIGHT SIDES OF THE AIRPLANE)

3 DTR CHECK FORM ITEM 55-10-01-3 INSPECTION AREA. THE INSPECTION CAN BE DONE FROM THE FORWARD OR AFT SIDES OF THE CHORD IF/AS NECESSARY FOR ACCESS OF THE ROTATING PROBE.

2162330 S0000473162_V1

Inspection Location
Figure 1 (Sheet 3 of 3)

BOEING PROPRIETARY - Copyright © Unpublished Work - See title page for details

PART 6 - EDDY CURRENT

SURFACE INSPECTION OF THE HINGE RIB CLEVIS LUGS AT ELEVATOR STATIONS 66, 121, 176, 213, 250 AND 265

1. Purpose

A. Use this procedure to help find surface cracks in the upper and lower clevis lugs of the hinge ribs at elevator stations 66, 121, 176, 213, 250 and 265. The areas to examine are identified in Figure 1.

B. 737 Damage Tolerance Rating (D626A001-DTR):

(1) Item: 55-10-08-05

(2) Item: 55-10-08-06

(3) Item: 55-10-08-07

(4) Item: 55-10-08-08

2. Equipment

A. General

(1) Use inspection equipment that can be calibrated on the reference standard as specified in Paragraph 4.

NOTE: The hinge ribs are made of aluminum.

(2) Refer to Part 1, 51-01-00, for data about the equipment manufacturers.

B. Instrument

(1) Use an eddy current instrument that:

(a) Has an impedance plane display.

(b) Operates at a frequency range of 50 to 500 kHz.

(2) The instrument that follows was used to help prepare this procedure.

(a) Nortec 19eII; Olympus NDT

C. Probes

(1) A shielded, right angle probe with a maximum drop of 0.5 inch (13 mm) is necessary for this inspection.

(2) Refer to Part 6, 51-00-00, Procedure 23, paragraph 3.C, for data about probe selection.

(3) The probe that follows was used to help prepare this procedure.

(a) MP905-50; Olympus NDT

D. Reference Standard

(1) Use reference standard 126 (or an equivalent) as given in Part 6, 51-00-00, Procedure 23, paragraph 3.D.(1).

3. Prepare for the Inspection

A. The elevator must be removed from the airplane to do this inspection.

B. Identify the inspection locations shown in Figure 1.

C. Remove the hinge plates from the assembly.

BOEING PROPRIETARY - Copyright © Unpublished Work - See title page for details

D. Remove loose paint, dirt and sealant from the surface of the inspection area.

4. Instrument Calibration

A. Calibrate the equipment as specified in Part 6, 51-00-00, Procedure 23, paragraph 5. Use reference standard 126 (or an equivalent) for the calibration.

5. Inspection Procedure

A. Make a scan around the outer edge of each bushing at the upper and lower clevis lugs at the hinge rib locations identified in Figure 1. Do the inspection as specified in Part 6, 51-00-00, Procedure 23, paragraph 6.

6. Inspection Results

A. Refer to Part 6, 51-00-00, Procedure 23, paragraph 7, for instructions to help make an analysis of the indications that occur during the inspection.

BOEING PROPRIETARY - Copyright © Unpublished Work - See title page for details

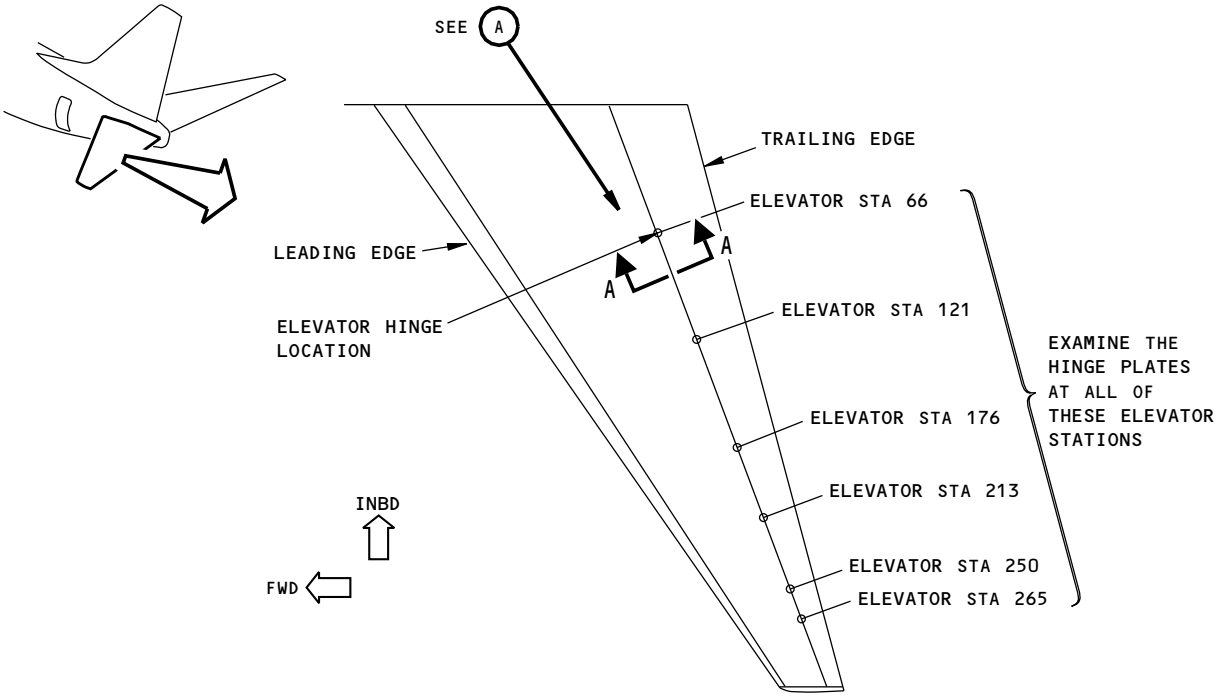

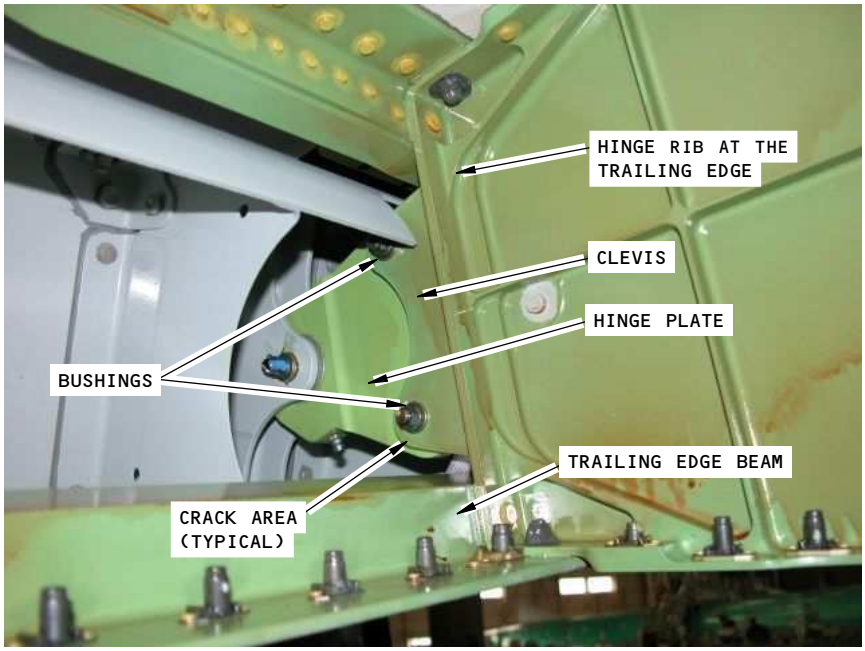

A

FWD

NOTES:

- THE LEFT HORIZONTAL STABILIZER IS SHOWN, THE RIGHT HORIZONTAL STABILIZER IS OPPOSITE.

2162336 S0000473166_V1

Inspection Areas
Figure 1 (Sheet 1 of 2)

BOEING PROPRIETARY - Copyright © Unpublished Work - See title page for details

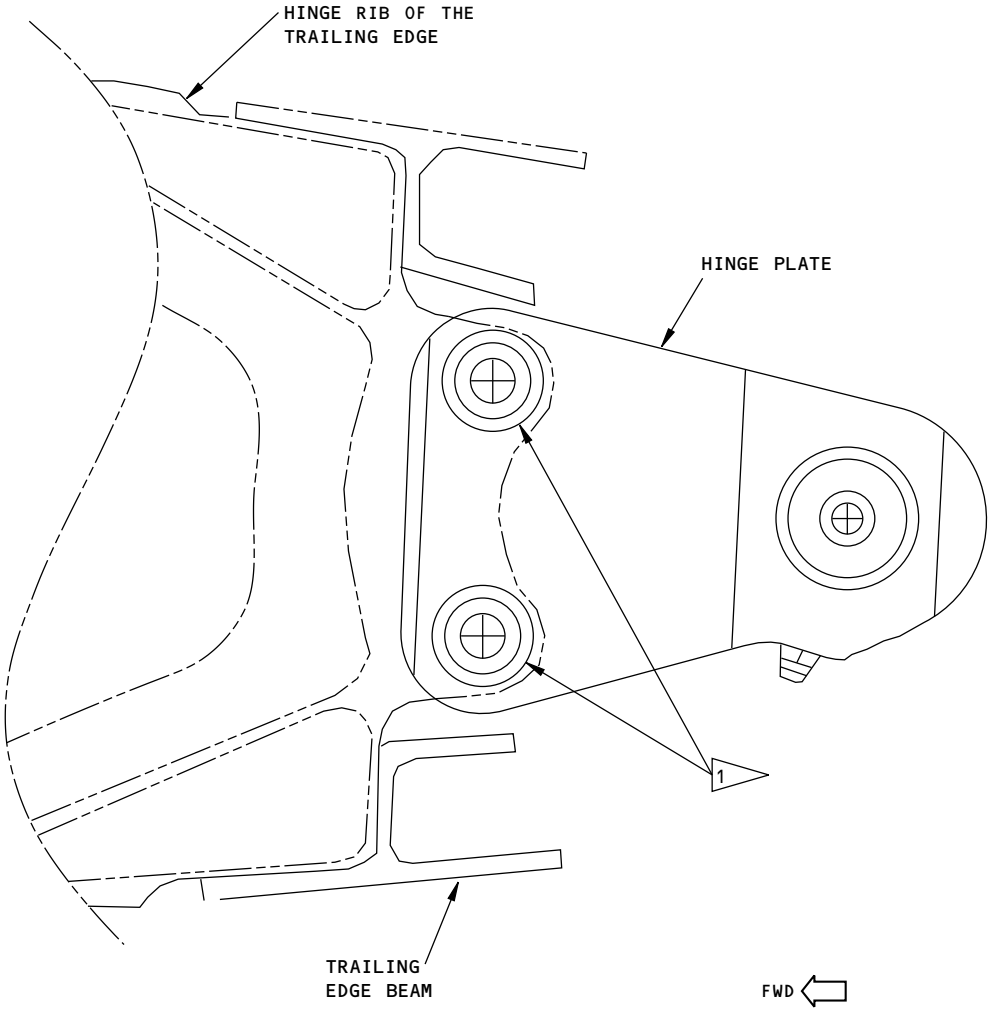

A-A
(TYPICAL)

NOTES:

1 MAKE A SCAN FOR CRACKS AROUND THE BUSHING FLANGES ON THE UPPER AND LOWER CLEVIS LUGS OF THE ELEVATOR HINGE RIB.

2162337 S0000473167_V1

Inspection Areas
Figure 1 (Sheet 2 of 2)

BOEING PROPRIETARY - Copyright © Unpublished Work - See title page for details

PART 6 - EDDY CURRENT

SURFACE INSPECTION OF THE HINGE RIBS AT ELEVATOR STATIONS 66, 121, 176, 213, 250 AND 265

1. Purpose

A. Use this procedure to examine the hinge rib for cracks around the fastener collars that go through the upper and lower rear spar chords at elevator stations 66, 121, 176, 213, 250 and 265. The areas to examine are shown in Figure 1.

B. 737 Damage Tolerance Rating (D626A001-DTR):

(1) Item: 55-10-08-09

(2) Item: 55-10-08-10

(3) Item: 55-10-08-11

2. Equipment

A. General

(1) Use inspection equipment that can be calibrated on the reference standard as specified in Paragraph 4.

NOTE: The hinge ribs are made of aluminum.

(2) Refer to Part 1, 51-01-00, for data about the equipment manufacturers.

B. Instrument

(1) Use an eddy current instrument that:

(a) Has an impedance plane display.

(b) Operates at a frequency range of 50 to 500 kHz.

(2) The instrument that follows was used to help prepare this procedure.

(a) Nortec 19eII; Olympus NDT

C. Probes

(1) Refer to Part 6, 51-00-00, Procedure 23, paragraph 3.C, for data about probe selection.

(2) The probe that follows was used to help prepare this procedure.

(a) MP905-50; Olympus NDT

D. Reference Standard

(1) Use reference standard 126 (or an equivalent) as given in Part 6, 51-00-00, Procedure 23, paragraph 3.D.(1).

3. Prepare for the Inspection

A. Identify the inspection locations shown in Figure 1.

B. The elevator and panels that follow must be removed at each station to do the inspections:

(1) To examine elevator stations 66 and 121, the lower skin panels must be removed.

(2) To examine elevator station 165, the lower trailing edge panels must be removed.

(3) To examine elevator stations 213, 250 and 265, the elevator and cove panel must be removed.

BOEING PROPRIETARY - Copyright © Unpublished Work - See title page for details

C. Remove loose paint, dirt and sealant where the probe will touch the fastener collar.

4. Instrument Calibration

A. Calibrate the equipment as specified in Part 6, 51-00-00, Procedure 23, paragraph 5. Use reference standard 126 (or an equivalent) for the calibration.

5. Inspection Procedure

A. Make a scan around the outer edge of each fastener head collar to examine the hinge rib for cracks. Do the inspection as specified in Part 6, 51-00-00, Procedure 23, paragraph 6.

6. Inspection Results

A. Refer to Part 6, 51-00-00, Procedure 23, paragraph 7, for instructions to help make an analysis of the indications that occur during the inspection.

BOEING PROPRIETARY - Copyright © Unpublished Work - See title page for details

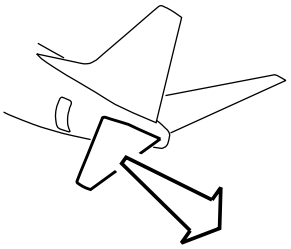

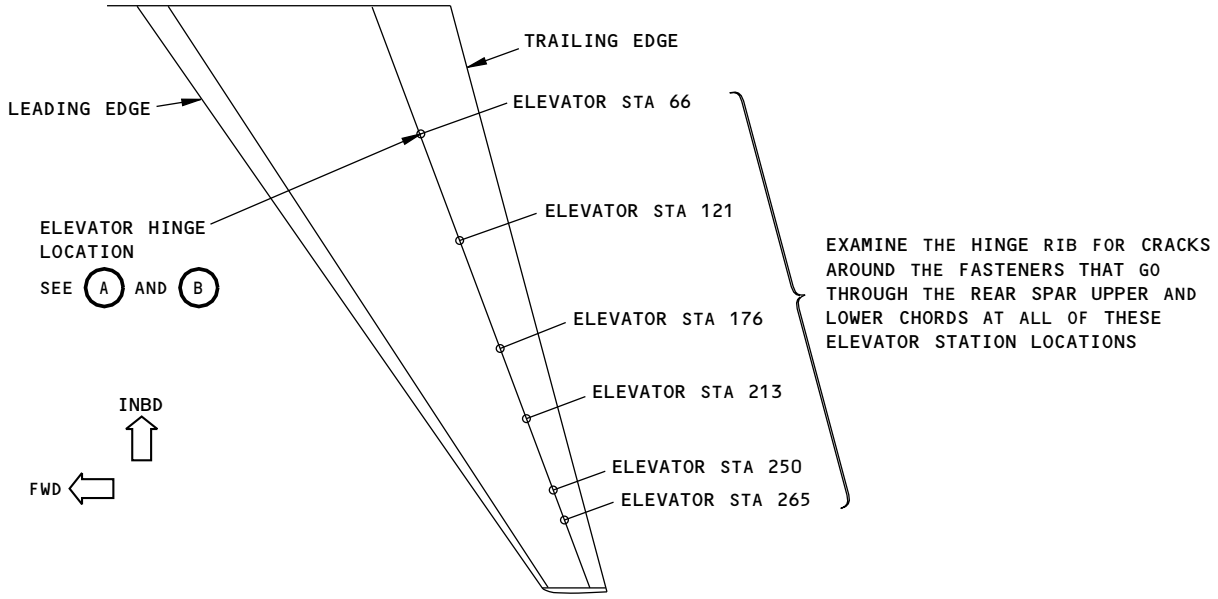

NOTES:

- THE LEFT HORIZONTAL STABILIZER IS SHOWN; THE RIGHT HORIZONTAL STABILIZER IS OPPOSITE.

2162348 S0000473169_V1

Inspection Areas
Figure 1 (Sheet 1 of 2)

BOEING PROPRIETARY - Copyright © Unpublished Work - See title page for details

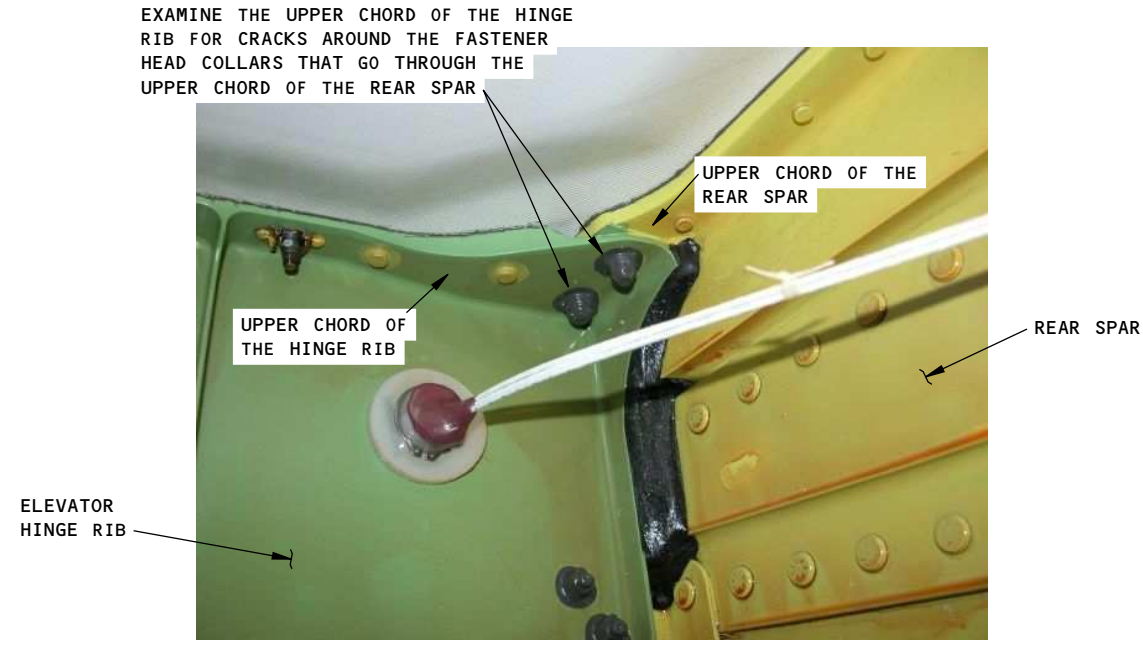

UPPER CHORD INSPECTION AREA

A

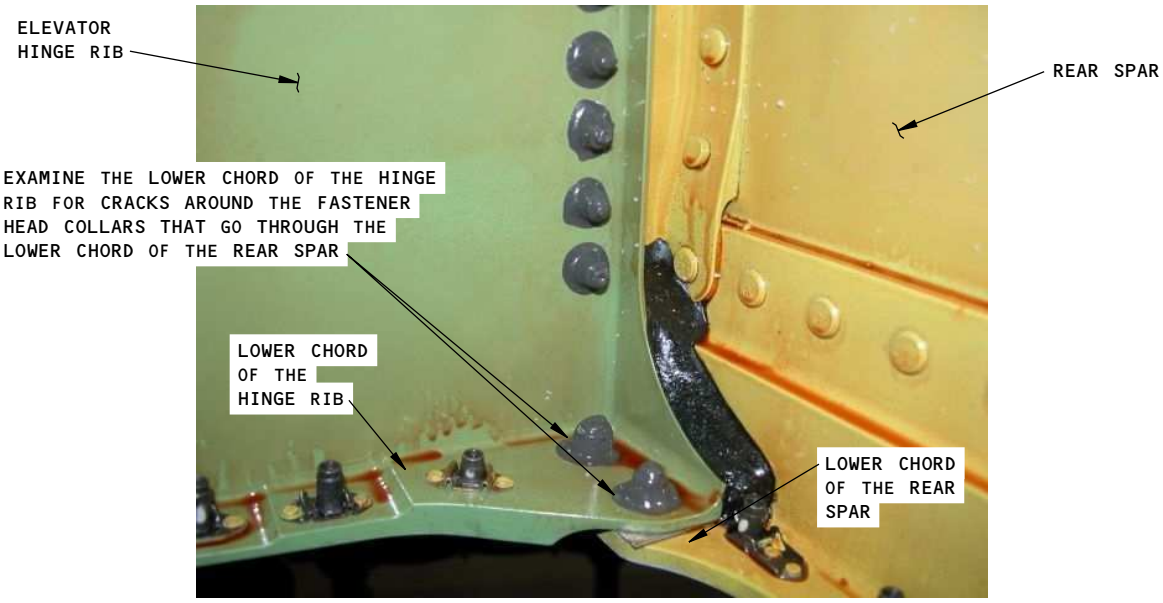

LOWER CHORD INSPECTION AREA

B

2162349 S0000473170_V1

Inspection Areas
Figure 1 (Sheet 2 of 2)

BOEING PROPRIETARY - Copyright © Unpublished Work - See title page for details

VERTICAL FLANGE OF THE UPPER CHORD IN THE PRIMARY BEAM OF THE HORIZONTAL STABILIZER FROM STA 1216 TO 1242

1. Purpose

A. Use this procedure to help find cracks in the upper chord of the primary beams. The two primary beams are in the center section of the horizontal stabilizer. Cracks can start at the fastener holes that attach the web to the vertical flange of the upper chord. The areas to examine are identified in Figure 1.

B. 737 Damage Tolerance Rating (D626A001-DTR):

(1) Item: 55-10-14-9

2. Equipment

A. General

(1) Use inspection equipment that can be calibrated on the reference standard as specified in Paragraph 4.

(2) Refer to Part 1, 51-01-00, for data about the equipment manufacturers.

B. Instrument

(1) Use an eddy current instrument that:

(a) Has an impedance plane display.

(b) Operates at a frequency range of 50 to 500 kHz.

(2) The instruments that follow were used to help prepare this procedure.

(a) Nortec 500; Olympus NDT

C. Probes

(1) A shielded, straight or right-angle probe with a minimum drop of 0.2 inch (5 mm) can be used to do this inspection.

(2) Refer to Part 6, 51-00-00, Procedure 23, paragraph 3.C, for data about probe selection.

(3) The probe that follows was used to help prepare this procedure.

(a) Probe MP-50; NDT Engineering Corp (Olympus)

D. Reference Standards

(1) Use reference standard 188A, or an equivalent, as given in Part 6, 51-00-00, Procedure 23, paragraph 3.D.

3. Prepare for the Inspection

A. Get access to the inspection areas and identify the fastener locations to examine. See Figure 1.

B. Remove sealant from around each fastener and on the inspection surface. The sealant must be replaced after the inspections are completed.

4. Instrument Calibration

A. Calibrate the equipment as specified in Part 6, 51-00-00, Procedure 23, paragraph 5. Use reference standard 188A, or an equivalent, for the calibration.

BOEING PROPRIETARY - Copyright © Unpublished Work - See title page for details

5. **Inspection Procedure**

A. Examine each fastener location for cracks as specified in Part 6, 51-00-00, Procedure 23, paragraph 6, and as follows:

(1) Keep the probe lightly against the fastener and make a 360 degree scan around it.

(2) Do Paragraph 5.A.(1) at each fastener location in the two primary beam inspection areas identified in Figure 1.

6. **Inspection Results**

A. Refer to Part 6, 51-00-00, Procedure 23, paragraph 7, to help make an analysis of indications that occur during the inspection.

BOEING PROPRIETARY - Copyright © Unpublished Work - See title page for details

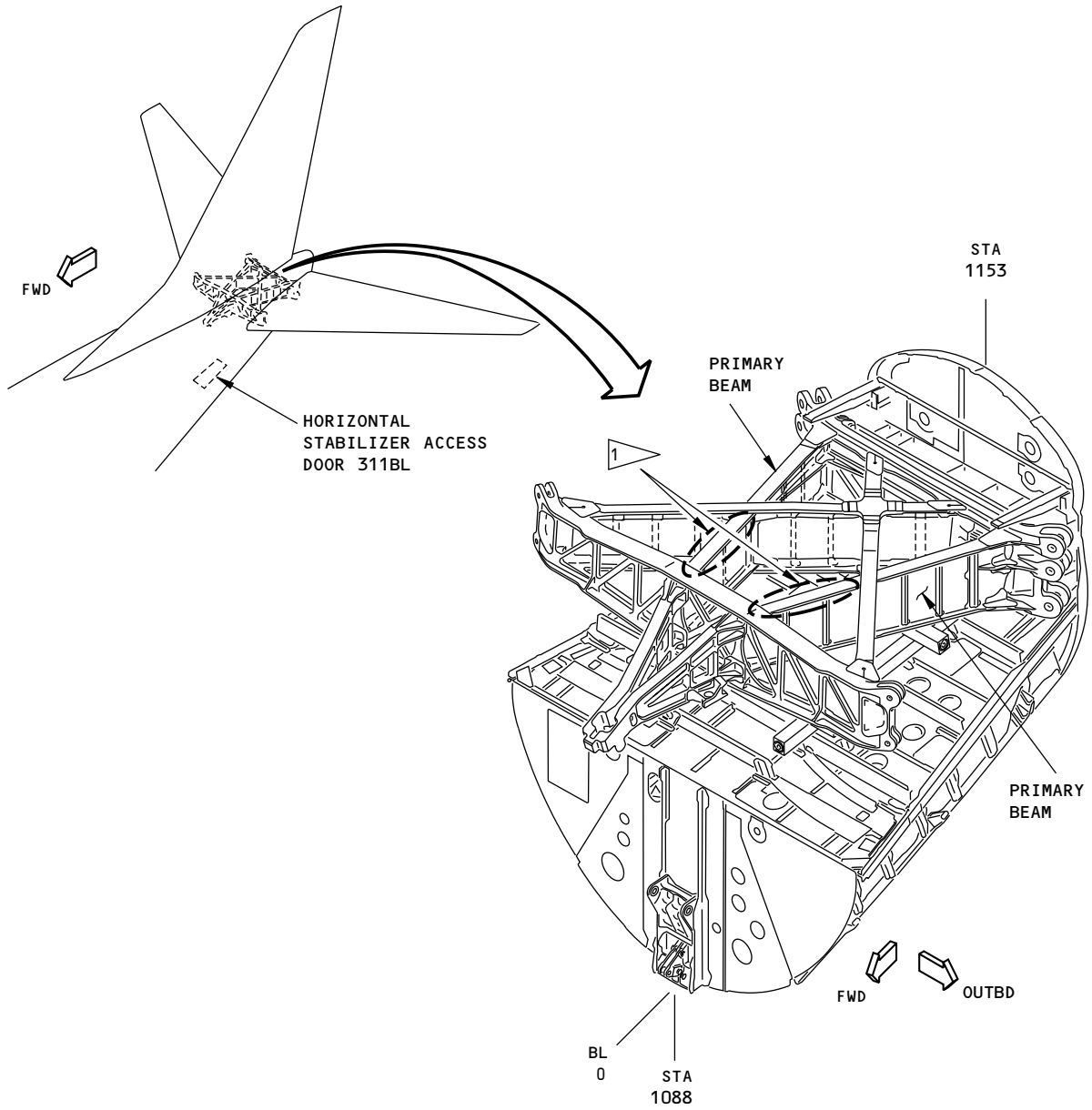

NOTES:

1 EXAMINE THE VERTICAL FLANGE OF THE UPPER CHORD IN THE PRIMARY BEAM FOR CRACKS AROUND THE FASTENERS FROM STATION 1216 TO 1242. SEE VIEW A FOR MORE DETAILS.

2162351 S0000473172_V1

Inspection Areas
Figure 1 (Sheet 1 of 2)

BOEING PROPRIETARY - Copyright © Unpublished Work - See title page for details

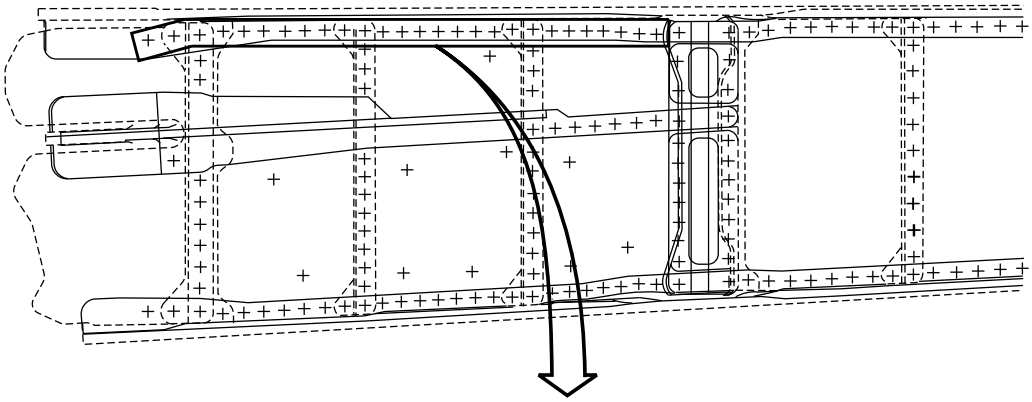

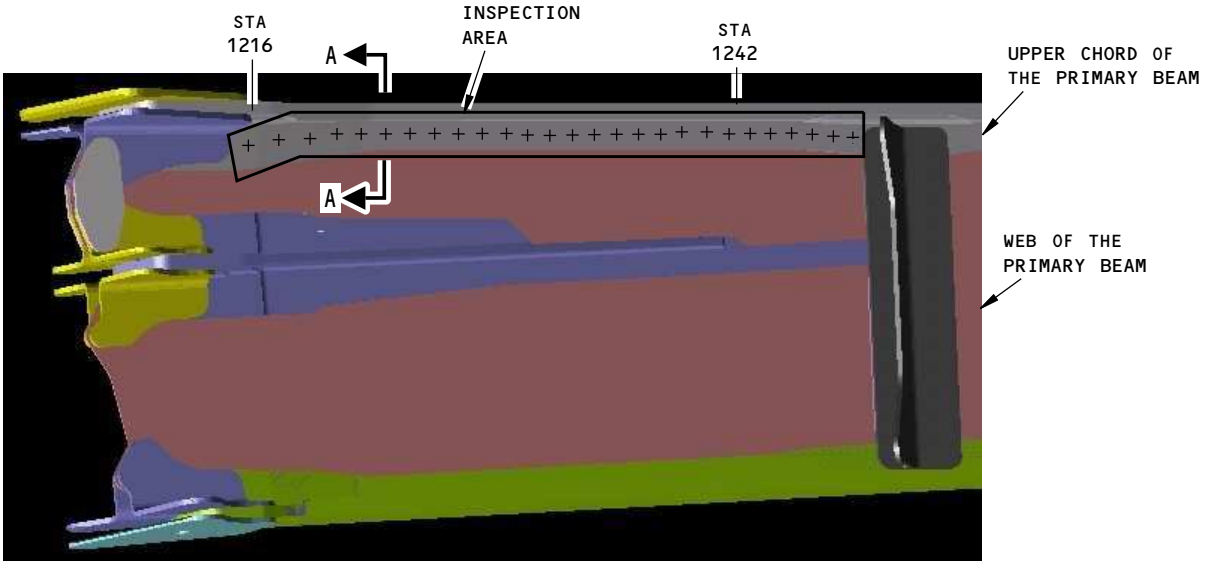

A

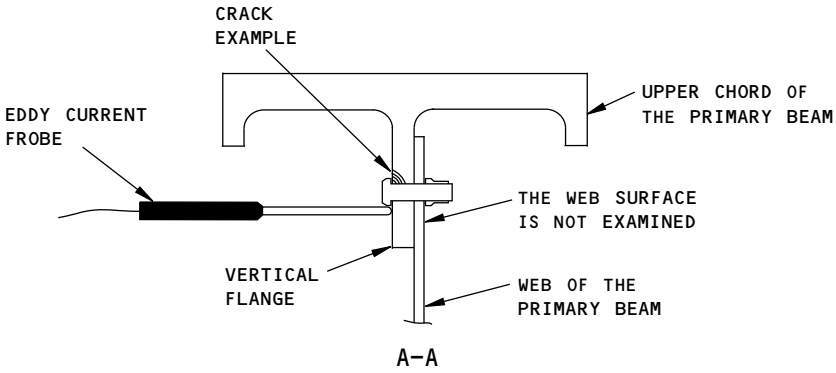

NOTES:

- TO EXAMINE THE UPPER CHORD, MAKE A SCAN AROUND EACH FASTENER IN THE INSPECTION AREA.

2162352 S0000473173_V1

Inspection Areas
Figure 1 (Sheet 2 of 2)

BOEING PROPRIETARY - Copyright © Unpublished Work - See title page for details

PART 6 - EDDY CURRENT

UPPER CHORD OF THE REAR SPAR OF THE HORIZONTAL STABILIZER - BETWEEN THE TITANIUM FITTINGS (OPEN HOLE)

1. Purpose

A. Use this open hole, surface eddy current procedure to help find cracks in the upper chord of the rear spar between the titanium fittings of the horizontal stabilizer.

B. It is necessary to remove fasteners to do this inspection. The fastener holes to examine are shown in Figure 1.

C. The upper chord is made of aluminum.

D. 737 Maintenance Planning Document (MPD) Damage Tolerance Record (DTR) Check Form Reference:

(1) Item: 55-10-04-1

2. Equipment

A. General

(1) Use inspection equipment that can be calibrated on the reference standard as specified in Paragraph 4.

(2) Refer to Part 1, 51-01-00, for data about the equipment manufacturers.

B. Instrument

(1) Use an eddy current instrument that:

(a) Has an impedance plane display.

(b) Operates at a frequency range of 300 to 500 kHz.

(c) Has rotary scanner function.

(2) The instruments that follow were used to prepare this procedure.

(a) Phasec 1.1 SD; Hocking, Inc.

(b) Phasec 2200; Hocking, Inc.

C. Probes

(1) Use probes that can be expanded to examine 1.000 inch (25.40 mm) diameter holes and 1.125 inch (28.58 mm) diameter holes. Refer to Part 6, 51-00-00, Procedure 16, paragraph 3.B, for data about probe selection.

(2) The probe that follows was used to help prepare this procedure.

(a) URY1.0-1.125; Techna NDT

D. Reference Standard

(1) Use the reference standards that follow or approved equivalents. Refer to Part 6, 51-00-00, Procedure 16, Figure 3, for reference standard data.

(a) To examine 1.000 inch (25.40 mm) diameter fastener holes, use reference standard NDT1084 with a 1.000 inch (25.40 mm) diameter hole.

BOEING PROPRIETARY - Copyright © Unpublished Work - See title page for details

(b) To examine 1.125 inch (28.58 mm) diameter fastener holes, use reference standard NDT1084 with a 1.125 inch (28.58 mm) diameter hole.

NOTE: Reference standard NDT1084 has two corner notches of different dimensions; use the 0.030 inch (0.76 mm) corner notch for this inspection.

3. Prepare for the Inspection

A. Refer to Figure 1 for the inspection areas and remove the fasteners and bushings from the holes to be examined.

B. Clean loose dirt and sealant from inside the fastener holes.

C. Visually examine the inner surface of the holes for surface conditions that can cause crack type signals during the inspection. Borescopes, endoscopes or other optical aids can be used to help with the visual inspection. These are the conditions to look for:

(1) Burrs

(2) Galling

(3) Corrosion

(4) Out-of-round holes

D. If one or more of the conditions given in Paragraph 3.C. are seen, it can be necessary to do a 0.016 inch (0.41 mm) clean-up ream before the hole is examined.

(1) Before you do a clean-up ream, look at the hole to see if it will damage the probe. If the hole will not damage the probe, you can do the inspection.

(2) A 125 RHR or better surface finish is necessary after a clean-up ream.

E. The equipment must be calibrated as specified in Paragraph 4. to do this inspection.

4. Instrument Calibration

A. Calibrate the equipment as specified in Part 6, 51-00-00, Procedure 16, paragraph 5.

5. Inspection Procedure

A. Refer to Part 6, 51-00-00, Procedure 16, paragraph 6, to examine each fastener hole identified in Figure 1.

B. Do Paragraph 5.A. on the rear spar of the opposite horizontal stabilizer.

6. Inspection Results

A. Refer to Part 6, 51-00-00, Procedure 16, paragraph 7, for instructions to help make an analysis of all signals that occur during the inspection of the fastener holes.

B. Think about the conditions that follow during the inspection and during an analysis of the possible crack signals:

(1) Do an inspection before the first ream if the condition of the hole will not damage the probe. Holes with no signals above the reject level can be accepted.

(2) Monitor and record the dimensions and locations of all signals that are above the reject level. Do a visual check and record all surface conditions that can be the cause of the signals.

(3) In subsequent inspections, look for new signals to occur on the screen display at different locations. These can be caused by the ream process or by material particles that stay in the hole. These signals can be ignored. Do a visual examination of the hole surface and record applicable data after every ream.

BOEING PROPRIETARY - Copyright © Unpublished Work - See title page for details

(4) Look for signals that stay at the same location after you do a clean-up ream, even if the signal decreases or increases in full screen height. These are possible crack signals.

(5) If possible, use an adjustable type probe so that the same probe can be used during all subsequent inspections.

BOEING PROPRIETARY - Copyright © Unpublished Work - See title page for details

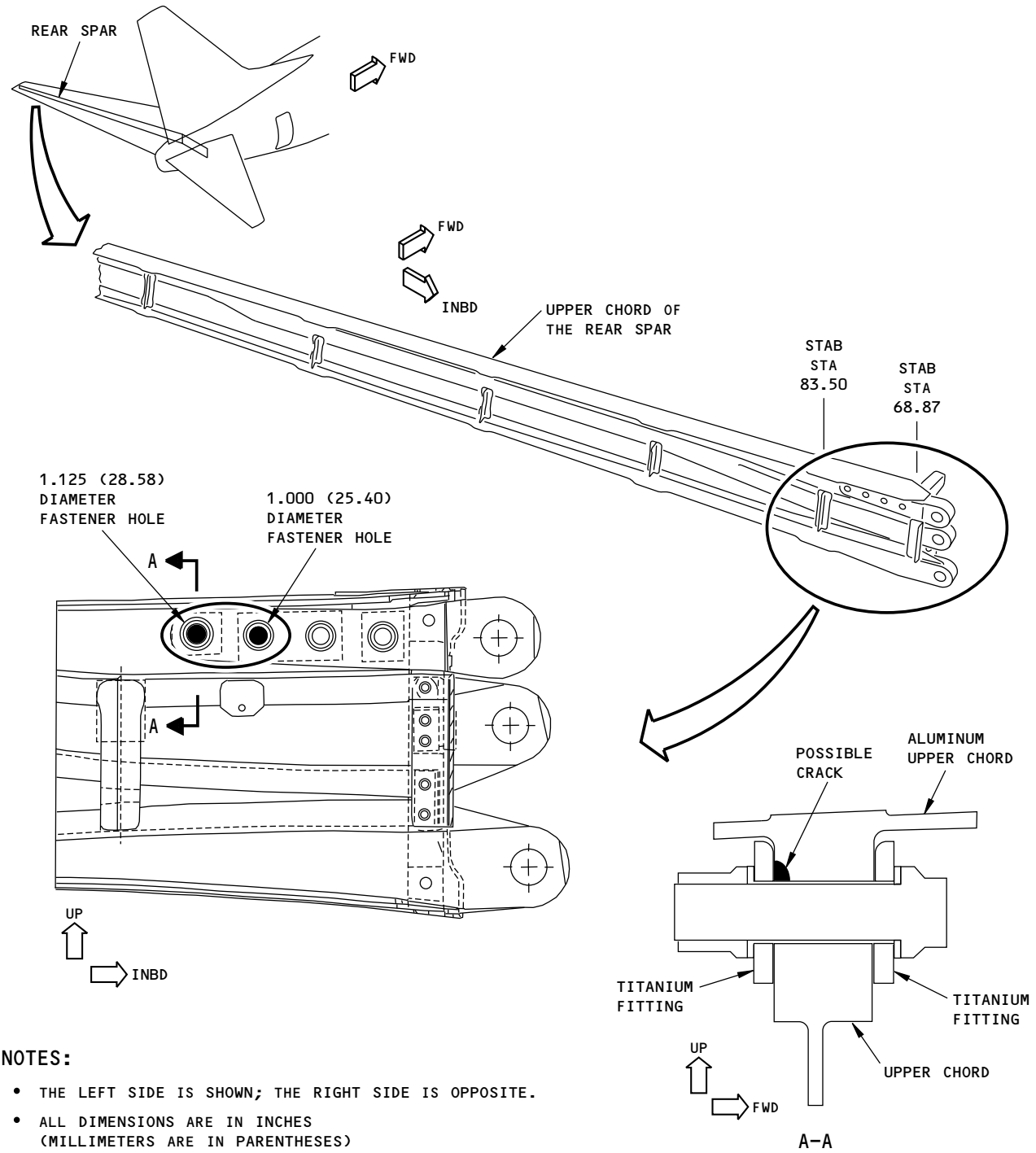

NOTES:

- THE LEFT SIDE IS SHOWN; THE RIGHT SIDE IS OPPOSITE.
- ALL DIMENSIONS ARE IN INCHES (MILLIMETERS ARE IN PARENTHESES)

INSPECTION LOCATION. FASTENERS MUST BE REMOVED TO DO THIS INSPECTION.

2162353 S0000473180_V1

Inspection Areas
Figure 1

BOEING PROPRIETARY - Copyright © Unpublished Work - See title page for details

PART 6 - EDDY CURRENT

SURFACE INSPECTION ON THE UPPER CHORD OF THE REAR SPAR BETWEEN THE TITANIUM FITTINGS OF THE HORIZONTAL STABILIZER (HFEC)

1. Purpose

A. Use this procedure to help find surface cracks on the upper surface of the upper chord of the rear spar between the titanium fittings of the horizontal stabilizer, from approximately STAB STA 69 to STAB STA 83. The inspection area is shown in Figure 1.

B. This procedure can be used to do inspections specified in Service Bulletin 737-55A1097 and the 737 MPD DTR Items identified in Paragraph 1.D. Because these documents look for different crack lengths, the distance between parallel scans will be different during the inspection procedure.

(1) To examine the inspection area for 0.200 inch (5.1 mm) long cracks as specified in the 737 MPD DTR Items identified in Paragraph 1.D., it will be necessary to do parallel scans in 0.100 inch (2.5 mm) increments.

(2) To examine the inspection area for 0.100 inch (2.5 mm) long cracks as specified in Service Bulletin 737-55A1097, it will be necessary to do parallel scans in 0.050 inch (1.3 mm) increments.

C. The upper chord is aluminum.

D. 737 Maintenance Planning Document (MPD) Damage Tolerance Rating (DTR) Check Form Reference:

(1) Item: 55-10-04-10A

(2) Item: 55-10-04-10B

(3) Item: 55-10-04-10C

E. Service Bulletin Reference: 737-55A1097

2. Equipment

A. General

(1) Use inspection equipment that can be calibrated on the reference standard as specified in Paragraph 4.

(2) Refer to Part 1, 51-01-00, for data about the equipment manufacturers.

B. Instrument

(1) Use an eddy current instrument that:

(a) Has an impedance plane display.

(b) Operates at a frequency range of 50 to 500 kHz.

(2) The instruments that follow were used to help prepare this procedure.

(a) Nortec 500D; Olympus NDT

(b) Phasec 3d; GE Inspection Technologies

C. Probes

(1) A shielded, straight or right-angle probe is necessary to do this inspection.

(2) Refer to Part 6, 51-00-00, Procedure 23, paragraph 3.C, for data about probe selection.

(3) The probe that follows was used to help prepare this procedure.

(a) MTF905-50; NDT Engineering Corp. (Olympus)

BOEING PROPRIETARY - Copyright © Unpublished Work - See title page for details

D. Reference Standards

(1) Use reference standard 126, or an equivalent, to help calibrate the instrument. Refer to Part 6, 51-00-00, Procedure 23, paragraph 3.D., for data about reference standard 126.

E. Special Tools

(1) Use a nonconductive straightedge as a probe guide during the scans.

3. Prepare for the Inspection

A. Identify the inspection areas shown in Figure 1.

B. Lightly smooth rough surfaces and sharp edges of chipped paint.

C. Fully clean the inspection area.

4. Instrument Calibration

A. Calibrate the equipment as specified in Part 6, 51-00-00, Procedure 23, paragraph 5. Use reference standard 126, or an equivalent, to help do the calibration.

5. Inspection Procedure

A. Examine the upper chord of the rear spar for cracks between STAB STA 69 and STAB STA 83 as specified in Part 6, 51-00-00, Procedure 23, paragraph 6, and the steps that follow (see Figure 1):

(1) Put the probe on the edge of the upper chord, adjacent to the horizontal stabilizer skin or the trailing edge skin.

(2) Move the probe along the edge of the upper chord from STAB STA 69 to STAB STA 83 to make a scan in the inboard to outboard direction. Use a nonconductive straightedge as a probe guide during the scan.

(3) Do scans that are parallel to the scan that was done in Paragraph 5.A.(2) until the full inspection area shown in Figure 1 is examined. Use a nonconductive straightedge as a probe guide during each scan. Do the parallel scans in the increments that apply for the length of crack you want to find as follows:

(a) To find cracks that are 0.200 inch (5.1 mm) long, as specified in the 737 MPD DTR Items identified in Paragraph 1.D., do parallel scans in 0.100 inch (2.5 mm) increments

(b) To find cracks that are 0.100 inch (2.5 mm) long, as specified in Service Bulletin 737-55A1097, do parallel scans in 0.050 inch (1.3 mm) increments.

B. Do Paragraph 5.A. again to examine the upper chord of the rear spar for cracks on the opposite horizontal stabilizer.

6. Inspection Results

A. Refer to Part 6, 51-00-00, Procedure 23, paragraph 7, for instructions to help make an analysis of indications that occur during the inspection.

BOEING PROPRIETARY - Copyright © Unpublished Work - See title page for details

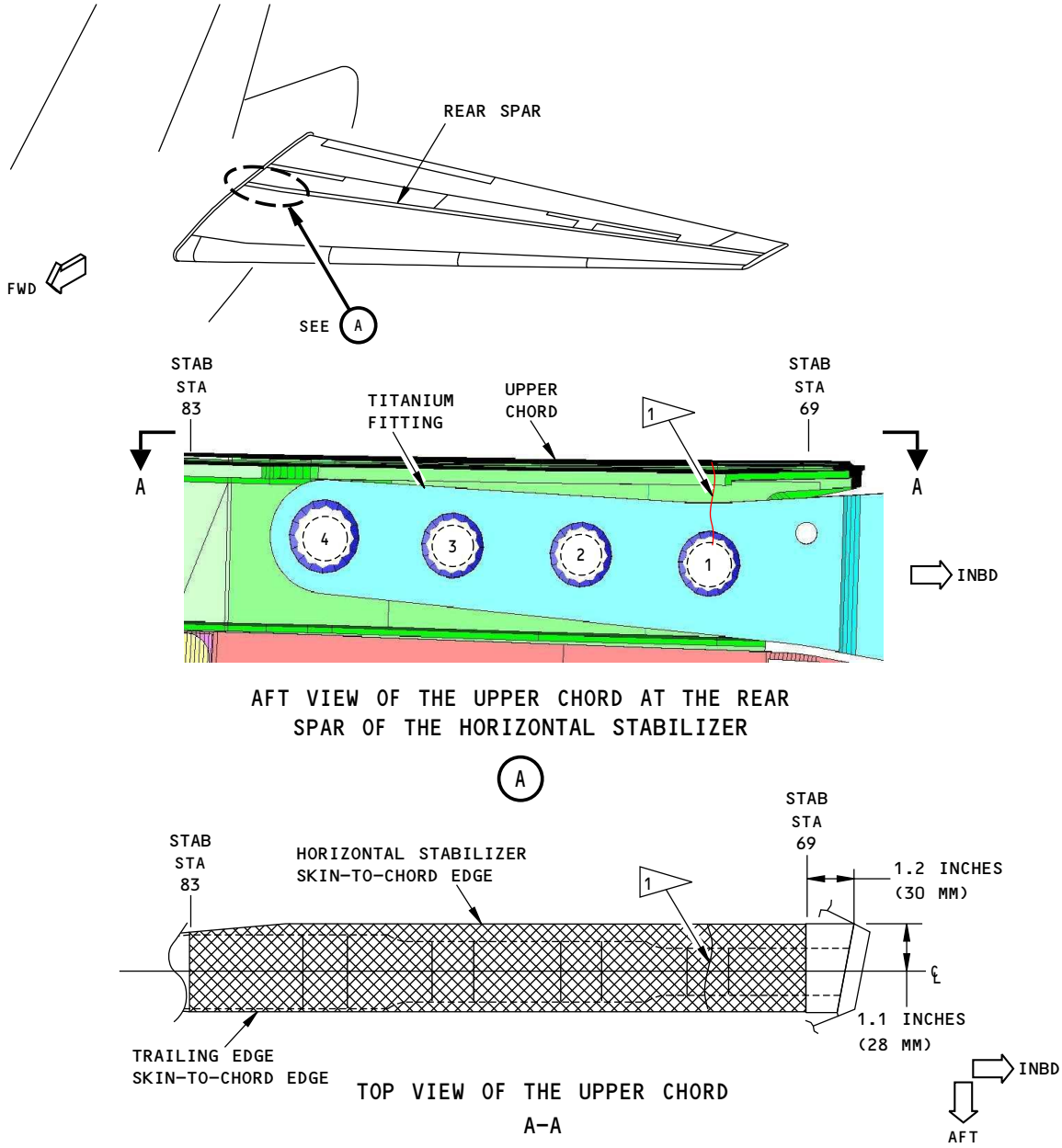

NOTES

- THE LEFT HORIZONTAL STABILIZER IS SHOWN; THE RIGHT HORIZONTAL STABILIZER IS OPPOSITE
- THE 737 MPD DTR CHECK FORM REFERENCES SPECIFIED IN PARAGRAPH 1.D. AND SERVICE BULLETIN 737-55A1097 EXAMINE THIS AREA FOR DIFFERENT CRACKS LENGTHS. MAKE SURE TO EXAMINE THE INSPECTION AREA IN 0.100 INCH (2.5 MM) SCAN INCREMENTS TO FIND THE 0.200 (5.1 MM) CRACK LENGTHS SPECIFIED IN THE 737 MPD DTR CHECK FORMS AND USE 0.050 INCH (1.3 MM) SCAN INCREMENTS TO FIND THE 0.100 INCH (2.5 MM) CRACK LENGTHS SPECIFIED IN SERVICE BULLETIN 737-55A1097.

1 TYPICAL CRACK LOCATION AND DIRECTION ON THE UPPER SIDE OF THE FASTENERS HOLES

2162354 S0000473182_V4

Inspection Areas
Figure 1

BOEING PROPRIETARY - Copyright © Unpublished Work - See title page for details

PART 6 - EDDY CURRENT

HORIZONTAL STABILIZER - UPPER CHORD OF THE FRONT SPAR (LFEC)

1. Purpose

A. Use this procedure to help find cracks that can start at fastener holes in the aluminum upper chord at the front spar of the horizontal stabilizer. The areas to examine are shown in Figure 1.

B. 737 Maintenance Planning Document (MPD) Damage Tolerance Record (DTR) Check Form Reference:

(1) Item: 55-10-06-1

2. Equipment

A. General

(1) Use inspection equipment that can be calibrated on the reference standard as specified in Paragraph 4.

(2) Refer to Part 1, 51-01-00, for data about the equipment manufacturers.

B. Instrument

(1) Use an eddy current instrument that can operate in the frequency range of 1.5 to 2.0 kHz.

(a) Nortec 500D; Olympus

C. Probe

(1) Use a reflection type ring probe that:

(a) Operates in the frequency range of 1.5 to 2.0 kHz.

(b) Has a minimum inner diameter of 0.30 inch (7.6 mm) and a maximum outer diameter of 1.00 inch (25.4 mm).

(2) The probe that follows was used to help prepare this procedure.

(a) TEK-4059-08A-TF; Techna NDT

D. Reference Standard

(1) Use reference standards NDT3191 and NDT3192. See Figure 2 and Figure 3 for data about the reference standards.

3. Prepare for the Inspection

A. Identify the inspection areas shown in Figure 1.

B. Get access to the inspection area.

C. Clean the inspection surface if necessary. Remove paint only if it is loose.

4. Instrument Calibration

A. Calibrate the instrument to examine the type “A” or “B” fasteners. See Table I in Figure 4 for the reference standard to use for the fastener type to be examined.

(1) Connect the probe and set the instrument frequency to 1.5 kHz.

(2) Adjust the horizontal and vertical gain to the same value or, if the instrument has a horizontal-to-vertical gain ratio, set it to 1:1.

(3) Set the instrument filters as follows:

BOEING PROPRIETARY - Copyright © Unpublished Work - See title page for details

(a) Set the high-pass filter to off or zero Hz.

(b) If the instrument has a low-pass filter, do the steps that follow:

1) Set the low-pass filter to its highest value.

2) Decrease the filter value to get a stable dot or until the signal from the notch in the reference standard starts to decrease.

(c) Refer to the instrument's operation manual for band-pass and other filter instructions.

(4) If the inspection area is painted, put a shim that is not conductive on top of the reference standard. The shim thickness must be within ± 0.003 inch (0.076 mm) of the thickness of the paint.

(5) Put the probe at Position 1 on the applicable reference standard for the fastener type to be examined. See Table I in Figure 4.

(6) Adjust the probe so the fastener is in the center of the probe.

(7) Balance the instrument.

(8) Move the probe a small quantity as necessary until the signal from the hole is at a minimum and again balance the instrument.

(9) Set the balance point to 20 percent of full screen height (FSH) and 90 percent of full screen width (FSW). See Detail II in Figure 4.

(10) Adjust the instrument lift-off so the signal moves horizontally to the left when the probe is lifted off the reference standard. See Detail II in Figure 4.

(11) Move the probe to Position 2 on the reference standard. See Detail I in Figure 4. Adjust the probe so the fastener is in the center of the probe.

(12) Adjust the gain to set the signal from the reference notch to 60 percent of FSH as shown in Detail II in Figure 4.

(13) Do Paragraph 4.A.(5), Paragraph 4.A.(6), Paragraph 4.A.(7), and Paragraph 4.A.(11) again to make sure the sensitivity is set correctly. If necessary, adjust the gain to set the signal from the reference notch to 60 percent of FSH.

5. Inspection Procedure

A. Calibrate the instrument for the fastener type to be examined as given in Paragraph 4.

B. Set the airplane baseline signal for a satisfactory fastener location as follows:

(1) Put the probe above one of the fasteners in the area to be examined and adjust the probe so the fastener is in the center of the probe.

(2) Balance the instrument.

(3) Compare the signal of two or more other fasteners in this group with the signal from the first fastener.

NOTE: Do not change the instrument sensitivity to find the baseline signal.

(4) Use the fastener from this group that has the smallest signal as the baseline signal for the type of fasteners to examine. Examine this fastener frequently during the inspection to make sure the instrument baseline did not change.

C. Balance the instrument on the baseline fastener.

BOEING PROPRIETARY - Copyright © Unpublished Work - See title page for details

D. Do an inspection of all the fastener locations that are of the same type. See Figure 1 for the locations of the different fastener types. Refer to Paragraph 6. for instructions to help make an analysis of possible crack signals.

E. Do Paragraph 5.A. thru Paragraph 5.D. again, but for the other fastener type that remains to be examined.

F. Do Paragraph 5.A. thru Paragraph 5.E. to examine the same inspection areas on the opposite horizontal stabilizer.

6. Inspection Results

A. A signal that is 40 percent or more of full screen height is a sign of a possible crack and more analysis is necessary.

B. Compare the signal that occurs during the inspection to the signal from the applicable notch in the reference standard.

C. Conditions that can cause crack type signals are:

(1) A change in the distance between fasteners. See if the same location on the opposite wing has the same distance between fasteners. If it is the same, then compare the results from the two locations.

(2) A steel fastener has been installed. It will be necessary to make a new reference standard with the same type of fastener installed. Use the data from NDT3191 or NDT3192 to help make the new reference standard.

D. If a crack indication is found, do an open hole eddy current inspection as specified in Part 6, 51-00-00, Procedure 16.

BOEING PROPRIETARY - Copyright © Unpublished Work - See title page for details

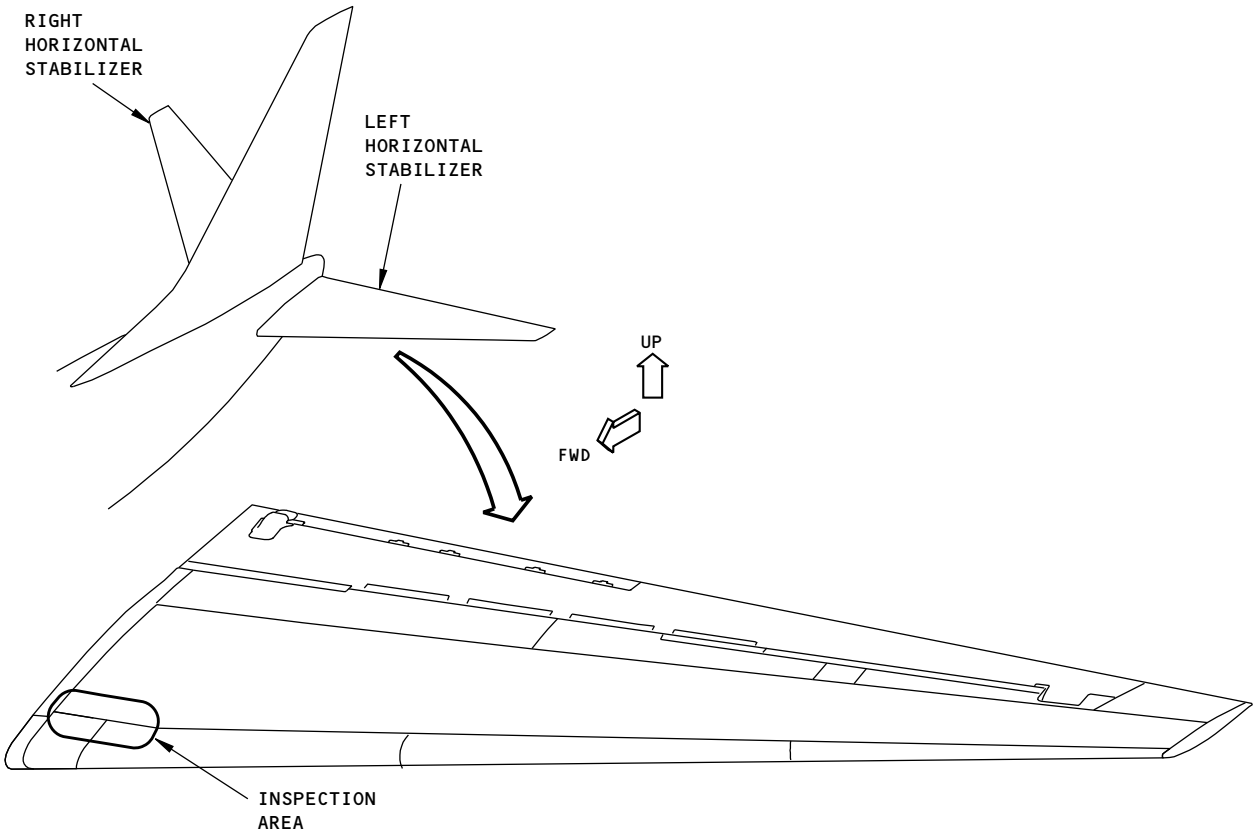

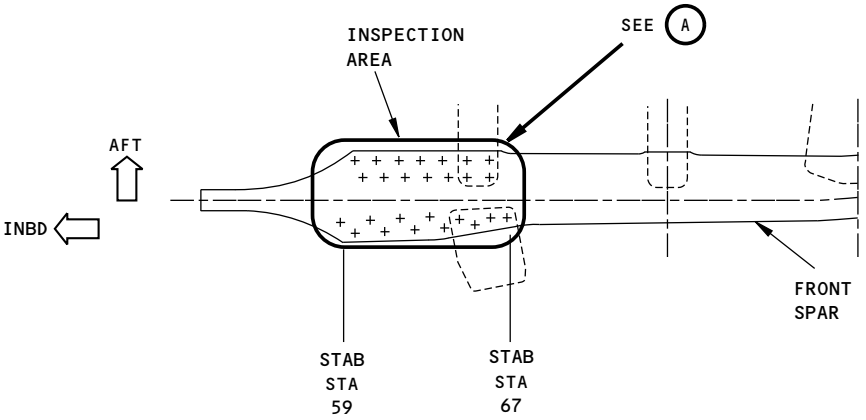

2162356 S0000473185_V1

Inspection Areas
Figure 1 (Sheet 1 of 2)

BOEING PROPRIETARY - Copyright © Unpublished Work - See title page for details

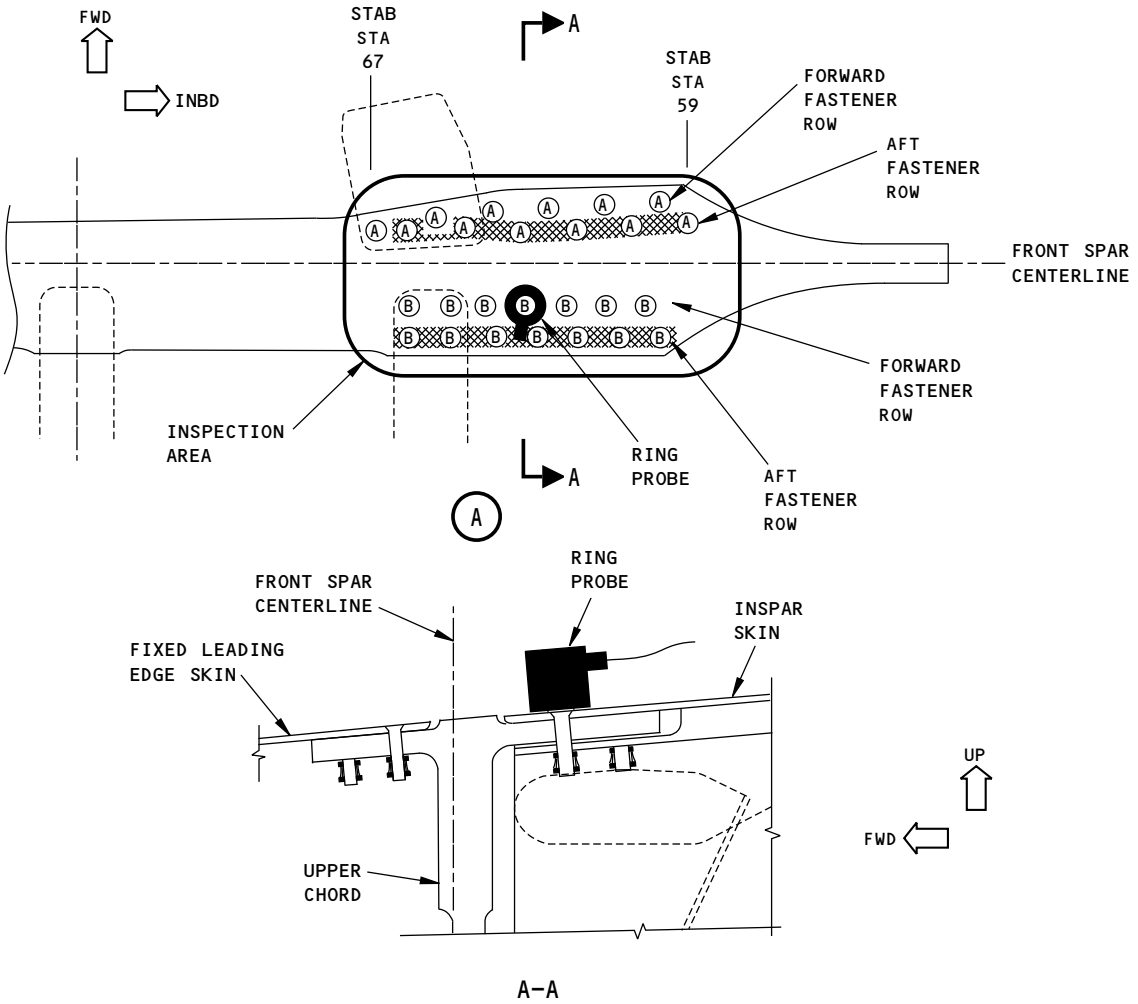

NOTES:

AFT FASTENER ROW

ⒶⒷ = FASTENERS TO EXAMINE

- DO THIS INSPECTION ON THE LEFT AND RIGHT HORIZONTAL STABILIZERS.
- USE REFERENCE STANDARD NDT3192 TO CALIBRATE THE INSTRUMENT FOR THE INSPECTION OF TYPE "A" FASTENERS.
- USE REFERENCE STANDARD NDT3191 TO CALIBRATE THE INSTRUMENT FOR THE INSPECTION OF TYPE "B" FASTENERS.

2162357 S0000473186_V2

Inspection Areas
Figure 1 (Sheet 2 of 2)

BOEING PROPRIETARY - Copyright © Unpublished Work - See title page for details

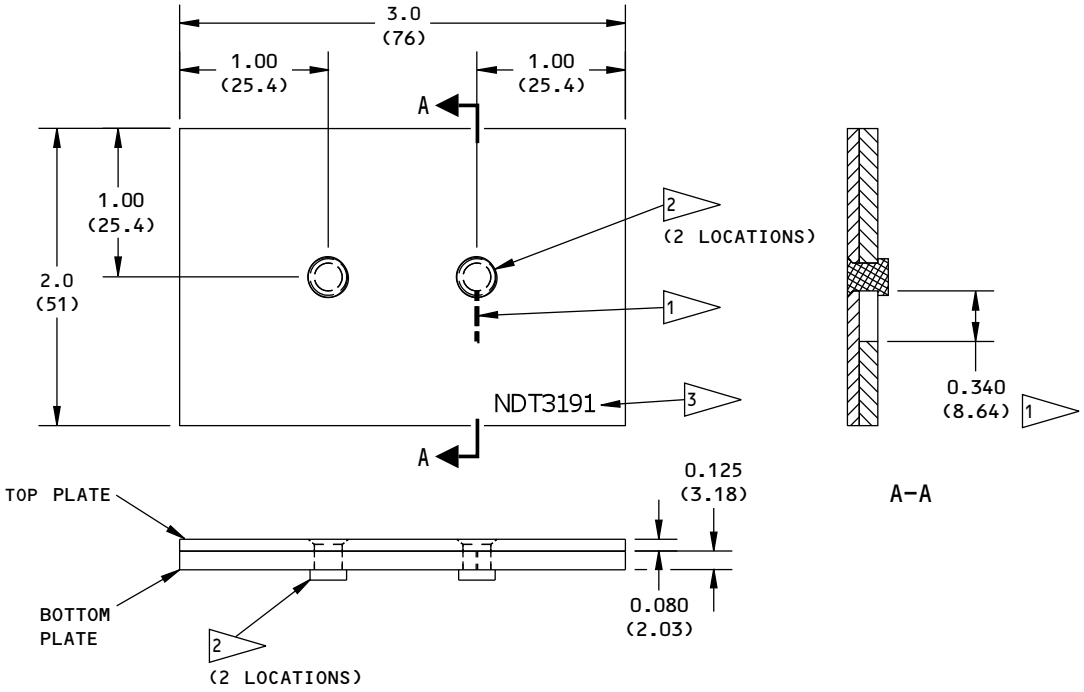

NOTES:

- ALL DIMENSIONS ARE IN INCHES (MILLIMETERS ARE IN PARENTHESES)
- TOLERANCE (UNLESS SPECIFIED DIFFERENTLY):

INCHES	MILLIMETERS
X.XXX = ±0.005	X.XX = ±0.010
X.XX = ±0.025	X.X = ±0.05
X.X = ±0.050	X = ±1

- MATERIAL: TOP PLATE: 2024-T3 ALUMINUM (CLAD OR BARE) OR EQUIVALENT WITH A CONDUCTIVITY BETWEEN 28-32 IACS
  BOTTOM PLATE: 7150-T77511 ALUMINUM (CLAD OR BARE) OR EQUIVALENT WITH A CONDUCTIVITY BETWEEN 35-39 IACS
- SURFACE ROUGHNESS: 63 Ra OR BETTER

1 EDM NOTCH:
WIDTH: 0.010 (0.25) MAXIMUM
DEPTH: THROUGH THE THICKNESS
LENGTH: 0.340 (864)

2 FASTENERS:
USE BACR15GF6* RIVETS

ALTERNATIVE FASTENERS CAN BE USED IF THEY HAVE THE SAME CONFIGURATION AS THE FASTENERS SPECIFIED

3 ETCH OR STAMP THE REFERENCE STANDARD NUMBER, NDT3191, AT APPROXIMATELY THIS LOCATION

2162358 S0000473187_V2

Reference Standard NDT3191
Figure 2

BOEING PROPRIETARY - Copyright © Unpublished Work - See title page for details

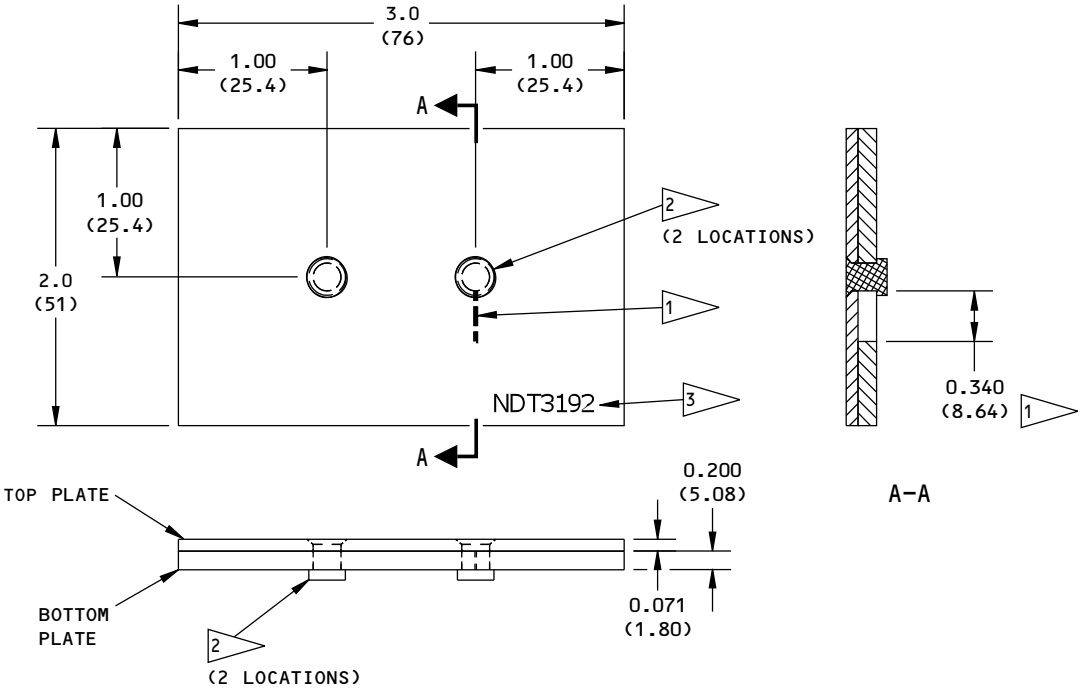

NOTES:

- ALL DIMENSIONS ARE IN INCHES (MILLIMETERS ARE IN PARENTHESES)
- TOLERANCE (UNLESS SPECIFIED DIFFERENTLY):

INCHES	MILLIMETERS
X.XXX = ±0.005	X.XX = ±0.010
X.XX = ±0.025	X.X = ±0.05
X.X = ±0.050	X = ±1

- MATERIAL: TOP PLATE: 2024-T3 ALUMINUM (CLAD OR BARE) OR EQUIVALENT WITH A CONDUCTIVITY BETWEEN 28-32 IACS
  BOTTOM PLATE: 7150-T77511 ALUMINUM (CLAD OR BARE) OR EQUIVALENT WITH A CONDUCTIVITY BETWEEN 35-39 IACS
- SURFACE ROUGHNESS: 63 Ra OR BETTER

1 EDM NOTCH:
WIDTH: 0.010 (0.25) MAXIMUM
DEPTH: THROUGH THE THICKNESS
LENGTH: 0.340 (8.64)

2 FASTENERS:
USE BACR15GF6* RIVETS

ALTERNATIVE FASTENERS CAN BE USED IF THEY HAVE THE SAME CONFIGURATION AS THE FASTENERS SPECIFIED

3 ETCH OR STAMP THE REFERENCE STANDARD NUMBER, NDT3192, AT APPROXIMATELY THIS LOCATION

2162359 S0000473188_V2

Reference Standard NDT3192
Figure 3

BOEING PROPRIETARY - Copyright © Unpublished Work - See title page for details

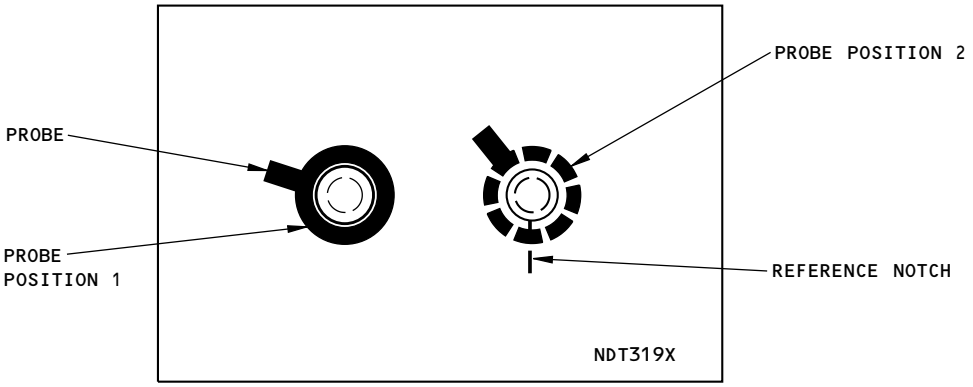

CALIBRATION PROBE POSITIONS FOR REFERENCE
STANDARDS NDT3191 AND NDT3192

DETAIL I

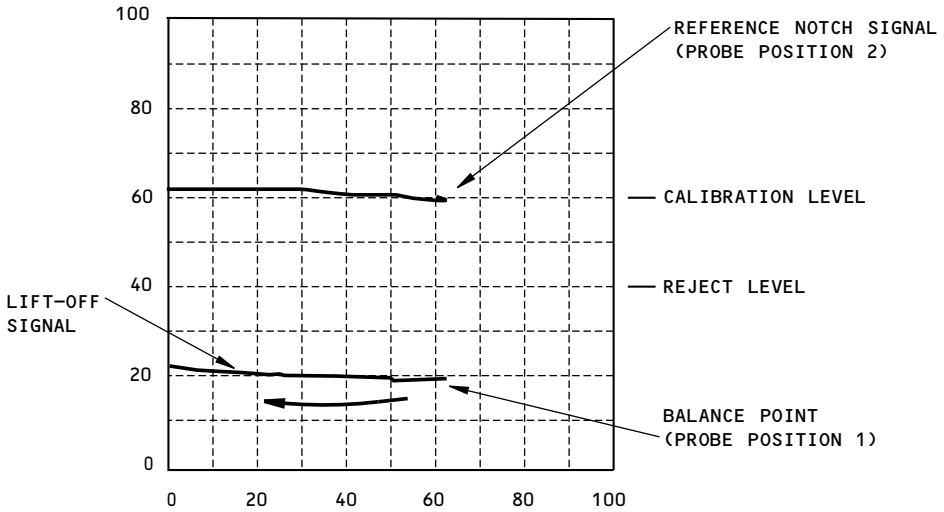

IMPEDANCE PLANE DISPLAY

DETAIL II

FASTENER TYPE	TYPE A	TYPE B
REFERENCE STANDARD	NDT3192	NDT3191

REFERENCE STANDARD NUMBER TO USE AT THE
DIFFERENT FASTENER TYPE LOCATIONS

TABLE I

2162361 S0000473189_V2

Instrument Calibration
Figure 4

BOEING PROPRIETARY - Copyright © Unpublished Work - See title page for details

PART 6 - EDDY CURRENT

UPPER CHORD OF THE REAR SPAR FROM STAB STA 80.00 TO STAB STA 258.28 OF THE HORIZONTAL STABILIZER (HFEC)

1. Purpose

A. Use this procedure to help find surface cracks on the upper chord of the rear spar of the horizontal stabilizer from STAB STA 80.00 to STAB STA 258.28. The inspection areas are shown in Figure 1.

B. 737 Maintenance Planning Document (MPD) Damage Tolerance Record (DTR) Check Form Reference:

(1) Item: 55-10-04-2

2. Equipment

A. General

(1) Use inspection equipment that can be calibrated on the reference standard as specified in Paragraph 4.

(2) Refer to Part 1, 51-01-00, for data about the equipment manufacturers.

B. Instrument

(1) Use an eddy current instrument that:

(a) Has an impedance plane display.

(b) Operates at a frequency range of 50 to 500 kHz.

(2) The instruments that follow were used to help prepare this procedure.

(a) Nortec 1000; Staveley

(b) Locator 2d; Hocking

C. Probes

(1) A shielded, straight or right-angle probe is necessary to do this inspection.

(2) Refer to Part 6, 51-00-00, Procedure 23, paragraph 3.C, for data about probe selection.

(3) The probe that follows was used to help prepare this procedure.

(a) MTF905-50; NDT Engineering Corp. (Olympus)

D. Reference Standards

(1) Use reference standard 126, or an equivalent, as given in Part 6, 51-00-00, Procedure 23, paragraph 3.D.

3. Prepare for the Inspection

A. Identify the inspection areas shown in Figure 1.

B. Lightly smooth rough surfaces and sharp edges of chipped paint.

C. Fully clean the inspection area.

4. Instrument Calibration

A. Calibrate the equipment as specified in Part 6, 51-00-00, Procedure 23, paragraph 5. Use reference standard 126, or an equivalent, to do the calibration.

BOEING PROPRIETARY - Copyright © Unpublished Work - See title page for details

5. **Inspection Procedure**

   A. Use the edge of the skin as a probe guide to examine the upper chord of the rear spar for cracks between STAB STA 80.00 and STAB STA 258.28 of the horizontal stabilizer as shown in Figure 1. Refer to Part 6, 51-00-00, Procedure 23, paragraph 6, for the inspection procedure.

   B. Do Paragraph 5.A. again to examine the upper chord of the rear spar on the opposite horizontal stabilizer.

6. **Inspection Results**

   A. Refer to Part 6, 51-00-00, Procedure 23, paragraph 7, for instructions to help make an analysis of indications that occur during the inspection.

BOEING PROPRIETARY - Copyright © Unpublished Work - See title page for details

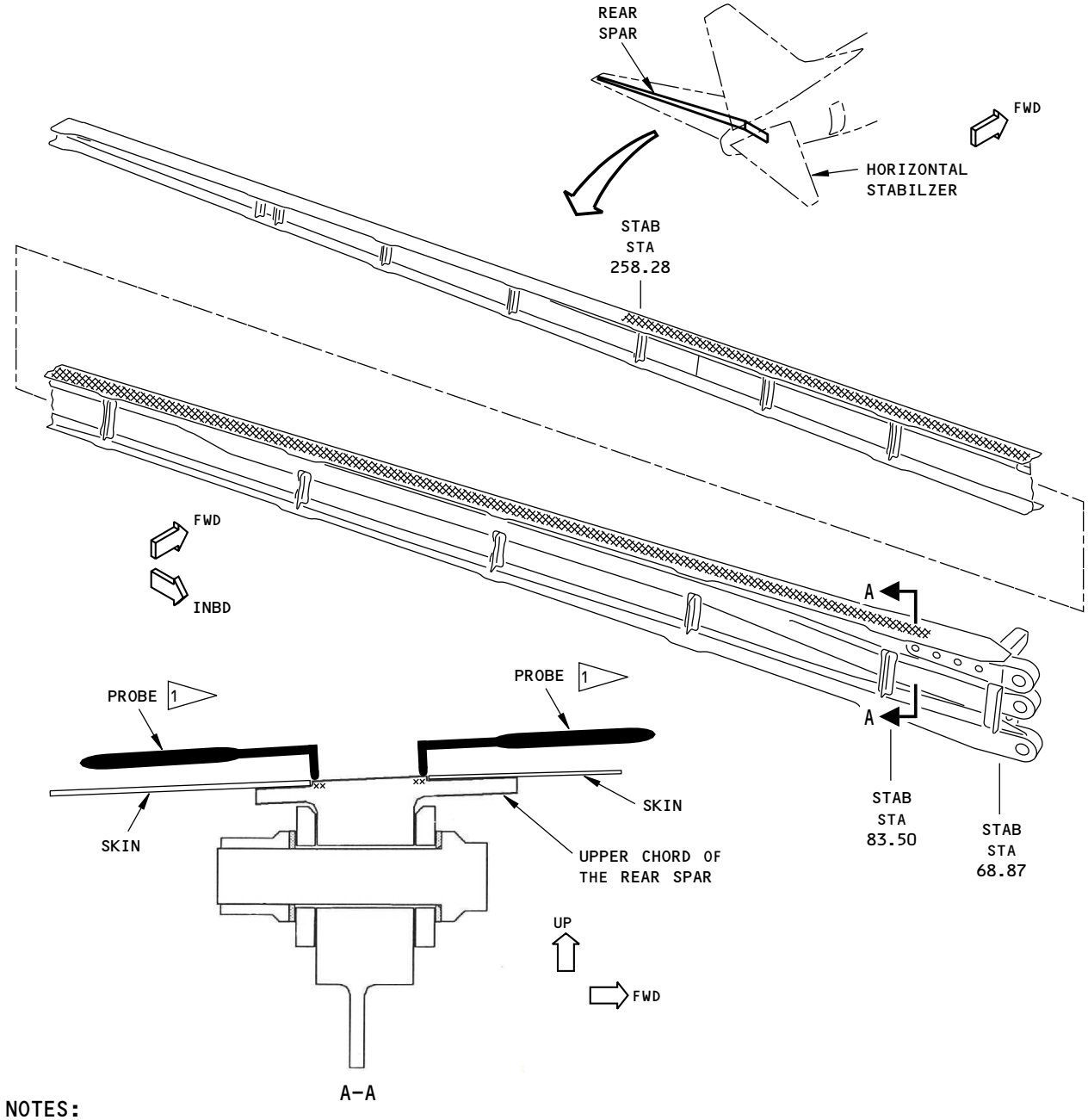

NOTES:

INSPECTION AREAS

- THE LEFT SIDE IS SHOWN; THE RIGHT SIDE IS OPPOSITE.

1 EXAMINE THE UPPER CHORD OF THE REAR SPAR FOR CRACKS AT THESE AREAS.

2162367 S0000473191_V1

Inspection Areas
Figure 1

BOEING PROPRIETARY - Copyright © Unpublished Work - See title page for details

PART 6 - EDDY CURRENT

UPPER CHORD OF THE REAR SPAR AT ELEV STA 213.32, 250.04, 265.45 AND STAB BL 254.66 OF THE HORIZONTAL STABILIZER (LFEC)

1. Purpose

A. Use this subsurface, eddy current procedure to help find subsurface cracks in the upper chord of the rear spar of the horizontal stabilizer. The upper chord is examined in the areas that are around the fasteners that attach the aluminum skin panel to the forward flange of the upper chord and the inspar rib at ELEV STA 213.32, 250.04, 265.45, and STAB BL 254.66. The inspection areas are shown in Figure 1.

B. The inspection is done from the upper skin surface of the horizontal stabilizer.

C. 737 Maintenance Planning Document (MPD) Damage Tolerance Record (DTR) Check Form Reference:

(1) Item: 55-10-04-3b

2. Equipment

A. General

(1) Use inspection equipment that can be calibrated on the reference standard as specified in Paragraph 4.

(2) Refer to Part 1, 51-01-00, for data about the equipment manufacturers.

B. Instrument - Use an eddy current instrument with an impedance plane display that can:

(1) Operate in the frequency range of 1 to 5 kHz.

(2) Be calibrated as specified in the calibration instructions of this procedure. The instruments that follow were used to help prepare this procedure.

(a) NDT-19e; Nortec/Staveley, Inc.

(b) Phasec 1.1; Hocking

(c) Elotest B1; Rohmann GmbH

C. Probes

(1) The probe must:

(a) Operate at a frequency of 2.5 kHz.

(b) Have a minimum diameter of 0.30 inch (7.6 mm).

(2) The ring probes that follow were used to help prepare this procedure.

(a) RR207-5/TF, 500 Hz-10 kHz; NDT Engineering Corp.

D. Reference Standard - Use reference standard NDT3106. See Figure 2 for data about the reference standard.

3. Prepare for the Inspection

A. Identify the inspection locations shown in Figure 1.

B. Fully clean the inspection area.

C. If necessary, remove the paint so you can see the fastener heads in the inspection area.

BOEING PROPRIETARY - Copyright © Unpublished Work - See title page for details

4. **Instrument Calibration**

A. Set the instrument frequency to 2.5 kHz.

B. Put the probe on reference standard NDT3106 at probe position 1 as shown in Detail I of Figure 3.

C. Balance the instrument.

D. Move the probe above the fastener as necessary until the height of the signal is at its minimum and balance the instrument again.

E. Set the balance point at approximately 20 percent of full screen height (FSH) and 50 percent of full screen width (FSW) as shown in Detail II of Figure 3.

F. Adjust the phase control so that the signal moves horizontally from right to left when the probe is lifted off the reference standard. See Detail II of Figure 3.

G. Put the probe on reference standard NDT3106 at probe position 2 as shown in Detail I of Figure 3. Make sure the fastener is in the center of the probe.

H. Move the probe above the fastener as necessary until the height of the signal is at its minimum.

I. Adjust the instrument gain so the maximum signal from the reference notch is 60 percent of FSH as shown in Detail II of Figure 3.

J. Do Paragraph 4.B., Paragraph 4.C., Paragraph 4.D., Paragraph 4.G., and Paragraph 4.H. again to make sure that the notch signal is 60 percent of FSH.

K. Do Paragraph 4.B. thru Paragraph 4.J. again if the signal from the fastener hole with a notch is not approximately 60 percent of FSH.

5. **Inspection Procedure**

A. Calibrate the instrument as specified in Paragraph 4.

B. Move the probe above the center of one of the two fasteners at ELEV STA 213.32. Move the probe above the fastener to get the minimum signal from the instrument.

C. Balance the instrument.

D. Compare the signal from the second fastener at the elevator station with the signal from the first fastener.

E. Use the fastener from this group which has the smallest signal as the baseline signal for the airplane.

NOTE: Do not change the instrument sensitivity when you set the airplane baseline signal.

F. Move the probe above the fastener which has the smallest signal as necessary until the height of the signal is at its minimum and balance the instrument.

G. Put the ring probe above the other fastener at the elevator station inspection location.

H. Make a mark at all the locations where signals occur that are 40 percent (or more) of FSH.

I. Do Paragraph 5.A. thru Paragraph 5.H. at the rear spar of the horizontal stabilizer to examine the upper chord for cracks at ELEV STA 250.04, 265.45 and at STAB BL 254.66. See Figure 1 for the inspection area. Examine the fastener locations at the inspar ribs.

J. Do a calibration check as follows if the equipment is changed or when the inspection is completed:

NOTE: Do not adjust the instrument gain.

(1) Put the probe on the reference standard at probe position 1.

(2) Move the probe above the fastener as necessary until the height of the signal is at its minimum.

BOEING PROPRIETARY - Copyright © Unpublished Work - See title page for details

(3) Balance the instrument.

(4) Put the probe on the reference standard at probe position 2 and make sure the fastener is in the center of the probe. Compare the signal you got from the notch during calibration with the signal you get now.

(5) If the signal you now get from the notch has decreased in FSH by 10 percent or more, do the calibration and inspection again.

K. Do Paragraph 5.A. thru Paragraph 5.J. to examine the upper chord for cracks at the rear spar of the opposite horizontal stabilizer.

6. Inspection Results

A. A signal that is more than 40% of FSH is a sign of a crack. Areas that cause crack signals to occur must be rejected and more analysis is necessary.

B. Compare the signal that occurs during the inspection to the signal you got from the notch in the reference standard during calibration.

C. If crack indications are found, do an open hole eddy current inspection as specified in Part 6, 51-00-00, Procedure 11.

BOEING PROPRIETARY - Copyright © Unpublished Work - See title page for details

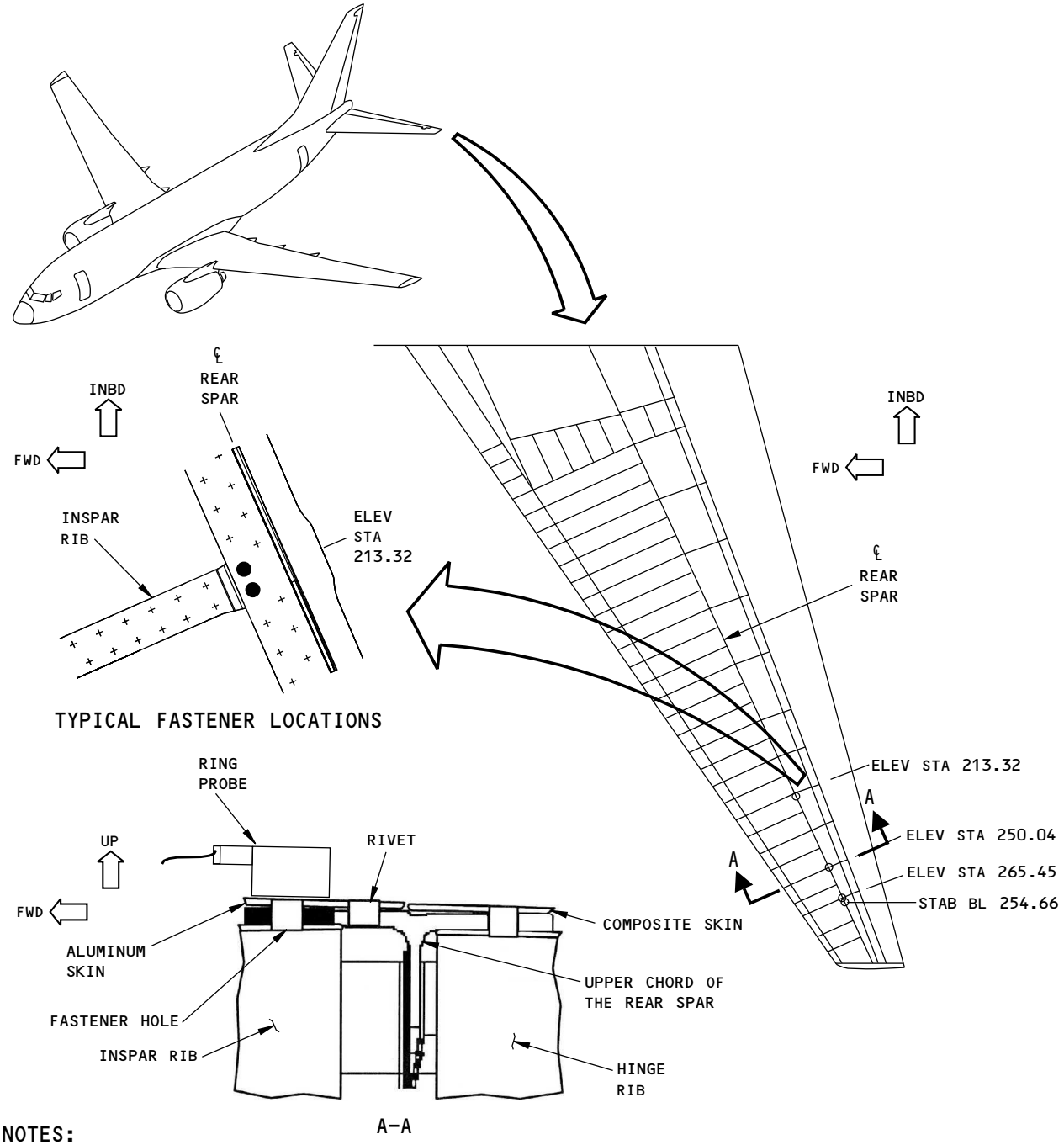

NOTES:

- FASTENER HOLES TO EXAMINE AT THE ELEVATOR STATIONS IDENTIFIED ABOVE.
- THE LEFT SIDE IS SHOWN; THE RIGHT SIDE IS OPPOSITE.

2162368 S0000473193_V1

Inspection Areas
Figure 1

BOEING PROPRIETARY - Copyright © Unpublished Work - See title page for details

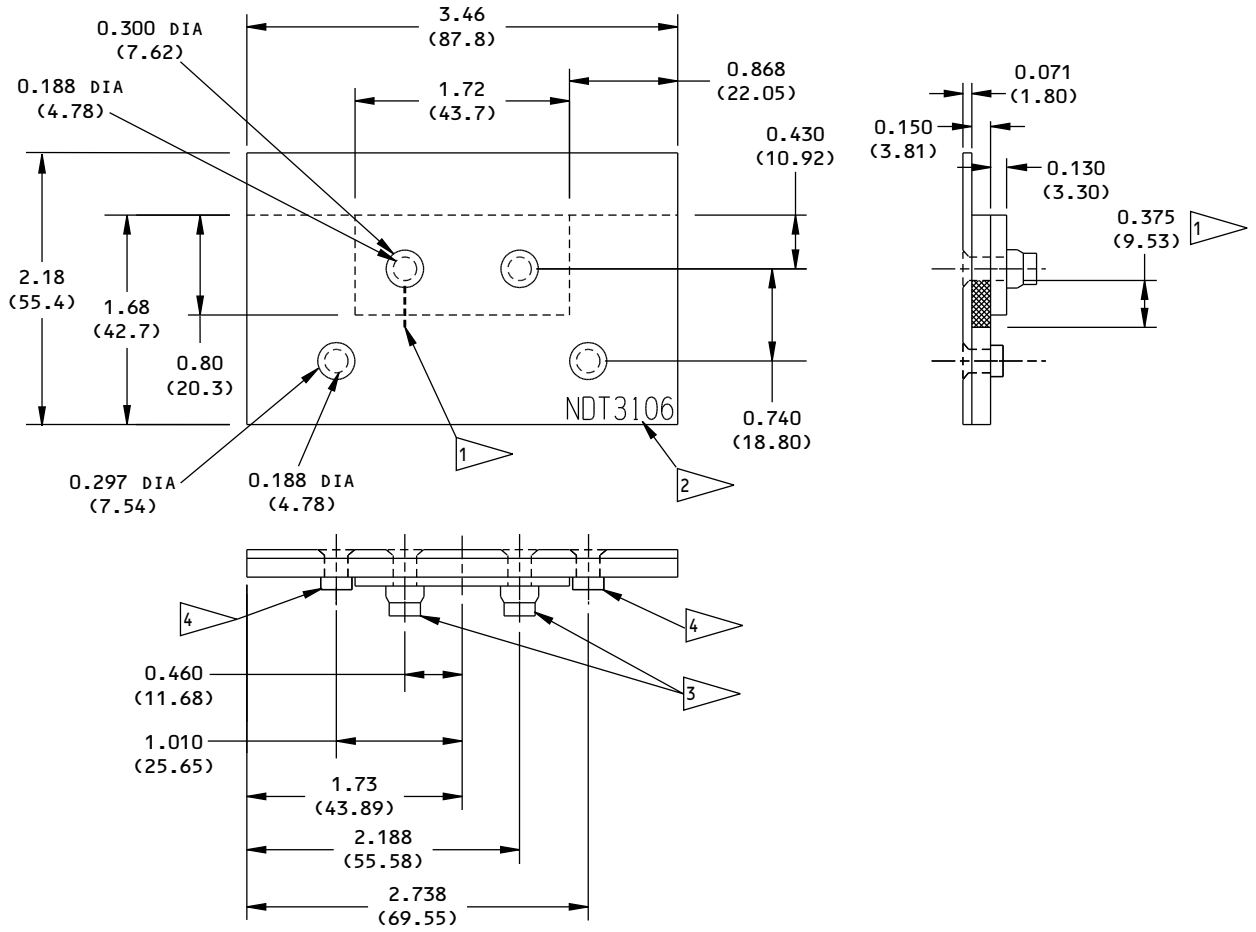

NOTES:

- ALL DIMENSIONS ARE IN INCHES
  (MILLIMETERS ARE IN PARENTHESES)
- TOLERANCE (UNLESS SPECIFIED DIFFERENTLY):

INCHES	MILLIMETERS	ANGULAR
X.XXX = ±0.005	X.XX = ±0.10	± 1°
X.XX = ±0.025	X.X = ±0.5	
X.X = ±0.050	X = ±1	

- MATERIAL: 2024-T3 CLAD FOR THE 3.46 (87.8) X 2.18 (55.4) X 0.071 (1.80) LAYER
  2024-T3 OR 7075-T6 ALUMINUM FOR OTHER LAYERS.
- SURFACE ROUGHNESS: 63 Ra OR BETTER

1 EDM THROUGH NOTCH: 0.375 (9.53) LONG X 0.010 (0.25) MAXIMUM WIDTH.

2 ETCH OR STAMP THE REFERENCE STANDARD NUMBER, NDT3106, AT APPROXIMATELY THIS LOCATION

3 BACB30VU 100° BOLT AND BACC30BL COLLAR (2 LOCATIONS)

4 BACR15GF 100° RIVET (2 LOCATIONS)

2162369 S0000473194_V1

Reference Standard NDT3106
Figure 2

BOEING PROPRIETARY - Copyright © Unpublished Work - See title page for details

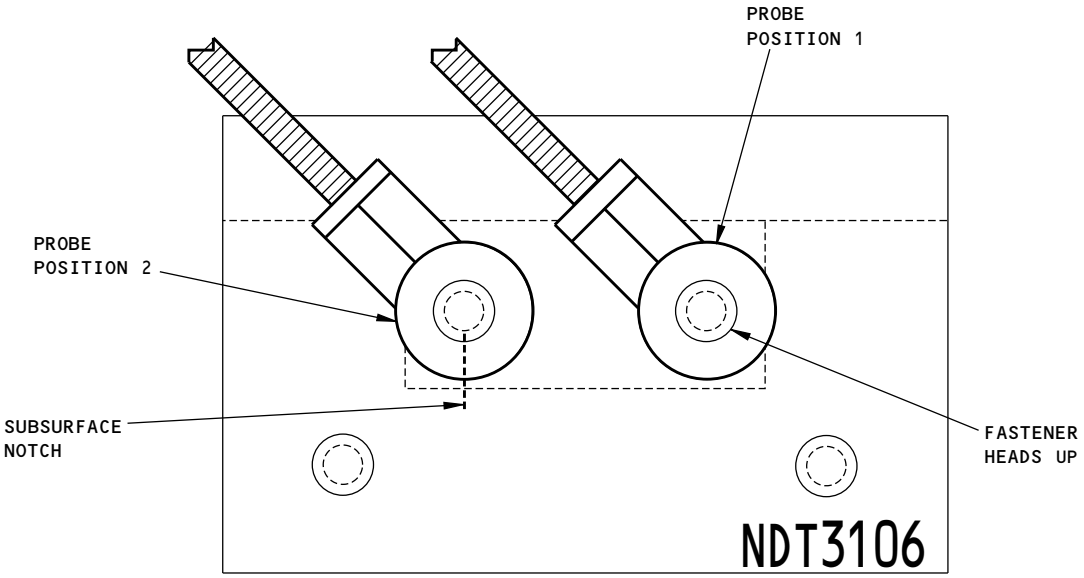

DETAIL I

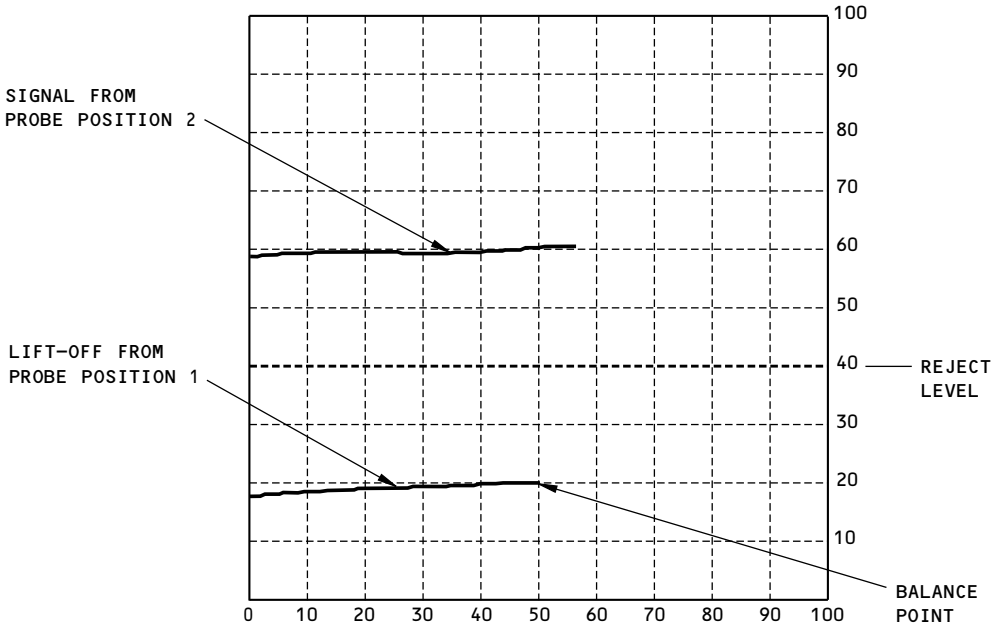

IMPEDANCE PLANE SCREEN DISPLAY
DETAIL II

2162370 S0000473195_V1

Calibration And Probe Position
Figure 3

BOEING PROPRIETARY - Copyright © Unpublished Work - See title page for details

PART 6 - EDDY CURRENT

UPPER CHORD OF THE REAR SPAR BETWEEN STAB STA. 258.52 AND STAB STA BL 254.66 OF THE HORIZONTAL STABILIZER (HFEC)

1. Purpose

A. Use this procedure to help find surface cracks in the upper chord at the rear spar of the horizontal stabilizer. The upper chord is examined in areas around fasteners that attach the composite skin panel to the aft flange of the upper chord between STAB STA 258.52 and STAB BL 254.66 of the horizontal stabilizer. The inspection areas are shown in Figure 1. It is not necessary to examine the fastener locations at the hinge ribs.

B. 737 Maintenance Planning Document (MPD) Damage Tolerance Record (DTR) Check Form Reference:

(1) Item: 55-10-04-4b

2. Equipment

A. General

(1) Use inspection equipment that can be calibrated on the reference standard as specified in Paragraph 4.

(2) Refer to Part 1, 51-01-00, for data about the equipment manufacturers.

B. Instrument

(1) Use an eddy current instrument that:

(a) Has an impedance plane display.

(b) Operates at a frequency range of 50 to 500 kHz.

(2) The instruments that follow were used to help prepare this procedure.

(a) Nortec 1000; Staveley

(b) Locator 2d; Hocking

(3) Probes

(a) A shielded straight or right-angle probe with a minimum drop of 0.5 inch (13 mm) is necessary to do this inspection.

(b) Refer to Part 6, 51-00-00, Procedure 23, paragraph 3.C, for data about probe selection.

(c) The probe that follows was used to help prepare this procedure.

1) MTF905-50; NDT Engineering Corp. (Olympus)

C. Reference Standards

(1) Use reference standard 188A, or an equivalent, as given in Part 6, 51-00-00, Procedure 23, paragraph 3.D.

3. Prepare for the Inspection

A. Identify the inspection locations. Refer to Figure 1.

B. Remove the lower composite skin panels that are aft of the rear spar to get access to the inspection locations.

C. Lightly smooth rough surfaces and sharp edges of chipped paint.

BOEING PROPRIETARY - Copyright © Unpublished Work - See title page for details

D. Fully clean the inspection area.

4. Instrument Calibration

A. Calibrate the equipment as specified in Part 6, 51-00-00, Procedure 23, paragraph 5. Use reference standard 188A, or an equivalent, to do the calibration.

5. Inspection Procedure

A. Examine the upper chord in the rear spar of the horizontal stabilizer for cracks as follows:

(1) Refer to Part 6, 51-00-00, Procedure 23, paragraph 6, for the inspection procedure.

(2) Examine the upper chord at the fastener locations between the hinge ribs from STAB STA 258.52 to the closure rib at STAB BL 254.66 (see Figure 1). Use the fastener collars as a probe guide.

(a) It is not necessary to examine the upper chord for cracks at the hinge rib fasteners.

B. Do Paragraph 5.A. again to examine the upper chord in the rear spar of the opposite horizontal stabilizer.

6. Inspection Results

A. Refer to Part 6, 51-00-00, Procedure 23, paragraph 7, for instructions to help make an analysis of indications that occur during the inspection.

BOEING PROPRIETARY - Copyright © Unpublished Work - See title page for details

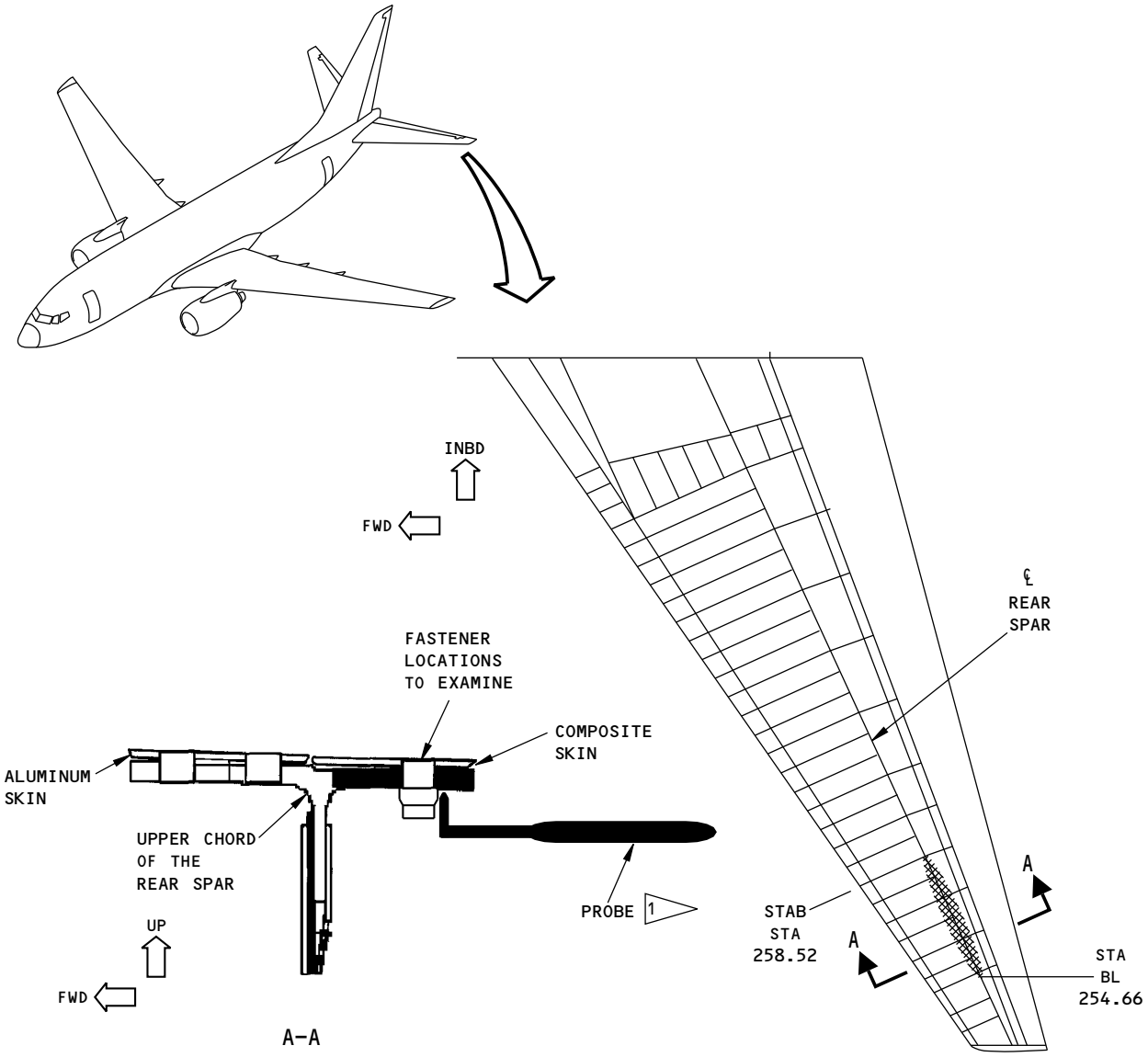

NOTES:

INSPECTION AREAS ARE BETWEEN THE HINGE RIBS.

- THE LEFT SIDE IS SHOWN;
  THE RIGHT SIDE IS OPPOSITE.

1 USE THE FASTENER COLLAR AS A PROBE GUIDE TO EXAMINE THE UPPER CHORD OF THE REAR SPAR.

2162371 S0000473198_V1

Inspection Areas
Figure 1

BOEING PROPRIETARY - Copyright © Unpublished Work - See title page for details

PART 6 - EDDY CURRENT

HORIZONTAL STABILIZER - UPPER CHORD OF THE FRONT SPAR FROM STAB STA 66.5 TO THE OUTBOARD CLOSURE RIB (LFEC)

1. Purpose

A. Use this procedure to help find cracks that can start at fastener holes in the aluminum upper chord of the front spar of the horizontal stabilizer. The areas to examine are identified in Figure 1.

B. 737 Maintenance Planning Document (MPD) Damage Tolerance Record (DTR) Check Form Reference:

(1) Item: 55-10-06-2A and -2B

2. Equipment

A. General

(1) Use inspection equipment that can be calibrated on the reference standard as specified in Paragraph 4.

(2) Refer to Part 1, 51-01-00, for data about the equipment manufacturers.

B. Instrument

(1) Use an eddy current instrument that can operate in the frequency range of 1.3 kHz to 2.0 kHz. The instrument that follows was used to help prepare this procedure.

(a) Nortec 500D; Olympus

C. Probe

(1) Use a reflection type ring probe that:

(a) Operates in the frequency range of 1.3 to 2.0 kHz.

(b) Has an inner diameter of 0.30 inch (7.6 mm) and a maximum outer diameter of 1.00 inch (25.4 mm).

(2) The probes that follow were used to help prepare this procedure.

(a) TEK-4059-08A-TF, 1-100 kHz, reflection type; Techna NDT

(b) RR057-6/TF, 500 Hz – 5 kHz, reflection type; Olympus NDT

D. Reference Standard

(1) Use reference standard NDT3191. See Figure 2 for data about the reference standard.

3. Prepare for the Inspection

A. Identify the inspection areas shown in Figure 1.

B. Get access to the inspection area.

C. Clean the inspection surface if necessary. Remove paint only if it is loose.

4. Instrument Calibration

A. Connect the probe and set the instrument frequency to 1.5 kHz.

B. Adjust the horizontal and vertical gain to the same value or, if the instrument has a horizontal to-vertical gain ratio, set it to 1:1.

C. Set the instrument filters as follows:

BOEING PROPRIETARY - Copyright © Unpublished Work - See title page for details

(1) Set the high-pass filter to off or zero Hz.

(2) If the instrument has a low-pass filter, do the steps that follow:

(a) Set the low-pass filter to its highest value.

(b) Decrease the filter value as necessary to get a stable dot or until the signal from the notch in the reference standard starts to decrease.

(3) For band-pass and other filter instructions, refer to the operation manual of the eddy current instrument.

D. If the inspection area is painted, put a shim of equal thickness that is not conductive on top of the reference standard. The thickness of the shim must not be more than 0.003 inch (0.076 mm) more than the total thickness of the paint.

E. Put the probe on the reference standard at Position 1. See Detail I in Figure 3.

F. Adjust the probe so the fastener is in the center of the probe. See Detail I in Figure 3.

G. Balance the instrument.

H. Move the probe a small quantity as necessary until the signal from the hole is at a minimum and again balance the instrument.

I. Set the instrument balance point to 20 percent of full screen height (FSH) and 50 percent of full screen width (FSW) as shown in Detail II of Figure 3.

J. Adjust the instrument lift-off so the signal moves horizontally to the left when the probe is lifted off the reference standard. See Detail II in Figure 3.

K. Move the probe to Position 2 on the reference standard. See Detail I in Figure 3. Adjust the probe so the fastener is in the center of the probe.

L. Adjust the gain to set the signal from the reference notch to 60 percent of FSH as shown in Detail II of Figure 3.

M. Do Paragraph 4.E. thru Paragraph 4.H., and Paragraph 4.K. again to be sure the sensitivity is set correctly. Do Paragraph 4.L. if the sensitivity is not set correctly.

5. Inspection Procedure

A. Calibrate the instrument as specified in Paragraph 4.

B. Set the airplane baseline signal for a satisfactory fastener location in the forward row as follows:

(1) Put the probe above one of the fasteners in the fastener row to be examined. Adjust the probe so the fastener is in the center of the probe.

(2) Balance the instrument.

(3) Compare the signal of two or more adjacent fasteners in the same fastener row with the signal from the first fastener.

NOTE: Do not change the instrument sensitivity to find the baseline signal.

(4) Use the fastener from this group that has the smallest signal as the baseline signal for the fastener row to be examined. Examine this fastener frequently during the inspection to make sure the instrument baseline has not changed.

C. Balance the instrument on the baseline fastener.

D. Do an inspection of all fastener locations in the same fastener row for which the instrument is calibrated. See Figure 1.

BOEING PROPRIETARY - Copyright © Unpublished Work - See title page for details

E. Refer to Paragraph 6. for instructions to help make an analysis of fastener locations with signals that are 40 percent or more of FSH.

F. Do Paragraph 5.B. thru Paragraph 5.E. to examine the aft fastener row for cracks.

G. Do Paragraph 5.B. thru Paragraph 5.F. to examine the same inspection area on the opposite horizontal stabilizer.

6. Inspection Results

A. A signal that is 40 percent or more of full screen height is a sign of a possible crack and more analysis is necessary.

B. Compare the signal that occurs during the inspection to the signal from the notch in the reference standard.

C. Conditions that can cause crack type signals are:

(1) A change in the distance between fasteners. See if the same location on the opposite horizontal stabilizer has the same distance between fasteners. If it is the same, then compare the results from the two locations. If it is not the same, then go to Paragraph 6.D. and do the open hole eddy current inspection.

(2) A steel fastener has been installed. It will be necessary to make a new reference standard with the same type of steel fasteners installed. Use the data from NDT3191 to help make the new reference standard. If a new reference standard with steel fasteners is necessary, make the identification of this reference standard “NDT3191-Steel Fasteners”.

D. If a crack indication is found, do an open hole eddy current inspection as given in Part 6, 51-00-00, Procedure 16.

BOEING PROPRIETARY - Copyright © Unpublished Work - See title page for details

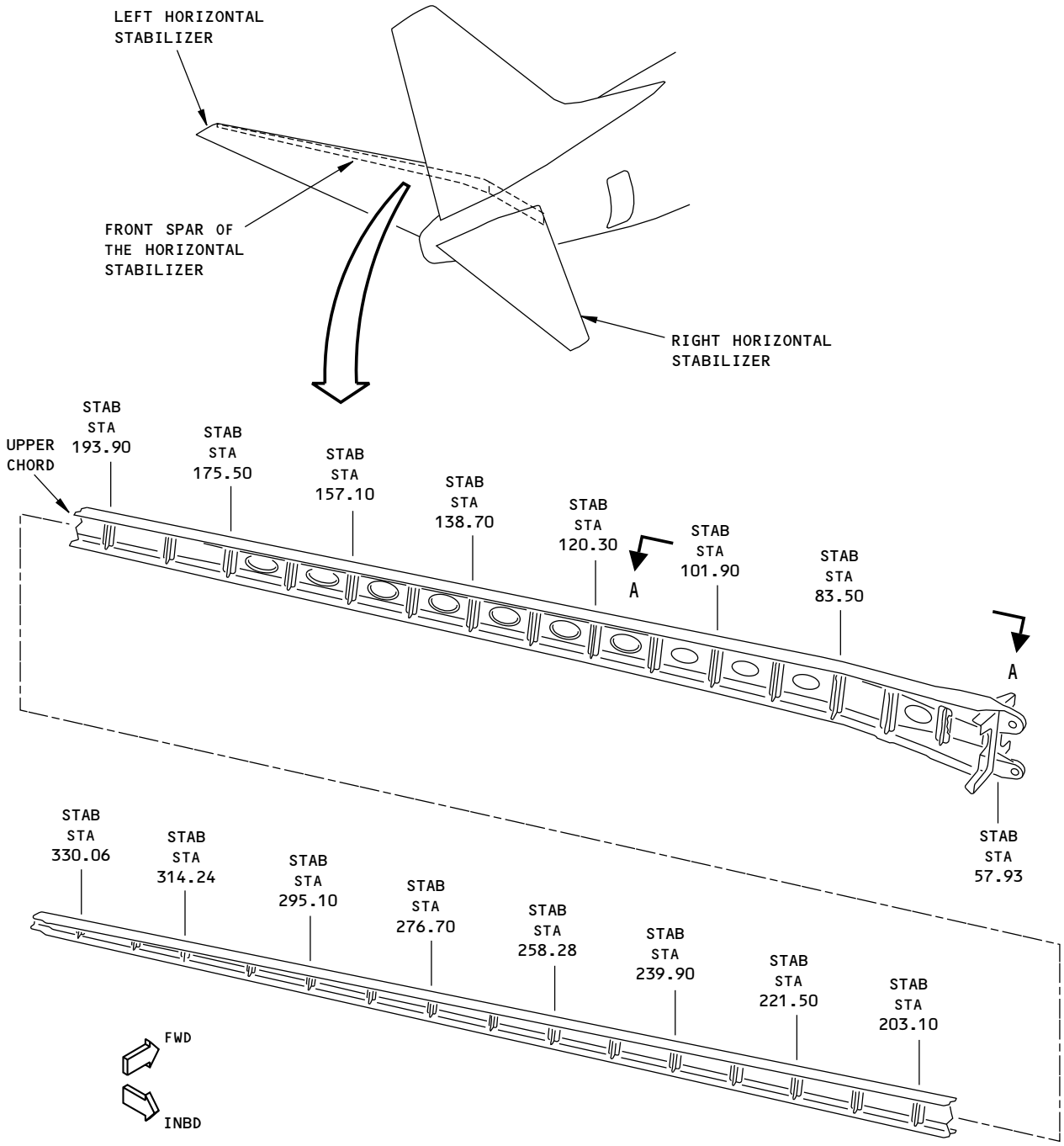

FRONT SPAR OF THE HORIZONTAL STABILIZER
(THE LEFT SIDE IS SHOWN; THE RIGHT SIDE IS OPPOSITE)

2162372 S0000473201_V1

Inspection Areas
Figure 1 (Sheet 1 of 2)

BOEING PROPRIETARY - Copyright © Unpublished Work - See title page for details

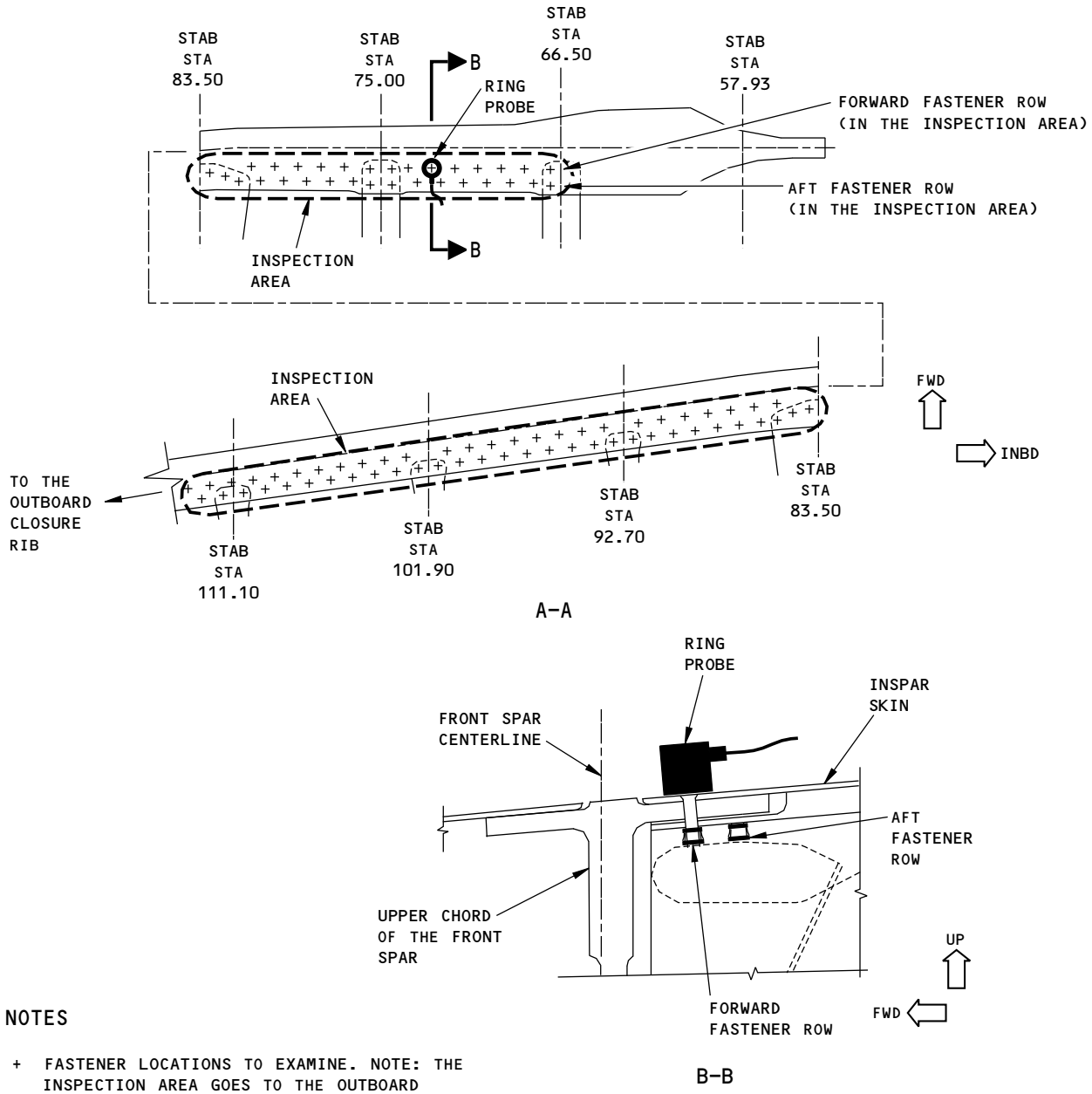

NOTES

+ FASTENER LOCATIONS TO EXAMINE. NOTE: THE INSPECTION AREA GOES TO THE OUTBOARD CLOSURE RIB. ONLY SOME OF THE FASTENERS IN THE INSPECTION AREA ARE SHOWN ABOVE.

- THE LEFT SIDE IS SHOWN; THE RIGHT SIDE IS OPPOSITE
- DO THIS INSPECTION ON THE LEFT AND RIGHT HORIZONTAL STABILIZERS.
- REFER TO PARAGRAPH 6 TO MAKE AN ANALYSIS OF ALL SIGNALS THAT ARE AT OR ABOVE THE REJECT LEVEL.

2162373 S0000473202_V1

Inspection Areas
Figure 1 (Sheet 2 of 2)

BOEING PROPRIETARY - Copyright © Unpublished Work - See title page for details

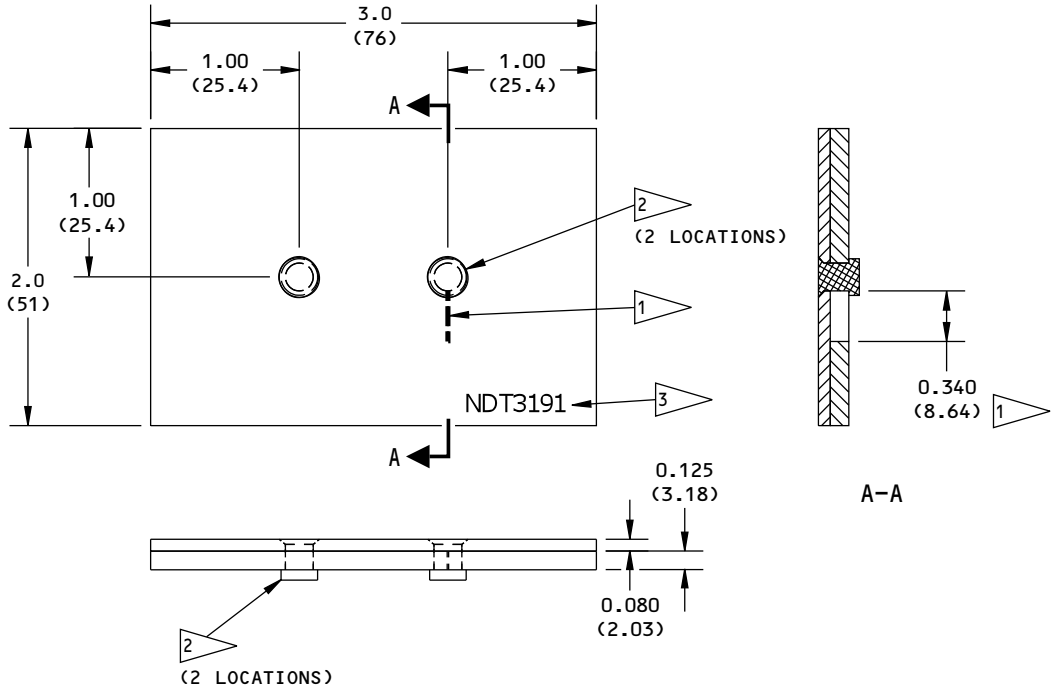

NOTES:

- ALL DIMENSIONS ARE IN INCHES (MILLIMETERS ARE IN PARENTHESES)
- TOLERANCE (UNLESS SPECIFIED DIFFERENTLY):

INCHES	MILLIMETERS
X.XXX = ±0.005	X.XX = ±0.010
X.XX = ±0.025	X.X = ±0.05
X.X = ±0.050	X = ±1

- MATERIAL: 2017-T4, 2014-T3XX, 2014-T4XXX, 2219-T6X, 2219-T8XXX, 2219-T87 OR 7075-T6 ALUMINUM (CLAD OR BARE) WITH A CONDUCTIVITY BETWEEN 31-35 IACS
- SURFACE ROUGHNESS: 63 Ra OR BETTER

1 EDM NOTCH:
WIDTH: 0.010 (0.25) MAXIMUM
DEPTH: THROUGH THE THICKNESS
LENGTH: 0.340 (8.64)

2 FASTENERS:
USE BACR15GF6* RIVETS

ALTERNATIVE FASTENERS CAN BE USED IF THEY HAVE THE SAME CONFIGURATION AS THE FASTENERS SPECIFIED

3 ETCH OR STAMP THE REFERENCE STANDARD NUMBER, NDT3191, AT APPROXIMATELY THIS LOCATION

2162375 S0000473203_V2

Reference Standard NDT3191
Figure 2

BOEING PROPRIETARY - Copyright © Unpublished Work - See title page for details

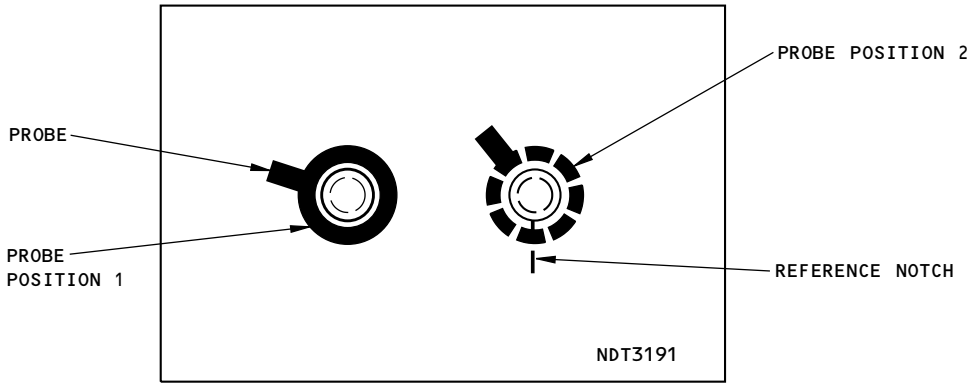

DETAIL I

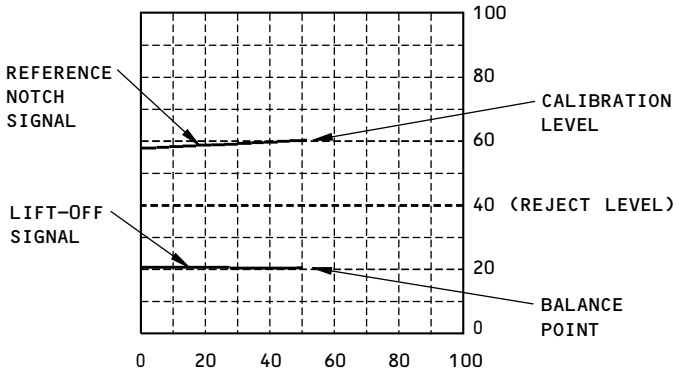

EXAMPLE SCREEN DISPLAY OF A
SATISFACTORY INSTRUMENT
CALIBRATION

DETAIL II

NOTES:

- REFER TO PARAGRAPH 4 FOR INSTRUCTIONS ON HOW TO CALIBRATE THE INSTRUMENT.
- THE SCREEN DISPLAY SHOWN ABOVE CAN BE DIFFERENT BY A SMALL QUANTITY WITH DIFFERENT INSTRUMENTS AND PROBES.

2162376 S0000473204_V2

Instrument Calibration
Figure 3

BOEING PROPRIETARY - Copyright © Unpublished Work - See title page for details

SURFACE INSPECTION OF THE UPPER AND LOWER CHORDS OF THE ELEVATOR HINGE RIBS AT ELEV STA 66, 121 AND 176 OF THE HORIZONTAL STABILIZER

1. Purpose

A. Use this procedure to help find surface cracks around the fastener holes that attach the skin panels to the upper and lower chords of the elevator hinge ribs at ELEV STA 66, 121 and 176 of the horizontal stabilizer, between the rear spar and the trailing edge beam. The inspection areas are shown in Figure 1. It is necessary to remove the upper and lower trailing edge skin panels to get access to the hinge ribs.

B. 737 Maintenance Planning Document (MPD) Damage Tolerance Record (DTR) Check Form Reference:

(1) Item: 55-10-08-13

(2) Item: 55-10-08-14

2. Equipment

A. General

(1) Use inspection equipment that can be calibrated on the reference standard as specified in Paragraph 4.

(2) Refer to Part 1, 51-01-00, for data about the equipment manufacturers.

B. Instrument

(1) Use an eddy current instrument that:

(a) Has an impedance plane display.

(b) Operates at a frequency range of 50 to 500 kHz.

(2) The instruments that follow were used to help prepare this procedure.

(a) Nortec 1000; Staveley

(b) Locator 2d; Hocking

C. Probes

(1) Use a shielded straight or right-angle probe to do this inspection.

(2) Refer to Part 6, 51-00-00, Procedure 23, paragraph 3.C, for data about probe selection.

(3) The probe that follows was used to help prepare this procedure.

(a) MTF905-50; NDT Engineering Corp. (Olympus)

D. Reference Standards

(1) Use reference standard 126, or an equivalent, as given in Part 6, 51-00-00, Procedure 23, paragraph 3.D.

E. Circle Template

(1) Use a nonconductive circle template as a probe guide to help find a 0.10 inch (2.5 mm) crack from the edge of the fastener hole.

3. Prepare for the Inspection

A. Identify the inspection areas shown in Figure 1.

BOEING PROPRIETARY - Copyright © Unpublished Work - See title page for details

B. Remove the upper and lower trailing edge skin panels that are aft of the rear spar to get access to the inspection locations.

C. Lightly smooth rough surfaces and sharp edges of chipped paint.

D. Fully clean the inspection area.

4. Instrument Calibration

A. Calibrate the equipment as specified in Part 6, 51-00-00, Procedure 23, paragraph 5. Use reference standard 126, or an equivalent, to do the calibration.

5. Inspection Procedure

A. Examine the upper and lower chords of the hinge ribs for cracks at ELEV STA 66, 121 and 176 of the horizontal stabilizer, between the rear spar and the trailing edge beam, as shown in Figure 1 and as follows.

(1) Refer to Part 6, 51-00-00, Procedure 23, paragraph 6, for the inspection procedure.

(2) Use the circle template as a probe guide to examine around the fastener holes that are used to attach the upper and lower trailing edge skin panels to the upper and lower chords of the hinge ribs between the rear spar and the trailing edge beam.

B. Do Paragraph 5.A. again to examine the upper and lower chords for cracks on the opposite horizontal stabilizer.

6. Inspection Results

A. Refer to Part 6, 51-00-00, Procedure 23, paragraph 7, for instructions to help make an analysis of indications that occur during the inspection.

BOEING PROPRIETARY - Copyright © Unpublished Work - See title page for details

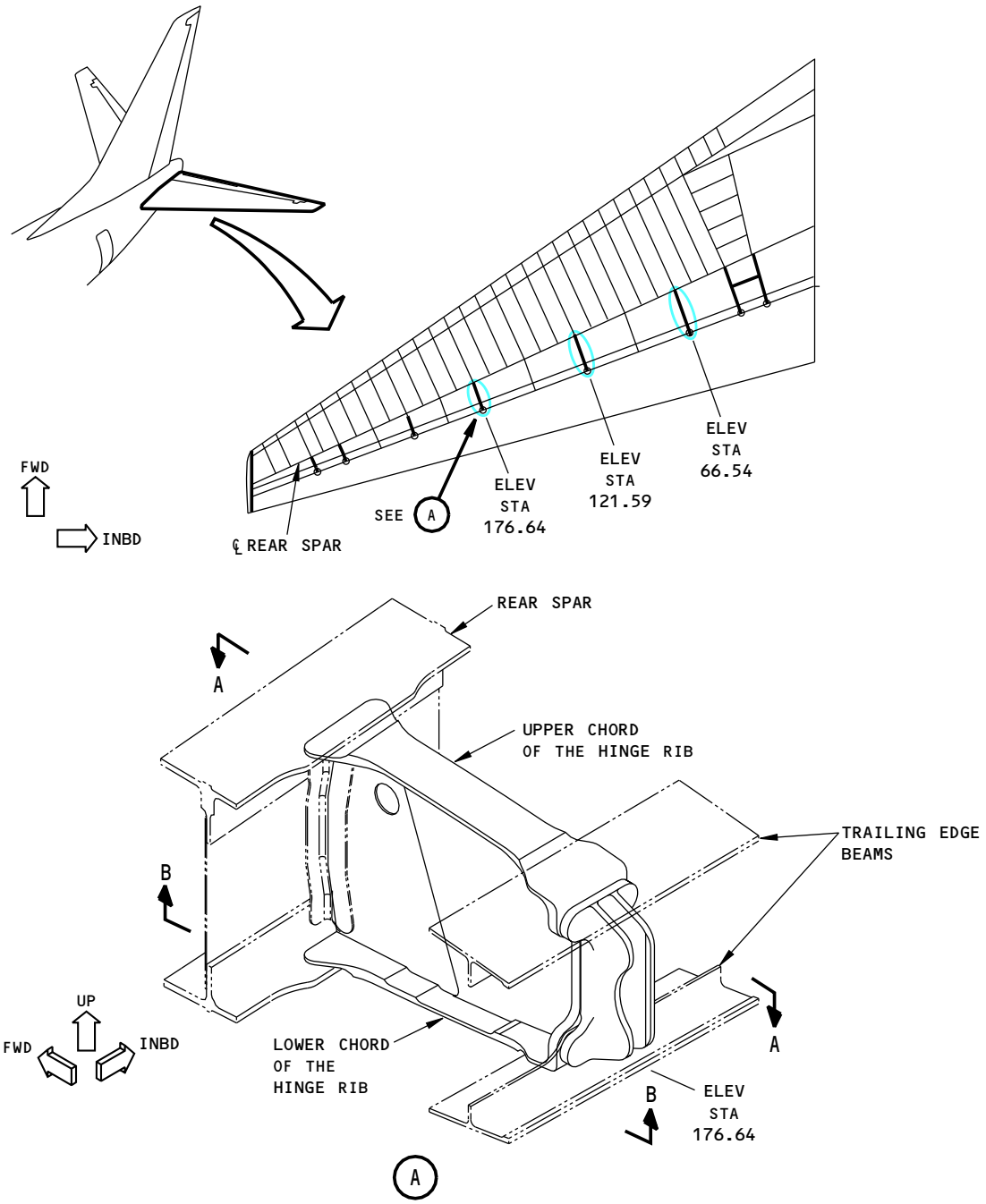

NOTES:

- THE LEFT HORIZONTAL STABILIZER IS SHOWN; THE RIGHT HORIZONTAL STABILIZER IS OPPOSITE.
- THE HINGE RIB AT ELEV STA 176.64 IS SHOWN; THE HINGE RIBS AT ELEV STA 66.54 AND 121.59 ARE ALMOST THE SAME.

2162377 S0000473207_V1

Inspection Areas
Figure 1 (Sheet 1 of 2)

BOEING PROPRIETARY - Copyright © Unpublished Work - See title page for details

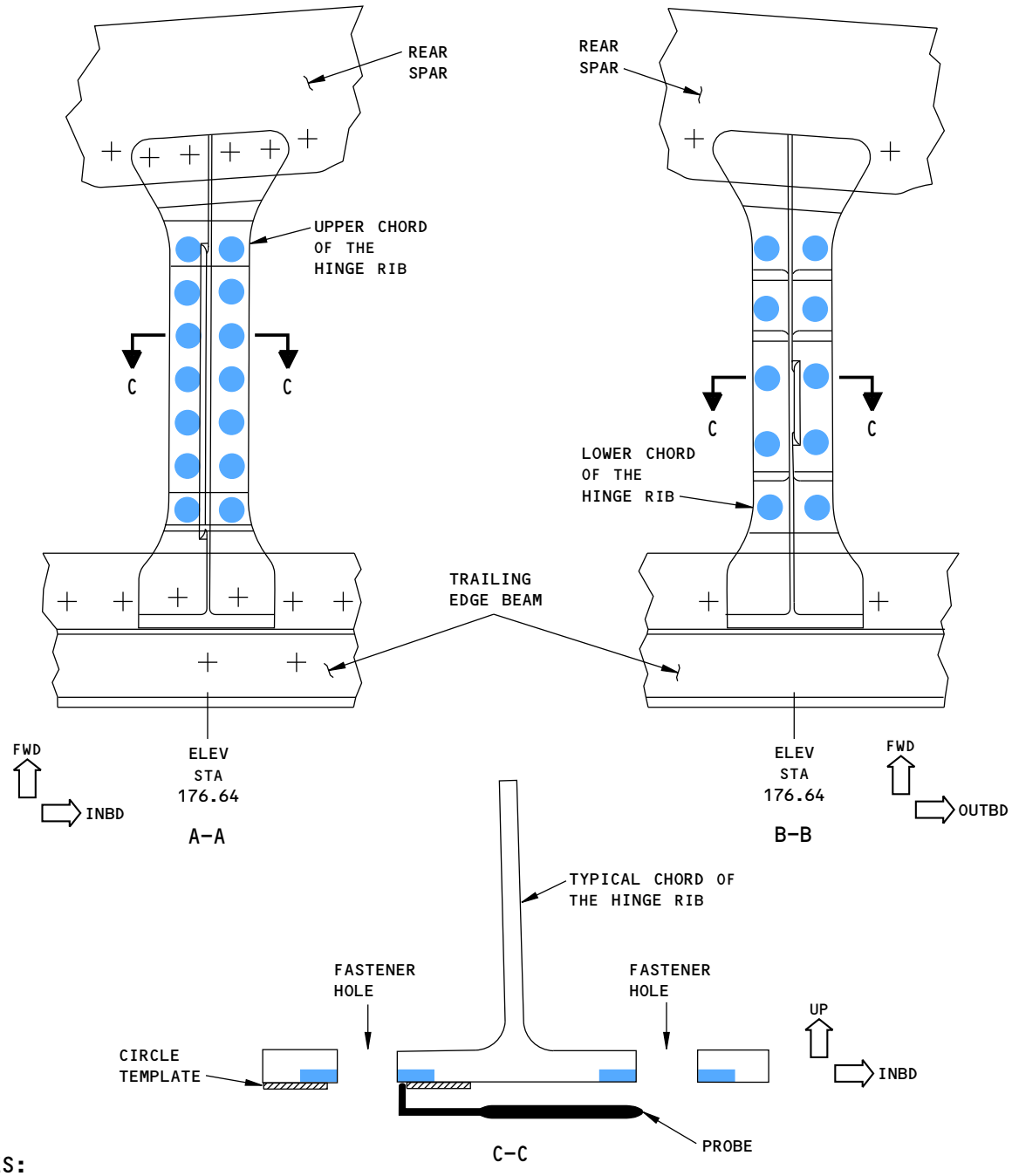

NOTES:

INSPECTION LOCATIONS

- THE HINGE RIB AT ELEV STA 176.64 IS SHOWN; THE HINGE RIBS AT ELEV STA 66.54 AND 121.59 ARE ALMOST THE SAME.

2162379 S0000473208_V1

Inspection Areas
Figure 1 (Sheet 2 of 2)

BOEING PROPRIETARY - Copyright © Unpublished Work - See title page for details

HORIZONTAL STABILIZER - REAR SPAR - TERMINAL FITTINGS OF THE UPPER CHORD

1. Purpose

A. Use this procedure to do a surface inspection to find cracks in the upper terminal fittings of the rear spar of the upper chord. The terminal fittings are made of titanium. See Figure 1 for the inspection area.

B. This inspection procedure examines the forward and aft sides of the fitting at the three most inboard fastener locations where the terminal fitting is attached to the upper chord of the rear spar. See Figure 1 for the inspection area.

C. This procedure uses a straight pencil probe with a flexible shaft to make a complete scan around the fastener head and nut.

D. Access to the inspection areas on the forward side of the rear spar is made through an access hole (332EB/342EB) in the lower skin, nearest to the rear spar. Access to the inspection areas on the aft side of the rear spar is made through the lower trailing edge panel (333BB/343BB).

E. Service Bulletin Reference: 737-55-1090

F. 737 Damage Tolerance Rating DTR (D626A001-DTR):

(1) Item: 55-10-05-2A

2. Equipment

A. General

(1) Use inspection equipment that can be calibrated on the reference standard as specified in Paragraph 4.

(2) Refer to Part 1, 51-01-00, for data about the equipment manufacturers.

B. Instrument

(1) Use an eddy current instrument that:

(a) Has an impedance plane display.

(b) Operates at a frequency range between 1 and 2 MHz.

(2) The instruments that follow were used to help prepare this procedure.

(a) Phasec 2d; GE Inspection Technologies

(b) Nortec 2000D; Olympus NDT

C. Probe

(1) Use a shielded, straight pencil probe that has a maximum diameter of 0.13 inches (3.2 mm) and a flexible shaft that is from 3 to 5 inches (76 to 127 mm) long. Refer to Part 6, 51-00-00, Procedure 14, paragraph 3.B, for data about probe selection.

(a) The probes that follow were used to help prepare this procedure.

1) TPENFLX-4; Techna NDT

2) MTF-40FX-1-3M; Olympus NDT

D. Reference Standard

(1) Use reference standard 1004 (or an equivalent) as given in Part 6, 51-00-00, Procedure 14, paragraph 3.C.

BOEING PROPRIETARY - Copyright © Unpublished Work - See title page for details

3. **Prepare for the Inspection**

   A. Identify the inspection areas shown in Figure 1.

   B. Get access to the inspection areas.

      (1) Remove access door 332EB or 342EB, as applicable, to get access to the inspection areas on the forward side of the rear spar.

      (2) Remove the lower trailing edge access panel, 333BB or 343BB, as applicable, to get access to the inspection areas on the aft side of the rear spar.

   C. Clean the inspection areas. Remove all sealant and corrosion preventative coating from around the fastener head and nut. It is recommended to use the sealant scraper that is identified in the ultrasonic inspection procedure, Part 4, 55-10-13.

   D. If the surface is rough, make it smooth by approved procedures. It is not necessary to remove paint unless it is loose.

4. **Instrument Calibration**

   A. Calibrate the equipment as specified in Part 6, 51-00-00, Procedure 14, paragraph 5. Use reference standard 1004 (or an equivalent) and the titanium bolt.

5. **Inspection Procedure**

   A. Do the surface inspection at the fastener locations shown in Figure 1 as follows:

      (1) Calibrate the instrument as specified in Paragraph 4.A.

      (2) Make complete scans around the fastener head and nut to examine the forward and aft sides of the terminal fitting for cracks. Use the fastener head and nut as probe guides. See Figure 1 for the inspection areas.

         (a) Refer to Part 6, 51-00-00, Procedure 14, paragraph 6, for the inspection procedure. Refer to paragraph 6.D.(3) for instructions to help examine around a fastener head or nut.

   B. Examine the forward and aft sides of the terminal fitting on the opposite side of the airplane for cracks.

6. **Inspection Results**

   A. Refer to Part 6, 51-00-00, Procedure 14, paragraph 7, for instructions to help make an analysis of indications that occur during the inspection.

BOEING PROPRIETARY - Copyright © Unpublished Work - See title page for details

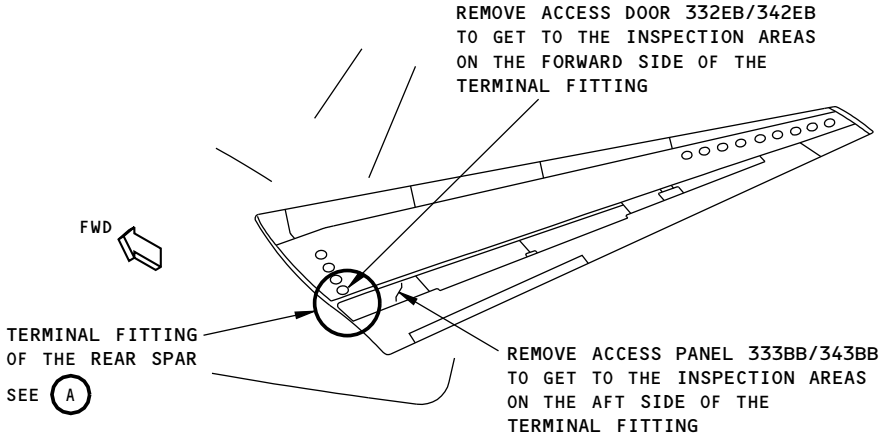

VIEW FROM BELOW
THE LEFT SIDE IS SHOWN;
THE RIGHT SIDE IS OPPOSITE

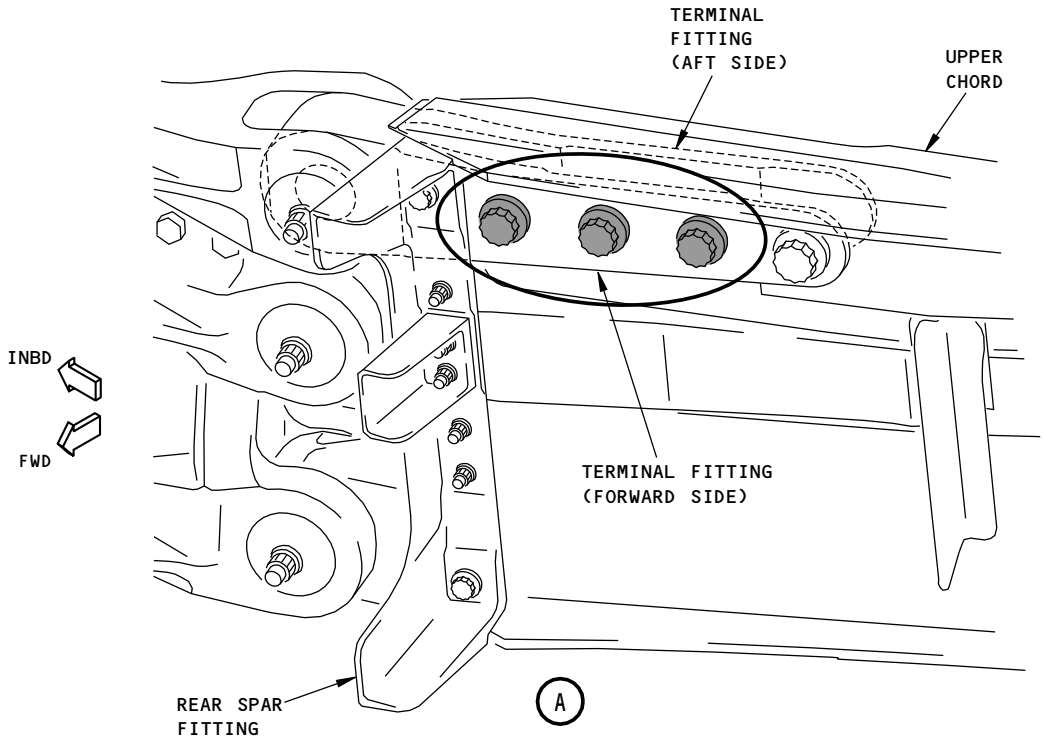

REAR SPAR
THE FORWARD SIDE IS SHOWN;
THE AFT SIDE IS OPPOSITE

NOTES:

● FASTENER LOCATIONS TO EXAMINE. MAKE A COMPLETE SCAN AROUND THE FASTENER HEAD AND NUT TO EXAMINE THE FORWARD AND AFT SIDES OF THE TERMINAL FITTING FOR CRACKS.

2162381 S0000473210_V1

Horizontal Stabilizer - Rear Spar - Inspection Area of the Upper Terminal Fitting
Figure 1

BOEING PROPRIETARY - Copyright © Unpublished Work - See title page for details

SURFACE INSPECTION OF THE HINGE PLATE AT HORIZONTAL STABILIZER ELEVATOR STATIONS 121, 176, 213, 250

1. Purpose

A. Use this procedure to help find surface cracks in the steel hinge plate of the horizontal stabilizer elevator. The areas to examine are identified in Figure 1.

B. 737 Maintenance Planning Document (MPD) Damage Tolerance Record (DTR) Check Form Reference:

(1) Item: 55-10-08-1

(2) Item: 55-10-08-2

2. Equipment

A. General

(1) Use inspection equipment that can be calibrated on the reference standard as specified in Paragraph 4.

NOTE: The hinge plates examined by this procedure are made of high permeability steel.

(2) Refer to Part 1, 51-01-00, for data about the equipment manufacturers.

B. Instrument

(1) Use an eddy current instrument that:

(a) Has an impedance plane display.

(b) Operates at a frequency range of 50 to 500 kHz.

(2) The instrument that follows was used to help prepare this procedure.

(a) Nortec 19eII; Olympus NDT

C. Probes

(1) A non-shielded, 0.125 inch (3.18 mm) diameter, straight surface probe with a maximum drop of 0.5 inch (13 mm) is necessary for this inspection.

(2) Refer to Part 6, 51-00-00, Procedure 24, paragraph 3.C, for data about probe selection.

(3) The probe that follows was used to help prepare this procedure.

(a) UMP-50; Olympus NDT

D. Reference Standards

(1) Use reference standard 185, or an equivalent, as given in Part 6, 51-00-00, Procedure 24, paragraph 3.D.(1).

E. Special Tools

(1) Use a nonconductive circle template as shown in Part 6, 51-00-00, Procedure 24, Figure 9, or an equivalent.

3. Prepare for the Inspection

A. Remove the elevator from the airplane to do this inspection.

B. Identify the inspection areas shown in Figure 1.

BOEING PROPRIETARY - Copyright © Unpublished Work - See title page for details

C. Remove the hinge plates from the assembly.

D. Remove loose paint, dirt and sealant from the surface of the inspection area.

4. Instrument Calibration

A. Calibrate the equipment as specified in the calibration instructions of Part 6, 51-00-00, Procedure 24, paragraph 5. Use reference standard 185, or an equivalent, for the calibration.

5. Inspection Procedure

A. Examine the hinge plates identified in Figure 1 for cracks as specified in the inspection instructions of Part 6, 51-00-00, Procedure 24, paragraph 6, and as follows:

(1) Make a scan around the outer edge of each spherical bearing on the hinge plate at the locations identified in Figure 1. Use a nonconductive circle template as a probe guide to keep the probe a constant distance from the edge of the spherical bearing.

(2) Use a circle template that has a diameter that is 0.28 inch (7.1 mm) larger than the spherical bearing diameter as specified in Table 1.

(3) Examine the other side of the hinge plate.

6. Inspection Results

A. Refer to Part 6, 51-00-00, Procedure 24, paragraph 7, for instructions to help make an analysis of indications that occur during the inspection.

Table 1: Circle Template Diameter Chart

Elevator Station	Nonconductive Circle Template Diameter*[1]
121	1.73 inch (43.9 mm) and 1.12 inch (28.4 mm)
176	1.73 inch (43.9 mm) and 1.12 inch (28.4 mm)
213	1.38 inch (35.1 mm) and 1.03 inch (26.2 mm)
250	1.38 inch (35.1 mm) and 1.03 inch (26.2 mm)

*[1] The diameters specified in Table 1 are applicable only when a 0.125 inch (3.18 mm) diameter pencil probe is used. If a pencil probe with a different diameter is used, use a circle template with a diameter that will let the probe find a 0.10 inch (2.5 mm) long crack that starts at the edge of the hole (bore) and grows out.

BOEING PROPRIETARY - Copyright © Unpublished Work - See title page for details

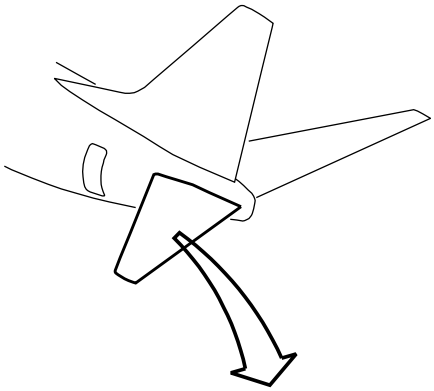

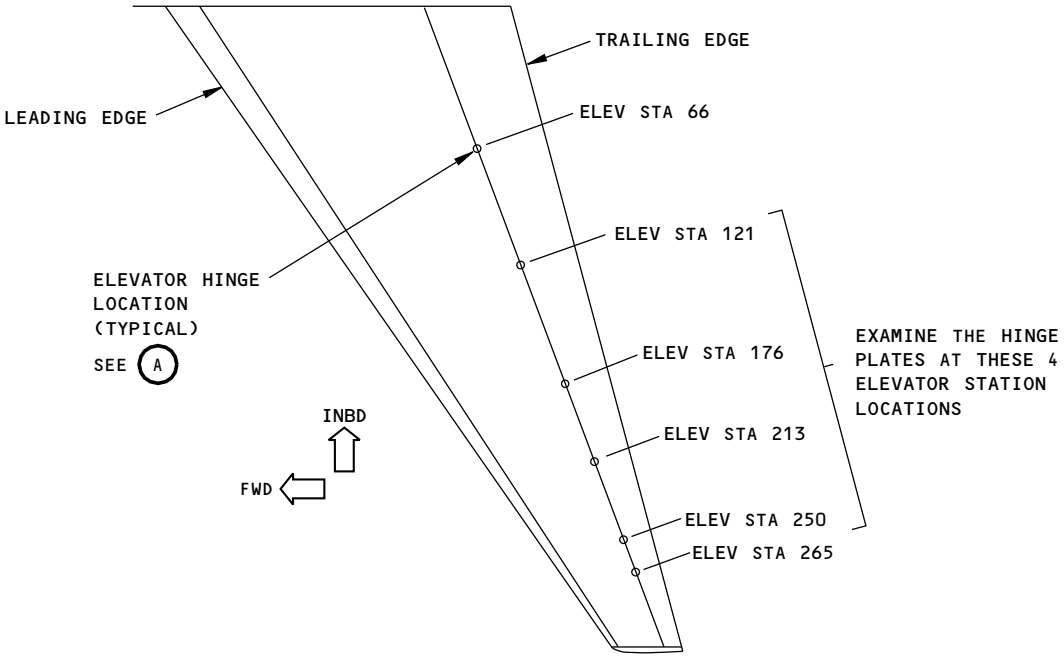

NOTES:

- THE LEFT HORIZONTAL STABILIZER IS SHOWN;
  THE RIGHT HORIZONTAL STABILIZER IS OPPOSITE.

2162382 S0000473212_V1

Inspection Areas
Figure 1 (Sheet 1 of 2)

BOEING PROPRIETARY - Copyright © Unpublished Work - See title page for details

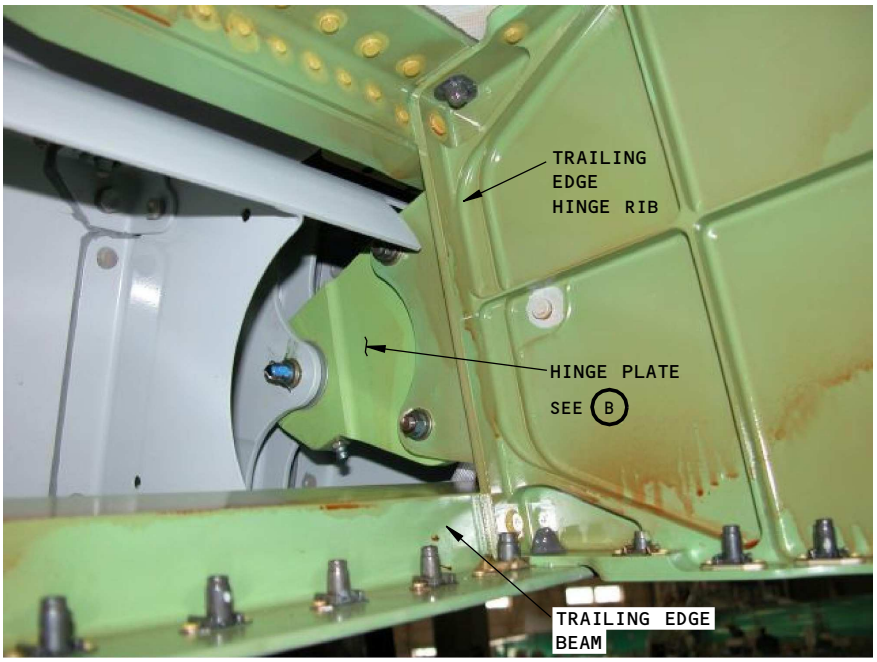

A

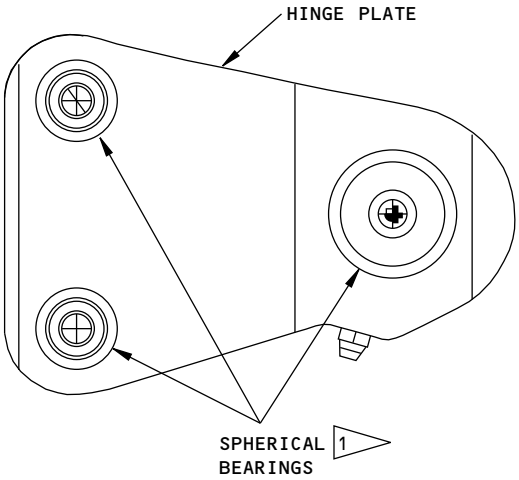

B

1 MAKE A SCAN AROUND ALL THREE SPHERICAL BEARINGS ON EACH SIDE OF THE HINGE PLATE. USE A NONCONDUCTIVE CIRCLE TEMPLATE THAT HAS A DIAMETER THAT IS 0.28 INCH (7.1 mm) LARGER THAN THE BEARING DIAMETER AS A PROBE GUIDE.

2162383 S0000473213_V2

Inspection Areas
Figure 1 (Sheet 2 of 2)

BOEING PROPRIETARY - Copyright © Unpublished Work - See title page for details

PART 6 - EDDY CURRENT

SURFACE INSPECTION OF THE HINGE PLATE AT HORIZONTAL STABILIZER ELEVATOR STATIONS 66 AND 265

1. Purpose

A. Use this procedure to help find surface cracks in the aluminum hinge plate of the horizontal stabilizer elevator. The areas to examine are identified in Figure 1.

B. 737 Maintenance Planning Document (MPD) Damage Tolerance Record (DTR) Check Form Reference:

(1) Item: 55-10-08-3

(2) Item: 55-10-08-4

2. Equipment

A. General

(1) Use inspection equipment that can be calibrated on the reference standard as specified in Paragraph 4.

NOTE: The hinge plates examined by this procedure are made of aluminum.

(2) Refer to Part 1, 51-01-00, for data about the equipment manufacturers.

B. Instrument

(1) Use an eddy current instrument that:

(a) Has an impedance plane display.

(b) Operates at a frequency range of 50 to 500 kHz.

(2) The instrument that follows was used to help prepare this procedure.

(a) Nortec 19eII; Olympus NDT

C. Probes

(1) A shielded, 0.125 inch (3.18 mm) diameter, straight probe is necessary for this inspection.

(2) Refer to Part 6, 51-00-00, Procedure 23, paragraph 3.C for data about probe selection.

(3) The probe that follows was used to help prepare this procedure.

(a) MP-50; Olympus NDT

D. Reference Standards

(1) Use reference standard 126, or an equivalent, as given in Part 6, 51-00-00, Procedure 23, paragraph 3.D.(1).

E. Special Tools

(1) Use a nonconductive circle template to help keep the probe a constant distance from the bearing as shown in Part 6, 51-00-00, Procedure 23, Figure 9.

3. Prepare for the Inspection

A. Remove the elevator from the airplane to do this inspection.

B. Identify the inspection areas shown in Figure 1.

C. Remove the hinge plates from the assembly.

BOEING PROPRIETARY - Copyright © Unpublished Work - See title page for details

D. Remove loose paint, dirt and sealant from the surface of the inspection area.

4. Instrument Calibration

A. Calibrate the equipment as specified in the calibration instructions of Part 6, 51-00-00, Procedure 23, paragraph 5. Use reference standard 126, or an equivalent, for the calibration.

5. Inspection Procedure

A. Examine the hinge plates identified in Figure 1 for cracks as specified in the inspection instructions of Part 6, 51-00-00, Procedure 23, paragraph 6 and as follows:

(1) Make a scan around the outer edge of each spherical bearing on the hinge plate at the locations identified in Figure 1. Use a nonconductive circle template as a probe guide to keep the probe a constant distance from the edge of the spherical bearing.

(2) Use a circle template that has a diameter that is 0.28 inch (7.1 mm) larger than the spherical bearing diameter as specified in Table 1.

(3) Examine the other side of the hinge plate.

6. Inspection Results

A. Refer to Part 6, 51-00-00, Procedure 23, paragraph 7, for instructions to help make an analysis of indications that occur during the inspection.

Table 1: Circle Template Diameter Chart

Elevator Station	Nonconductive Circle Template Diameter*[1]
66	1.73 inch (43.9 mm) and 1.12 inch (28.4 mm)
265	1.38 inch (35.1 mm) and 1.03 inch (26.2 mm)

*[1] The diameters specified in Table 1 are applicable only when a 0.125 inch (3.18 mm) diameter pencil probe is used. If a pencil probe with a different diameter is used, use a circle template with a diameter that will let the probe find a 0.10 inch (2.5 mm) long crack that starts at the edge of the hole (bore) and grows out.

BOEING PROPRIETARY - Copyright © Unpublished Work - See title page for details

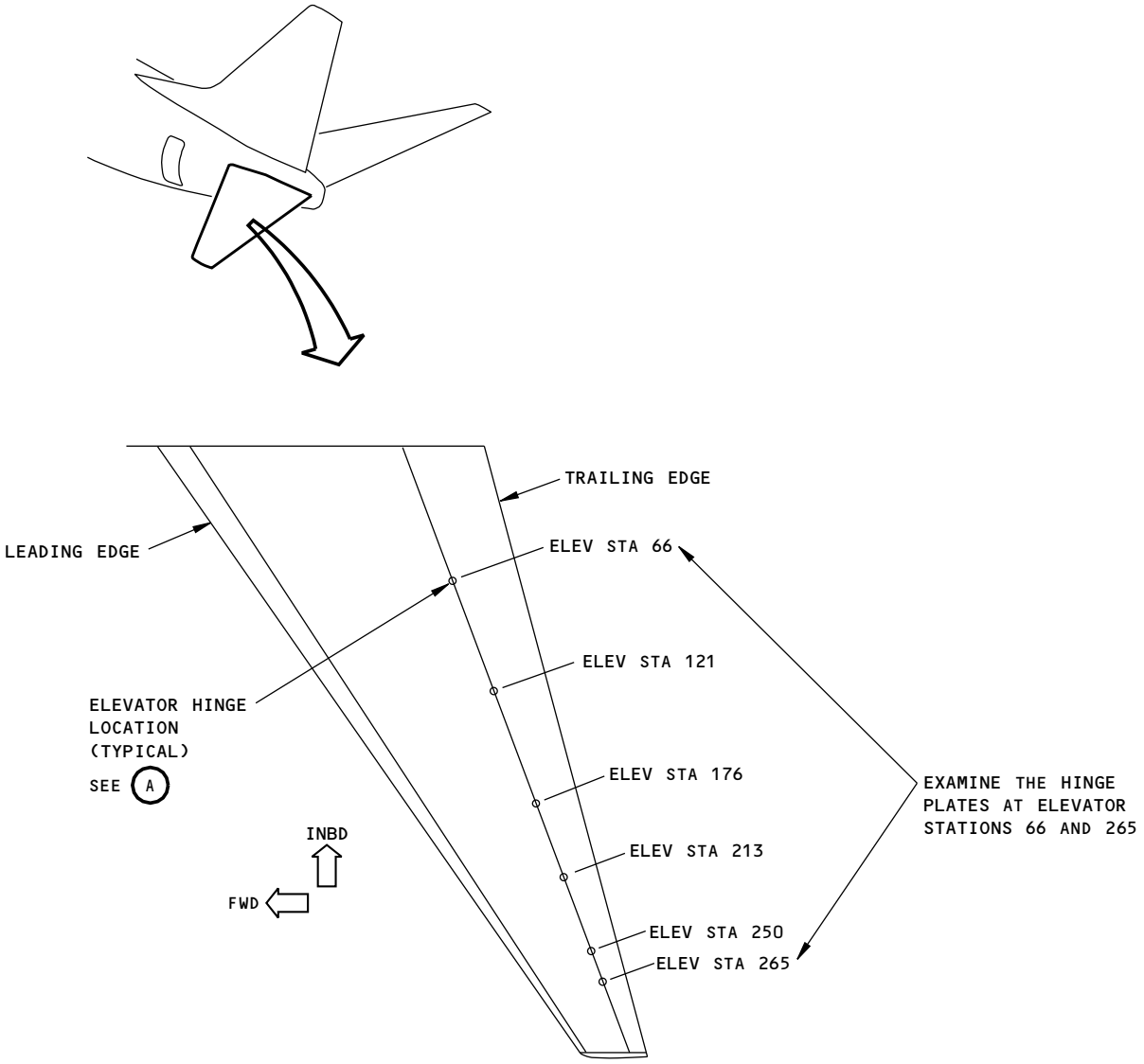

NOTES:

- THE LEFT HORIZONTAL STABILIZER IS SHOWN;
  THE RIGHT HORIZONTAL STABILIZER IS OPPOSITE.

2162384 S0000473215_V1

Inspection Areas
Figure 1 (Sheet 1 of 2)

BOEING PROPRIETARY - Copyright © Unpublished Work - See title page for details

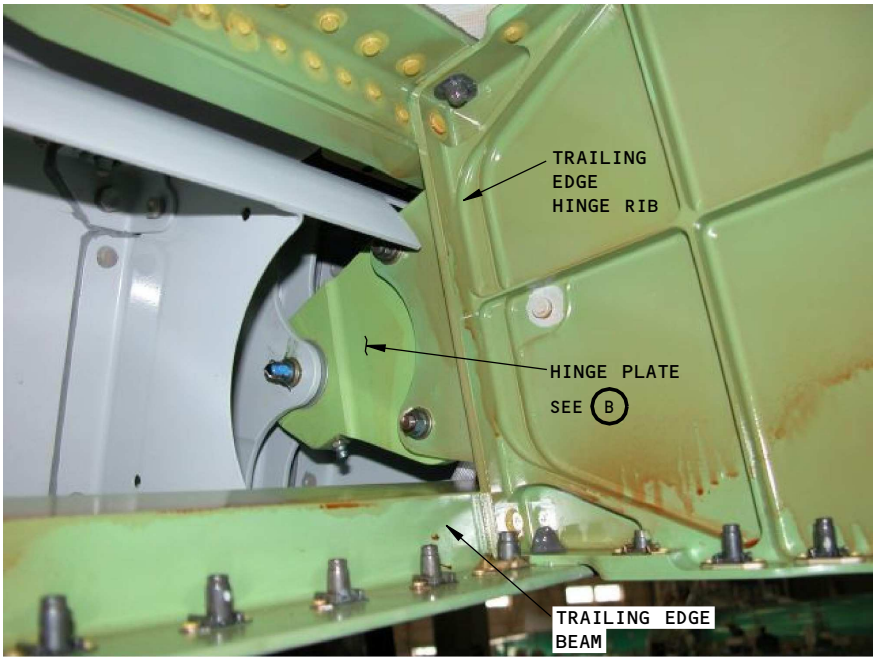

A

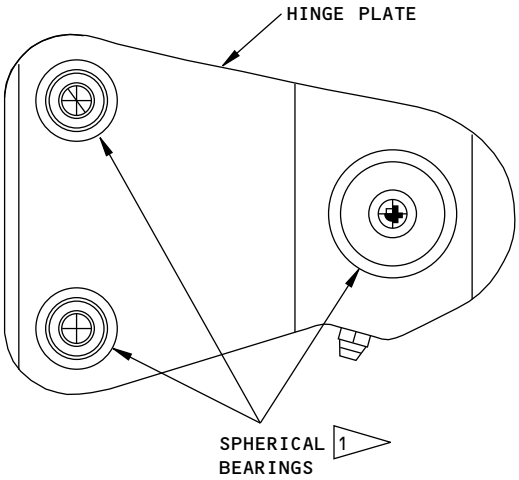

B

1 MAKE A SCAN AROUND ALL THREE SPHERICAL BEARINGS ON EACH SIDE OF THE HINGE PLATE. USE A NONCONDUCTIVE CIRCLE TEMPLATE THAT HAS A DIAMETER THAT IS 0.28 INCH (7.1 mm) LARGER THAN THE BEARING DIAMETER AS A PROBE GUIDE.

2162385 S0000473216_V2

Inspection Areas
Figure 1 (Sheet 2 of 2)

BOEING PROPRIETARY - Copyright © Unpublished Work - See title page for details

SURFACE INSPECTION OF THE HINGE RIB CHORDS AT THE REAR SPAR ATTACHMENT AT HORIZONTAL STABILIZER ELEVATOR STATIONS 66, 121, 176, 213, 250 AND 265

1. Purpose

A. Use this procedure to examine the rib chord for cracks around the fastener collars that go through the upper and lower chords of the rear spar at the horizontal stabilizer elevator. The areas to examine are identified in Figure 1.

B. 737 Maintenance Planning Document (MPD) Damage Tolerance Record (DTR) Check Form Reference:

(1) Item: 55-10-08-09

(2) Item: 55-10-08-10

(3) Item: 55-10-08-11

2. Equipment

A. General

(1) Use inspection equipment that can be calibrated on the reference standard as specified in Paragraph 4.

NOTE: The rib chords are made of aluminum.

(2) Refer to Part 1, 51-01-00, for data about the equipment manufacturers.

B. Instrument

(1) Use an eddy current instrument that:

(a) Has an impedance plane display.

(b) Operates at a frequency range of 50 to 500 kHz.

(2) The instrument that follows was used to help prepare this procedure.

(a) Nortec 19eII; Olympus NDT

C. Probes

(1) Use a HFEC probe that operates between 50 and 500 kHz and has a 90°, 0.5 inch (13 mm) drop. Refer to Part 6, 51-00-00, Procedure 23, paragraph 3.C, for data about probe selection.

(2) The probe that follows was used to help prepare this procedure.

(a) MP905-50; Olympus NDT

D. Reference Standards

(1) Use reference standard 126, or an equivalent, as given in Part 6, 51-00-00, Procedure 23, paragraph 3.D.(1).

3. Prepare for the Inspection

A. Identify the inspection areas shown in Figure 1.

B. Remove the elevators and panels that follow:

(1) To examine elevator stations 66 and 121, remove the lower skin panels.

(2) To examine elevator station 165, remove the lower trailing edge panels.

BOEING PROPRIETARY - Copyright © Unpublished Work - See title page for details

(3) To examine elevator stations 213, 250, and 265, remove the elevator and cove panel.

C. Remove loose paint, dirt and sealant where the probe will touch the fastener collar.

4. Instrument Calibration

A. Calibrate the equipment as specified in the calibration instructions of Part 6, 51-00-00, Procedure 23, paragraph 5. Use reference standard 126, or an equivalent, for the calibration.

5. Inspection Procedure

A. Make a scan around the outer edge of each fastener head collar to examine the rib chords for cracks at the fastener locations shown in Figure 1. Do the inspection as specified in Part 6, 51-00-00, Procedure 23, paragraph 6.

6. Inspection Results

A. Refer to Part 6, 51-00-00, Procedure 23, paragraph 7, for instructions to help make an analysis of indications that occur during the inspection.

BOEING PROPRIETARY - Copyright © Unpublished Work - See title page for details

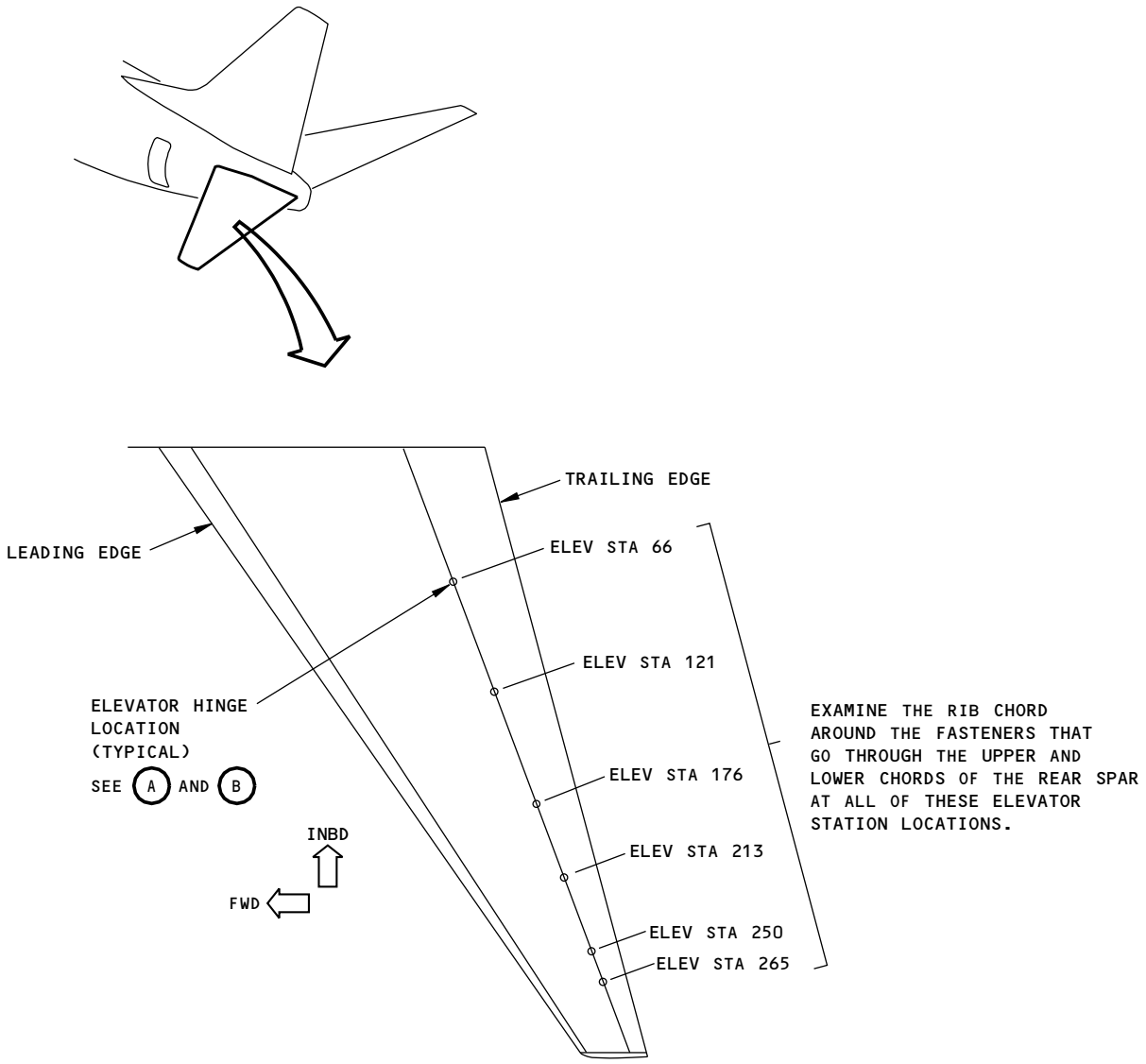

NOTES:

- THE LEFT HORIZONTAL STABILIZER IS SHOWN;
  THE RIGHT HORIZONTAL STABILIZER IS OPPOSITE.

2162386 S0000473218_V1

Inspection Areas
Figure 1 (Sheet 1 of 2)

BOEING PROPRIETARY - Copyright © Unpublished Work - See title page for details

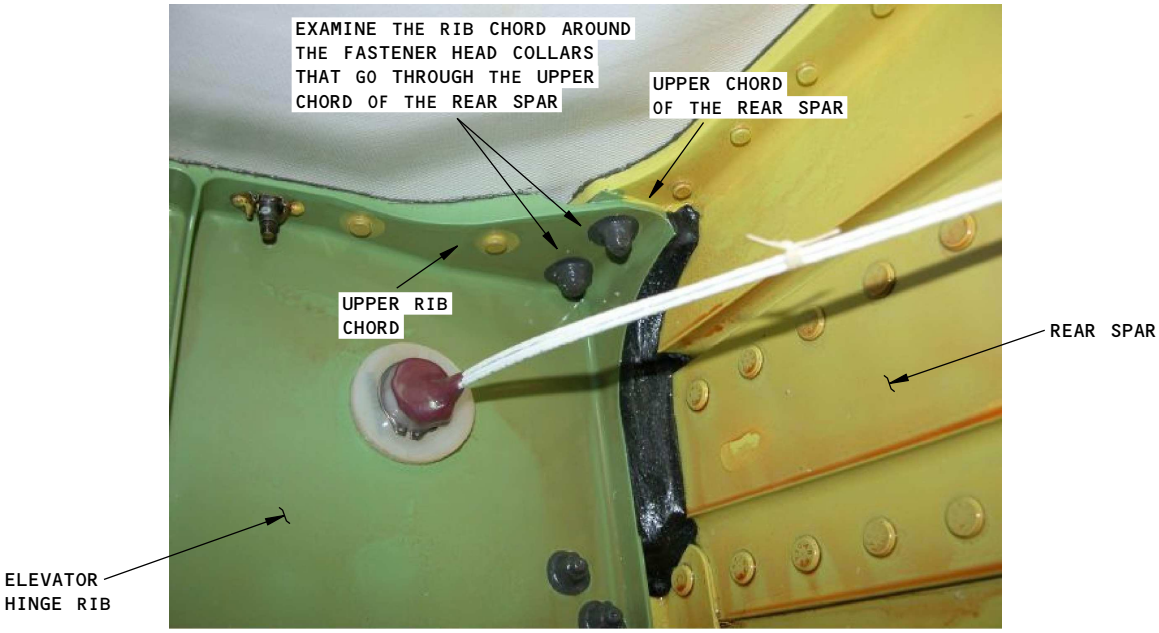

UPPER RIB CHORD INSPECTION AREA

A

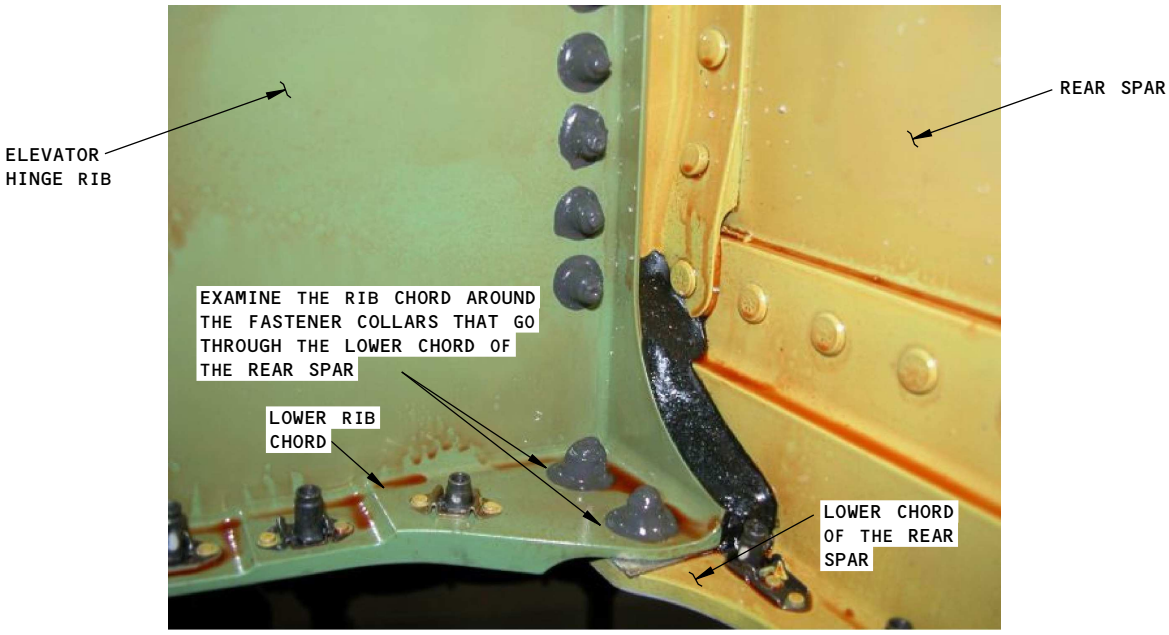

LOWER RIB CHORD INSPECTION AREA

B

2162387 S0000473219_V1

Inspection Areas
Figure 1 (Sheet 2 of 2)

BOEING PROPRIETARY - Copyright © Unpublished Work - See title page for details

PART 6 - EDDY CURRENT

PRIMARY BEAM SPLICE MEMBERS AT THE FRONT AND REAR SPARS OF THE HORIZONTAL STABILIZER

1. Purpose

A. Use this procedure to help find cracks that can start at the fastener holes of the primary beam splice members at the front and rear spars of the horizontal stabilizers. Only the splice members for the upper and lower chords are examined with this procedure. The inspection areas are identified in Figure 1.

B. 737 Maintenance Planning Document (MPD) Damage Tolerance Record (DTR) Check Form Reference:

(1) Item: 55-10-14-2

2. Equipment

A. General

(1) Use inspection equipment that can be calibrated on the reference standard as specified in Paragraph 4.

(2) Refer to Part 1, 51-01-00, for data about the equipment manufacturers.

B. Instrument

(1) Use an eddy current instrument that:

(a) Has an impedance plane display.

(b) Operates at a frequency range of 50 to 500 kHz.

(2) The instrument that follows was used to help prepare this procedure.

(a) Nortec 500; Olympus NDT

C. Probes

(1) A shielded, straight or right-angle probe is necessary for this inspection.

(2) Refer to Part 6, 51-00-00, Procedure 23, paragraph 3.C, for data about probe selection.

(3) The probe that follows was used to help prepare this procedure.

(a) Probe MP905-40; NDT Engineering Corp. (Olympus)

D. Reference Standards

(1) Use reference standard 188A, or an equivalent, as given in Part 6, 51-00-00, Procedure 23, paragraph 3.D.

3. Prepare for the Inspection

A. Get access to the inspection areas and identify the fastener locations to examine that are shown in Figure 1.

B. Remove the sealant from around the head and collar (nut) of each fastener sufficiently to make a scan around the head or collar. The sealant must be replaced after the inspections are completed.

C. Move the horizontal stabilizer up or down as necessary to get access to the inspection areas.

BOEING PROPRIETARY - Copyright © Unpublished Work - See title page for details

4. **Instrument Calibration**

   A. Calibrate the equipment as specified in the calibration instructions of Part 6, 51-00-00, Procedure 23, paragraph 5. Use reference standard 188A, or an equivalent, for the calibration.

5. **Inspection Procedure**

   A. Examine each fastener location shown in Figure 1 for cracks as specified in Part 6, 51-00-00, Procedure 23, paragraph 6, and as follows:

      (1) Keep the probe lightly against the head or collar (nut) and make a 360 degree scan around the fastener.

6. **Inspection Results**

   A. Refer to Part 6, 51-00-00, Procedure 23, paragraph 7, for instructions to help make an analysis of indications that occur during the inspection.

BOEING PROPRIETARY - Copyright © Unpublished Work - See title page for details

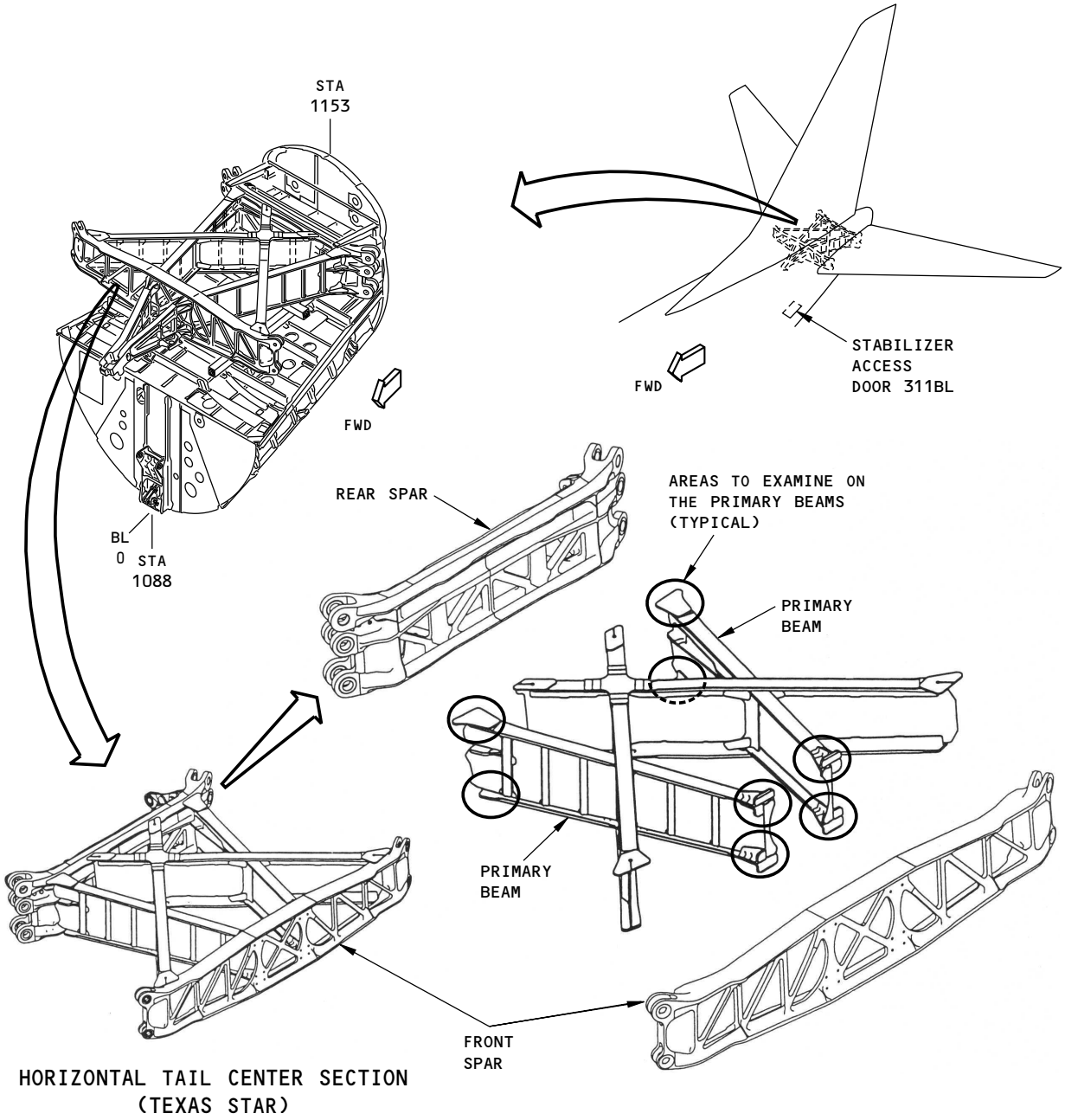

NOTES:

- THIS PROCEDURE EXAMINES THE SPLICE MEMBERS THAT ATTACH THE PRIMARY BEAMS TO THE FRONT AND REAR SPARS, AT THE UPPER AND LOWER CHORDS ONLY.

2162388 S0000473221_V2

Inspection Areas
Figure 1 (Sheet 1 of 2)

BOEING PROPRIETARY - Copyright © Unpublished Work - See title page for details

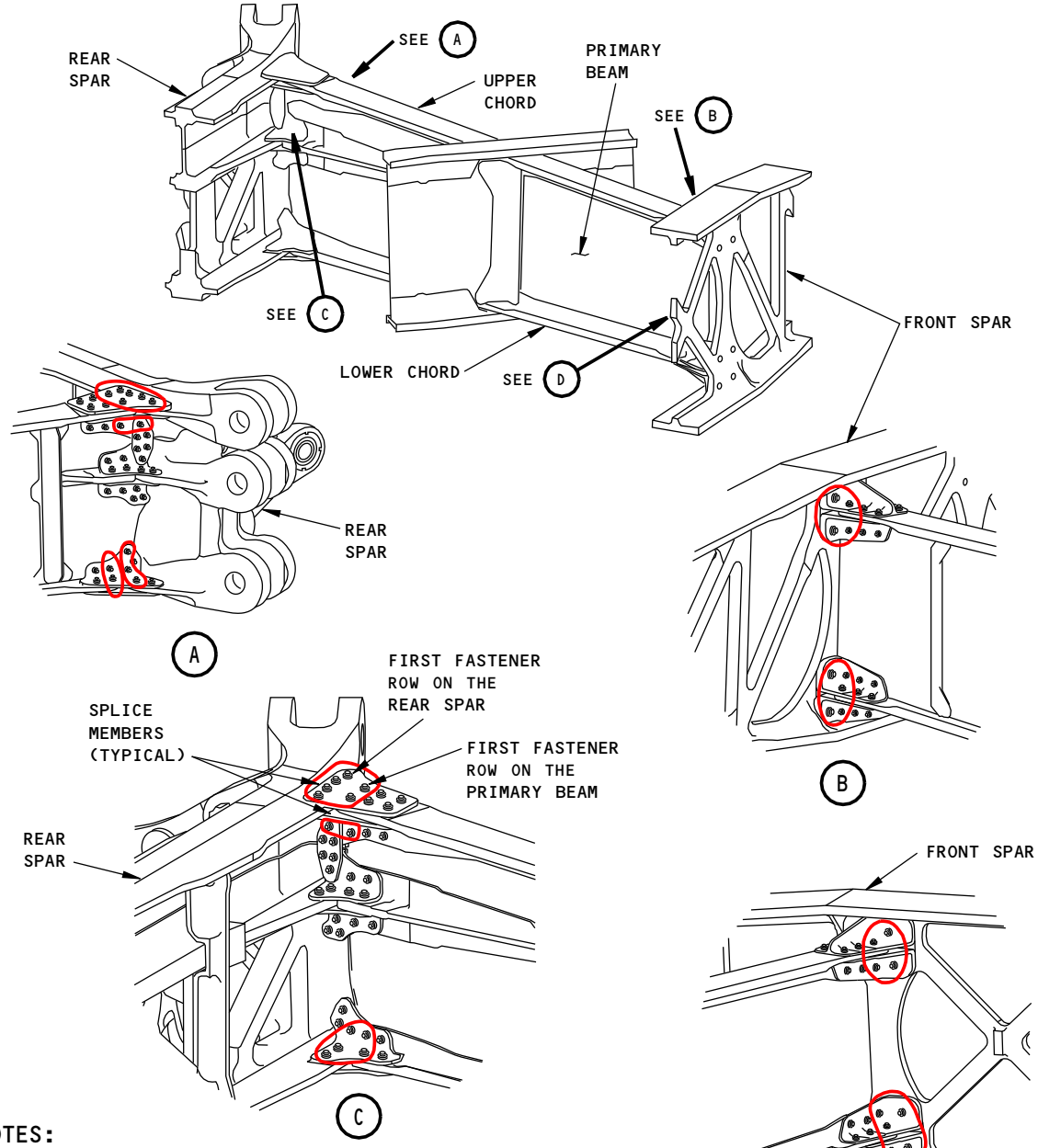

NOTES:

- EXAMINE THE SPLICE MEMBERS AT THE FIRST FASTENER ROW ON THE PRIMARY BEAMS AND THE FIRST FASTENER ROW ON THE FRONT AND REAR SPARS AS SHOWN ABOVE.
- MAKE A SCAN AROUND THE HEAD AND COLLAR (NUT) OF EACH APPLICABLE FASTENER.
- THERE ARE SPLICE MEMBERS ON THE OPPOSITE SIDES OF THE SPLICE MEMBERS THAT ARE SHOWN ABOVE. EXAMINE THESE SPLICE MEMBERS AT THE SAME FASTENER LOCATIONS THAT ARE SHOWN ABOVE.
- ONLY THE SPLICE MEMBERS AT THE UPPER AND LOWER CHORDS OF THE PRIMARY BEAMS (FORWARD AND AFT END) MUST BE EXAMINED. THE FASTENERS IN THE VERTICAL FLANGE OF THE UPPER AND LOWER CHORDS ARE INCLUDED IN THIS INSPECTION.

2162391 S0000473222_V1

Inspection Areas
Figure 1 (Sheet 2 of 2)

BOEING PROPRIETARY - Copyright © Unpublished Work - See title page for details

PART 6 - EDDY CURRENT

SPLICE PLATES THAT CONNECT THE THRUST BEAM TO THE FRONT AND REAR SPARS OF THE HORIZONTAL STABILIZER

1. Purpose

A. Use this procedure to help find cracks that can start at the fastener holes of the splice plates that connect the thrust beams to the front and rear spars of the horizontal stabilizer. The areas to examine are identified in Figure 1.

B. 737 Damage Tolerance Rating (D626A001-DTR):

(1) Item: 55-10-14-05

2. Equipment

A. General

(1) Use inspection equipment that can be calibrated on the reference standard as specified in Paragraph 4.

(2) Refer to Part 1, 51-01-00, for data about the equipment manufacturers.

B. Instrument

(1) Use an eddy current instrument that:

(a) Has an impedance plane display.

(b) Operates at a frequency range of 50 to 500 kHz.

(2) The instrument that follows was used to help prepare this procedure.

(a) Nortec 500; Olympus NDT

C. Probes

(1) A shielded, straight or right-angle probe with a maximum drop of 0.5 inch (13 mm) is necessary for this inspection.

(2) Refer to Part 6, 51-00-00, Procedure 23, paragraph 3.C, for data about probe selection.

(3) The probe that follows was used to help prepare this procedure.

(a) Probe MP905-40; NDT Engineering Corp. (Olympus)

D. Reference Standards

(1) Use reference standard 188A, or an equivalent, as given in Part 6, 51-00-00, Procedure 23, paragraph 3.D.

3. Prepare for the Inspection

A. Get access to the inspection areas and identify the fastener locations to examine as shown in Figure 1.

B. If there is sealant around the head and collar of each fastener and on the inspection surface, carefully remove the sealant. The sealant must be replaced after the inspections are completed.

C. Set the horizontal stabilizer to the applicable position (fully down or fully up) to get access to the inspection areas.

BOEING PROPRIETARY - Copyright © Unpublished Work - See title page for details

4. **Instrument Calibration**

   A. Calibrate the equipment as specified in Part 6, 51-00-00, Procedure 23, paragraph 5. Use reference standard 188A, or an equivalent, for the calibration.

5. **Inspection Procedure**

   A. Examine each fastener location for cracks as specified in Part 6, 51-00-00, Procedure 23, paragraph 6, and as follows:

      (1) Keep the probe lightly against the head or collar and make a 360 degree scan around the fastener.

      (2) Do Paragraph 5.A.(1) at each fastener in the inspection areas identified in Figure 1.

6. **Inspection Results**

   A. Refer to Part 6, 51-00-00, Procedure 23, paragraph 7, for instructions to help make an analysis of indications that occur during the inspection.

BOEING PROPRIETARY - Copyright © Unpublished Work - See title page for details

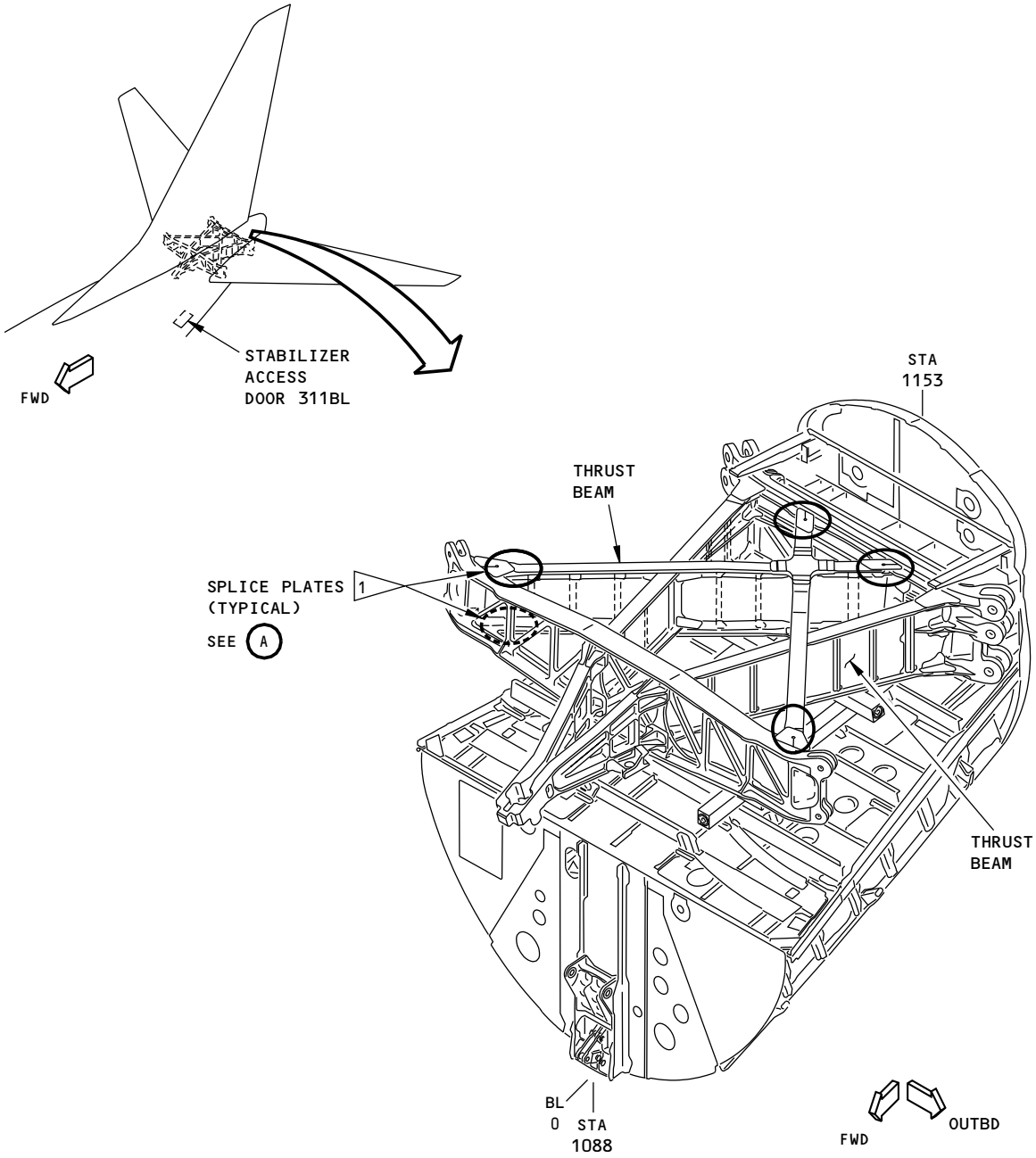

NOTES:

1 EXAMINE THE SPLICE PLATES THAT CONNECT THE UPPER AND LOWER CHORDS OF THE THRUST BEAMS TO THE FRONT AND REAR SPARS.

2162393 S0000473237_V1

Inspection Areas
Figure 1 (Sheet 1 of 2)

BOEING PROPRIETARY - Copyright © Unpublished Work - See title page for details

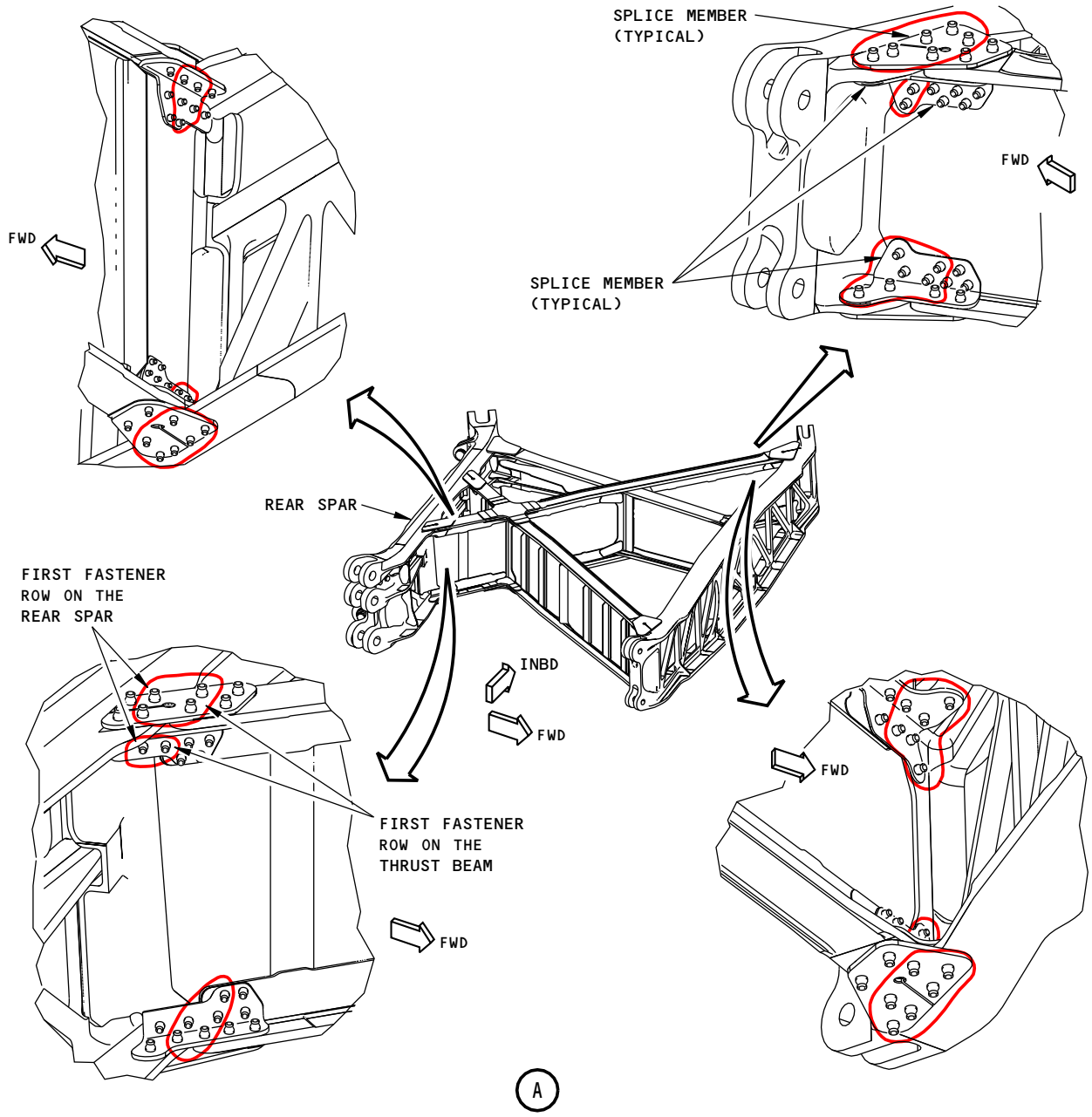

NOTES:

- EXAMINE THE SPLICE PLATES THAT CONNECT THE THRUST BEAMS TO THE FRONT AND REAR SPARS. ONLY THE FIRST ROW OF FASTENERS ON THE THRUST BEAM AND ON THE FRONT AND REAR SPARS ARE EXAMINED. THE FASTENERS IN THE VERTICAL FLANGE OF THE SPLICE PLATES ARE INCLUDED IN THIS INSPECTION.
- MAKE A SCAN AROUND THE HEAD AND COLLAR (NUT) OF EACH APPLICABLE FASTENER.
- SOME FASTENER LOCATIONS TO EXAMINE ARE NOT SHOWN IN THE ABOVE VIEWS.

2162397 S0000473238_V1

Inspection Areas
Figure 1 (Sheet 2 of 2)

BOEING PROPRIETARY - Copyright © Unpublished Work - See title page for details

PART 6 - EDDY CURRENT

UPPER CLEVIS LUG INSPECTION AT THE REAR SPAR OF THE HORIZONTAL STABILIZER CENTER SECTION (HFEC)

1. Purpose

A. Use this procedure to help find surface cracks in the upper clevis lugs at the rear spar of the horizontal stabilizer center section. The areas to examine are identified in Figure 1.

B. The clevis lugs are made of titanium (Ti-6AL-4V).

C. 737 Maintenance Planning Document (MPD) Damage Tolerance Record (DTR) Check Form Reference:

(1) Item: 55-10-12-2

2. Equipment

A. General

(1) Use inspection equipment that can be calibrated on the reference standard as specified in Paragraph 4.

(2) Refer to Part 1, 51-01-00, for data about the equipment manufacturers.

B. Instrument

(1) Use an eddy current instrument that:

(a) Has an impedance plane display.

(b) Operates at a frequency range of 100 to 500 kHz.

(2) The instrument that follows was used to help prepare this procedure.

(a) Nortec 2000D; Olympus NW NDT Inc.

C. Probes

(1) Use a shielded, right-angle pencil probe that can operate at a frequency between 100 and 500 kHz. A right-angle probe is recommended for this inspection to help move the probe around the washer when you examine the surface of the clevis lug.

(2) The probe that follows was used to help prepare this procedure.

(a) TPEN95-6B/2M; Techna NDT

(b) This is a right-angle, shielded, pencil probe with a 0.5 inch (12.7 mm) drop and a 6.0 inch (152 mm) long, 20 degree bent, handle.

NOTE: If you order this probe, make sure you tell the probe manufacturer the eddy current instrument you will use. The above probe has a Triax connector. A probe cable must be ordered separately.

D. Reference Standards

(1) Use reference standard 1002, or an equivalent as given in Part 6, 51-00-00, Procedure 14.

3. Prepare for the Inspection

A. Identify the inspection areas shown in Figure 1.

(1) Get access to the top of the horizontal stabilizer.

(2) Remove the gap cover and sliding seals.

BOEING PROPRIETARY - Copyright © Unpublished Work - See title page for details

(3) Remove the anti-rotation locks attached to the forward and aft clevis lugs (see Figure 1).

NOTE: Removal of the anti-rotation lock is necessary to get 360 degree access around the holes of the clevis lugs.

(4) Clean the clevis lug around the washer in the areas that the probe will touch.

4. Instrument Calibration

A. Calibrate the equipment as specified in the calibration instructions of Part 6, 51-00-00, Procedure 14. Use reference standard 1002, or an equivalent, for the calibration.

5. Inspection Procedure

A. Identify the four upper clevis lug surfaces to examine at the rear spar of the horizontal stabilizer center section. See Figure 1.

NOTE: The outer surface of the forward and aft clevis lugs must be examined.

(1) Calibrate the instrument to examine the clevis lugs as specified in Paragraph 4.

(2) Start the inspection on the outer surface of the aft clevis lug of the left horizontal stabilizer center section (see Figure 1).

(3) Put the probe on the aft side of the aft clevis lug so that it is adjacent to the washer and balance the instrument.

(4) Do a 360 degree scan around the washer and monitor the instrument screen display as you move the probe. Make sure the probe touches the washer and is 90 degrees to the lug inspection surface as you move it around the washer.

NOTE: Use the washer as a probe guide.

(5) Make a record of the areas that cause signals to occur that are 40% of full screen height (FSH) or higher.

(6) Do Paragraph 5.A.(3) thru Paragraph 5.A.(5) again to examine the forward side of the forward clevis lug.

(7) Do Paragraph 5.A.(3) thru Paragraph 5.A.(6) again to examine the upper clevis lugs at the rear spar of the right horizontal stabilizer center section.

6. Inspection Results

A. Areas that cause signals to occur that are 40% of FSH (or more) are areas of possible cracks and must be examined more fully.

(1) Calibrate the instrument again and do the inspection again.

(2) Compare the signals that occurred during the inspection to the signals you got from the reference standard.

B. To make sure that the clevis lug is cracked, do one of the inspections that follow:

(1) Calibrate the instrument to examine the clevis lug hole as specified in Paragraph 4.

(a) Remove the bolt and washer and do a surface eddy current inspection around the lug hole. Use the eddy current surface probe specified in Paragraph 2.C. Make sure you use a nonconductive circle template to keep the probe at a constant distance from the hole edge.

BOEING PROPRIETARY - Copyright © Unpublished Work - See title page for details

(2) Remove the bolt and bushing and do an open hole eddy current inspection as specified in Part 6, 51-00-00, Procedure 17. It is possible that the horizontal stabilizer will have to be removed to remove the bushing.

NOTE: The diameter of the clevis lug hole is 1.9 inch (49 mm).

BOEING PROPRIETARY - Copyright © Unpublished Work - See title page for details

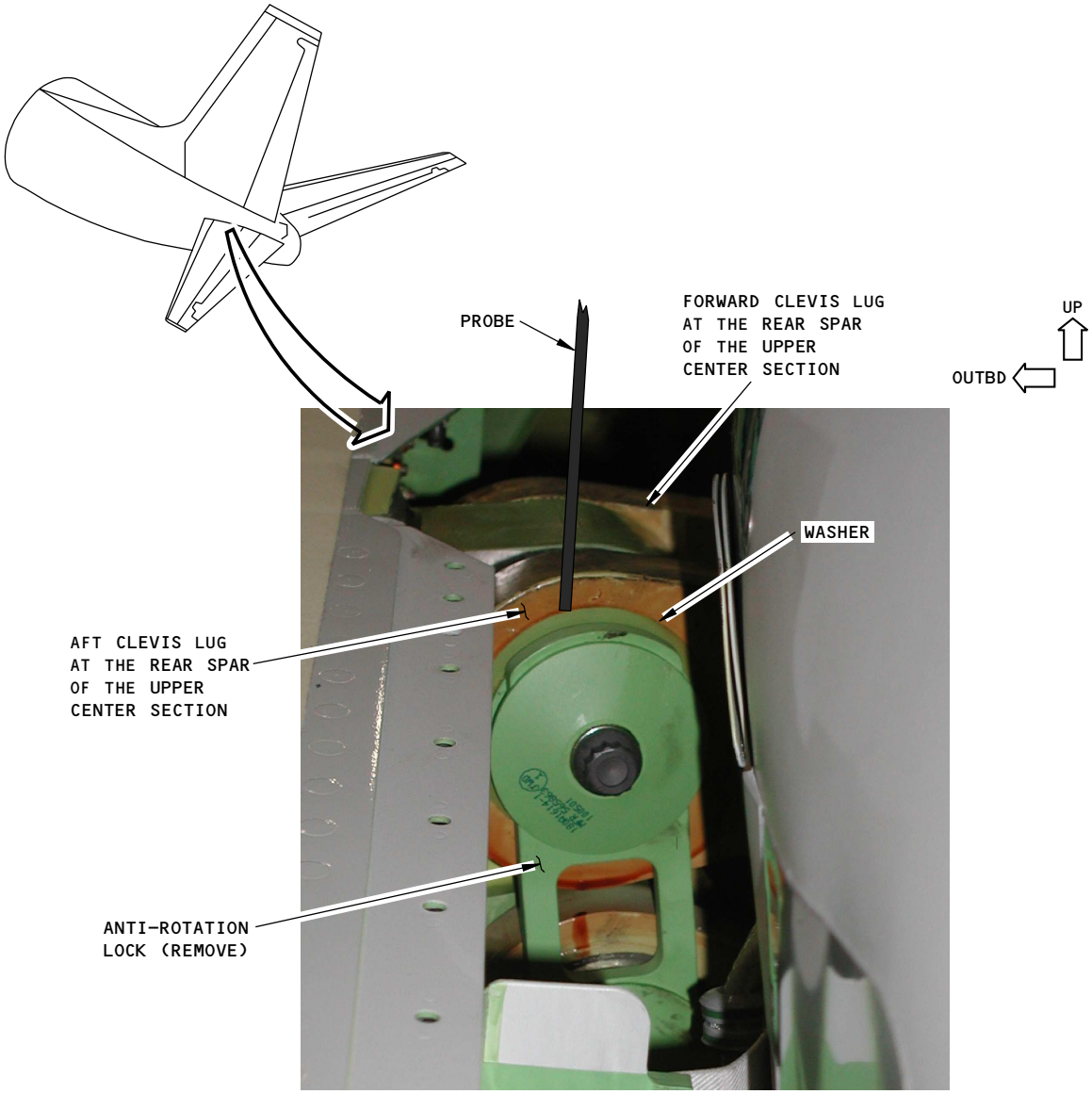

VIEW AS YOU LOOK FORWARD

NOTES:

- THE UPPER CLEVIS LUGS AT THE REAR SPAR OF THE LEFT HORIZONTAL STABILIZER CENTER SECTION ARE SHOWN; THE UPPER CLEVIS LUGS AT THE REAR SPAR OF THE RIGHT HORIZONTAL STABILIZER CENTER SECTION ARE OPPOSITE.
- THE AFT CLEVIS LUG IS SHOWN; THE FORWARD CLEVIS LUG IS ALMOST THE SAME.
- PUT THE PROBE ON THE LUG SO THAT IT IS ADJACENT TO THE WASHER AND SLOWLY MOVE THE PROBE 360 DEGREES AROUND THE WASHER.
- REMOVE THE ANTI-ROTATION LOCK TO GET 360° ACCESS TO THE CLEVIS LUG SURFACE THAT IS ADJACENT TO THE WASHER.

2162399 S0000473240_V1

Inspection Area
Figure 1

BOEING PROPRIETARY - Copyright © Unpublished Work - See title page for details

PART 6 - EDDY CURRENT

HORIZONTAL STABILIZER CENTER SECTION - WEB INSPECTION OF THE THRUST BEAMS AT STIFFENER LOCATIONS (LFEC)

1. Purpose

A. Use this subsurface eddy current procedure to help find cracks that can start at fastener holes in the aluminum web of the left and right side thrust beams. The fastener locations to examine are shown in Figure 1.

B. Service Bulletin Reference: 737-55-1091

2. Equipment

A. General

(1) Use inspection equipment that can be calibrated on the reference standard as specified in Paragraph 4.

(2) Refer to Part 1, 51-01-00, for data about the equipment manufacturers.

B. Instrument

(1) Use an eddy current instrument that can operate in the frequency range of 1 to 5 kHz. The instrument that follows was used to help prepare this procedure.

(a) Nortec 500D; Olympus

C. Probe

(1) Use a reflection type ring probe that:

(a) Operates in the frequency range that includes 1 to 5 kHz.

(b) Has a minimum inner diameter of 0.330 inch (8.38 mm) and a maximum outer diameter of 0.65 inch (16.5 mm).

(2) The probe that follows was used to help prepare this procedure.

(a) TEK-4067, 900 Hz-5 kHz; Techna NDT

D. Reference Standard

(1) Use reference standard NDT3150. See Figure 2 for data about the reference standard.

3. Prepare for the Inspection

A. Identify the inspection areas shown in Figure 1.

B. Get access to the inspection area.

C. Clean the inspection surface if necessary. Remove paint only if it is loose.

4. Instrument Calibration

NOTE: Refer to Figure 3, “Instrument Calibration”, during the instructions that follow.

A. Connect the probe and set the instrument frequency to 3.5 kHz.

B. Adjust the horizontal and vertical gain to the same value or, if the instrument has a horizontal-to-vertical gain ratio, set it to 1:1.

C. Set the instrument filters as follows:

(1) Set the high-pass filter to off or zero Hz.

BOEING PROPRIETARY - Copyright © Unpublished Work - See title page for details

(2) If the instrument has a low-pass filter, do the steps that follow:

(a) Set the low-pass filter to its highest value.

(b) Decrease the filter value to get a stable dot or until the signal from the notch in the reference standard starts to decrease.

(3) Refer to the instrument's operation manual for band-pass and other filter instructions.

D. If the inspection area is painted, put a shim that is not conductive on top of the reference standard. The shim thickness must be within ± 0.003 inch (0.076 mm) of the thickness of the paint.

E. Put the probe at Position 1 on the reference standard and adjust the probe so the fastener is in the center of the probe.

F. Balance the instrument.

G. Set the balance point to 20 percent of full screen height (FSH) and 60 percent of full screen width (FSW).

H. Adjust the instrument lift-off so the signal moves horizontally to the left when the probe is lifted off the reference standard.

I. Move the probe to Position 2 on the reference standard and adjust the probe so the fastener is in the center of the probe.

J. Adjust the gain to set the signal from the reference notch to 60 percent of FSH.

K. If an alarm gate is used, set the gate to 40 percent of FSH (reject level).

L. Do Paragraph 4.E. thru Paragraph 4.K. again to make sure the sensitivity is set correctly. If necessary, adjust the gain again to set the signal from the reference notch to 60 percent of FSH.

5. Inspection Procedure

A. Set the airplane baseline signal for a satisfactory fastener location as follows:

(1) Put the probe on one of the fasteners in the inspection area to be examined and adjust the probe so the fastener is in the center of the probe.

(2) Balance the instrument.

(3) Compare the signal of two or more other applicable fasteners with the signal from the first fastener.

NOTE: Do not change the instrument sensitivity to find the baseline signal.

(4) Use the fastener from this group that has the smallest signal as the baseline signal for the fasteners to be examined. Use this fastener as necessary during the inspection to make sure the instrument baseline did not change.

B. Balance the instrument on the baseline fastener.

C. Do an inspection of all applicable fastener locations. See Figure 1 for the fastener locations that must be examined.

NOTE: If a fastener collar is installed on the near side, it will then be necessary to remove the collar before an inspection of this fastener location can be done. It is not necessary to remove the fastener because the fastener is made of titanium and will not have an effect on the signal.

D. Do Paragraph 5.A. thru Paragraph 5.C. again to examine the same inspection areas on the opposite thrust beam.

BOEING PROPRIETARY - Copyright © Unpublished Work - See title page for details

6. **Inspection Results**

A. A signal that is 40 percent or more of full screen height is a sign of a possible crack and more analysis is necessary.

B. Compare the signal that occurs during the inspection to the signal from the notch in the reference standard.

C. Conditions that can cause crack type signals are:

(1) A change in the distance between fasteners. See if the same location on the opposite wing has the same distance between fasteners. If it is the same, then compare the results from the two locations.

(2) A steel fastener has been installed. It will be necessary to make a new reference standard with the same type of fastener installed. Use the data in Figure 2 for reference standard NDT3150 to help make the new reference standard.

D. If a crack indication is found, do an open hole eddy current inspection as specified in Part 6, 51-00-00, Procedure 16.

BOEING PROPRIETARY - Copyright © Unpublished Work - See title page for details

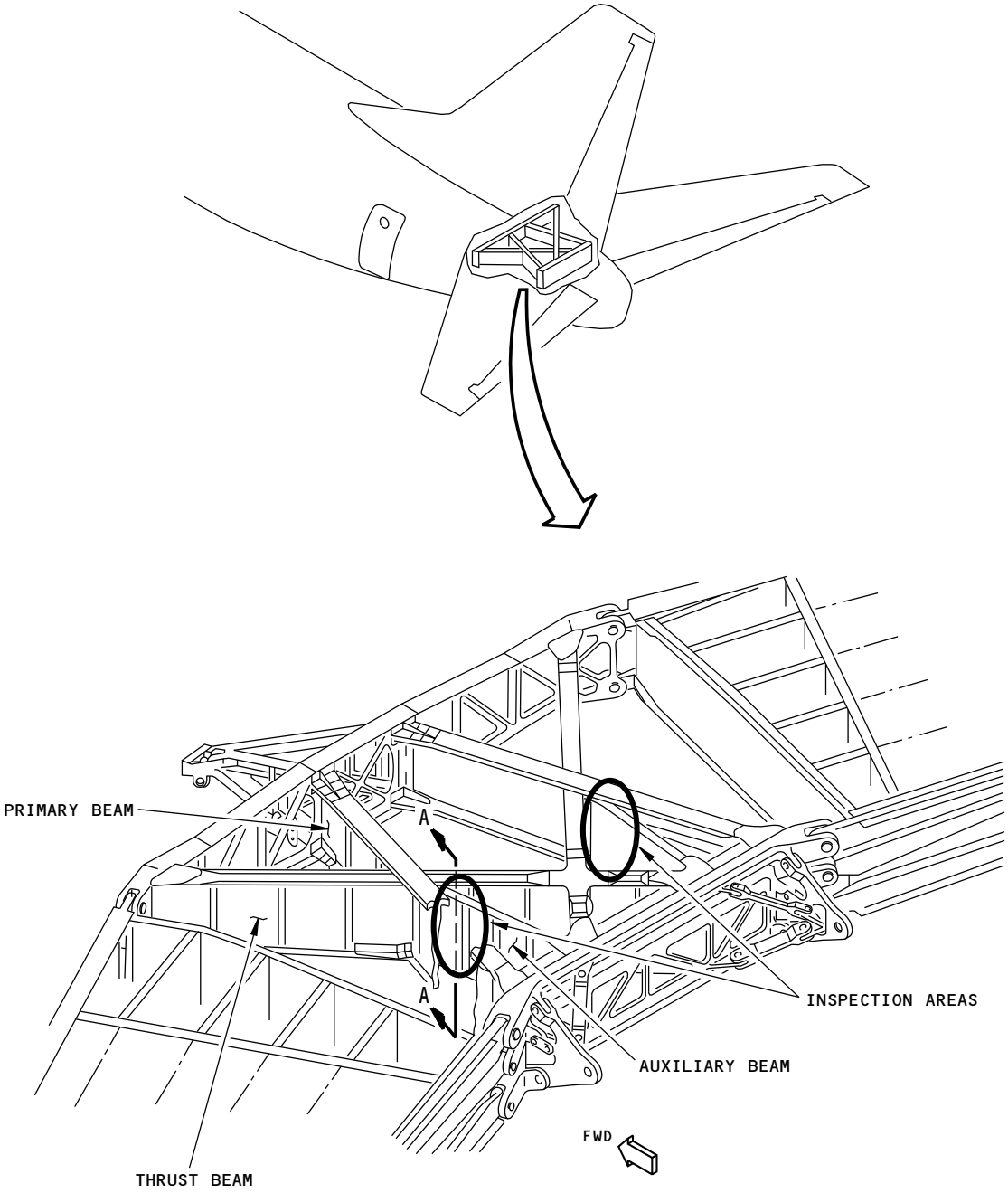

NOTES:

- DO THIS INSPECTION OF THE THRUST BEAM WEB AT THE LEFT AND RIGHT SIDE THRUST BEAMS

2162400 S0000473322_V1

Inspection Areas
Figure 1 (Sheet 1 of 2)

BOEING PROPRIETARY - Copyright © Unpublished Work - See title page for details

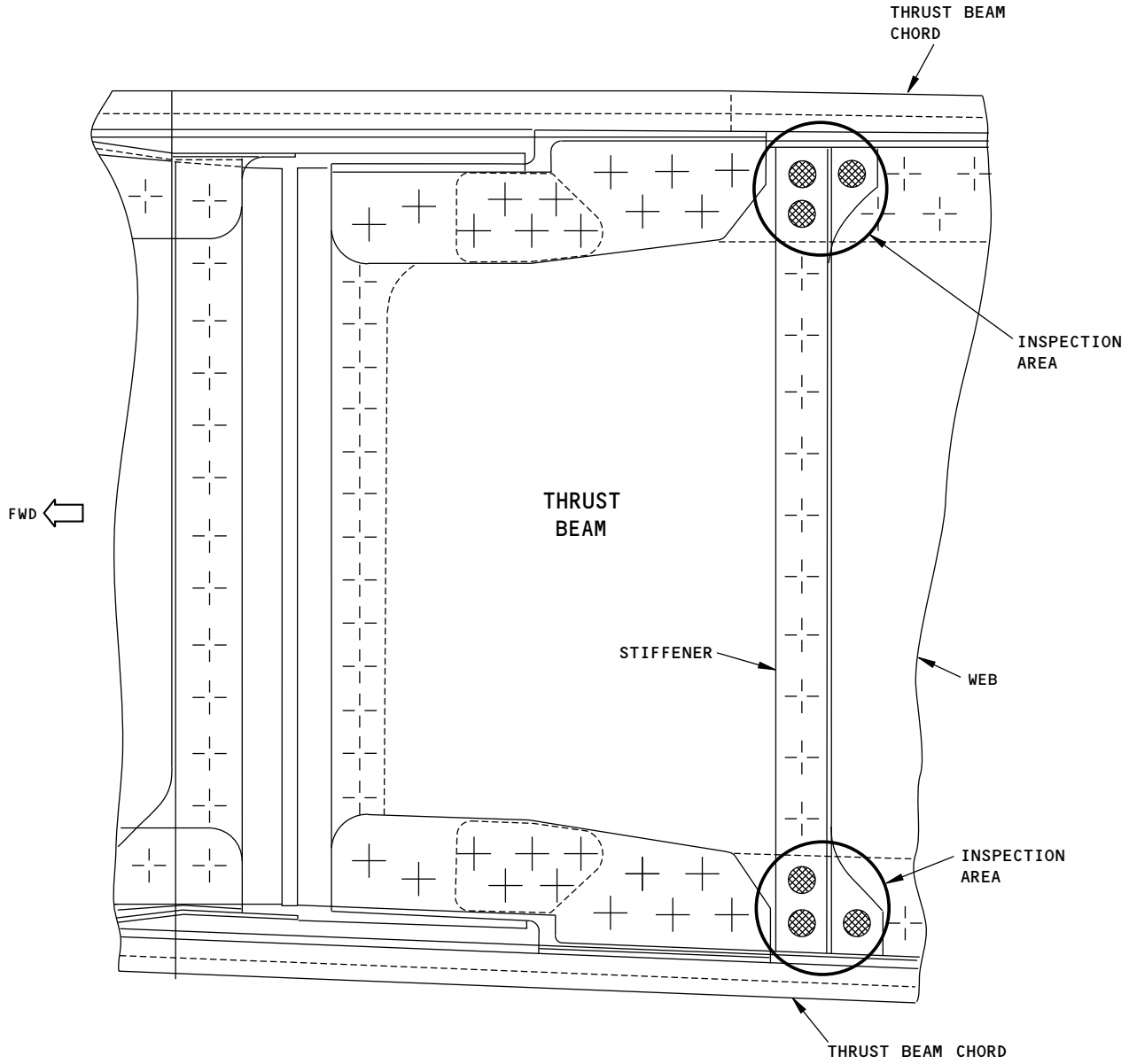

A-A

NOTES:

FASTENER LOCATIONS TO EXAMINE

- EXAMINE ALL APPLICABLE FASTENER LOCATIONS SHOWN IN SECTION VIEW A-A ABOVE (SIX FASTENERS TOTAL). ALSO EXAMINE THESE SAME FASTENER LOCATIONS ON THE OPPOSITE THRUST BEAM.
- IF A FASTENER LOCATION TO BE EXAMINED HAS THE COLLAR ON THE NEAR SIDE, THEN IT WILL BE NECESSARY TO REMOVE THE COLLAR AND EXAMINE THE FASTENER LOCATION WITH ONLY THE FASTENER INSTALLED. SEE THE NOTE IN PARAGRAPH 5.C.

2162401 S0000473323_V1

Inspection Areas
Figure 1 (Sheet 2 of 2)

BOEING PROPRIETARY - Copyright © Unpublished Work - See title page for details

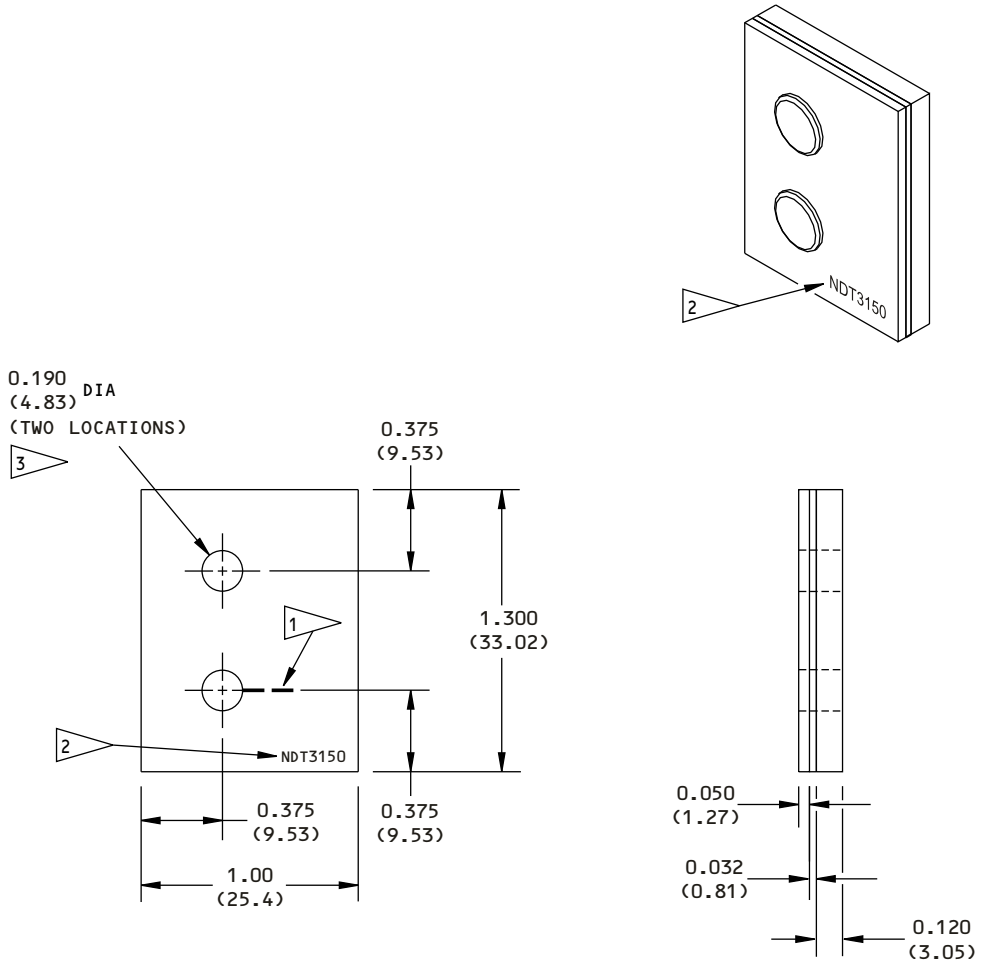

NOTES:

- ALL DIMENSIONS ARE IN INCHES (MILLIMETERS ARE IN PARENTHESES)
- SURFACE ROUGHNESS: 63 Ra OR BETTER
- MATERIAL: 7075-T6 ALUMINUM OR EQUIVALENT AIRPLANE QUALITY ALUMINUM
- TOLERANCE (UNLESS SPECIFIED DIFFERENTLY):

INCHES	MILLIMETERS	ANGULAR
X.XXX = ±0.005	X.XX = ±0.10	± 1 °
X.XX = ±0.025	X.X = ±0.5	
X.X = ±0.050	X = ±1	

1. EDM THROUGH NOTCH (MIDDLE LAYER): 0.350 (8.89) LONG X 0.007 (0.18) WIDE (±0.002 (±0.05))
2. ETCH OR STAMP THE REFERENCE STANDARD NUMBER, NDT3150, AT APPROXIMATELY THIS LOCATION.
3. INSTALL BACB30MY6C4 FASTENERS AND BACC40M6 COLLARS OR EQUIVALENT.

2162402 S0000473324_V1

Reference Standard NDT3150
Figure 2

BOEING PROPRIETARY - Copyright © Unpublished Work - See title page for details

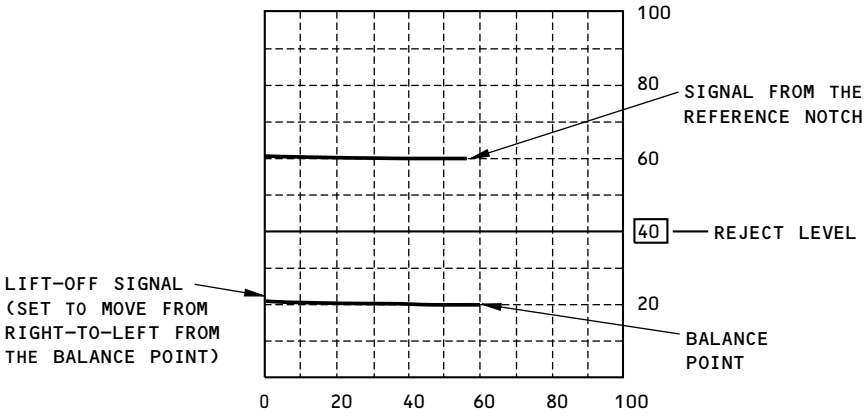

SCREEN DISPLAY OF THE INSTRUMENT CALIBRATION

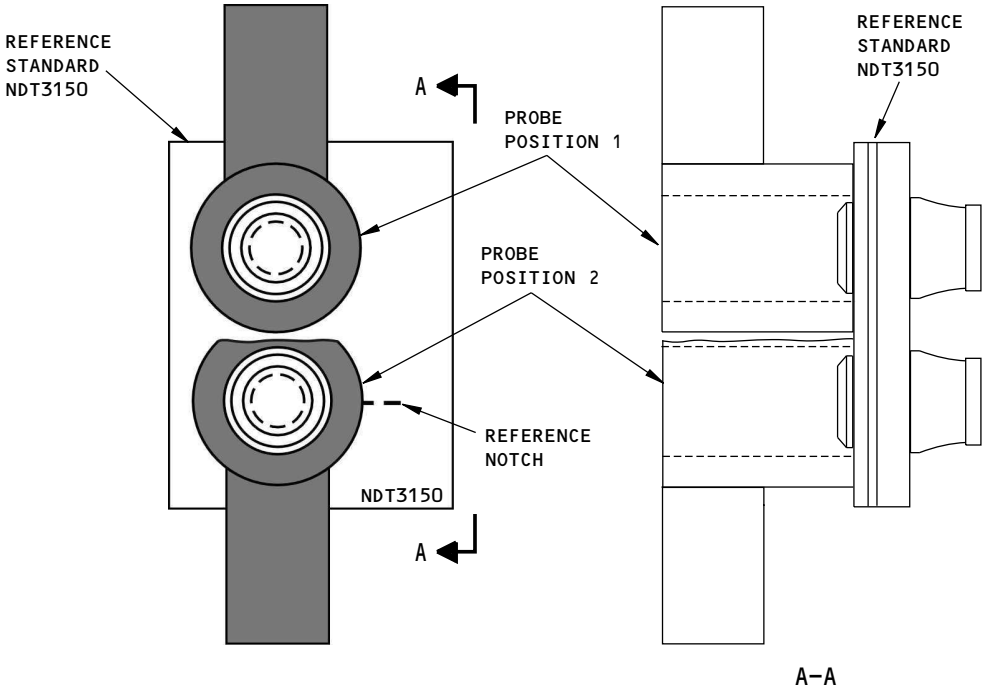

NOTES:

- THE NOTCH IN THE REFERENCE STANDARD IS IN THE SECOND LAYER MATERIAL.
- REFER TO PARAGRAPH 4 FOR INSTRUCTIONS ON HOW TO CALIBRATE THE INSTRUMENT.
- THE SCREEN DISPLAY SHOWN ABOVE CAN BE DIFFERENT BY A SMALL QUANTITY WITH DIFFERENT INSTRUMENTS AND PROBES.

2162403 S0000473325_V1

Instrument Calibration
Figure 3

BOEING PROPRIETARY - Copyright © Unpublished Work - See title page for details

PART 6 - EDDY CURRENT

UPPER CHORD INSPECTION OF THE THRUST BEAM, AUXILIARY BEAM, AND REAR SPAR OF THE HORIZONTAL STABILIZER CENTER SECTION

1. Purpose

A. Use this procedure to find cracks that start at fastener hole locations in the upper chord of the rear spar, thrust beams, and auxiliary beams. Cracks can occur at the fastener holes and get larger in the forward or aft direction. See Figure 1 for the inspection areas.

B. 737 Maintenance Planning Document (MPD) Damage Tolerance Record (DTR) Check Form Reference:

(1) Item: E-14

2. Equipment

NOTE: Refer to Part 1, 51-01-00, for data about the equipment manufacturers.

A. Instrument - Use an eddy current instrument that can:

(1) Operate in the frequency range of 400 Hz to 1 kHz.

(2) Be calibrated as specified in the calibration instructions of this procedure. The instruments that follow were used to help prepare this procedure.

(a) Nortec 500D; Olympus, Inc.

(b) Phasec 3d; Olympus, Inc.

B. Probes – Two different ring probes are necessary to do this inspection. Other ring probes of approximately the same dimensions that agree with the conditions specified in this procedure are satisfactory. The probes must have these qualities:

(1) A reflection ring probe that can operate in a frequency range of 400 Hz to 1 kHz, has a minimum inner diameter of 0.37 inch (9.4 mm) and a maximum outer diameter of 0.85 inch (21.6 mm). The probes that follow were used to help prepare this procedure.

(a) RDP.75-1K, 1 - 10 kHz, Reflection; Techna NDT

(b) RDP.85-100H-1, 100 Hz - 5 kHz, Reflection; Techna NDT

(2) A reflection ring probe that can operate in a frequency range of 500 Hz to 1 kHz, has a minimum inner diameter of 0.52 inch (13.2 mm) and a maximum outer diameter of 1.05 inch (26.7 mm). The probes that follow were used to help prepare this procedure.

(a) RR0510-6/TF, 100 Hz - 5 kHz, Reflection; NDT Engineering Corp.

(b) RDP1.0-100H-6, 100 Hz - 5 kHz, Reflection; Techna NDT

C. Reference Standard – Use reference standard NDT3148. See Figure 2 for data about the reference standard.

3. Prepare for the Inspection

A. Get access to the inspection area through stabilizer access door 311BL or an alternative.

B. Identify and clean the Detail I and Detail II inspection areas shown in Figure 1.

4. Instrument Calibration

A. Calibrate the instrument to examine the type “A” fastener hole locations identified in Figure 1.

(1) Connect the probe identified in Paragraph 2.B.(1) to the instrument.

BOEING PROPRIETARY - Copyright © Unpublished Work - See title page for details

(2) Set the instrument frequency to 750 Hz.

(3) Set the instrument filters as follows:

(a) Set the high-pass filter to off or zero Hz.

(b) If the instrument has a low-pass filter, do the steps below:

1) Set the low-pass filter to its highest value.

2) Decrease the filter value to get a stable dot or until the signal from the notch in the reference standard starts to decrease.

(c) Refer to the instrument's operation manual for band-pass and other filter instructions.

(4) If the inspection area is painted, put a shim that is not conductive on top of the reference standard. The shim thickness must be within ± 0.003 inch (0.08 mm) of the thickness of the paint.

(5) Put the probe at position 1A (P1A) on the reference standard as shown in Detail II of Figure 3.

(6) Center the probe on the fastener and balance the instrument.

(7) Adjust the balance point to 20% of full screen height (FSH) and 60% of full screen width (FSW) as shown in Detail I of Figure 3.

(8) Adjust the phase control so that the signal moves horizontally from right to left when the probe is lifted off the reference standard. See Detail I in Figure 3.

(9) Put the probe on the reference standard at the P2A location as shown in Detail II of Figure 3. Make sure the probe is centered on the fastener.

(10) Adjust the gain as necessary to set the signal to 60% of FSH (40% above the balance point) as shown by flagnote 2 in Detail I of Figure 3.

B. Calibrate the instrument to examine the type "B" fastener hole locations identified in Figure 1.

(1) Use the instructions given in Paragraph 4.A.(1) thru Paragraph 4.A.(10) but:

(a) In Paragraph 4.A.(2), set the instrument frequency to 600 Hz.

(b) In Paragraph 4.A.(5), use probe position P1B.

(c) In Paragraph 4.A.(9), use probe position P2B.

C. Calibrate the instrument to examine the type "C" fastener hole locations identified in Figure 1.

(1) Use the instructions given in Paragraph 4.A.(1) thru Paragraph 4.A.(10) but:

(a) In Paragraph 4.A.(1), connect the probe identified in Paragraph 2.B.(2) to the instrument.

(b) In Paragraph 4.A.(2), set the instrument frequency to 400 Hz.

(c) In Paragraph 4.A.(5), use probe position P1C.

(d) In Paragraph 4.A.(9), use probe position P2C.

D. Calibrate the instrument to examine the type "D" fastener hole locations identified in Figure 1.

(1) Use the instructions given in Paragraph 4.A.(1) thru Paragraph 4.A.(10) but:

(a) In Paragraph 4.A.(1), connect the probe identified in Paragraph 2.B.(2) to the instrument.

(b) In Paragraph 4.A.(2), set the instrument frequency to 450 Hz.

(c) In Paragraph 4.A.(5), use probe position P1D.

(d) In Paragraph 4.A.(9), use probe position P2D.

E. Calibrate the instrument to examine the type "E" fastener hole locations identified in Figure 1.

(1) Use the instructions given in Paragraph 4.A.(1) thru Paragraph 4.A.(10) but:

BOEING PROPRIETARY - Copyright © Unpublished Work - See title page for details

(a) In Paragraph 4.A.(1), connect the probe identified in Paragraph 2.B.(2) to the instrument.

(b) In Paragraph 4.A.(2), set the instrument frequency to 450 Hz.

(c) In Paragraph 4.A.(5), use probe position P1E.

(d) In Paragraph 4.A.(9), use probe position P2E.

5. Inspection Procedure

A. Examine the type “A” fastener hole locations. Refer to Details I and II in Figure 1. A total of four type “A” fastener hole locations are examined with this procedure.

(1) Calibrate the instrument as specified in Paragraph 4.A.

(2) Center the probe on a type “A” fastener and balance the instrument.

(3) Move the probe to a different type “A” fastener and monitor the instrument display. If there are no cracks at this fastener hole location, the signal from this fastener hole location will be at or near the balance point. Do the steps that follow as necessary.

(a) It is possible that the fastener hole you used to get the baseline signal was cracked. If this occurred, all fastener holes that are not cracked will have a screen signal below the balance point. Put the probe on a different inspection fastener hole if you think you balanced on a cracked fastener hole.

(b) The signal from a large crack can be more than 100% of full screen height and difficult to see on the instrument display. If necessary, the gain can be decreased to see where the signal comes into view. Be sure to set the gain back to the calibration level before you examine more fastener locations.

(4) Do Paragraph 5.A.(3) to examine the other type “A” fasteners.

(5) Make a record of the fastener hole locations that cause signals to occur that are 40% (or more) of FSH (20% above the balance point).

B. Examine the type “B” fastener hole locations. Refer to Details I and II in Figure 1. A total of four type “B” fastener hole locations are examined with this procedure.

(1) Calibrate the instrument as specified in Paragraph 4.B.

(2) Center the probe on a type “B” fastener and balance the instrument.

(3) Move the probe to a different type “B” fastener and monitor the instrument display. If there are no cracks at this fastener hole location, the signal from this fastener hole location will be at or near the balance point. Do Paragraph 5.A.(3)(a) and Paragraph 5.A.(3)(b) as necessary.

(4) Do Paragraph 5.B.(3) to examine the other type “B” fasteners.

(5) Make a record of the fastener hole locations that cause signals to occur that are 40% (or more) of FSH (20% above the balance point).

C. Examine the type “C” fastener hole locations. Refer to Details I and II in Figure 1. A total of eight type “C” fastener hole locations are examined with this procedure.

(1) Calibrate the instrument as specified in Paragraph 4.C.

(2) Center the probe on a type “C” fastener and balance the instrument.

(3) Move the probe to a different type “C” fastener and monitor the instrument display. If there are no cracks at this fastener hole location, the signal from this fastener hole location will be at or near the balance point. Do Paragraph 5.A.(3)(a) and Paragraph 5.A.(3)(b) as necessary.

(4) Do Paragraph 5.C.(3) to examine the other type “C” fasteners.

BOEING PROPRIETARY - Copyright © Unpublished Work - See title page for details

(5) Make a record of the fastener hole locations that cause signals to occur that are 40% (or more) of FSH (20% above the balance point).

D. Examine the type “D” fastener hole locations. Refer to Details I and II in Figure 1. A total of eight type “D” fastener hole locations are examined with this procedure.

(1) Calibrate the instrument as specified in Paragraph 4.D.

(2) Center the probe on a type “D” fastener and balance the instrument.

(3) Move the probe to a different type “D” fastener and monitor the instrument display. If there are no cracks at this fastener hole location, the signal from this fastener hole location will be at or near the balance point. Do Paragraph 5.A.(3)(a) and Paragraph 5.A.(3)(b) as necessary.

(4) Do Paragraph 5.D.(3) to examine the other type “D” fasteners.

(5) Make a record of the fastener hole locations that cause signals to occur that are 40% (or more) of FSH (20% above the balance point).

E. Examine the type “E” fastener hole locations. Refer to Details I and II in Figure 1. A total of eight type “E” fastener hole locations are examined with this procedure.

(1) Calibrate the instrument as specified in Paragraph 4.E.

(2) Center the probe on a type “E” fastener and balance the instrument.

(3) Move the probe to a different type “E” fastener and monitor the instrument display. If there are no cracks at this fastener hole location, the signal from this fastener hole location will be at or near the balance point. Do Paragraph 5.A.(3)(a) and Paragraph 5.A.(3)(b) as necessary.

(4) Do Paragraph 5.E.(3) to examine the other type “E” fasteners.

(5) Make a record of the fastener hole locations that cause signals to occur that are 40% (or more) of FSH (20% above the balance point).

6. Inspection Results

A. A signal that is 40% or more of FSH (20% above the balance point) is a sign of a crack and must be examined more fully.

B. Compare the signal that occurs during the inspection to the signal you got from the notch in the reference standard during calibration.

NOTE: It is possible that the fastener hole you used to get the baseline signal was cracked. If this occurs, all fastener holes that are not cracked will have a screen signal below the balance point. Put the probe on a different inspection fastener hole if you think you balanced on a cracked fastener hole.

C. Other conditions that can cause crack type signals are:

(1) A change in the space between fasteners. See if the same location on the opposite joint has the same distance between fasteners and, if so, compare the results from the two locations.

(2) Fasteners that have different dimensions or are made of different materials. Examine the fastener to see if it is different and compare the signal to a location with an equivalent, or almost equivalent, fastener type.

D. If crack signals occur, do an open hole eddy current inspection as specified in Part 6, 51-00-00, Procedure 11 or Part 6, 51-00-00, Procedure 16.

BOEING PROPRIETARY - Copyright © Unpublished Work - See title page for details

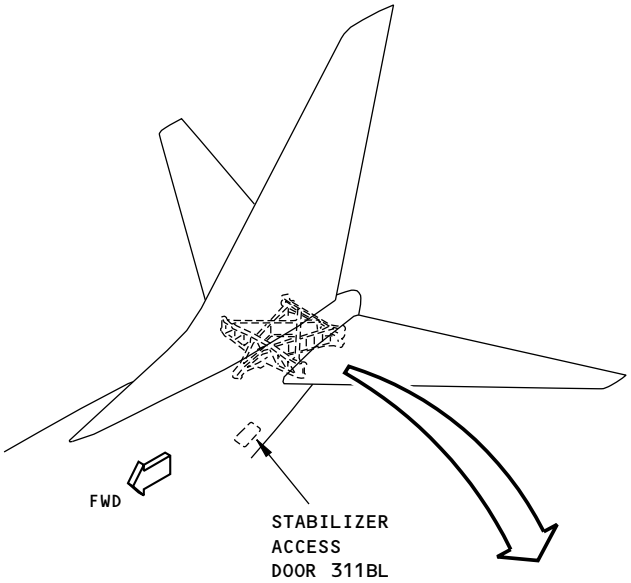

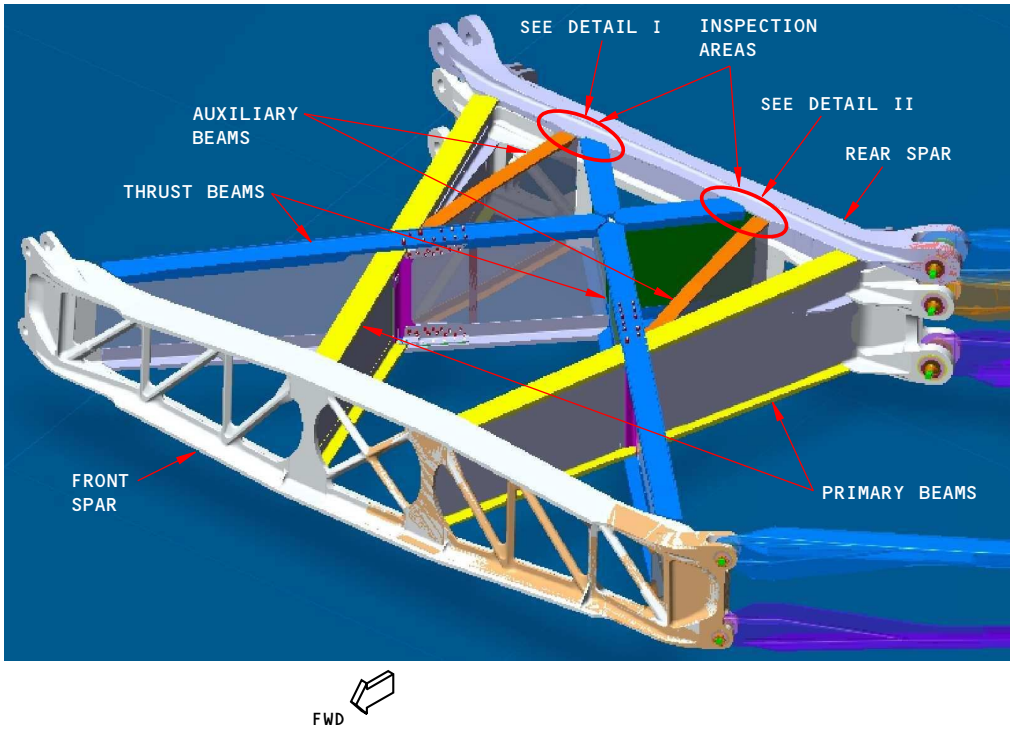

NOTES:

- THE GUSSETS ARE NOT SHOWN IN THIS VIEW.

2162406 S0000473327_V1

Inspection Areas
Figure 1 (Sheet 1 of 2)

BOEING PROPRIETARY - Copyright © Unpublished Work - See title page for details

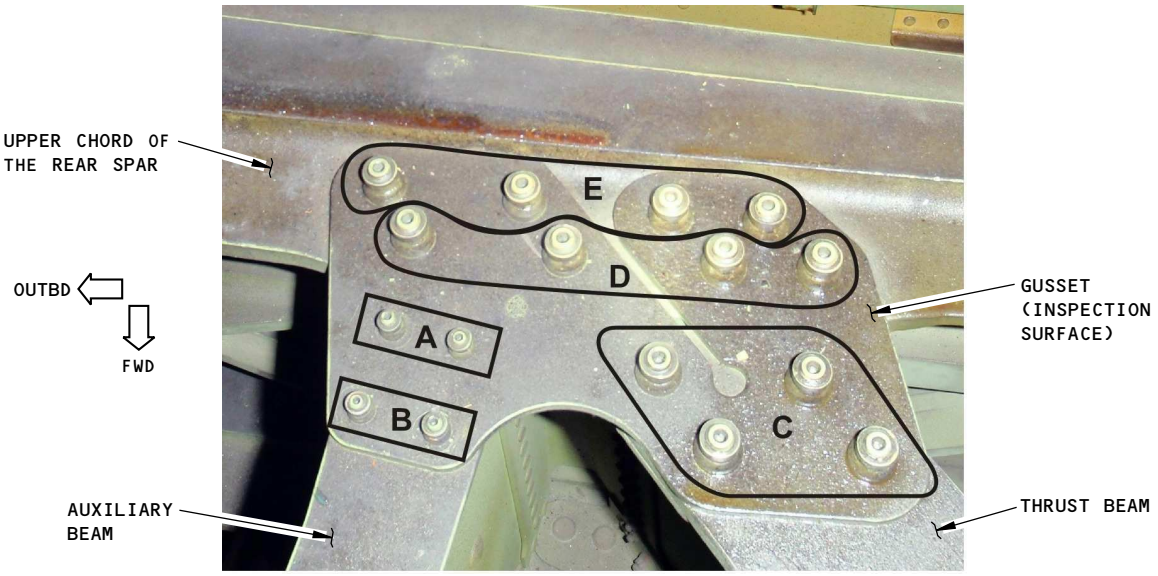

DETAIL I

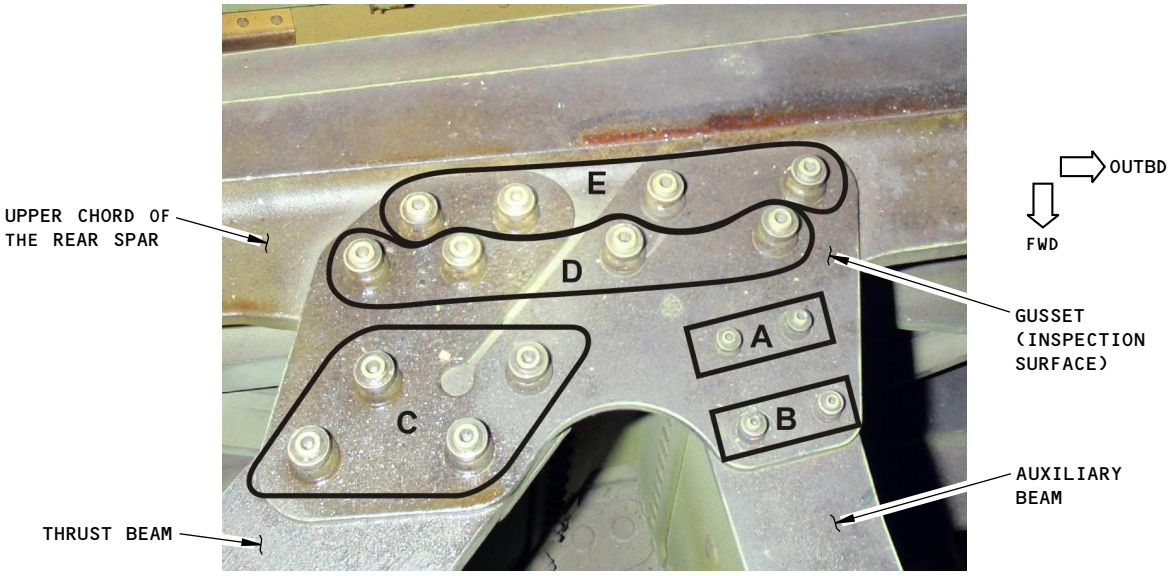

DETAIL II

NOTES:

- DO THIS INSPECTION FROM ABOVE THE REAR SPAR, THROUGH THE GUSSETS.
- THE FASTENER HOLE LOCATIONS TO EXAMINE ARE IDENTIFIED BY LETTER CODES "A" THRU "E". BE SURE TO CALIBRATE THE INSTRUMENT ON THE CORRECT FASTENERS IN THE REFERENCE STANDARD BEFORE EACH DIFFERENT FASTENER CODE IS EXAMINED.

2162409 S0000473328_V1

Inspection Areas
Figure 1 (Sheet 2 of 2)

BOEING PROPRIETARY - Copyright © Unpublished Work - See title page for details

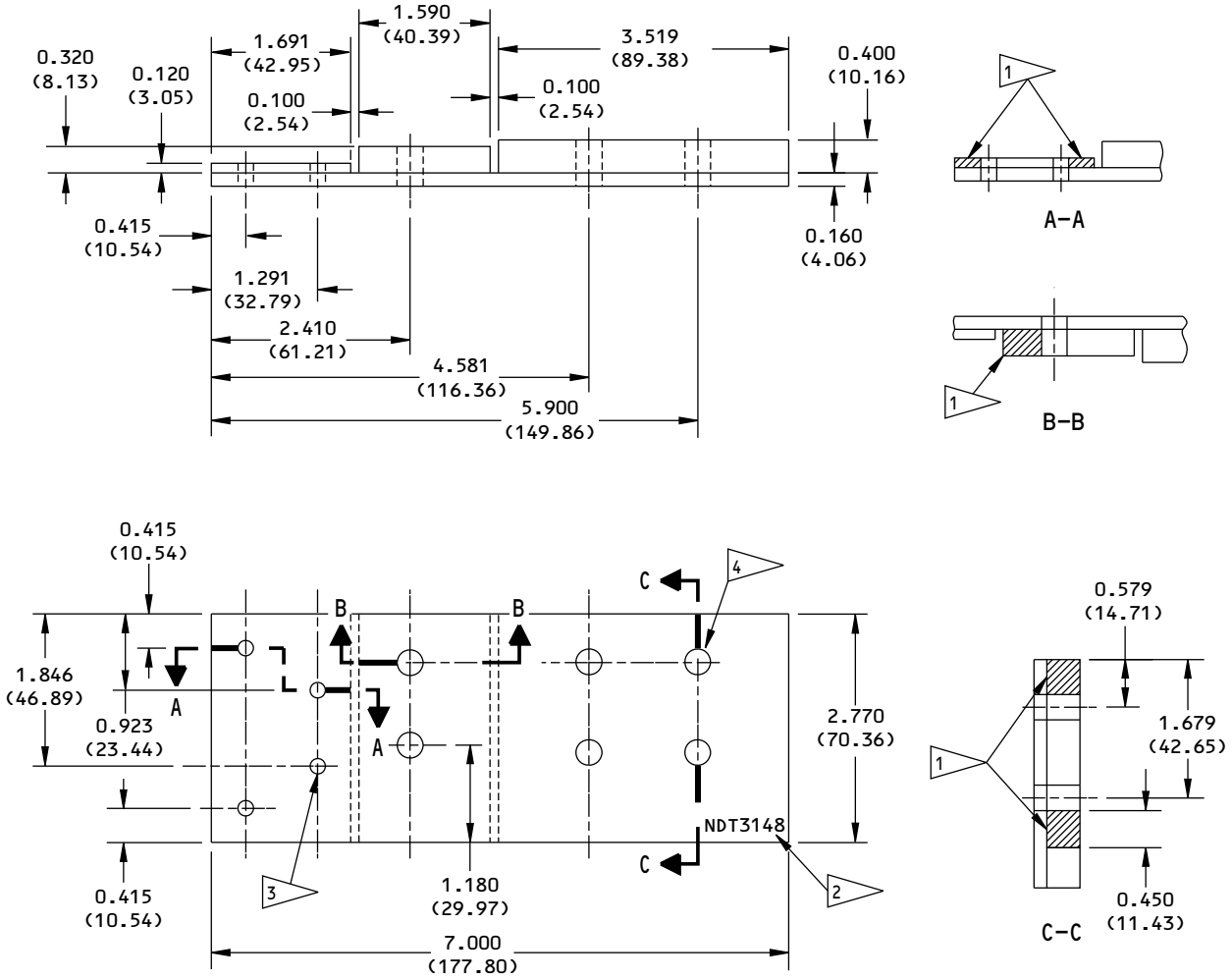

NOTES:

- ALL DIMENSIONS ARE IN INCHES (MILLIMETERS ARE IN PARENTHESES)
- TOLERANCE (UNLESS SPECIFIED DIFFERENTLY):

INCHES	MILLIMETERS	ANGULAR
X.XXX = ±0.005	X.XX = ±0.10	±1°
X.XX = ±0.025	X.X = ±0.5	
X.X = ±0.050	X = ±1	

- SURFACE ROUGHNESS: 63 Ra OR BETTER
- MATERIAL: 7075-T6, 2024-T3 OR -T4 ALUMINUM

1. EDM THROUGH NOTCHES: LENGTH AS SHOWN X 0.007 (0.18) WIDE (±0.002 (±0.05))
2. ETCH OR STAMP THE REFERENCE STANDARD NUMBER, NDT3148, AT APPROXIMATELY THIS LOCATION.
3. INSTALL BACB30NX6 FASTENERS AND BACC30X6 COLLARS, OR EQUIVALENT, AFTER THE EDM NOTCHES HAVE BEEN MADE. TYPICAL 4 LOCATIONS.
4. INSTALL BACB30NX10 FASTENERS AND BACC30X10 COLLARS, OR EQUIVALENT, AFTER THE EDM NOTCH OR NOTCHES HAVE BEEN MADE. TYPICAL 6 LOCATIONS.

2162411 S0000473329_V1

Reference Standard NDT3148
Figure 2

BOEING PROPRIETARY - Copyright © Unpublished Work - See title page for details

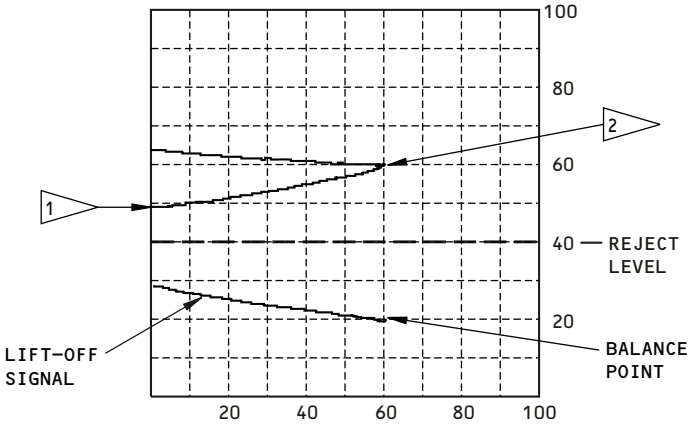

CALIBRATION SCREEN DISPLAY

(THE DISPLAY CAN LOOK DIFFERENT WITH DIFFERENT INSTRUMENTS, PROBES, AND QUANTITIES OF V/H GAIN USED)

DETAIL I

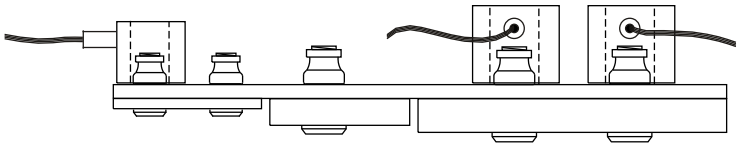

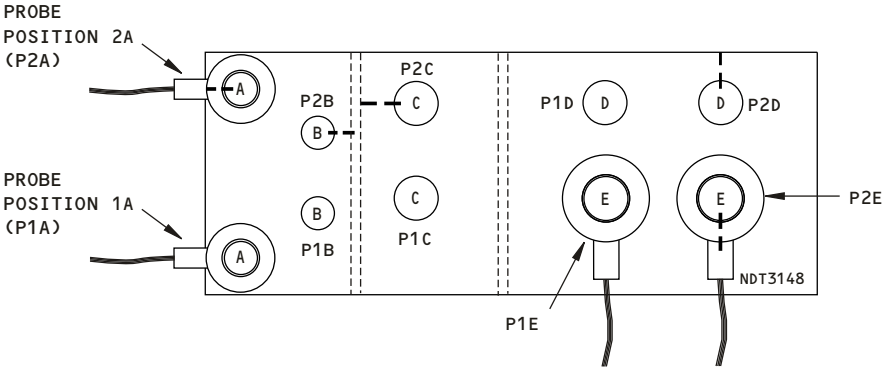

DETAIL II

NOTES:

1. THIS SIGNAL OCCURS AS THE PROBE IS PUT ON THE REFERENCE STANDARD.
2. REFERENCE NOTCH SIGNAL SET AT 60% OF FSH (40% ABOVE THE BALANCE POINT).

2162413 S0000473330_V1

Instrument Calibration
Figure 3

BOEING PROPRIETARY - Copyright © Unpublished Work - See title page for details

PART 6 - EDDY CURRENT

UPPER CHORD AT THE FRONT SPAR OF THE HORIZONTAL STABILIZER - SIDE-OF-BODY TO STAB STA 66.5 (HFEC)

1. Purpose

A. Use this high frequency eddy current (HFEC) procedure to examine the upper chord at the front spar of the horizontal stabilizer for cracks. The inspection area is along the forward and aft edges of the upper surface of the upper chord, between the horizontal stabilizer side-of-body and stabilizer station 66.5. See Figure 1 for the inspection areas.

B. This procedure uses an impedance plane display instrument.

C. The upper chord is aluminum.

D. 737 Maintenance Planning Data (MPD) Damage Tolerance Rating (DTR) Check Form Reference:

(1) Item: 55-10-06-1

2. Equipment

A. General

(1) Use inspection equipment that can be calibrated on the reference standard as specified in Part 6, 51-00-00, Procedure 23, paragraph 5.

(2) Refer to Part 1, 51-01-00, for data about the equipment manufacturers.

B. Instrument

(1) Use an eddy current instrument that:

(a) Has an impedance plane display.

(b) Operates from 50 to 500 kHz.

(2) The instrument that follows was used to help prepare this procedure.

(a) Phasec 2D/3D; GE Inspection Technologies

C. Probes

(1) Use a 0.125 inch (3.18 mm) diameter pencil probe that operates from 50 to 500 kHz.

(2) The probe that follows was used to help prepare this procedure.

(a) TPEN92-5B; Techna NDT

D. Reference Standards

(1) Use reference standard 126, or an equivalent, as shown in Part 6, 51-00-00, Procedure 23, to help calibrate the instrument.

3. Prepare for the Inspection

A. Identify and get access to all of the inspection areas shown in Figure 1.

B. Clean the inspection surfaces.

(1) Remove dirt or grease from the inspection surfaces.

(2) Remove paint only if it is loose.

BOEING PROPRIETARY - Copyright © Unpublished Work - See title page for details

4. **Instrument Calibration**

A. Calibrate the instrument to examine the edge of the upper surface of the upper chord between the horizontal stabilizer side-of-body and stabilizer station 66.5 as specified in Part 6, 51-00-00, Procedure 23, paragraph 5.

(1) Use reference standard 126, or an equivalent, as shown in Part 6, 51-00-00, Procedure 23, to help calibrate the instrument.

5. **Inspection Procedure**

A. Examine the forward and aft edges of the upper surface of the upper chord between the horizontal stabilizer side-of-body and stabilizer station 66.5 for cracks as specified in Part 6, 51-00-00, Procedure 23, paragraph 6. Examine the areas that follow:

(1) Examine the upper surface of the upper chord between the horizontal stabilizer side-of-body and stabilizer station 66.5.

(2) It is necessary to do the scan along the forward and aft edges of the upper chord. See View A-A in Figure 1. It is necessary to keep the probe coil at a constant distance from the edge during the scan. Keep the edge of the probe tip adjacent to the edge of the upper chord during each scan.

6. **Inspection Results**

A. Refer to Part 6, 51-00-00, Procedure 23, paragraph 7, for instructions to help make an analysis of the indications that occur during the inspection.

BOEING PROPRIETARY - Copyright © Unpublished Work - See title page for details

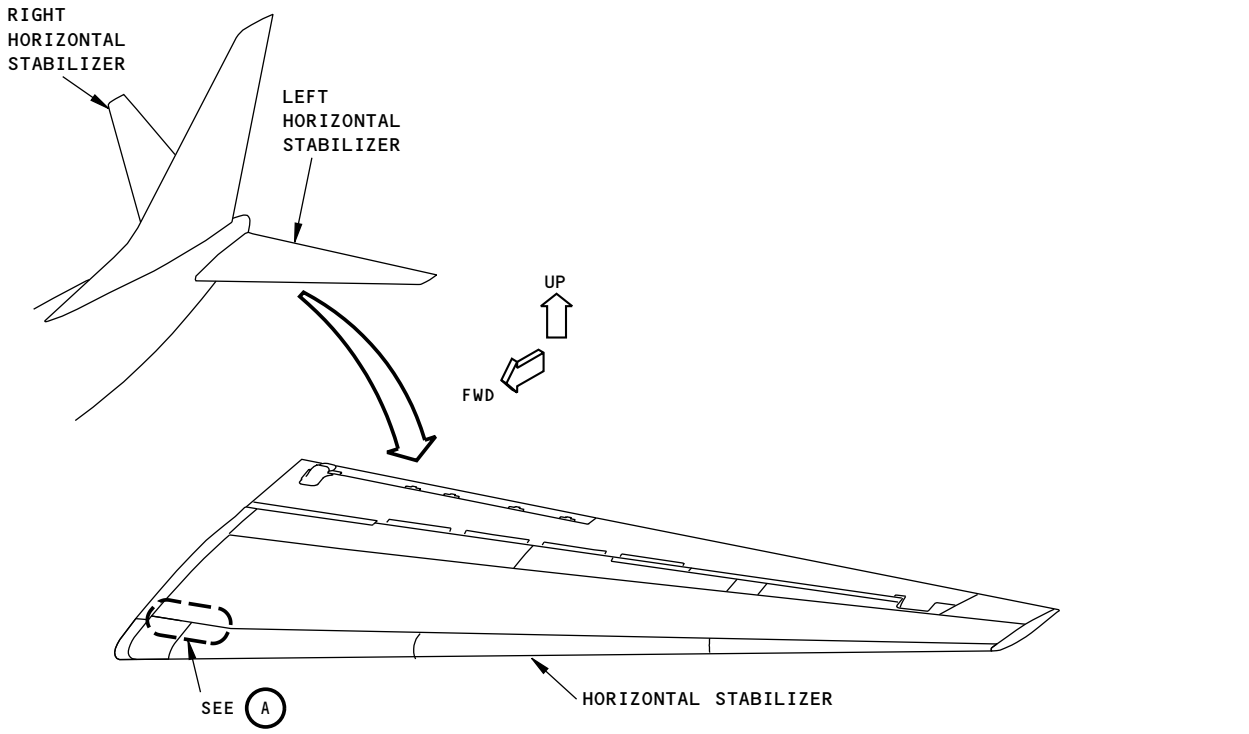

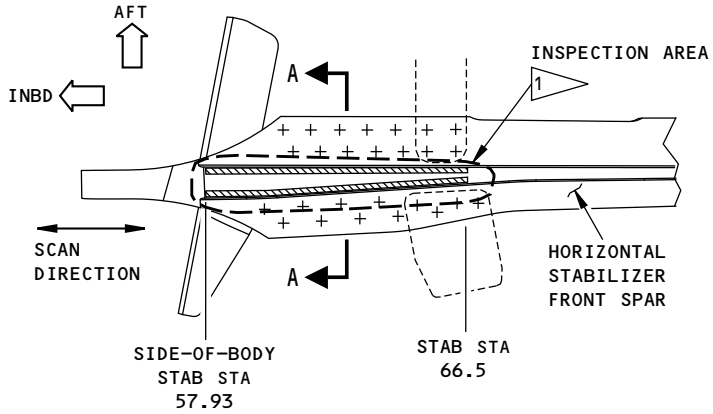

UPPER CHORD OF THE HORIZONTAL STABILIZER
(VIEW IS LOOKING DOWN)

A

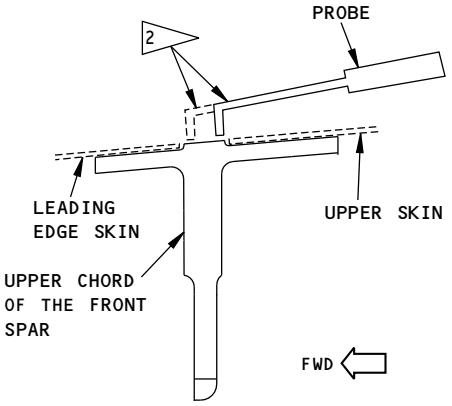

A-A

NOTES

INSPECTION AREA

1 THE INSPECTION AREA IS THE UPPER SURFACE OF THE UPPER CHORD AT THE FRONT SPAR OF THE HORIZONTAL STABILIZER, BETWEEN THE SIDE-OF-BODY AND STABILIZER STATION 66.5.

2 IT IS NECESSARY TO DO THE SCAN AT THE FORWARD AND AFT EDGES OF THE UPPER CHORD AS SHOWN IN VIEW A-A. IT IS NECESSARY TO KEEP THE PROBE COIL AT A CONSTANT DISTANCE FROM THE EDGE DURING THE SCAN. KEEP THE EDGE OF THE PROBE TIP ADJACENT TO THE EDGE OF THE UPPER CHORD DURING EACH SCAN.

2184590 S0000484029_V2

Inspection Areas
Figure 1

BOEING PROPRIETARY - Copyright © Unpublished Work - See title page for details

PART 6 - EDDY CURRENT

HORIZONTAL STABILIZER - UPPER CHORD OF THE FRONT SPAR - WEB FLANGE - STAB STA 66.5 TO THE STAB TIP (LFEC)

1. Purpose

A. Use this low frequency eddy current (LFEC) procedure to examine the front spar of the horizontal stabilizer for cracks in the upper chord. The inspection is at the fastener locations that go through the front spar web and the upper chord flange from stabilizer station 66.5 to the stabilizer tip. See Figure 1 for the inspection areas.

B. This procedure uses an impedance plane display instrument.

C. The upper chord is aluminum.

D. 737 Maintenance Planning Document (MPD) Damage Tolerance Record (DTR) Check Form Reference:

(1) Item: 55-10-06-4A

2. Equipment

A. General

(1) Use inspection equipment that can be calibrated on the reference standard as specified in Paragraph 4.

(2) Refer to Part 1, 51-01-00, for data about the equipment manufacturers.

B. Instrument

(1) Use an eddy current instrument that:

(a) Has an impedance plane display.

(b) Operates from 400 Hz to 2.2 kHz.

(2) The instrument that follows was used to help prepare this procedure.

(a) Phasec 2D/3D; GE Inspection Technologies

C. Probes

NOTE: Two different ring probes are necessary to do this inspection. It is necessary to change the ring probe diameters because of changes in the fastener diameters and the edge margins in the inspection area. See Table I in Figure 3 to identify the ring probe to use.

(1) Use reflection type ring probes that:

(a) Operate from 400 Hz to 2.2 kHz.

(b) Have the diameters that follow (identified as Probe 1):

1) Has a minimum inner diameter of 0.50 inch (12.7 mm).

2) Has a maximum outer diameter of 1.10 inch (27.9 mm).

(c) Have the diameters that follow (identified as Probe 2):

1) Has a minimum inner diameter of 0.32 inch (8.1 mm).

2) Has a maximum outer diameter of 0.75 inch (19.1 mm).

BOEING PROPRIETARY - Copyright © Unpublished Work - See title page for details

(2) The ring probes that follow were used to help prepare this procedure.

NOTE: Other probes can be used if they can be calibrated with the reference standard specified in Paragraph 2.D.

NOTE: Shielded probes are recommended.

(a) Probe 1:

1) RDP.9-100H-2; Techna NDT

2) NEC-4028-3; NDT Engineering Inc.

(b) Probe 2:

1) RR207-2/TF; NDT Engineering Inc.

2) RDP.75-1K; Techna NDT

D. Reference Standards

(1) Use reference standards NDT3190-X as shown in Figure 2 to help calibrate the instrument.

3. Prepare for the Inspection

A. Identify and get access to all of the inspection areas shown in Figure 1.

(1) It is necessary to remove the leading edge of the horizontal stabilizer to do this inspection.

B. Clean the inspection surfaces.

(1) Remove dirt or grease from the inspection surfaces.

(2) Remove paint only if it is loose.

4. Instrument Calibration

A. Identify the reference standard to use during calibration from Table I in Figure 3 for the inspection area on the airplane to be examined. The inspection areas are identified in Figure 1.

B. Set the instrument frequency so that it is in the frequency range specified in Table I in Figure 3 for the reference standard to be used.

C. Put the ring probe on the reference standard at probe position 1 as shown in Detail II of Figure 3. Adjust the center of the probe so that it is above the center of the fastener hole.

D. Balance the instrument.

E. Move the center of the probe above the fastener hole as necessary until the height of the signal is at its minimum.

F. Set the balance point at approximately 20% of full screen height (FSH) and 60% of full screen width (FSW) as shown in Detail I of Figure 3

G. Set the lift-off (phase) so that the signal moves horizontally from right to left when the probe is lifted off the reference standard as shown in Detail I of Figure 3.

H. Put the ring probe at probe position 2 as shown in Detail II of Figure 3. Make sure the center of the probe is above the center of the fastener hole.

I. Move the center of the probe above the fastener hole as necessary until the height of the notch signal is at its minimum.

J. Adjust the instrument gain to get a notch signal that is approximately 60% of FSH as shown in Detail I of Figure 3.

K. Make sure the instrument is calibrated correctly:

BOEING PROPRIETARY - Copyright © Unpublished Work - See title page for details

(1) Put the probe on the reference standard at probe position 1 as shown in Detail II of Figure 3.

(2) Move the probe above the fastener hole as necessary until the height of the notch signal is at its minimum.

(3) Balance the instrument.

(4) Put the probe on the reference standard at probe position 2 as shown in Detail II of Figure 3.

(5) Move the probe above the fastener hole as necessary until the height of the signal is at its minimum.

L. If the minimum signal from the notch is not 60% of FSH then do the calibration again.

5. Inspection Procedure

A. Calibrate the instrument as specified in Paragraph 4. for the inspection area to be examined. Figure 1 identifies the inspection areas and Table I in Figure 3 identifies the reference standard to use during calibration to examine the different fastener locations.

NOTE: Make sure to calibrate the instrument each time you examine fastener locations in a different inspection area.

B. Move the center of the probe above the center of the first fastener to be examined for which the instrument has been calibrated to examine.

C. Move the probe above the fastener to get the minimum signal from the instrument.

D. Balance the instrument.

E. Put the ring probe above each fastener in the same inspection area that the instrument has been calibrated to examine and monitor the instrument for crack signals. See Figure 1 for the inspection area. During the inspection:

(1) Make a mark at all fastener locations where signals occur that are 40 percent (or more) of FSH.

(2) Do a calibration check as follows if the equipment is changed or when the inspection is completed.

NOTE: Do not adjust the instrument gain.

(a) Put the probe on the reference standard at probe position 1 as shown in Detail II of Figure 3.

(b) Move the center of the probe above the fastener hole as necessary until the height of the signal is at its minimum.

(c) Balance the instrument.

(d) Put the probe on the reference standard at probe position 2 and make sure that the fastener is in the center of the probe. Compare the signal you got from the notch during calibration with the signal that you get now.

(e) If the signal you get from the notch has decreased in FSH by 10 percent or more, do the calibration and the inspection again on the fastener locations you have examined since the last calibration check.

F. Do Paragraph 5.A. thru Paragraph 5.E. again for each inspection area to be examined.

G. Do Paragraph 5.A. thru Paragraph 5.F. again to examine the front spar for cracks on the other side of the airplane.

6. Inspection Results

A. A signal that is more than 40 percent of FSH is a sign of a crack. The location must be rejected and more analysis is necessary.

BOEING PROPRIETARY - Copyright © Unpublished Work - See title page for details

B. Compare the signal that occurs during the inspection to the signal you got from the notch in the reference standard during calibration.

C. If crack indications are found, do an open hole eddy current inspection as specified in Part 6, 51-00-00, Procedure 16.

BOEING PROPRIETARY - Copyright © Unpublished Work - See title page for details

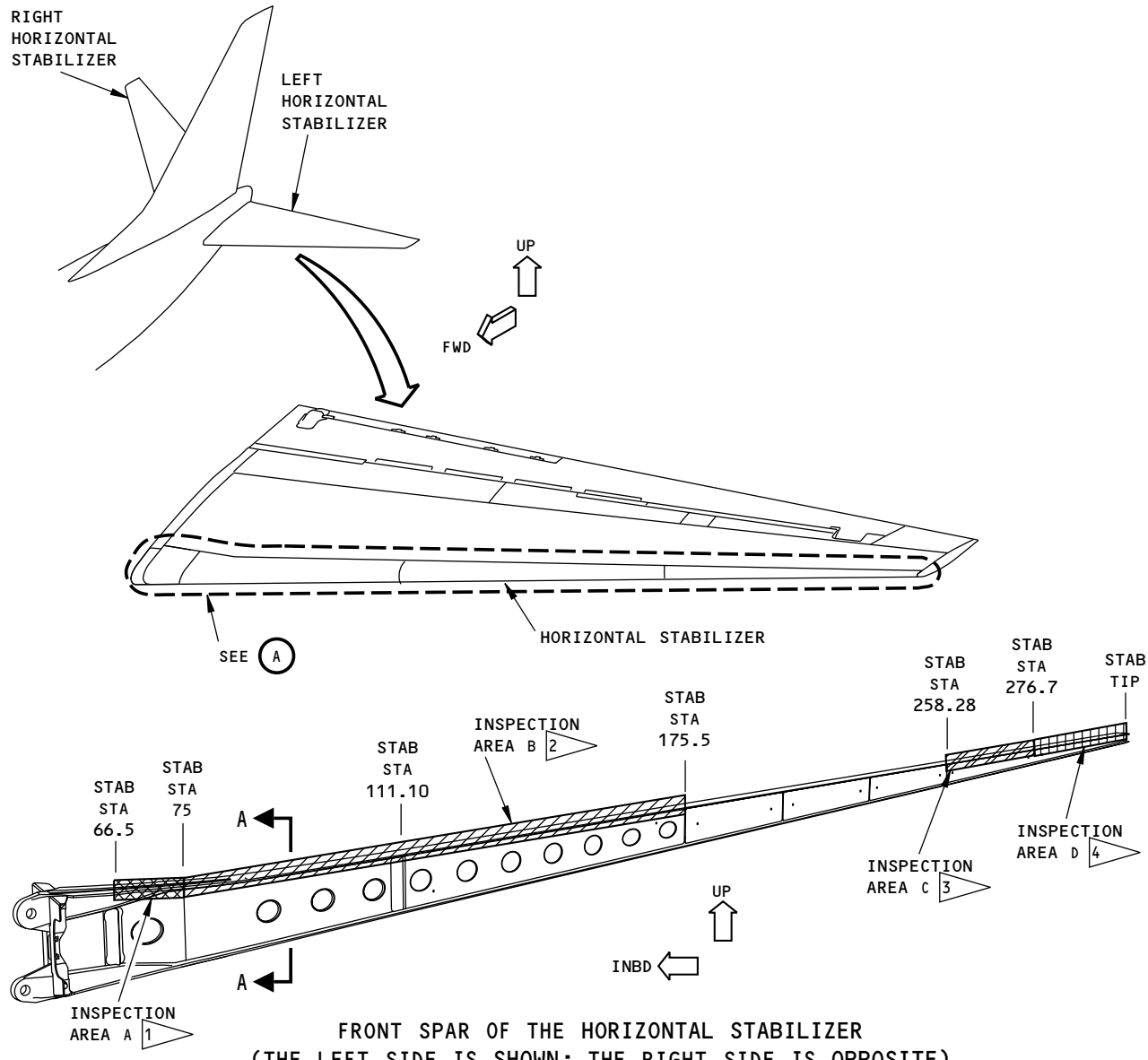

NOTES

- INSPECTION AREA A
- INSPECTION AREA B
- INSPECTION AREA C
- INSPECTION AREA D

1. INSPECTION AREA A IS BETWEEN STABILIZER STATION 66.5 AND 75
2. INSPECTION AREA B IS BETWEEN STABILIZER STATION 75 AND 175.5
3. INSPECTION AREA C IS BETWEEN STABILIZER STATION 258.28 AND 276.7
4. INSPECTION AREA D IS BETWEEN STABILIZER STATION 276.7 AND THE STABILIZER TIP

2185768 S0000484398_V1

Inspection Areas
Figure 1 (Sheet 1 of 2)

BOEING PROPRIETARY - Copyright © Unpublished Work - See title page for details

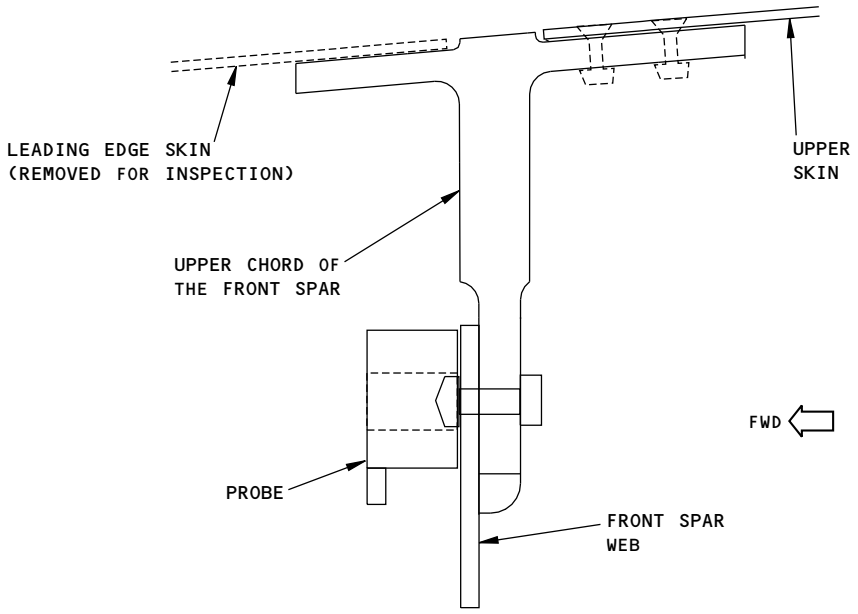

THIS VIEW IS IN INSPECTION AREA B;
OTHER AREAS ARE ALMOST THE SAME

A-A

2185773 S0000484399_V1

Inspection Areas
Figure 1 (Sheet 2 of 2)

BOEING PROPRIETARY - Copyright © Unpublished Work - See title page for details

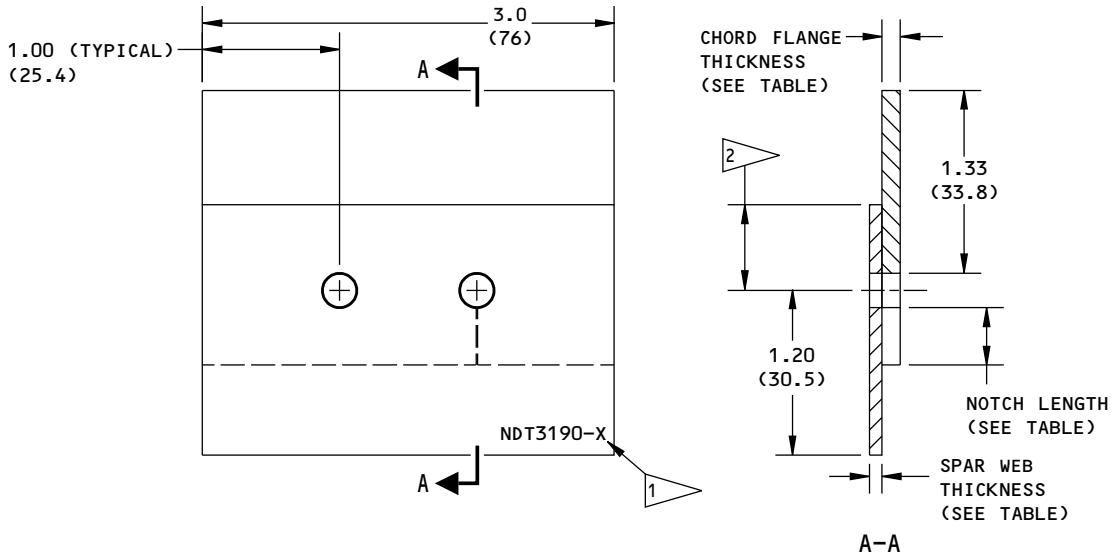

TABLE: NDT3190-X ASSEMBLY					
REFERENCE STANDARD	CHORD FLANGE THICKNESS	SPAR WEB THICKNESS	NOMINAL FASTENER DIAMETER	FASTENER	NOTCH LENGTH
NDT3190-A	0.350 (8.89)	0.120 (3.05)	0.3125 (7.938)	BACB30VT10*8*	0.520 (13.21)
NDT3190-B	0.133 (3.38)	0.190 (2.29)	0.2500 (6.350)	BACB30VT8*4*	0.418 (10.62)
NDT3190-C	0.080 (2.03)	0.032 (0.81)	0.1875 (4.763)	BACR15FT6*4*	0.340 (8.64)
NDT3190-D	0.080 (2.03)	0.032 (0.81)	0.1563 (3.969)	BACR15FT5*4*	0.285 (7.24)

NOTES:

- ALL DIMENSIONS ARE IN INCHES (MILLIMETERS ARE IN PARENTHESES)
- TOLERANCE (UNLESS SPECIFIED DIFFERENTLY):

INCHES	MILLIMETERS
X.XXX = ± 0.005	X.XX = ± 0.010
X.XX = ± 0.025	X.X = ± 0.05
X.X = ± 0.050	X = ± 1

- MATERIAL: 7150-T77511, 7150-T651, 7055-T775*, 7075-T73 OR 2024-T6 ALUMINUM (CLAD OR BARE)
- SURFACE ROUGHNESS: 63 Ra OR BETTER
- FASTENERS (NOT SHOWN):
  REFER TO THE TABLE FOR THE FASTENER AND GRIP LENGTHS TO USE FOR EACH REFERENCE STANDARD NUMBER (BACB30VT BOLTS USE BACC30BP COLLARS). THE GRIP LENGTHS SPECIFIED ARE SATISFACTORY. OTHER GRIP LENGTHS FOR THE BOLTS CAN BE USED IF THE COLLAR CAN BE SATISFACTORILY ATTACHED TO THE BOLT.

  ALTERNATIVE BOLTS AND COLLARS CAN BE USED IF THEY ARE THE SAME MATERIAL AND HAVE THE SAME CONFIGURATION AS THE FASTENERS SPECIFIED
- EDM NOTCH:
  WIDTH - 0.010 (0.25) MAXIMUM
  LENGTH - SEE TABLE
  DEPTH - THROUGH THE THICKNESS

1 ETCH OR STAMP THE REFERENCE STANDARD NUMBER AT APPROXIMATELY THIS LOCATION

2 MULTIPLY THE NOMINAL FASTENER DIAMETER SPECIFIED IN THE TABLE BY 2.5 TO GET THIS DIMENSION

2185839 S0000484401_V2

Reference Standards NDT3190-X
Figure 2

BOEING PROPRIETARY - Copyright © Unpublished Work - See title page for details

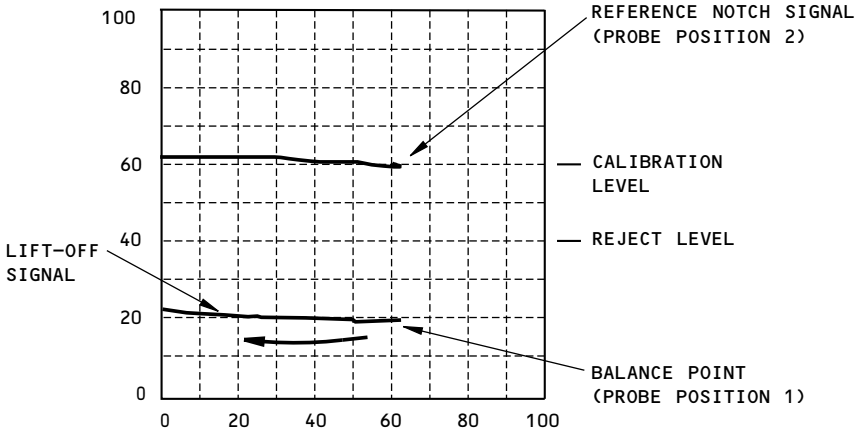

IMPEDANCE PLANE DISPLAY

DETAIL I

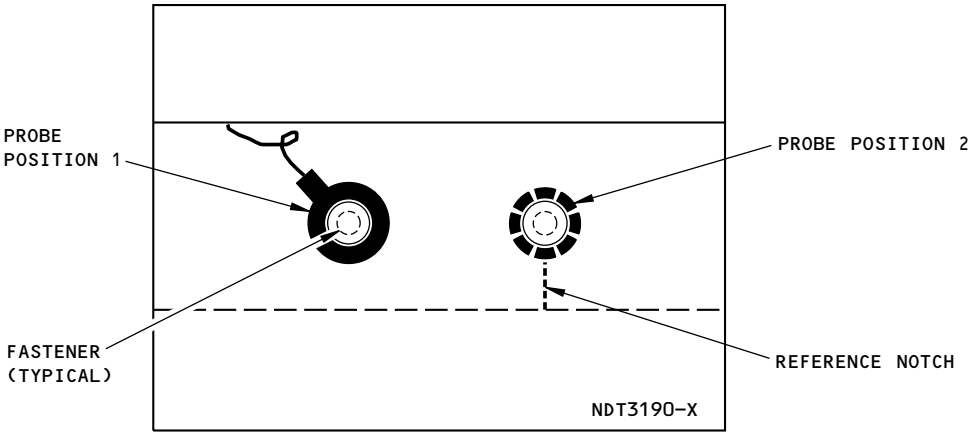

PROBE POSITIONS FOR CALIBRATION ON
REFERENCE STANDARD NDT3190-X

DETAIL II

INSPECTION AREA	AREA A	AREA B	AREA C	AREA D
REFERENCE STANDARD	NDT3190-A	NDT3190-B	NDT3190-C	NDT3190-D
FREQUENCY RANGE	400 Hz - 500 Hz	800 Hz - 1 kHz	1.8 kHz - 2.2 kHz	1.8 kHz - 2.2 kHz
RING PROBE TO USE	PROBE 1	PROBE 1	PROBE 2	PROBE 2

REFERENCE STANDARD, PROBE AND FREQUENCY RANGE
TO USE AT THE DIFFERENT INSPECTION AREAS

TABLE I

2185797 S0000484402_V1

Calibration Details
Figure 3

BOEING PROPRIETARY - Copyright © Unpublished Work - See title page for details

PART 6 - EDDY CURRENT

HORIZONTAL STABILIZER - UPPER CHORD OF THE FRONT SPAR - FORWARD FLANGE - STAB STA 66.5 TO THE STAB TIP (HFEC)

1. Purpose

A. Use this high frequency eddy current (HFEC) procedure to examine the forward flange of the upper chord at the front spar of the horizontal stabilizer for cracks. The inspection area is between stabilizer station 66.5 and the stabilizer tip. See Figure 1 for the inspection areas.

B. This procedure uses an impedance plane display instrument.

C. The upper chord of the horizontal stabilizer is aluminum.

D. 737 Maintenance Planning Data (MPD) Damage Tolerance Rating (DTR) Check Form Reference:

(1) Item: 55-10-06-3

2. Equipment

A. General

(1) Use inspection equipment that can be calibrated on the reference standard as specified in Part 6, 51-00-00, Procedure 23, paragraph 5.

(2) Refer to Part 1, 51-01-00, for data about the equipment manufacturers.

B. Instrument

(1) Use an eddy current instrument that:

(a) Has an impedance plane display.

(b) Operates from 50 to 500 kHz.

(2) The instrument that follows was used to help prepare this procedure.

(a) Phasec 2D/3D; GE Inspection Technologies

C. Probes

(1) Use a probe that operates from 50 to 500 kHz.

(2) The probe that follows was used to help prepare this procedure.

(a) TPEN92-5B; Techna NDT

D. Reference Standards

(1) Use reference standard 126, or an equivalent, as shown in Part 6, 51-00-00, Procedure 23, to help calibrate the instrument.

3. Prepare for the Inspection

A. Identify and get access to all of the inspection areas shown in Figure 1.

(1) It is necessary to remove the leading edge panels to do this inspection.

B. Clean the inspection surfaces.

(1) Remove dirt or grease from the inspection surfaces.

(2) Remove paint only if it is loose.

BOEING PROPRIETARY - Copyright © Unpublished Work - See title page for details

4. Instrument Calibration

A. Calibrate the instrument to examine the forward flange of the upper chord as specified in Part 6, 51-00-00, Procedure 23, paragraph 5.

(1) Use reference standard 126, or an equivalent, as shown in Part 6, 51-00-00, Procedure 23, to help calibrate the instrument.

5. Inspection Procedure

A. Examine the forward flange of the upper chord between stabilizer station 66.5 and the stabilizer tip for cracks as specified in Part 6, 51-00-00, Procedure 23, paragraph 6. Examine the areas that follow:

(1) Examine the forward flange of the upper chord between stabilizer station 66.5 and the stabilizer tip. See Figure 1 for the inspection areas.

(a) Use a nonconductive circle template to keep the probe coil a constant distance from the edge of the fastener hole during the scan. The inspection is done on the upper side of the forward flange.

B. Examine the forward flange of the upper chord for cracks on the opposite side of the airplane.

6. Inspection Results

A. Refer to Part 6, 51-00-00, Procedure 23, paragraph 7, for instructions to help make an analysis of the indications that occur during the inspection.

BOEING PROPRIETARY - Copyright © Unpublished Work - See title page for details

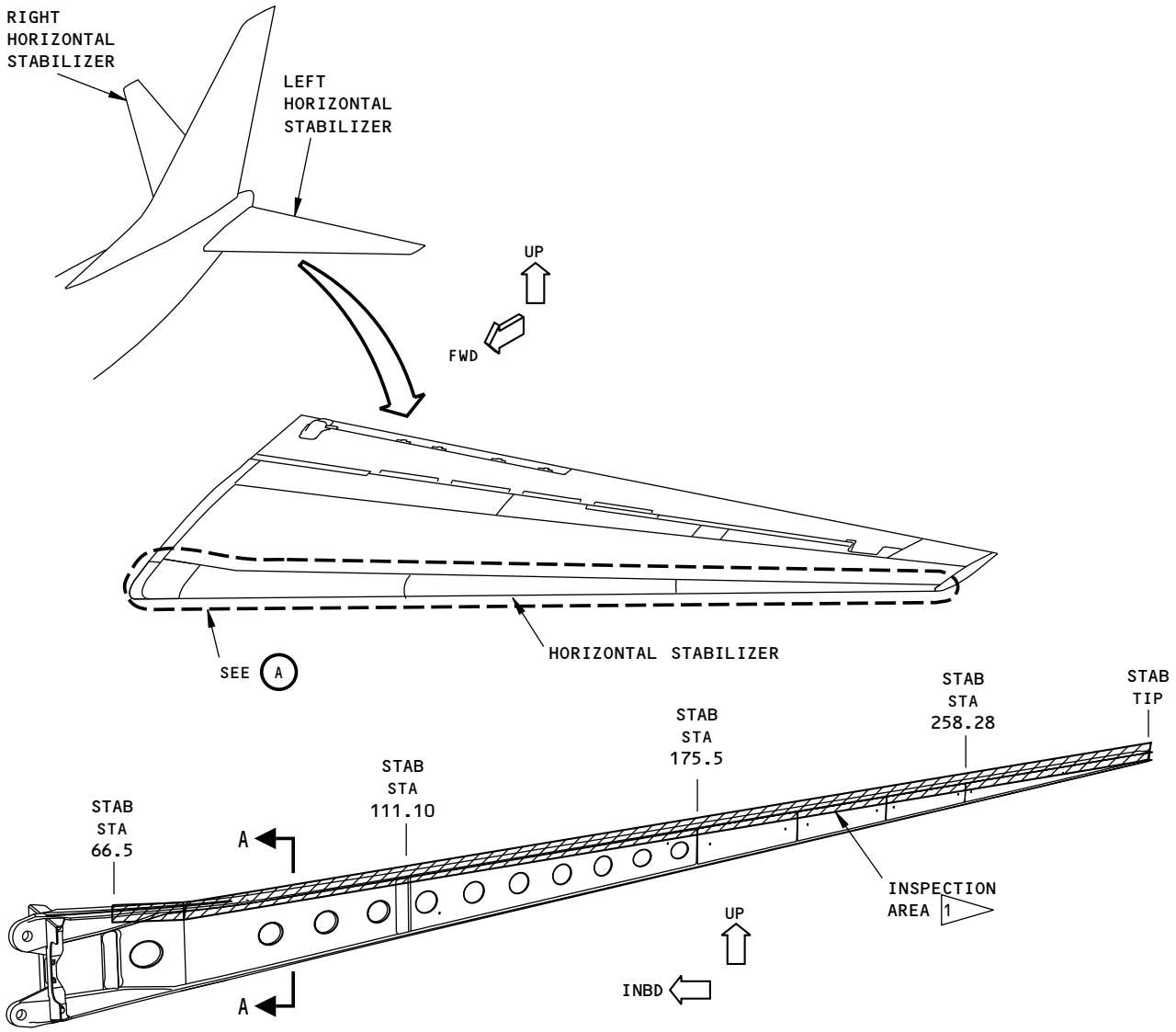

FRONT SPAR OF THE HORIZONTAL STABILIZER
(THE LEFT SIDE IS SHOWN; THE RIGHT SIDE IS OPPOSITE)

A

NOTES:

INSPECTION AREA

1 THE INSPECTION AREA IS BETWEEN STABILIZER STATION 66.5 AND THE STABILIZER TIP

2186428 S0000484821_V1

Inspection Areas
Figure 1 (Sheet 1 of 2)

BOEING PROPRIETARY - Copyright © Unpublished Work - See title page for details

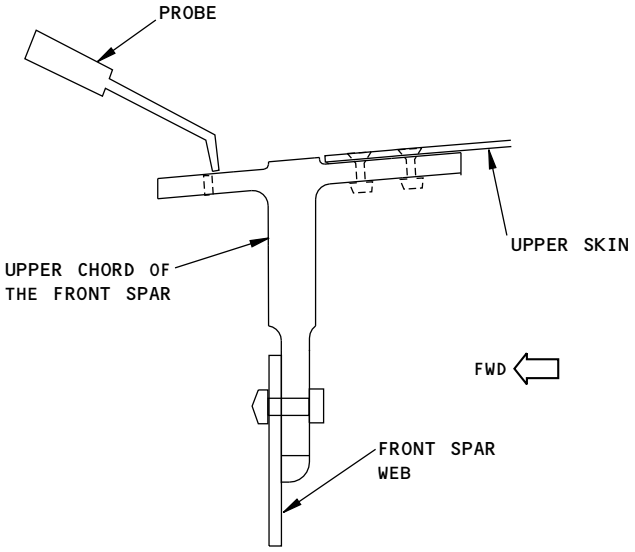

INSPECTION AREA AT THE FORWARD FLANGE (TYPICAL) 2
(THE LEADING EDGE SKIN IS REMOVED)

A-A

NOTES

2 EXAMINE EACH FASTENER HOLE IN THE INSPECTION AREA BETWEEN STABILIZER STATION 66.5 AND THE STABILIZER TIP. USE A NONCONDUCTIVE CIRCLE TEMPLATE TO KEEP THE PROBE COIL A CONSTANT DISTANCE FROM THE EDGE OF THE FASTENER HOLE. THE INSPECTION IS DONE WITH THE PROBE ON TOP OF THE FLANGE.

2186467 S0000484822_V1

Inspection Areas
Figure 1 (Sheet 2 of 2)

BOEING PROPRIETARY - Copyright © Unpublished Work - See title page for details

PART 6 - EDDY CURRENT

HORIZONTAL STABILIZER - UPPER CHORD OF THE FRONT SPAR - WEB FLANGE - STAB STA 66.5 TO THE STAB TIP (HFEC)

1. Purpose

A. Use this high frequency eddy current (HFEC) procedure to examine the web flange of the upper chord at the front spar of the horizontal stabilizer for cracks. The inspection area is between stabilizer station 66.5 and the stabilizer tip. See Figure 1 for the inspection areas.

B. This procedure uses an impedance plane display instrument.

C. The upper chord of the horizontal stabilizer is aluminum.

D. 737 Maintenance Planning Data (MPD) Damage Tolerance Rating (DTR) Check Form Reference:

(1) Item: 55-10-06-4A

(2) Item: 55-10-06-4B

2. Equipment

A. General

(1) Use inspection equipment that can be calibrated on the reference standard as specified in Part 6, 51-00-00, Procedure 23, paragraph 5.

(2) Refer to Part 1, 51-01-00, for data about the equipment manufacturers.

B. Instrument

(1) Use an eddy current instrument that:

(a) Has an impedance plane display.

(b) Operates from 50 to 500 kHz.

(2) The instrument that follows was used to help prepare this procedure.

(a) Phasec 2D/3D; GE Inspection Technologies

C. Probes

(1) Use a probe that operates from 50 to 500 kHz.

(2) The probe that follows was used to help prepare this procedure.

(a) TPEN92-5B; Techna NDT

D. Reference Standards

(1) Use reference standard 126, or an equivalent, as shown in Part 6, 51-00-00, Procedure 23, to help calibrate the instrument.

3. Prepare for the Inspection

A. Identify and get access to all of the inspection areas shown in Figure 1.

(1) It is necessary to remove the leading edge skin to do this inspection.

(2) It is necessary to remove the front spar web between stabilizer station 175.5 and stabilizer station 258.28 to do this inspection.

B. Clean the inspection surfaces.

(1) Remove dirt or grease from the inspection surfaces.

BOEING PROPRIETARY - Copyright © Unpublished Work - See title page for details

(2) Remove paint only if it is loose.

4. Instrument Calibration

A. Calibrate the instrument to examine the web flange of the upper chord as specified in Part 6, 51-00-00, Procedure 23, paragraph 5.

(1) Use reference standard 126, or an equivalent, as shown in Part 6, 51-00-00, Procedure 23, to help calibrate the instrument.

5. Inspection Procedure

A. Examine the web flange of the upper chord between stabilizer station 66.5 and the stabilizer tip for cracks as specified in Part 6, 51-00-00, Procedure 23, paragraph 6. Examine the areas that follow:

(1) Examine the web flange of the upper chord between stabilizer station 66.5 and 175.5 and between stabilizer station 258.28 and the stabilizer tip, identified as Inspection Area A. See Figure 1, View A-A.

(a) Use the upper edge of the web as a probe guide.

(2) Examine the web flange of the upper chord between stabilizer station 175.5 and stabilizer station 258.28, identified as Inspection Area B. See Figure 1, View B-B.

(a) Use a nonconductive circle template to keep the probe coil a constant distance from the edge of the fastener hole during the scan. The inspection is done on the forward side of the web flange.

6. Inspection Results

A. Refer to Part 6, 51-00-00, Procedure 23, paragraph 7, for instructions to help make an analysis of the indications that occur during the inspection.

BOEING PROPRIETARY - Copyright © Unpublished Work - See title page for details

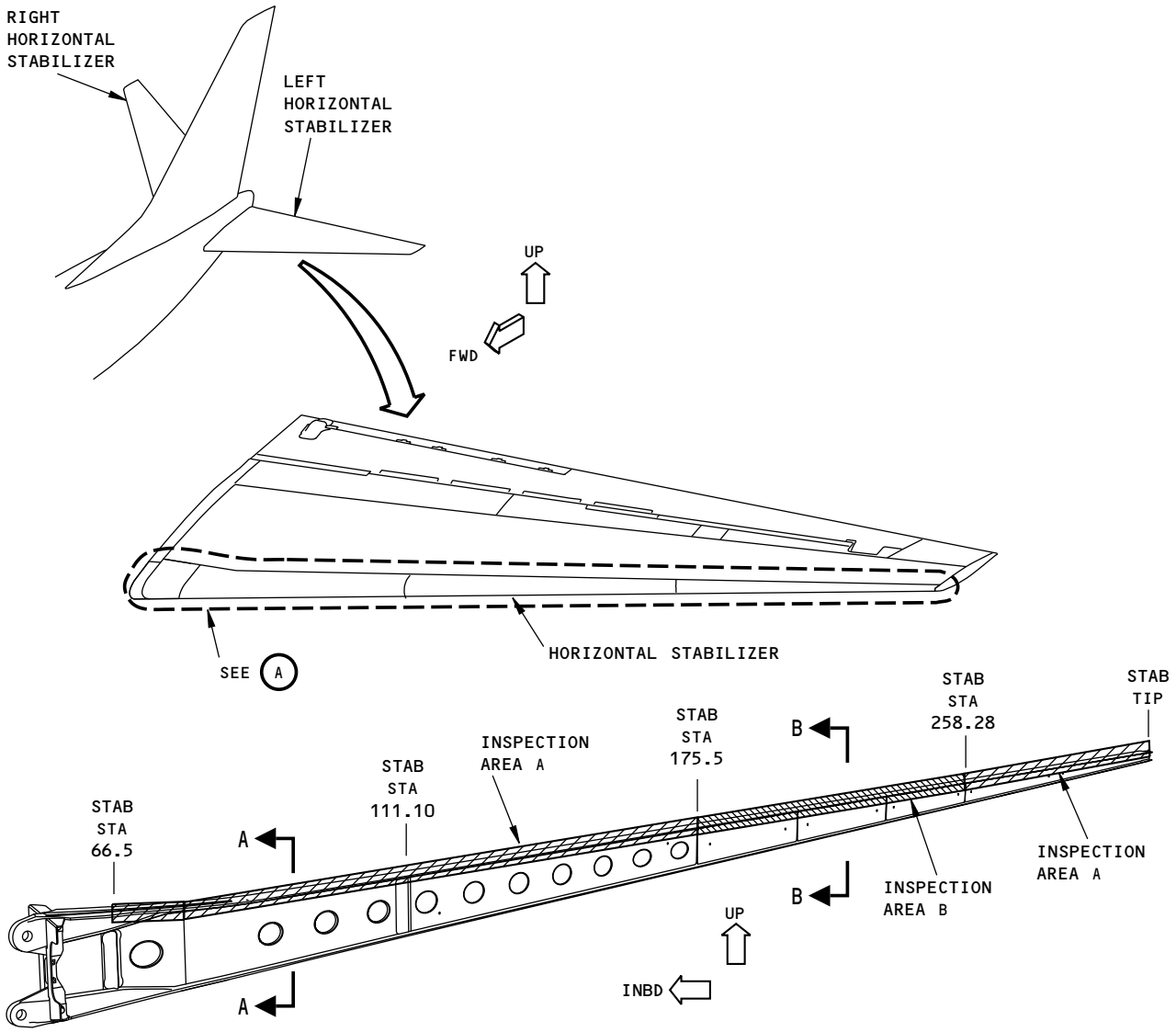

FRONT SPAR OF THE HORIZONTAL STABILIZER
(THE LEFT SIDE IS SHOWN; THE RIGHT SIDE IS OPPOSITE)

A

NOTES:

INSPECTION AREA A

INSPECTION AREA B

1 INSPECTION AREA A IS BETWEEN STABILIZER STATION 66.5 AND 175.5 AND BETWEEN STABILIZER STATION 258.28 AND THE STABILIZER TIP.

2 INSPECTION AREA B IS BETWEEN STABILIZER STATION 175.5 AND 258.28 WHERE THE FRONT SPAR WEB HAS BEEN REMOVED.

2186610 S0000484887_V1

Inspection Areas
Figure 1 (Sheet 1 of 2)

BOEING PROPRIETARY - Copyright © Unpublished Work - See title page for details

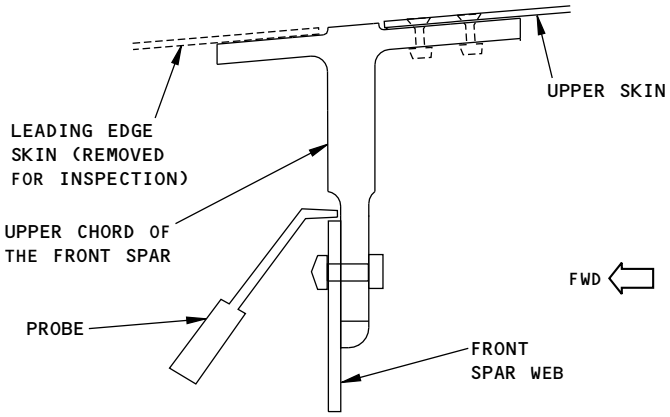

INSPECTION AREA A (TYPICAL) 1

A-A

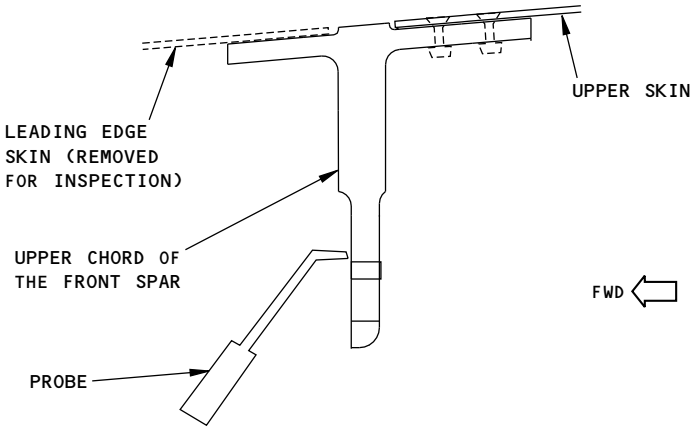

INSPECTION AREA B (TYPICAL)
(THE FRONT SPAR WEB HAS BEEN REMOVED) 2

B-B

NOTES:

1. IT IS NECESSARY TO EXAMINE INSPECTION AREA A AT THE UPPER EDGE OF THE FRONT SPAR WEB AS SHOWN IN VIEW A-A. USE THE UPPER EDGE OF THE FRONT SPAR WEB AS A PROBE GUIDE DURING THE SCAN. INSPECTION AREA A IS BETWEEN STABILIZER STATION 66.5 AND STATION 175.5 AND BETWEEN STABILIZER STATION 258.28 AND THE STABILIZER TIP.

2. IT IS NECESSARY TO EXAMINE INSPECTION AREA B AT THE EDGE OF THE FASTENER HOLE. INSPECTION AREA B IS BETWEEN STABILIZER STATION 175.5 AND STATION 258.28 WHERE THE FRONT SPAR WEB HAS BEEN REMOVED. USE A NONCONDUCTIVE CIRCLE TEMPLATE TO KEEP THE PROBE COIL A CONSTANT DISTANCE FROM THE EDGE OF THE FASTENER HOLE.

2186745 S0000484888_V1

Inspection Areas
Figure 1 (Sheet 2 of 2)

BOEING PROPRIETARY - Copyright © Unpublished Work - See title page for details

PART 6 - EDDY CURRENT

HORIZONTAL STABILIZER - LOWER CHORD OF THE REAR SPAR (HFEC)

1. Purpose

A. Use this high frequency eddy current (HFEC) open hole procedure to examine the lower chord at the rear spar of the horizontal stabilizer for cracks at the fastener location shown in Figure 1.

B. This procedure uses an impedance plane display instrument with a rotary scanner.

C. The lower chord and trailing edge rib are aluminum.

D. 737 Maintenance Planning Data (MPD) Damage Tolerance Rating (DTR) Check Form Reference:

(1) Item: 55-10-05-5

2. Equipment

A. Purpose

(1) Use inspection equipment that can be calibrated on the reference standard as specified in Part 6, 51-00-00, Procedure 16, paragraph 5.

(2) Refer to Part 1, 51-01-00, for data about the equipment manufacturers.

B. Instrument

(1) The instruments that follow were used to help prepare this procedure.

(a) 500D with minimite; Olympus NDT

(b) Phasec 2D/3D; GE Inspection Technologies, with Hocking mini drive.

(c) 2000D with minimite: Olympus NDT (Nortec)

C. Probes

(1) The probes that follow were used to help prepare this procedure.

(a) BXEM-32/40 ½-5/8; Olympus NDT

(b) SPO-5965 .468-.500; Olympus NDT

(c) RAU-D (bolt hole probe extension); NDT Engineering

D. Reference Standard

(1) Use reference standard NDT1021, or an equivalent, to help calibrate the instrument. See Part 6, 51-00-00, Procedure 16, for data about reference standard NDT1021.

3. Prepare for the Inspection

A. Remove the trailing edge panels to get access to the inspection areas.

B. Remove the fastener at the location shown in Figure 1. One fastener hole on each side of the airplane is examined.

C. Prepare the fastener hole for inspection as specified Part 6, 51-00-00, Procedure 16, paragraph 4.

4. Instrument Calibration

A. Calibrate the instrument as specified in Part 6, 51-00-00, Procedure 16, paragraph 5.

BOEING PROPRIETARY - Copyright © Unpublished Work - See title page for details

5. **Inspection Procedure**

   A. Examine the lower chord of the rear spar of the horizontal stabilizer for cracks at the open fastener hole shown in Figure 1 as specified in Part 6, 51-00-00, Procedure 16, paragraph 6.

   B. Do Paragraph 5.A. again to examine the lower chord of the rear spar for cracks at the other horizontal stabilizer.

6. **Inspection Results**

   A. A crack signal will look almost the same as the notch signal from the reference standard. See Part 6, 51-00-00, Procedure 16, paragraph 7.

      (1) Record the location of all crack indications.

   B. Refer to Part 6, 51-00-00, Procedure 16, paragraph 7, for instructions to help make an analysis of the indications that occur during the inspection.

BOEING PROPRIETARY - Copyright © Unpublished Work - See title page for details

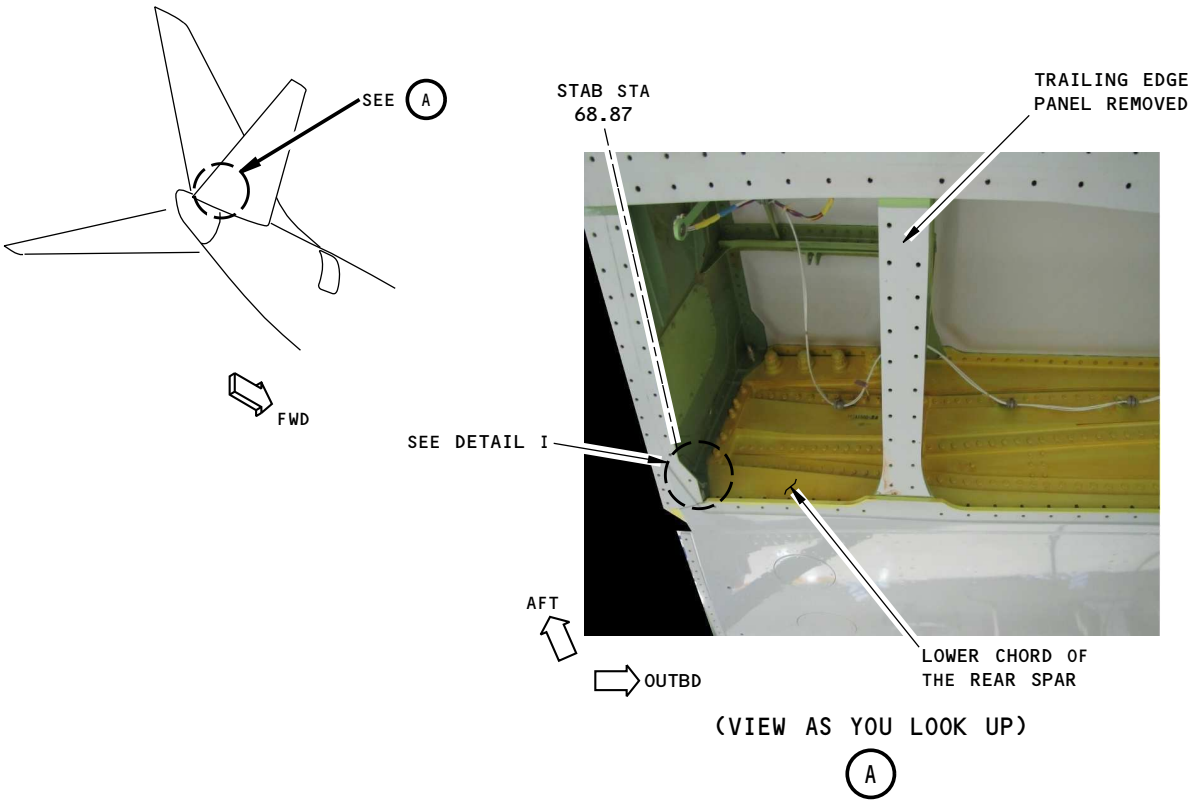

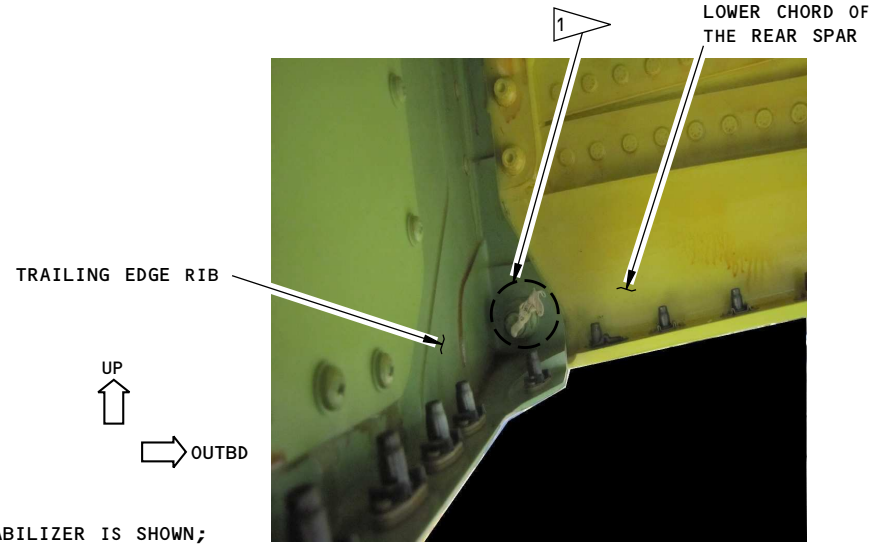

(VIEW AS YOU LOOK FORWARD)
DETAIL I

NOTES

- THE RIGHT HORIZONTAL STABILIZER IS SHOWN; THE LEFT HORIZONTAL STABILIZER IS THE SAME

1 DO AN OPEN HOLE EDDY CURRENT INSPECTION AT THIS FASTENER LOCATION. ONE FASTENER HOLE ON EACH SIDE OF THE AIRPLANE IS EXAMINED.

2218854 S0000495056_V1

Inspection Areas
Figure 1

BOEING PROPRIETARY - Copyright © Unpublished Work - See title page for details

HORIZONTAL STABILIZER - UPPER TERMINAL FITTING OF THE REAR SPAR (HFEC)

1. Purpose

A. Use this high frequency eddy current (HFEC) open hole procedure to examine the upper terminal fittings of the rear spar of the horizontal stabilizer for cracks at the fastener location shown in Figure 1.

B. This procedure uses an impedance plane display instrument with a rotary scanner.

C. The upper terminal fitting is titanium. The trailing edge rib is aluminum.

D. 737 Maintenance Planning Data (MPD) Damage Tolerance Rating (DTR) Check Form Reference:

(1) Item: 55-10-05-4

2. Equipment

A. Purpose

(1) Use inspection equipment that can be calibrated on the reference standard as specified in Part 6, 51-00-00, Procedure 17, paragraph 5.

(2) Refer to Part 1, 51-01-00, for data about the equipment manufacturers.

B. Instrument

(1) The instruments that follow were used to help prepare this procedure.

(a) 500D with minimite; Olympus NDT

(b) Phasec 2D/3D; GE Inspection Technologies, with Hocking mini drive.

(c) 2000D with minimite; Olympus NDT (Nortec)

C. Probes

(1) The probes that follow were used to help prepare this procedure.

(a) BXEM-32/40 ½-5/8; Olympus (NDT Engineering)

(b) SPO-5965 .468-.500; Olympus NDT

(c) RAU-D (bolt hole probe extension); NDT Engineering

D. Reference Standard

(1) Use reference standard NDT1027, or an equivalent, to help calibrate the instrument. See Part 6, 51-00-00, Procedure 17, for data about reference standard NDT1027.

3. Prepare for the Inspection

A. Remove the trailing edge panels to get access to the inspection areas.

B. Remove the fastener at the location shown in Figure 1. One fastener hole on each side of the airplane is examined.

C. Prepare the fastener hole for inspection as specified Part 6, 51-00-00, Procedure 17, paragraph 4.

4. Instrument Calibration

A. Calibrate the instrument as specified in Part 6, 51-00-00, Procedure 17, paragraph 5.

BOEING PROPRIETARY - Copyright © Unpublished Work - See title page for details

5. **Inspection Procedure**

   A. Examine the upper terminal fitting of the rear spar of the horizontal stabilizer for cracks at the open fastener hole shown in Figure 1 as specified in Part 6, 51-00-00, Procedure 17, paragraph 6.

   B. Do Paragraph 5.A. again to examine the upper terminal fitting of the rear spar for cracks at the other horizontal stabilizer.

6. **Inspection Results**

   A. A crack signal will look almost the same as the notch signal from the reference standard. See Part 6, 51-00-00, Procedure 17, paragraph 7.

      (1) Record the location of all crack indications.

   B. Refer to Part 6, 51-00-00, Procedure 17, paragraph 7, for instructions to help make an analysis of the indications that occur during the inspection.

BOEING PROPRIETARY - Copyright © Unpublished Work - See title page for details

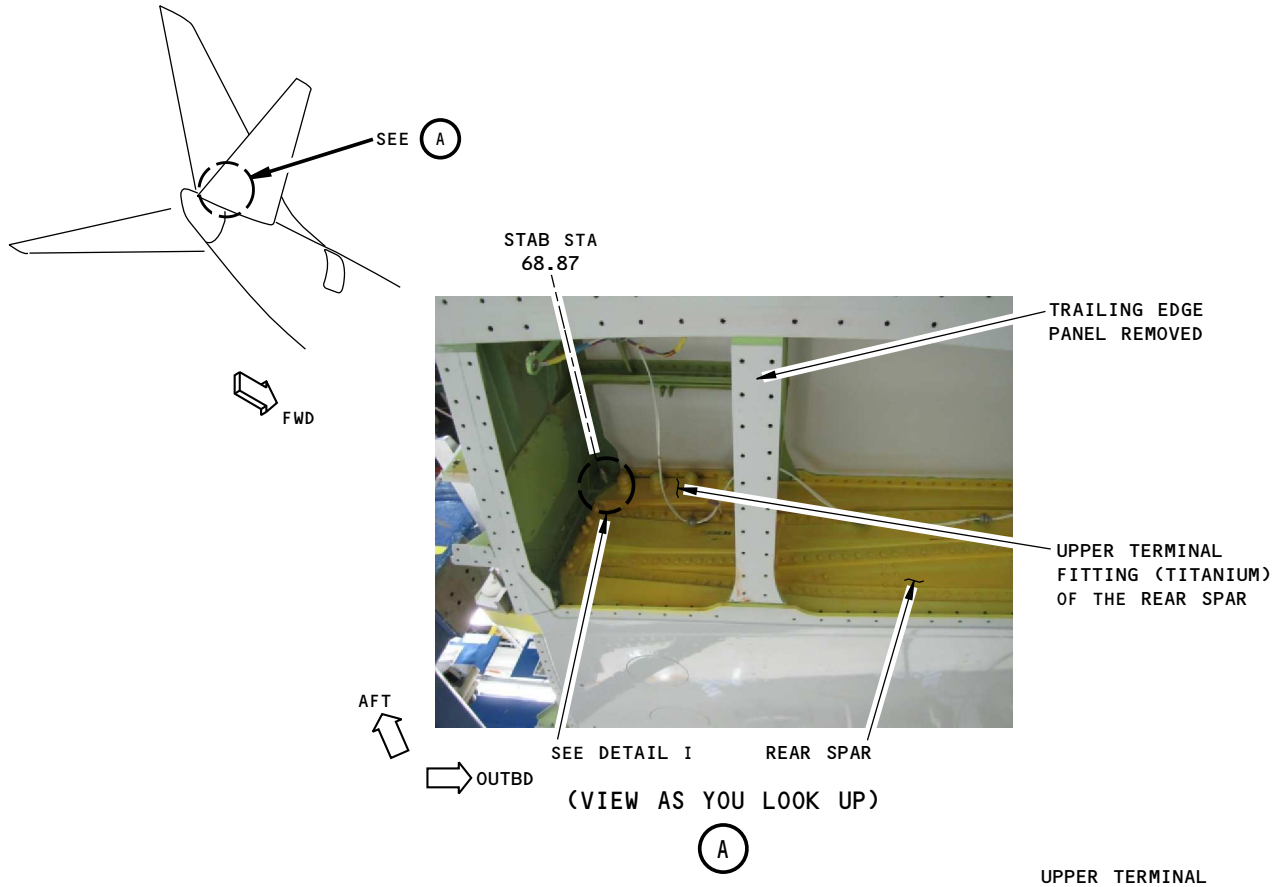

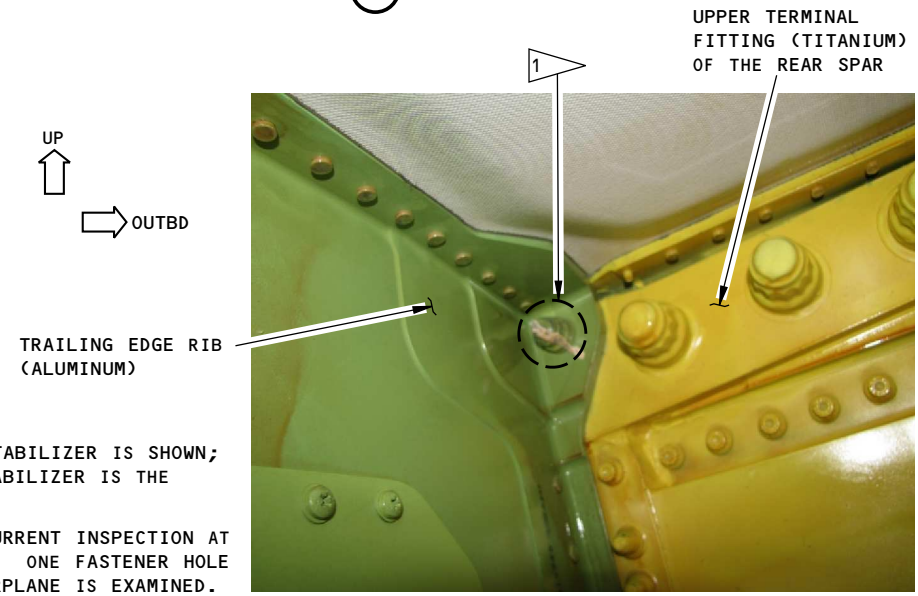

DETAIL I

NOTES

- THE RIGHT HORIZONTAL STABILIZER IS SHOWN; THE LEFT HORIZONTAL STABILIZER IS THE SAME

1 DO AN OPEN HOLE EDDY CURRENT INSPECTION AT THIS FASTENER LOCATION. ONE FASTENER HOLE ON EACH SIDE OF THE AIRPLANE IS EXAMINED.

2218827 S0000495409_V1

Inspection Areas
Figure 1

BOEING PROPRIETARY - Copyright © Unpublished Work - See title page for details

HORIZONTAL STABILIZER - WEB FLANGE OF THE LOWER CHORD OF THE REAR SPAR (LFEC)

1. Purpose

A. Use this low frequency eddy current (LFEC) procedure to examine the web flange of the lower chord at the rear spar of the horizontal stabilizer for subsurface cracks. The lower chord is examined from stabilizer station 310 to stabilizer BL 281 (outboard tip) for subsurface cracks that can start at the fastener holes. See Figure 1 for the inspection area.

B. This procedure uses an impedance plane display instrument.

C. The lower chord is aluminum.

D. 737 Maintenance Planning Data (MPD) Damage Tolerance Rating (DTR) Check Form Reference:

(1) Item: 55-10-04-8

2. Equipment

A. General

(1) Use inspection equipment that can be calibrated on the reference standard.

(2) Refer to Part 1, 51-01-00, for data about the equipment manufacturers.

B. Instrument

(1) Use an eddy current instrument that has an impedance plane display.

(2) The instruments that follow were used to help prepare this procedure.

(a) 500D; Olympus NDT

(b) Phasec 2D/3D; GE Inspection Technologies

C. Probes

(1) Use a reflection ring probe with a minimum inside diameter of 0.29 inch (7.4 mm) and a maximum outside diameter of 0.50 inch (12.7 mm) that can operate between 1 and 5 kHz.

(2) The probe that follows was used to help prepare this procedure.

(a) TEK-4066; Techna NDT

D. Reference Standard

(1) Make reference standard NDT3207. See Figure 2.

3. Prepare for the inspection

A. Identify the inspection area. See Figure 1.

(1) Identify the rib location that starts at stabilizer station 310.

(2) Remove the access doors from the lower skin of the horizontal stabilizer. See Figure 1.

B. Clean the inspection area as necessary.

C. Remove sealant from around the fasteners as necessary.

4. Instrument Calibration

A. Set the instrument frequency between 2 and 3 kHz.

B. Calibrate the instrument as specified in Part 6, 51-00-00, Procedure 9, paragraph 5.

BOEING PROPRIETARY - Copyright © Unpublished Work - See title page for details

5. **Inspection Procedure**

A. Examine the web flange of the lower chord from stabilizer station 310 to stabilizer BL 281 as specified in Part 6, 51-00-00, Procedure 9, paragraph 6, and the steps that follow.

NOTE: It can be necessary to use a probe positioner (see Figure 3). If used, make sure the probe positioner fits tightly in the inner diameter of the ring probe. It is recommended that you use a borescope when it is available. See Figure 1 for the borescope access holes.

(1) Examine the web flange of the lower chord for subsurface cracks around the Group A fasteners.

(2) Examine the web flange of the lower chord for subsurface cracks around the Group B fasteners.

B. Do Paragraph 5.A. again to examine the inspection area on the opposite horizontal stabilizer.

6. **Inspection Results**

A. Refer to Part 6, 51-00-00, Procedure 9, paragraph 7, to help make an analysis of the indications that occur during the inspection.

B. Compare the signals that you get during the inspection to the signals you got from the reference standard.

C. Compare the signal that you got during the inspection to the signal from the same fastener location on the opposite side of the airplane.

D. To make sure that a crack signal is from a crack, do an open hole eddy current inspection as specified in Part 6, 51-00-00, Procedure 16, at the fastener locations that caused the crack signals to occur.

BOEING PROPRIETARY - Copyright © Unpublished Work - See title page for details

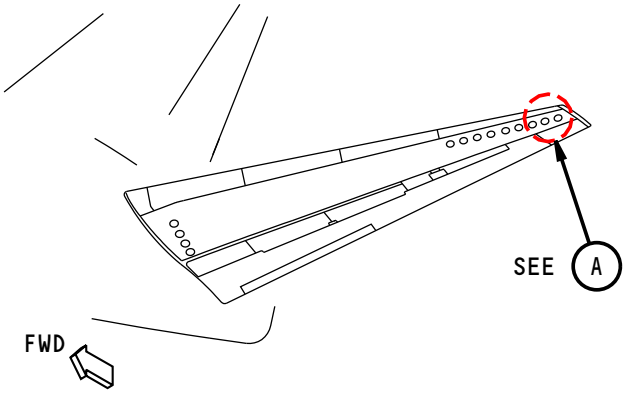

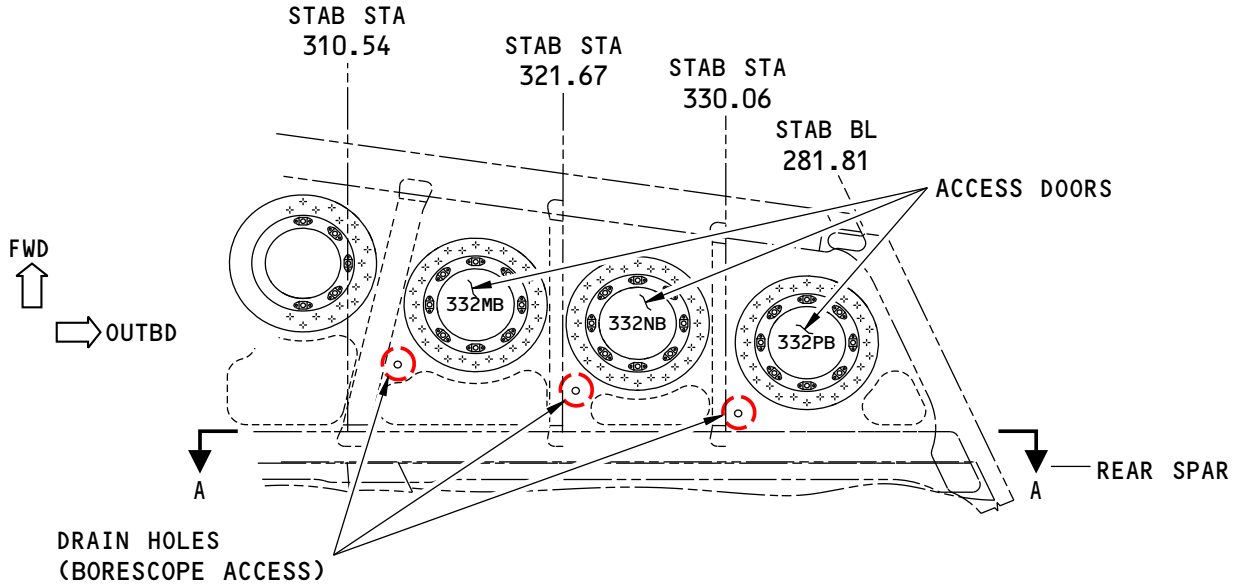

THE LEFT HORIZONTAL STABILIZER IS SHOWN;
THE RIGHT HORIZONTAL STABILIZER IS THE SAME
(VIEW AS YOU LOOK UP)

A

2314171 S0000526298_V1

Inspection Area
Figure 1 (Sheet 1 of 2)

BOEING PROPRIETARY - Copyright © Unpublished Work - See title page for details

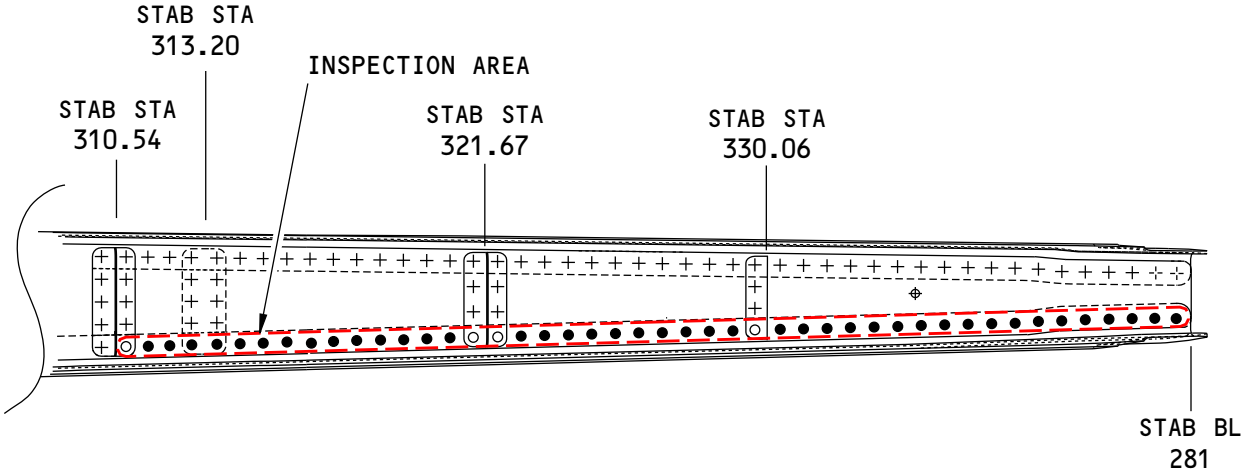

(VIEW AS YOU LOOK AFT INSIDE THE HORIZONTAL STABILIZER)
THE LEFT HORIZONTAL STABILIZER IS SHOWN;
THE RIGHT HORIZONTAL STABILIZER IS THE SAME.

A-A

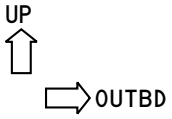

NOTES

- ○ GROUP A FASTENERS
- ● GROUP B FASTENERS

2314194 S0000526299_V1

Inspection Area
Figure 1 (Sheet 2 of 2)

BOEING PROPRIETARY - Copyright © Unpublished Work - See title page for details

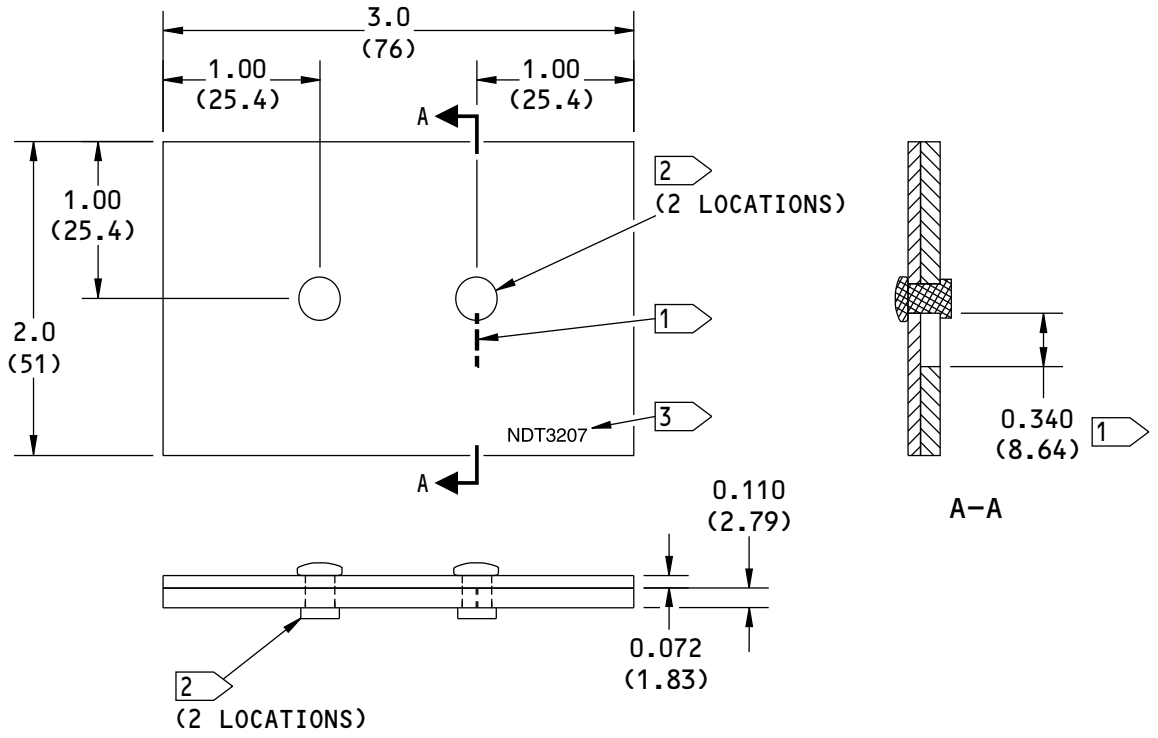

NOTES

- ALL DIMENSIONS ARE IN INCHES (MILLIMETERS ARE IN PARENTHESES)
- TOLERANCE (UNLESS SPECIFIED DIFFERENTLY):

INCHES	MILLIMETERS
X.XXX = ±0.005	X.XX = ±0.010
X.XX = ±0.025	X.X = ±0.05
X.X = ±0.050	X = ±1

- MATERIAL: AIRPLANE QUALITY ALUMINUM, 7075-T6 OR EQUIVALENT
- SURFACE ROUGHNESS: 63 Ra OR BETTER

1 EDM NOTCH:
WIDTH: 0.010 (0.25) MAXIMUM
DEPTH: THROUGH THE THICKNESS
LENGTH: 0.340 (8.64)

2 FASTENERS:
USE BACR15FT5D RIVETS

ALTERNATIVE FASTENERS CAN BE USED IF THEY HAVE THE SAME CONFIGURATION AS THE FASTENERS SPECIFIED

3 ETCH OR STAMP THE REFERENCE STANDARD NUMBER, NDT3207, AT APPROXIMATELY THIS LOCATION

2314250 S0000526300_V1

Reference Standard NDT3207
Figure 2

BOEING PROPRIETARY - Copyright © Unpublished Work - See title page for details

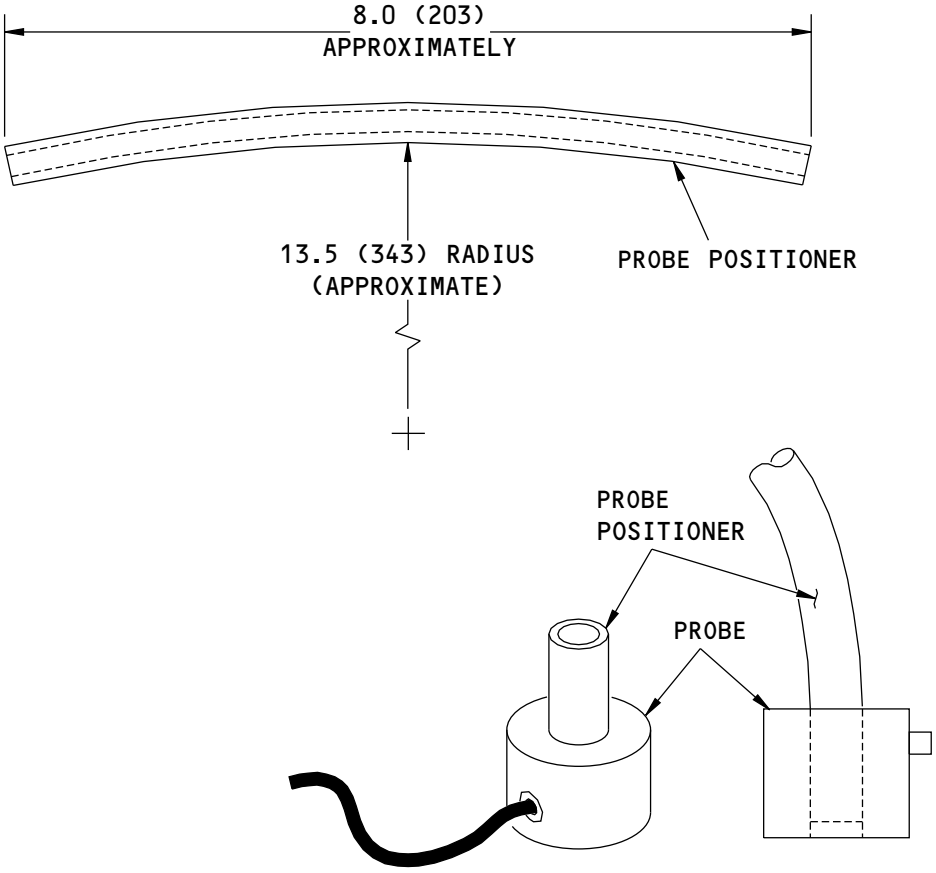

PROBE WITH THE PROBE POSITIONER

NOTES

- ALL DIMENSIONS ARE IN INCHES (MILLIMETERS ARE IN PARENTHESES)
- MATERIAL: PLASTIC ROD OR TUBE
- THE PROBE POSITIONER MUST FIT TIGHTLY INTO THE HOLE OF THE PROBE

2314254 S0000526301_V1

Probe Positioner
Figure 3

BOEING PROPRIETARY - Copyright © Unpublished Work - See title page for details

PART 6 - EDDY CURRENT

HORIZONTAL STABILIZER - FORWARD FLANGE OF THE LOWER CHORD AT THE REAR SPAR (OHEC)

1. Purpose

A. Use this high frequency eddy current (HFEC) open hole procedure to examine the forward flange of the lower chord at the front spar of the horizontal stabilizer for cracks. The lower chord is examined from STAB STA 175.50 to STAB BL 281.81, at the fastener locations shown in Figure 1.

B. This procedure uses an impedance plane display instrument with a rotary scanner.

C. The lower chord is aluminum.

D. 737 Maintenance Planning Data (MPD) Damage Tolerance Rating (DTR) Check Form Reference:

(1) Item: 55-10-06-7A

(2) Item: 55-10-06-8A

2. Equipment

A. Purpose

(1) Use inspection equipment that can be calibrated on the reference standard as specified in Part 6, 51-00-00, Procedure 16, paragraph 5.

(2) Refer to Part 1, 51-01-00, for data about the equipment manufacturers.

B. Instrument

(1) The instruments that follow were used to help prepare this procedure.

(a) 500D with minimite; Olympus NDT

(b) Phasec 2D/3D; GE Inspection Technologies, with Hocking mini drive

(c) 2000D with minimite; Olympus NDT (Nortec)

C. Probes

(1) The probe that follows was used to help prepare this procedure.

(a) BXU-12/16; NDT Engineering

D. Reference Standard

(1) Use reference standard NDT1016, or an equivalent, to help calibrate the instrument. See Part 6, 51-00-00, Procedure 16, for data about reference standard NDT1016.

3. Prepare for the Inspection

A. Remove all the leading edge skin panels that are outboard of LE STA 133.15 (STAB STA 129.5) to do this inspection. See Figure 1.

B. Prepare the fastener hole for inspection as specified in Part 6, 51-00-00, Procedure 16, paragraph 4.

4. Instrument Calibration

A. Calibrate the instrument as specified in Part 6, 51-00-00, Procedure 16, paragraph 5.

BOEING PROPRIETARY - Copyright © Unpublished Work - See title page for details

5. **Inspection Procedure**

   A. Examine the forward flange of the lower chord at the front spar of the horizontal stabilizer for cracks. Do the inspections at the open fastener hole locations from STAB STA 175.50 to STAB BL 281 (see Figure 1) as specified in Part 6, 51-00-00, Procedure 16, paragraph 6.

   B. Do Paragraph 5.A. again to examine the forward flange of the lower chord for cracks at the front spar of the other horizontal stabilizer.

6. **Inspection Results**

   A. A crack signal will look almost the same as the notch signal from the reference standard. See Part 6, 51-00-00, Procedure 16, paragraph 7.

      (1) Record the location of all crack indications.

   B. Refer to Part 6, 51-00-00, Procedure 16, paragraph 7, for instructions to help make an analysis of the indications that occur during the inspection.

BOEING PROPRIETARY - Copyright © Unpublished Work - See title page for details

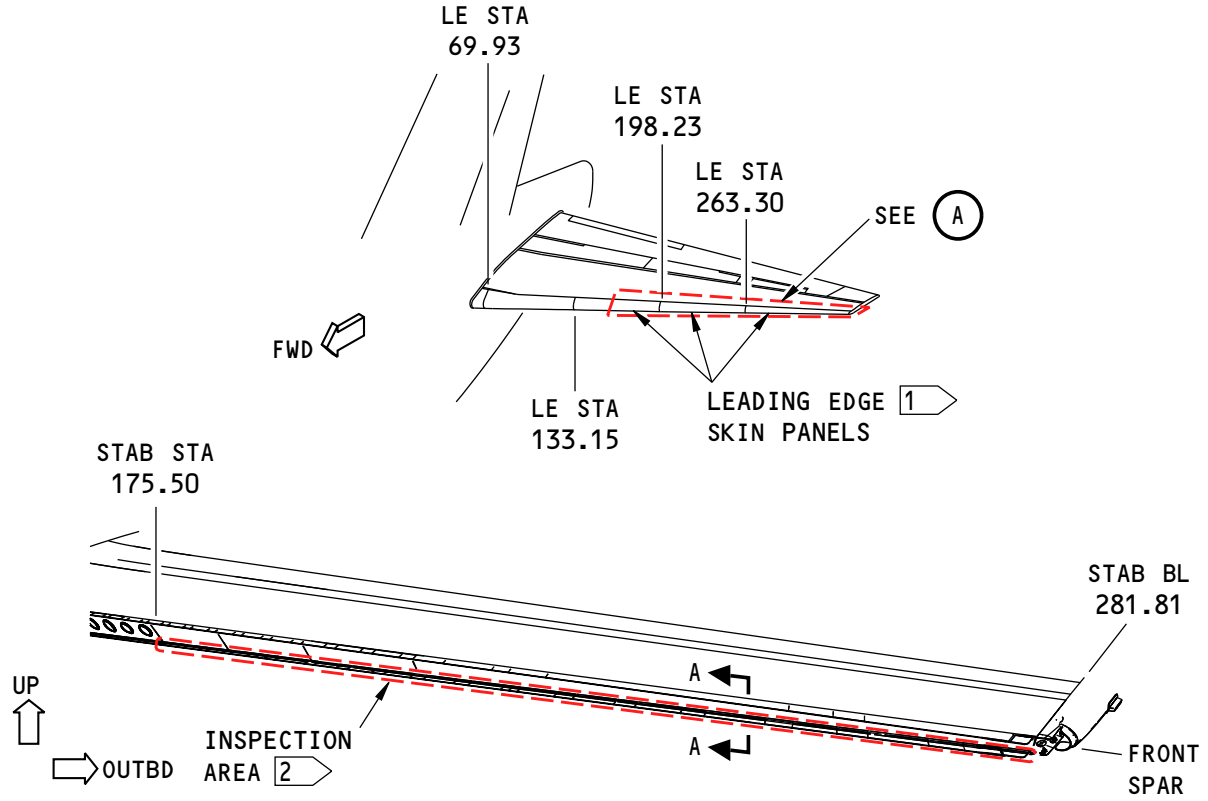

THE LEFT HORIZONTAL STABILIZER IS SHOWN;
THE RIGHT HORIZONTAL STABILIZER IS THE SAME
(VIEW AS YOU LOOK AFT)

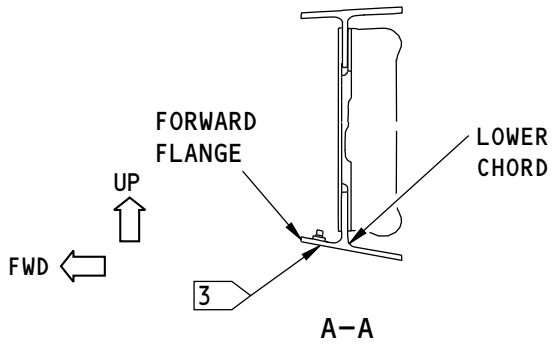

NOTES

1. REMOVE THE LEADING EDGE SKIN PANELS THAT ARE OUTBOARD OF LE STA 133.15
2. DO AN OPEN HOLE EDDY CURRENT INSPECTION TO EXAMINE THE FORWARD FLANGE OF THE LOWER CHORD AT THE FRONT SPAR FOR CRACKS AT ALL FASTENER LOCATIONS FROM STAB STA 175.50 TO STAB BL 281.81
3. EXAMINE THE OPEN FASTENER HOLES FOR CRACKS FROM THIS SIDE

2314142 S0000526303_V1

Inspection Areas
Figure 1

BOEING PROPRIETARY - Copyright © Unpublished Work - See title page for details

HORIZONTAL STABILIZER - AFT FLANGE OF THE LOWER CHORD AT THE REAR SPAR (HFEC)

1. Purpose

A. Use this high frequency eddy current (HFEC) procedure to examine the aft flange of the lower chord at the rear spar of the horizontal stabilizer for cracks. This inspection looks for cracks that can start at the five rivet locations between STAB STA 242 and 247 (EL STA 197 to 203). See Figure 1 for the inspection area.

B. This procedure uses an impedance plane display instrument.

C. The lower chord is aluminum.

D. 737 Maintenance Planning Data (MPD) Damage Tolerance Rating (DTR) Check Form Reference:

(1) Item: 55-10-04-9

2. Equipment

A. General

(1) Use inspection equipment that can be calibrated on the reference standard as specified in Part 6, 51-00-00, Procedure 23, paragraph 5.

(2) Refer to Part 1, 51-01-00, for data about the equipment manufacturers.

B. Instrument

(1) Use an eddy current instrument that:

(a) Has an impedance plane display.

(b) Operates from 50 to 500 kHz.

(2) The instruments that follow were used to help prepare this procedure.

(a) 500D; Olympus NDT

(b) Phasec 2D/3D; GE Inspection Technologies

C. Probes

(1) Use a probe that:

(a) Operates from 50 to 500 kHz.

(b) Has a 90 degree angle with a minimum drop of 0.2 inch (5 mm).

(2) The probes that follow were used to help prepare this procedure.

NOTE: Shielded probes are recommended.

(a) MTF902-60B (50kHz-300kHz); NDT Engineering

(b) PA90402 (50kHz-500kHz); EC NDT

D. Reference Standards

(1) Use reference standard 188A, or an equivalent, to help calibrate the instrument. Refer to Part 6, 51-00-00, Procedure 23, for data about reference standard 188A.

3. Prepare for the Inspection

A. Identify the inspection area shown in Figure 1.

BOEING PROPRIETARY - Copyright © Unpublished Work - See title page for details

B. Open the trailing edge panel at EL STA 205.5 to get access to the lower chord of the rear spar. See Figure 1.

C. Remove dirt or grease from the inspection surfaces.

D. Remove paint only if it is loose.

4. Instrument Calibration

A. Calibrate the instrument as specified in Part 6, 51-00-00, Procedure 23, paragraph 5.

(1) Use reference standard 188A, or an equivalent, to help calibrate the instrument.

5. Inspection Procedure

A. Examine the aft flange of the lower chord at the rear spar of the horizontal stabilizer for cracks at the rivet locations shown in Figure 1.

(1) Do the inspection as specified in Part 6, 51-00-00, Procedure 23, paragraph 6.

(2) Make a full scan around each rivet tail.

B. Do Paragraph 5.A. again to look for cracks in the lower chord at the rear spar of the other horizontal stabilizer.

6. Inspection Results

A. Refer to Part 6, 51-00-00, Procedure 23, paragraph 7, for instructions to help make an analysis of the indications that occur during the inspection.

BOEING PROPRIETARY - Copyright © Unpublished Work - See title page for details

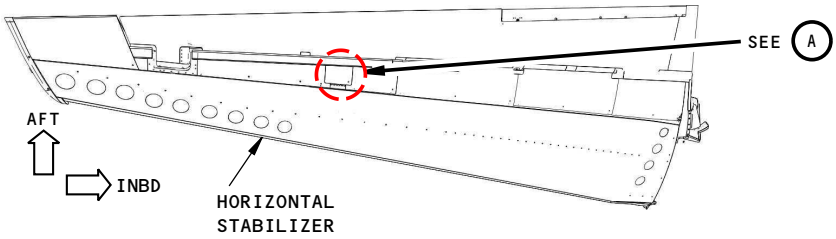

VIEW AS YOU LOOK UP
THE LEFT HORIZONTAL STABILIZER IS SHOWN;
THE RIGHT HORIZONTAL STABILIZER IS THE SAME

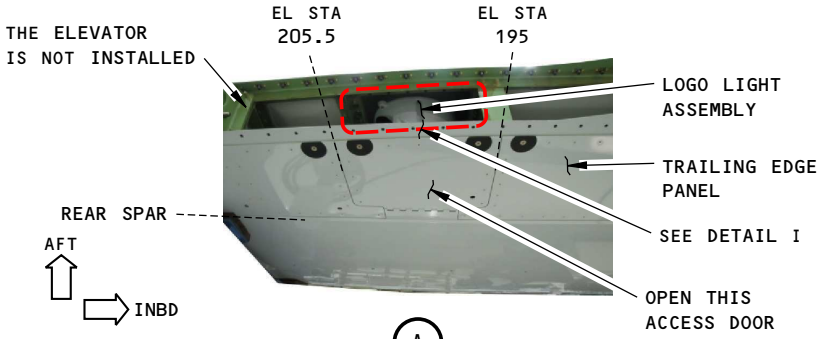

A

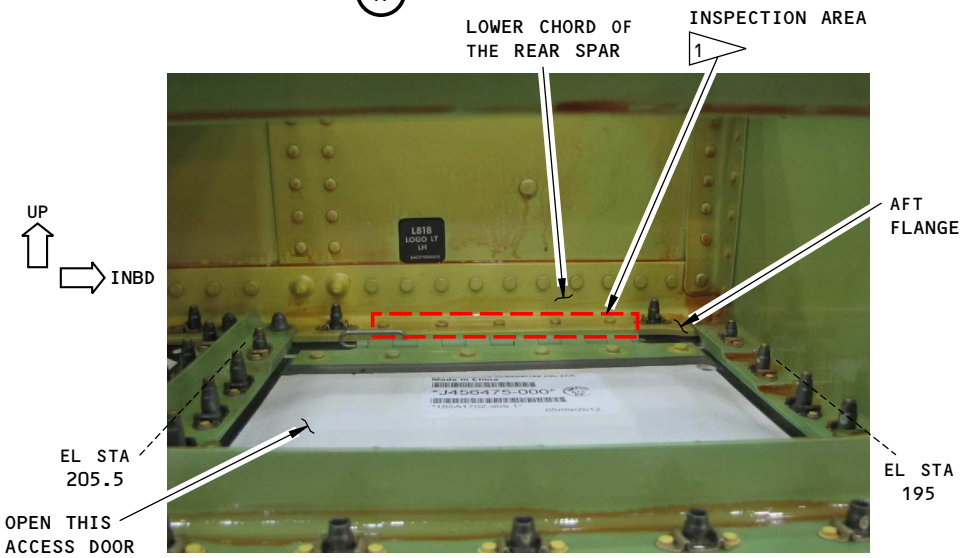

VIEW AS YOU LOOK FORWARD
INSIDE THE TRAILING EDGE OF
THE HORIZONTAL STABILIZER
DETAIL I 2

NOTES

1. MAKE A SCAN AROUND EACH RIVET TAIL. FIVE RIVETS ON EACH SIDE OF THE AIRPLANE ARE EXAMINED.
2. THE LOGO LIGHT ASSEMBLY IS NOT SHOWN

2380013 S0000545921_V1

Inspection Area
Figure 1

BOEING PROPRIETARY - Copyright © Unpublished Work - See title page for details

PART 6 - EDDY CURRENT

HORIZONTAL STABILIZER - LOWER CHORD OF THE FRONT SPAR FROM STAB STA 66.50 TO 175.50 (LFEC)

1. Purpose

A. Use this procedure to examine the lower chord of the front spar of the horizontal stabilizer from STAB STA 66.50 to 175.50. The inspection is done through the lower skin of the horizontal stabilizer to find cracks in the aft flange of the lower chord at the fastener holes. The cracks in the lower chord are usually in the forward to aft direction. See Figure 1 for the inspection area.

B. The lower skin and the lower chord are aluminum.

C. This procedure uses low frequency eddy current (LFEC) with ring probes that are put on each fastener in the inspection area. It is necessary to use only one ring probe to examine all of the rivet locations in the inspection area on all 737 airplane line numbers. For 737 airplane line numbers 3624 and on, however, it is necessary to also use a different ring probe to examine all of the bolt locations in the inspection area.

D. This procedure uses an impedance plane display instrument.

E. This procedure identifies two reference standards. Only one of the reference standards is necessary to use to examine the inspection area for 737 airplane line numbers 1 thru 3623. Two reference standards are necessary to use to examine the inspection area for 737 airplane line numbers 3624 and on. See Figure 2 and Figure 3 for data about these reference standards.

F. 737 Maintenance Planning Data (MPD) Damage Tolerance Rating (DTR) Check Form Reference:

(1) Item: 55-10-06-6B

2. Equipment

A. General

(1) Use inspection equipment that can be calibrated on the reference standards as specified in Paragraph 4.

(2) Refer to Part 1, 51-01-00, for data about the equipment manufacturers.

(3) Instrument – Use an eddy current instrument with an impedance plane display. Use an instrument that:

(a) Can operate at a frequency between 1 and 2 kHz.

(b) Can be calibrated as specified in the calibration instructions of this procedure. The instruments that follow were used to help prepare this procedure.

1) Phasec 3D; GE Inspection Technologies

2) Nortec 2000; Olympus NDT

B. Probes

(1) This inspection procedure lists two reflection ring probes with two different inner diameters. The ring probes must operate between 1 and 2 kHz.

(a) For all 737 airplane line numbers, use a ring probe with an inner diameter that is between 0.37 and 0.40 inches (9.4 and 10.0 mm) to examine all of the rivet locations in the inspection area. Do not use this ring probe at the bolt locations shown in View C of Figure 1.

BOEING PROPRIETARY - Copyright © Unpublished Work - See title page for details

(b) For 737 airplane line numbers 3624 and on, use a ring probe with an inner diameter that is between 0.45 and 0.50 inches (11.4 and 12.7 mm) to examine the bolt locations at the stiffeners in the inspection area.

(2) The probes that follow were used to help prepare this procedure.

(a) ARP-.37-.84/2kHz; this probe has a 0.37 inch (9.4 mm) inner diameter. It is made by Aerofab NDT; phone: (206) 920-6038; e-mail address: fstearns@aerofabndt.com. This probe worked best at 1 kHz and can be used on the rivets for all 737 airplane line numbers.

(b) NEC-4028-2; this probe has a 0.50 inch (12.7 mm) inner diameter: It is made by Olympus NDT. This probe worked best at 1 kHz and can be used on the bolts at the stiffener locations from 737 airplane line numbers 3624 and on.

(c) Equivalent probes can be used if the calibration in Paragraph 4. can be done.

C. Reference Standard

(1) Make reference standard NDT3202-G as specified in Figure 2. Figure 2 identifies more than one reference standard but it is only necessary to make NDT3202-G. This reference standard is used to help calibrate the equipment to examine the rivet locations specified in this procedure for all airplane line numbers.

(2) Make reference standard NDT3218 as specified in Figure 3 if you will do this procedure on airplane line numbers 3624 and on. This reference standard is used to help calibrate the equipment to examine the bolt locations at the stiffeners in the inspection area for airplane line numbers 3624 and on. This reference standard is not necessary for line numbers 1 thru 3623.

D. Special Tools

(1) An optional head lamp can be worn on the head to help put the fastener heads in the center of the ring probe.

3. Prepare for the Inspection

A. Identify the inspection area shown in Figure 1 for the line number of the airplane to be examined.

B. Get access to the inspection area on the lower skin of the horizontal stabilizer at the lower chord of the front spar. See Figure 1.

C. Clean the inspection surface, if necessary, that the ring probe will touch (at fastener locations) on the lower skin along the lower chord of the front spar. Remove paint only if it is loose. See Figure 1 for the inspection area.

4. Instrument Calibration

A. Calibrate the instrument with reference standard NDT3202-G to examine the lower chord for cracks at the rivet locations in the inspection area for all 737 airplane line numbers. See Figure 1 for the inspection area.

NOTE: This calibration is not for the bolt locations at the stiffeners on line numbers 3624 and on.

(1) Set the instrument frequency between 1 and 2 kHz.

(2) Put the probe with the 0.37 to 0.40 inch (9.4 to 10.0 mm) inner diameter on reference standard NDT3202-G at probe position 1 as shown in Detail II of Figure 4.

(3) Balance the instrument.

(4) Move the probe lightly above the rivet as necessary until the height of the signal is at a minimum and balance the instrument again.

BOEING PROPRIETARY - Copyright © Unpublished Work - See title page for details

(5) Set the balance point at approximately 20 percent of full screen height (FSH) and approximately 60 percent of full screen width (FSW) as shown in Detail I of Figure 4.

(6) Adjust the phase control so that the lift-off signal moves horizontally from right to left when the probe is lifted off of the reference standard. See Detail I in Figure 4.

(7) Put the probe on the reference standard at probe position 2 as shown in Detail II of Figure 4.

NOTE: Make sure the fastener is in the center of the probe.

(8) Move the probe lightly above the fastener as necessary until the height of the signal is at its minimum.

(9) Adjust the instrument gain to put the maximum signal from the reference notch at 60 percent of FSH as shown in Detail I of Figure 4. If necessary, it is permitted to set the horizontal gain 6 to 12 dB lower than the vertical gain to keep the signals on the display.

(10) Do Paragraph 4.A.(2), Paragraph 4.A.(3), Paragraph 4.A.(4), Paragraph 4.A.(7), Paragraph 4.A.(8) and Paragraph 4.A.(9) again, as necessary, to make sure the notch signal is at 60 percent of FSH.

B. Calibrate the instrument with reference standard NDT3218 to examine the lower chord for cracks at the bolt locations in the inspection area for 737 airplane line numbers 3624 and on. This calibration is used to examine the bolt locations at the stiffeners in the inspection area. See Figure 1 for the inspection area.

(1) Do Paragraph 4.A.(1) thru Paragraph 4.A.(10), but this time use reference standard NDT3218 and a ring probe with an inner diameter that is between 0.45 and 0.50 inches (11.4 and 12.7 mm). Also, see Figure 4, Details I and III for this calibration.

5. Inspection Procedure

A. Examine the lower chord of the front spar in the horizontal stabilizer for cracks through the lower skin at all of the rivet locations from STAB STA 66.5 to 175.5 for all 737 airplane line numbers. See Figure 1 for the inspection area.

(1) Calibrate the instrument as specified in Paragraph 4.A.

(2) Put the probe on one of the rivets in the inspection area and make sure the rivet is in the center of the ring probe. Move the probe a small quantity to get the minimum signal from the instrument. See Figure 1 for the rivets in the inspection area.

(3) Balance the instrument.

(4) Put the probe on a rivet in the inspection area (in the same rivet row) that is adjacent to the rivet you put the probe on in Paragraph 5.A.(2) and monitor the signal height. Do this again on an adjacent rivet (in the same rivet row) and monitor the signal height from that rivet location. Figure 1 shows the two rivet rows.

(5) Put the probe back on the rivet (from the 3 rivets specified in Paragraph 5.A.(2) and Paragraph 5.A.(4) that caused the lowest signal to occur. Make sure the rivet is in the center of the probe. Adjust the probe on this rivet to put the signal at its minimum height. Use the signal from this rivet location as the baseline signal during the inspection (to compare other rivet location signals with the signal from this rivet location).

(6) Balance the instrument.

NOTE: Do not put the probe on the bolts that are at the stiffener locations on the lower chord shown in View C in Figure 1. These bolt locations will be examined in Paragraph 5.B.

BOEING PROPRIETARY - Copyright © Unpublished Work - See title page for details

(7) Put the probe on an adjacent rivet (in the same rivet row) in the inspection area and make sure the rivet is in the center of the ring probe. Lightly adjust the probe at this location to put the signal at its minimum height.

(8) Do Paragraph 5.A.(7) again for all of the rivets in the same row. See Figure 1 for all of the rivet locations to be examined in the inspection area. During the inspection, make a mark at the locations that cause signals to occur that are 40 percent (or more) of FSH. During the inspection, do not move the probe from one row to the other.

(9) Put the probe on a rivet in the other row of the inspection area and do Paragraph 5.A.(2) thru Paragraph 5.A.(5).

(10) Do Paragraph 5.A.(8) again for all of the rivets in this other row. During the inspection, do not move the probe from one row to the other.

(11) Do a calibration check when the inspection is complete (for each side of the horizontal stabilizer) as follows:

(a) Put the probe on reference standard NDT3202-G at probe position 1 and make sure the rivet is in the center of the ring probe. See Figure 4, Detail II.

(b) Lightly adjust the probe until the height of the signal is at its minimum.

(c) Balance the instrument.

(d) Put the probe on reference standard NDT3202-G at probe position 2 and make sure the rivet is in the center of the ring probe. Lightly adjust the probe so the notch signal is at a minimum height. Compare the signal you got from the notch during the calibration with the signal you get now. See Figure 4, Detail I.

(e) If the signal you now get from the notch has decreased in FSH by 10 percent or more, do the calibration and inspection again on the rivet locations you have examined since the last satisfactory calibration check. See Figure 4, Detail I.

(12) Do the inspection on the other horizontal stabilizer as specified in Paragraph 5.A.(1) thru Paragraph 5.A.(11).

B. Examine the lower chord of the front spar in the horizontal stabilizer for cracks through the lower skin at all of the bolt locations at STAB STA88.0, 97.20, 106.40, 115.60, 125.00, 134.20, 143.40, 152.60, 161.80, and 171.00. These bolt locations are installed in the horizontal stabilizers from 737 airplane line numbers 3624 and on.

(1) Calibrate the instrument as specified in Paragraph 4.B.

(2) Put the probe on one of the bolts in the inspection area and make sure the bolt is in the center of the ring probe. Move the probe a small quantity to get the minimum signal from the instrument. See Figure 1 for the bolts in the inspection area.

(3) Balance the instrument.

(4) Put the probe on the adjacent bolt in the inspection area and monitor the signal height. Do this again on a different bolt in the inspection area and monitor the signal height from that bolt.

(5) Put the probe on the bolt (from the 3 bolts specified in Paragraph 5.B.(2) and Paragraph 5.B.(4) that caused the lowest signal to occur. Make sure the bolt head is in the center of the probe. Adjust the probe on this bolt head to put the signal at its minimum height. Use the signal from this bolt location as the baseline signal during the inspection (to compare other bolt location signals with the signal from this bolt location).

BOEING PROPRIETARY - Copyright © Unpublished Work - See title page for details

(6) Balance the instrument.

NOTE: Do not put this probe on the rivet locations. The rivet inspection procedure is specified in Paragraph 5.A.

(7) Put the probe on an adjacent bolt in the inspection area and make sure the bolt head is in the center of the ring probe. Lightly adjust the probe at this location to put the signal at its minimum height.

(8) Do Paragraph 5.B.(7) again at all of the bolt locations in the inspection area. See View C in Figure 1 for the bolt locations in the inspection area. During the inspection, make a mark at the locations that cause signals to occur that are 40 percent (or more) of FSH.

(9) Do a calibration check when the inspection is complete (for each horizontal stabilizer) as follows:

(a) Put the probe on referenced standard NDT3218 at probe position 1 and make sure the bolt head is in the center of the ring probe. See Figure 4, Detail III.

(b) Lightly adjust the probe until the height of the signal is at a minimum.

(c) Balance the instrument.

(d) Put the probe on reference standard NDT3218 at probe position 2 and make sure the bolt is in the center of the ring probe. Lightly adjust the probe to put the notch signal at its minimum height. Compare the signal you got from the notch during the calibration with the signal you get now. See Figure 4, Details I and III.

(e) If the signal you get from the notch has decreased in FSH by 10 percent or more, do the calibration and inspection again at the bolt locations you have examined since the last satisfactory calibration check. See Figure 4, Detail I.

(10) Do the inspection on the other horizontal stabilizer as specified in Paragraph 5.B.(1) thru Paragraph 5.B.(9).

6. Inspection Results

A. A signal that is 40% (or more) of FSH is a sign of a crack and the location must be rejected. More analysis is necessary at locations that cause crack type signals to occur.

B. Compare the signal that occurs during the inspection to the signal you got from the notch in the reference standard during calibration. See Paragraph 4.A. for the calibration data for the rivets that were examined. See Paragraph 4.B. for the calibration data for the bolts that were examined.

C. If crack indications are found, do an open hole eddy current inspection as specified in Part 6, 51-00-00, Procedure 16, to make sure the crack indication is from a crack.

BOEING PROPRIETARY - Copyright © Unpublished Work - See title page for details

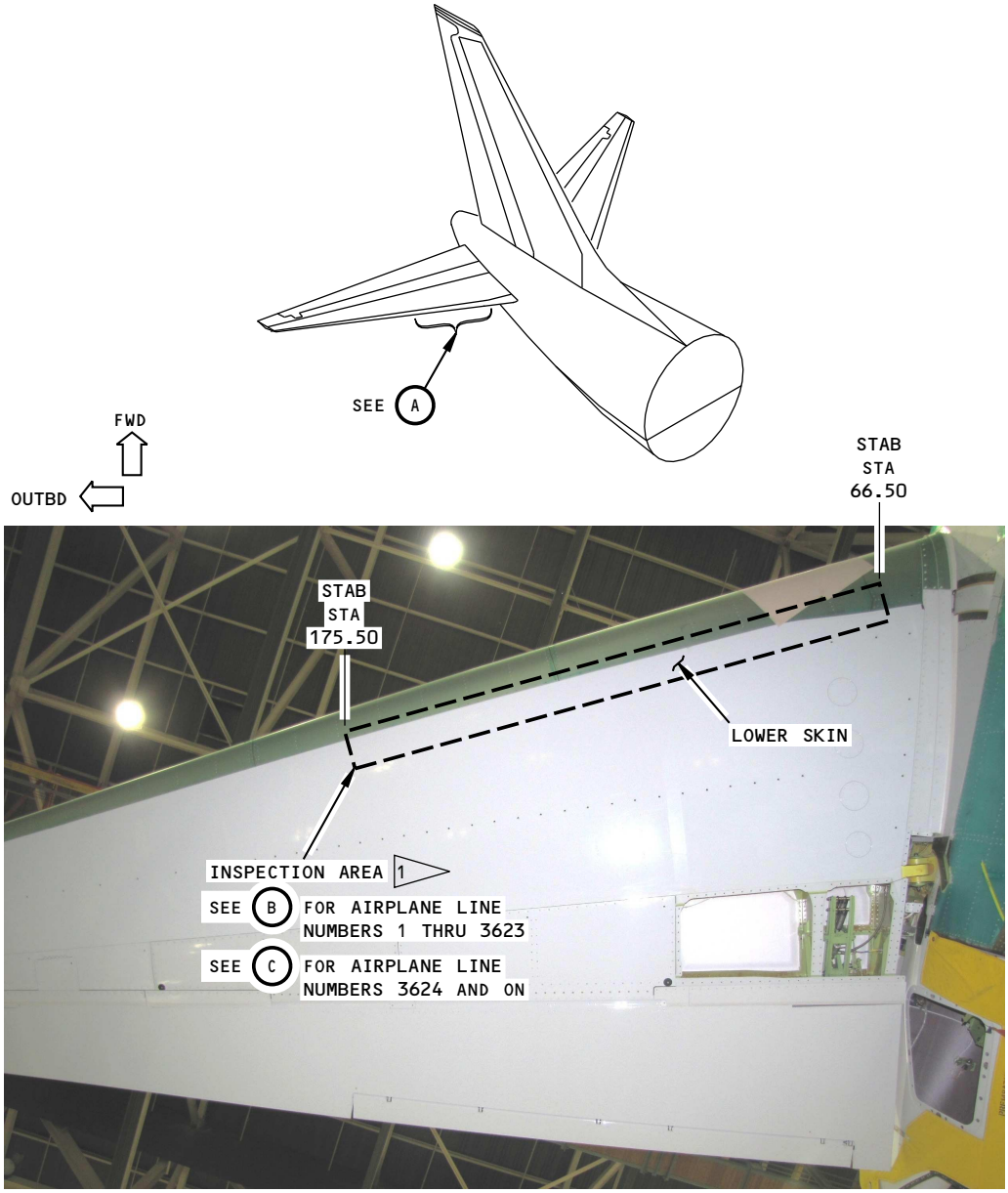

THIS IS A VIEW OF THE LOWER SKIN OF THE RIGHT HORIZONTAL STABILIZER AS YOU LOOK UP

A

NOTES

1. INSPECTION AREA ALONG THE LOWER CHORD OF THE FRONT SPAR FROM STABILIZER STATION (STAB STA) 66.5 TO 175.5.

2351867 S0000536838_V1

Inspection Area
Figure 1 (Sheet 1 of 3)

BOEING PROPRIETARY - Copyright © Unpublished Work - See title page for details

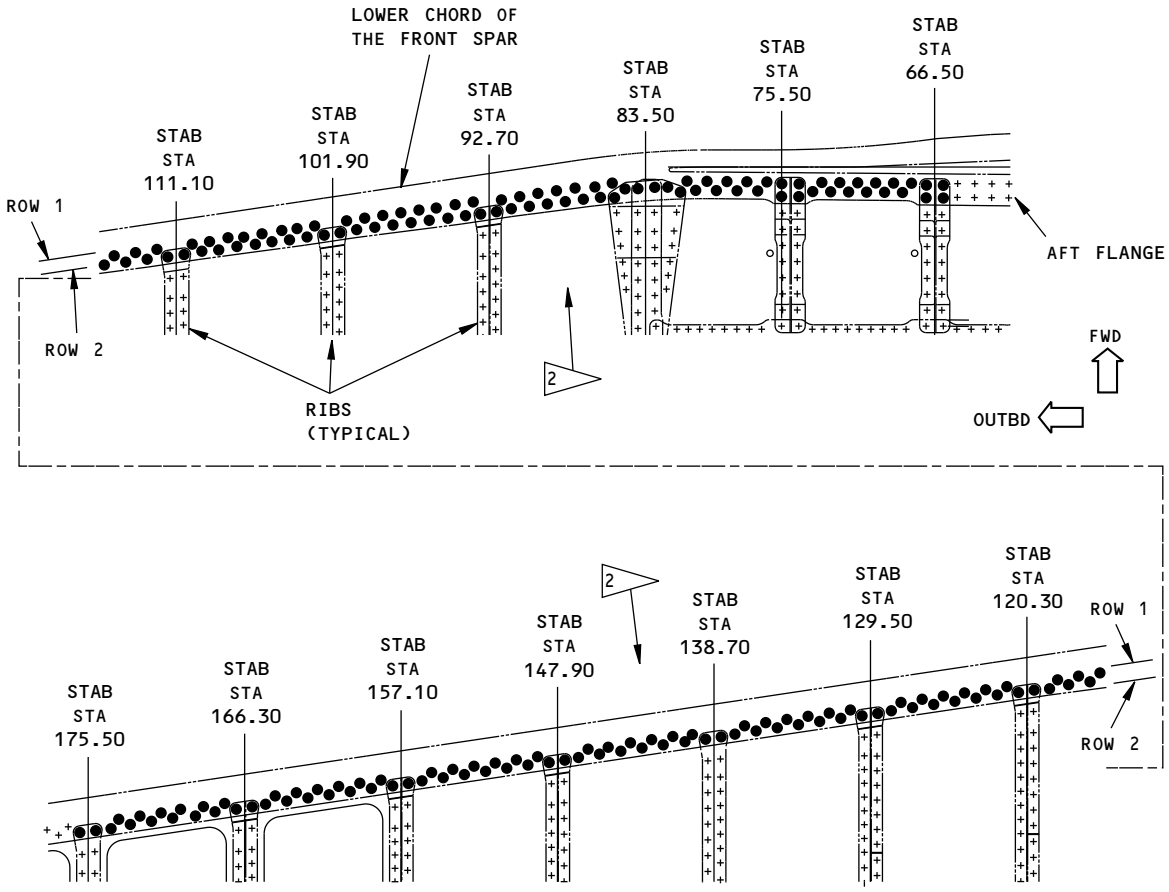

THIS IS A VIEW OF THE LOWER SKIN OF THE RIGHT HORIZONTAL STABILIZER AS YOU LOOK UP

INSPECTION AREAS ON THE LOWER SKIN OF THE HORIZONTAL STABILIZER FOR LINE NUMBERS 1 THRU 3623

B

NOTES

- ● RIVET LOCATIONS TO BE EXAMINED
- • COMPLETE THE INSPECTION ON ONE RIVET ROW BEFORE YOU DO THE INSPECTION ON THE OTHER ROW.
- 2 RIVET LOCATIONS TO BE EXAMINED ON THE LOWER CHORD OF THE FRONT SPAR WITH THE 0.37 INCH (9.4 MM) INNER DIAMETER RING PROBE. THE INSPECTION AREA FOR THESE RIVETS IS FROM STAB STA 66.5 TO 175.5

2351875 S0000536839_V1

Inspection Area
Figure 1 (Sheet 2 of 3)

BOEING PROPRIETARY - Copyright © Unpublished Work - See title page for details

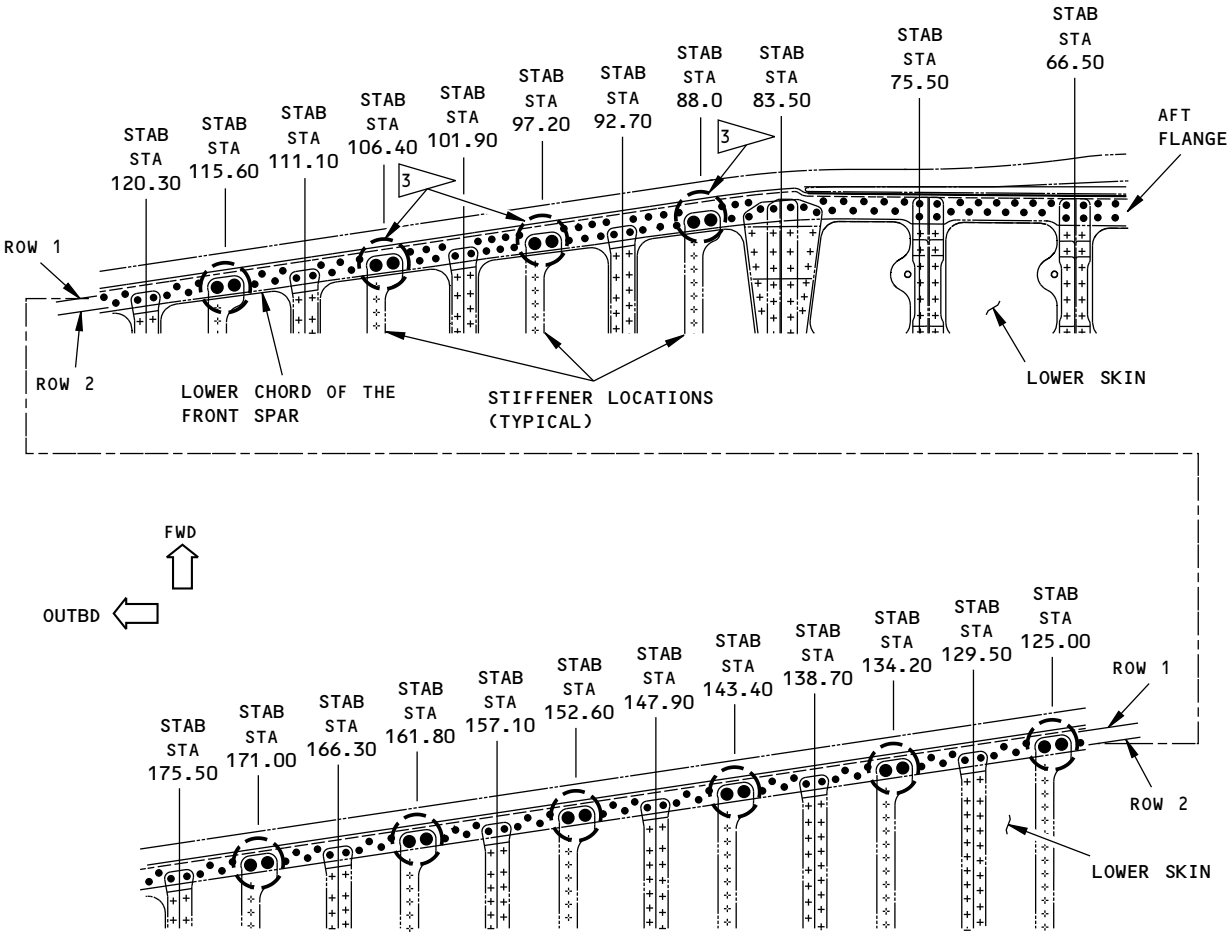

THIS IS A VIEW OF THE LOWER SKIN OF THE RIGHT HORIZONTAL STABILIZER AS YOU LOOK UP

INSPECTION AREAS ON THE LOWER SKIN OF THE HORIZONTAL STABILIZER FOR LINE NUMBERS 3624 AND ON

C

NOTES

- ● BOLT LOCATIONS TO BE EXAMINED
- • RIVET LOCATIONS TO BE EXAMINED
- • COMPLETE THE INSPECTION ON ONE RIVET ROW BEFORE YOU DO THE INSPECTION ON THE OTHER ROW.

3 BOLT LOCATIONS TO BE EXAMINED ON THE LOWER CHORD OF THE FRONT SPAR WITH A RING PROBE THAT HAS AN INNER DIAMETER BETWEEN 0.45 AND 0.50 INCH (11.4 AND 12.7 mm). SEE THE CIRCLED AREAS ABOVE FOR ALL OF THESE BOLT LOCATIONS. THESE BOLT HEADS CAN BE EASILY IDENTIFIED BECAUSE THEY ARE LARGER THAN THE ADJACENT RIVETS. THERE IS A TOTAL OF 10 STATION LOCATIONS TO BE EXAMINED WHERE THE BOLTS ARE INSTALLED.

THE RIVET LOCATIONS TO BE EXAMINED ARE SHOWN BY THE SMALLER BLACK DOTS FROM STAB STA 66.5 TO 175.5. EXAMINE THESE RIVET LOCATIONS WITH A RING PROBE THAT HAS AN INNER DIAMETER OF 0.37 TO 0.40 INCH (9.4 TO 10.0 mm).

2351898 S0000536840_V1

Inspection Area
Figure 1 (Sheet 3 of 3)

BOEING PROPRIETARY - Copyright © Unpublished Work - See title page for details

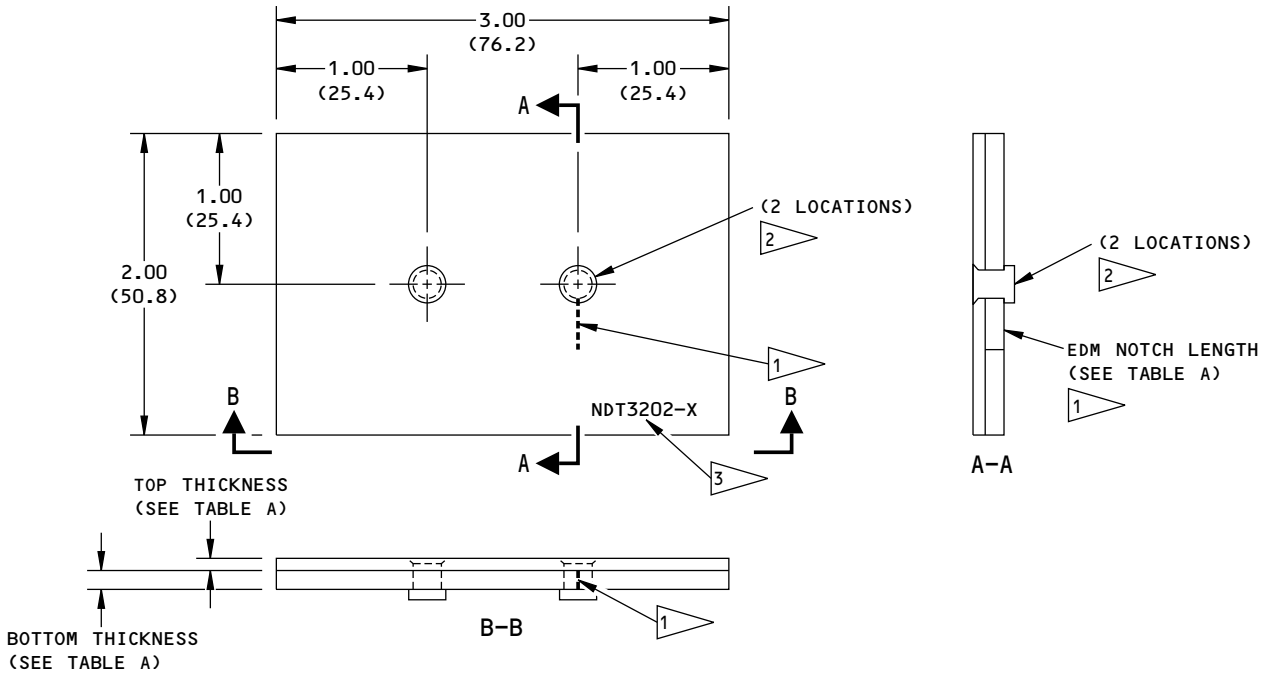

REFERENCE STANDARD NUMBER	BOTTOM THICKNESS	EDM NOTCH LENGTH	TOP THICKNESS
NDT3202-A	0.150	0.250	0.071
NDT3202-B	0.250	0.250	0.071
NDT3202-C	0.150	0.300	0.071
NDT3202-D	0.250	0.300	0.071
NDT3202-E	0.080	0.320	0.100
NDT3202-F	0.150	0.340	0.100
NDT3202-G	0.150	0.365	0.100

4

TABLE A

NOTES

- ALL DIMENSIONS ARE IN INCHES (MILLIMETERS ARE IN PARENTHESES)
- TOLERANCE (UNLESS SPECIFIED DIFFERENTLY):

INCHES	MILLIMETERS
X.XXX = ±0.005	X.XX = ±0.10
X.XX = ±0.025	X.X = ±0.50
X.X = ±0.050	X = ±1

- MATERIAL: TOP PLATE: 2024-T3 ALUMINUM (CLAD OR BARE) OR EQUIVALENT WITH A CONDUCTIVITY BETWEEN 28-32 IACS
  BOTTOM PLATE: 7150-T77511, 7055-T77511 OR 7075-T73511 ALUMINUM (CLAD OR BARE)
- SURFACE ROUGHNESS: 63 Ra OR BETTER

1 EDM NOTCH:
WIDTH: 0.010 (0.25) MAXIMUM
DEPTH: THROUGH THE THICKNESS
LENGTH: SEE TABLE A

2 FASTENERS:
USE BACR15GF6* RIVETS. ALTERNATIVE FASTENERS CAN BE USED IF THEY HAVE THE SAME CONFIGURATION AS THE BACR15GF6 RIVETS

3 ETCH OR STAMP THE REFERENCE STANDARD NUMBER, NDT3202-X, AT APPROXIMATELY THIS LOCATION

4 ONLY MAKE REFERENCE STANDARD NDT3202-G FOR THIS INSPECTION PROCEDURE

2351990 S0000536841_V1

Reference Standard NDT3202-X
Figure 2

BOEING PROPRIETARY - Copyright © Unpublished Work - See title page for details

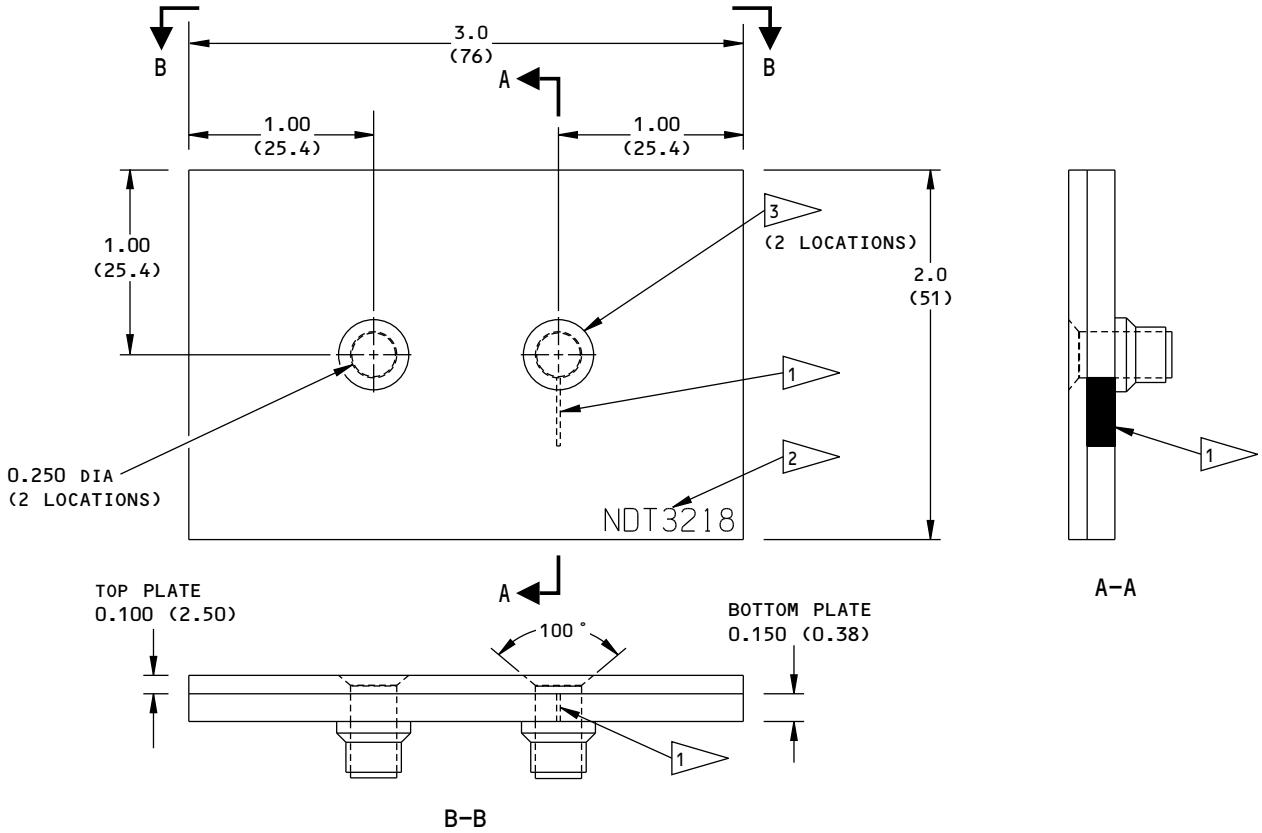

NOTES

- ALL DIMENSIONS ARE IN INCHES (MILLIMETERS ARE IN PARENTHESES)
- TOLERANCE (UNLESS SPECIFIED DIFFERENTLY):

INCHES	MILLIMETERS	ANGULAR
X.XXX = ±0.005	X.XX = ±0.10	±2 °
X.XX = ±0.025	X.X = ±0.50	
X.X = ±0.050	X = ±1	

- MATERIAL: TOP PLATE: 2024-T3 ALUMINUM (CLAD OR BARE)
  BOTTOM PLATE: 7150-T77511, 7055-T77511 OR 7075-T73511 ALUMINUM (CLAD OR BARE)
- SURFACE ROUGHNESS: 63 Ra OR BETTER

1 EDM NOTCH:
LENGTH: 0.365 (9.30)
DEPTH: 0.150 (3.80)
WIDTH: 0.020 (0.50) MAXIMUM

2 ETCH OR ENGRAVE THE REFERENCE STANDARD NUMBER, NDT3218, AT APPROXIMATELY THIS LOCATION.

3 INSTALL TWO BACB30YP8K4 BOLTS AND BACC30BL8 COLLARS

2351977 S0000536843_V1

Reference Standard NDT3218
Figure 3

BOEING PROPRIETARY - Copyright © Unpublished Work - See title page for details

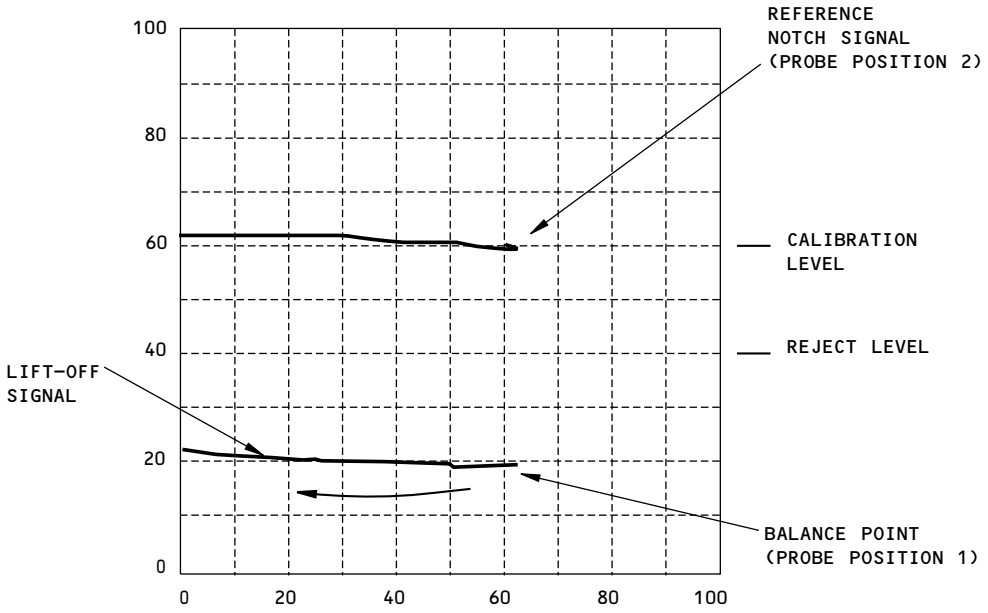

IMPEDANCE PLANE DISPLAY
DETAIL I

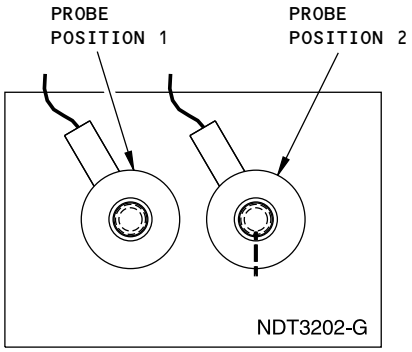

PROBE POSITIONS FOR CALIBRATION ON
REFERENCE STANDARD NDT3202-G

DETAIL II

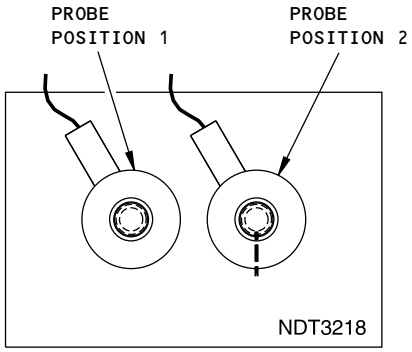

PROBE POSITIONS FOR CALIBRATION ON
REFERENCE STANDARD NDT3218

DETAIL III

2352006 S0000536844_V1

Calibration Probe Positions
Figure 4

BOEING PROPRIETARY - Copyright © Unpublished Work - See title page for details

HORIZONTAL STABILIZER - UPPER CHORD AND FRONT SPAR WEB INSPECTIONS AT THE FRONT SPAR FROM STAB STA 258.28 TO THE OUTBOARD TIP (HFEC)

1. Purpose

A. Use this high frequency eddy current (HFEC) procedure to examine the areas that follow (see Figure 1 for the inspection areas):

(1) The forward flange of the upper chord that is at the front spar of the horizontal stabilizers. The forward flange of the upper chord is examined at open fastener holes from STAB STA 258.28 to the outboard tip (STAB BL 281.81).

(2) The front spar web at the front spar of the horizontal stabilizers. The front spar web is examined at the fastener locations that go through the upper chord from STAB STA 258.28 to the outboard tip (STAB BL 281.81).

B. This procedure uses an impedance plane display instrument.

C. The upper chord and front spar web are aluminum.

D. 737 Maintenance Planning Data (MPD) Damage Tolerance Rating (DTR) Check Form Reference:

(1) Item: 55-10-06-4E

2. Equipment

A. General

(1) Use inspection equipment that can be calibrated on the reference standards as specified in paragraph 5 of Part 6, 51-00-00, Procedure 16 and Part 6, 51-00-00, Procedure 23.

(2) Refer to Part 1, 51-01-00, for data about the equipment manufacturers.

B. Instrument

(1) The instruments that follow were used to help prepare this procedure.

(a) 500D with minimite; Olympus NDT

(b) Phasec 2D/3D; GE Inspection Technologies with Hocking mini drive

(c) 2000D with minimite; Olympus NDT (Nortec)

C. Probes

(1) The probes that follow were used to help prepare this procedure.

(a) URY.187-250SS; Techna NDT

(b) TPEN95-6; Techna NDT

D. Reference Standards

(1) Use reference standard NDT1017, or an equivalent, to help calibrate the instrument to do open hole inspections. See Part 6, 51-00-00, Procedure 16, for data about reference standard NDT1017.

(2) Use reference standard 188A, or an equivalent, to help calibrate the instrument to do surface inspections around fasteners. See Part 6, 51-00-00, Procedure 23, for data about reference standard 188A.

BOEING PROPRIETARY - Copyright © Unpublished Work - See title page for details

3. **Prepare for the Inspection**

   A. Remove the leading edge skin panel between LE STA 263.30 (STAB STA 258.28) and the outboard tip. See Figure 1.

   B. Identify the forward flange of the upper chord inspection area at the front spar from STAB STA 258.28 to the outboard tip (STAB BL 281.81).

   C. Prepare the fastener holes in the forward flange of the upper chord for inspection as specified in Part 6, 51-00-00, Procedure 16, paragraph 4.

   D. Remove the cap seals, as necessary, from the heads of the fasteners that attach the front spar web to the upper chord.

   E. Remove paint only if it is loose.

4. **Instrument Calibration**

   A. Calibrate the instrument as specified in Part 6, 51-00-00, Procedure 16, paragraph 5, to look for cracks at the fastener holes on the forward flange of the upper chord of the front spar.

   B. Calibrate the instrument as specified in Part 6, 51-00-00, Procedure 23, paragraph 5, to examine the front spar web for cracks at the fasteners that go through the upper chord of the front spar.

5. **Inspection Procedure**

   A. Examine the forward flange of the upper chord at the front spar of the horizontal stabilizer for cracks at the open fastener holes from STAB STA 258.28 to the outboard tip (STAB BL 281.81) as shown in Figure 1 and as specified in Part 6, 51-00-00, Procedure 16, paragraph 6.

      NOTE: Nutplates are installed on the lower surface of the forward flange. An off-scale signal will occur if the probe coil touches a nutplate.

   B. Examine the front spar web of the front spar of the horizontal stabilizer for cracks. Do this inspection at the fasteners that go through the upper chord from STAB STA 258.28 to the outboard tip (STAB BL 281.81) as shown in Figure 1 and as specified in Part 6, 51-00-00, Procedure 23, paragraph 6.

      (1) Make a complete scan around each fastener head.

   C. Do Paragraph 5.A. and Paragraph 5.B. again to examine the front spar web and the upper chord of the opposite horizontal stabilizer.

6. **Inspection Results**

   A. A crack signal from the open hole inspection will look almost the same as the notch signal from the reference standard.

      (1) Record the location of all crack indications.

      (2) Refer to Part 6, 51-00-00, Procedure 16, paragraph 7, for instructions to help make an analysis of the indications that occur during the inspection.

   B. A crack signal from the surface inspection will look almost the same as the notch signal from the reference standard.

      (1) Refer to Part 6, 51-00-00, Procedure 23, paragraph 7, for instructions to help make an analysis of the indications that occur during the inspection.

BOEING PROPRIETARY - Copyright © Unpublished Work - See title page for details

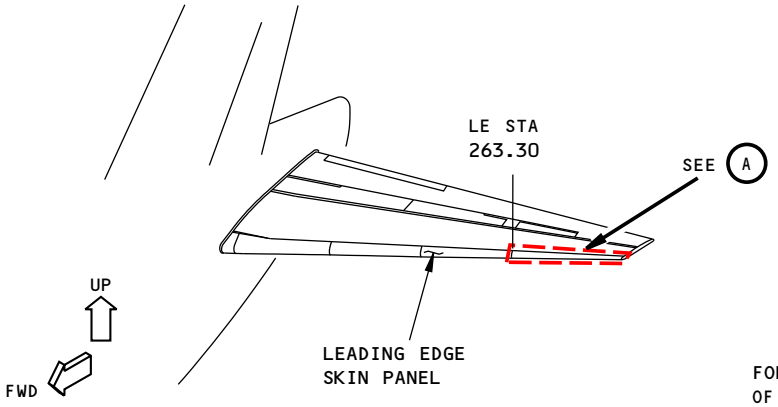

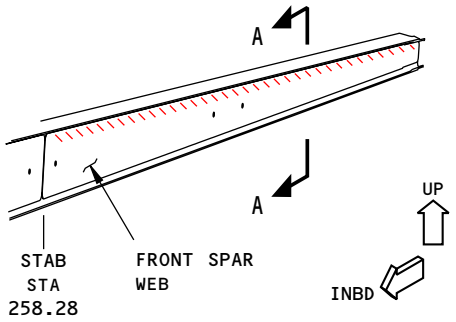

FRONT SPAR OF THE HORIZONTAL STABILIZER
(THE LEFT SIDE IS SHOWN;
THE RIGHT SIDE IS OPPOSITE)

A

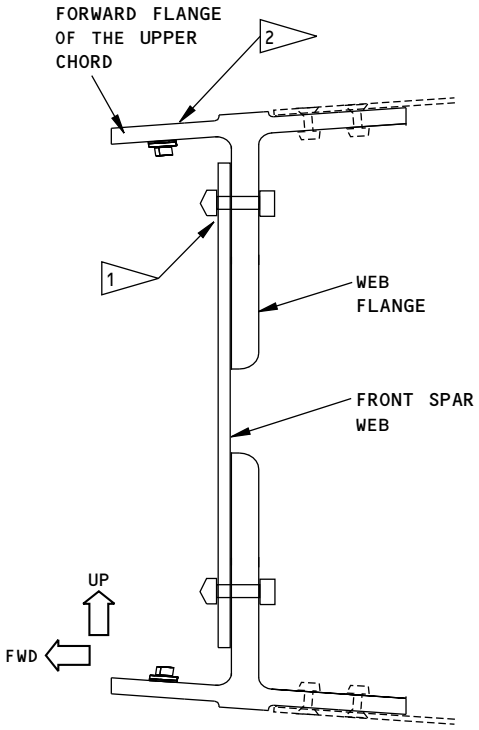

FRONT SPAR
A–A

NOTES

INSPECTION AREA: STAB STA 258.28 TO THE OUTBOARD TIP

1 MAKE A SCAN ON THE FRONT SPAR WEB AROUND EACH FASTENER THAT GOES THROUGH THE UPPER SPAR CHORD FROM STAB STA 258.28 TO THE OUTBOARD TIP.

2 DO OPEN HOLE INSPECTIONS AT ALL FASTENER LOCATIONS ON THE FORWARD FLANGE OF THE UPPER CHORD FROM STAB STA 258.28 TO THE OUTBOARD TIP.

2380222 S0000545971_V1

Inspection Area
Figure 1

BOEING PROPRIETARY - Copyright © Unpublished Work - See title page for details

PART 6 - EDDY CURRENT

HORIZONTAL STABILIZER - AFT FLANGE OF THE LOWER CHORD AT THE REAR SPAR (STAB STA 310.54 TO THE OUTBOARD TIP)(LFEC)

1. Purpose

A. Use this low frequency eddy current (LFEC) procedure to examine the aft flange of the lower chord at the rear spar of the horizontal stabilizer for cracks. The lower chord is examined from STAB STA 310.54 to the outboard tip for subsurface cracks that can start at the fastener holes. See Figure 1 for the inspection areas.

B. This procedure uses an impedance plane display instrument.

C. The lower chord is aluminum.

D. 737 Maintenance Planning Data (MPD) Damage Tolerance Rating (DTR) Check Form Reference:

(1) Item: 55-10-04-7

2. Equipment

A. General

(1) Use inspection equipment that can be calibrated on the reference standard.

(2) Refer to Part 1, 51-01-00, for data about the equipment manufacturers.

B. Instrument

(1) Use an eddy current instrument that has an impedance plane display.

(2) The instruments that follow were used to help prepare this procedure.

(a) 500D; Olympus NDT

(b) Phasec 2D/3D; GE Inspection Technologies

C. Probes

(1) Use a reflection spot probe with a maximum outside diameter of 0.25 inch (6.4 mm) that can operate between 1 and 20 kHz.

(2) The spot probe that follows was used to help prepare this procedure.

(a) NEC-1087; NDT Engineering

D. Reference Standards

(1) Make reference standards NDT3191 and NDT3208-C. See Figure 2 and Figure 3 for data about these reference standards.

E. Special Tools

(1) Use a nonconductive straightedge as a probe guide when you do this procedure.

3. Prepare for the inspection

A. Identify the inspection areas shown in Figure 1.

B. Identify the rib that starts at STAB STA 310.

C. Identify the fastener locations in Inspection Area 1 as shown in Figure 1.

D. Identify the fastener locations in Inspection Area 2 as shown in Figure 1.

BOEING PROPRIETARY - Copyright © Unpublished Work - See title page for details

E. Clean the inspection areas.

CAUTION: REFER TO THE APPLICABLE AIRCRAFT MAINTENANCE MANUAL (AMM) SUBJECT FOR INSTRUCTIONS TO REMOVE PAINT FROM CARBON FIBER COMPOSITE PANELS.

F. Remove paint, as necessary, to see the fastener heads.

G. Do a check of the Inspection Area 1 fasteners to identify if they are magnetic.

NOTE: A magnet can be used to identify if the fasteners are magnetic.

4. Instrument Calibration

A. Calibrate the instrument to examine the fastener locations in Inspection Area 1 as follows:

(1) Set the instrument frequency between 10 and 20 kHz.

(2) Put the spot probe on reference standard NDT3208-C adjacent to the fastener at position 1 or position 3, as applicable, as follows (see Figure 4):

(a) Put the spot probe on the carbon fiber side of the reference standard.

(b) Put the spot probe at position 1 if the fasteners to be examined are magnetic.

(c) Put the spot probe at position 3 if the fasteners to be examined are not magnetic.

(3) Balance the instrument.

(4) Adjust the vertical to horizontal gain to put it between 2:1 and 4:1.

(5) Adjust the lift-off signal to move horizontally from right to left.

(6) Set the balance point at 20% of full screen height (FSH) and 80% of full screen width (FSW).

(7) Move the spot probe above the reference standard notch, adjacent to the fastener at position 2 or position 4, as applicable, as follows (see Figure 4).

(a) Put the spot probe at position 2 if the fasteners to be examined are magnetic.

(b) Put the spot probe at position 4 if the fasteners to be examined are not magnetic.

(8) Adjust the instrument gain to get the signal from the notch to be 60% of FSH.

B. Calibrate the instrument to examine the fastener locations in Inspection Area 2 as follows:

NOTE: Use reference standard NDT3191 to calibrate the instrument to examine the fastener locations on the elevator closure panel.

(1) Set the instrument frequency between 1 and 3 kHz.

(2) Put the spot probe on reference standard NDT3191, adjacent to the fastener without the notch at probe position 1. See Figure 5.

(3) Balance the instrument.

(4) Adjust the vertical to horizontal gain to be between 2:1 and 4:1.

(5) Adjust the lift-off signal to move horizontally from right to left.

(6) Set the balance point at 20% of FSH and 80% of FSW.

(7) Move the probe to probe position 2 as shown in Figure 5.

(8) Adjust the instrument gain to get the signal from the notch to be 60% of FSH.

5. Inspection Procedure

A. Examine the lower chord for cracks at all of the fastener locations in Inspection Area 1 as follows:

BOEING PROPRIETARY - Copyright © Unpublished Work - See title page for details

(1) Calibrate the instrument as specified in Paragraph 4.A.

(2) Put a nonconductive straightedge on the aft side of the fasteners in Inspection Area 1. Make sure that the nonconductive straightedge is parallel to the forward edge of the trailing edge panel.

NOTE: The nonconductive straightedge will be used as a probe guide.

(3) Put the probe on the inspection surface adjacent to the aft side of the fastener head and against the nonconductive straightedge.

(4) Balance the instrument.

(5) Make a scan along the aft side of the fasteners. During the scan:

(a) Monitor the screen display. If the balance point moves one division above or below the calibration balance point, balance the instrument again and continue to examine the other fastener locations.

(b) Examine 22 fastener locations. One fastener is hidden below the trailing edge panel and cannot be seen. See Figure 1, Detail I, for the location of the hidden fastener.

B. Examine the lower chord for cracks at all of the fastener locations in Inspection Area 2 as follows:

(1) Calibrate the instrument as specified in Paragraph 4.B.

(2) Put a nonconductive straightedge adjacent to the aft side of the fasteners that you can see in Inspection Areas 1 and 2. Make sure that the nonconductive straightedge is parallel to the forward edge of the elevator closure panel.

NOTE: The nonconductive straightedge will be used as a probe guide.

(3) Put the probe on the inspection surface adjacent to the aft side of the fastener head that can be seen and against the nonconductive straightedge.

(4) Balance the instrument with the probe adjacent to the fastener head that can be seen in Inspection Area 2.

(5) Monitor the screen display and make a scan along the aft side of the fasteners.

NOTE: There are three fastener locations to be examined: two fasteners are hidden below the elevator closure panel and cannot be seen from the surface. See Figure 1, Detail I, for the location of the hidden fasteners.

C. Do Paragraph 5.A. and Paragraph 5.B. again to examine the inspection areas on the opposite horizontal stabilizer.

6. Inspection Results

A. Signals that are 40% (or more) of full screen height are indications of cracks.

B. Compare the signals that occur during the inspection to the signals you got from the reference standard.

C. Compare the signals that occur during the inspection to the signals you got from the same fastener location on the opposite side of the airplane.

D. To make sure a crack signal is from a crack, do an open hole eddy current inspection as specified in Part 6, 51-00-00, Procedure 16, at the fastener locations that cause crack signals to occur.

BOEING PROPRIETARY - Copyright © Unpublished Work - See title page for details

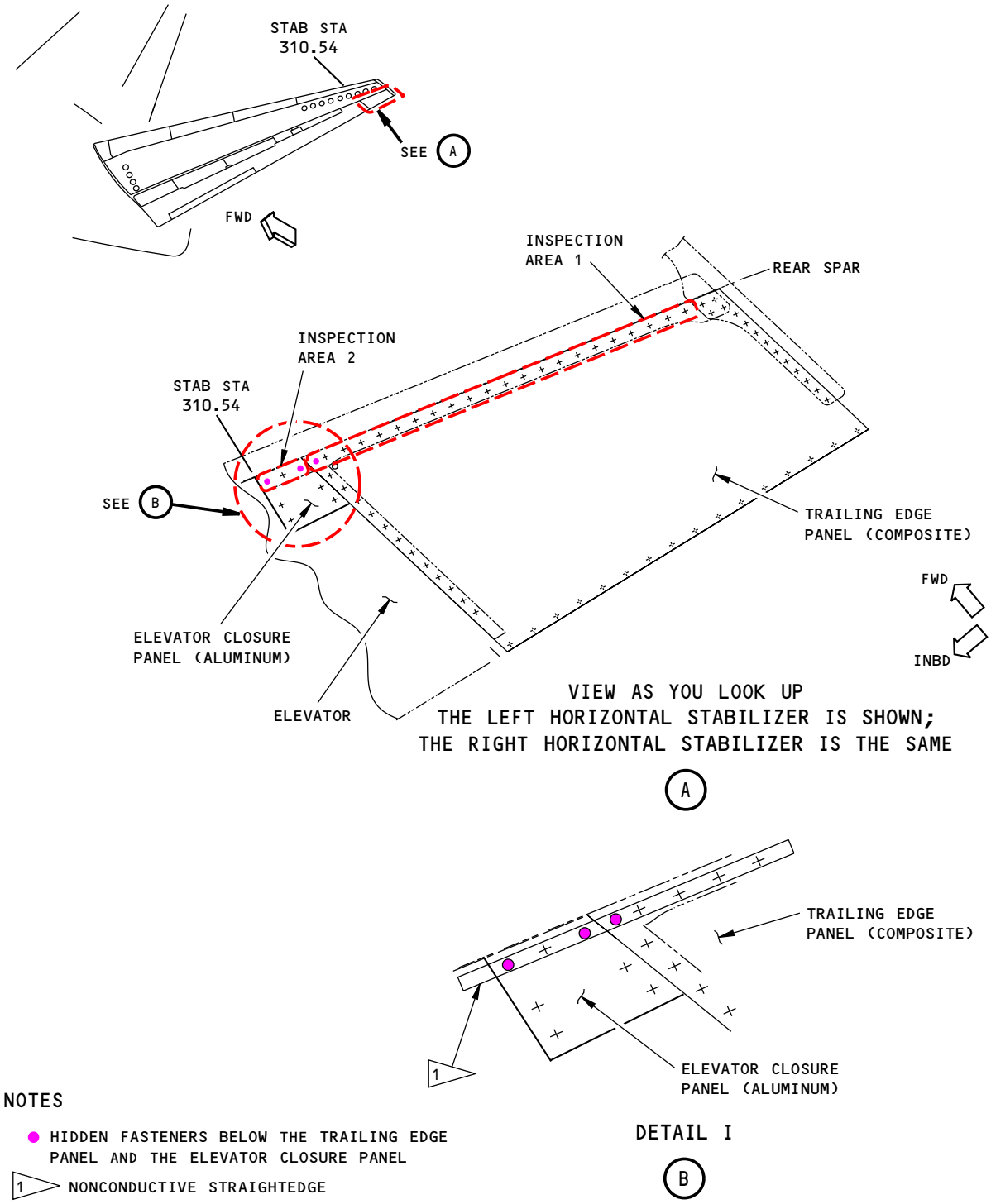

NOTES

- HIDDEN FASTENERS BELOW THE TRAILING EDGE PANEL AND THE ELEVATOR CLOSURE PANEL

1 NONCONDUCTIVE STRAIGHTEDGE

2380237 S0000545988_V2

Inspection Area
Figure 1

BOEING PROPRIETARY - Copyright © Unpublished Work - See title page for details

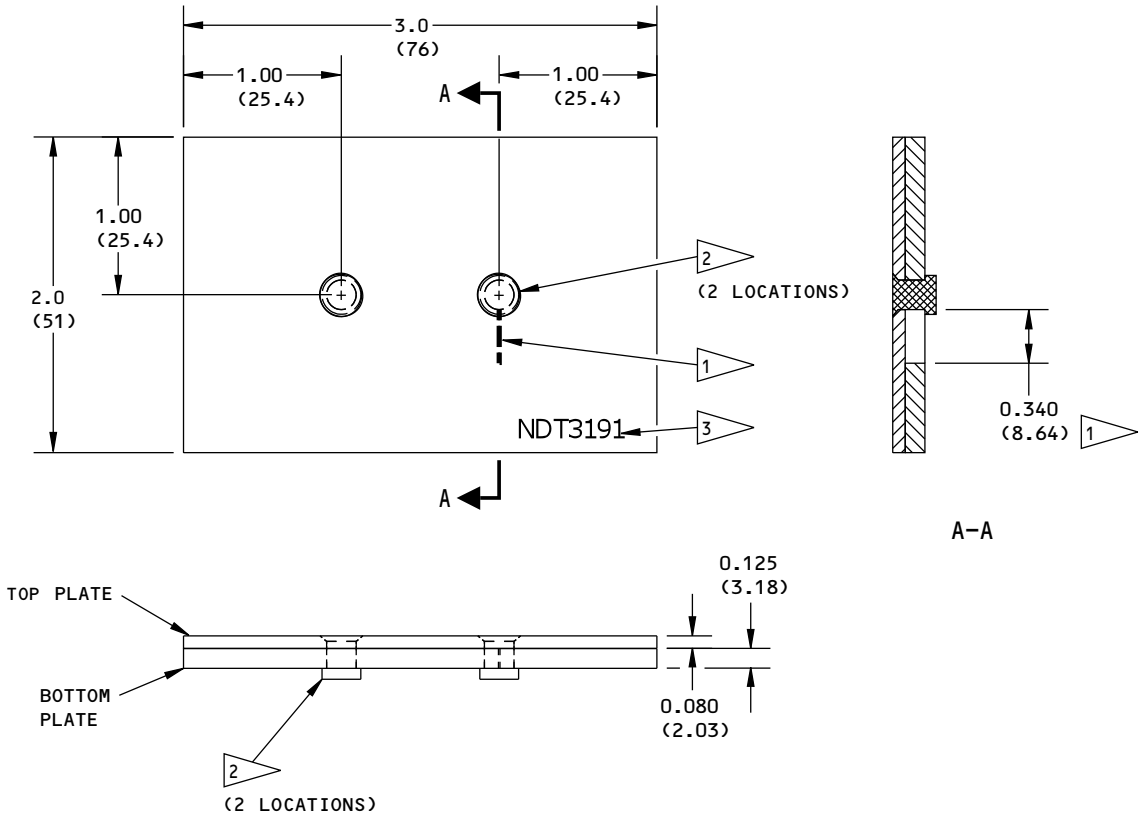

NOTES

- ALL DIMENSIONS ARE IN INCHES (MILLIMETERS ARE IN PARENTHESES)
- TOLERANCE (UNLESS SPECIFIED DIFFERENTLY):

INCHES	MILLIMETERS
X.XXX = ±0.005	X.XX = ±0.10
X.XX = ±0.025	X.X = ±0.5
X.X = ±0.050	X = ±1

- MATERIAL: TOP PLATE: 2024-T3 ALUMINUM (CLAD OR BARE), OR EQUIVALENT, WITH A CONDUCTIVITY BETWEEN 28-32 IACS
  BOTTOM PLATE: 7150-T77511 ALUMINUM (CLAD OR BARE), OR EQUIVALENT, WITH A CONDUCTIVITY BETWEEN 35-39 IACS
- SURFACE ROUGHNESS: 63 Ra OR BETTER

1 EDM NOTCH:
WIDTH: 0.010 (0.25) MAXIMUM
DEPTH: THROUGH THE THICKNESS
LENGTH: 0.340 (8.64)

2 FASTENERS:
USE BACR15GF6* RIVETS

ALTERNATIVE FASTENERS CAN BE USED IF THEY HAVE THE SAME CONFIGURATION AS THE FASTENERS SPECIFIED

3 ETCH OR STAMP THE REFERENCE STANDARD NUMBER, NDT3191, AT APPROXIMATELY THIS LOCATION

2380252 S0000545989_V1

Reference Standard NDT3191
Figure 2

BOEING PROPRIETARY - Copyright © Unpublished Work - See title page for details

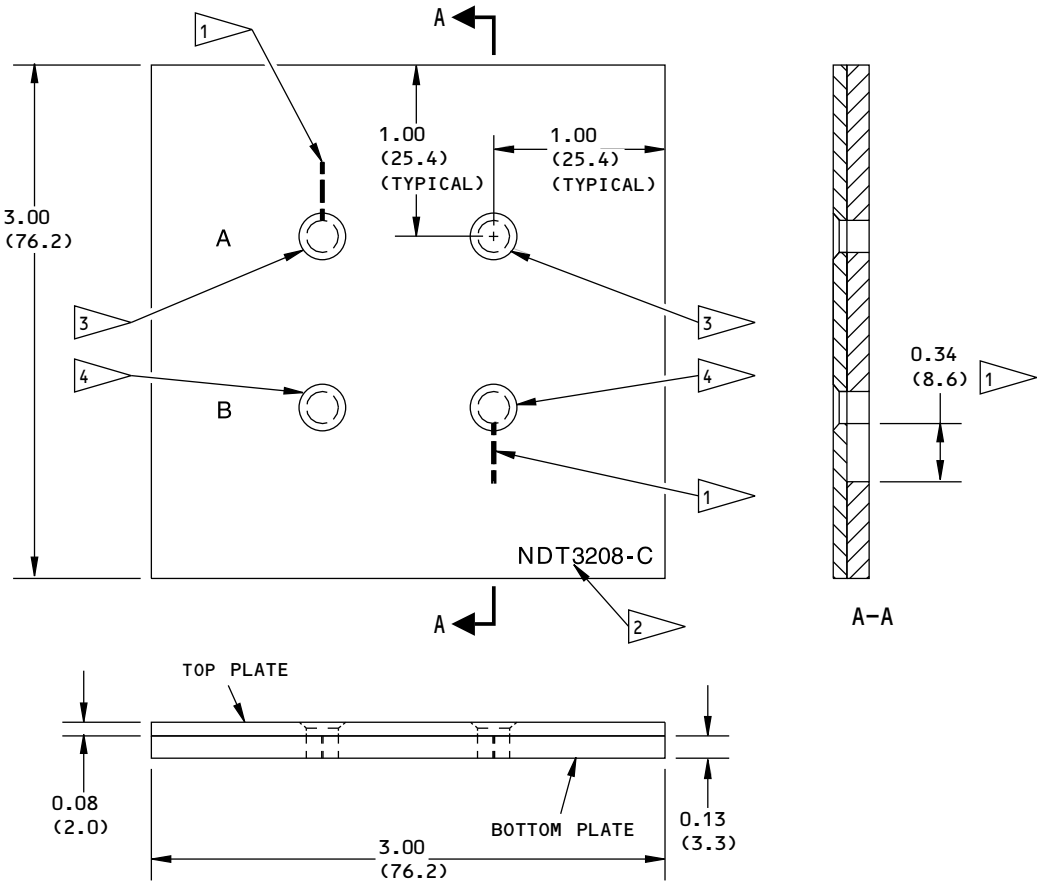

NOTES

- ALL DIMENSIONS ARE IN INCHES (MILLIMETERS ARE IN PARENTHESES)
- TOLERANCE (UNLESS SPECIFIED DIFFERENTLY):

INCHES	MILLIMETERS
X.XXX = ±0.005	X.XX = ±0.10
X.XX = ±0.025	X.X = ±0.5
X.X = ±0.050	X = ±1

- MATERIAL: TOP PLATE: BMS 8-168, TYPE II, CLASS I, GRADE 145 OR EQUIVALENT
  BOTTOM PLATE: 7150-T77511/2024-T3/7075-T3 ALUMINUM OR EQUIVALENT AIRCRAFT GRADE ALUMINUM.

1. EDM NOTCH: 0.34 (8.6) LONG X 0.007 (0.18) WIDE (±0.002 (±0.05)); THROUGH THE THICKNESS
2. ETCH OR STAMP THE REFERENCE STANDARD NUMBER, NDT3208-C, AT APPROXIMATELY THIS LOCATION.
3. GROUP A (MAGNETIC) FASTENERS: USE BACR15FP* RIVETS (SEE 5) WITH THE CHARACTERISTICS THAT FOLLOW:
   SLEEVE: MONEL QQ-N-281;
   STEM: A286 CRES;
   DIAMETER: 0.156 (3.96)
4. GROUP B (NOT MAGNETIC) FASTENER: USE BACR15GF5*. SEE 5.
5. FASTENERS: ALTERNATIVE FASTENERS CAN BE USED IF THEY HAVE THE SAME CONFIGURATION AND MAGNETIC CHARACTERISTICS AS THE FASTENERS SPECIFIED.

2380288 S0000545991_V1

Reference Standard NDT3208-C
Figure 3

BOEING PROPRIETARY - Copyright © Unpublished Work - See title page for details

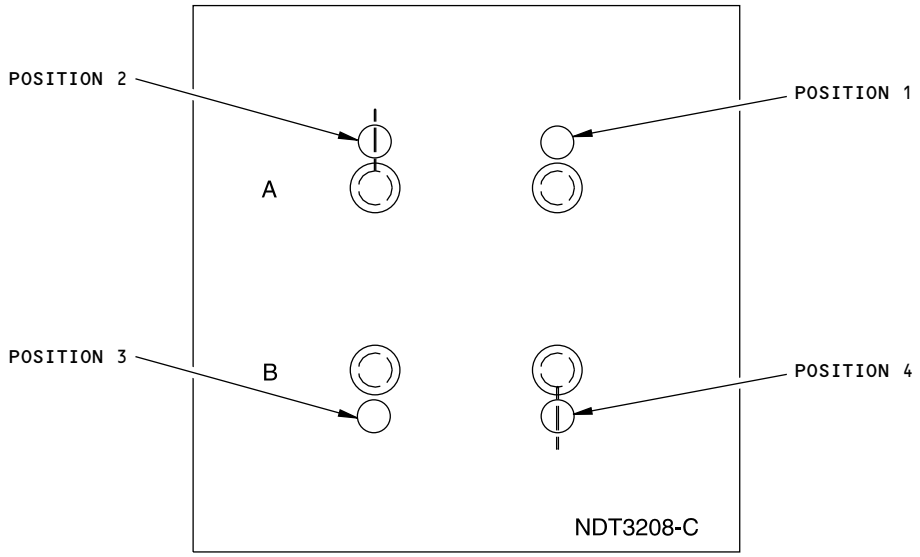

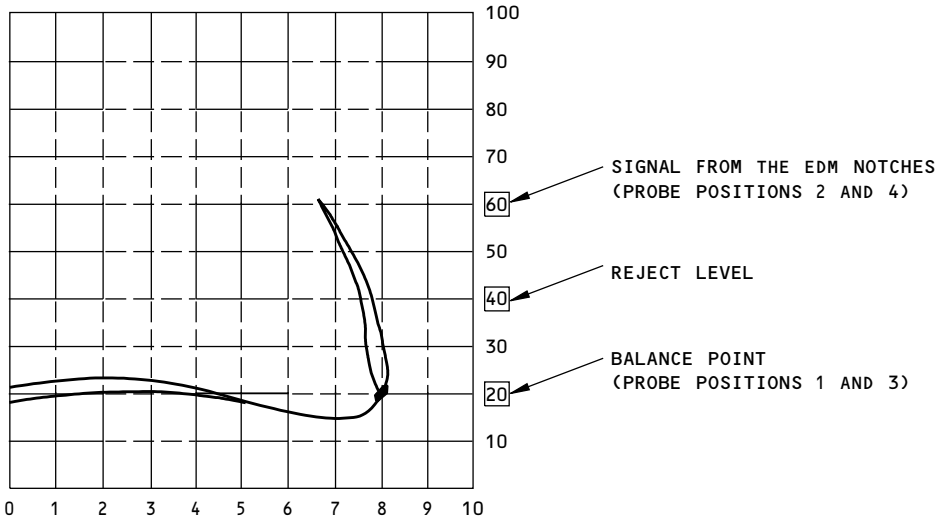

NOTES

- THE "A" ROW OF FASTENERS ARE MAGNETIC.
- THE "B" ROW OF FASTENERS ARE NOT MAGNETIC.

2380306 S0000545992_V1

Inspection Area 1 Calibration
Figure 4

BOEING PROPRIETARY - Copyright © Unpublished Work - See title page for details

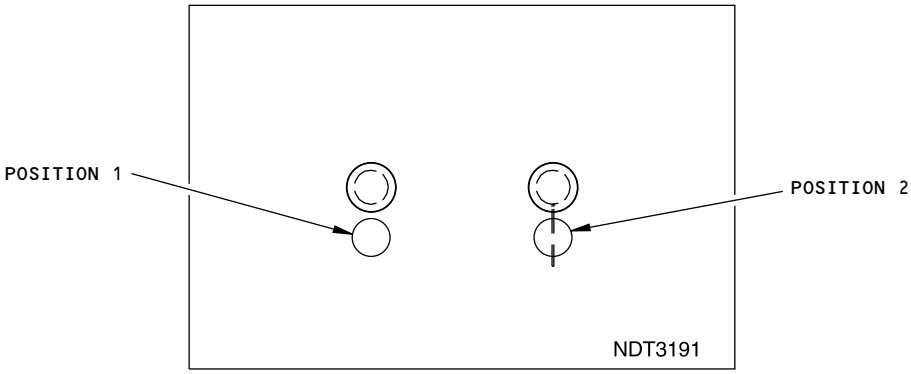

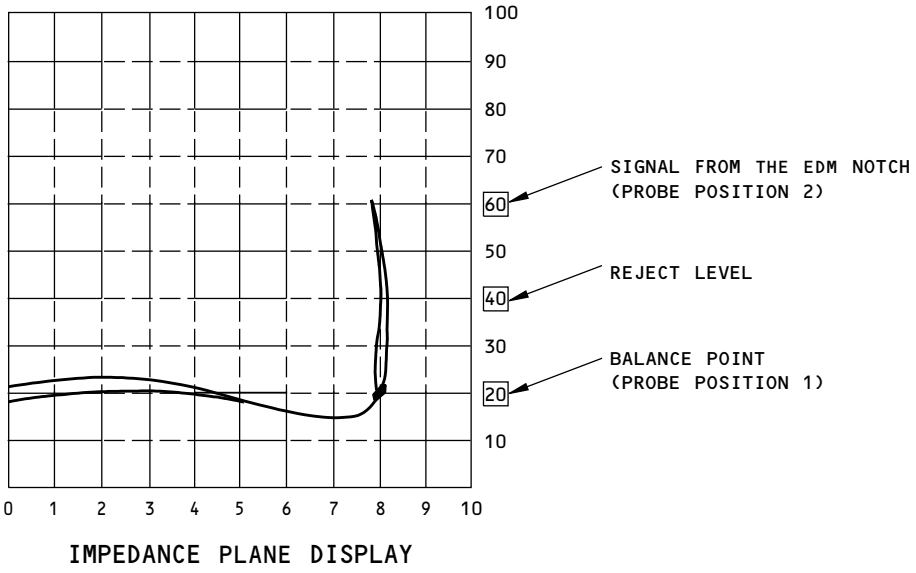

2380312 S0000545993_V1

Inspection Area 2 Calibration
Figure 5

BOEING PROPRIETARY - Copyright © Unpublished Work - See title page for details

PART 6 - EDDY CURRENT

HORIZONTAL STABILIZER - FORWARD FLANGE OF THE LOWER CHORD AT THE REAR SPAR (STAB STA 310.54 TO STAB BL 281.81)(LFEC)

1. Purpose

A. Use this low frequency eddy current (LFEC) procedure to examine the forward flange of the lower chord at the rear spar of the horizontal stabilizer for cracks. The lower chord is examined from STAB STA 310.54 to STAB BL 281.81 for subsurface cracks that can start at the fastener holes. See Figure 1 for the inspection area.

B. This procedure uses an impedance plane display instrument.

C. The lower chord is aluminum.

D. 737 Maintenance Planning Data (MPD) Damage Tolerance Rating (DTR) Check Form Reference:

(1) Item: 55-10-04-6

2. Equipment

A. Purpose

(1) Use inspection equipment that can be calibrated on the reference standard as specified in Paragraph 4.

(2) Refer to Part 1, 51-01-00, for data about the equipment manufacturers.

B. Instrument

(1) Use an eddy current instrument that has an impedance plane display.

(2) The instruments that follow were used to help prepare this procedure.

(a) 500D; Olympus NDT

(b) Phasec 2D/3D; GE Inspection Technologies

C. Probes

(1) Use a reflection ring probe that has a minimum inner diameter of 0.35 inch (8.9 mm), a maximum outer diameter of 0.60 inch (15.2 mm), and can operate between 1 and 5 kHz.

(2) The probe that follows was used to help prepare this procedure.

(a) TEK-4066; Techna NDT

D. Reference Standard

(1) Make or buy reference standard NDT3202-F as shown in Figure 2.

3. Prepare for the inspection

A. Identify the inspection area shown in Figure 1.

(1) Identify the forward flange of the lower chord at the rear spar.

(2) Identify the rib that starts at STAB STA 310.54.

B. Clean the inspection area.

C. Remove paint as necessary to see the fastener heads.

BOEING PROPRIETARY - Copyright © Unpublished Work - See title page for details

4. **Instrument Calibration**

   A. Set the instrument frequency between 1 and 2 kHz.

   B. Calibrate the instrument as specified in Part 6, 51-00-00, Procedure 9, paragraph 5.

5. **Inspection Procedure**

   A. Examine the forward flange of the lower chord at the rear spar of the horizontal stabilizer for cracks from STAB STA 310.54 to STAB BL 281.81 as specified in Part 6, 51-00-00, Procedure 9, paragraph 6, and the steps that follow.

      (1) Examine the forward row of fasteners.

      (2) Examine the aft row of fasteners.

   B. Do Paragraph 5.A. again to examine the lower chord for cracks on the opposite horizontal stabilizer.

6. **Inspection Results**

   A. Refer to Part 6, 51-00-00, Procedure 9, paragraph 7, for instructions to help make an analysis of the signals that occur during the inspection.

   B. Compare the signals that occur during the inspection to the signals you get from the reference standard.

   C. Compare the signals that occur during the inspection to the signals you get from the same fastener location on the opposite side of the airplane.

   D. To make sure a crack signal is from a crack, do an open hole eddy current inspection as specified in Part 6, 51-00-00, Procedure 16, at the fastener locations that cause the crack signals to occur.

BOEING PROPRIETARY - Copyright © Unpublished Work - See title page for details

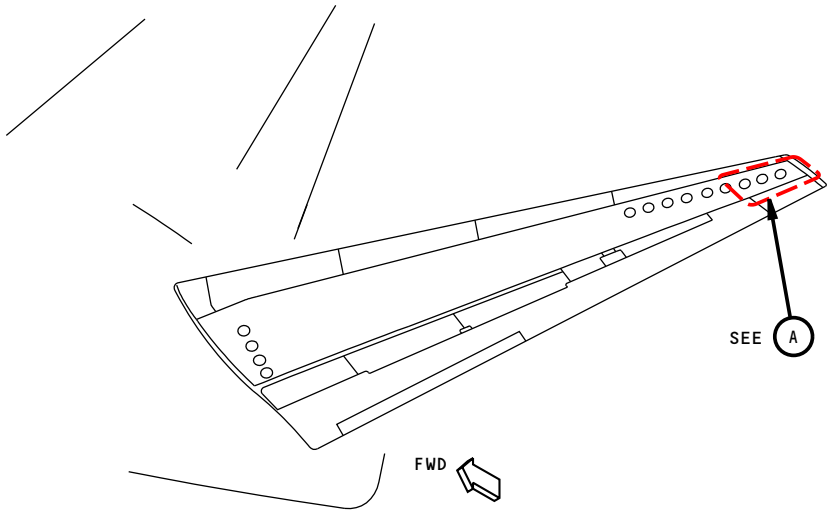

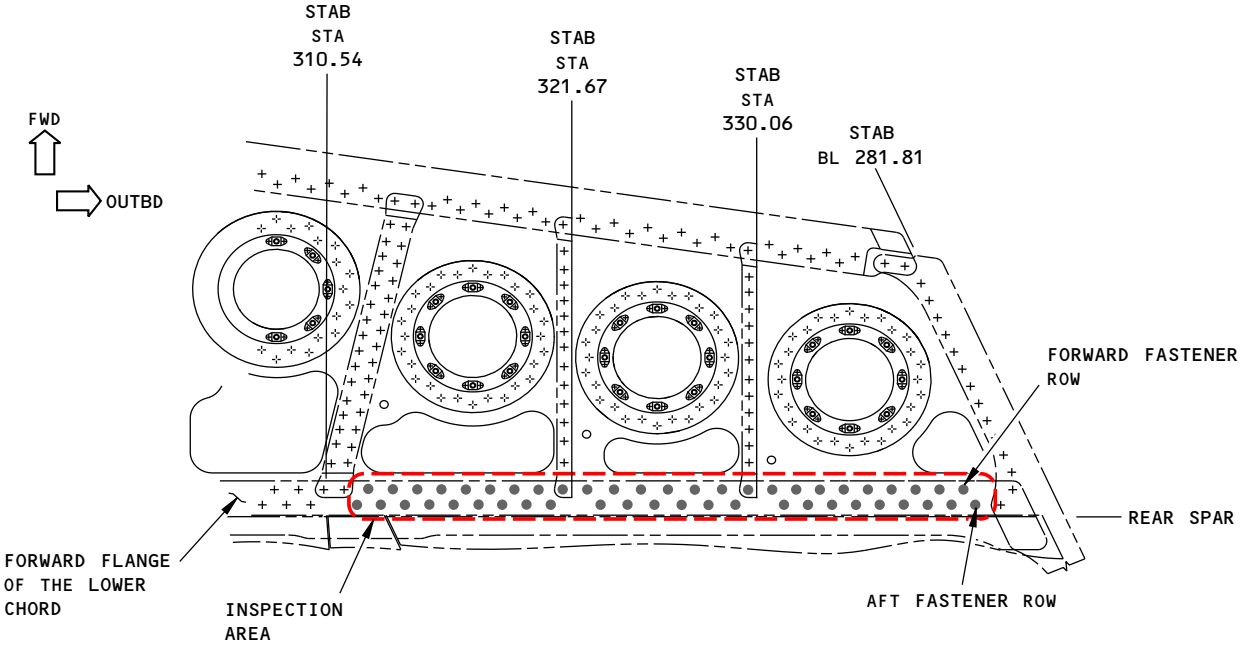

VIEW AS YOU LOOK UP
THE LEFT HORIZONTAL STABILIZER IS SHOWN;
THE RIGHT HORIZONTAL STABILIZER IS THE SAME

A

2380406 S0000546005_V1

Inspection Area
Figure 1

BOEING PROPRIETARY - Copyright © Unpublished Work - See title page for details

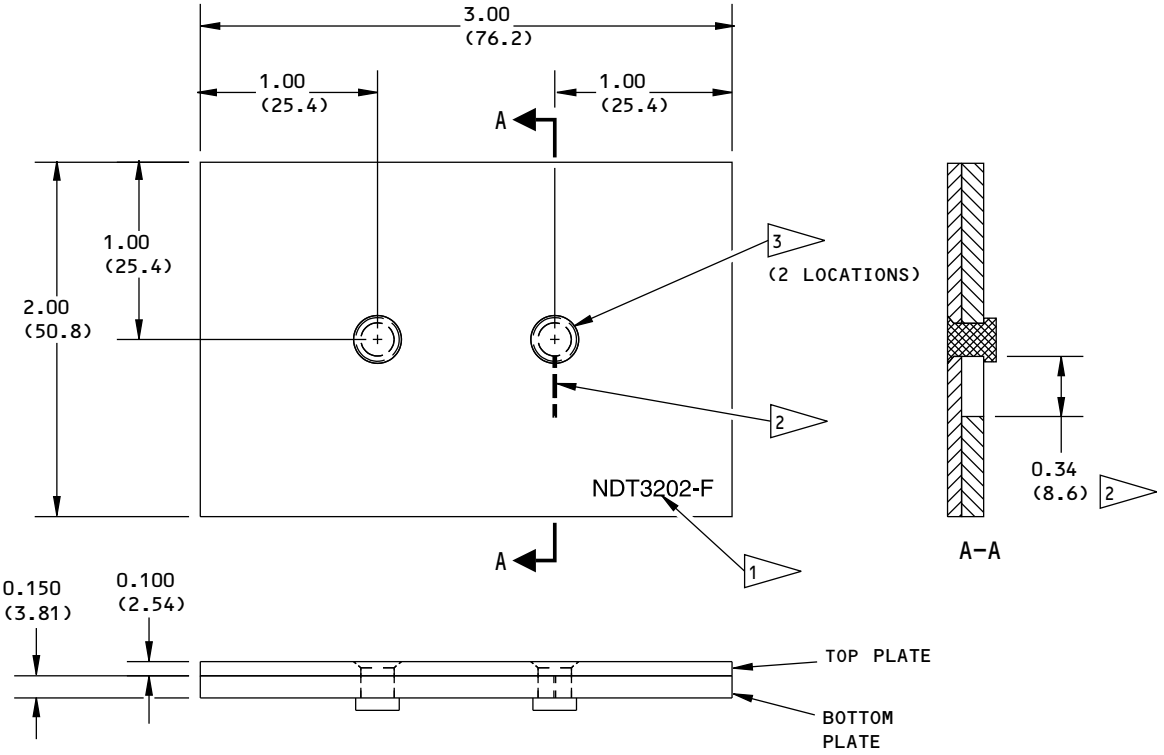

NOTES

- ALL DIMENSIONS ARE IN INCHES (MILLIMETERS ARE IN PARENTHESES)
- TOLERANCE (UNLESS SPECIFIED DIFFERENTLY):

INCHES	MILLIMETERS
X.XXX = ±0.005	X.XX = ±0.10
X.XX = ±0.025	X.X = ±0.5
X.X = ±0.050	X = ±1

- MATERIAL: TOP PLATE: 2024-T3 ALUMINUM (CLAD OR BARE), OR EQUIVALENT, WITH A CONDUCTIVITY BETWEEN 28-32 IACS
  BOTTOM PLATE: 7150-T77511 ALUMINUM (CLAD OR BARE), OR EQUIVALENT, WITH A CONDUCTIVITY BETWEEN 35-39 IACS
- SURFACE ROUGHNESS: 63 Ra OR BETTER

1 ETCH OR STAMP THE REFERENCE STANDARD NUMBER, NDT3202-F, AT APPROXIMATELY THIS LOCATION

2 EDM NOTCH:
WIDTH: 0.010 (0.25) MAXIMUM
DEPTH: THROUGH THE THICKNESS
LENGTH: 0.34 (8.6)

3 FASTENERS:
USE BACR15GF6* RIVETS. (ALTERNATIVE FASTENERS CAN BE USED IF THEY HAVE THE SAME CONFIGURATION AS THE BACR15GF6* RIVETS)

2380421 S0000546006_V1

Reference Standard NDT3202-F
Figure 2

BOEING PROPRIETARY - Copyright © Unpublished Work - See title page for details

PART 6 - EDDY CURRENT

HORIZONTAL STABILIZER - AFT FLANGE OF THE LOWER CHORD AT THE FRONT SPAR (STAB STA 66.5 TO STAB BL 281)(LFEC)

1. Purpose

A. Use this low frequency eddy current (LFEC) procedure to examine the aft flange of the lower chord at the front spar of the horizontal stabilizer for subsurface cracks. The lower chord is examined from STAB STA 66.5 to STAB BL 281.81 for subsurface cracks that can start at the fastener holes. See Figure 1 for the inspection area.

B. This procedure uses an impedance plane display instrument.

C. The lower chord and lower skin are aluminum.

D. 737 Maintenance Planning Data (MPD) Damage Tolerance Rating (DTR) Check Form Reference:

(1) Item: 55-10-06-6B

(2) Item: 55-10-06-7B

(3) Item: 55-10-06-8B

2. Equipment

A. General

(1) Use inspection equipment that can be calibrated on the reference standard as specified in Paragraph 4.

(2) Refer to Part 1, 51-01-00, for data about the equipment manufacturers.

B. Instrument

(1) Use an eddy current instrument that has an impedance plane display.

(2) The instruments that follow were used to help prepare this procedure.

(a) 500D; Olympus NDT

(b) Phasec 2D/3D; GE Inspection Technologies

C. Probes

(1) Use a reflection ring probe with a minimum inner diameter of 0.35 inch (8.9 mm), a maximum outside diameter of 0.60 inch (15.2 mm), that can operate between 1 and 5 kHz.

(2) The probe that follows was used to help prepare this procedure.

(a) TEK-4066; Techna NDT

D. Reference Standard

(1) Make reference standard NDT3202-E as shown in Figure 2.

3. Prepare for the Inspection

A. Identify the inspection area shown in Figure 1.

(1) Identify the aft flange of the lower chord at the front spar of the horizontal stabilizer.

(2) Identify the rib location that starts at STAB STA 66.5.

B. Clean the inspection area.

BOEING PROPRIETARY - Copyright © Unpublished Work - See title page for details

(1) Remove paint as necessary to see the fastener heads.

4. Instrument Calibration

A. Set the instrument frequency between 1.0 and 2.0 kHz.

B. Calibrate the instrument as specified in Part 6, 51-00-00, Procedure 9, paragraph 5.

5. Inspection Procedure

NOTE: It can be necessary to remove a thin layer of paint to see the fastener locations.

A. Examine the aft flange of the lower chord at the front spar of the horizontal stabilizer for subsurface cracks from STAB STA 66.5 to STAB BL 281.81. Do the inspection as specified in Part 6, 51-00-00, Procedure 9, paragraph 6, and the steps that follow.

NOTE: The lower chord thickness changes that occur in the inspection area will cause the balance point to gradually increase or decrease.

(1) Start the inspection at STAB STA 66.5 and examine the lower chord for subsurface cracks at the forward row of fasteners. During the inspection:

(a) Monitor the balance point carefully. If the balance point increases by 10% of full screen height (FSH), it is necessary to balance the instrument again.

B. Do Paragraph 5.A. again to examine the lower chord for subsurface cracks at the aft row of fasteners.

C. Do Paragraph 5.A. and Paragraph 5.B. again to examine the lower chord at the opposite horizontal stabilizer for subsurface cracks.

6. Inspection Results

A. Refer to Part 6, 51-00-00, Procedure 9, paragraph 7, for instructions to help make an analysis of the indications that occur during the inspection.

B. Compare the signals that you get during the inspection to the signals that you get from the reference standard.

C. Compare the signals that you get during the inspection to the signals that you get from the same fastener location on the opposite side of the airplane.

D. To make sure a crack signal is from a crack, do an open hole eddy current inspection as specified in Part 6, 51-00-00, Procedure 16, at the fastener locations that cause crack signals to occur.

BOEING PROPRIETARY - Copyright © Unpublished Work - See title page for details

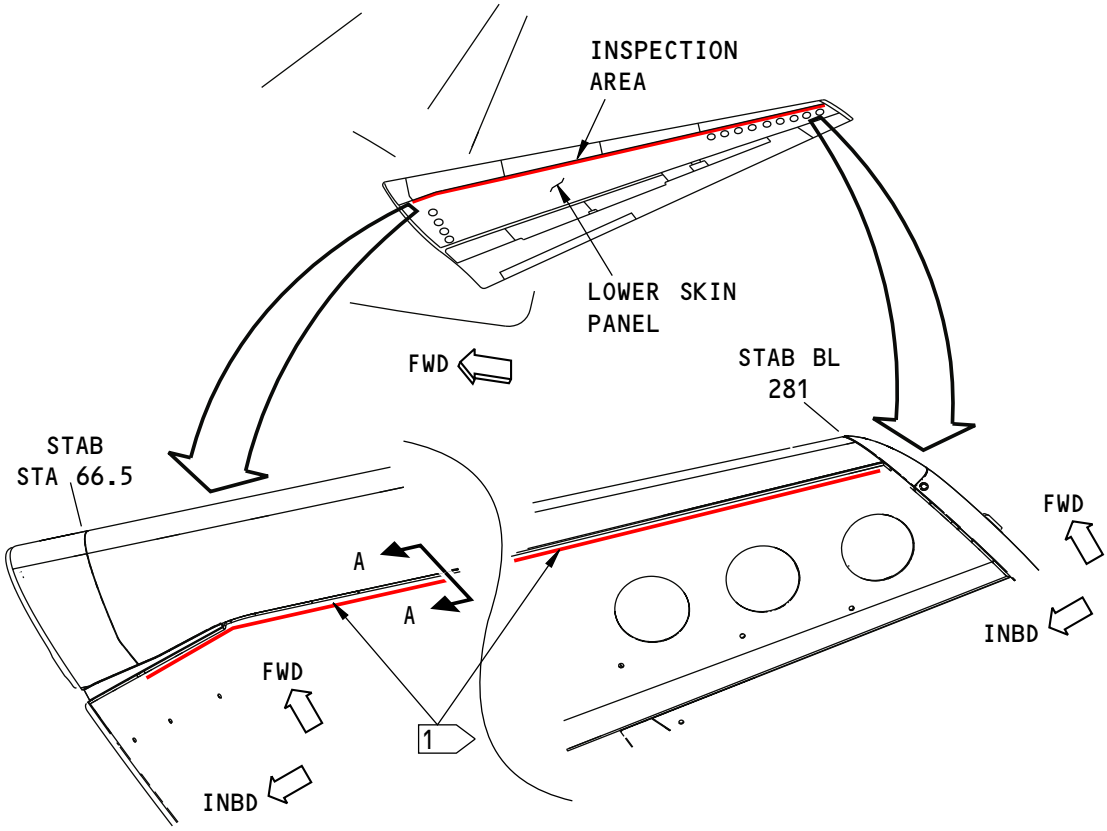

(VIEW AS YOU LOOK UP)
THE LEFT HORIZONTAL STABILIZER IS SHOWN;
THE RIGHT HORIZONTAL STABILIZER IS THE SAME

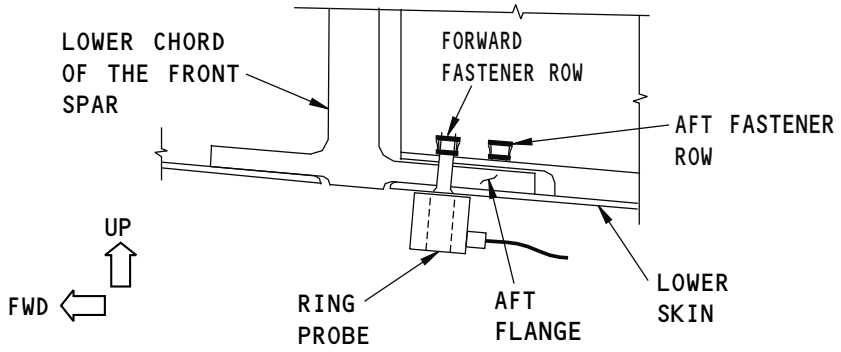

A–A

NOTES

1 EXAMINE ALL FASTENER LOCATIONS FROM STAB STA 66.5 TO STAB BL 281.81

2404358 S0000556360_V1

Inspection Area
Figure 1

BOEING PROPRIETARY - Copyright © Unpublished Work - See title page for details

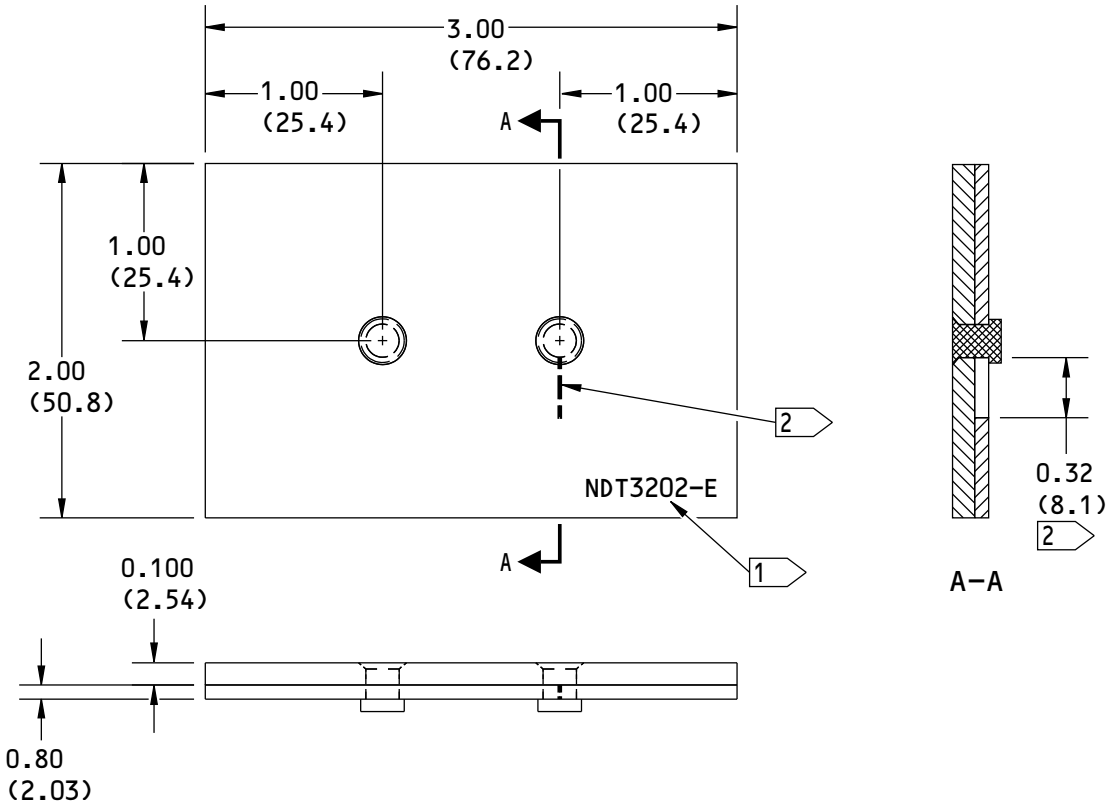

NOTES:

- ALL DIMENSIONS ARE IN INCHES (MILLIMETERS ARE IN PARENTHESES)
- TOLERANCE (UNLESS SPECIFIED DIFFERENTLY):

INCHES	MILLIMETERS
X.XXX = ±0.005	X.XX = ±0.10
X.XX = ±0.025	X.X = ±0.5
X.X = ±0.050	X = ±1

- SURFACE ROUGHNESS: 63 Ra OR BETTER
- MATERIAL:
  TOP PLATE: 2024-T3 ALUMINUM (CLAD OR BARE), OR AN EQUIVALENT, WITH A CONDUCTIVITY BETWEEN 28-32 IACS
  BOTTOM PLATE: 7150-T77511 ALUMINUM (CLAD OR BARE), OR AN EQUIVALENT, WITH A CONDUCTIVITY BETWEEN 35-39 IACS

1 ETCH OR STAMP THE REFERENCE STANDARD NUMBER, NDT3202-E, AT APPROXIMATELY THIS LOCATION

2 EDM NOTCH:
WIDTH: 0.010 (0.25) MAXIMUM
DEPTH: THROUGH THE THICKNESS
LENGTH: 0.32 (8.1)

- FASTENERS: USE BACR15GF6* RIVETS. (OTHER FASTENERS CAN BE USED IF THEY HAVE THE SAME CONFIGURATION AS THE BACR15GF6* RIVETS)

2407115 S0000557137_V1

Reference Standard NDT3202-E
Figure 2

BOEING PROPRIETARY - Copyright © Unpublished Work - See title page for details

PART 6 - EDDY CURRENT

HORIZONTAL STABILIZER - FRONT SPAR WEB (HFEC)

1. Purpose

A. Use this high frequency eddy current (HFEC) procedure to examine the front spar web of the horizontal stabilizer for cracks. The front spar web is examined from STAB STA 66.5 to STAB BL 281.81 (the STAB TIP) for cracks that can start at the fastener locations. The inboard and outboard web splices at STAB STA 111.1 are also examined. See Figure 1 for the inspection area.

B. This procedure uses an impedance plane display instrument.

C. The front spar web is aluminum.

D. 737 Maintenance Planning Data (MPD) Damage Tolerance Rating (DTR) Check Form Reference:

(1) Item: 55-10-06-WS

(2) Item: 55-10-06-W1

(3) Item: 55-10-06-W2

(4) Item: 55-10-06-W3

(5) Item: 55-10-06-W4

2. Equipment

A. General

(1) Use inspection equipment that can be calibrated on the reference standard as specified in Part 6, 51-00-00, Procedure 23, paragraph 5.

(2) Refer to Part 1, 51-01-00, for data about the equipment manufacturers.

B. Instrument

(1) Use an eddy current instrument that:

(a) Has an impedance plane display.

(b) Operates from 50 to 500 kHz.

C. The instruments that follow were used to help prepare this procedure.

(1) 500D; Olympus NDT

(2) Phasec 2D/3D; GE Inspection Technologies

D. Probes

(1) Use a probe that:

(a) Operates from 50 to 500 kHz.

(b) Has a 90 or a 45 degree angle with a minimum drop of 0.1 inch (2.5 mm) and a maximum drop of 0.6 inch (15.2 mm).

(2) The probes that follow were used to help prepare this procedure.

NOTE: Shielded probes are recommended.

(a) MTF901-50FX (50kHz-300kHz); NDT Engineering

(b) TPEN95-6B (50kHz-500kHz); Techna NDT

E. Reference Standards

BOEING PROPRIETARY - Copyright © Unpublished Work - See title page for details

(1) Use reference standards 126, 188A, and 189, or their equivalents, to help calibrate the instrument. See Part 6, 51-00-00, Procedure 23, for data about reference standards 126, 188A, and 189.

3. Prepare for the Inspection

A. Remove the leading edge panels of the horizontal stabilizers to get access to the inspection areas.

B. Identify the inspection area shown in Figure 1.

C. Identify STAB STA 66.5, 111.1, 175.5 and 258.28.

D. Remove paint only if it is loose.

E. Remove the fillet seal from the upper and lower edges of the web from STAB STA 66.5 to STAB STA 175.5, if necessary.

F. Remove the cap seal from the web fastener locations between STAB STA 175.5 and STAB STA 258.28, if necessary.

G. Remove sealant from the web fasteners between STAB STA 258.28 and the STAB TIP.

4. Instrument Calibration

A. Calibrate the instrument as specified in Part 6, 51-00-00, Procedure 23, paragraph 5.

(1) Use reference standards 126, 188A, and 189, or their equivalents, to help calibrate the instrument.

5. Inspection Procedure

A. Examine the edges of the front spar web of the horizontal stabilizer for cracks from STAB STA 66.5 to STAB STA 175.5 as specified in Part 6, 51-00-00, Procedure 23, paragraph 6 (see Figure 1, Inspection Area A).

NOTE: Remove the fillet seal, if necessary.

(1) Make a scan along the upper and lower edges of the web. See Section View B-B in Figure 1.

(2) Make a scan along the upper and lower edges of the inboard and outboard web splices at STAB STA 111.1. See Section View A-A in Figure 1.

B. Examine the front spar web of the horizontal stabilizer for cracks from STAB STA 175.5 to STAB BL 281.81 at the fastener locations shown in Figure 1, Inspection Area B and Section View C-C. Do the inspection as specified in Part 6, 51-00-00, Procedure 23, paragraph 6.

NOTE: Remove the cap seal and sealant from the fasteners, if necessary.

(1) Make a full scan around each fastener on the upper and lower fastener rows on the web. See Section View C-C in Figure 1.

C. Do Paragraph 5.A. and Paragraph 5.B. again to examine the front spar web for cracks at the opposite horizontal stabilizer.

6. Inspection Results

A. Refer to Part 6, 51-00-00, Procedure 23, paragraph 7, for instructions to help make an analysis of the indications that occur during the inspection.

BOEING PROPRIETARY - Copyright © Unpublished Work - See title page for details

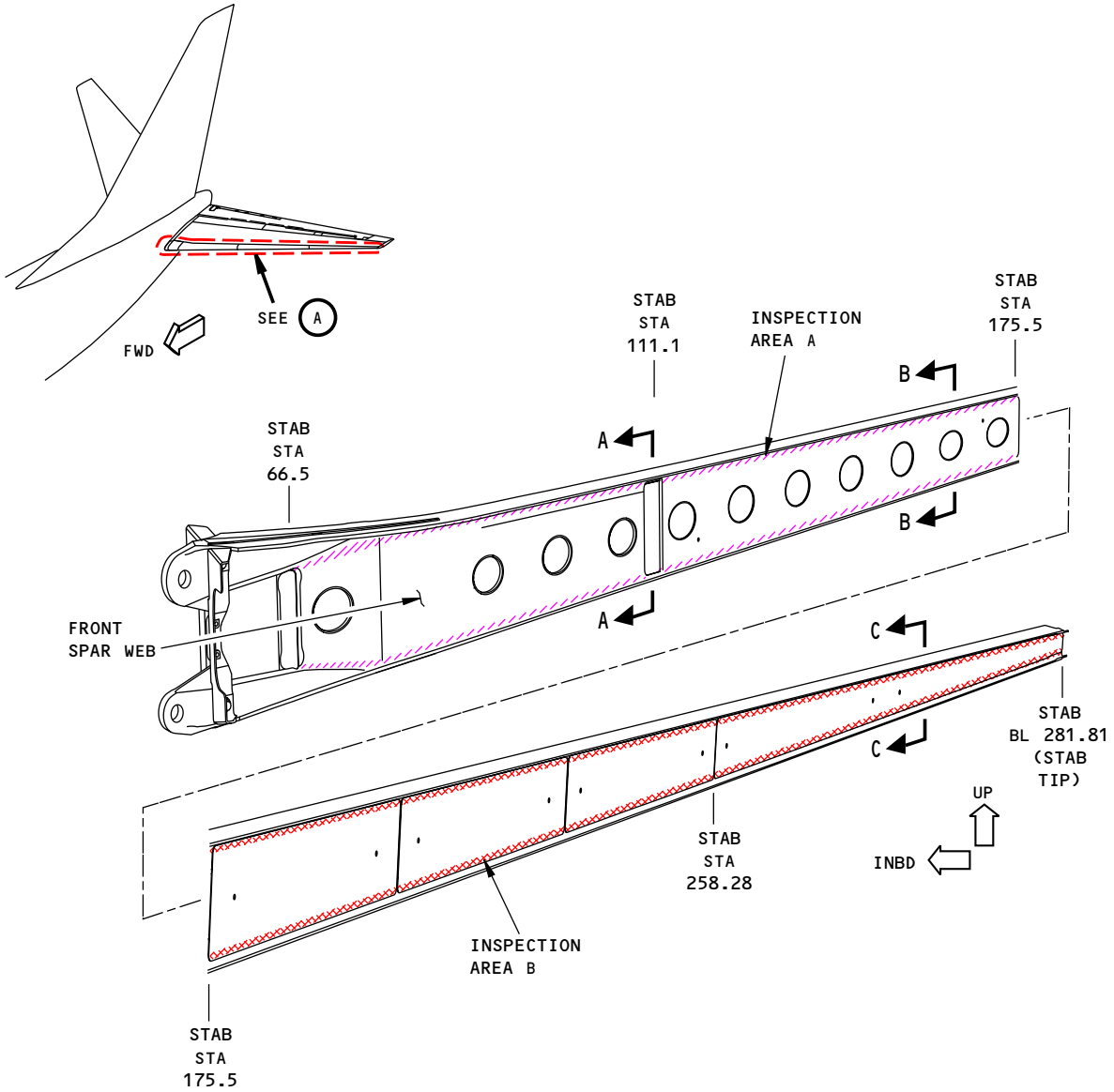

FRONT SPAR OF THE HORIZONTAL STABILIZER
(THE LEFT SIDE IS SHOWN; THE RIGHT SIDE IS OPPOSITE)

A

NOTES:

INSPECTION AREA A: UPPER AND LOWER EDGES OF THE WEB FROM STAB STA 66.5 TO 175.5.

INSPECTION AREA B: UPPER AND LOWER FASTENER ROWS OF THE WEB FROM STAB STA 175.5 TO THE STAB TIP.

2405558 S0000556364_V1

Inspection Area
Figure 1 (Sheet 1 of 2)

BOEING PROPRIETARY - Copyright © Unpublished Work - See title page for details

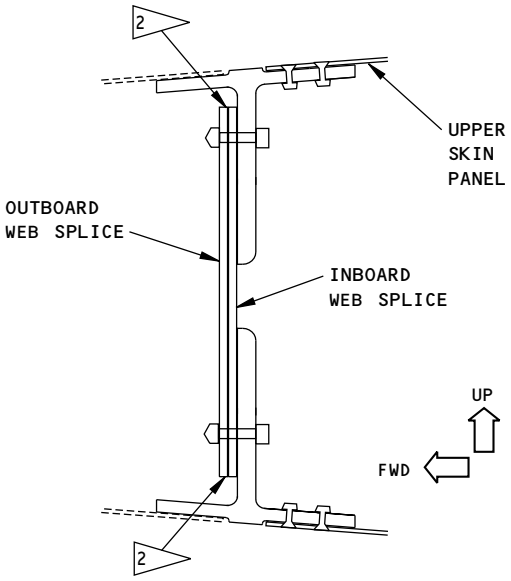

WEB SPLICE AT STAB STA 111.1
A-A

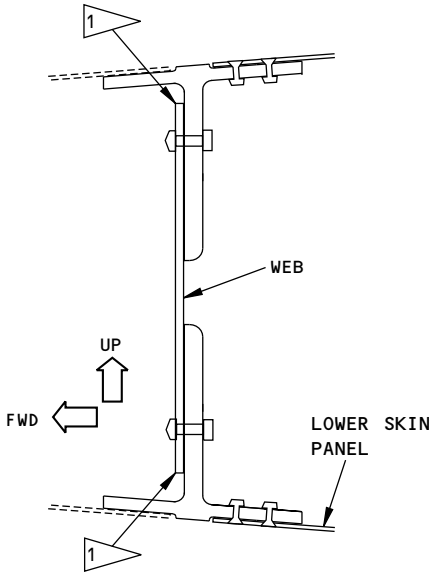

STAB STA 66.5 TO 175.5
B-B

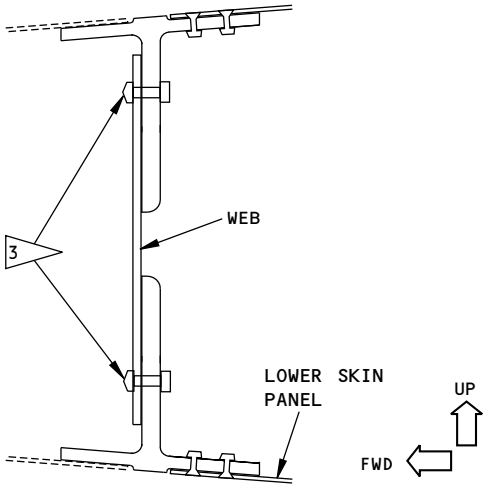

STAB STA 175.5 TO STAB BL 281.81
(STAB TIP)
C-C

1 MAKE A SCAN ALONG THE UPPER AND LOWER EDGES OF THE WEB FROM STAB STA 66.5 TO 175.5

2 MAKE A SCAN ALONG THE UPPER AND LOWER EDGES OF THE INBOARD AND OUTBOARD WEB SPLICES.

3 MAKE A SCAN AROUND EACH FASTENER ON THE UPPER AND LOWER FASTENER ROWS FROM STAB STA 175.5 TO THE STAB TIP.

2405568 S0000556365_V1

Inspection Area
Figure 1 (Sheet 2 of 2)

BOEING PROPRIETARY - Copyright © Unpublished Work - See title page for details

HORIZONTAL STABILIZER - WEB FLANGE OF THE UPPER CHORD AT THE REAR SPAR (HFEC)

1. Purpose

A. Use this high frequency eddy current (HFEC) procedure to examine the web flange of the upper chord at the rear spar of the horizontal stabilizer for cracks. The upper chord is examined for cracks from STAB STA 203.10 to STAB STA 310.54 at the fastener locations between the stiffeners. See Figure 1 for the inspection area.

B. This procedure uses an impedance plane display instrument.

C. The upper chord is aluminum.

D. 737 Maintenance Planning Data (MPD) Damage Tolerance Rating (DTR) Check Form Reference:

(1) Item: 55-10-04-11D

(2) Item: 55-10-04-13B

2. Equipment

A. General

(1) Use inspection equipment that can be calibrated on the reference standard as specified in Part 6, 51-00-00, Procedure 23, paragraph 5.

(2) Refer to Part 1, 51-01-00, for data about the equipment manufacturers.

B. Instrument

(1) The instruments that follow were used to help prepare this procedure.

(a) 500D; Olympus NDT

(b) Phasec 2D/3D; GE Inspection Technologies

(c) 2000D; Olympus NDT (Nortec)

C. Probes

(1) The probe that follows was used to help prepare this procedure.

(a) TPEN95-6B; Techna NDT

(b) ATPN45-5; Aerofab NDT

D. Reference Standard

(1) Use reference standard 188A, or an equivalent, to help calibrate the instrument. See Part 6, 51-00-00, Procedure 23, for data about reference standard 188A.

3. Prepare for the Inspection

A. Identify the web flange of the upper chord at the rear spar between STAB STA 203.10 and STAB STA 310.54.

B. Remove the elevators.

C. Remove trailing edge panels 333DB, 343DB, 333EB, 343EB, 333FB and 343FB.

D. Remove the cove installation panels.

E. Remove paint only if it is loose.

BOEING PROPRIETARY - Copyright © Unpublished Work - See title page for details

4. **Instrument Calibration**

   A. Calibrate the instrument as specified in Part 6, 51-00-00, Procedure 23, paragraph 5, to examine the web flange of the upper chord for cracks at the fastener locations.

5. **Inspection Procedure**

   A. Examine the web flange of the upper chord at the rear spar of the horizontal stabilizer for cracks as specified in Part 6, 51-00-00, Procedure 23, paragraph 6. Do the inspection at the fastener locations from STAB STA 203.10 to STAB STA 310.54 (see Figure 1).

      (1) Make a complete scan around each fastener.

   B. Do Paragraph 5.A. again to examine the upper chord for cracks at the opposite horizontal stabilizer.

6. **Inspection Results**

   A. A crack signal from the surface inspection will look almost the same as the notch signal from the reference standard.

      (1) Refer to Part 6, 51-00-00, Procedure 23, paragraph 7, for instructions to help make an analysis of the indications that occur during the inspection.

   B. To make sure that a crack indication is from a crack, you can remove the fastener and do an open hole eddy current inspection as specified in Part 6, 51-00-00, Procedure 16.

BOEING PROPRIETARY - Copyright © Unpublished Work - See title page for details

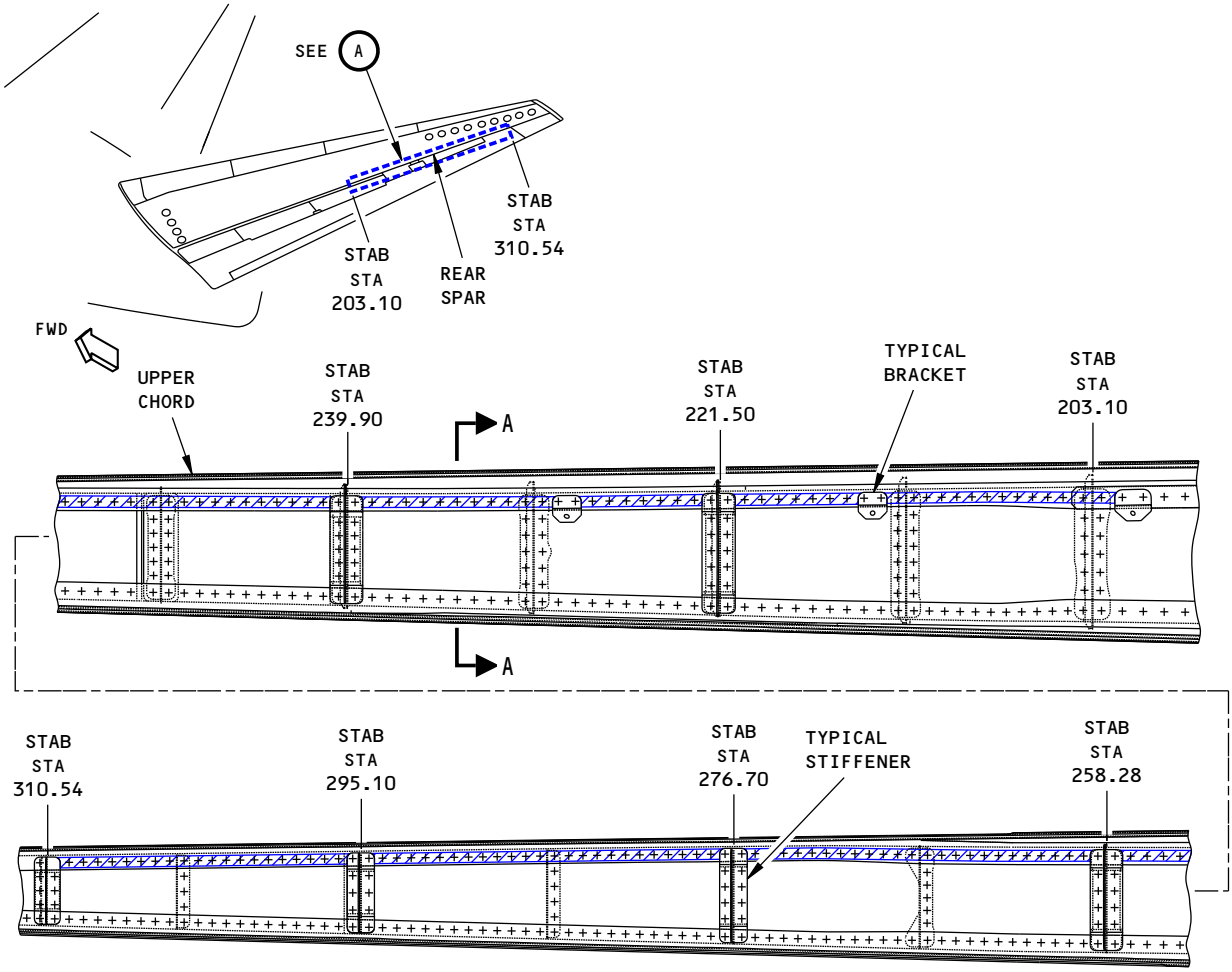

REAR SPAR
(VIEW IN THE FORWARD DIRECTION)
A

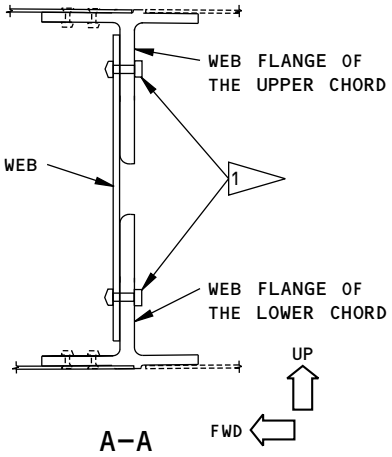

NOTES:

- THE LEFT HORIZONTAL STABILIZER IS SHOWN; THE RIGHT HORIZONTAL STABILIZER IS THE SAME.

INSPECTION AREA BETWEEN THE STIFFENERS AND THE BRACKETS.

1 MAKE A SCAN AROUND THE TAIL END OF THE FASTENER TO EXAMINE THE WEB FLANGE OF THE UPPER CHORD AT THE REAR SPAR FOR CRACKS FROM STAB STA 203.10 TO STAB STA 310.54. USE THE TAIL END OF THE FASTENER AS A PROBE GUIDE.

2405155 S0000556400_V2

Inspection Area
Figure 1

BOEING PROPRIETARY - Copyright © Unpublished Work - See title page for details

HORIZONTAL STABILIZER - UPPER CHORD OF THE REAR SPAR FROM STAB STA 310.54 TO THE STAB TIP (HFEC)

1. Purpose

A. Use this procedure to help find surface cracks in the vertical flange of the upper chord at the rear spar of the horizontal stabilizer. The upper chord is examined for cracks from STAB STA 310.54 to the STAB TIP at, and between, the stiffeners and ribs. See Figure 1 for the inspection area.

B. The upper chord is aluminum.

C. 737 Maintenance Planning Document (MPD) Damage Tolerance Record (DTR) Check Form Reference:

(1) Item: 55-10-04-13C

2. Equipment

A. General

(1) Use an eddy current instrument that has an impedance plane display that can be calibrated on the reference standard as specified in Paragraph 4.

(2) Refer to Part 1, 51-01-00, for data about the equipment manufacturers.

B. Instrument

(1) Use an eddy current instrument that has an impedance plane display and can operate from 50 to 500 kHz.

(2) The instruments that follow were used to help prepare this procedure.

(a) Nortec 500; Olympus NDT

(b) Phasec 3D; GE Inspection Technologies

C. Probes

(1) Use a probe that operates from 50 to 500 kHz.

(2) The probe that follows was used to help prepare this procedure.

(a) MTF-30/50-500 kHz; NDT Engineering (Olympus)

NOTE: Shielded probes are recommended.

D. Reference Standards

(1) Use reference standard 126, or an equivalent, to help calibrate the instrument. See Part 6, 51-00-00, Procedure 23, paragraph 3, for data about reference standard 126.

3. Prepare for the Inspection

A. Identify the inspection areas shown in Figure 1.

B. Get access to the inspection area.

C. Clean the inspection area.

(1) Remove sealant from the top edge of the web in the inspection area.

4. Instrument Calibration

A. Calibrate the instrument as specified in Part 6, 51-00-00, Procedure 23, paragraph 5.

BOEING PROPRIETARY - Copyright © Unpublished Work - See title page for details

(1) Use reference standard 126, or an equivalent, to help calibrate the instrument.

5. Inspection Procedure

A. Examine the upper chord for cracks at the rear spar of the horizontal stabilizer as specified in Part 6, 51-00-00, Procedure 23, paragraph 6. Do the inspection from the forward side of the upper chord, between STAB STA 310.54 and the STAB TIP of the horizontal stabilizer, as shown in Figure 1. Use the top edge of the web as a probe guide.

B. Do Paragraph 5.A. again to examine the upper chord of the rear spar for cracks at the opposite horizontal stabilizer.

6. Inspection Results

A. Refer to Part 6, 51-00-00, Procedure 23, paragraph 7, for instructions to help make an analysis of the indications that occur during the inspection.

BOEING PROPRIETARY - Copyright © Unpublished Work - See title page for details

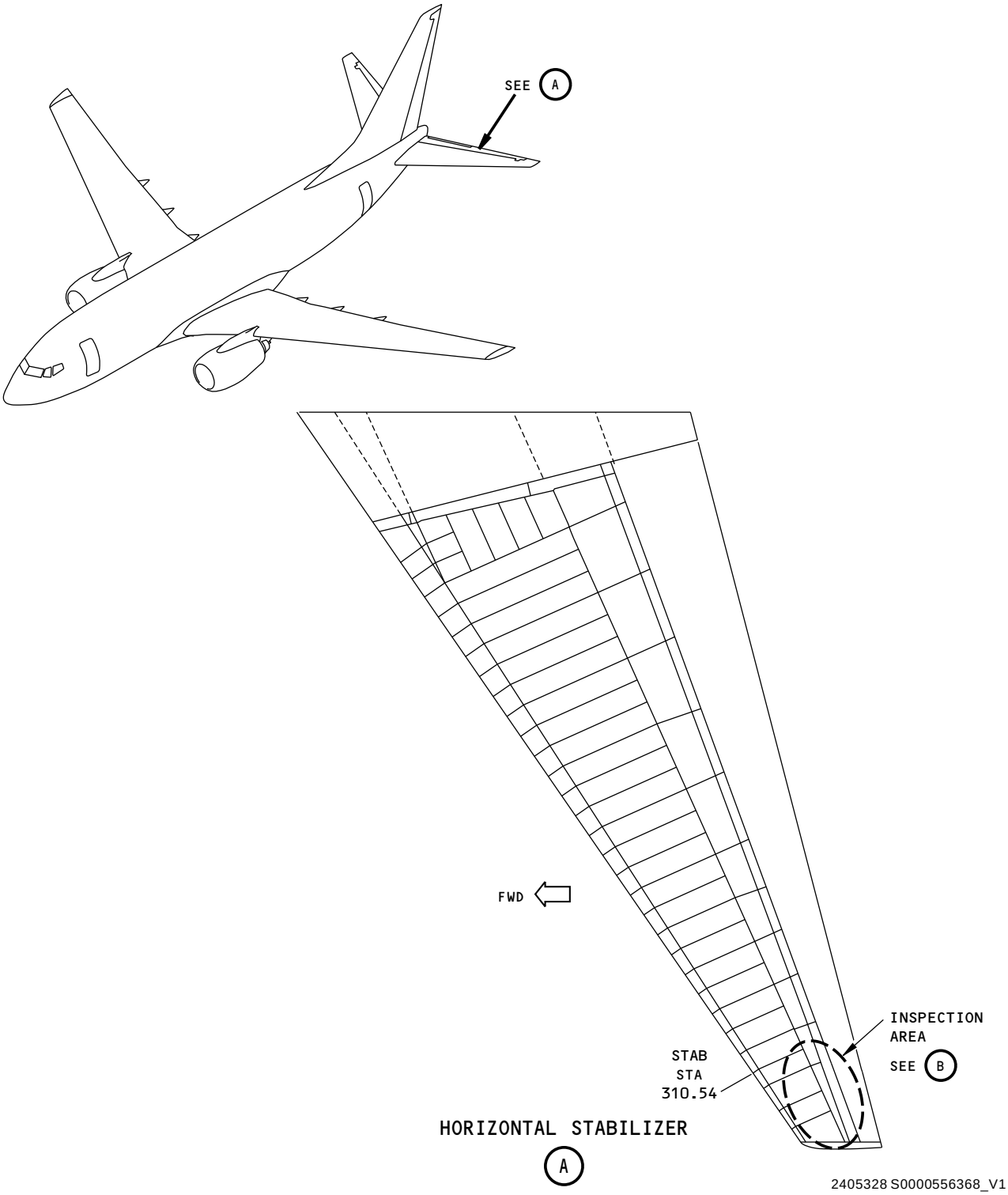

Inspection Area
Figure 1 (Sheet 1 of 2)

BOEING PROPRIETARY - Copyright © Unpublished Work - See title page for details

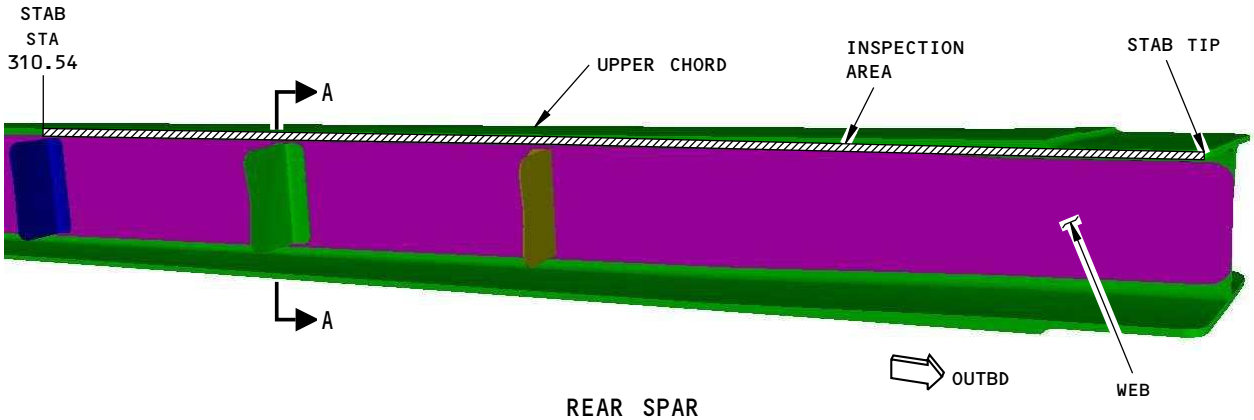

REAR SPAR
(VIEW AS YOU LOOK AFT)

B

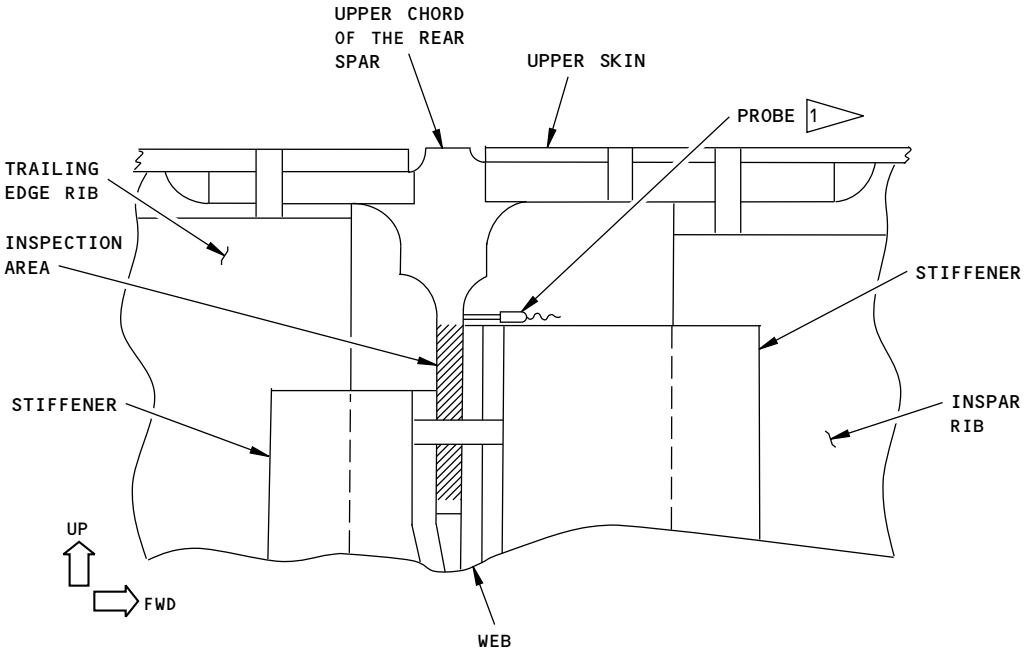

A–A

NOTES:

INSPECTION AREA

- THE LEFT HORIZONTAL STABILIZER IS SHOWN; THE RIGHT HORIZONTAL STABILIZER IS OPPOSITE.

1 USE THE WEB AS THE PROBE GUIDE TO EXAMINE THE VERTICAL AREA OF THE UPPER CHORD FOR CRACKS.

2405341 S0000556369_V1

Inspection Area
Figure 1 (Sheet 2 of 2)

BOEING PROPRIETARY - Copyright © Unpublished Work - See title page for details

PART 6 - EDDY CURRENT

HORIZONTAL STABILIZER CENTER SECTION - CLEVIS LUGS OF THE THRUST LINK (HFEC)

1. Purpose

A. Use this surface eddy current procedure to help examine the clevis lugs of the aluminum thrust links for cracks that can start at a lug hole and extend out from the flange of the bushing. See Figure 1 for the inspection area.

B. The thrust links connect to the rear spar of the horizontal stabilizer center section and must be removed from the airplane to do this inspection.

C. 737 Maintenance Planning Data (MPD) Damage Tolerance Record (DTR) Check Form Reference:

(1) Item: 55-10-02-3

2. Equipment

A. General

(1) Use inspection equipment that can be calibrated on the reference standard as specified in Paragraph 4.

(2) Refer to Part 1, 51-01-00, for data about the equipment manufacturers.

B. Instrument

(1) Use an eddy current instrument that:

(a) Has an impedance plane display.

(b) Operates at a frequency range of 50 to 500 kHz.

(2) The instruments that follow were used to help prepare this procedure.

(a) Phasec 2; Olympus

(b) Nortec 500; Olympus

C. Probes

(1) Use a right-angle probe with a maximum drop of 0.5 inch (13 mm).

(2) Refer to Part 6, 51-00-00, Procedure 23, paragraph 3.C, for data about probe selection.

(3) The probe that follows was used to help prepare this procedure.

(a) MP902-50; Olympus

D. Reference Standards

(1) Use the aluminum rivet location on reference standard 188A, or an equivalent, to help calibrate the instrument. Refer to Part 6, 51-00-00, Procedure 23, paragraph 3.D, for data about reference standard 188A.

3. Prepare for the Inspection

A. Remove the thrust links from the airplane.

B. Remove the sealant that is around the flange of each bushing.

4. Instrument Calibration

A. Calibrate the instrument as specified in Part 6, 51-00-00, Procedure 23, paragraph 5. Use reference standard 188A, or an equivalent, to help calibrate the instrument.

BOEING PROPRIETARY - Copyright © Unpublished Work - See title page for details

5. **Inspection Procedure**

A. Examine the clevis lugs of the thrust link for cracks as specified in Part 6, 51-00-00, Procedure 23, paragraph 6, and the steps that follow:

(1) Use the flange of each bushing as a probe guide.

(2) Make a minimum 360 degree scan around the inner and outer bushings in each of the four lugs of the thrust link. A total of eight scans are necessary on each thrust link. There are four thrust links to examine for each airplane. See Figure 1.

6. **Inspection Results**

A. Refer to Part 6, 51-00-00, Procedure 23, paragraph 7, for instructions to help make an analysis of the indications that occur during the inspection.

BOEING PROPRIETARY - Copyright © Unpublished Work - See title page for details

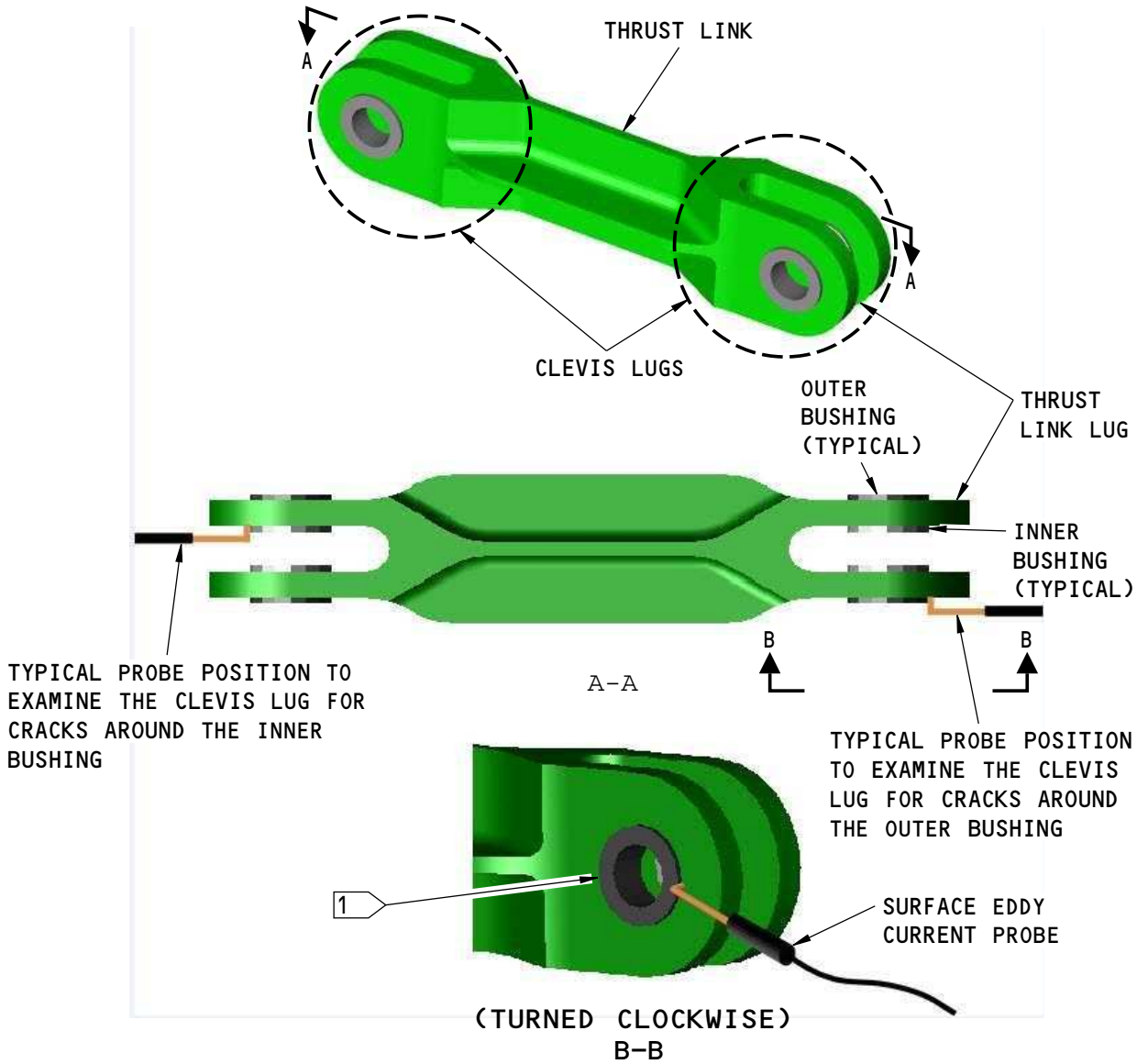

NOTES:

- THERE ARE FOUR THRUST LINKS TO BE EXAMINED FOR CRACKS ON EACH AIRPLANE
- EIGHT CLEVIS LUG SURFACES MUST BE EXAMINED ON EACH THRUST LINK

1 MAKE A 360 DEGREE SCAN AROUND THE INNER AND OUTER BUSHINGS IN EACH LUG.

2476633 S0000580588_V1

Inspection Areas
Figure 1

BOEING PROPRIETARY - Copyright © Unpublished Work - See title page for details

PART 6 - EDDY CURRENT

HORIZONTAL STABILIZER - UPPER CHORD OF THE REAR SPAR FROM STAB STA 67.78 TO STAB BL 281.81 (LFEC)

1. Purpose

A. Use this low frequency eddy current (LFEC) procedure to find cracks in the upper chord of the rear spar of the horizontal stabilizer from STAB STA 67.78 to STAB BL 281.81. See Figure 1 for the inspection areas.

B. Use this procedure to examine the upper chord of the rear spar for cracks that can occur at the fastener locations, in the forward and/or aft direction. The areas to be examined are as follows:

(1) The fastener locations that attach the upper inspar skin and the inspar ribs to the forward flange of the upper chord from STAB STA 67.78 to STAB BL 281.81. See Figure 1, View B.

(a) The fasteners from STAB STA 67.78 to STAB STA 83.50 and at all (30) inspar rib locations are titanium.

(b) The fasteners between the inspar ribs, from STAB STA 83.50 to STAB BL 281.81 are aluminum.

(2) The fastener locations that attach the trailing edge upper panels, the cove installation and the trailing edge ribs, to the aft flange of the upper chord from STAB STA 67.78 to STAB BL 281.81. See Figure 1, Views C, F, G and H.

(a) The fasteners between the trailing edge ribs are all aluminum, except at the cove installation where the fasteners are titanium.

(b) The fasteners at all (13) trailing edge rib locations are hidden (below the edgeband of the upper panel) and are titanium.

C. This procedure uses a ring probe to examine the fastener locations at the forward flange and a spot probe to examine the fastener locations at the aft flange of the upper chord. See Paragraph 2.C.(1) for data about the ring probe and Paragraph 2.C.(2) for data about the spot probe.

D. The upper chord of the rear spar and the upper inspar skin are aluminum. The skin of the trailing edge panel is a fiberglass composite material, except for the upper panel area that is between ELEV STA 265.45 and STAB BL 254.66, which is aluminum.

E. 737 Maintenance Planning Document (MPD) Damage Tolerance Rating (DTR) Check Form Reference:

(1) Item: 55-10-04-11A and 11B

(2) Item: 55-10-04-12A and 12B

2. Equipment

A. General

(1) Use inspection equipment that can be calibrated on the reference standard as specified in Paragraph 4.

(2) Refer to Part 1, 51-01-00, for data about the equipment manufacturers.

B. Instrument

(1) Use an eddy current instrument that:

(a) Has an impedance plane display.

(b) Operates at a frequency range from 1 to 20 kHz.

BOEING PROPRIETARY - Copyright © Unpublished Work - See title page for details

(2) The instruments that follow were used to help prepare this procedure.

(a) Phasec 3d; GE Inspection Technologies

(b) Nortec 500; Olympus NDT

C. Probes

(1) Use a shielded ring probe (a reflection type is recommended) that operates from 1 to 2 kHz and has the diameters that follow:

(a) Inner diameter of 0.30 to 0.35 inch (8.1 to 8.9 mm).

(b) Maximum outer diameter of 0.61 inch (15.7 mm).

(2) Use a shielded spot probe (a reflection type is recommended) that operates from 2 to 20 kHz and has diameters from 0.25 to 0.31 inch (6.4 to 7.9 mm).

(3) The probes that follow were used to help prepare this procedure.

NOTE: Other probes can be used if they can be calibrated with the reference standard specified in Paragraph 2.D.

(a) Ring probes:

1) AF-4084; AeroFab NDT

2) TEK-4067; Techna NDT

(b) Spot probes:

1) RS902-50B/20K/2D; Olympus NDT

2) AF-4085; AeroFab NDT

3) SDP.3-2K; Techna NDT

D. Reference Standards

(1) Use reference standard NDT3209-A to help calibrate the instrument to examine the fastener locations in the forward flange and the three fastener locations in the aft flange between the ribs at ELEV STA 265.45 and STAB BL 254.66, shown in Figure 1, View G. See Figure 2 for data about reference standard NDT3209-A.

(2) Use reference standard NDT3209-B to help calibrate the instrument to examine the fastener locations in the aft flange. See Figure 3 for data about reference standard NDT3209-B.

3. Prepare for the Inspection

A. Identify the inspection areas shown in Figure 1.

B. Get access to the inspection area.

C. Clean the inspection area if necessary.

(1) If necessary, remove paint to see all the visible fastener heads that attach the inspar skin and the trailing edge panels to the upper chord.

4. Instrument Calibration

A. Calibrate the instrument as specified in Paragraph 4.B. to examine the fastener locations in the forward flange of the upper chord that are identified in Paragraph 1.B.(1). Calibrate the instrument as specified in Paragraph 4.C. to examine the fastener locations in the aft flange of the upper chord that are identified in Paragraph 1.B.(2).

BOEING PROPRIETARY - Copyright © Unpublished Work - See title page for details

B. Calibrate the instrument to examine the fastener locations in the forward flange of the upper chord (these fastener locations are identified in Paragraph 1.B.(1)) as follows. This calibration is used to examine all the fastener locations (aluminum and titanium).

(1) Set the instrument frequency between 1 and 2 kHz.

(2) Connect a ring probe that has the properties specified in Paragraph 2.C.(1) to the instrument.

(3) Put a nonconductive shim or tape on reference standard NDT3209-A at the ring probe positions to be used during calibration. See Figure 4, Detail I. The thickness of the shim or tape must be equivalent (±0.003 inch (0.08 mm)) to the paint thickness on the airplane.

(4) Put the ring probe on reference standard NDT3209-A at ring probe position 1, (the fastener location without a notch) as shown in Figure 4, Detail I. Make sure the center of the probe is above the center of the fastener.

(5) Balance the instrument.

(6) Set the balance point to 30% of full screen height (FSH) and 50% of full screen width (FSW) as shown in Figure 4, Detail III.

(7) Tilt the probe and adjust the instrument phase control to make the lift-off signal move from right to left as shown Figure 4, Detail III.

(8) Put the probe on the reference standard at ring probe position 2 (the fastener location with a notch) as shown in Figure 4, Detail I. Make sure the center of the probe is above the center of the fastener.

(9) Adjust the instrument sensitivity to put the notch signal at 70% of FSH as shown in Figure 4, Detail III. If necessary, use a vertical gain that is higher than the horizontal gain to get the signal to look almost the same as shown in Detail III.

(10) Do Paragraph 4.B.(4) thru Paragraph 4.B.(8) again to make sure the calibration is correct. Make adjustments to the instrument gain if the calibration is not correct.

C. Calibrate the instrument to examine the fastener locations in the aft flange of the upper chord (these fastener locations are identified in Paragraph 1.B.(2)) as follows:

(1) Use the calibration instructions in Paragraph 4.C.(4) to examine the fastener locations between the trailing edge ribs (the fasteners at these locations attach the trailing edge panels to the upper chord).

(2) Use the calibration instructions in Paragraph 4.C.(5) to examine the hidden fastener locations at the 13 trailing edge rib locations (the fasteners at these locations attach the trailing edge ribs to the upper chord).

(3) Use the calibration instructions in Paragraph 4.C.(6) to examine the one aluminum and the two hidden fastener locations between the ribs at ELEV STA 265.45 and STAB BL 254.66. These fastener locations are shown in Figure 1, View G.

(4) Calibrate the instrument to examine the fastener locations that are between the trailing edge ribs (fasteners that attach the trailing edge panels to the upper chord), as follows:

(a) Set the instrument frequency to 20 kHz.

(b) Connect a spot probe that has the properties specified in Paragraph 2.C.(2) to the instrument.

BOEING PROPRIETARY - Copyright © Unpublished Work - See title page for details

(c) Put a nonconductive straightedge on reference standard NDT3209-B, above the calibration location “B” fastener locations and with the edge of the straightedge aligned with the outer edges of the fastener heads. See Figure 5, Detail I for the typical position of the straightedge.

(d) Put the spot probe on the reference standard at probe position 1 (the probe position between the fasteners) of calibration location “B” as shown in Figure 5, Detail I. Make sure the probe is against the straightedge.

(e) Balance the instrument.

(f) Set the balance point on the screen display to 30% of FSH and 70% of FSW as shown in Figure 5, Detail II.

(g) Tilt the spot probe and adjust the instrument phase control to make the lift-off signal move from right to left as shown Figure 5, Detail II.

(h) Move the spot probe to probe position 2 (the fastener location with a notch) as shown in Figure 5, Detail I. Move the probe from side to side a small quantity to get a maximum signal from the notch.

(i) Adjust the instrument sensitivity to put the notch signal at 70% of FSH as shown in Figure 5, Detail II. If necessary, use a vertical gain that is higher than the horizontal gain to get the signal to look almost the same as shown in Detail II.

(j) Do Paragraph 4.C.(4)(d) thru Paragraph 4.C.(4)(h) again to make sure the calibration is correct. Make adjustments to the instrument gain if the calibration is not correct.

(k) Move the spot probe to probe position 3 (the fastener location without a notch) as shown in Figure 5, Detail I and monitor the signal from the edge of the fastener. Make sure the signal is between 5 and 10% of FSH. If the signal is more than 10% of FSH, move the straightedge away from the edge of the fastener a small quantity and do this step again until the signal goes below 10% of FSH. If the straightedge is moved, do Paragraph 4.C.(4)(d) and Paragraph 4.C.(4)(h) to make sure the calibration is correct. Make adjustments to the instrument gain if the calibration is not correct.

(5) Calibrate the instrument to examine the hidden fastener locations that are at the trailing edge ribs (the fasteners at these locations attach the trailing edge rib to the upper chord), as follows:

NOTE: Views D and E in Figure 1 show the typical fastener configurations at the trailing edge rib locations and the probe positions used to find the hidden fastener locations.

NOTE: Table I in Figure 1 identifies the number and diameter of the fasteners at the trailing edge rib locations.

NOTE: This calibration contains two parts. Paragraph 4.C.(5)(c) is used to find the center of the hidden fasteners and Paragraph 4.C.(5)(d) is used to find possible cracks that can start at a fastener hole.

(a) Set the instrument frequency to 20 kHz.

(b) Connect a spot probe that has the properties specified in Paragraph 2.C.(2) to the instrument.

(c) Do the steps that follow to calibrate the instrument to find the center of the hidden number 6 and 8 fastener locations at the trailing edge rib locations.

1) Put the spot probe on reference standard NDT3209-B at probe position 4 of calibration location “A” (the number 8 diameter fastener holes). See Figure 5, Detail I.

2) Balance the instrument.

BOEING PROPRIETARY - Copyright © Unpublished Work - See title page for details

3) Set the balance point on the screen display to 30% of FSH and 70% of FSW. See Figure 5, Detail III.

4) Tilt the spot probe and adjust the instrument phase control to make the lift-off signal move from right to left as shown in Figure 5, Detail III.

5) Move the spot probe to probe position 5 such that the center of the spot probe is above the center of the fastener hole without the notch as shown in Figure 5, Detail I. Move the spot probe above the hole to get a maximum end point signal as shown in Figure 5, Detail III, flagnote 1.

6) Adjust the vertical and horizontal gain and phase controls to get the signal to look almost the same as shown in Figure 5, Detail III. This is the typical signal that occurs from a number 8 diameter fastener hole.

7) Move the spot probe to probe position 5 such that the center of the spot probe is above the center of the fastener hole without the notch at calibration location “C” (the number 6 diameter fastener holes). See Figure 5, Detail I.

8) Monitor the signal that occurs from the typical number 6 diameter fastener hole as shown in Figure 5, Detail IV.

NOTE: Do not make adjustments to the instrument.

9) Save this instrument setup. Paragraph 4.C.(5)(d) uses the same calibration but with a different gain adjustment.

(d) Do the steps that follow to calibrate the instrument to find possible cracks that can start at the fastener locations at the trailing edge ribs.

1) Use the same instrument setup that was saved in Paragraph 4.C.(5)(c)9).

2) Put the nonconductive straightedge on reference standard NDT3209-B, above calibration location “A” (the number 8 diameter fastener holes) and with the edge of the straightedge aligned with the outer edge of the circle that identifies the countersink of the hidden fastener hole. See Figure 5, Detail I for the typical position of the straightedge.

3) Put the spot probe on the reference standard at probe position 1 (the probe position between the fastener holes) of calibration location “A” as shown in Figure 5, Detail I. Make sure the spot probe is against the straightedge.

4) Balance the instrument.

5) Move the spot probe to probe position 2 (the fastener hole location with a notch) as shown in Figure 5, Detail I. Move the spot probe from side to side a small quantity to get a maximum signal from the notch.

6) Adjust the instrument sensitivity to put the notch signal at 70% of FSH as shown in Figure 5, Detail V.

7) Do Paragraph 4.C.(5)(d)3) thru Paragraph 4.C.(5)(d)5) again to make sure the calibration is correct. Make adjustments to the instrument gain if the calibration is not correct.

BOEING PROPRIETARY - Copyright © Unpublished Work - See title page for details

8) Move the spot probe to probe position 3 (the fastener hole location without a notch) as shown in Figure 5, Detail I and monitor the signal from the edge of the fastener hole. Make sure the signal is between 5 and 10% of FSH. If the signal is more than 10% of FSH, move the straightedge away from the edge of the fastener hole a small quantity and do this step again until the signal goes below 10% of FSH. If the straightedge is moved, do Paragraph 4.C.(5)(d)3) and Paragraph 4.C.(5)(d)5) again to make sure the calibration is correct. Make adjustments to the instrument gain if the calibration is not correct.

9) Do Paragraph 4.C.(5)(d)2) thru Paragraph 4.C.(5)(d)8) again, but with the nonconductive straightedge at calibration location “C” (the number 6 diameter fastener holes). Adjust the instrument gain only if the notch signal is less than the 70% of FSH signal that was set in Paragraph 4.C.(5)(d)6).

(6) Calibrate the instrument to examine the one aluminum fastener location that you can see and the two hidden titanium fastener locations that are between the ribs at ELEV STA 265.45 and STAB BL 254.66 and are shown in Figure 1, View G.

(a) Set the instrument frequency between 2 and 3 kHz.

(b) Connect a spot probe that has the properties specified in Paragraph 2.C.(2) to the instrument.

(c) Put a nonconductive shim or tape on reference standard NDT3209-A at the probe positions to be used during calibration. See Figure 4, Detail II. The thickness of the shim or tape must be equivalent (±0.003 inch (0.08 mm)) to the paint thickness on the airplane.

(d) Put the nonconductive straightedge on the reference standard, above the fastener locations and with the edge of the straightedge aligned with the outer edge of the fastener heads. See Figure 4, Detail II.

(e) Put the spot probe on the reference standard at spot probe position 1 (the probe position between the fasteners) as shown in Figure 4, Detail II. Make sure the spot probe is against the straightedge.

(f) Balance the instrument.

(g) Set the balance point to 30% of FSH and 70% of FSW as shown in Figure 4, Detail IV.

(h) Tilt the spot probe and adjust the instrument phase control to make the lift-off signal move from right to left as shown Figure 4, Detail IV.

(i) Move the spot probe to spot probe position 2 (the fastener location with a notch) as shown in Figure 4, Detail II. Move the probe from side to side a small quantity to get a maximum signal from the notch.

(j) Adjust the instrument sensitivity to put the notch signal at 70% of FSH as shown in Figure 4, Detail IV. If necessary, use a vertical gain that is higher than the horizontal gain to get the signal to look almost the same as shown in Detail IV.

(k) Do Paragraph 4.C.(6)(e) thru Paragraph 4.C.(6)(i) again to make sure the calibration is correct. Make adjustments to the instrument gain if the calibration is not correct.

(l) Move the spot probe to spot probe position 3 (the fastener location without a notch) as shown in Figure 4, Detail II and monitor the signal from the edge of the fastener. Make sure the signal is between 5 and 10% of FSH. If the signal is more than 10% of FSH, move the straightedge away from the edge of the fastener a small quantity and do this step again until the signal goes below 10% of FSH. If the straightedge is moved during this step, do Paragraph 4.C.(6)(e) and Paragraph 4.C.(6)(i) again to make sure the calibration is correct. Make adjustments to the instrument gain if the calibration is not correct.

BOEING PROPRIETARY - Copyright © Unpublished Work - See title page for details

5. **Inspection Procedure**

A. Examine the fastener locations in the forward flange of the upper chord for cracks (these fastener locations are identified in Paragraph 1.B.(1)) as follows:

(1) Calibrate the instrument as specified in Paragraph 4.B.

(2) Identify all the titanium fastener locations and all 30 inspar rib locations between STAB STA 67.78 and STAB STA 83.50. See Figure 1.

(3) Balance the instrument on the airplane as follows:

(a) Put the center of the probe on the center of two fasteners in the inspection area and monitor the screen display. Move the probe at each fastener location to get a minimum signal.

(b) Put the center of the probe on the center of the fastener that had the lowest signal.

(c) Balance the instrument.

(4) Examine all the titanium fastener locations identified in Figure 1 for cracks. During the inspection, do the steps that follow:

(a) Monitor the screen display for signals that are 50% (or more) of FSH.

NOTE: Monitor the screen display for the balance point to gradually move up the screen as you examine from inboard to outboard. The gradual movement up is typically caused by a decrease in the fastener to edge distance. Balance the instrument if the gradual movement of the balance point is more than 10% of FSH.

(b) Make a mark at the locations where you get signals that are 50% (or more) of FSH.

(c) Go to Paragraph 6. for instructions to help make an analysis of the fastener locations that cause signals to occur that are 50% (or more) of FSH.

(d) Frequently do a calibration test of the instrument as follows:

NOTE: Do not adjust the instrument gain.

1) Put the probe on the reference standard to get the maximum signal from the notch.

2) Compare the signal you got from the notch during calibration with the signal you get now.

3) If the signal from the notch in the reference standard has changed 10% (or more) from the signal you got during calibration, do the calibration and inspection again for all the fasteners examined since the last calibration test.

(5) Identify all of the aluminum fastener locations between the inspar rib locations from STAB STA 83.50 to STAB BL 281.81. See Figure 1.

(6) Balance the instrument on the airplane as follows:

(a) Put the center of the probe on the center of the two or more fasteners in the inspection area and monitor the screen display. Move the probe at each fastener location to get a minimum signal.

(b) Put the center of the probe on the center of the fastener that had the lowest signal.

(c) Balance the instrument.

(7) Examine all the titanium fastener locations identified in Figure 1 for cracks. During the inspection, do the steps that follow:

BOEING PROPRIETARY - Copyright © Unpublished Work - See title page for details

(a) Monitor the screen display for signals that are 50% (or more) of FSH.

NOTE: Monitor the screen display for the balance point to gradually move up the screen as you examine from inboard to outboard. The gradual movement up is typically caused by a decrease in the fastener to edge distance. Balance the instrument if the gradual movement of the balance point is more than 10% of FSH.

(b) Make a mark at the locations where you get signals that are 50% (or more) of FSH.

(c) Go to Paragraph 6. for instructions to help make an analysis of the fastener locations that cause signals to occur that are 50% (or more) of FSH.

(d) Frequently do a calibration test of the instrument as follows:

NOTE: Do not adjust the instrument gain.

1) Put the probe on the reference standard to get the maximum signal from the notch.

2) Compare the signal you got from the notch during calibration with the signal you get now.

3) If the signal from the notch in the reference standard has changed 10% (or more) from the signal you got during calibration, do the calibration and inspection again for all the fasteners examined since the last calibration test.

B. Examine the trailing edge panel fastener locations in the aft flange of the upper chord for cracks (these fastener locations are identified in Paragraph 1.B.(2)) as follows:

NOTE: This inspection contains two parts. Paragraph 5.B.(1) examines the fastener locations between the trailing edge rib locations. Paragraph 5.B.(2) examines the hidden fastener locations at the (13) trailing edge rib locations.

(1) Examine the fastener locations between the ribs as follows:

(a) Calibrate the instrument as specified in Paragraph 4.C.(4).

(b) Identify all of the fastener locations and make sure the heads of the fasteners can be seen.

(c) Put the nonconductive straightedge on the inspection surface with the edge of the straightedge aligned with the most forward or aft edge of the group of fastener locations to be examined. See Figure 1, flagnote 10 for the typical straightedge position.

(d) Put the probe on the inspection surface between two fastener locations and against the straightedge as shown in Figure 1, flagnote 11.

(e) Balance the instrument.

(f) Examine one side (forward or aft) of the fastener locations for cracks as follows:

1) Move the probe to make a scan of two or three fastener locations and monitor the screen display to make sure the straightedge position is correct. The correct position of the straightedge will cause an edge signal to occur from the fastener that is between 5 and 10% of FSH.

2) Examine all the fastener locations along the length of the straightedge and monitor the screen display for signals that are 50% (or more) of FSH.

NOTE: The inspection area on the aft side of the fasteners is near the edge of the upper chord. Monitor the screen display during the inspection for the balance point to gradually move up the screen display which can be caused by a possible edge effect condition.

3) Make a mark at the locations that cause signals to occur that are 50% (or more) of FSH.

BOEING PROPRIETARY - Copyright © Unpublished Work - See title page for details

4) Make sure to keep the probe against the straightedge at all times during the inspection.

5) Make sure the straightedge does not move during the inspection.

6) Go to Paragraph 6. for instructions to help make an analysis of the fastener locations that cause signals to occur that are 50% (or more) of FSH.

(g) Do Paragraph 5.B.(1)(c) thru Paragraph 5.B.(1)(f) again, but with the straightedge aligned to examine the opposite side of the fasteners for cracks.

(h) Do Paragraph 5.B.(1)(c) thru Paragraph 5.B.(1)(g) again for all other fastener locations that remain to be examined on the horizontal stabilizer.

(i) Do Paragraph 5.B.(1)(c) thru Paragraph 5.B.(1)(h) again on the opposite horizontal stabilizer

(2) Examine the hidden fastener locations at the 13 trailing edge rib locations for cracks as follows:

(a) Calibrate the instrument as specified in Paragraph 4.C.(5)(a) and Paragraph 4.C.(5)(b).

(b) Calibrate the instrument as specified in Paragraph 4.C.(5)(c) to find and make a mark on the horizontal stabilizer of all the fastener locations. See Figure 1, Views D and E for the typical fastener configurations and probe positions and see Figure 1, Table I for the number and diameter of the fasteners at the rib locations.

(c) Calibrate the instrument as specified in Paragraph 4.C.(5)(d) to examine the hidden fastener locations for cracks.

(d) Examine the hidden fastener locations for cracks as follows:

1) Put the nonconductive straightedge on the inspection surface with the edge of the straightedge aligned with the most forward or aft edges of the marked fastener locations to be examined. See Figure 1, flagnote 10 for the typical straightedge position.

2) Put the probe on the inspection surface, between two (hidden) fastener locations and against the straightedge as shown in Figure 1, flagnote 11.

3) Balance the instrument.

4) Examine one side (forward or aft) of the fastener locations for cracks as follows:

a) Move the probe to make a scan and monitor the screen display to make sure the straightedge position is correct. The correct position of the straightedge will cause an edge signal to occur from the fastener that is between 5 and 10% of FSH.

b) Examine all of the fastener locations along the length of the straightedge and monitor the screen display for signals that are 50% (or more) of FSH.

NOTE: The inspection area on the aft side of the fasteners is near the edge of the upper chord. Monitor the screen display during the inspection for the balance point to gradually move up the screen display which can be caused by a possible edge effect condition.

c) Make a mark at the locations that cause signals to occur that are 50% (or more) of FSH.

d) Make sure to keep the probe against the straightedge at all times during the inspection.

e) Make sure the straightedge does not move during the inspection.

f) Go to Paragraph 6. for instructions to help make an analysis of the fastener locations that cause signals to occur that are 50% (or more) of FSH.

BOEING PROPRIETARY - Copyright © Unpublished Work - See title page for details

5) Do Paragraph 5.B.(2)(d)1) thru Paragraph 5.B.(2)(d)4) again, but with the straightedge aligned to examine the opposite side of the hidden fasteners for cracks.

6) Do Paragraph 5.B.(2)(d)1) thru Paragraph 5.B.(2)(d)5) again for all other fastener locations that remain to be examined on the horizontal stabilizer.

7) Do Paragraph 5.B.(2)(d)1) thru Paragraph 5.B.(2)(d)6) again on the opposite horizontal stabilizer.

6. Inspection Results

A. A signal that is 50% (or more) of FSH is a sign of a possible crack and more analysis is necessary.

B. Compare the signal that occurs during the inspection to the signal that you get from the notch in the reference standard.

C. Conditions that can cause crack type signals are:

(1) A change in the distance from the fasteners to the aft edge of the chord. See if the equivalent location on the opposite horizontal stabilizer has the same distance. If the distance is the same, then compare the results from the two locations. If the distance is not the same, go to Paragraph 6.D. and do the open-hole eddy current inspection.

D. If you get a crack indication, do an open-hole eddy current inspection as specified in Part 6, 51-00-00, Procedure 16, to make sure there is a crack.

BOEING PROPRIETARY - Copyright © Unpublished Work - See title page for details

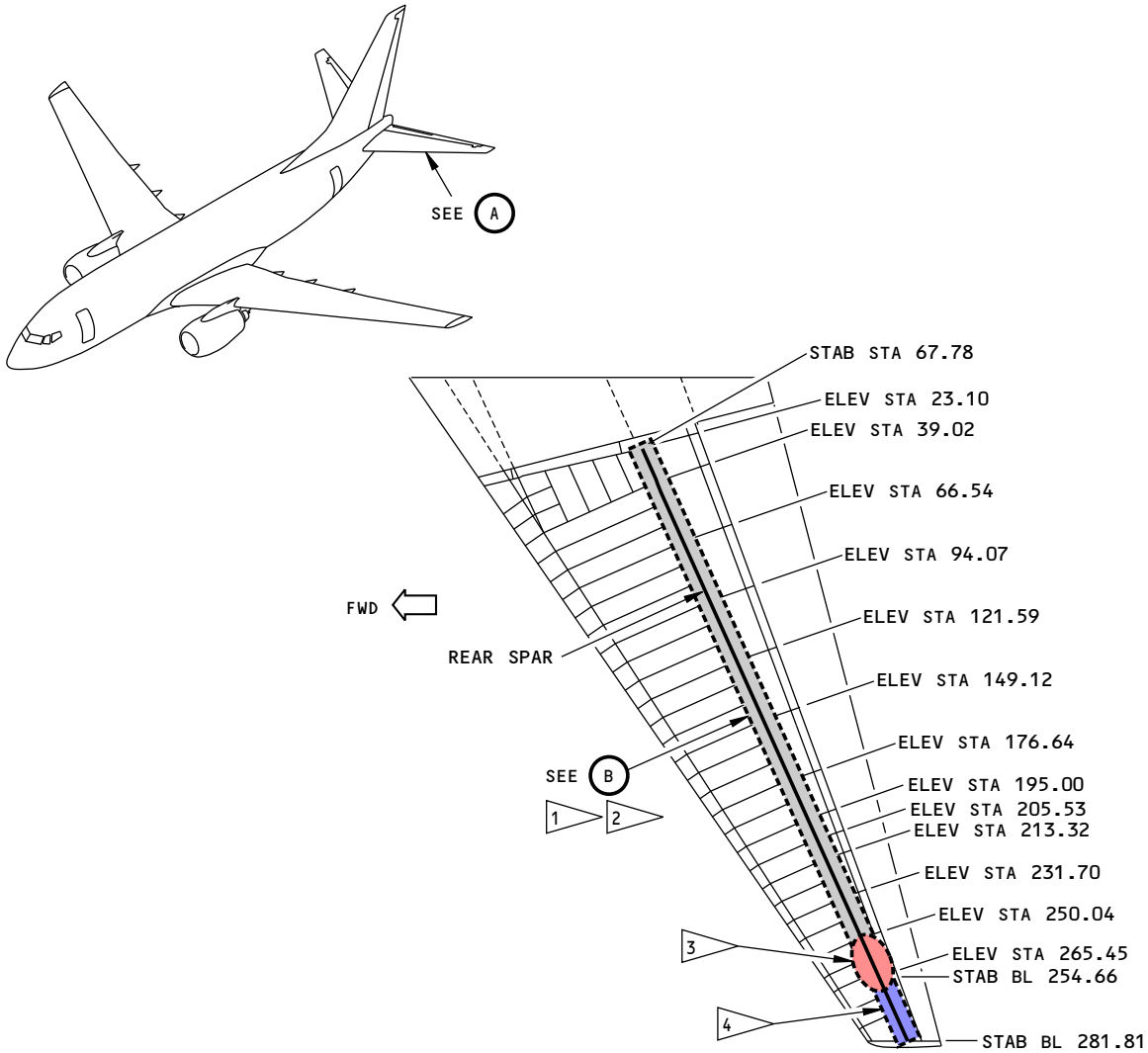

NOTES:

1. SEE VIEW "B" FOR THE INSPECTION AREAS OF THE FORWARD FLANGE (INSPAR SKIN SIDE) OF THE UPPER CHORD FROM STAB STA 67.78 TO STAB BL 281.81.
2. SEE VIEW "C" FOR THE INSPECTION AREAS OF THE AFT FLANGE (TRAILING EDGE PANEL SIDE) OF THE UPPER CHORD FROM ELEV STA 23.10 TO 250.04.
3. SEE VIEWS "F" AND "G" FOR THE INSPECTION AREAS OF THE AFT FLANGE (TRAILING EDGE PANEL SIDE) OF THE UPPER CHORD FROM ELEV STA 250.04 TO STAB BL 254.66.
4. SEE VIEW "H" FOR THE INSPECTION AREAS OF THE AFT FLANGE (TRAILING EDGE PANEL SIDE) OF THE UPPER CHORD FROM STAB BL 254.66 TO 281.81.

2488997 S0000585324_V1

Horizontal Stabilizer - Upper Chord of the Rear Spar Inspection Areas
Figure 1 (Sheet 1 of 6)

BOEING PROPRIETARY - Copyright © Unpublished Work - See title page for details

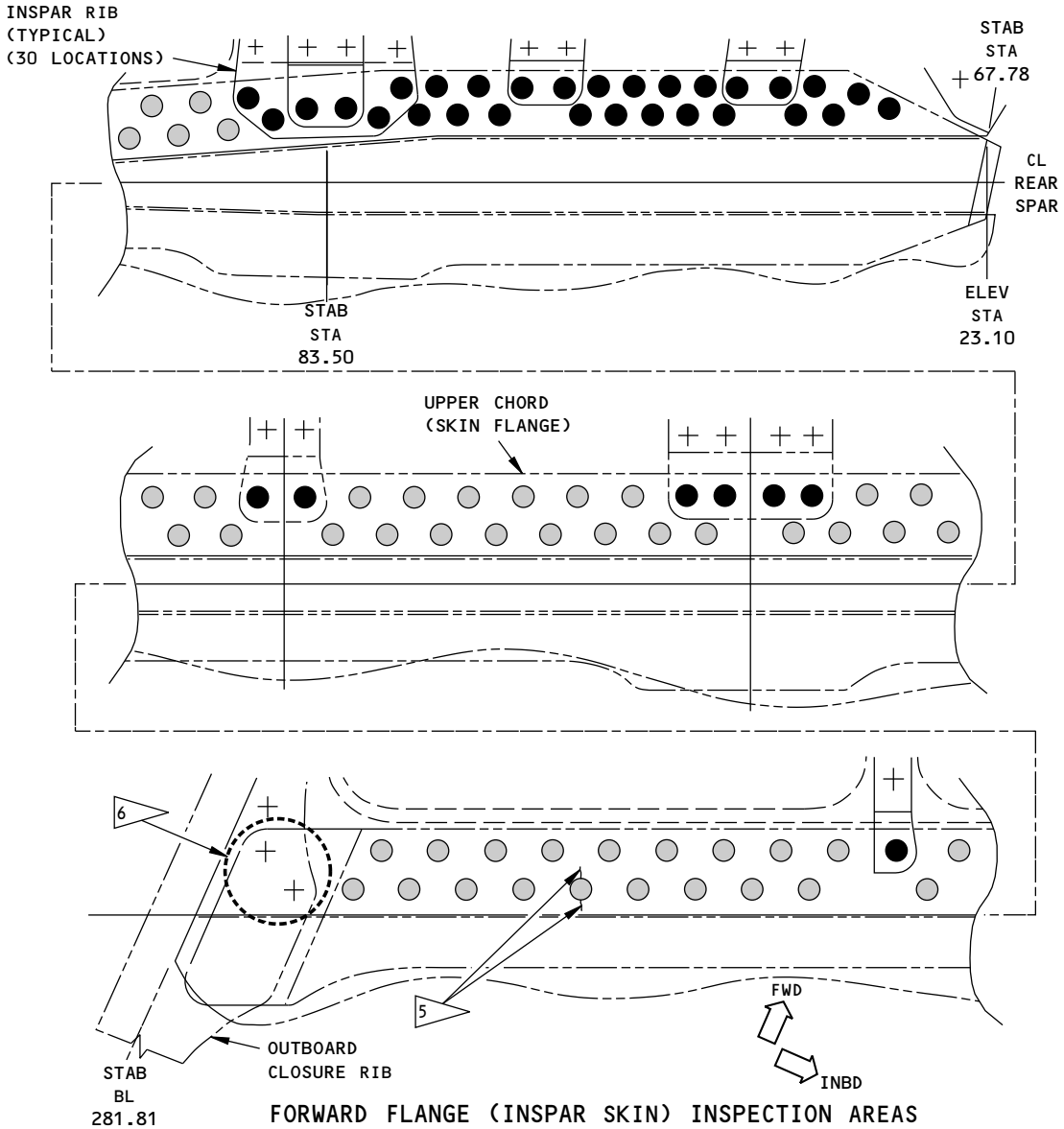

FORWARD FLANGE (INSPAR SKIN) INSPECTION AREAS
AT THE UPPER CHORD OF THE REAR SPAR

B

NOTES:

- ● TITANIUM FASTENER LOCATIONS TO BE EXAMINED THAT ATTACH THE INSPAR SKIN TO THE UPPER CHORD FROM STAB STA 67.78 TO STAB STA 83.50 AND AT ALL (13) INSPAR RIB TO THE UPPER CHORD LOCATIONS.
- ○ ALUMINUM FASTENER LOCATIONS TO BE EXAMINED THAT ATTACH THE INSPAR SKIN TO THE UPPER CHORD (BETWEEN RIB LOCATIONS).
- 5 TYPICAL CRACK DIRECTION AND ORIENTATION.
- 6 FASTENER LOCATIONS NOT EXAMINED WITH THIS PROCEDURE.

2489030 S0000585326_V1

Horizontal Stabilizer - Upper Chord of the Rear Spar Inspection Areas
Figure 1 (Sheet 2 of 6)

BOEING PROPRIETARY - Copyright © Unpublished Work - See title page for details

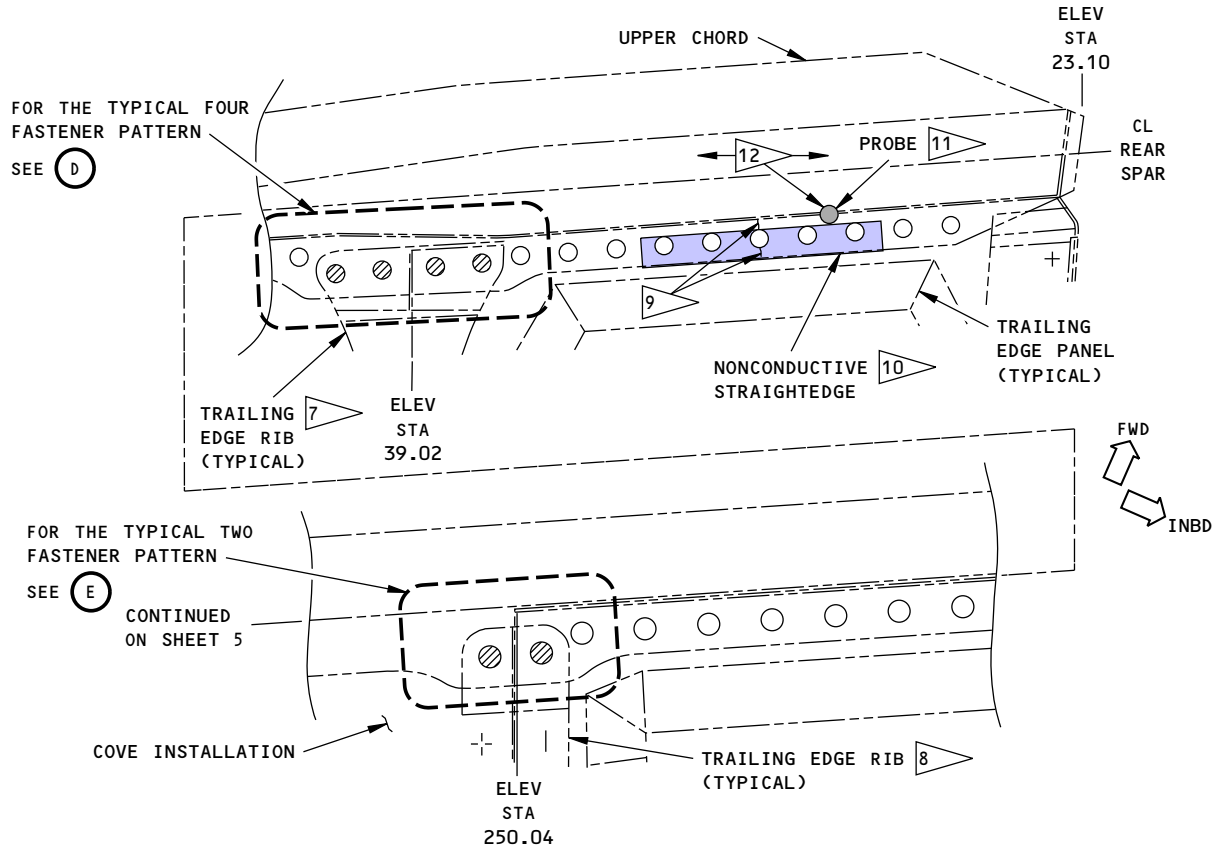

AFT FLANGE (TRAILING EDGE PANEL) INSPECTION
AREAS AT THE UPPER CHORD OF THE REAR SPAR

C

NOTES:

○ FASTENER LOCATIONS THAT ATTACH THE UPPER TRAILING EDGE PANELS AND COVE INSTALLATION TO THE UPPER CHORD.

⊘ FASTENER LOCATIONS THAT ARE HIDDEN BELOW THE EDGEBAND OF THE UPPER TRAILING EDGE PANELS THAT ATTACH THE TRAILING EDGE RIBS TO THE UPPER CHORD.

7 TRAILING EDGE RIBS WITH A FOUR FASTENER PATTERN. SEE TABLE I FOR THE ELEV STA LOCATIONS AND THE FASTENER DIAMETERS.

8 TRAILING EDGE RIBS WITH A TWO FASTENER PATTERN. SEE TABLE I FOR THE ELEV STA LOCATIONS AND THE FASTENER DIAMETERS.

9 TYPICAL CRACK DIRECTION AND ORIENTATION.

10 TYPICAL POSITION FOR THE STRAIGHTEDGE TO EXAMINE THE FORWARD SIDE OF THE FASTENER LOCATION FOR CRACKS. MAKE SURE THE FORWARD EDGE OF THE STRAIGHTEDGE IS ON THE FORWARD EDGE OF THE FASTENER AND ALIGNED WITH ALL FASTENER LOCATIONS TO BE EXAMINED. MOVE THE STRAIGHTEDGE FORWARD TO PUT THE AFT EDGE OF THE STRAIGHTEDGE ON THE AFT EDGE OF THE FASTENERS TO EXAMINE THE AFT SIDE OF THE FASTENER LOCATION FOR CRACKS.

11 PUT THE PROBE BETWEEN TWO FASTENER LOCATIONS AND AGAINST THE STRAIGHTEDGE TO BALANCE THE INSTRUMENT.

12 TYPICAL PROBE SCAN DIRECTION.

2489168 S0000585327_V1

Horizontal Stabilizer - Upper Chord of the Rear Spar Inspection Areas
Figure 1 (Sheet 3 of 6)

BOEING PROPRIETARY - Copyright © Unpublished Work - See title page for details

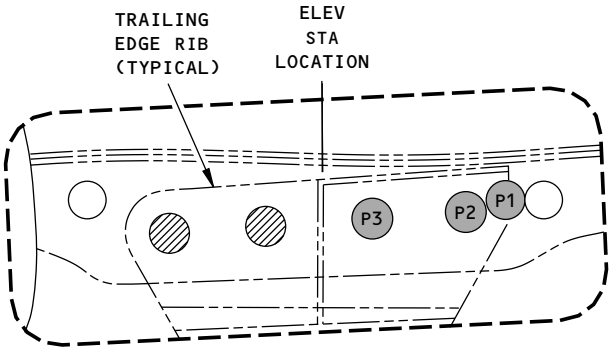

TYPICAL FOUR FASTENER PATTERN AT THE
TRAILING EDGE RIB LOCATIONS

D

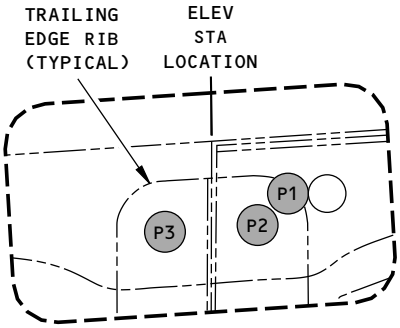

TYPICAL TWO FASTENER PATTERN AT THE
TRAILING EDGE RIB LOCATIONS

E

ELEV STA LOCATION	(NUMBER) AND DIAMETER OF FASTENERS	ELEV STA LOCATION	(NUMBER) AND DIAMETER OF FASTENERS	STAB BL LOCATION	(NUMBER) AND DIAMETER OF FASTENERS
39.02	(4) #8	195.00	(2) #6	254.66	(2) #6
66.54	(4) #8	205.53	(2) #5		
94.07	(2) #6	213.32	(2) #6		
121.59	(4) #8	231.70	(2) #6		
149.12	(2) #6	250.04	(2) #8		
176.64	(4) #6	265.45	(2) #6		

TABLE I

AFT FLANGE (TRAILING EDGE) INSPECTION AREAS
AT THE UPPER CHORD OF THE REAR SPAR

NOTES:

P1 THE TYPICAL PROBE POSITION TO BALANCE THE INSTRUMENT AT ALL TRAILING EDGE RIB LOCATIONS. MAKE SURE THE PROBE DOES NOT TOUCH THE FASTENER HEAD TO CAUSE AN EDGE EFFECT SIGNAL.

P2 THE TYPICAL PROBE POSITION ABOVE THE FASTENER LOCATION AND AT A POSITION TO GET A MAXIMUM FASTENER SIGNAL AS SHOWN IN FIGURE 5, DETAIL III FOR THE #6 FASTENER DIAMETERS AND DETAIL V FOR THE #8 FASTENER DIAMETERS. HOLD THE PROBE STILL AND MAKE A MARK ON THE PANEL AT THE FORWARD AND AFT EDGES OF THE PROBE TO IDENTIFY THE POSITION OF THE STRAIGHTEDGE.

P3 THE TYPICAL PROBE POSITION ABOVE THE ADJACENT RIB FASTENER LOCATION TO GET THE SAME MAXIMUM FASTENER SIGNAL AS AT P2. HOLD THE PROBE STILL AND MAKE A MARK ON THE PANEL AT THE FORWARD AND AFT EDGES OF THE PROBE TO IDENTIFY THE POSITION OF THE STRAIGHTEDGE.

2489186 S0000585328_V1

Horizontal Stabilizer - Upper Chord of the Rear Spar Inspection Areas
Figure 1 (Sheet 4 of 6)

BOEING PROPRIETARY - Copyright © Unpublished Work - See title page for details

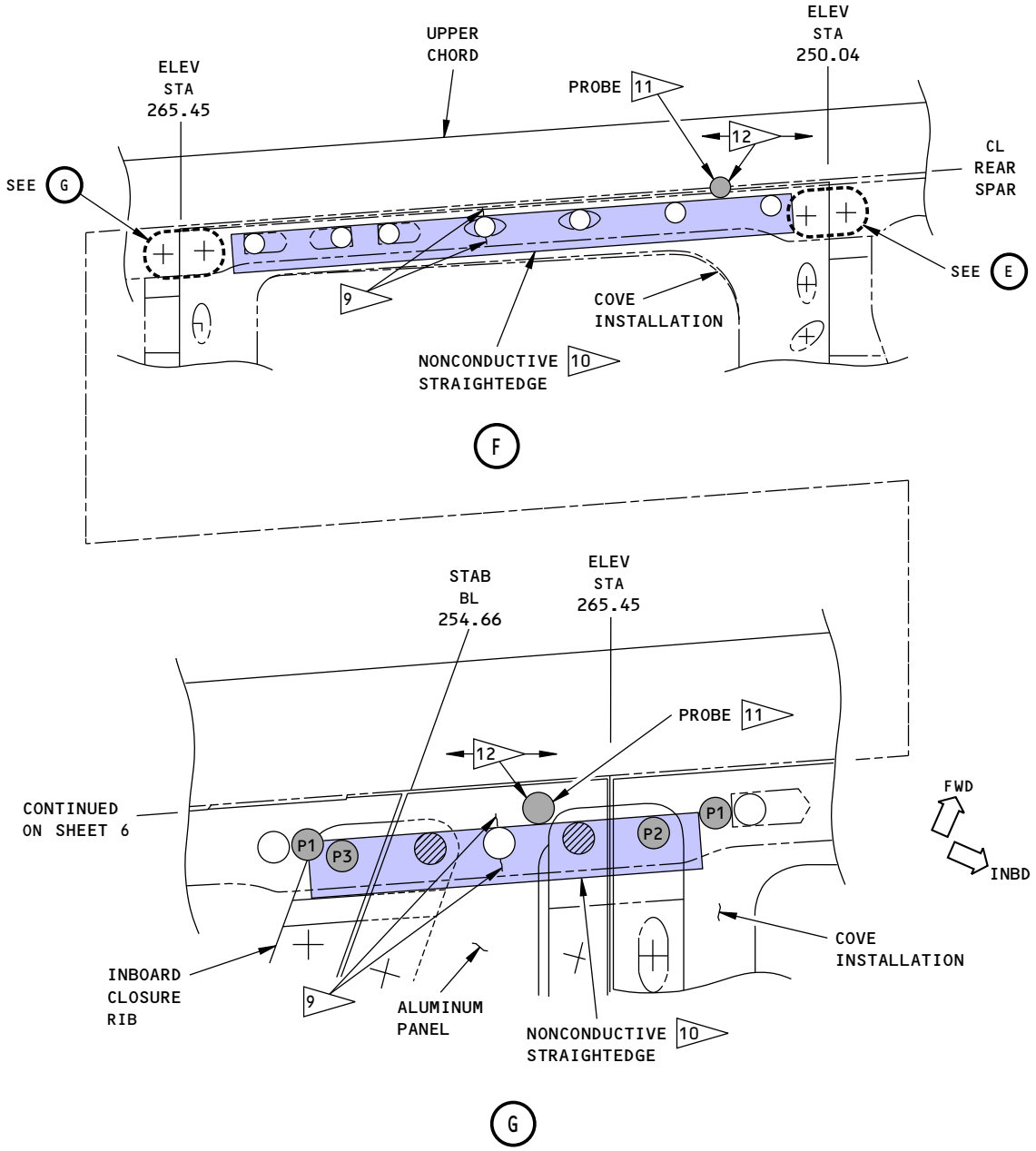

AFT FLANGE (TRAILING EDGE) INSPECTION AREAS
AT THE UPPER CHORD OF THE REAR SPAR

2489250 S0000585329_V1

Horizontal Stabilizer - Upper Chord of the Rear Spar Inspection Areas
Figure 1 (Sheet 5 of 6)

BOEING PROPRIETARY - Copyright © Unpublished Work - See title page for details

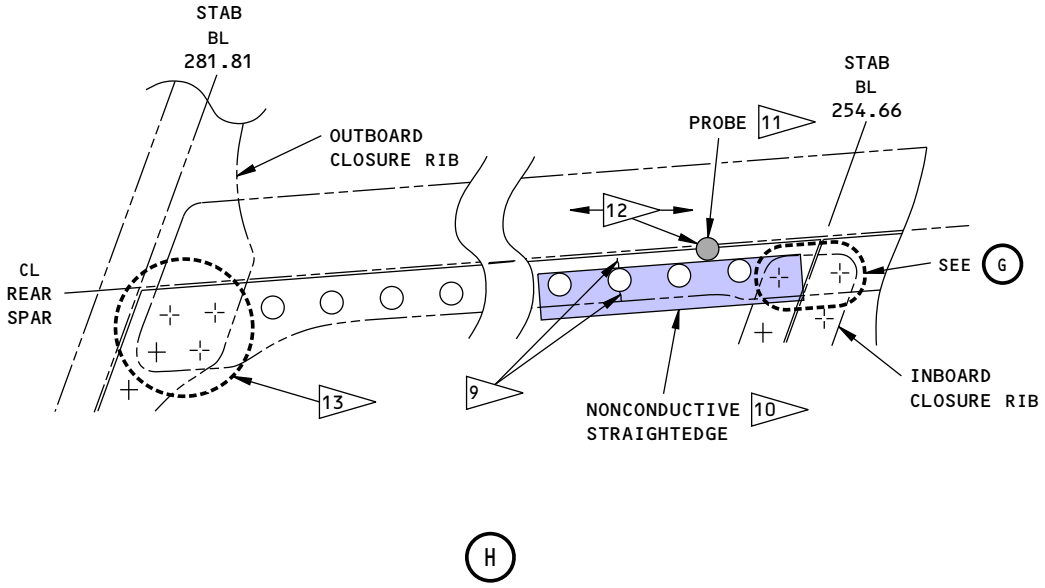

AFT FLANGE (TRAILING EDGE) INSPECTION AREAS
AT THE UPPER CHORD OF THE REAR SPAR

NOTES:

13 FASTENER LOCATIONS NOT EXAMINED WITH THIS PROCEDURE.

2492922 S0000585330_V1

Horizontal Stabilizer - Upper Chord of the Rear Spar Inspection Areas
Figure 1 (Sheet 6 of 6)

BOEING PROPRIETARY - Copyright © Unpublished Work - See title page for details

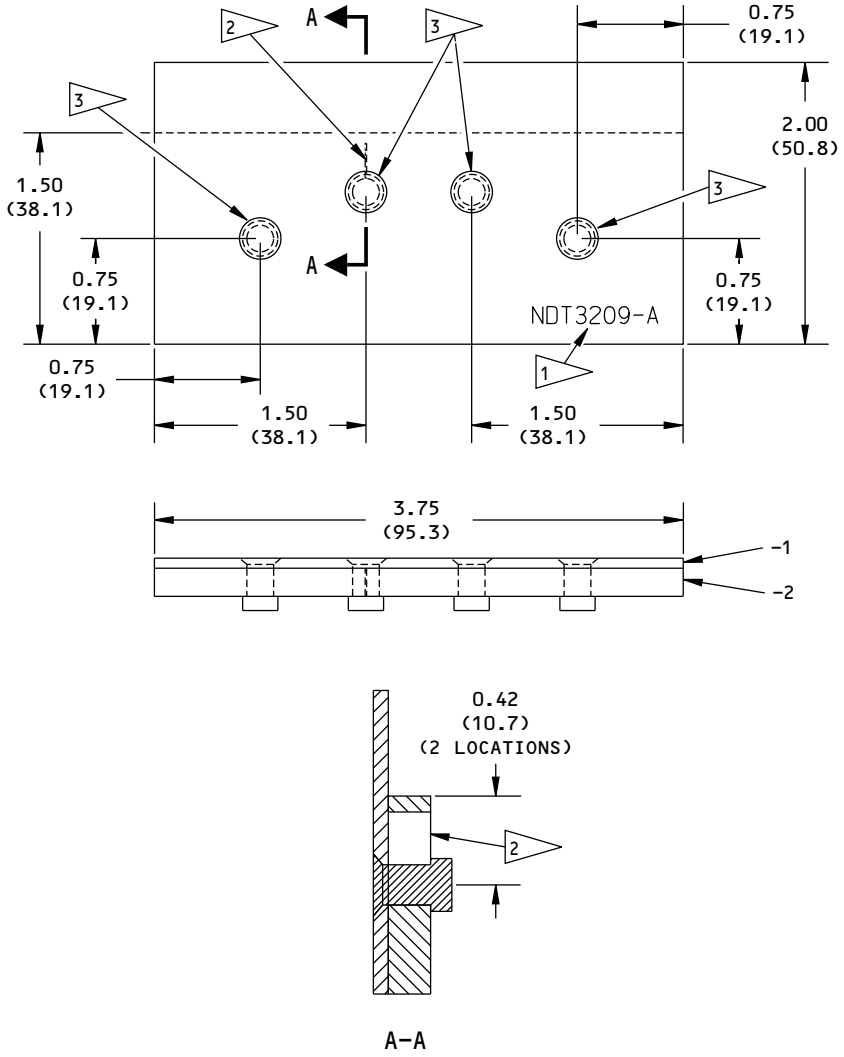

NOTES:

- ALL DIMENSIONS ARE IN INCHES (MILLIMETERS ARE IN PARENTHESES)
- TOLERANCE (UNLESS SPECIFIED DIFFERENTLY):

INCHES	MILLIMETERS
X.XXX = ±0.005	X.XX = ±0.10
X.XX = ±0.025	X.X = ±0.5
X.X = ±0.050	X = ±1

- SURFACE ROUGHNESS: 63 Ra OR BETTER
- MATERIAL: 2024-T3 OR T4 ALUMINUM (CLAD OR BARE)
- PARTS LIST:
  -1: 0.071 (1.80) X 2.00 (50.1) X 5.25 (133.4)
  -2: 0.200 (5.08) X 1.50 (38.1) X 5.25 (133.4)

1 ETCH OR ENGRAVE THE REFERENCE STANDARD NUMBER, NDT3209-A, AT APPROXIMATELY THIS LOCATION.

2 EDM NOTCH:
LENGTH: 0.250 (6.35)
DEPTH: THROUGH THE THICKNESS
WIDTH: 0.010 (2.54)

3 INSTALL BACR15GF6D5 RIVETS AT 4 LOCATIONS. SQUEEZE THE RIVETS TOGETHER ONLY TO HOLD THE -1 AND -2 PARTS TOGETHER. BE CAREFUL NOT TO DAMAGE THE -1 PART DURING RIVET INSTALLATION.

2496227 S0000585332_V1

Reference Standard NDT3209-A
Figure 2

BOEING PROPRIETARY - Copyright © Unpublished Work - See title page for details

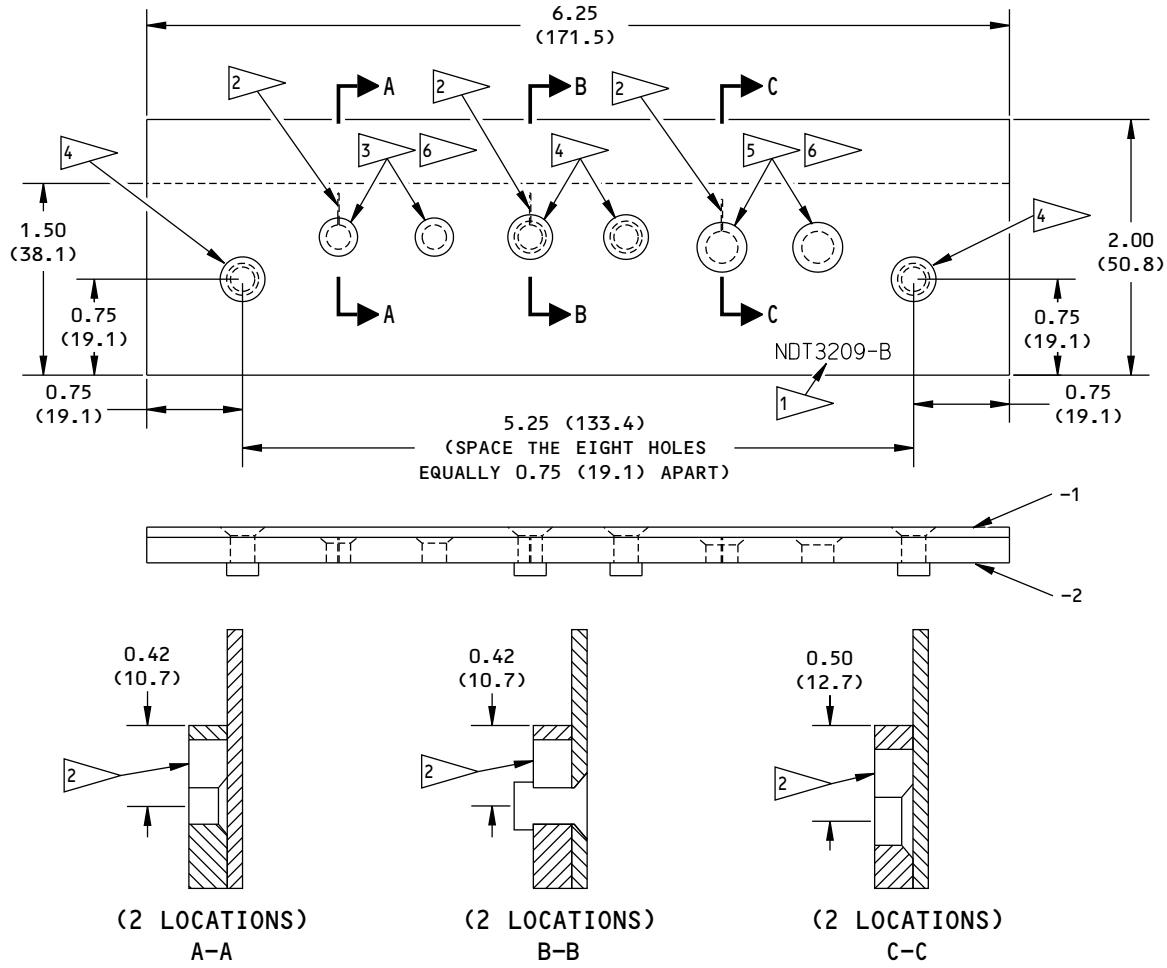

NOTES:

- ALL DIMENSIONS ARE IN INCHES (MILLIMETERS ARE IN PARENTHESES)
- TOLERANCE (UNLESS SPECIFIED DIFFERENTLY):

INCHES	MILLIMETERS
X.XXX = ±0.005	X.XX = ±0.10
X.XX = ±0.025	X.X = ±0.5
X.X = ±0.050	X = ±1

- SURFACE ROUGHNESS: 63 Ra OR BETTER
- MATERIAL: -1: CLEAR PLASTIC
  -2: 2024-T3 OR T4 (BARE)
- PARTS LIST:
  -1: 0.080 (2.03) X 2.00 (50.1) X 6.75 (171.5)
  -2: 0.200 (5.08) X 1.50 (38.1) X 6.75 (171.5)

1 ETCH OR ENGRAVE THE REFERENCE STANDARD NUMBER, NDT3209-B, AT APPROXIMATELY THIS LOCATION.

2 EDM NOTCH:
LENGTH: 0.250 (6.35)
DEPTH: THROUGH THE THICKNESS
WIDTH: 0.010 (2.54)

3 DRILL A 0.190 (4.83) DIAMETER HOLE AND MACHINE A 100° COUNTERSINK TO A DEPTH OF 0.046 (1.17) ±0.002 (0.05) IN THE -2 PART ONLY.

4 INSTALL BACR15BA6AD5 RIVETS AT 4 LOCATIONS. SQUEEZE THE RIVETS TOGETHER ONLY TO HOLD THE -1 AND -2 PARTS TOGETHER. BE CAREFUL NOT TO DAMAGE THE -1 PART.

5 DRILL A 0.250 (6.35) DIAMETER HOLE AND MACHINE A 100° COUNTERSINK TO A DEPTH OF 0.059 (1.50) ±0.002 (0.05) IN THE -2 PART ONLY.

6 ETCH OR SCRIBE A CIRCLE ON THE TOP SURFACE OF THE -1 PART THAT IS THE SAME DIAMETER AND LOCATION AS THE COUNTERSINK IN THE -2 PART.

2497993 S0000585334_V1

Reference Standard NDT3209-B
Figure 3

BOEING PROPRIETARY - Copyright © Unpublished Work - See title page for details

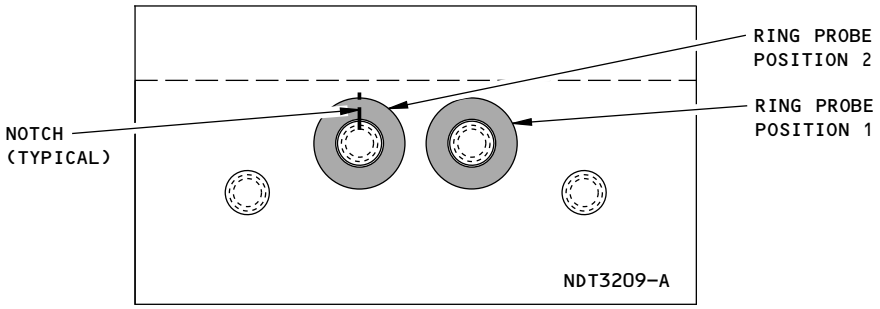

RING PROBE POSITIONS ON THE REFERENCE STANDARD
DETAIL I

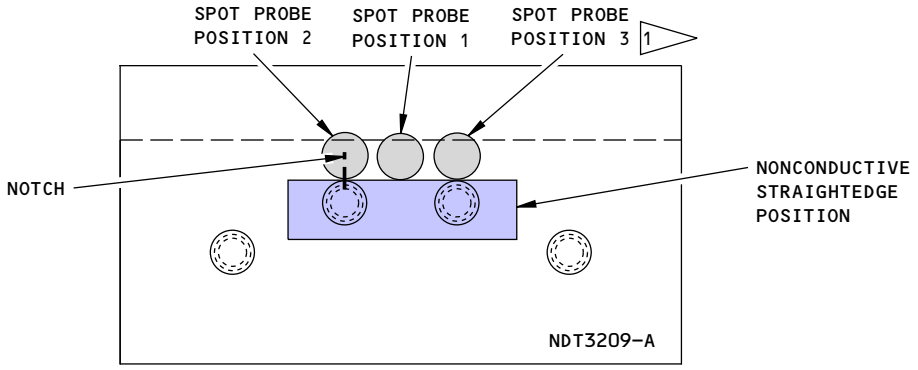

SPOT PROBE POSITIONS ON THE REFERENCE STANDARD
DETAIL II

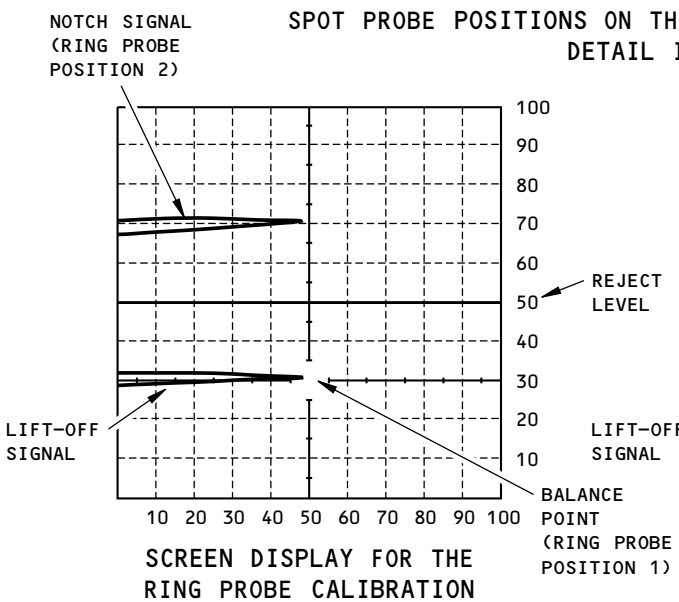

SCREEN DISPLAY FOR THE
RING PROBE CALIBRATION
DETAIL III

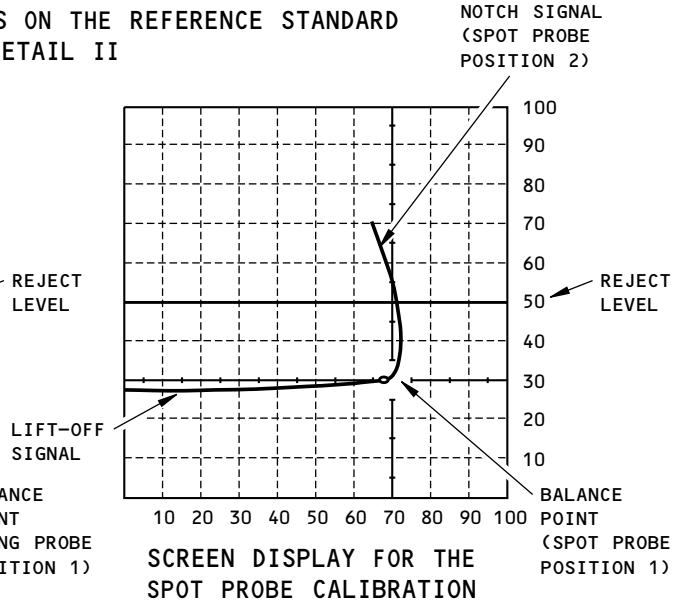

SCREEN DISPLAY FOR THE
SPOT PROBE CALIBRATION
DETAIL IV

NOTES:

1 A SIGNAL FROM THE EDGE OF THE FASTENER HEAD WILL BE IN LINE WITH THE SIGNAL FROM THE NOTCH. MAKE SURE THE SIGNAL HEIGHT IS BETWEEN 5 AND 10% OF FSH.

2498959 S0000585336_V1

Instrument Calibration on Reference Standard NDT3209-A
Figure 4

BOEING PROPRIETARY - Copyright © Unpublished Work - See title page for details

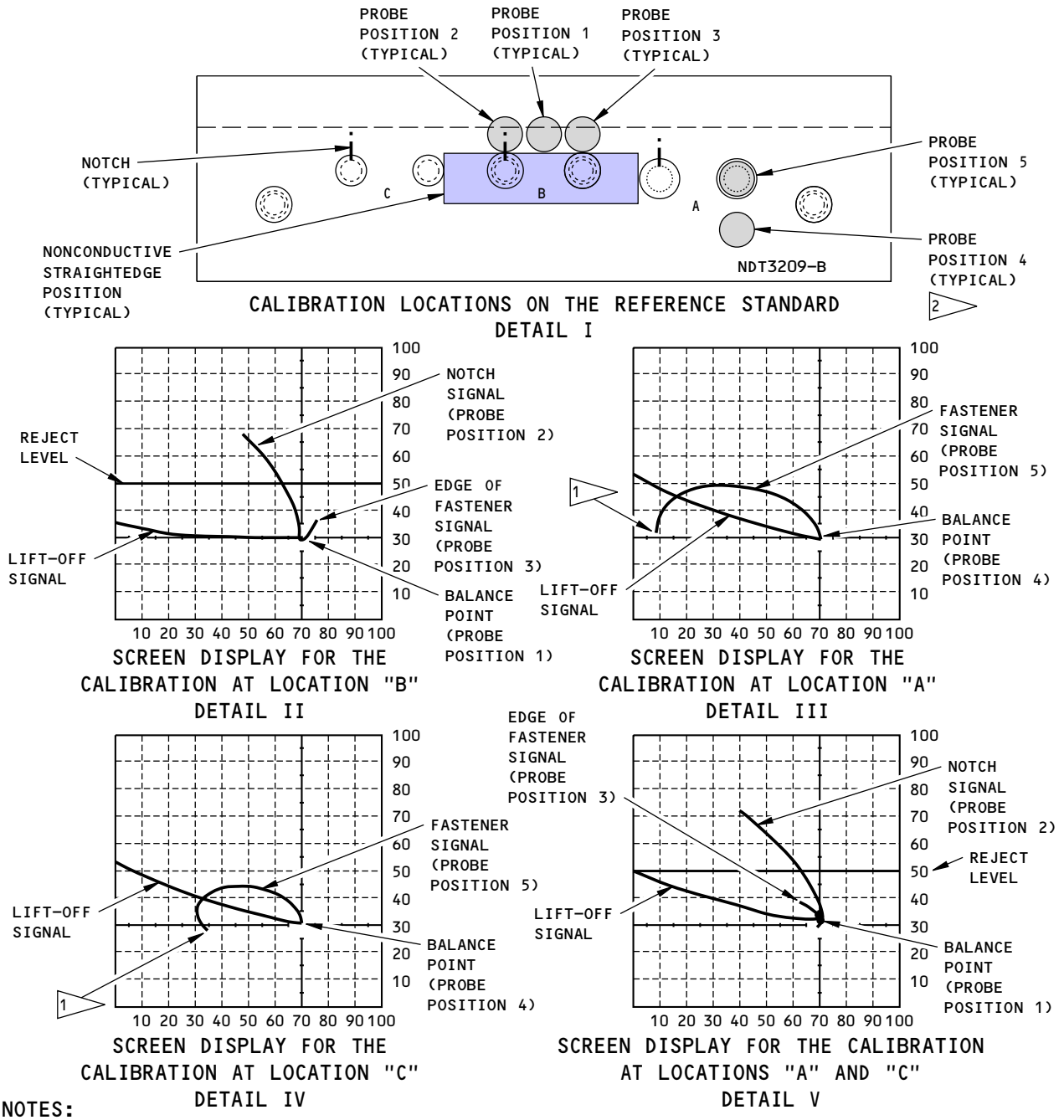

NOTES:

- THE SCREEN DISPLAYS SHOWN IN DETAILS II THRU V ARE EXAMPLES AND CAN LOOK DIFFERENT WITH YOUR PROBE AND INSTRUMENT.

1 MAXIMUM END POINT OF THE FASTENER SIGNAL WHEN THE PROBE IS AT THE CENTER OF THE FASTENER.

2 THE LOCATION OF PROBE POSITION 4 IS APPROXIMATELY BETWEEN THE FASTENER HOLE AND THE EDGE OF THE REFERENCE STANDARD.

2499011 S0000585337_V1

Instrument Calibration on Reference Standard NDT3209-B
Figure 5

BOEING PROPRIETARY - Copyright © Unpublished Work - See title page for details

PART 6 - EDDY CURRENT

HORIZONTAL STABILIZER - WEB FLANGES OF THE UPPER AND LOWER CHORDS OF THE REAR SPAR (HFEC)

1. Purpose

A. Use this high frequency eddy current (HFEC) procedure to examine the web flanges of the upper and lower chords for cracks at the rear spar of the horizontal stabilizer. See Figure 1 for the inspection area.

B. This procedure uses an impedance plane display instrument.

C. The upper and lower chords are aluminum.

D. 737 Maintenance Planning Data (MPD) Damage Tolerance Rating (DTR) Check Form Reference:

(1) Item: 55-10-04-8

(2) Item: 55-10-04-13C

2. Equipment

A. General

(1) Use inspection equipment that can be calibrated on the reference standard as specified in Part 6, 51-00-00, Procedure 23, paragraph 5.

(2) Refer to Part 1, 51-01-00, for data about the equipment manufacturers.

B. Instrument

(1) The instruments that follow were used to help prepare this procedure.

(a) 500D; Olympus NDT

(b) Phasec 2D/3D; GE Inspection Technologies

(c) Nortec 600D; Olympus NDT

C. Probes

(1) The probe that follows was used to help prepare this procedure.

(a) PAB45605; EC NDT

D. Reference Standard

(1) Use reference standard 126, or an equivalent, to help calibrate the instrument. See Part 6, 51-00-00, Procedure 23, for data about reference standard 126

3. Prepare for the Inspection

A. Remove the access panels shown in Figure 1 to get access to the forward side of the rear spar of the horizontal stabilizer from STAB STA 310.54 to STAB BL 281.81.

B. Identify the inspection areas shown in Figure 1 on the forward side of the rear spar.

C. Remove fillet sealant as necessary.

D. Remove paint only if it is loose.

4. Instrument Calibration

A. Calibrate the instrument as specified in Part 6, 51-00-00, Procedure 23, paragraph 5.

BOEING PROPRIETARY - Copyright © Unpublished Work - See title page for details

5. **Inspection Procedure**

A. Examine the web flange of the upper and lower chords of the rear spar for cracks. Examine the areas shown in Figure 1 as specified in Part 6, 51-00-00, Procedure 23, paragraph 6.

(1) Make a scan of the web flange along the edge of the web from STAB STA 310.54 to STAB BL 281.81 (stab tip). Use the edge of the web as a probe guide.

B. Do Paragraph 5.A. again to examine the upper and lower chords of the rear spar for cracks on the opposite horizontal stabilizer.

6. **Inspection Results**

A. A crack signal will look almost the same as the notch signal from the reference standard.

(1) Refer to Part 6, 51-00-00, Procedure 23, paragraph 7, for instructions to help make an analysis of the indications that occur during the inspection.

BOEING PROPRIETARY - Copyright © Unpublished Work - See title page for details

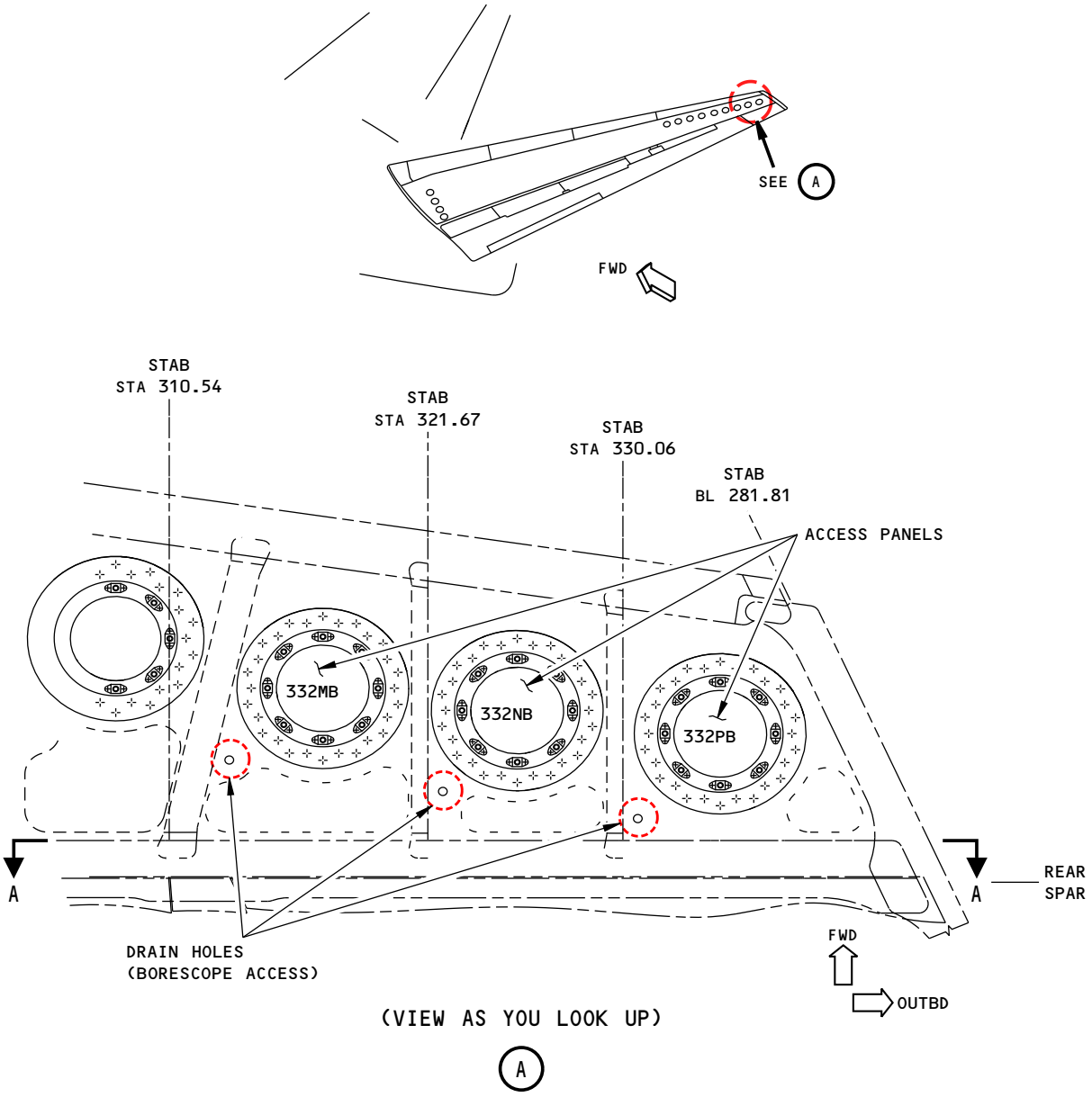

NOTES

- THE LEFT HORIZONTAL STABILIZER IS SHOWN; THE RIGHT HORIZONTAL STABILIZER IS THE SAME

2431447 S0000563004_V1

Inspection Area
Figure 1 (Sheet 1 of 2)

BOEING PROPRIETARY - Copyright © Unpublished Work - See title page for details

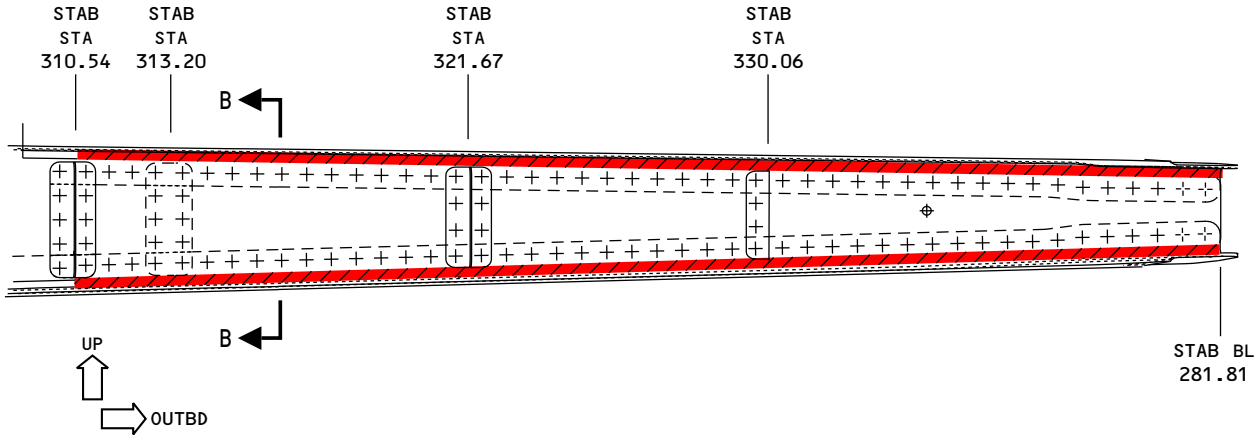

VIEW AS YOU LOOK AFT INSIDE THE HORIZONTAL STABILIZER

A-A

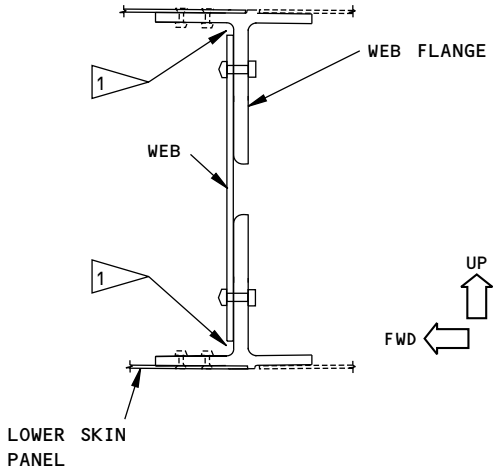

B-B

NOTES

INSPECTION AREA

1 MAKE A SCAN TO EXAMINE THE WEB FLANGES OF THE UPPER AND LOWER CHORDS OF THE REAR SPAR FOR CRACKS FROM STAB STA 310.54 TO THE STAB TIP (STAB BL 281.81). USE THE EDGE OF THE WEB AS A PROBE GUIDE.

2431473 S0000563005_V1

Inspection Area
Figure 1 (Sheet 2 of 2)

BOEING PROPRIETARY - Copyright © Unpublished Work - See title page for details

HORIZONTAL STABILIZER - UPPER AND LOWER REAR SPAR CHORDS AND HINGE SUPPORT RIB CHORDS AT ELEV STA 121.59 AND 213.32 (LFEC)

1. Purpose

A. Use this low frequency eddy current (LFEC) procedure to find cracks in the upper and lower rear spar chords and the hinge support rib chords of the horizontal stabilizer at ELEV STA 121.59 (hinge 4) and 213.32 (hinge 6). See Figure 1 for the inspection areas.

B. This procedure examines all 737-100 thru -500 airplanes. The configuration of the horizontal stabilizer is different between the 737-100/200 and the 737-300 thru -500 airplanes. The inspection areas at ELEV STA 121.59 (hinge 4) are the same for the 737-100 thru -500 airplanes. The inspection areas at ELEV STA 213.32 (hinge 6) are different between the 737-100/-200 and the 737-300 thru -500 airplanes. See Figure 1 for the hinge 4 and 6 configurations and inspection areas.

C. Use this procedure to examine the upper and lower rear spar chords and the hinge support rib chords of the horizontal stabilizer for cracks that can occur at the fastener locations. The areas to be examined are as follows:

(1) The forward and aft skin flanges of the upper and lower rear spar chords at ELEV STA 121.59 (hinge 4) for the 737-100 thru -500 airplanes. See Figure 1, View C, flagnote 3.

(a) Six number 6 fastener diameter locations, identified as "∗", where the inspar skin attaches to the forward flange of the rear spar chord.

NOTE: The fastener code "∗" in Figure 1 identifies two possible fastener codes as a function of the inspar skin material. The inspar skin is typically aluminum but some 737-200 airplanes have a graphite inspar skin. Make sure to identify the material of the inspar skinbecause the instrument calibration and inspection instructions that you will follow are a function of the inspar skin material.

(b) Two number 8 diameter fastener locations, identified as "A", and two number 6 diameter fastener locations, identified as "B", where the gusset plate attaches to the aft flange of the rear spar chord.

(2) The upper and lower skin flanges of the hinge support rib at ELEV STA121.59 (hinge 4) for the 737-100 thru -500 airplanes. Four number 6 diameter fastener locations, identified as "B", where the gusset plate attaches to the skin flange of the hinge support rib of the trailing edge. See Figure 1, View C, flagnote 4.

(3) The forward and aft skin flanges of the upper and lower rear spar chords at ELEV STA 213.32 (hinge 6) for the 737-300 thru -500 airplanes. See Figure 1, View D, flagnote 3.

(a) Four number 6 diameter fastener locations, identified as "D ", where the inspar skin attaches to the forward flange of the rear spar chord.

(b) Two number 8 diameter fastener locations, identified as "A", where the gusset plate attaches to the aft flange of the rear spar chord.

(4) The upper and lower skin flanges of the hinge support rib at ELEV STA 213.32 (hinge 6) for the 737-300 thru -500 airplanes. Two number 8 diameter fastener locations, identified as "A", where the gusset plate attaches to the skin flange of the hinge support rib of the trailing edge. See Figure 1, View D, flagnote 4.

(5) The upper and lower skin flanges of the hinge support rib at ELEV STA 213.32 (hinge 6) for the 737-100/200 airplanes only.

BOEING PROPRIETARY - Copyright © Unpublished Work - See title page for details

(a) Five number 6 diameter fastener locations, identified as code "∗", where the inspar skin attaches to the skin flange of the hinge support rib. See Figure 1, View E, flagnote 5.

NOTE: The fastener code "∗" in Figure 1 identifies two possible fastener codes as a function of the inspar skin material. The inspar skin is typically aluminum but some 737-200 airplanes have a graphite composite inspar skin. Make sure to identify the material of the inspar skin because the instrument calibration and inspection instructions that you will follow are a function of the inspar skin material.

NOTE: The rear spar chords are not examined at this location.

(b) Four number 6 diameter fastener locations, identified as code "C", where the trailing edge skin that is fiberglass composite attaches to the skin flange of the hinge support rib. See Figure 1, View E, flagnote 6.

D. This procedure uses two reflection ring probes and an impedance plane display instrument. Go to Paragraph 2.C. for the probes to be used.

E. This procedure uses two reference standards. One reference standard, NDT3249, is shown in Figure 2 and is used to examine the fastener locations at the rear spar chord. The other reference standard, NDT3250, is shown in Figure 3 and is used to examine the fastener locations at the hinge support rib.

F. Service Bulletin Reference: 737-55A1099

2. Equipment

A. General

(1) Use inspection equipment that can be calibrated on the reference standard as specified in Paragraph 4.

(2) Refer to Part 1, 51-01-00, for data about the equipment manufacturers.

B. Instrument

(1) Use an eddy current instrument that:

(a) Has an impedance plane display.

(b) Operates at frequencies between 1 and 8 kHz.

(c) Can be calibrated as specified in the calibration instructions of this procedure.

(2) The instruments that follow were used to help prepare this procedure.

(a) Nortec 2000D, Nortec 500; Olympus NDT

(b) Phasec 2d, 3d; GE Inspection Technologies

C. Probes

(1) Use a reflection ring probe that:

(a) Operates at a frequency between 1 and 10 kHz,

(b) Has the properties that follow when used to examine the number 6 fastener diameter locations:

1) Has a minimum inner diameter of 0.32 inch (8.1 mm).

2) Has a maximum outer diameter of 0.65 inch (16.5 mm).

(c) Has the properties that follow when used to examine the number 8 fastener diameter locations:

1) Has a minimum inner diameter of 0.40 inch (10.2 mm).

2) Has a maximum outer diameter of 0.70 inch (17.8 mm).

BOEING PROPRIETARY - Copyright © Unpublished Work - See title page for details

(2) The probes that follow were used to help prepare this procedure.

NOTE: Other probes can be used if they can be calibrated with the reference standard specified in Paragraph 2.C.

NOTE: Shielded probes are recommended.

(a) For the number 6 fastener diameter locations:

1) AF-4068; AeroFab NDT

2) TEK-4067; Techna NDT

(b) For the number 8 fastener diameter locations:

1) AF-4081; AeroFab NDT

2) RDP.67-.4/2K; Techna NDT

D. Reference Standards

(1) Use reference standard NDT3249 to help calibrate the instrument to examine the fastener locations at the rear spar chord. See Figure 2 for the reference standard drawing.

(2) Use reference standard NDT3250 to help calibrate the instrument to examine the fastener locations at the hinge support rib. See Figure 3 for the reference standard drawing.

3. Prepare for the Inspection

A. Identify the inspection areas shown in Figure 1.

B. Clean the inspection area.

(1) Remove paint as necessary to see the fastener heads.

4. Instrument Calibration

A. Calibrate the instrument as specified in Paragraph 4.B. to examine the fastener locations in the upper and lower rear spar chords that are identified in paragraphs Paragraph 1.C.(1) and Paragraph 1.C.(3). Calibrate the instrument as specified in Paragraph 4.C. to examine the fastener locations in the upper and lower skin flanges of the hinge support rib that are identified in Paragraph 1.C.(2), Paragraph 1.C.(4) and Paragraph 1.C.(5).

B. Calibrate the instrument to examine the fastener locations in the upper and lower rear spar chords that are identified in Paragraph 1.C.(1) and Paragraph 1.C.(3) as follows:

(1) Calibrate the instrument to examine the code “A” number 8 diameter fastener locations, as follows:

(a) Set the instrument frequency between 1.0 and 1.5 kHz.

(b) Connect a probe to the instrument that has the properties identified in paragraph Paragraph 2.C.(1)(c).

(c) Put a nonconductive shim on the reference standard. The thickness of the shim must be equivalent (±0.003 inch (0.08 mm)) to the paint thickness on the airplane.

(d) Put the probe at calibration location “A” of reference standard NDT3249 at probe position 1 (the fastener location without a notch) as shown in Figure 4, Detail I. Make sure the center of the probe is above the center of the fastener.

(e) Balance the instrument.

(f) Set the balance point at approximately 30% of full screen height (FSH) and 50% of full screen width (FSW) as shown in Figure 4, Detail II.

BOEING PROPRIETARY - Copyright © Unpublished Work - See title page for details

(g) Tilt the probe and adjust the instrument phase control to make the lift-off signal move from right to left as shown Figure 4, Detail II.

(h) Put the probe on the reference standard at probe position 2 (the fastener location with a notch) as shown in Figure 4, Detail I. Make sure the center of the probe is above the center of the fastener.

(i) Adjust the instrument sensitivity to put the notch signal at 70% of FSH as shown in Figure 4, Detail II. If necessary, use a vertical gain that is higher than the horizontal gain to get the signal to look almost the same as shown in Detail II.

(j) Do Paragraph 4.B.(1)(d) thru Paragraph 4.B.(1)(h) again to make sure the calibration is correct. Make adjustments to the instrument gain if the calibration is not correct.

(2) Calibrate the instrument to examine the code “B” number 6 diameter fastener locations as follows:

(a) Do Paragraph 4.B.(1)(b) thru Paragraph 4.B.(1)(j), but use a probe that has the properties identified in Paragraph 2.C.(1)(b) and use calibration location “B” on the reference standard.

(3) Calibrate the instrument to examine the code “∗” number 6 diameter fastener locations identified in Figure 1, View C, if the inspar skin is graphite composite as follows:

(a) Set the instrument frequency between 8 and 10 kHz.

(b) Connect a probe to the instrument that has the properties identified in paragraph Paragraph 2.C.(1)(b).

(c) Put a nonconductive shim on the reference standard. The thickness of the shim must be equivalent (±0.003 inch (0.08 mm)) to the paint thickness on the airplane.

(d) Put the probe at calibration location “C” of reference standard NDT3249 at probe position 1 (the fastener location without a notch) as shown in Figure 4, Detail I. Make sure the center of the probe is above the center of the fastener.

(e) Balance the instrument.

(f) Set the balance point at approximately 30% of full screen height (FSH) and 70% of full screen width (FSW) as shown in Figure 4, Detail III.

(g) Tilt the probe and adjust the instrument phase control to make the lift-off signal move from right to left as shown Figure 4, Detail III.

(h) Put the probe at calibration location “C” of reference standard NDT3249 at probe position 2 (the fastener location with a notch) as shown in Figure 4, Detail I. Make sure the center of the probe is above the center of the fastener.

(i) Adjust the instrument sensitivity to put the notch signal at 70% of FSH as shown in Figure 4, Detail III. Use a vertical gain that is higher than the horizontal gain to get the signal to look almost the same as shown in Detail III.

(j) Do Paragraph 4.B.(3)(d) thru Paragraph 4.B.(3)(h) again to make sure the calibration is correct. Make adjustments to the instrument gain if the calibration is not correct.

(4) Calibrate the instrument to examine the code “∗” and “D” number 6 diameter fastener locations identified in Figure 1, Views C and D, if the inspar skin is aluminum as follows:

(a) Set the instrument frequency between 2 and 3 kHz.

(b) Do Paragraph 4.B.(1)(b) thru Paragraph 4.B.(1)(j), but use a probe that has the properties identified in Paragraph 2.C.(1)(b) and use calibration location “D” on the reference standard.

C. Calibrate the instrument to examine the fastener locations at the upper and lower skin flanges of the hinge support rib that are identified in Paragraph 1.C.(2), Paragraph 1.C.(4) and Paragraph 1.C.(5) as follows:

BOEING PROPRIETARY - Copyright © Unpublished Work - See title page for details

(1) Calibrate the instrument to examine the code “A” number 8 diameter fastener locations as follows:

(a) Set the instrument frequency between 1.0 and 1.5 kHz.

(b) Connect a probe to the instrument that has the properties identified in Paragraph 2.C.(1)(c).

(c) Put a nonconductive shim on the reference standard. The thickness of the shim must be equivalent (±0.003 inch (0.08 mm)) to the paint thickness on the airplane.

(d) Put the probe at calibration location “A” of reference standard NDT3250 at probe position 1 (the fastener location without a notch) as shown in Figure 5, Detail I. Make sure the center of the probe is above the center of the fastener.

(e) Balance the instrument.

(f) Set the balance point at approximately 30% of full screen height (FSH) and 50% of full screen width (FSW) as shown in Figure 5, Detail II.

(g) Tilt the probe and adjust the instrument phase control to make the lift-off signal move from right to left as shown Figure 5, Detail II.

(h) Put the probe at calibration location “A” of reference standard NDT3250 at probe position 2 (the fastener location with a notch) as shown in Figure 5, Detail I. Make sure the center of the probe is above the center of the fastener.

(i) Adjust the instrument sensitivity to put the notch signal at 70% of FSH as shown in Figure 5, Detail II. If necessary, use a vertical gain that is higher than the horizontal gain to get the signal to look almost the same as shown in Detail II.

(j) Do Paragraph 4.C.(1)(d) thru Paragraph 4.C.(1)(h) again to make sure the calibration is correct. Make adjustments to the instrument gain if the calibration is not correct.

(2) Calibrate the instrument to examine the code “B” number 6 diameter fastener locations as follows:

(a) Do Paragraph 4.C.(1)(b) thru Paragraph 4.C.(1)(j), but use a probe that has the properties identified in Paragraph 2.C.(1)(b) and use calibration location “B” on the reference standard.

(3) Calibrate the instrument to examine the code “∗” and “C” number 6 diameter fastener locations identified in Figure 1, View E, if the inspar skin is graphite composite as follows:

(a) Set the instrument frequency between 8 and 10 kHz.

(b) Connect a probe to the instrument that has the properties identified in Paragraph 2.C.(1)(b).

(c) Put a nonconductive shim on the reference standard. The thickness of the shim must be equivalent (±0.003 inch (0.08 mm)) to the paint thickness on the airplane.

(d) Put the probe at calibration location “C” of reference standard NDT3250 at probe position 1 (the fastener location without a notch) as shown in Figure 5, Detail I. Make sure the center of the probe is above the center of the fastener.

(e) Balance the instrument.

(f) Set the balance point at approximately 30% of full screen height (FSH) and 70% of full screen width (FSW) as shown in Figure 5, Detail III.

(g) Tilt the probe and adjust the instrument phase control to make the lift-off signal move from right to left as shown Figure 5, Detail III.

(h) Put the probe at calibration location “C” of reference standard NDT3250 at probe position 2 (the fastener location with a notch) as shown in Figure 5, Detail I. Make sure the center of the probe is above the center of the fastener.

BOEING PROPRIETARY - Copyright © Unpublished Work - See title page for details

(i) Adjust the instrument sensitivity to put the notch signal at 70% of FSH as shown in Figure 5, Detail III. Use a vertical gain that is higher than the horizontal gain to get the signal to look almost the same as shown in Detail III.

(j) Do Paragraph 4.C.(3)(d) thru Paragraph 4.C.(3)(h) again to make sure the calibration is correct. Make adjustments to the instrument gain if the calibration is not correct.

(4) Calibrate the instrument to examine the code "∗" number 6 diameter fastener locations identified in Figure 1, View E, if the inspar skin is aluminum as follows:

(a) Set the instrument frequency between 2 and 3 kHz.

(b) Do Paragraph 4.C.(1)(b) thru Paragraph 4.C.(1)(j), but use a probe that has the properties identified in Paragraph 2.C.(1)(b) and use calibration location "D" on the reference standard.

5. Inspection Procedure

A. Examine the upper and lower rear spar chords for cracks at the fastener locations identified in Paragraph 1.C.(1) and Paragraph 1.C.(3) as follows:

(1) Examine the code "A" number 8 diameter fastener locations as follows:

(a) Calibrate the instrument as specified in Paragraph 4.B.(1).

(b) Put the probe at one of the fastener locations with the center of the probe above the center of the fastener and balance the instrument.

(c) Put the probe at a different fastener location (that has the same code) and monitor the signal as follows:

1) If the signal is between 0 and 50% of FSH, examine the remaining fastener locations that are the same code.

2) If the signal is above 50% of FSH, put the probe at a different fastener location (that has the same code) at a different ELEV STA location and monitor the screen display for the signal to occur. If the signal at the two fastener locations are almost the same, balance the instrument and examine the remaining fastener locations that are the same code.

NOTE: Small changes in the hole to edge distance (edge margin) can cause the balance point to move.

NOTE: The edge of a shim (if used in the inspection area) can cause the balance point to move up if the edge of the shim is near the probe.

3) If the signals at the two fastener locations are different by more than 20% of FSH, it is possible that the difference is caused by a crack or a small configuration change in the structure. Go to Paragraph 6. for instructions.

(d) Examine all other fastener locations that have the same code and make a mark at the locations where you get signals that are 50% of FSH (or more).

(e) Do Paragraph 5.A.(1)(b) thru Paragraph 5.A.(1)(d) again to examine the upper and lower rear spar chords at the opposite horizontal stabilizer.

(f) During the inspection, frequently do a calibration test of the instrument as follows:

NOTE: Do not adjust the instrument gain.

1) Balance the instrument with the probe at probe position 1 at the applicable calibration location of reference standard NDT3249 as shown in Figure 4.

2) Put the probe at probe position 2 at the applicable calibration location of reference standard NDT3249 to get the maximum signal from the notch (see Figure 4).

BOEING PROPRIETARY - Copyright © Unpublished Work - See title page for details

3) Compare the signal you got from the notch during calibration with the signal you get now.

4) If the signal from the notch in the reference standard has changed 10% (or more) from the signal you got during calibration, do the calibration and inspection again for all the fasteners examined since the last calibration test.

(2) Examine the code “B” number 6 diameter fastener locations as follows:

(a) Calibrate the instrument as specified in Paragraph 4.B.(2).

(b) Do Paragraph 5.A.(1)(b) thru Paragraph 5.A.(1)(f) again.

(3) Examine the code “∗” and “D” number 6 diameter fastener locations as follows:

(a) Calibrate the instrument as specified in Paragraph 4.B.(3) if the inspar skin is graphite composite.

(b) Calibrate the instrument as specified in Paragraph 4.B.(4) if the inspar skin is aluminum.

(c) Do Paragraph 5.A.(1)(b) thru Paragraph 5.A.(1)(f) again.

B. Examine the upper and lower skin flanges of the hinge support ribs for cracks at the fastener locations identified in Paragraph 1.C.(2), Paragraph 1.C.(4) and Paragraph 1.C.(5) as follows:

(1) Examine the code “A” number 8 diameter fastener locations as follows:

(a) Calibrate the instrument as specified in Paragraph 4.C.(1).

(b) Put the probe at one of the fastener locations with the center of the probe above the center of the fastener and balance the instrument.

(c) Put the probe at a different fastener location (that has the same code) and monitor the signal as follows:

1) If the signal is between 0 and 50% of FSH, examine the remaining fastener locations that are the same code.

2) If the signal is above 50% of FSH, put the probe at a different fastener location (that has the same code) at a different ELEV STA location and monitor the screen display for the signal to occur. If the signal at the two fastener locations are almost the same, balance the instrument and examine the remaining fastener locations that are the same code.

NOTE: Small changes in the hole to edge distance (edge margin) can cause the balance point to move.

NOTE: The edge of a shim (if used in the inspection area) can cause the balance point to move up if the edge of the shim is near the probe.

3) If the signals at the two fastener locations are different by more than 20% of FSH, it is possible that the difference is caused by a crack or a small configuration change in the structure. Go to Paragraph 6. for instructions.

(d) Examine all other fastener locations that have the same code and make a mark at the locations where you get signals that are 50% (or more) of FSH.

(e) Do Paragraph 5.A.(1)(b) thru Paragraph 5.A.(1)(d) again to examine the upper and lower skin flanges of the hinge support ribs at the opposite horizontal stabilizer.

(f) During the inspection, frequently do a calibration test of the instrument as follows:

NOTE: Do not adjust the instrument gain.

1) Balance the instrument with the probe at probe position 1 at the applicable calibration location of reference standard NDT3250 as shown in Figure 5.

BOEING PROPRIETARY - Copyright © Unpublished Work - See title page for details

2) Put the probe at probe position 2 at the applicable calibration location of reference standard NDT3250 to get the maximum signal from the notch (see Figure 5).

3) Compare the signal you got from the notch during calibration with the signal you get now.

4) If the signal from the notch in the reference standard has changed 10% or more from the signal you got during calibration, do the calibration and inspection again for all the fasteners examined since the last calibration test.

(2) Examine the code “B” number 6 diameter fastener locations as follows:

(a) Calibrate the instrument as specified in Paragraph 4.C.(2).

(b) Do Paragraph 5.B.(1)(b) thru Paragraph 5.B.(1)(f) again.

(3) Examine the code “∗” and “C” number 6 diameter fastener locations (737-100/200 airplanes only) as follows:

(a) Calibrate the instrument as specified in Paragraph 4.C.(3) if the inspar skin is graphite composite.

(b) Calibrate the instrument as specified in Paragraph 4.C.(4) if the inspar skin is aluminum.

(c) Do Paragraph 5.B.(1)(b) thru Paragraph 5.B.(1)(f) again.

NOTE: The inspection area has an aluminum flame spray coating. This can cause the balance point location to change on the screen display if the thickness of the coating is not the same at the different fastener locations in the inspection area. It can be necessary to remove the coating if the change in the balance point location is more than 50% of FSH.

6. Inspection Results

A. Signals that are 50% (or more) of FSH that look almost the same as the notch signal from the reference standard are signs of possible cracks.

B. If you want to make sure of the results, do the paragraphs that follow:

(1) Make sure that the signal is not caused from a change in structure (fastener edge margin distance). Do a check of the same location on the opposite side of the airplane.

(2) Remove the fastener and do an open hole eddy current inspection as specified in Part 6, 51-00-00, Procedure 16.

BOEING PROPRIETARY - Copyright © Unpublished Work - See title page for details

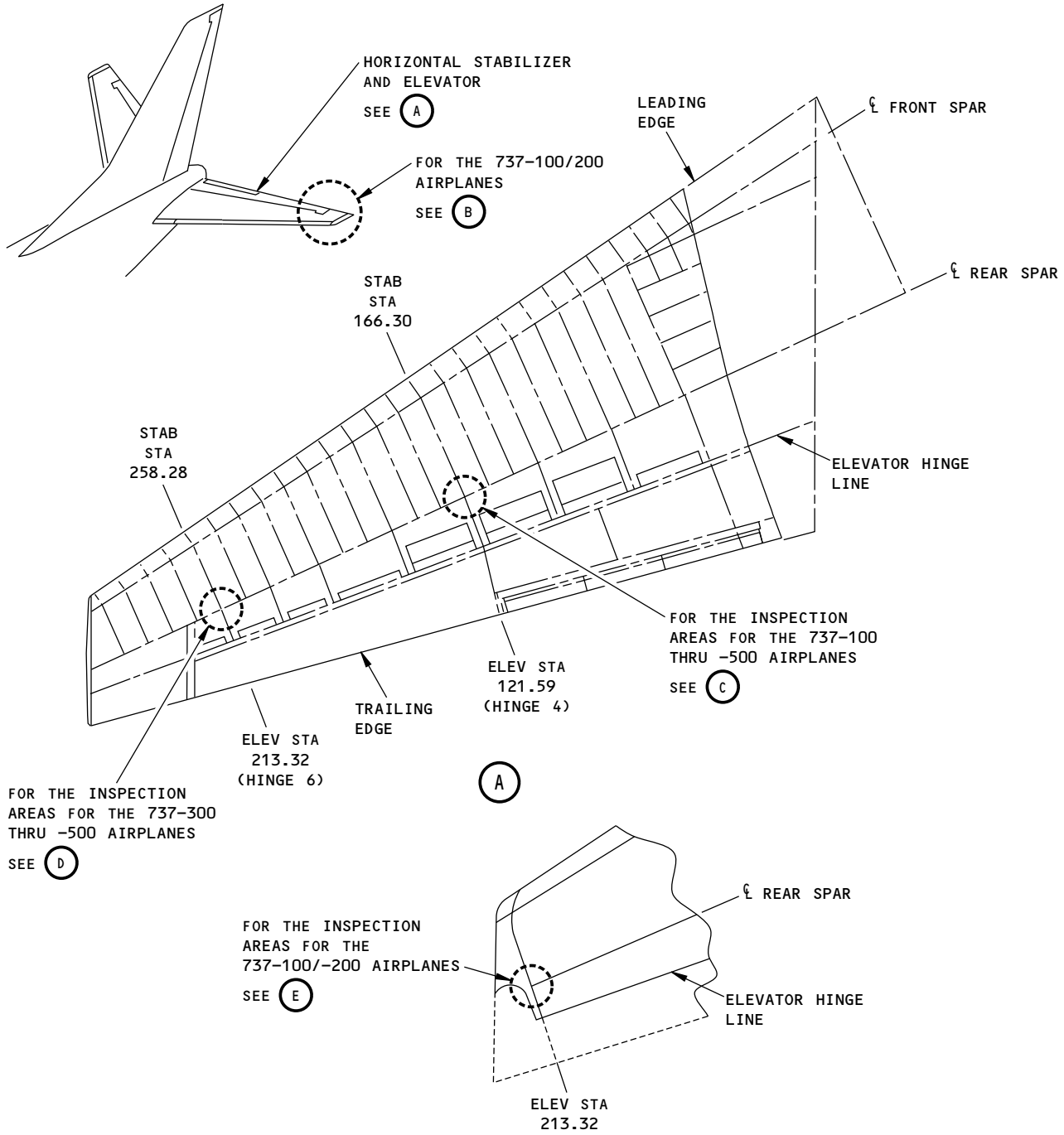

2436480 S0000565583_V1

Inspection Area
Figure 1 (Sheet 1 of 3)

BOEING PROPRIETARY - Copyright © Unpublished Work - See title page for details

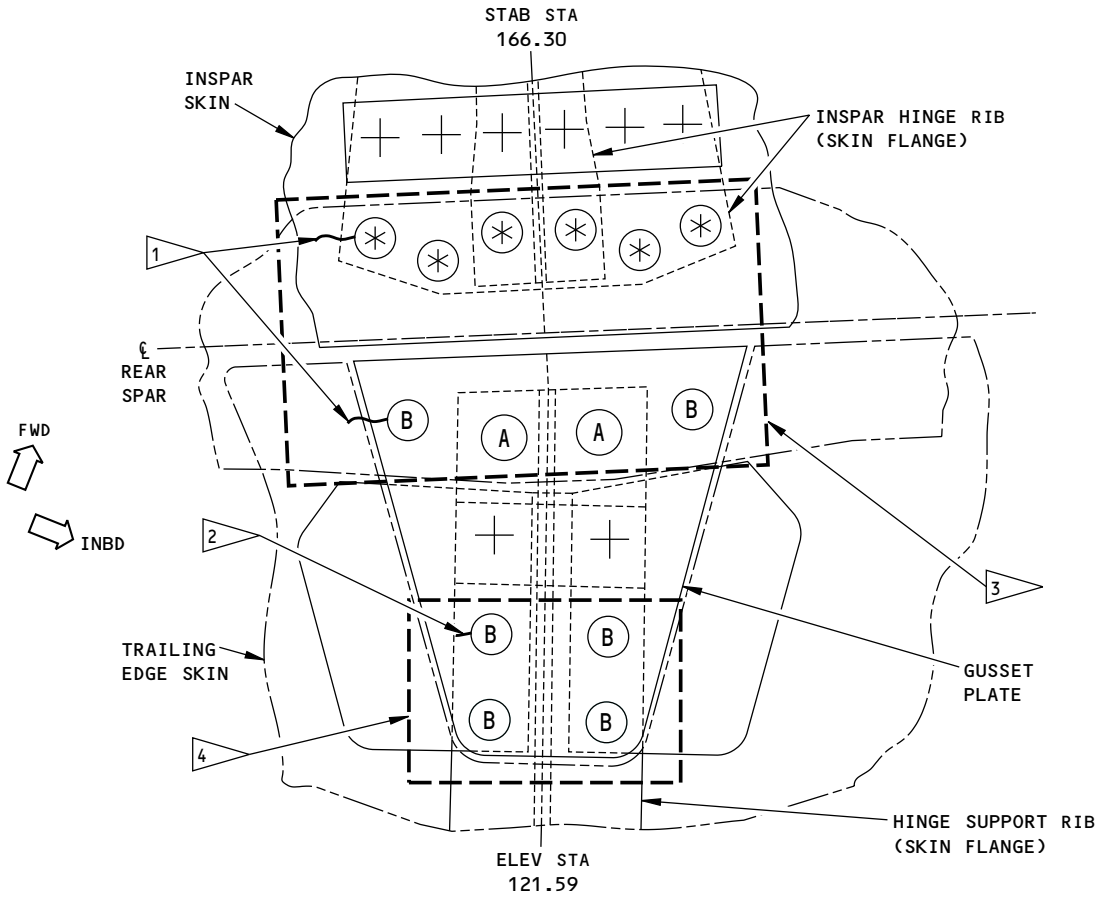

ELEV STA 121.59 - REAR SPAR CHORD AND HINGE SUPPORT RIB OF THE TRAILING EDGE. INSPECTION AREAS FOR 737-100 THRU -500 AIRPLANES. THE UPPER HORIZONTAL STABILIZER IS SHOWN; THE LOWER HORIZONTAL STABILIZER IS OPPOSITE HINGE 4 INSPECTION AREA

C

NOTES

X FASTENER LOCATION TO BE EXAMINED
(WHERE X WILL BE THE FASTENER CODE (A, B, C OR D) USED FOR THE CALIBRATION AND INSPECTION)

* IF THE INSPAR SKIN IS GRAPHITE COMPOSITE, THE FASTENER CODE IS "C".
IF THE INSPAR SKIN IS ALUMINUM, THE FASTENER CODE IS "D".

1 TYPICAL CRACK DIRECTION IN THE SKIN FLANGE OF THE REAR SPAR CHORD.

2 TYPICAL CRACK DIRECTION IN THE SKIN FLANGE OF THE HINGE SUPPORT RIB.

3 REAR SPAR CHORD INSPECTION AREAS. GO TO PARAGRAPH 5.A. FOR THE INSTRUCTIONS TO EXAMINE THE FASTENER LOCATIONS FOR AN ALUMINUM INSPAR SKIN OR A GRAPHITE INSPAR SKIN (737-200 AIRPLANES ONLY).

4 HINGE SUPPORT RIB INSPECTION AREAS OF THE TRAILING EDGE WHERE THE GUSSET PLATE ATTACHES TO THE RIB SKIN FLANGE. GO TO PARAGRAPH 5.B. FOR THE INSPECTION INSTRUCTIONS.

2436486 S0000565584_V1

Inspection Area
Figure 1 (Sheet 2 of 3)

BOEING PROPRIETARY - Copyright © Unpublished Work - See title page for details

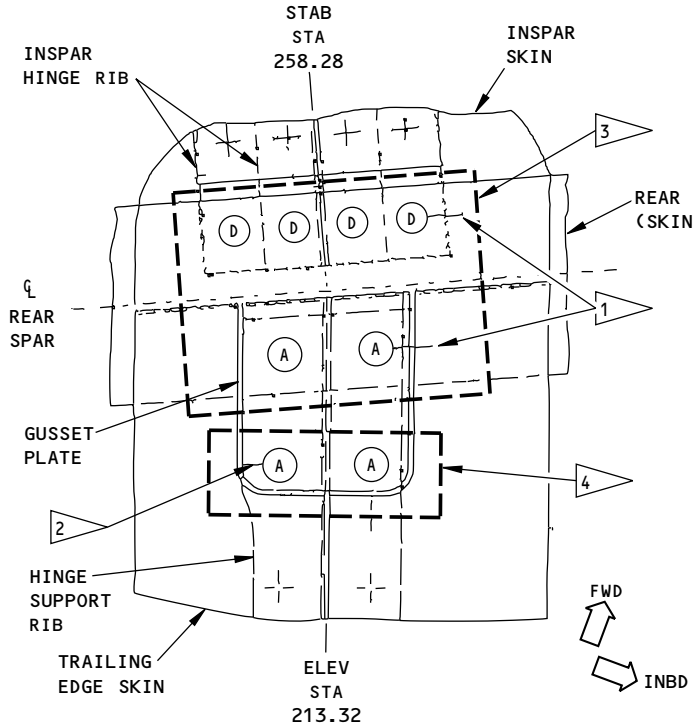

ELEV STA 213.32 - INSPAR HINGE RIB AND HINGE SUPPORT RIB OF THE TRAILING EDGE INSPECTION AREAS FOR 737-300 THRU -500 AIRPLANES. THE UPPER HORIZONTAL STABILIZER IS SHOWN; THE LOWER HORIZONTAL STABILIZER IS OPPOSITE

D

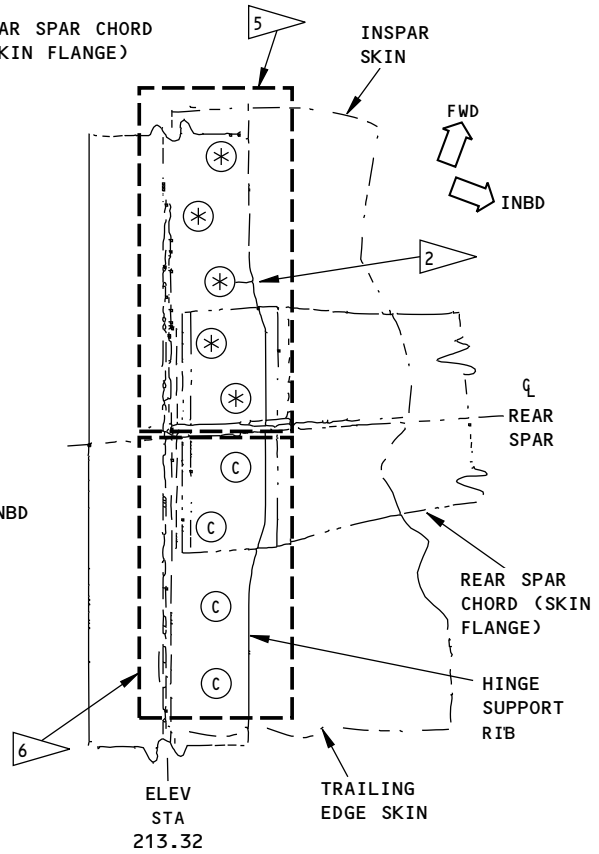

ELEV STA 213.32 - HINGE SUPPORT RIB (INSPAR AND TRAILING EDGE) INSPECTION AREAS FOR 737-100/-200 AIRPLANES. THE UPPER HORIZONTAL STABILIZER IS SHOWN; THE LOWER HORIZONTAL STABILIZER IS OPPOSITE

E

HINGE 6 INSPECTION AREA

NOTES

5 HINGE SUPPORT RIB INSPECTION AREAS OF THE INSPAR SKIN. GO TO PARAGRAPH 5.B FOR THE INSTRUCTIONS TO EXAMINE THE FASTENER LOCATIONS FOR AN ALUMINUM INSPAR SKIN OR A GRAPHITE INSPAR SKIN (737-200 AIRPLANES ONLY).

6 HINGE SUPPORT RIB INSPECTION AREAS OF THE TRAILING EDGE WHERE THE FIBERGLASS SKIN ATTACHES TO THE RIB SKIN FLANGE. GO TO PARAGRAPH 5.B. FOR THE INSPECTION INSTRUCTIONS.

2436664 S0000565585_V1

Inspection Area
Figure 1 (Sheet 3 of 3)

BOEING PROPRIETARY - Copyright © Unpublished Work - See title page for details

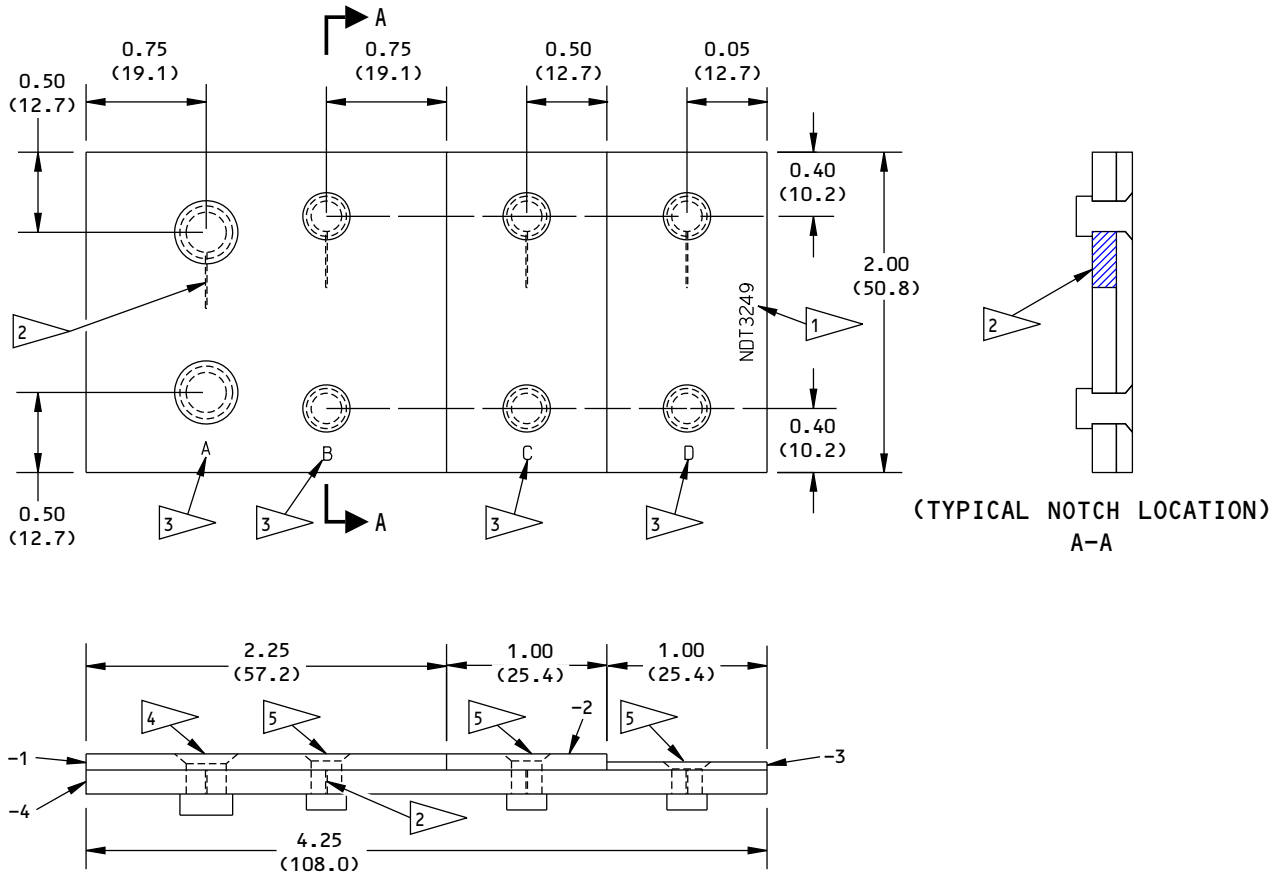

NOTES:

- ALL DIMENSIONS ARE IN INCHES (MILLIMETERS ARE IN PARENTHESES)
- TOLERANCE (UNLESS SPECIFIED DIFFERENTLY):

INCHES	MILLIMETERS
X.XXX = ±0.005	X.XX = ±0.10
X.XX = ±0.025	X.X = ±0.5
X.X = ±0.050	X = ±1

- MATERIAL: -1, -3: 2024-3 OR 7075-T6 (CLAD)
  -2: PLEXIGLASS
  -4: 2024-T3 OR 7075-T6 (CLAD OR BARE)
- PARTS: -1: 0.100 (2.54) X 2.00 (50.1) X 3.00 (76.2)
  -2: 0.090 (2.29) X 2.00 (50.1) X 1.00 (25.4)
  -3: 0.050 (1.27) X 2.00 (50.1) X 1.00 (25.4)
  -4: 0.150 (3.81) X 2.00 (50.1) X 4.25 (108.0)
- SURFACE ROUGHNESS: 63 Ra OR BETTER

1. ETCH OR ENGRAVE THE REFERENCE STANDARD NUMBER, NDT3249, AT APPROXIMATELY THIS LOCATION
2. EDM NOTCH (4 LOCATIONS):
   LENGTH: 0.350 (8.89)
   DEPTH: THROUGH THE THICKNESS
   WIDTH: 0.010 (2.54)
3. ETCH OR ENGRAVE THE LETTER SHOWN AT APPROXIMATELY THIS LOCATION
4. INSTALL BACR15GF8D4 RIVETS AT TWO LOCATIONS.
5. INSTALL BACR15GF6D4 RIVETS AT TWO LOCATIONS.

2436672 S0000565586_V1

Reference Standard NDT3249
Figure 2

BOEING PROPRIETARY - Copyright © Unpublished Work - See title page for details

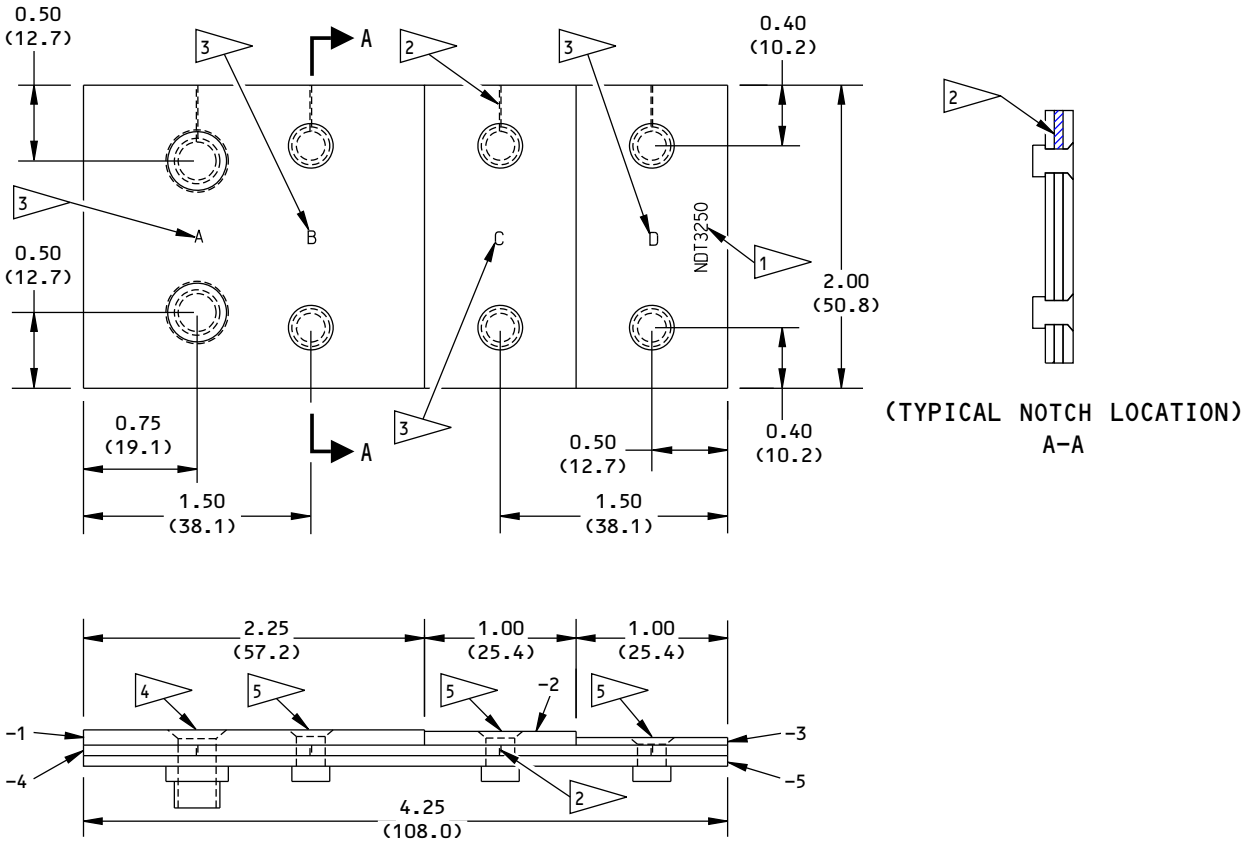

NOTES:

- ALL DIMENSIONS ARE IN INCHES (MILLIMETERS ARE IN PARENTHESES)
- TOLERANCE (UNLESS SPECIFIED DIFFERENTLY):

INCHES	MILLIMETERS
X.XXX = ±0.005	X.XX = ±0.10
X.XX = ±0.025	X.X = ±0.5
X.X = ±0.050	X = ±1

- MATERIAL: -1, -3: 2024-T3 OR 7075-T6 (CLAD)
  -2: PLEXIGLASS
  -4 -5: 2024-T3 OR 7075-T6 (CLAD OR BARE)
- PARTS: -1: 0.100 (2.54) X 2.00 (50.1) X 3.00 (76.2)
  -2: 0.090 (2.29) X 2.00 (50.1) X 1.00 (25.4)
  -3: 0.050 (1.27) X 2.00 (50.1) X 1.50 (38.1)
  -4: 0.070 (1.78) X 2.00 (50.1) X 4.25 (108.0)
  -5: 0.070 (1.78) X 2.00 (50.1) X 4.25 (108.0)
- SURFACE ROUGHNESS: 63 Ra OR BETTER

1. ETCH OR ENGRAVE THE REFERENCE STANDARD NUMBER, NDT3250, AT APPROXIMATELY THIS LOCATION
2. EDM NOTCH (4 LOCATIONS):
   LENGTH: FROM THE EDGE OF THE HOLE TO THE EDGE OF THE PART
   DEPTH: THROUGH THE THICKNESS
   WIDTH: 0.010 (2.54)
3. ETCH OR ENGRAVE THE LETTER SHOWN AT APPROXIMATELY THIS LOCATION
4. INSTALL BACB30YP8K4 TITANIUM BOLTS AND BACC30M8 COLLARS AT TWO LOCATIONS
5. INSTALL BACR15GF6D4 RIVETS AT TWO LOCATIONS

2436698 S0000565587_V2

Reference Standard NDT3250
Figure 3

BOEING PROPRIETARY - Copyright © Unpublished Work - See title page for details

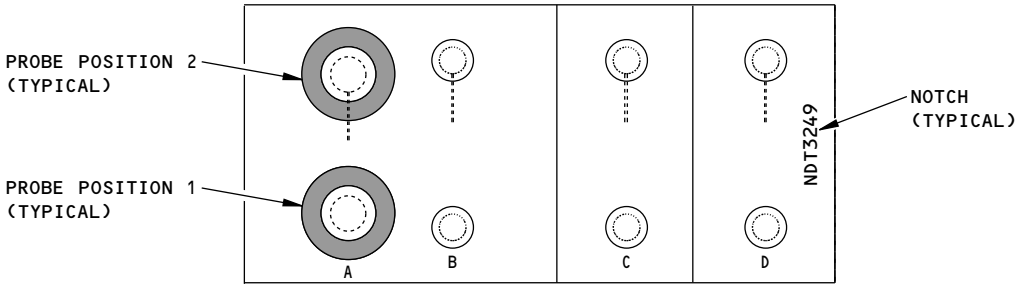

CALIBRATION LOCATION A, B, C AND D ON
REFERENCE STANDARD NDT3249
DETAIL I

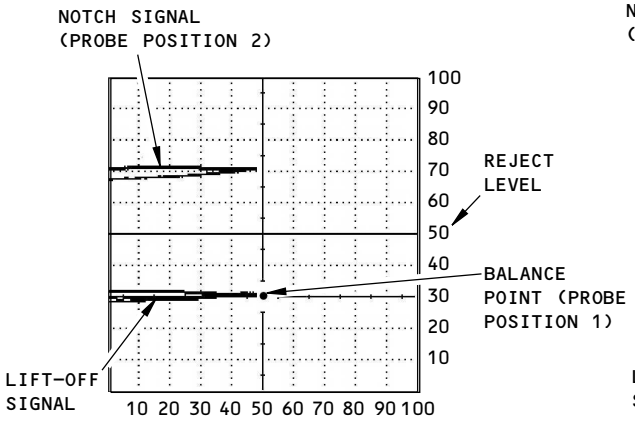

IMPEDANCE PLANE SCREEN DISPLAY FOR
CALIBRATION AT FASTENER "A", "B"
AND "D" LOCATIONS
DETAIL II

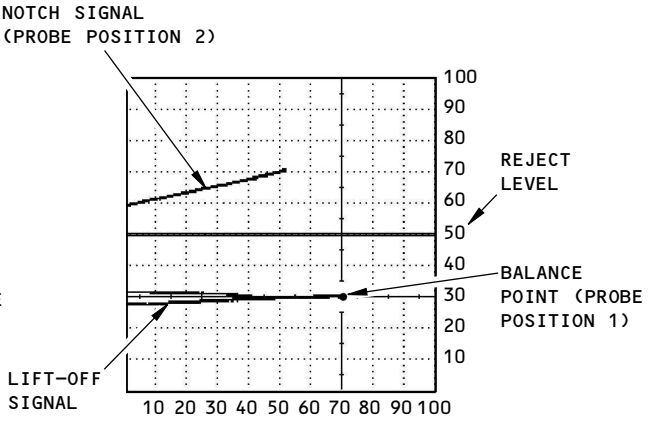

IMPEDANCE PLANE SCREEN DISPLAY FOR
CALIBRATION AT FASTENER "C"
LOCATIONS (GRAPHITE INSPAR SKIN
(737-100/200 AIRPLANES))
DETAIL III

FASTENER LOCATION TO BE EXAMINED (FASTENER CODE)	REFERENCE STANDARD CALIBRATION POSITION	INSTRUMENT FREQUENCY
A, B	A, B	1.0 TO 1.5 kHz
C	C	8.0 TO 10.0 kHz
D	D	2.0 TO 3.0 kHz

CALIBRATION DATA

2436711 S0000565589_V1

Instrument Calibration on Reference Standard NDT3249
Figure 4

BOEING PROPRIETARY - Copyright © Unpublished Work - See title page for details

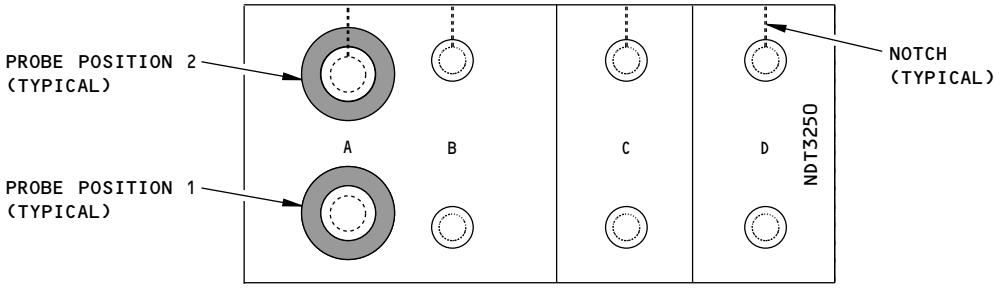

CALIBRATION LOCATIONS A, B, C AND D ON
REFERENCE STANDARD NDT3250
DETAIL I

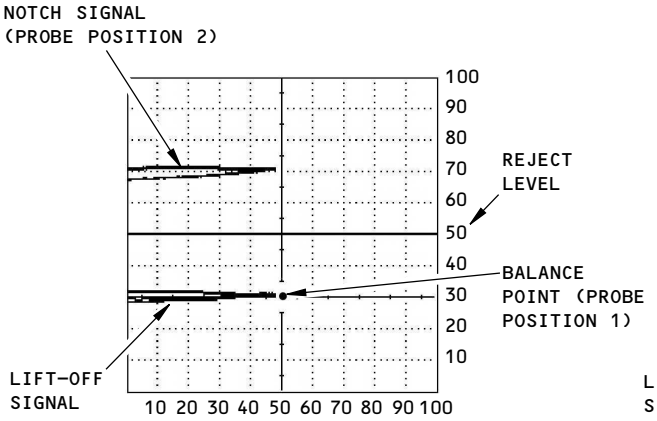

IMPEDANCE PLANE SCREEN DISPLAY FOR
CALIBRATION AT FASTENER "A", "B"
AND "D" LOCATIONS
DETAIL II

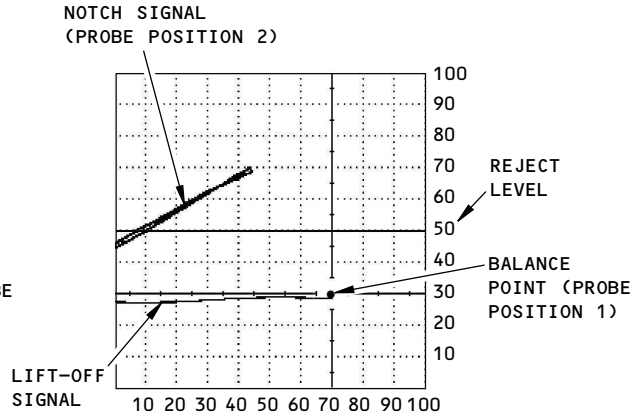

IMPEDANCE PLANE SCREEN DISPLAY FOR
CALIBRATION AT FASTENER "C" LOCATIONS
DETAIL III

FASTENER LOCATION TO BE EXAMINED (FASTENER CODE)	REFERENCE STANDARD CALIBRATION POSITION	INSTRUMENT FREQUENCY
A, B	A, B	1.0 TO 1.5 kHz
C	C	8.0 TO 10.0 kHz
D	D	2.0 TO 3.0 kHz

CALIBRATION DATA

2436717 S0000565590_V1

Instrument Calibration on Reference Standard NDT3250
Figure 5

BOEING PROPRIETARY - Copyright © Unpublished Work - See title page for details

PART 6 - EDDY CURRENT

HORIZONTAL STABILIZER - INSPAR SKINS AND GUSSET PLATES AT THE REAR SPAR CHORDS AND HINGE SUPPORT RIB CHORDS, HINGE ATTACH PLATES AND ELEVATOR FITTINGS AT ELEV STA 121.59 AND 213.32 (HFEC)

1. Purpose

A. Use this high frequency eddy current (HFEC) procedure to find cracks in the horizontal stabilizer and elevator at the inspections areas as follows:

(1) Upper and lower inspar skins and gusset plates at the rear spar chords and the hinge support ribs of the horizontal stabilizer at ELEV STA 121.59 (Hinge 4) and 213.32 (Hinge 6). See Figure 1 for the inspection areas.

NOTE: Some 737-200 airplanes have graphite composite inspar skins. All the fasteners that go through the inspar skin for these airplanes are not examined with this procedure.

(2) Hinge attach plates at the stabilizer hinge support ribs of the horizontal stabilizer and the elevator hinge fittings of the elevator at ELEV STA 121.59 (Hinge 4) and 213.32 (Hinge 6). See Figure 2 and Figure 3 for the inspection areas.

B. This procedure examines all 737-100 thru -500 airplanes. The configuration of the horizontal stabilizer is different between the 737-100/200 and the 737-300 thru -500 airplanes. The inspection areas at ELEV STA 121.59 (Hinge 4) are the same for the 737-100 thru -500 airplanes. The inspection areas at ELEV STA 213.32 (Hinge 6) are different between the 737-100/-200 and the 737-300 thru -500 airplanes. See Figure 1 thru Figure 3 for the Hinge 4 and 6 configurations and inspection areas.

C. Use this procedure to examine the upper and lower aluminum inspar skins and gusset plates of the horizontal stabilizer for cracks that can occur at the fastener locations. The areas to be examined are as follows:

(1) Six fastener locations where the inspar skin attaches to the forward flange of the rear spar chord at ELEV STA 121.59 (Hinge 4) for the 737-100 thru -500 airplanes. See Figure 1, View C.

(2) Eight fastener locations where the gusset plate attaches to the aft flange of the rear spar chord and the skin flange of the hinge support rib at ELEV STA 121.59 (Hinge 4) for the 737-100 thru -500 airplanes. See Figure 1, View C.

(3) Four fastener locations where the inspar skin attaches to the forward flange of the rear spar chord at ELEV STA 213.32 (Hinge 6) for the 737-300 thru -500 airplanes. See Figure 1, View D.

(4) Four fastener locations where the gusset plate attaches to the aft flange of the rear spar chord and the skin flange of the hinge support rib at ELEV STA 213.32 (Hinge 6) for the 737-300 thru -500 airplanes. See Figure 1, View D.

(5) Five fastener locations where the inspar skin attaches to the skin flange of the hinge support rib at ELEV STA 213.32 (Hinge 6) for the 737-100/200 airplanes. See Figure 1, View E.

D. Use this procedure to examine the hinge attach plates and elevator hinge fittings for cracks. The areas to be examined are as follows:

(1) Four fastener locations where the hinge attach plates attach to the stabilizer hinge support rib and the elevator hinge fitting at ELEV STA 121.59 (Hinge 4) and three fastener locations where the hinge attach plates attach to the stabilizer hinge support rib and the elevator hinge fitting at ELEV STA 213.32 (Hinge 6) for the 737-100 thru -500 airplanes. See Figure 2 and Figure 3, flagnote 2.

(2) The inboard and outboard fillet of the elevator hinge fitting lug at ELEV STA 121.59 (Hinge 4) and ELEV STA 213.32 (Hinge 6) for the 737-100/200 airplanes. See Figure 2, flagnote 1.

BOEING PROPRIETARY - Copyright © Unpublished Work - See title page for details

(3) Four fastener locations where the elevator hinge fitting attaches to the elevator front spar at ELEV STA 121.59 (Hinge 4) and ELEV STA 213.32 (Hinge 6) for the 737-100/200 airplanes. See Figure 2, flagnote 2.

(4) Four fillet locations at the upper and lower flanges and clevis lugs of the elevator hinge fitting at ELEV STA 121.59 (Hinge 4) and ELEV STA 213.32 (Hinge 6) for the 737-300 thru -500 airplanes. See Figure 3, flagnote 1.

(5) Four fastener locations in the upper and lower flanges of the elevator hinge fitting where it attaches to the elevator front spar at ELEV STA 121.59 (Hinge 4) and six fastener locations at ELEV STA 213.32 (Hinge 6) for the 737-300 thru -500 airplanes. See Figure 3, flagnote 2.

(6) Four clevis lug locations of the elevator hinge fitting at ELEV STA 121.59 (Hinge 4) and ELEV STA 213.32 (Hinge 6) for the 737-300 thru -500 airplanes. See Figure 3, flagnote 4.

(7) Outer edge of the upper and lower flanges of the elevator hinge fitting at ELEV STA 213.32 (Hinge 6) and the outboard side of the stabilizer hinge support rib for the 737-300 thru -500 airplanes. See Figure 3, flagnote 6. Approximately 0.50 inch (13 mm) of the inspection area is hidden inside the inboard tip fairing.

E. This procedure uses shielded, right-angle, 45 degree angle and straight pencil probes to examine all of the inspection areas shown in Figure 1 thru Figure 3 as follows:

(1) Use a right-angle or a straight probe of no specified drop or length to examine the inspection areas in Paragraph 1.C.(1) thru Paragraph 1.C.(5).

(2) Use a small diameter (0.060 to 0.090 inch (1.52 to 2.29 mm), 45 degree angle probe to examine the inspection areas in Paragraph 1.D.(1) thru Paragraph 1.D.(3).

(3) Use a right-angle probe with a 0.030 inch (0.76 mm) drop to examine the inspection area in Paragraph 1.D.(7).

(4) Use a small diameter (0.060 to 0.090 inch (1.52 to 2.29 mm), right-angle probe with a 0.10 inch (0.76 mm) drop to examine the inspection area in Paragraph 1.D.(6).

(5) Use a small diameter (0.060 to 0.090 inch (1.52 to 2.29 mm), straight probe to examine the inspection area in paragraph Paragraph 1.D.(4) and Paragraph 1.D.(5).

(6) Use probes specified in Paragraph 1.E.(2) thru Paragraph 1.E.(6) that have a flexible shaft and a work length of 5 to 7 inches (127 to 178 mm).

F. Service Bulletin Reference: 737-55A1099

2. Equipment

A. General

(1) Use inspection equipment that can be calibrated on the reference standard as specified in Paragraph 4.

(2) Refer to Part 1, 51-01-00, for data about the equipment manufacturers.

B. Instrument

(1) Use an eddy current instrument that:

(a) Has an impedance plane display.

(b) Operates at a frequency range between 50 and 500 kHz.

(2) The instruments that follow were used to help prepare this procedure.

(a) Phasec 2d; GE Inspection Technologies

BOEING PROPRIETARY - Copyright © Unpublished Work - See title page for details

(b) Nortec 2000D; Olympus NDT

C. Probes

(1) Use shielded, right-angle, 45 degree angle, and straight pencil probes as specified in Paragraph 1.E. for the correct probe to use for the inspection area to be examined. Refer to Part 6, 51-00-00, Procedure 23, paragraph 3.C., for data about probe selection.

(a) The right-angle or straight probes of no specific drop or length that follow were used to help prepare this procedure.

1) ATPN-3; AeroFab NDT (straight)

2) TPEN925-4; Techna NDT (right-angle)

(b) The 45 degree angle probes that follow were used to help prepare this procedure.

1) AXTPN45-6; AeroFab NDT

2) TSPENFLX45-6; Techna NDT

(c) The 0.030 inch (0.76 mm) drop, right-angle probes that follow were used to help prepare this procedure.

1) AXTPN902-7FX; AeroFab NDT

2) TPENFLX903-7; Techna NDT

(d) The small diameter, 0.10 inch (2.54 mm) drop, right-angle probes that follow were used to help prepare this procedure.

1) AXTPN91-6FX; AeroFab NDT

2) TSPENFLX91-6; Techna NDT

(e) The small diameter, straight probes that follow were used to help prepare this procedure.

1) AXTPN-7FX; AeroFab NDT

2) TSPENFLX-7; Techna NDT

D. Reference Standards

(1) Use reference standards 126, 188A, 189 and NDT1048 (or an equivalent) as given in Part 6, 51-00-00, Procedure 23, paragraph 3.D.

E. Probe Guides

(1) Use a nonconductive circle template to help make a scan around the inspar skin and gusset plate fasteners.

(2) Use a nonconductive, flexible material as a probe guide to help move the probe around the slider bolts, to make a scan around the outer edge of the bushing in the clevis lugs of the elevator hinge fitting. See Figure 3.

3. Prepare for the Inspection

A. Identify the inspection areas shown in Figure 1 thru Figure 3.

B. Get access to the inspection areas.

(1) Remove the upper and lower elevator nose hinge covers 9128L, 9129L, 9136L, 9137L, 9228R, 9229R, 9236R, and 9237R to get access to the elevator hinge fittings at hinges 4 and 6.

(2) Remove the flat seals at hinge 4.

C. Clean the inspection areas. Remove all sealant and corrosion preventive coating from the inspection areas.

BOEING PROPRIETARY - Copyright © Unpublished Work - See title page for details

D. If the surface is rough, make it smooth by approved procedures. It is not necessary to remove paint unless it is loose.

4. Instrument Calibration

A. Calibrate the equipment as follows:

(1) Refer to Part 6, 51-00-00, Procedure 23, paragraph 5, for the calibration instructions.

(2) Use the rivet location of reference standard NDT1048, or an equivalent, and a probe identified in Paragraph 1.E.(1) to examine the inspection areas identified in Paragraph 1.C.(1) thru Paragraph 1.C.(5). Use a nonconductive circle template as a probe guide.

(3) Use the bolt location of reference standard 188A, or an equivalent, with the probes that follow to examine the inspection areas that follow:

(a) Use a probe identified in Paragraph 1.E.(2) to examine the inspection areas identified in Paragraph 1.D.(1) and Paragraph 1.D.(3).

(b) Use a probe identified in Paragraph 1.E.(3) to examine the inspection areas identified in Paragraph 1.D.(7).

(c) Use a probe identified in Paragraph 1.E.(4) to examine the inspection areas identified in Paragraph 1.D.(6).

(4) Use reference standard 126, or an equivalent, with the probes that follow to examine the inspection areas that follow:

(a) Use a probe identified in Paragraph 1.E.(2) to examine the inspection areas identified in Paragraph 1.D.(1) thru Paragraph 1.D.(3).

(b) Use a probe identified in Paragraph 1.E.(3) to examine the inspection areas identified in Paragraph 1.D.(7).

(c) Use a probe identified in Paragraph 1.E.(5) to examine the inspection areas identified in Paragraph 1.D.(4) and Paragraph 1.D.(5).

(5) Use reference standard 189, or an equivalent and the 0.125 inch (3.18 mm) thick piece with the a probe identified in Paragraph 1.E.(3) to examine the inspection areas identified in Paragraph 1.D.(7).

5. Inspection Procedure

A. Examine the inspection areas identified in Paragraph 1.C.(1) thru Paragraph 1.C.(5) for cracks that can occur at the fastener locations in the upper and lower aluminum inspar skins and gusset plates as follows:

(1) Calibrate the instrument as specified in Paragraph 4.A.(1) and Paragraph 4.A.(2).

(2) Make a complete scan of the inspection areas around the head of the fastener with the help of a nonconductive circle template.

(3) Refer to Part 6, 51-00-00, Procedure 23, paragraph 6, for the inspection procedure. Refer to paragraph 6.E.(3)(b) for instructions to examine areas for cracks around flush head fasteners.

B. Examine the inspection areas identified in Paragraph 1.D.(1), Paragraph 1.D.(3), Paragraph 1.D.(5) and Paragraph 1.D.(6) for cracks that can occur in the hinge attach plates and the elevator hinge fittings as follows:

(1) Calibrate the instrument as specified in Paragraph 4.A.(1) and Paragraph 4.A.(3).

(2) Make a complete scan of the inspection areas around the fasteners.

BOEING PROPRIETARY - Copyright © Unpublished Work - See title page for details

(3) Refer to Part 6, 51-00-00, Procedure 23, paragraph 6, for the inspection procedure. Refer to paragraph 6.E.(3)(c) for instructions to examine areas for cracks around protruding head fasteners.

C. Examine the inspection areas identified in Paragraph 1.D.(2), Paragraph 1.D.(4) and Paragraph 1.D.(7) for cracks that can occur in the elevator hinge fittings as follows:

(1) Calibrate the instrument as specified in Paragraph 4.A.(1) and Paragraph 4.A.(4).

(2) Make a complete scan of the fillet locations and the outer edge of the upper and lower flanges of the elevator hinge fittings.

(3) Refer to Part 6, 51-00-00, Procedure 23, paragraph 6, for the inspection procedure. Refer to paragraph 6.E.(3)(d) for instructions to examine the fillet areas for cracks. Refer to paragraph 6.E.(3)(e) to examine the outer edge of the upper and lower flanges of the elevator hinge fittings.

6. Inspection Results

A. Refer to Part 6, 51-00-00, Procedure 23, paragraph 7, for instructions to help make an analysis of indications that occur during the inspections.

BOEING PROPRIETARY - Copyright © Unpublished Work - See title page for details

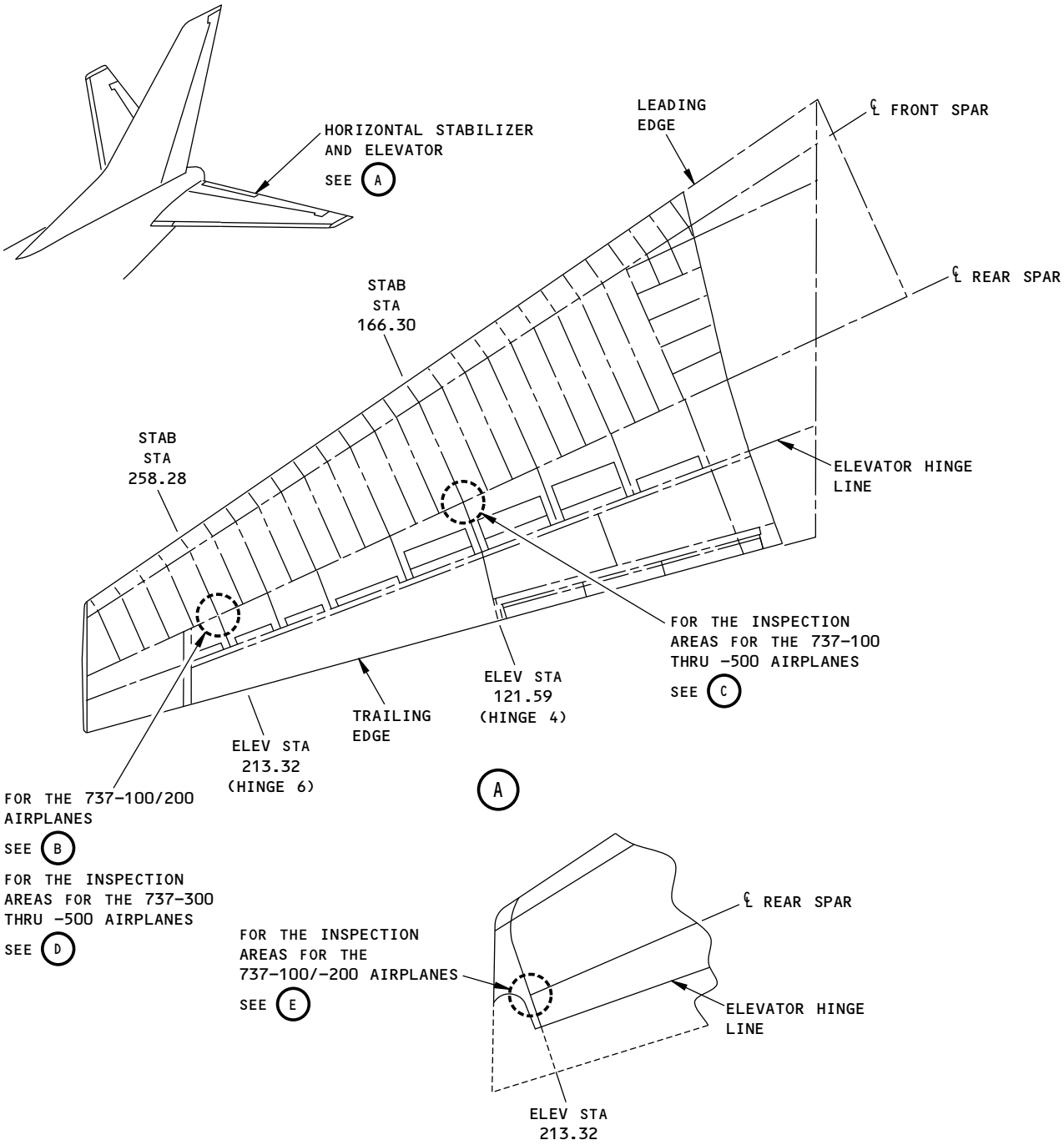

2434930 S0000564001_V1

Horizontal Stabilizer Inspection Areas
Figure 1 (Sheet 1 of 4)

BOEING PROPRIETARY - Copyright © Unpublished Work - See title page for details

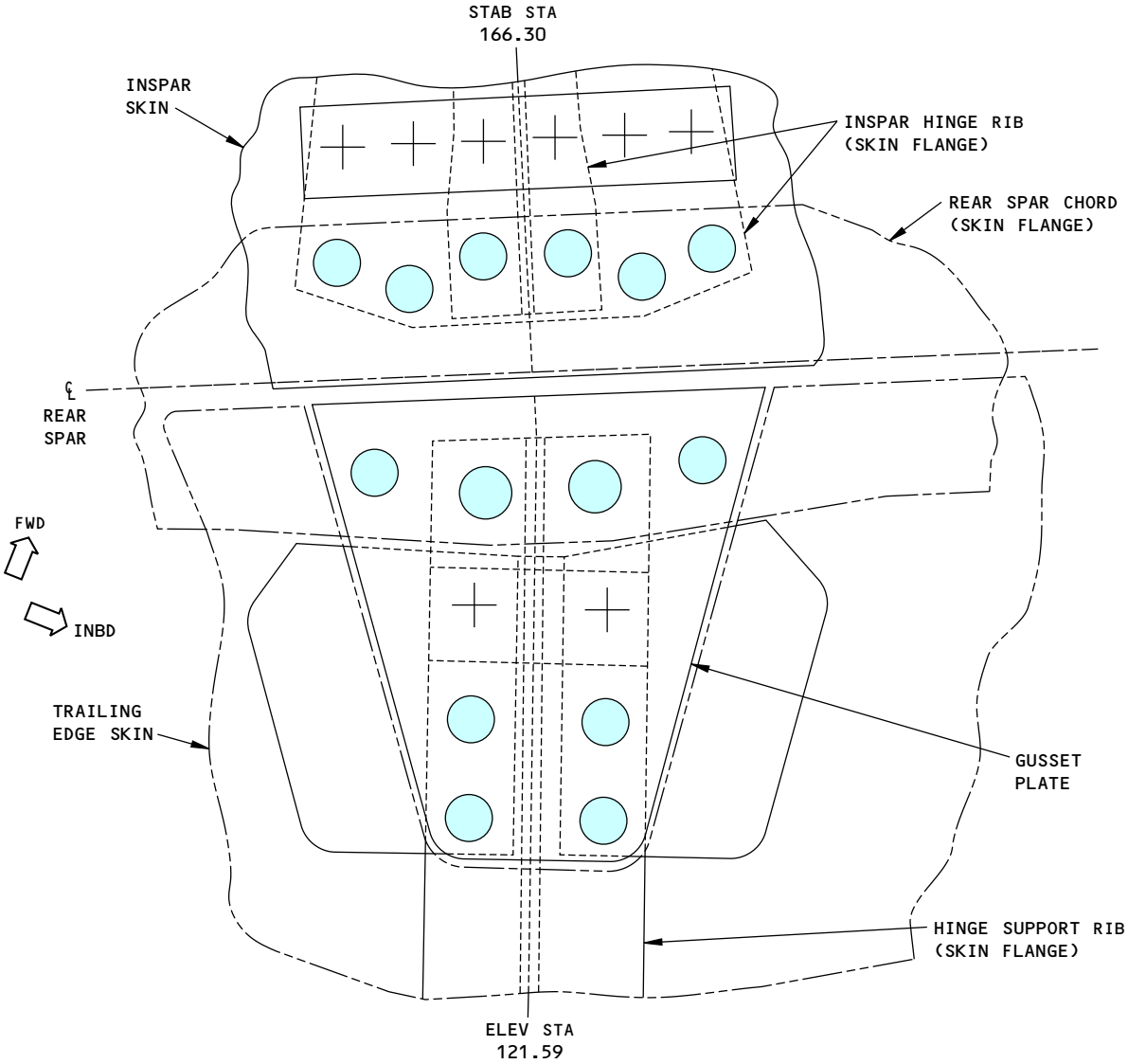

ELEV STA 121.59 - REAR SPAR CHORD AND
HINGE SUPPORT RIB OF THE TRAILING EDGE.
INSPECTION AREAS FOR 737-100 THRU -500 AIRPLANES.
THE UPPER HORIZONTAL STABILIZER IS SHOWN;
THE LOWER HORIZONTAL STABILIZER IS OPPOSITE

C

NOTES

FASTENER LOCATION TO BE EXAMINED.

HINGE 4 INSPECTION AREA

2434991 S0000564002_V2

Horizontal Stabilizer Inspection Areas
Figure 1 (Sheet 2 of 4)

BOEING PROPRIETARY - Copyright © Unpublished Work - See title page for details

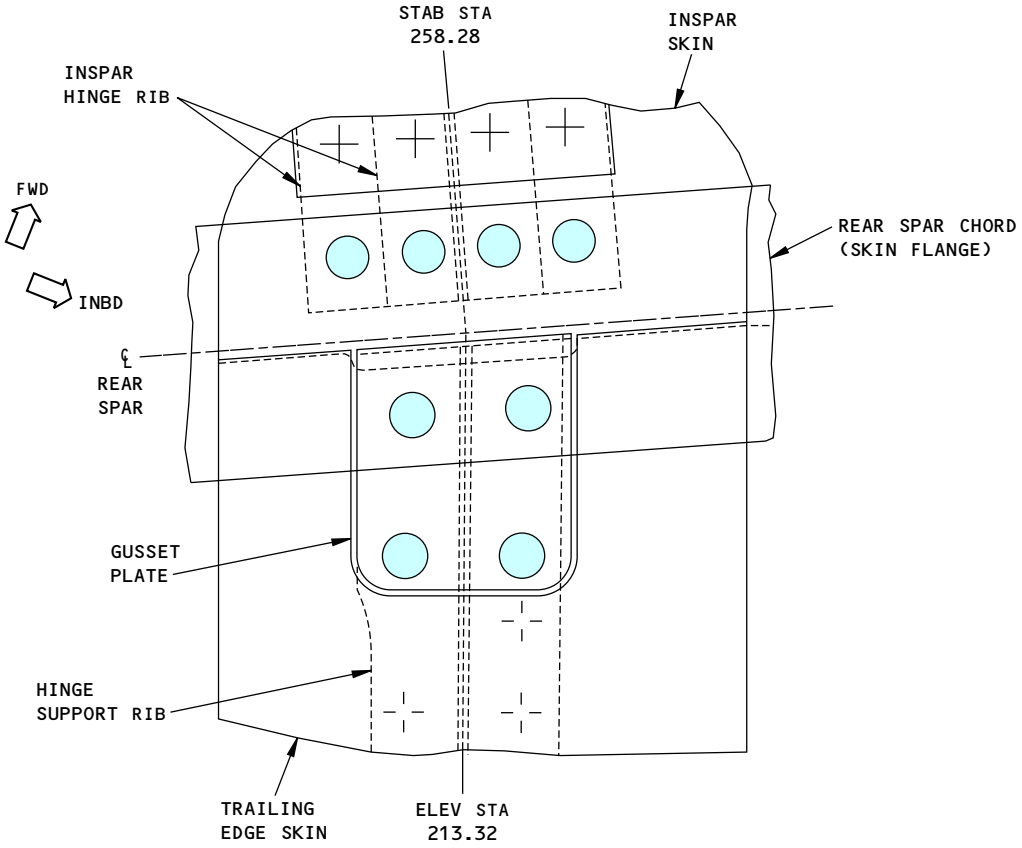

ELEV STA 213.32 - INSPAR HINGE RIB AND HINGE
SUPPORT RIB OF THE TRAILING EDGE
INSPECTION AREAS FOR 737-300 THRU -500 AIRPLANES.
THE UPPER HORIZONTAL STABILIZER IS SHOWN;
THE LOWER HORIZONTAL STABILIZER IS OPPOSITE

D

HINGE 6 INSPECTION AREA

2435006 S0000564003_V1

Horizontal Stabilizer Inspection Areas
Figure 1 (Sheet 3 of 4)

BOEING PROPRIETARY - Copyright © Unpublished Work - See title page for details

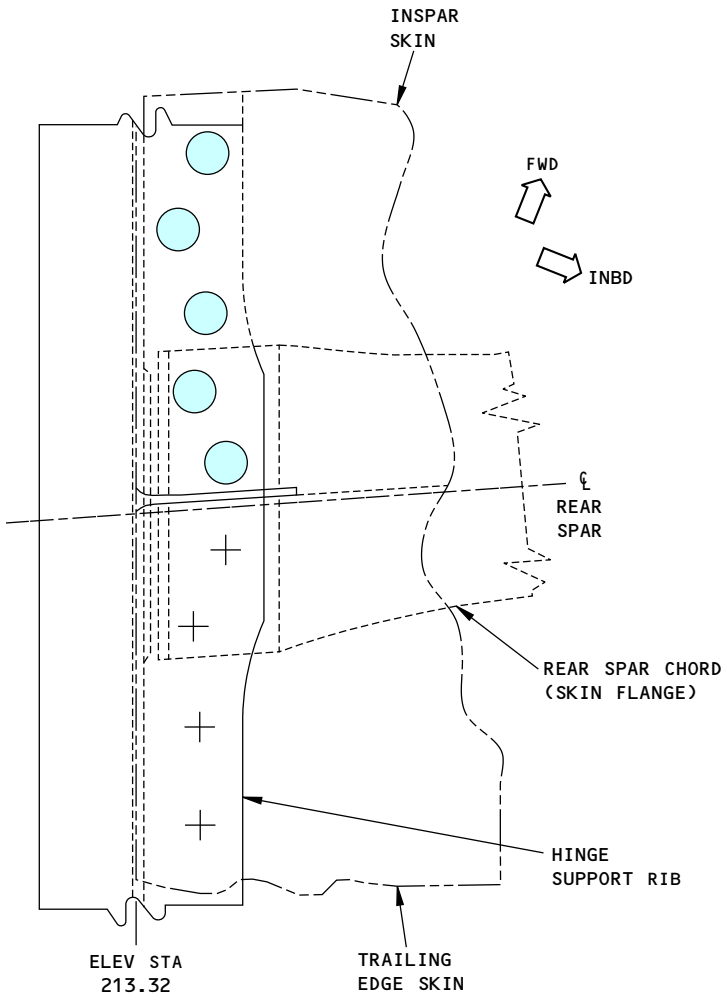

ELEV STA 213.32 - HINGE SUPPORT RIB
INSPAR INSPECTION AREAS FOR 737-100/200 AIRPLANES.
THE UPPER HORIZONTAL STABILIZER IS SHOWN;
THE LOWER HORIZONTAL STABILIZER IS OPPOSITE

E

HINGE 6 INSPECTION AREA

2435007 S0000564844_V1

Horizontal Stabilizer Inspection Areas
Figure 1 (Sheet 4 of 4)

BOEING PROPRIETARY - Copyright © Unpublished Work - See title page for details

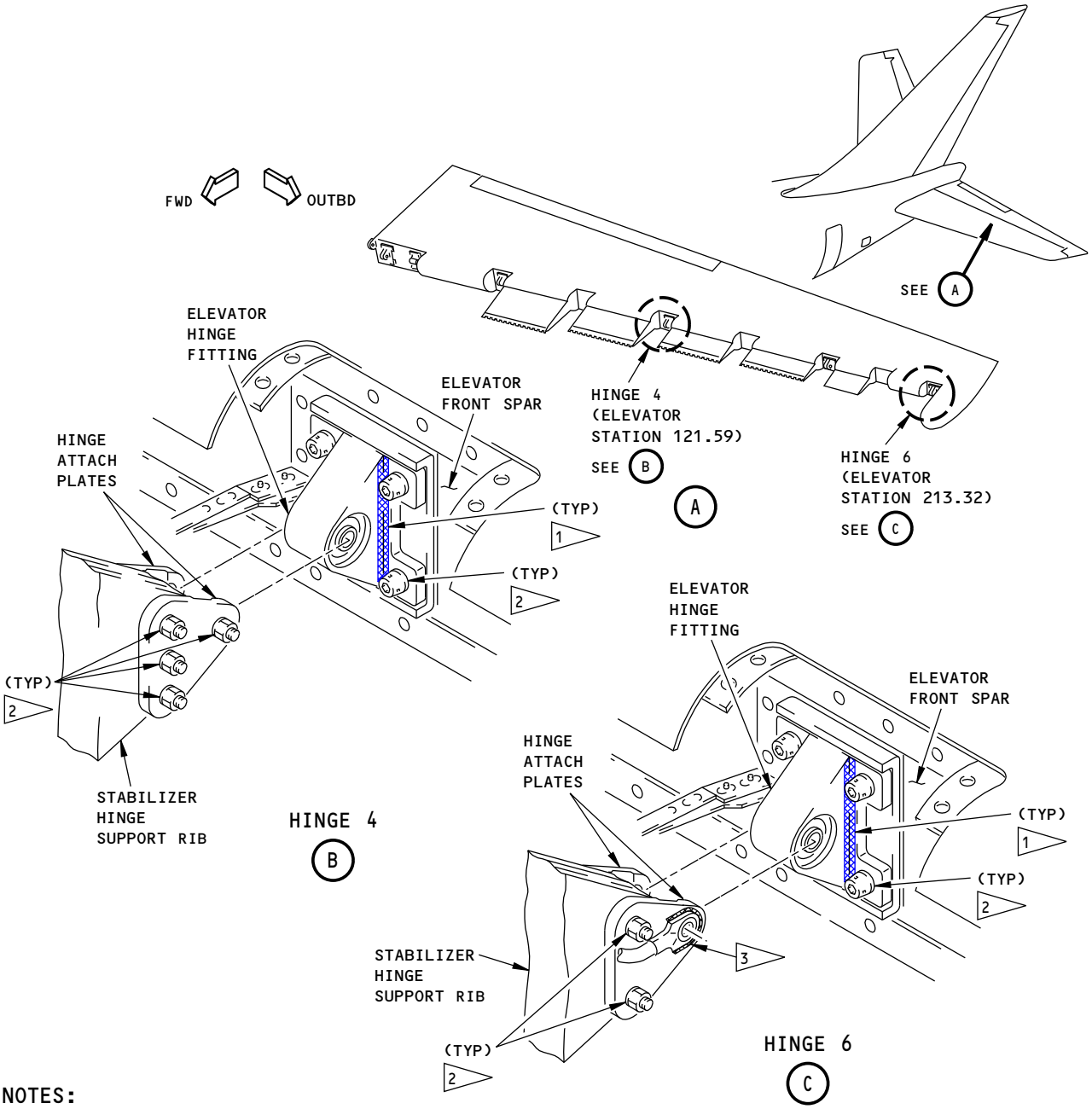

NOTES:

1. TYPICAL FILLET INSPECTION AREA ON THE INBOARD AND OUTBOARD SIDES OF THE HINGE FITTING LUG
2. MAKE A COMPLETE SCAN AROUND THE WASHER/COLLAR OF THE TWO HINGE ATTACH PLATES AND THE FOUR FASTENER LOCATIONS THAT ATTACH THE HINGE FITTING TO THE ELEVATOR FRONT SPAR
3. MAKE SURE THE POSITION OF THE BONDING JUMPER CONNECTOR CABLE POINTS IN THE FORWARD DIRECTION, AS SHOWN. MAKE A SCAN AROUND THE OUTER EDGE OF THE CONNECTOR AS IS PERMITTED

2435080 S0000564004_V1

Elevator Inspection Areas - Hinge Fittings and Attach Plates for 737-100/200 Airplanes
Figure 2

BOEING PROPRIETARY - Copyright © Unpublished Work - See title page for details

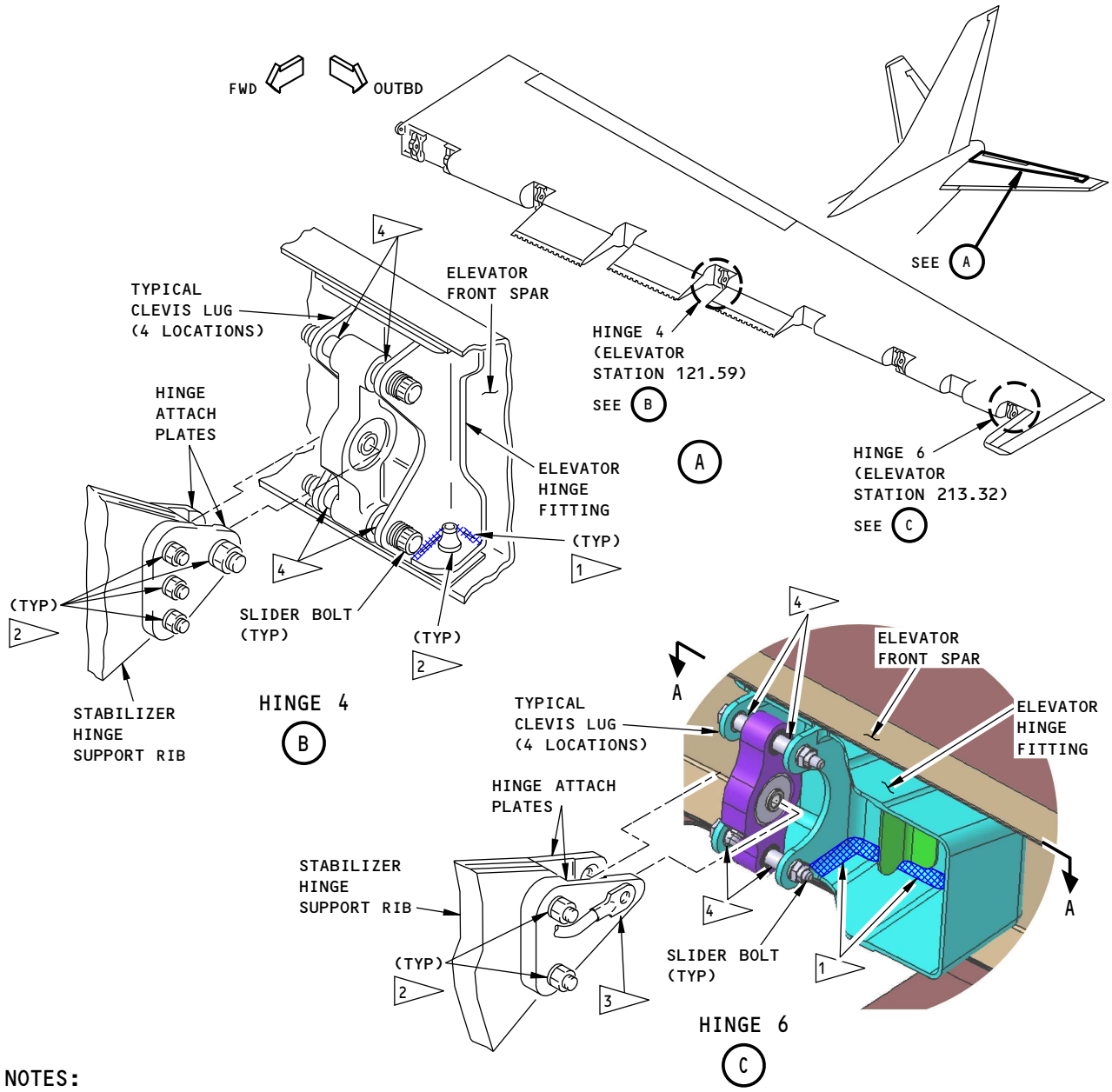

NOTES:

1. TYPICAL FILLET INSPECTION AREA AT THE UPPER AND LOWER FLANGES.
2. MAKE A COMPLETE SCAN AROUND THE WASHER/COLLAR OF THE TWO HINGE ATTACH PLATES AND ALL FASTENER LOCATIONS THAT ATTACH THE HINGE FITTING TO THE ELEVATOR FRONT SPAR
3. THERE CAN BE A BONDING JUMPER CONNECTOR AT THIS LOCATION. IF THERE IS, MAKE SURE THE POSITION OF THE BONDING JUMPER CONNECTOR CABLE POINTS IN THE FORWARD DIRECTION, AS SHOWN. MAKE A SCAN AROUND THE OUTER EDGE OF THE CONNECTOR AS IS PERMITTED
4. MAKE A COMPLETE SCAN AROUND THE OUTER EDGE/FLANGE OF THE BUSHING ON THE INNER SURFACE OF THE FOUR CLEVIS LUGS

2435220 S0000564005_V1

Elevator Inspection Areas - Hinge Fittings and Attach Plates for 737-300 thru -500 Airplanes
Figure 3 (Sheet 1 of 2)

BOEING PROPRIETARY - Copyright © Unpublished Work - See title page for details

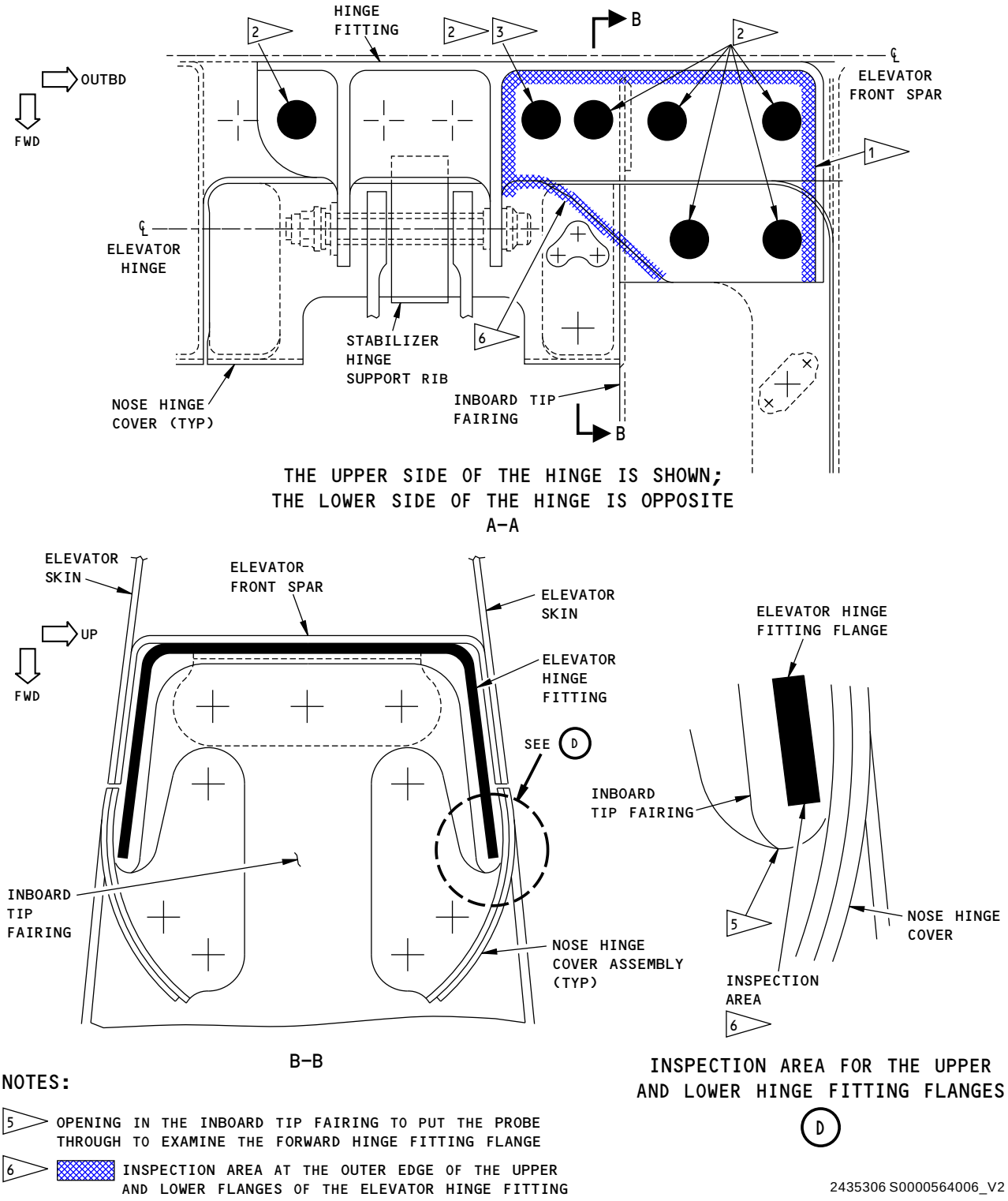

NOTES:

5 OPENING IN THE INBOARD TIP FAIRING TO PUT THE PROBE THROUGH TO EXAMINE THE FORWARD HINGE FITTING FLANGE

6 INSPECTION AREA AT THE OUTER EDGE OF THE UPPER AND LOWER FLANGES OF THE ELEVATOR HINGE FITTING

2435306 S0000564006_V2

Elevator Inspection Areas - Hinge Fittings and Attach Plates for 737-300 thru -500 Airplanes
Figure 3 (Sheet 2 of 2)

BOEING PROPRIETARY - Copyright © Unpublished Work - See title page for details

WEB FLANGE OF THE UPPER CHORD AND WEB AT THE FRONT SPAR OF THE HORIZONTAL STABILIZER

1. Purpose

A. Use this procedure to examine the web flange of the upper chord and the web at the upper chord of the front spar of the horizontal stabilizer for cracks from STAB STA 75.0 to 175.5. Two inspections that use different frequencies are necessary to examine these parts for cracks:

(1) Low frequency eddy current (LFEC) is used to examine the web flange of the upper chord for subsurface cracks that can start at the fastener holes.

(2) High frequency eddy current (HFEC) is used to examine the web at the upper chord for cracks that can start at the fastener locations.

B. This procedure uses an impedance plane display instrument.

C. The upper chord and web are aluminum.

D. 737 Maintenance Planning Data (MPD) Damage Tolerance Rating (DTR) Check Form Reference:

(1) Item: 55-10-06-4C

2. Equipment

A. General

(1) Use inspection equipment that can be calibrated as specified in Part 6, 51-00-00, Procedure 9, Paragraph 5, to examine the web flange of the upper chord for subsurface cracks.

(2) Use inspection equipment that can be calibrated as specified in Part 6, 51-00-00, Procedure 23, Paragraph 5, to examine the web at the upper chord of the front spar for surface cracks

(3) Refer to Part 1, 51-01-00, for data about the equipment manufacturers.

B. Instrument

(1) Use an eddy current instrument that has an impedance plane display.

(2) The instruments that follow were used to help prepare this procedure.

(a) 500D; Olympus NDT

(b) Nortec 600; Olympus NDT

(c) Phasec 2D/3D; GE Inspection Technologies

C. Probes

(1) To do the LFEC inspection, use a reflection ring probe that:

(a) Has a minimum inner diameter of 0.42 inch (10.6 mm) and a maximum outer diameter of 0.75 inch (19.1 mm).

(b) Can operate between 1 and 5 kHz.

(c) The LFEC ring probes that follow were used to help prepare this procedure.

1) RDP.75/.45-200; Techna NDT

2) AF-4076; Aerofab NDT

(2) To do the HFEC inspection, use a probe that:

(a) Operates from 50 to 500 kHz.

BOEING PROPRIETARY - Copyright © Unpublished Work - See title page for details

(b) Has a 90 degree angle with a zero drop or a blade probe.

(c) The HFEC pencil probes that follow were used to help prepare this procedure.

NOTE: Shielded probes are recommended.

1) MTF9003-50B; NDT Engineering

2) NEC-1016-4/TF/FE; NDT Engineering

D. Reference Standards

(1) Make reference standard NDT3248 to help calibrate the instrument to examine the web flange of the upper chord for cracks. See Figure 2 for data about reference standard NDT3248.

(2) Use reference standard 126, or an equivalent, to help calibrate the instrument to examine the web of the front spar for cracks. See Part 6, 51-00-00, Procedure 23, for data about reference standard 126.

3. Prepare for the Inspection

A. Remove the leading edge panels of the horizontal stabilizer between LE STA 69.93 and LE STA 198.23.

B. Identify the STAB STA 75.0 to 175.5 inspection area shown in Figure 1.

C. Remove paint only if it is loose.

D. If necessary, remove the fillet seal from the top edge of the web and also remove the cap seals that are around the collars of the fasteners in the inspection area.

4. Instrument Calibration

A. Calibrate the instrument as specified in Part 6, 51-00-00, Procedure 9, Paragraph 5, to examine the web flange of the upper chord of the front spar for cracks with LFEC. During the calibration:

(1) Set the instrument frequency between 900 Hz and 1 kHz.

(2) Use reference standard NDT3248.

B. Calibrate the instrument as specified in Part 6, 51-00-00, Procedure 23, Paragraph 5, to examine the web at the upper chord of the front spar for cracks with HFEC.

5. Inspection Procedure

A. Examine the web flange of the upper chord at the front spar of the horizontal stabilizer from STAB STA 75.0 to 175.5 as specified in Part 6, 51-00-00, Procedure 9, Paragraph 6, and the steps that follow. See Figure 1, flagnote 1.

NOTE: The upper chord thickness changes that occur in the inspection area will cause the balance point to gradually increase or decrease.

(1) Calibrate the instrument as specified in Paragraph 4.A. (LFEC).

(2) Start the inspection at STAB STA 75.0 and examine the web flange of the upper chord for subsurface cracks at the fastener locations. During the inspection:

NOTE: It is not necessary to examine the two fastener locations that are at the web splice at STAB STA 111.10. See Figure 1, flagnote 3.

(a) Monitor the balance point carefully. If the balance point increases by 10% of full screen height (FSH), it is necessary to balance the instrument again.

BOEING PROPRIETARY - Copyright © Unpublished Work - See title page for details

B. Examine the web at the upper chord of the front spar of the horizontal stabilizer from STAB STA 75.0 to 175.5 as specified in Part 6, 51-00-00, Procedure 23, and the steps that follow. See Figure 1, flagnote 2.

(1) Calibrate the instrument as specified in Paragraph 4.B. (HFEC).

(2) Make a scan along the top edge of the web. See Figure 1, flagnote 2.

NOTE: It is not necessary to examine inboard and outboard web at the web splice (STAB STA 111.10). See Figure 1, flagnote 3.

C. Do Paragraph 5.A. and Paragraph 5.B. again to examine the web at the upper chord and the web flange of the upper chord at the front spar of the opposite horizontal stabilizer.

6. Inspection Results

A. Refer to Part 6, 51-00-00, Procedure 9, Paragraph 7, for instructions to help make an analysis of the LFEC indications that occur during the inspection.

B. Refer to Part 6, 51-00-00, Procedure 23, Paragraph 7, for instructions to help make an analysis of the HFEC indications that occur during the inspection.

BOEING PROPRIETARY - Copyright © Unpublished Work - See title page for details

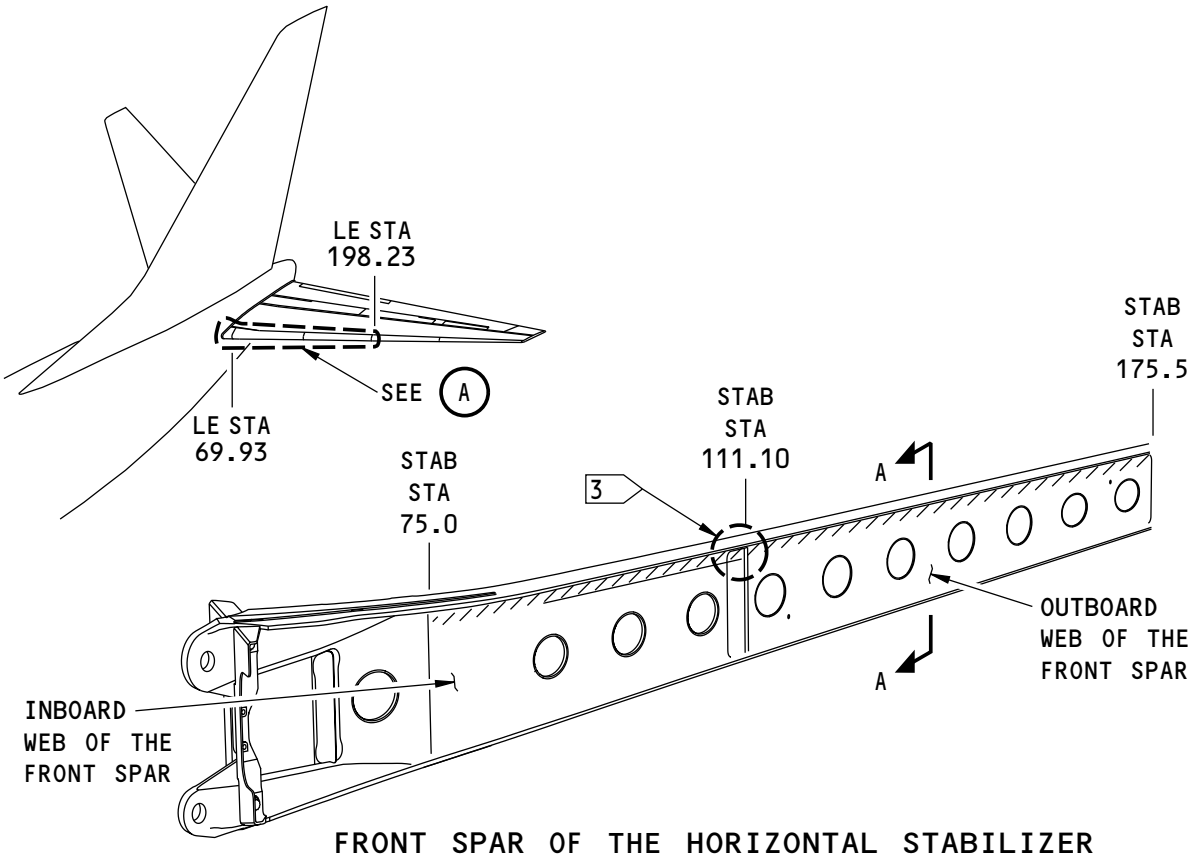

FRONT SPAR OF THE HORIZONTAL STABILIZER
(THE LEFT SIDE IS SHOWN; THE RIGHT SIDE IS OPPOSITE)

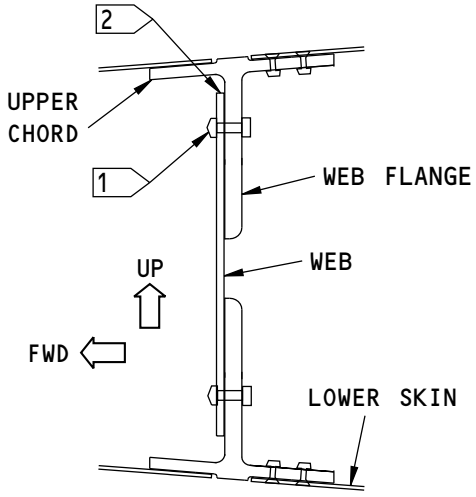

STAB STA 75.0 TO 175.5
A–A

A

NOTES:

INSPECTION AREA

1 EXAMINE THE FASTENER LOCATIONS FROM STAB 75.0 TO 175.5

2 MAKE A SCAN ALONG THE TOP EDGE OF THE WEB FROM STAB STA 75.0 TO 175.5

3 WEB SPLICE: IT IS NOT NECESSARY TO EXAMINE THE WEB AND WEB FLANGE (2 FASTENER LOCATIONS) OF THE UPPER CHORD AT THIS LOCATION.

2476373 S0000580596_V1

Inspection Area
Figure 1

BOEING PROPRIETARY - Copyright © Unpublished Work - See title page for details

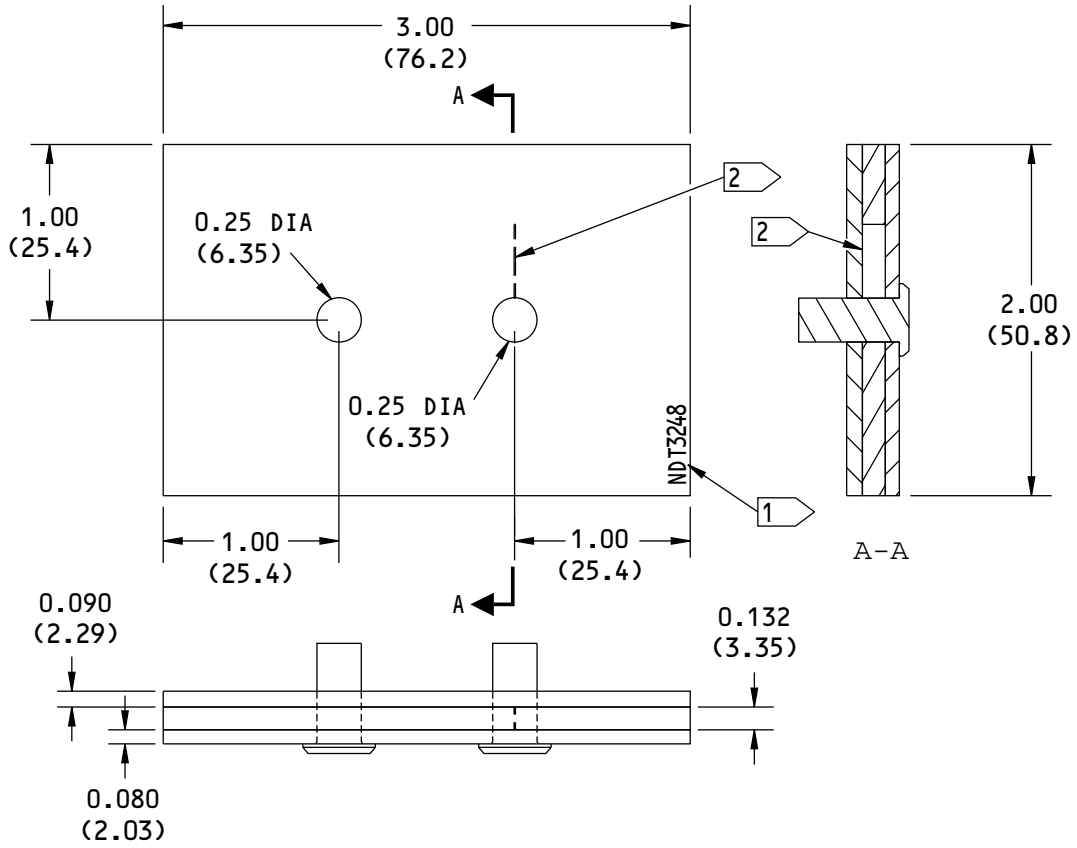

NOTES:

- ALL DIMENSIONS ARE IN INCHES (MILLIMETERS ARE IN PARENTHESES)
- MATERIAL: 7075-T7, 7150-T7, 6061-T4, 2024-T6/T8 OR EQUIVALENT AIRCRAFT GRADE ALUMINUM
- FASTENERS: BACB30VT, BACC30BL (ALTERNATIVE FASTENERS CAN BE USED IF THEY HAVE THE SAME CONFIGURATION AS THE FASTENERS SPECIFIED)
- SURFACE ROUGHNESS: 63 Ra OR BETTER
- TOLERANCE (UNLESS SPECIFIED DIFFERENTLY):

INCHES	MILLIMETERS
X.XXX = ±0.005	X.XX = ± 0.10
X.XX = ±0.025	X.X = ± 0.5
X.X = ±0.050	X = ± 1

1 ETCH OR STAMP THE REFERENCE STANDARD NUMBER, NDT3248, AT APPROXIMATELY THIS LOCATION

2 EDM THROUGH NOTCH:
LENGTH: 0.418 (10.61)
WIDTH: 0.007 (0.18)

2476374 S0000580597_V1

Reference Standard NDT3248
Figure 2

BOEING PROPRIETARY - Copyright © Unpublished Work - See title page for details

PART 6 - EDDY CURRENT

HORIZONTAL STABILIZER - CENTER SECTION - PRIMARY AND THRUST BEAMS

1. Purpose

A. Use this procedure to help find cracks in the horizontal flange of the upper chord of the primary beams at the rear spar joint and the lower chord of the thrust beams at the front spar joint. The primary beams and the thrust beams are in the center section of the horizontal stabilizer. See Figure 1 for the inspection areas.

B. All parts to be examined by this procedure are aluminum.

C. It is necessary to get internal access to the center section of the horizontal stabilizer to do this procedure.

D. 737 Maintenance Planning Document (MPD) Damage Tolerance Record (DTR) Check Form Reference:

(1) Item: E-30B (horizontal flanges of the upper chord of the primary beam)

(2) Item: E-31B (horizontal flanges of the lower chord of the thrust beam)

2. Equipment

A. General

(1) Use inspection equipment that can be calibrated on the reference standard as specified in Paragraph 4.

(2) Refer to Part 1, 51-01-00, for data about the equipment manufacturers.

B. Instrument

(1) Use an instrument that has an impedance plane display and:

(a) can operate at a frequency between 400 and 500 Hz.

(b) can be calibrated as specified in the calibration instructions of this procedure.

(2) The instruments that follow were used to help prepare this procedure.

(a) Phasec 2D; GE Inspection Technologies

(b) Nortec 500D; Olympus

C. Probe

(1) Use a reflection ring probe with an inner diameter of 0.51 inch (13.0 mm) that can operate at a frequency between 400 and 500 Hz.

(2) The ring probe that follows was used to help prepare this procedure.

(a) AF-4092; Aerofab NDT

D. Reference Standard

(1) Use reference standard NDT3255, or an equivalent, to help calibrate the instrument. See Figure 2 for data about reference standard NDT3255.

E. Probe Guides

(1) It is necessary to use two NDT3255G probe guides to do the calibration instructions specified in Paragraph 4. See Figure 2 for data about the NDT3255G probe guides.

BOEING PROPRIETARY - Copyright © Unpublished Work - See title page for details

3. **Prepare for the Inspection**

   A. Get access to the center section of the horizontal stabilizers as follows:

      (1) Use access door 3701 (blowout door), the cutout in the BS 1088 bulkhead, and the center section area between BS 1088 and BS 1156. See Figure 1.

   B. Clean the inspection surface.

4. **Instrument Calibration**

   A. Connect the probe to the instrument and set the instrument frequency between 400 and 500 Hz.

   B. Set the horizontal and vertical gain to equal values or a 1:1 ratio.

   C. Add a 0.003 inch (0.08 mm) nonconductive shim to the top surface of reference standard NDT3255. Cut the shim as necessary to put the two NDT3255G probe guides into the two holes of reference standard NDT3255.

   D. Put the NDT3255G probe guides into the two holes of reference standard NDT3255.

   E. Put the probe on reference standard NDT3255 at probe position 1 as shown in Figure 3.

   F. Balance the instrument.

   G. Set the balance point at approximately 20% of full screen height (FSH) and 60% of full screen width (FSW) as shown in Figure 3, Detail I.

   H. Adjust the phase control so that the lift-off signal moves horizontally from right to left when the probe is lifted off the reference standard as shown in Figure 3, Detail I.

   I. Put the probe at probe position 2 as shown in Figure 3.

   J. Adjust the instrument gain to set the notch signal at 60% of FSH as shown in Figure 3, Detail I.

5. **Inspection Procedure**

   A. Calibrate the instrument as specified in Paragraph 4.

   B. Put the probe on one of the fasteners in the inspection area shown in Figure 1 and balance the instrument.

   C. Examine the horizontal flange of the chord for cracks at the other fastener locations in this inspection area.

   D. Go to Paragraph 6. for instructions to help make an analysis of the fastener locations that cause signals to occur that are 40 percent (or more) of FSH.

   E. Do Paragraph 5.B. thru Paragraph 5.D. again at the other inspection areas shown in Figure 1 to be examined.

6. **Inspection Results**

   A. A signal that is 40 percent (or more) of FSH is an indication of a possible crack.

   B. Compare the signal that occurs during the inspection to the signal you got from the notch in the reference standard during calibration.

   C. It is possible that the first fastener location used to balance the instrument has a crack. If this occurs, all the fastener holes that do not have cracks will cause the signal to move below the balance point. If you think you balanced the probe at a fastener location that has a crack in the chord, then put the probe on a different fastener in this inspection area and balance the instrument again.

BOEING PROPRIETARY - Copyright © Unpublished Work - See title page for details

D. To make sure an indication that is 40 percent (or more) of FSH is from a crack, remove the fastener and do an open hole eddy current inspection as specified in Part 6, 51-00-00, Procedure 11 or Part 6, 51-00-00, Procedure 16.

BOEING PROPRIETARY - Copyright © Unpublished Work - See title page for details

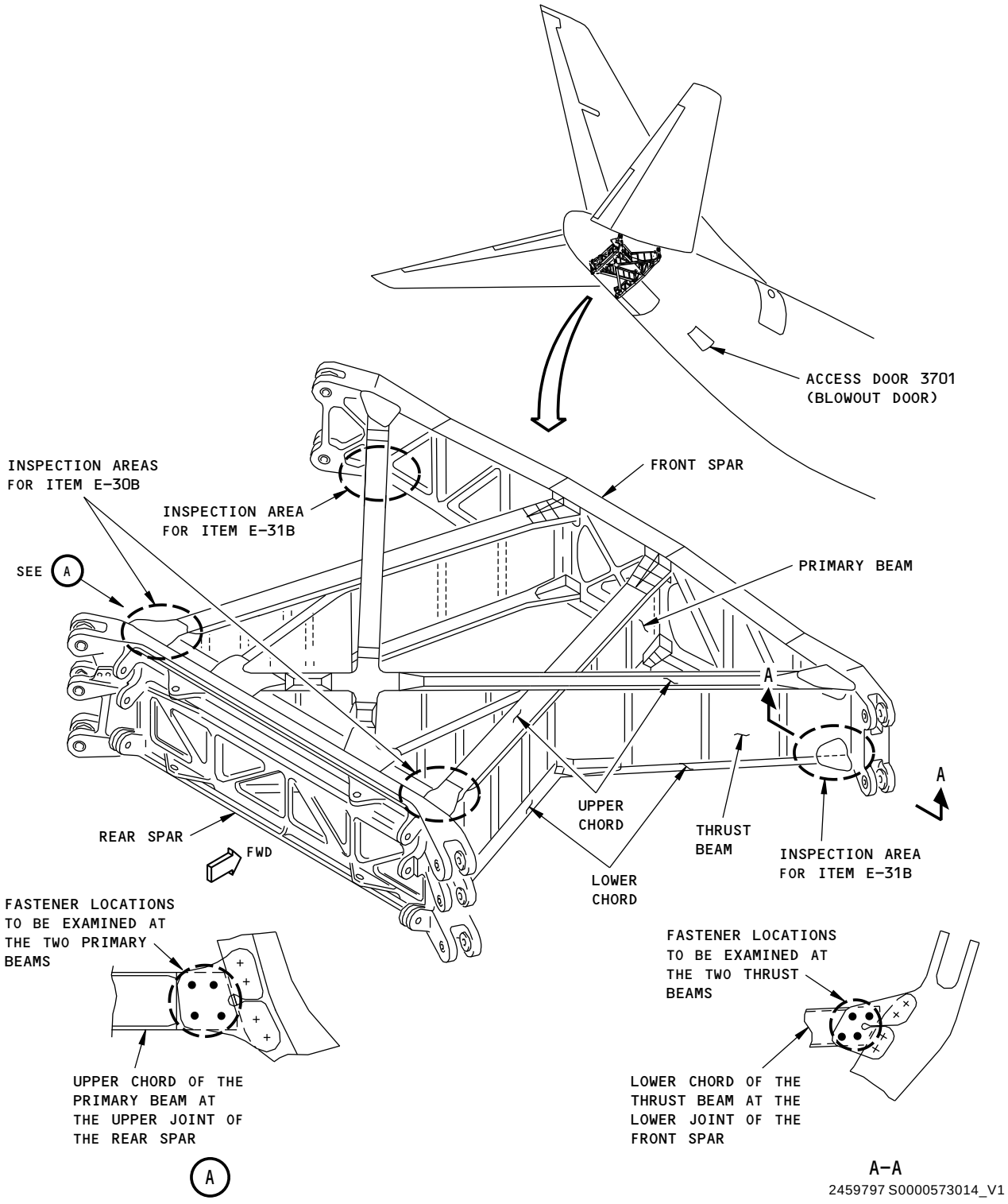

Inspection Areas
Figure 1

BOEING PROPRIETARY - Copyright © Unpublished Work - See title page for details

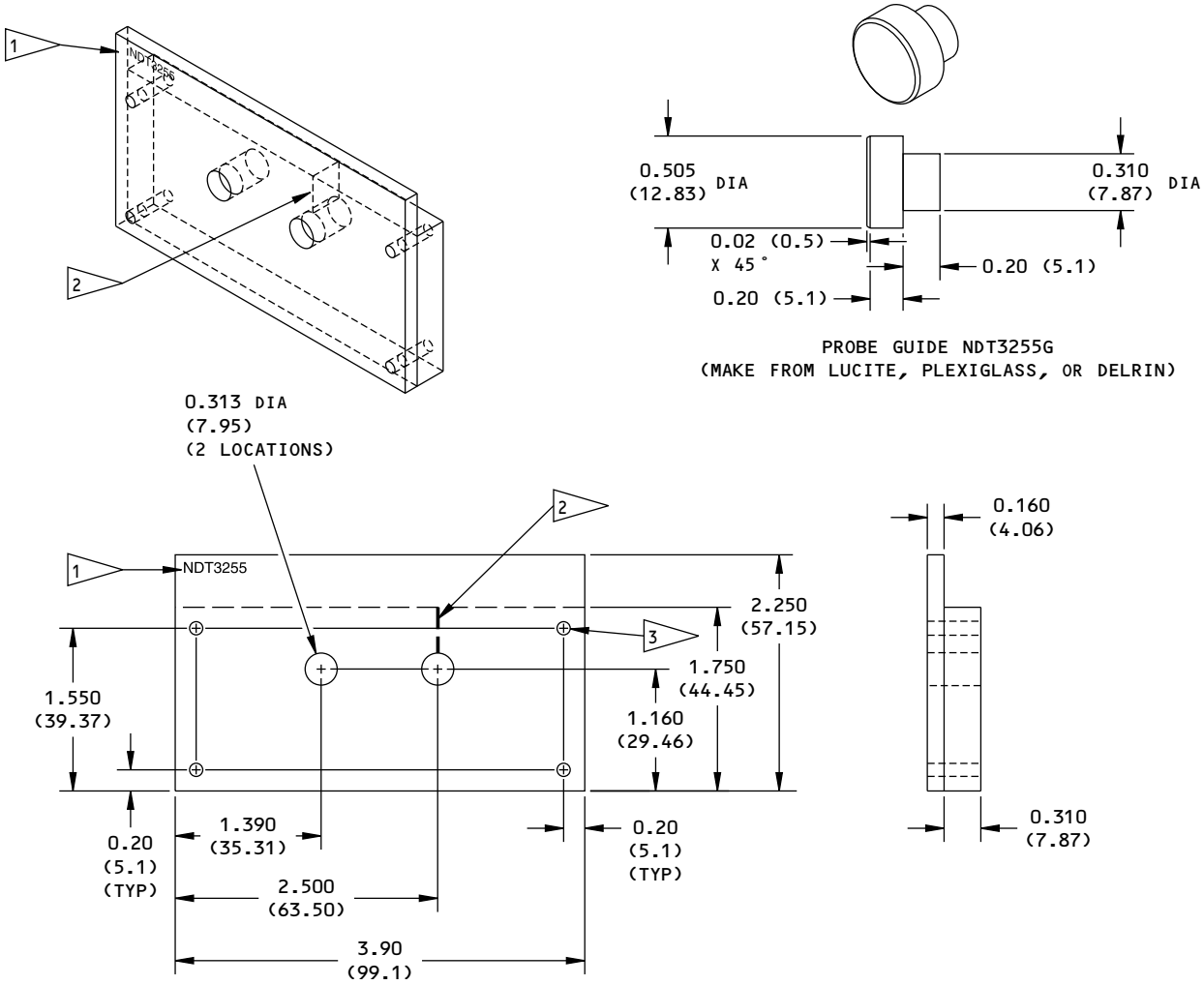

NOTES:

- MAKE TWO NDT3255G PROBE GUIDES TO USE DURING INSTRUMENT CALIBRATION
- ALL DIMENSIONS ARE IN INCHES (MILLIMETERS ARE IN PARENTHESES)
- SURFACE ROUGHNESS: 125 Ra OR BETTER
- MATERIAL: 7075-T6511 ALUMINUM (2024-T3 OR T4, 7050-T735XX, 7075-T735XX ARE OPTIONAL)
- TOLERANCE (UNLESS SPECIFIED DIFFERENTLY):

INCHES	MILLIMETERS	ANGULAR
X.XXX = ±0.005	X.XX = ±0.10	± 1°
X.XX = ±0.025	X.X = ±0.5	
X.X = ±0.050	X = ±1	

1 ETCH OR ENGRAVE THE REFERENCE STANDARD NUMBER, NDT3255, AT APPROXIMATELY THIS LOCATION

2 EDM NOTCH LENGTH: FROM THE HOLE TO THE EDGE.
WIDTH: 0.020 (0.51) MAXIMUM.
DEPTH: THROUGH THE THICKNESS OF THE SECOND LAYER

3 DRILL AND TAP A HOLE FOR A #8-32 PAN HEAD MACHINE SCREW (4 LOCATIONS) AND INSTALL THE SCREWS

2460193 S0000573017_V1

Reference Standard NDT3255 and Probe Guide NDT3255G
Figure 2

BOEING PROPRIETARY - Copyright © Unpublished Work - See title page for details

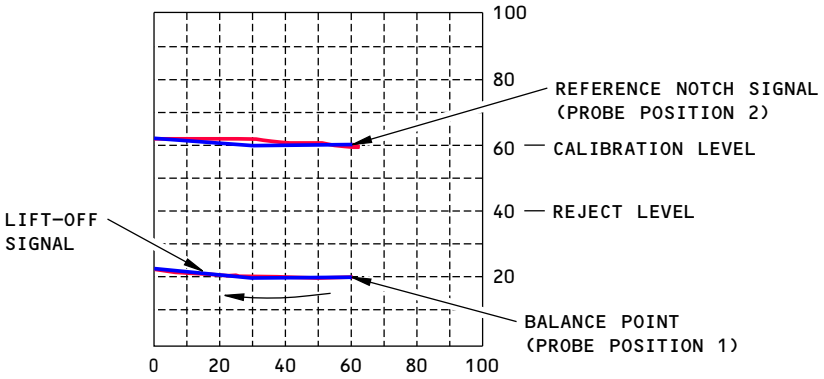

IMPEDANCE PLANE DISPLAY
DETAIL I

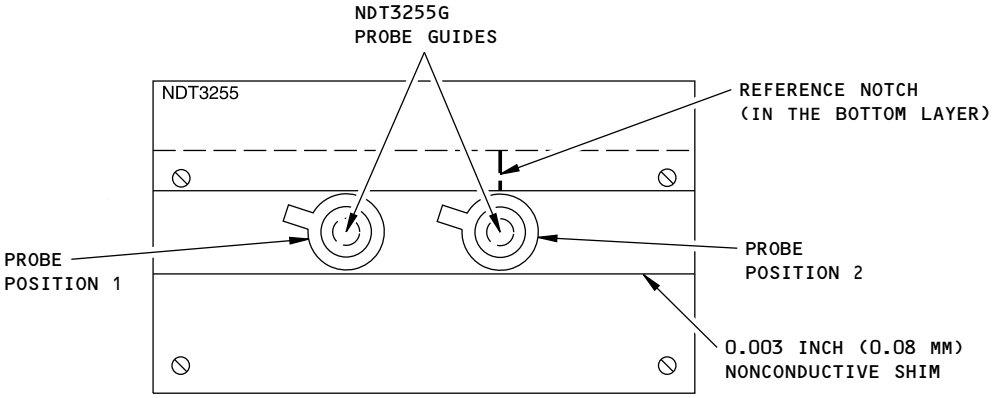

CALIBRATION PROBE POSITIONS
DETAIL II

2460229 S0000573018_V1

Instrument Calibration
Figure 3

BOEING PROPRIETARY - Copyright © Unpublished Work - See title page for details

PART 6 - EDDY CURRENT

HORIZONTAL STABILIZER - UPPER CHORD OF THE FRONT SPAR AT STAB STA 111.0 (LFEC)

1. **Purpose**

   A. Use this procedure to examine the upper chord of the front spar for cracks at STAB STA 111.0 of the horizontal stabilizer. There are only two fastener locations to be examined in the upper chord at STAB STA 111.0 where the inboard and outboard webs make a lap splice. See Figure 1 for the inspection area.

   B. The inboard and outboard webs and the upper chord are aluminum.

   C. This procedure uses low frequency eddy current (LFEC) with a ring probe that is put on each titanium bolt head in the inspection area. It is necessary to use only one ring probe to do this inspection. See Figure 1.

   D. This procedure uses an impedance plane display instrument.

   E. 737 Maintenance Planning Data (MPD) Damage Tolerance Rating (DTR) Check Form Reference:

      (1) Item: 55-10-06-4D

2. **Equipment**

   A. General

      (1) Use inspection equipment that can be calibrated on the reference standards as specified in Paragraph 4.

      (2) Refer to Part 1, 51-01-00, for data about the equipment manufacturers.

   B. Instrument

      (1) Use an eddy current instrument with an impedance plane display that:

         (a) Operates at a frequency between 590 and 610 Hz.

         (b) Can be calibrated as specified in the calibration instructions of this procedure.

      (2) The instruments that follow were used to help prepare this procedure.

         (a) Phasec 3D; GE Inspection Technologies

         (b) Nortec 2000; Olympus NDT

   C. Probes

      (1) Use a ring probe with an inner diameter that is between 0.40 and 0.45 inch (10.0 and 11.4 mm) that can operate at a frequency between 590 and 610 Hz.

         NOTE: There are some ring probes that have a 0.40 inch (10.0 mm) inner diameter but do not fit on the fastener. A probe that has a 0.40 inch (10.0 mm) inner diameter ring (or a 0.41 inch (10.4 mm)) is the best for this procedure. But if the ring probe with the 0.40 inch (10.0 mm) inner diameter that you have does not fit on the fastener, use a different ring probe but one that has an inner diameter that is not larger than 0.45 inch (11.4 mm).

      (2) The ring probes that follow were used to help prepare this procedure.

         (a) RDP 1.0-.4/2K (Reflection, 0.43 inch (10.9 mm) inner diameter); Techna NDT

         (b) RDP .8-100H-5 (Reflection, 0.40 inch (10.1 mm) inner diameter); Techna NDT

         (c) RR019-5/TF (Reflection, 0.45 inch (11.4 mm) inner diameter); Olympus NDT

         (d) RDP.9/.4-500H CFRP (Reflection, 0.41 inch (10.4 mm) inner diameter); Olympus NDT

BOEING PROPRIETARY - Copyright © Unpublished Work - See title page for details

D. Reference Standard

(1) Make reference standard NDT3265. See Figure 2 for data about reference standard NDT3265.

3. Prepare for the Inspection

A. Remove the leading edge skin from the horizontal stabilizer at STAB STA 111.10.

B. Clean the front spar web of the horizontal stabilizer at the upper chord location at STAB STA 111.10 that is shown in Figure 1. There are two fasteners at this location.

C. Clean the front spar web of the horizontal stabilizer at the lower chord location at STAB STA 111.10 that is shown in Figure 1. These are not the fastener locations to be examined. The probe will be put at these fastener locations to balance the instrument.

4. Instrument Calibration

A. Set the instrument frequency between 590 and 610 Hz.

B. Put the ring probe on reference standard NDT3265 at probe position 1 as shown in Detail II of Figure 3.

C. Balance the instrument.

D. Move the probe lightly above the fastener until the signal is at its minimum height and balance the instrument again.

E. Set the balance point at approximately 20 percent of full screen height (FSH) and approximately 60 percent of full screen width (FSW) as shown in Detail I of Figure 3.

F. Adjust the phase control so that the lift-off signal moves horizontally from right to left when the probe is lifted off of the reference standard. See Detail I in Figure 3.

G. Put the probe on the reference standard at probe position 2 as shown in Detail II of Figure 3. This is the notch location on the reference standard.

H. Move the probe lightly above the fastener until the signal is at its minimum height.

I. Adjust the instrument gain to put the maximum signal from the notch at 60 percent of FSH as shown in Detail I of Figure 3. If necessary, set the horizontal gain from 6 to 12 dB lower than the vertical gain to keep the signal on the screen display.

5. Inspection Procedure

NOTE: The two fasteners on the lower chord of the front spar at STAB STA 111.10 are used to balance the instrument. The instrument is balanced each time before the upper chord is examined at the two inspection fastener locations at STAB STA 111.10.

NOTE: It is possible that a collar or a bolt head could be on the forward side of the web in the inspection area.

A. Put the probe on the fastener on the web at the lower chord of the horizontal stabilizer at STAB STA 111.10. See Figure 1, flagnote 1.

B. Balance the instrument.

C. Put the probe on the fastener in the inspection area on the web of the upper chord at STAB STA 111.10. See Figure 1, flagnote 2. Make sure the fastener is in the center of the ring probe and monitor the instrument display for crack indications.

D. Put the probe on the fastener on the web at the lower chord of the horizontal stabilizer at STAB STA 111.10. See Figure 1, flagnote 3.

BOEING PROPRIETARY - Copyright © Unpublished Work - See title page for details

E. Put the probe on the fastener in the inspection area on the web of the upper chord at STAB STA 111.10. See Figure 1, flagnote 4. Make sure the fastener is in the center of the ring probe and monitor the instrument display for crack indications.

F. Do Paragraph 5.A. thru Paragraph 5.E. again to examine the upper chord for cracks on the other horizontal stabilizer.

6. Inspection Results

A. A signal that is 40% (or more) of FSH is a sign of a crack and the location that causes this signal to occur must be rejected. More analysis is necessary at locations that cause crack type signals to occur.

B. Compare the signal that occurs during the inspection to the signal that you get from the notch in the reference standard during calibration. See Paragraph 4. and Figure 3.

C. Do an open hole eddy current inspection as specified in Part 6, 51-00-00, Procedure 16, at all locations that cause crack signals to occur to make sure there is a crack.

BOEING PROPRIETARY - Copyright © Unpublished Work - See title page for details

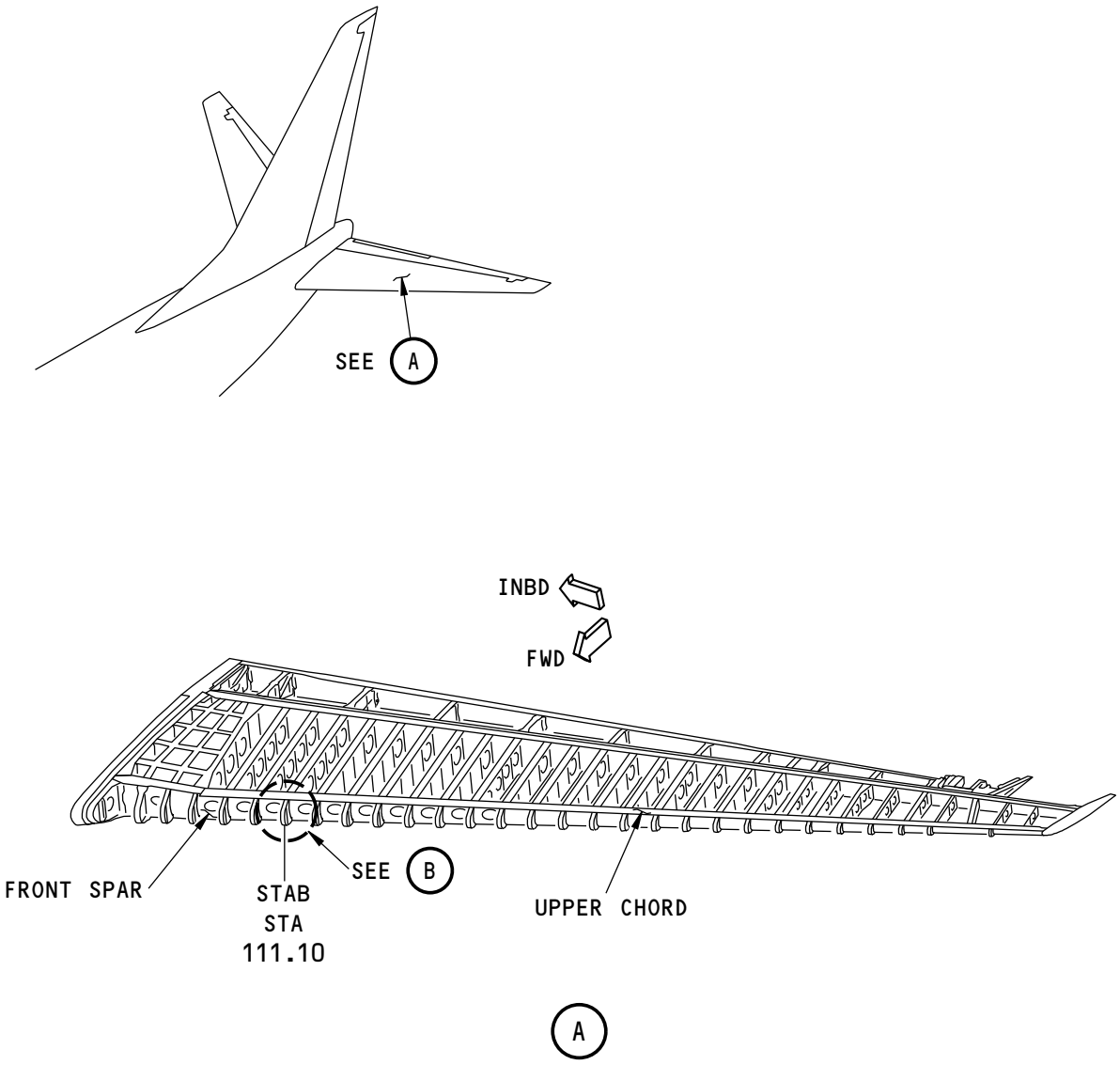

NOTE: THIS IS A VIEW OF THE LEFT HORIZONTAL STABILIZER WITH THE LEADING EDGE SKIN REMOVED; THE RIGHT HORIZONTAL STABILIZER IS OPPOSITE.

2487921 S0000585596_V1

Inspection Area
Figure 1 (Sheet 1 of 2)

BOEING PROPRIETARY - Copyright © Unpublished Work - See title page for details

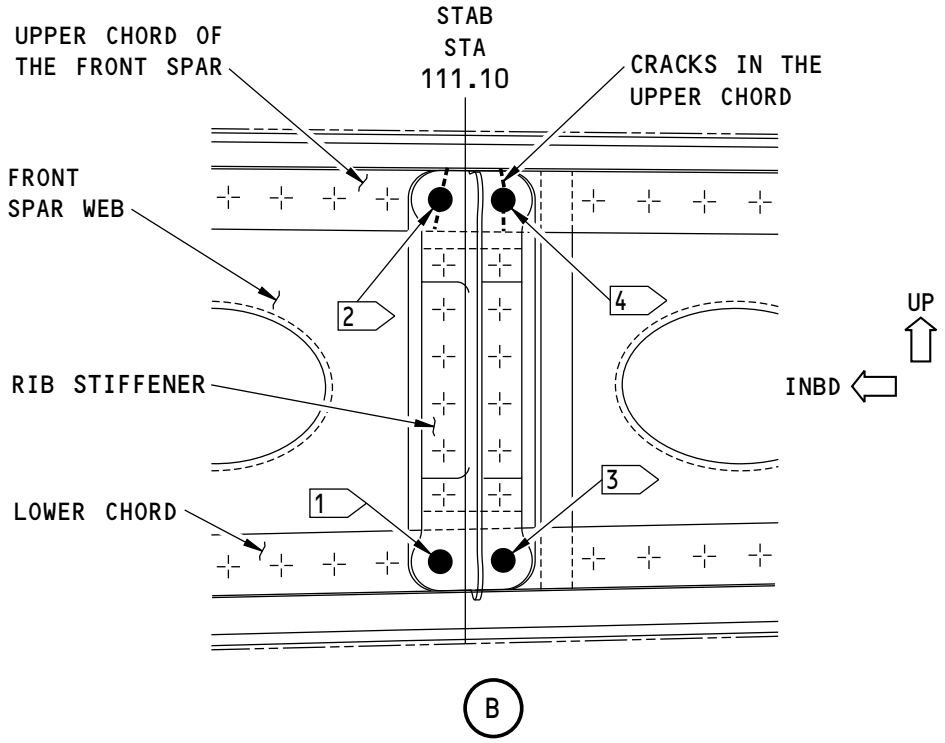

NOTE: THIS IS A VIEW OF THE INSPECTION AREA ON THE FRONT SPAR WEB OF THE LEFT HORIZONTAL STABILIZER AFTER THE LEADING EDGE SKIN IS REMOVED. THE RIGHT HORIZONTAL STABILIZER IS OPPOSITE.

1 PUT THE RING PROBE ON THIS FASTENER ON THE LOWER CHORD AND BALANCE THE INSTRUMENT BEFORE YOU EXAMINE THE UPPER CHORD AT THE FLAGNOTE 2 LOCATION.

2 AFTER THE INSTRUMENT IS BALANCED WITH THE RING PROBE ON THE FASTENER AT THE FLAGNOTE 1 LOCATION (ON THE LOWER CHORD), EXAMINE THIS FASTENER LOCATION WITH THE RING PROBE.

3 PUT THE RING PROBE ON THIS FASTENER ON THE LOWER CHORD AND BALANCE THE INSTRUMENT BEFORE YOU EXAMINE THE UPPER CHORD AT THE FLAGNOTE 4 LOCATION.

4 AFTER THE INSTRUMENT IS BALANCED WITH THE RING PROBE ON THE FASTENER AT THE FLAGNOTE 3 LOCATION (ON THE LOWER CHORD), EXAMINE THIS FASTENER LOCATION WITH THE RING PROBE.

2488155 S0000585597_V1

Inspection Area
Figure 1 (Sheet 2 of 2)

BOEING PROPRIETARY - Copyright © Unpublished Work - See title page for details

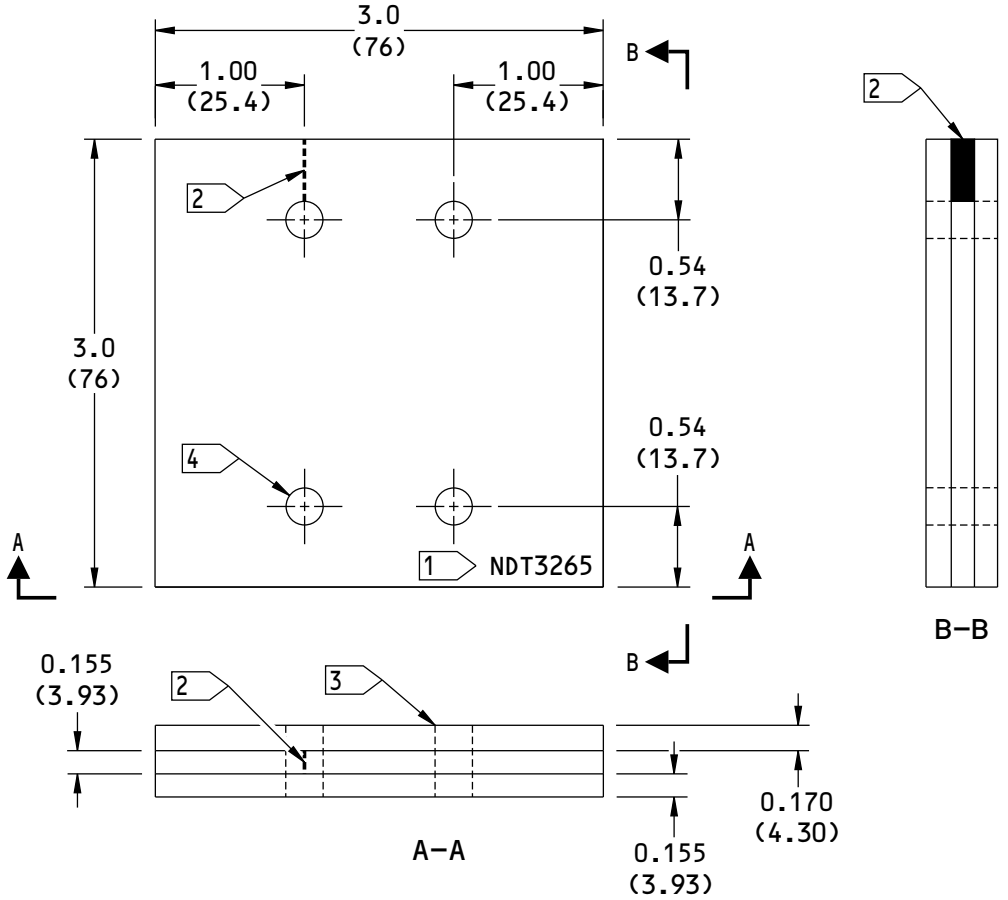

NOTES:

- ALL DIMENSIONS ARE IN INCHES (MILLIMETERS ARE IN PARENTHESES)
- TOLERANCE (UNLESS SPECIFIED DIFFERENTLY):

INCHES	MILLIMETERS
X.XXX = ±0.005	X.XX = ±0.1
X.XX = ±0.025	X.X = ±0.5
X.X = ±0.050	X = ±1

- MAKE ALL 3 PLATES FROM 7150-T77511, 7075-T7351, OR 7055-T7751 ALUMINUM (CLAD OR BARE)
- BOLTS (4 LOCATIONS): BACB30VT8K7
- COLLARS (4 LOCATIONS): BACC30BL8
- SURFACE ROUGHNESS: 63 Ra OR BETTER

1 ETCH OR STEEL STAMP THE REFERENCE STANDARD NUMBER, NDT3265, AT APPROXIMATELY THIS LOCATION

2 EDM NOTCH (MIDDLE PLATE):
LENGTH: FROM THE EDGE OF THE HOLE TO THE EDGE OF THE MIDDLE PLATE
DEPTH: THROUGH THE THICKNESS
WIDTH: 0.020 (0.50) MAXIMUM

3 INSTALL THE BOLT WITH THE BOLT HEADS ON THIS SURFACE

4 DRILL 4 HOLES: 0.250 (6.35) DIAMETER

2488358 S0000585598_V1

Reference Standard NDT3265
Figure 2

BOEING PROPRIETARY - Copyright © Unpublished Work - See title page for details

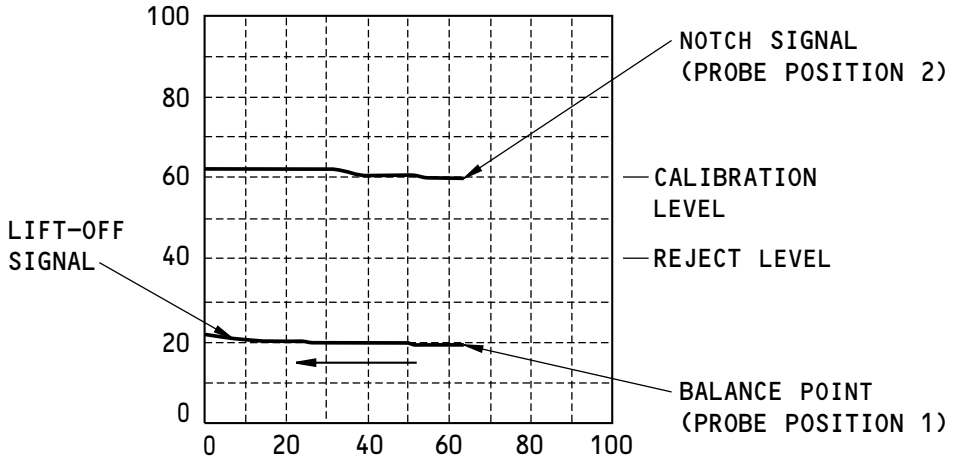

IMPEDANCE PLANE DISPLAY
DETAIL I

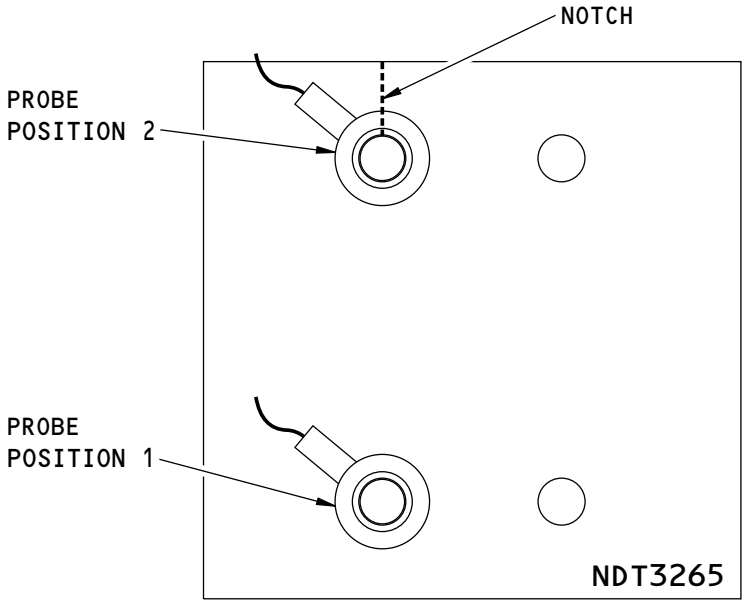

DETAIL II

INSTRUMENT CALIBRATION

2488360 S0000585599_V1

Instrument Calibration
Figure 3

BOEING PROPRIETARY - Copyright © Unpublished Work - See title page for details