CHAPTER 34

NAVIGATION

CHAPTER 34
NAVIGATION

CH-SC-SU	Schem	Page	Sheet	Date
34–EFFECTIVE PAGES				
		1 thru 3		Jun 21/2016
		4		BLANK
34–CONTENTS				
R		1		Jun 21/2016
R		2		Jun 21/2016
R		3		Jun 21/2016
R		4		Jun 21/2016
R		5		Jun 21/2016
R		6		Jun 21/2016
R		7		Jun 21/2016
R		8		Jun 21/2016
R		9		Jun 21/2016
		10		BLANK
34–ALPHABETICAL INDEX				
		1		Aug 15/2013
		2		Aug 15/2013
34-16-11				
R		1		Jun 21/2016
34-16-21				
R		1		Jun 21/2016
34-21-11				
		1		Dec 10/2015
R		2		Jun 21/2016
R		3		Jun 21/2016
34-21-12				
R		1		Jun 21/2016
34-21-13				
		1	1	Nov 18/2013
			2	Nov 18/2013
		2	1	Nov 18/2013
			2	Nov 18/2013
		3	1	Apr 17/2014
			2	Apr 17/2014
		4	1	Jan 12/2015
			2	Jan 12/2015
		5	1	Mar 14/2016
			2	Mar 14/2016
R		6	1	Jun 21/2016
R			2	Jun 21/2016
34-21-14				
		1	1	Aug 15/2013
			2	Aug 15/2013
		2	1	Apr 17/2014
			2	Apr 17/2014
		3	1	Aug 31/2015
			2	Aug 31/2015
		4	1	Mar 14/2016
			2	Mar 14/2016
		5	1	Dec 10/2015
			2	Dec 10/2015
34-21-15				
R		1		Jun 21/2016
34-21-16				
R		1		Jun 21/2016
34-21-21				
		1		Dec 10/2015
		2		Dec 10/2015
R		3		Jun 21/2016
R		4		Jun 21/2016
34-21-22				
R		1		Jun 21/2016
34-21-23				
		1	1	Nov 18/2013
			2	Nov 18/2013
		2	1	Nov 18/2013
			2	Nov 18/2013
		3	1	Mar 14/2016
			2	Mar 14/2016
R		4	1	Jun 21/2016
R			2	Jun 21/2016
34-21-24				
		1	1	Aug 15/2013
			2	Aug 15/2013
		2	1	Aug 31/2015
			2	Aug 31/2015
		3	1	Mar 14/2016
			2	Mar 14/2016
		4	1	Dec 10/2015
			2	Dec 10/2015
34-24-15				
R		1		Jun 21/2016
34-31-11				
R		1	1	Jun 21/2016
R			2	Jun 21/2016
R		2	1	Jun 21/2016
R			2	Jun 21/2016
34-31-21				
R		1	1	Jun 21/2016
R			2	Jun 21/2016
R		2	1	Jun 21/2016
R			2	Jun 21/2016
34-32-11				
R		1		Jun 21/2016
34-33-11				
R		1		Jun 21/2016
34-33-21				
		1		Aug 15/2013
R		2		Jun 21/2016
34-36-11				
R		1	1	Jun 21/2016
R			2	Jun 21/2016

A = Added, R = Revised, D = Deleted, O = Overflow

BOEING PROPRIETARY - Copyright © Unpublished Work - See title page for details

CHAPTER 34
NAVIGATION

	CH-SC-SU	Schem	Page	Sheet	Date
	34-36-12				
R			1		Jun 21/2016
	34-36-13				
R			1		Jun 21/2016
	34-36-14				
R			1		Jun 21/2016
	34-41-11				
			1	1	Nov 18/2013
				2	Nov 18/2013
				3	Nov 18/2013
			2	1	Nov 18/2013
				2	Nov 18/2013
				3	Nov 18/2013
R			3	1	Jun 21/2016
R				2	Jun 21/2016
R				3	Jun 21/2016
	34-45-11				
R			1		Jun 21/2016
	34-45-21				
R			1	1	Jun 21/2016
R				2	Jun 21/2016
	34-49-11				
			1	1	Oct 14/2014
				2	Aug 15/2013
				3	Aug 15/2013
				4	Aug 15/2013
				5	Aug 15/2013
			2	1	Oct 14/2014
				2	Nov 18/2013
				3	Nov 18/2013
				4	Nov 18/2013
				5	Nov 18/2013
R			3	1	Jun 21/2016
R				2	Jun 21/2016
R				3	Jun 21/2016
R				4	Jun 21/2016
R				5	Jun 21/2016
	34-51-11				
R			1	1	Jun 21/2016
R				2	Jun 21/2016
R			2	1	Jun 21/2016
R				2	Jun 21/2016
	34-51-21				
R			1	1	Jun 21/2016
R				2	Jun 21/2016
R			2	1	Jun 21/2016
R				2	Jun 21/2016
	34-51-41				
R			1	1	Jun 21/2016
R				2	Jun 21/2016
R				3	Jun 21/2016
	34-53-11				
			1	1	Aug 15/2013
R				2	Jun 21/2016
R			2	1	Jun 21/2016
R				2	Jun 21/2016
			3	1	Mar 14/2016
R				2	Jun 21/2016
	34-53-21				
			1	1	Aug 15/2013
R				2	Jun 21/2016
R			2	1	Jun 21/2016
R				2	Jun 21/2016
	34-53-31				
R			1		Jun 21/2016
	34-55-11				
R			1	1	Jun 21/2016
R				2	Jun 21/2016
	34-55-21				
R			1	1	Jun 21/2016
R				2	Jun 21/2016
	34-57-11				
			1		Aug 15/2013
R			2	1	Jun 21/2016
R				2	Jun 21/2016
	34-57-21				
			1		Aug 15/2013
R			2	1	Jun 21/2016
R				2	Jun 21/2016
	34-58-11				
			1		Aug 15/2013
			2	1	Apr 17/2014
				2	Apr 17/2014
R			3	1	Jun 21/2016
R				2	Jun 21/2016
			4	1	May 15/2015
				2	May 15/2015
R			5	1	Jun 21/2016
R				2	Jun 21/2016
	34-58-21				
			1		Aug 15/2013
			2	1	Mar 14/2016
				2	Mar 14/2016
R			3	1	Jun 21/2016
R				2	Jun 21/2016
	34-61-11				
			1	1	May 15/2015
				2	May 15/2015
R			2	1	Jun 21/2016
R				2	Jun 21/2016
			3	1	Mar 14/2016
				2	Mar 14/2016

A = Added, R = Revised, D = Deleted, O = Overflow

BOEING PROPRIETARY - Copyright © Unpublished Work - See title page for details

CHAPTER 34
NAVIGATION

	CH-SC-SU	Schem	Page	Sheet	Date
	34-61-12				
R			1		Jun 21/2016
	34-61-13				
R			1		Jun 21/2016
	34-61-14				
			1	1	Aug 15/2013
				2	Aug 15/2013
				3	Aug 15/2013
				4	Feb 14/2014
			2	1	Nov 18/2013
				2	Nov 18/2013
				3	Nov 18/2013
				4	Nov 18/2013
			3	1	Apr 17/2014
				2	Apr 17/2014
				3	Apr 17/2014
				4	Apr 17/2014
			4	1	Oct 14/2014
				2	Oct 14/2014
				3	Oct 14/2014
				4	Oct 14/2014
			5	1	May 15/2015
				2	May 15/2015
				3	May 15/2015
				4	May 15/2015
			6	1	Mar 14/2016
				2	Mar 14/2016
				3	Mar 14/2016
				4	Mar 14/2016
			7	1	May 15/2015
				2	May 15/2015
				3	May 15/2015
R			8	1	Jun 21/2016
R				2	Jun 21/2016
R				3	Jun 21/2016
	34-61-15				
			1	1	Aug 15/2013
				2	Aug 15/2013
			2	1	Feb 14/2014
				2	Feb 14/2014
				3	Feb 14/2014
			3	1	Apr 17/2014
				2	Apr 17/2014
				3	Apr 17/2014
			4	1	Jan 12/2015
				2	Jan 12/2015
				3	Jan 12/2015
			5	1	Jan 12/2015
				2	Jan 12/2015
				3	Jan 12/2015
			6	1	Mar 14/2016
				2	Mar 14/2016
	34-61-15 (cont.)		6		
				3	Mar 14/2016
R			7	1	Jun 21/2016
R				2	Jun 21/2016
R				3	Jun 21/2016
	34-61-16				
R			1		Jun 21/2016
	34-61-17				
R			1		Jun 21/2016
	34-61-18				
R			1		Jun 21/2016
	34-61-19				
R			1	1	Jun 21/2016
R				2	Jun 21/2016
R			2	1	Jun 21/2016
R				2	Jun 21/2016
	34-61-21				
			1		Jun 29/2015
			2		Mar 14/2016
R			3		Jun 21/2016
	34-61-22				
			1		Aug 15/2013
R			2		Jun 21/2016
	34-61-23				
			1		Aug 15/2013
R			2		Jun 21/2016
	34-61-24				
R			1		Jun 21/2016
	34-61-26				
R			1		Jun 21/2016

A = Added, R = Revised, D = Deleted, O = Overflow

BOEING PROPRIETARY - Copyright © Unpublished Work - See title page for details

CHAPTER 34
NAVIGATION

Title	CH-SC-SU	Schem	Page	Sheet	Date	Effectivity
OVERSPEED WARNING						
AIR DATA INERTIAL REFERENCE SYSTEM OVERSPEED TEST LEFT	34-16-11		1		Jun 21/2016	ALL
AIR DATA INERTIAL REFERENCE SYSTEM OVERSPEED TEST RIGHT	34-16-21		1		Jun 21/2016	ALL
AIR DATA INERTIAL REFERENCE SYSTEM (ADIRS)						
AIR DATA INERTIAL REFERENCE SYSTEM (ADIRS) - LEFT CONTROL & WARNING	34-21-11		1		Dec 10/2015	YT101-YT104
			2		Jun 21/2016	YT105-YT119 YT126-YT129
			3		Jun 21/2016	YT120 YT130-YT133
AIR DATA INERTIAL REFERENCE SYSTEM (ADIRS) - LEFT SYSTEM INPUTS	34-21-12		1		Jun 21/2016	ALL
AIR DATA INERTIAL REFERENCE SYSTEM (ADIRS) - LEFT IR OUTPUTS	34-21-13		1	1	Nov 18/2013	YT101-YT102
				2	Nov 18/2013	YT101-YT102
			2	1	Nov 18/2013	YT103
				2	Nov 18/2013	YT103
			3	1	Apr 17/2014	YT104-YT105
				2	Apr 17/2014	YT104-YT105
			4	1	Jan 12/2015	YT106-YT110
				2	Jan 12/2015	YT106-YT110
			5	1	Mar 14/2016	YT111-YT120
				2	Mar 14/2016	YT111-YT120
			6	1	Jun 21/2016	YT126-YT133
				2	Jun 21/2016	YT126-YT133
AIR DATA INERTIAL REFERENCE SYSTEM (ADIRS) - LEFT ADR OUTPUTS	34-21-14		1	1	Aug 15/2013	YT101-YT103
				2	Aug 15/2013	YT101-YT103
			2	1	Apr 17/2014	YT104-YT105

BOEING PROPRIETARY - Copyright © Unpublished Work - See title page for details

CHAPTER 34
NAVIGATION

Title	CH-SC-SU	Schem	Page	Sheet	Date	Effectivity
AIR DATA INERTIAL REFERENCE SYSTEM (ADIRS) - LEFT ADR OUTPUTS (cont.)	34-21-14			2	Apr 17/2014	YT104-YT105
			3	1	Aug 31/2015	YT106-YT115
				2	Aug 31/2015	YT106-YT115
			4	1	Mar 14/2016	YT116-YT120
				2	Mar 14/2016	YT116-YT120
			5	1	Dec 10/2015	YT126-YT131
				2	Dec 10/2015	YT126-YT131
AIR DATA INERTIAL REFERENCE SYSTEM - IR SIGNAL SWITCHING	34-21-15		1		Jun 21/2016	ALL
ADIRS - NO COOLING AND "ON DC" OPERATION WARNING	34-21-16		1		Jun 21/2016	ALL
AIR DATA INERTIAL REFERENCE SYSTEM (ADIRS) - RIGHT CONTROL & WARNING	34-21-21		1		Dec 10/2015	YT101-YT104
			2		Dec 10/2015	YT105
			3		Jun 21/2016	YT106-YT119 YT126-YT129
			4		Jun 21/2016	YT120 YT130-YT133
AIR DATA INERTIAL REFERENCE SYSTEM (ADIRS) - RIGHT SYSTEM INPUTS	34-21-22		1		Jun 21/2016	ALL
AIR DATA INERTIAL REFERENCE SYSTEM (ADIRS) - RIGHT IR OUTPUTS	34-21-23		1	1	Nov 18/2013	YT101-YT102
				2	Nov 18/2013	YT101-YT102
			2	1	Nov 18/2013	YT103
				2	Nov 18/2013	YT103
			3	1	Mar 14/2016	YT104-YT120
				2	Mar 14/2016	YT104-YT120
			4	1	Jun 21/2016	YT126-YT133
				2	Jun 21/2016	YT126-YT133

BOEING PROPRIETARY - Copyright © Unpublished Work - See title page for details

CHAPTER 34
NAVIGATION

Title	CH-SC-SU	Schem	Page	Sheet	Date	Effectivity
AIR DATA INERTIAL REFERENCE SYSTEM (ADIRS) - RIGHT ADR OUTPUTS	34-21-24		1	1	Aug 15/2013	YT101-YT103
				2	Aug 15/2013	YT101-YT103
			2	1	Aug 31/2015	YT104-YT115
				2	Aug 31/2015	YT104-YT115
			3	1	Mar 14/2016	YT116-YT120
				2	Mar 14/2016	YT116-YT120
			4	1	Dec 10/2015	YT126-YT131
				2	Dec 10/2015	YT126-YT131
STANDBY ATTITUDE REFERENCE SYSTEM						
INTEGRATED STANDBY FLIGHT DISPLAY SYSTEM	34-24-15		1		Jun 21/2016	ALL
INSTRUMENT LANDING SYSTEM (ILS)						
MMR - ILS NO. 1	34-31-11		1	1	Jun 21/2016	YT101-YT119 YT126-YT129
				2	Jun 21/2016	YT101-YT119 YT126-YT129
			2	1	Jun 21/2016	YT120 YT130-YT133
				2	Jun 21/2016	YT120 YT130-YT133
MMR - ILS NO. 2	34-31-21		1	1	Jun 21/2016	YT101-YT119 YT126-YT129
				2	Jun 21/2016	YT101-YT119 YT126-YT129
			2	1	Jun 21/2016	YT120 YT130-YT133
				2	Jun 21/2016	YT120 YT130-YT133
MARKER BEACON SYSTEM						
MARKER BEACON	34-32-11		1		Jun 21/2016	ALL
LOW RANGE RADIO ALTIMETER (LRRA) SYSTEM						
RADIO ALTIMETER SYSTEM -1	34-33-11		1		Jun 21/2016	ALL
RADIO ALTIMETER SYSTEM -2	34-33-21		1		Aug 15/2013	YT101-YT103
			2		Jun 21/2016	YT104-YT133

BOEING PROPRIETARY - Copyright © Unpublished Work - See title page for details

CHAPTER 34
NAVIGATION

Title	CH-SC-SU	Schem	Page	Sheet	Date	Effectivity
HEAD-UP DISPLAY (HUD) SYSTEM						
HEADS UP DISPLAY POWER AND ANNUNCIATION	34-36-11		1	1	Jun 21/2016	ALL
				2	Jun 21/2016	ALL
HEADS UP DISPLAY DATA BUS, DISCRETE INTERFACES	34-36-12		1		Jun 21/2016	ALL
HEAD UP DISPLAY SYSTEM INTERCONNECTS	34-36-13		1		Jun 21/2016	ALL
HEAD UP DISPLAY ON-BOARD DATA LOADER INTERFACES	34-36-14		1		Jun 21/2016	ALL
WEATHER RADAR SYSTEM						
WEATHER RADAR	34-41-11		1	1	Nov 18/2013	YT101-YT102
				2	Nov 18/2013	YT101-YT102
				3	Nov 18/2013	YT101-YT102
			2	1	Nov 18/2013	YT103
				2	Nov 18/2013	YT103
				3	Nov 18/2013	YT103
			3	1	Jun 21/2016	YT104-YT133
				2	Jun 21/2016	YT104-YT133
				3	Jun 21/2016	YT104-YT133
TRAFFIC ALERT AND COLLISION AVOIDANCE SYSTEM (TCAS)						
TCAS POWER AND DISPLAY	34-45-11		1		Jun 21/2016	ALL
TCAS ANTENNA/INTERFACE	34-45-21		1	1	Jun 21/2016	ALL
				2	Jun 21/2016	ALL
GROUND PROXIMITY WARNING SYSTEM						
GROUND PROXIMITY WARNING	34-49-11		1	1	Oct 14/2014	YT101-YT103
				2	Aug 15/2013	YT101-YT103
				3	Aug 15/2013	YT101-YT103
				4	Aug 15/2013	YT101-YT103
				5	Aug 15/2013	YT101-YT103
			2	1	Oct 14/2014	YT104
				2	Nov 18/2013	YT104
				3	Nov 18/2013	YT104

BOEING PROPRIETARY - Copyright © Unpublished Work - See title page for details

CHAPTER 34
NAVIGATION

Title	CH-SC-SU	Schem	Page	Sheet	Date	Effectivity
GROUND PROXIMITY WARNING (cont.)	34-49-11			4	Nov 18/2013	YT104
				5	Nov 18/2013	YT104
			3	1	Jun 21/2016	YT105-YT133
				2	Jun 21/2016	YT105-YT133
				3	Jun 21/2016	YT105-YT133
				4	Jun 21/2016	YT105-YT133
				5	Jun 21/2016	YT105-YT133
VOR SYSTEM						
VOR NO. 1	34-51-11		1	1	Jun 21/2016	YT101-YT119 YT126-YT129
				2	Jun 21/2016	YT101-YT119 YT126-YT129
			2	1	Jun 21/2016	YT120 YT130-YT133
				2	Jun 21/2016	YT120 YT130-YT133
VOR NO. 2	34-51-21		1	1	Jun 21/2016	YT101-YT119 YT126-YT129
				2	Jun 21/2016	YT101-YT119 YT126-YT129
			2	1	Jun 21/2016	YT120 YT130-YT133
				2	Jun 21/2016	YT120 YT130-YT133
VOR/ILS INSTRUMENT TRANSFER SWITCHING	34-51-41		1	1	Jun 21/2016	ALL
				2	Jun 21/2016	ALL
				3	Jun 21/2016	ALL
ATC SYSTEM						
ATC TRANSPONDER 1	34-53-11		1	1	Aug 15/2013	YT101-YT103
				2	Jun 21/2016	YT101-YT103
			2	1	Jun 21/2016	YT104-YT105 YT126-YT133
				2	Jun 21/2016	YT104-YT105 YT126-YT133
			3	1	Mar 14/2016	YT106-YT120
				2	Jun 21/2016	YT106-YT120
ATC TRANSPONDER 2	34-53-21		1	1	Aug 15/2013	YT101-YT103
				2	Jun 21/2016	YT101-YT103

BOEING PROPRIETARY - Copyright © Unpublished Work - See title page for details

CHAPTER 34
NAVIGATION

Title	CH-SC-SU	Schem	Page	Sheet	Date	Effectivity
ATC TRANSPONDER 2 (cont.)	34-53-21		2	1	Jun 21/2016	YT104-YT133
				2	Jun 21/2016	YT104-YT133
ATC ANTENNA SELECT	34-53-31		1		Jun 21/2016	ALL
DISTANCE MEASURING SYSTEM (DME) SYSTEM						
DME NO. 1	34-55-11		1	1	Jun 21/2016	ALL
				2	Jun 21/2016	ALL
DME NO. 2	34-55-21		1	1	Jun 21/2016	ALL
				2	Jun 21/2016	ALL
AUTOMATIC DIRECTION FINDER (ADF) SYSTEM						
ADF-1	34-57-11		1		Aug 15/2013	YT101-YT103
			2	1	Jun 21/2016	YT104-YT133
				2	Jun 21/2016	YT104-YT133
ADF-2	34-57-21		1		Aug 15/2013	YT101-YT103
			2	1	Jun 21/2016	YT104-YT133
				2	Jun 21/2016	YT104-YT133
GLOBAL POSITIONING SYSTEM (GPS)						
GLOBAL POSITIONING SYSTEM SENSOR UNIT NO.1	34-58-11		1		Aug 15/2013	YT101-YT103
			2	1	Apr 17/2014	YT104-YT105
				2	Apr 17/2014	YT104-YT105
			3	1	Jun 21/2016	YT106-YT119
				2	Jun 21/2016	YT106-YT119
			4	1	May 15/2015	YT126-YT129
				2	May 15/2015	YT126-YT129
			5	1	Jun 21/2016	YT130-YT133
				2	Jun 21/2016	YT130-YT133
GLOBAL POSITIONING SYSTEM SENSOR UNIT NO.2	34-58-21		1		Aug 15/2013	YT101-YT103
			2	1	Mar 14/2016	YT104-YT120
				2	Mar 14/2016	YT104-YT120
			3	1	Jun 21/2016	YT126-YT133
				2	Jun 21/2016	YT126-YT133

BOEING PROPRIETARY - Copyright © Unpublished Work - See title page for details

CHAPTER 34
NAVIGATION

Title	CH-SC-SU	Schem	Page	Sheet	Date	Effectivity
FLIGHT MANAGEMENT COMPUTER SYSTEM (FMCS)						
FMCS POWER AND DISPLAY	34-61-11		1	1	May 15/2015	YT101-YT108 YT126-YT129
				2	May 15/2015	YT101-YT108 YT126-YT129
			2	1	Jun 21/2016	YT109-YT110 YT130-YT133
				2	Jun 21/2016	YT109-YT110 YT130-YT133
			3	1	Mar 14/2016	YT111-YT120
				2	Mar 14/2016	YT111-YT120
FMCS SWITCHING AND INTER-SYSTEM BUS	34-61-12		1		Jun 21/2016	ALL
FMCS ARINC 429 INPUTS	34-61-13		1		Jun 21/2016	ALL
FMCS GENERAL OUTPUT BUSES FMC-01 AND FMC-02	34-61-14		1	1	Aug 15/2013	YT101-YT103
				2	Aug 15/2013	YT101-YT103
				3	Aug 15/2013	YT101-YT103
				4	Feb 14/2014	YT101-YT103
			2	1	Nov 18/2013	YT104
				2	Nov 18/2013	YT104
				3	Nov 18/2013	YT104
				4	Nov 18/2013	YT104
			3	1	Apr 17/2014	YT105
				2	Apr 17/2014	YT105
				3	Apr 17/2014	YT105
				4	Apr 17/2014	YT105
			4	1	Oct 14/2014	YT106-YT109
				2	Oct 14/2014	YT106-YT109
				3	Oct 14/2014	YT106-YT109
				4	Oct 14/2014	YT106-YT109
			5	1	May 15/2015	YT110
				2	May 15/2015	YT110
				3	May 15/2015	YT110
				4	May 15/2015	YT110

BOEING PROPRIETARY - Copyright © Unpublished Work - See title page for details

CHAPTER 34
NAVIGATION

Title	CH-SC-SU	Schem	Page	Sheet	Date	Effectivity
FMCS GENERAL OUTPUT BUSES FMC-01 AND FMC-02 (cont.)	34-61-14		6	1	Mar 14/2016	YT111-YT120
				2	Mar 14/2016	YT111-YT120
				3	Mar 14/2016	YT111-YT120
				4	Mar 14/2016	YT111-YT120
			7	1	May 15/2015	YT126-YT129
				2	May 15/2015	YT126-YT129
				3	May 15/2015	YT126-YT129
			8	1	Jun 21/2016	YT130-YT133
				2	Jun 21/2016	YT130-YT133
				3	Jun 21/2016	YT130-YT133
FMCS OUTPUT BUSSES FMC-08 AND FMC-09	34-61-15		1	1	Aug 15/2013	YT101-YT103
				2	Aug 15/2013	YT101-YT103
			2	1	Feb 14/2014	YT104
				2	Feb 14/2014	YT104
				3	Feb 14/2014	YT104
			3	1	Apr 17/2014	YT105
				2	Apr 17/2014	YT105
				3	Apr 17/2014	YT105
			4	1	Jan 12/2015	YT106
				2	Jan 12/2015	YT106
				3	Jan 12/2015	YT106
			5	1	Jan 12/2015	YT107-YT110
				2	Jan 12/2015	YT107-YT110
				3	Jan 12/2015	YT107-YT110
			6	1	Mar 14/2016	YT111-YT120
				2	Mar 14/2016	YT111-YT120
				3	Mar 14/2016	YT111-YT120
			7	1	Jun 21/2016	YT126-YT133
				2	Jun 21/2016	YT126-YT133
				3	Jun 21/2016	YT126-YT133
FMCS MESSAGE AND FAIL STATUS	34-61-16		1		Jun 21/2016	ALL

BOEING PROPRIETARY - Copyright © Unpublished Work - See title page for details

CHAPTER 34
NAVIGATION

Title	CH-SC-SU	Schem	Page	Sheet	Date	Effectivity
FMCS ANALOG DISCRETES	34-61-17		1		Jun 21/2016	ALL
FMCS/DATA LOADER INTERFACE	34-61-18		1		Jun 21/2016	ALL
FMCS PROGRAM PINS	34-61-19		1	1	Jun 21/2016	YT101-YT127 YT131-YT133
				2	Jun 21/2016	YT101-YT127 YT131-YT133
			2	1	Jun 21/2016	YT128-YT130
				2	Jun 21/2016	YT128-YT130
FMCS/MCDU INTERFACE WITH ACARS	34-61-21		1		Jun 29/2015	YT101-YT110
			2		Mar 14/2016	YT111-YT120
			3		Jun 21/2016	YT126-YT133
FMCS BITE PRINTER AND PORTABLE CDU RECEPTACLES	34-61-22		1		Aug 15/2013	YT101
			2		Jun 21/2016	YT102-YT133
CDU/MCDU INTERFACE	34-61-23		1		Aug 15/2013	YT101-YT103
			2		Jun 21/2016	YT104-YT133
FMCS INTERFACE WITH ARINC 740/744 PRINTER	34-61-24		1		Jun 21/2016	ALL
CDU/MCDU/DATA LOADER INTERFACE	34-61-26		1		Jun 21/2016	ALL

BOEING PROPRIETARY - Copyright © Unpublished Work - See title page for details

CHAPTER 34
NAVIGATION

CH-SC-SU	Title
34-57-11	ADF-1
34-57-21	ADF-2
34-21-16	ADIRS - NO COOLING AND "ON DC" OPERATION WARNING
34-21-14	AIR DATA INERTIAL REFERENCE SYSTEM (ADIRS) - LEFT ADR OUTPUTS
34-21-11	AIR DATA INERTIAL REFERENCE SYSTEM (ADIRS) - LEFT CONTROL & WARNING
34-21-13	AIR DATA INERTIAL REFERENCE SYSTEM (ADIRS) - LEFT IR OUTPUTS
34-21-12	AIR DATA INERTIAL REFERENCE SYSTEM (ADIRS) - LEFT SYSTEM INPUTS
34-21-24	AIR DATA INERTIAL REFERENCE SYSTEM (ADIRS) - RIGHT ADR OUTPUTS
34-21-21	AIR DATA INERTIAL REFERENCE SYSTEM (ADIRS) - RIGHT CONTROL & WARNING
34-21-23	AIR DATA INERTIAL REFERENCE SYSTEM (ADIRS) - RIGHT IR OUTPUTS
34-21-22	AIR DATA INERTIAL REFERENCE SYSTEM (ADIRS) - RIGHT SYSTEM INPUTS
34-21-15	AIR DATA INERTIAL REFERENCE SYSTEM - IR SIGNAL SWITCHING
34-16-11	AIR DATA INERTIAL REFERENCE SYSTEM OVERSPEED TEST LEFT
34-16-21	AIR DATA INERTIAL REFERENCE SYSTEM OVERSPEED TEST RIGHT
34-53-31	ATC ANTENNA SELECT
34-53-11	ATC TRANSPONDER 1
34-53-21	ATC TRANSPONDER 2
34-61-23	CDU/MCDU INTERFACE
34-61-26	CDU/MCDU/DATA LOADER INTERFACE
34-55-11	DME NO. 1
34-55-21	DME NO. 2
34-61-17	FMCS ANALOG DISCRETES
34-61-13	FMCS ARINC 429 INPUTS
34-61-22	FMCS BITE PRINTER AND PORTABLE CDU RECEPTACLES
34-61-14	FMCS GENERAL OUTPUT BUSES FMC-01 AND FMC-02
34-61-24	FMCS INTERFACE WITH ARINC 740/744 PRINTER
34-61-16	FMCS MESSAGE AND FAIL STATUS
34-61-15	FMCS OUTPUT BUSSES FMC-08 AND FMC-09

BOEING PROPRIETARY - Copyright © Unpublished Work - See title page for details

CHAPTER 34
NAVIGATION

CH-SC-SU	Title
34-61-11	FMCS POWER AND DISPLAY
34-61-19	FMCS PROGRAM PINS
34-61-12	FMCS SWITCHING AND INTER-SYSTEM BUS
34-61-18	FMCS/DATA LOADER INTERFACE
34-61-21	FMCS/MCDU INTERFACE WITH ACARS
34-58-11	GLOBAL POSITIONING SYSTEM SENSOR UNIT NO.1
34-58-21	GLOBAL POSITIONING SYSTEM SENSOR UNIT NO.2
34-49-11	GROUND PROXIMITY WARNING
34-36-14	HEAD UP DISPLAY ON-BOARD DATA LOADER INTERFACES
34-36-13	HEAD UP DISPLAY SYSTEM INTERCONNECTS
34-36-12	HEADS UP DISPLAY DATA BUS, DISCRETE INTERFACES
34-36-11	HEADS UP DISPLAY POWER AND ANNUNCIATION
34-24-15	INTEGRATED STANDBY FLIGHT DISPLAY SYSTEM
34-32-11	MARKER BEACON
34-31-11	MMR - ILS NO. 1
34-31-21	MMR - ILS NO. 2
34-33-11	RADIO ALTIMETER SYSTEM -1
34-33-21	RADIO ALTIMETER SYSTEM -2
34-45-21	TCAS ANTENNA/INTERFACE
34-45-11	TCAS POWER AND DISPLAY
34-51-11	VOR NO. 1
34-51-21	VOR NO. 2
34-51-41	VOR/ILS INSTRUMENT TRANSFER SWITCHING
34-41-11	WEATHER RADAR

BOEING PROPRIETARY - Copyright © Unpublished Work - See title page for details

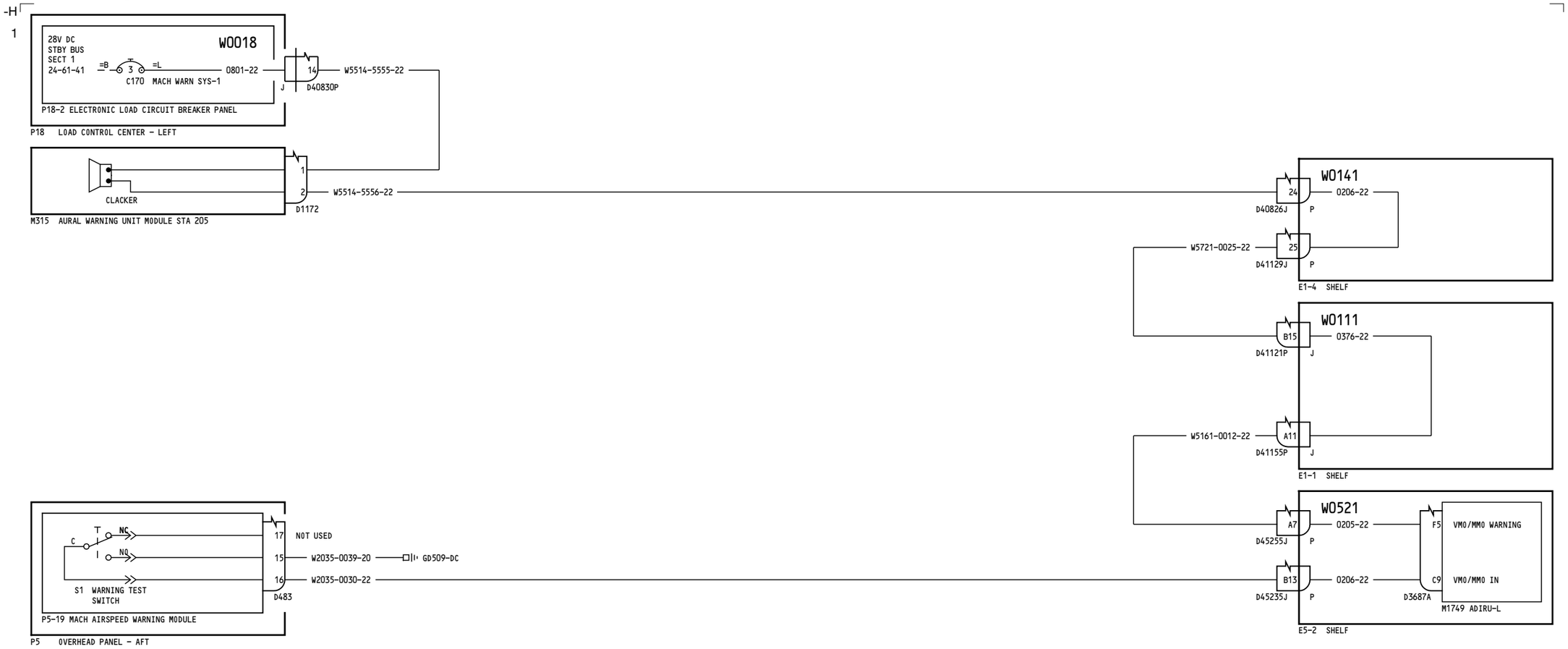

ALL	**AIR DATA INERTIAL REFERENCE SYSTEM OVERSPEED TEST LEFT** D280A351

BOEING PROPRIETARY - Copyright © - Unpublished Work - See title page for details.

34-16-11

Page 1

Jun 21/2016

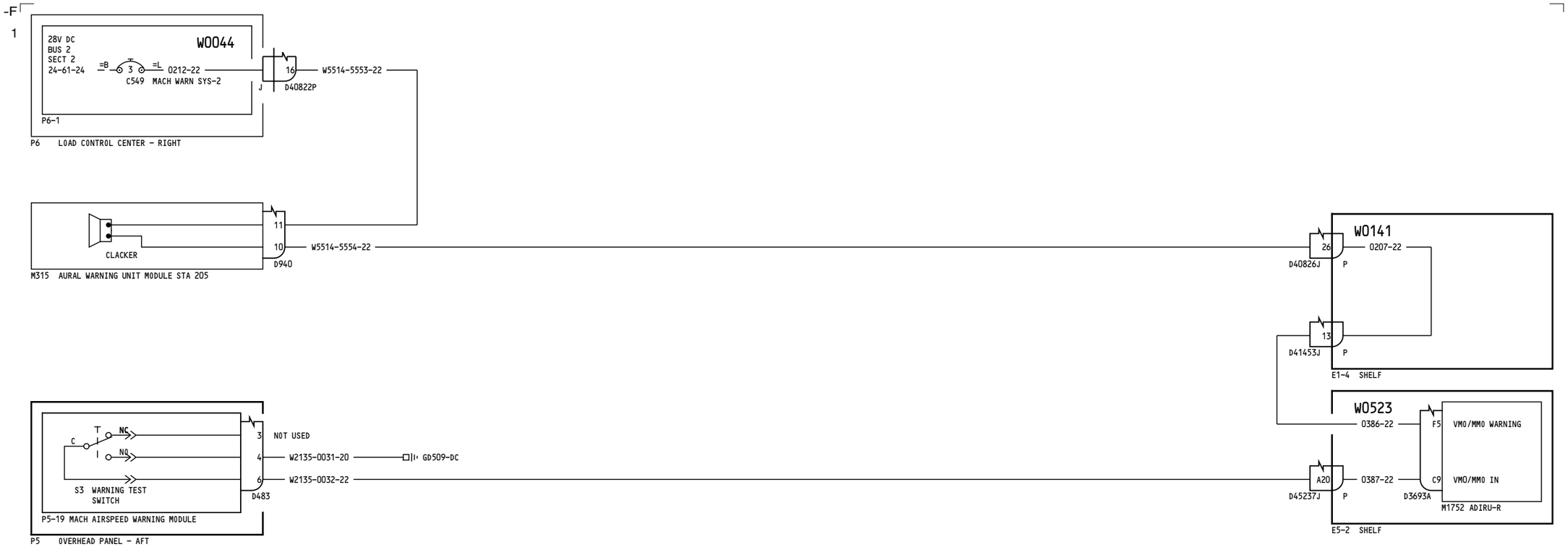

ALL

AIR DATA INERTIAL REFERENCE SYSTEM OVERSPEED TEST RIGHT

D280A351

BOEING PROPRIETARY - Copyright © - Unpublished Work - See title page for details.

34-16-21

Page 1

Jun 21/2016

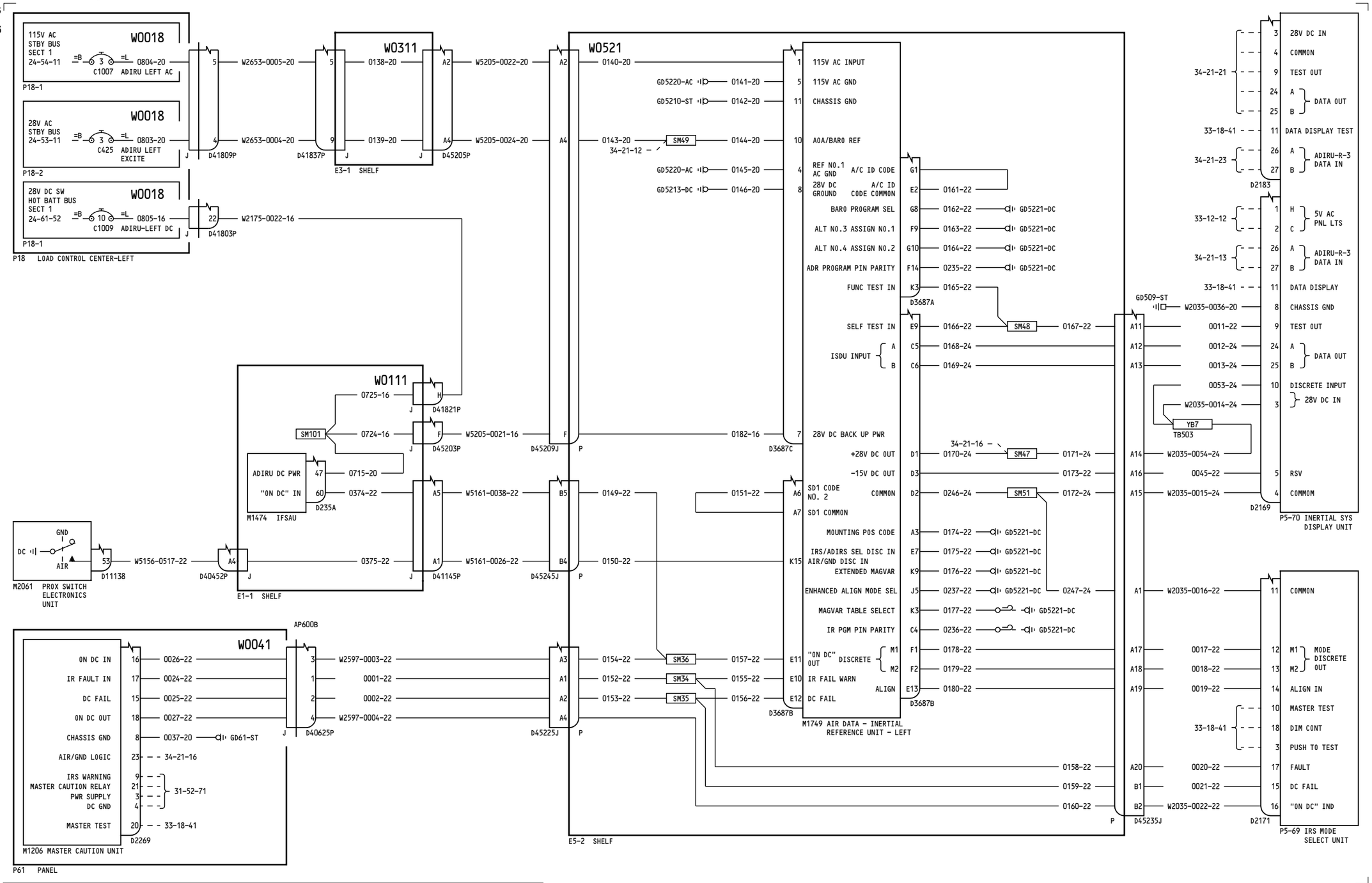

YT101-YT104

AIR DATA INERTIAL REFERENCE SYSTEM (ADIRS) - LEFT CONTROL & WARNING

D280A351

34-21-11

Page 1

Dec 10/2015

34-21-11

Page 1

Dec 10/2015

BOEING PROPRIETARY - Copyright © - Unpublished Work - See title page for details.

-B
112

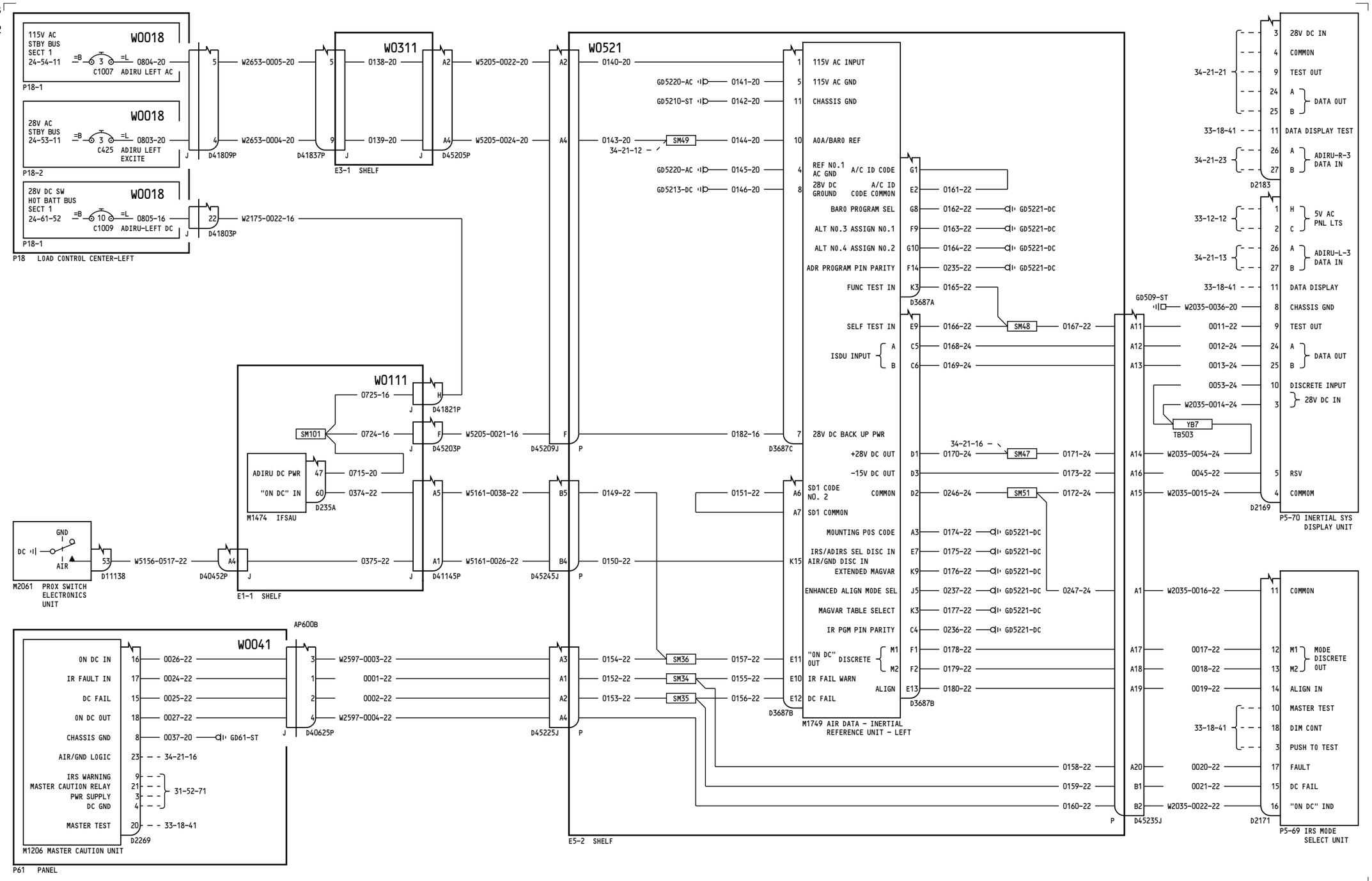

YT105-YT119, YT126-YT129

AIR DATA INERTIAL REFERENCE SYSTEM (ADIRS) - LEFT CONTROL & WARNING

D280A351

34-21-11
Page 2
Jun 21/2016

BOEING PROPRIETARY - Copyright © - Unpublished Work - See title page for details.

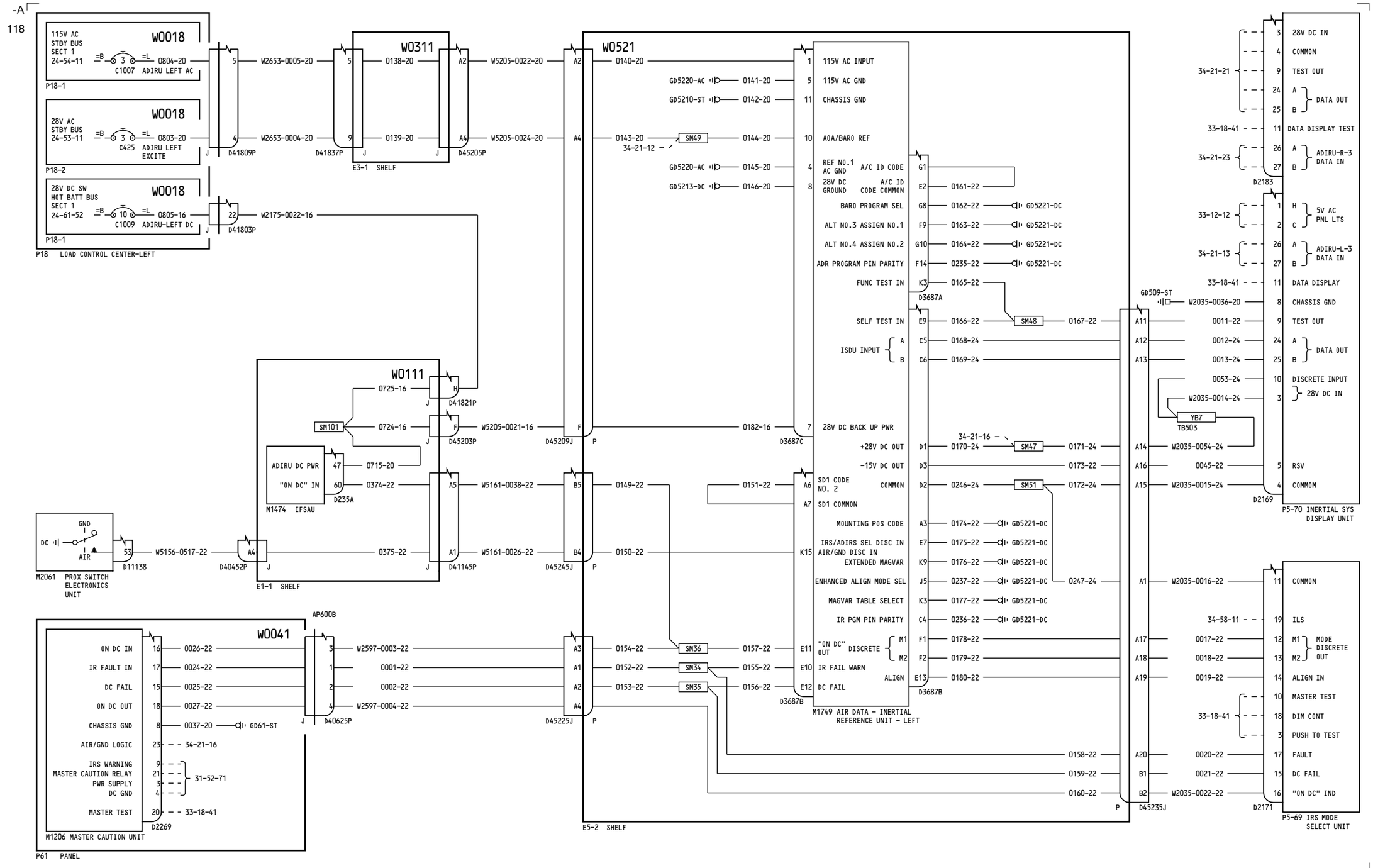

YT120, YT130-YT133

AIR DATA INERTIAL REFERENCE SYSTEM (ADIRS) - LEFT CONTROL & WARNING

D280A351

34-21-11
Page 3
Jun 21/2016

BOEING PROPRIETARY - Copyright © - Unpublished Work - See title page for details.

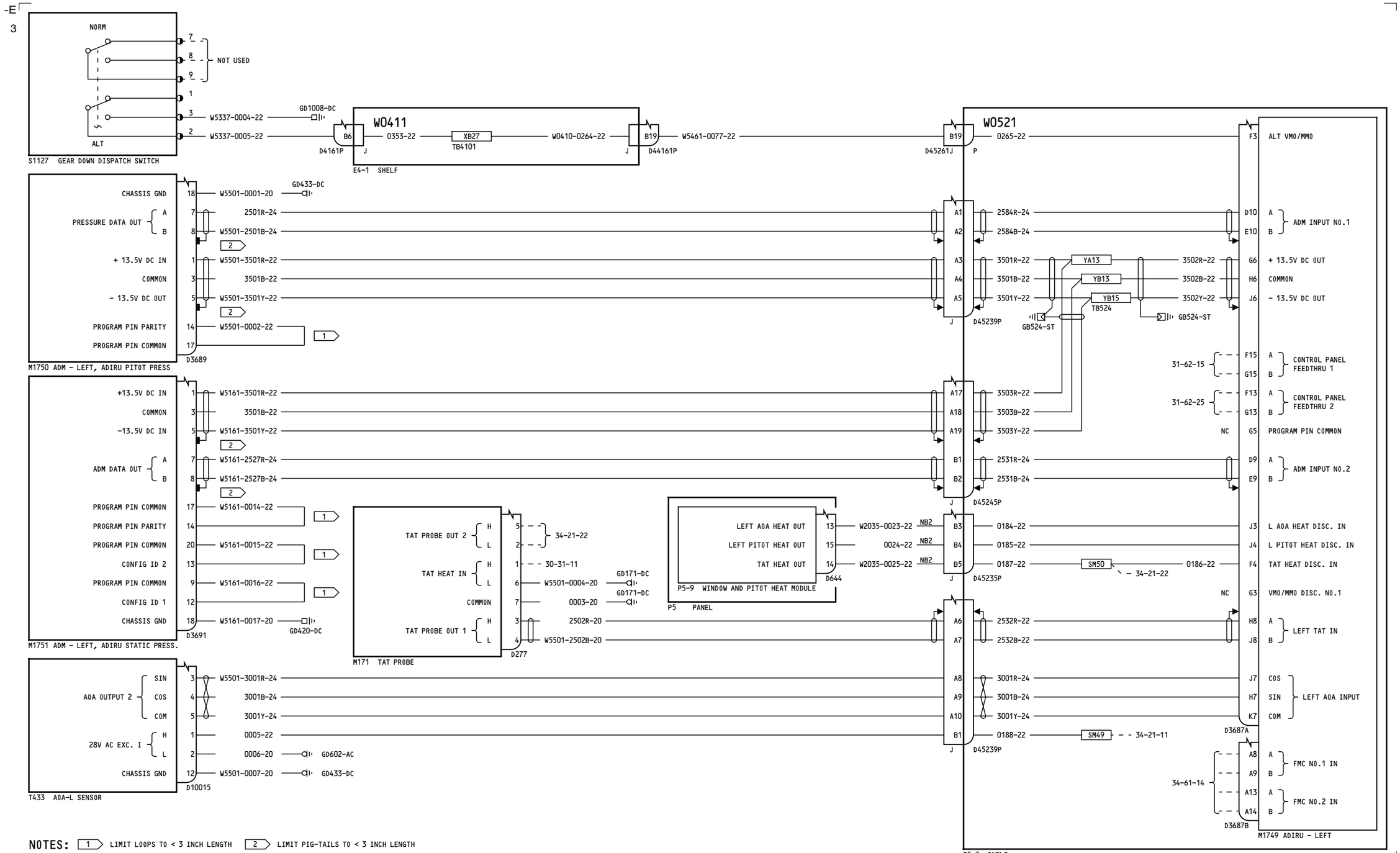

NOTES: 1 LIMIT LOOPS TO < 3 INCH LENGTH 2 LIMIT PIG-TAILS TO < 3 INCH LENGTH

ALL	**AIR DATA INERTIAL REFERENCE SYSTEM (ADIRS) - LEFT SYSTEM INPUTS**
	D280A351

34-21-12
Page 1
Jun 21/2016

BOEING PROPRIETARY - Copyright © - Unpublished Work - See title page for details.

596

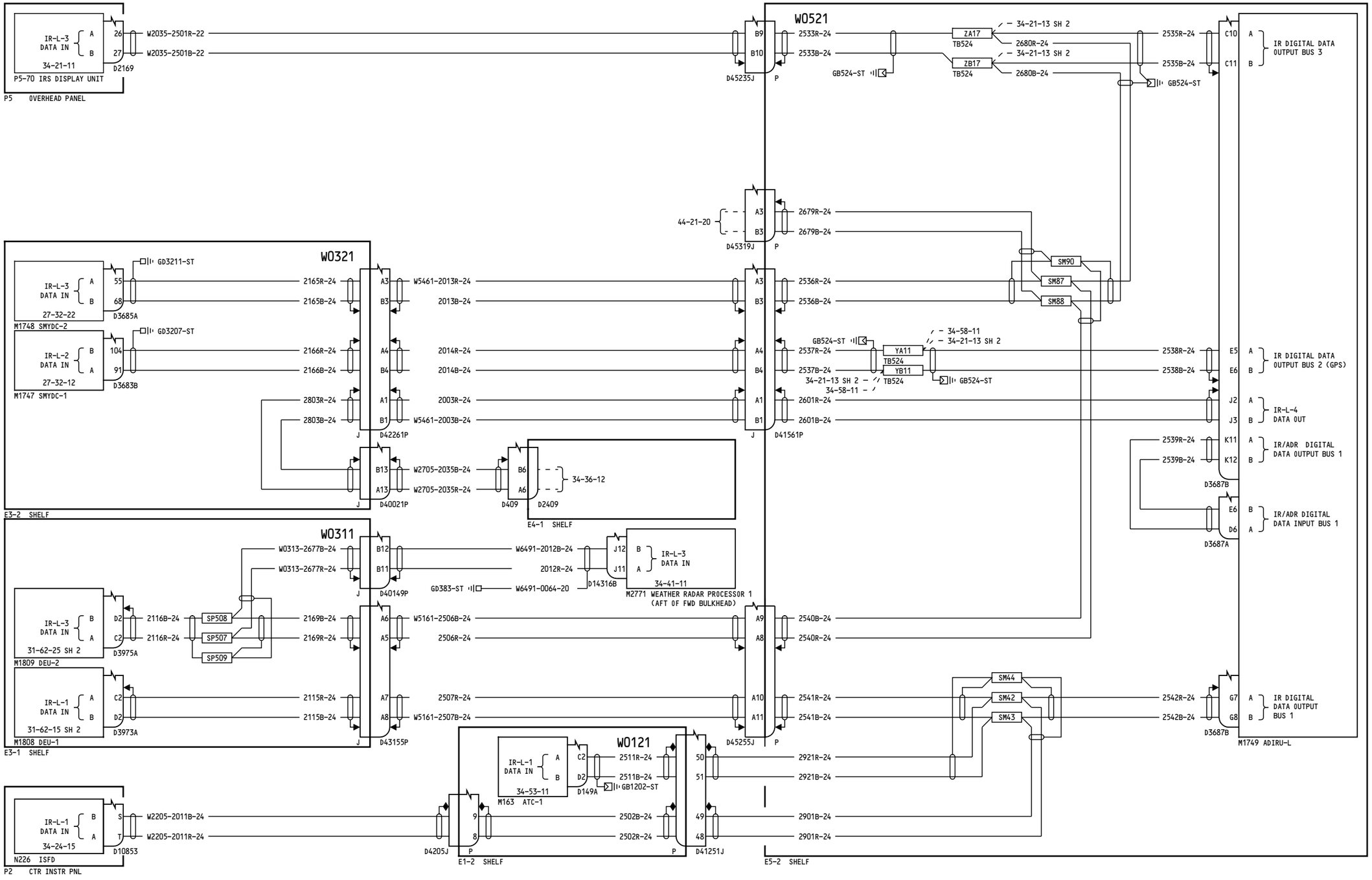

YT101-YT102

AIR DATA INERTIAL REFERENCE SYSTEM (ADIRS) - LEFT IR OUTPUTS

D280A351

34-21-13

Page 1
Sheet 1
Nov 18/2013

BOEING PROPRIETARY - Copyright © - Unpublished Work - See title page for details.

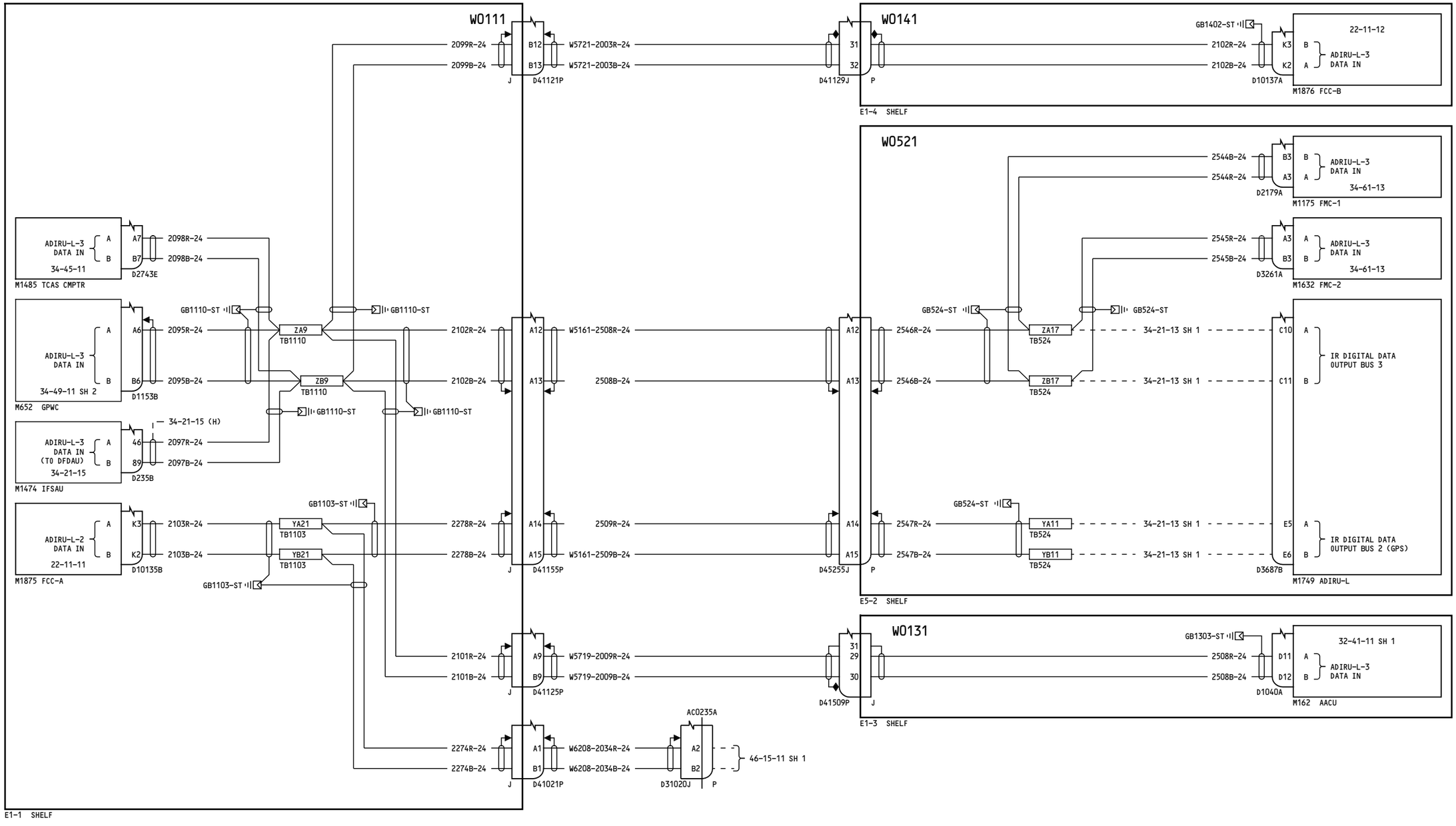

YT101-YT102

AIR DATA INERTIAL REFERENCE SYSTEM (ADIRS) - LEFT IR OUTPUTS

D280A351

34-21-13

Page 1
Sheet 2
Nov 18/2013

BOEING PROPRIETARY - Copyright © - Unpublished Work - See title page for details.

34-21-13

Page 1
Sheet 2
Nov 18/2013

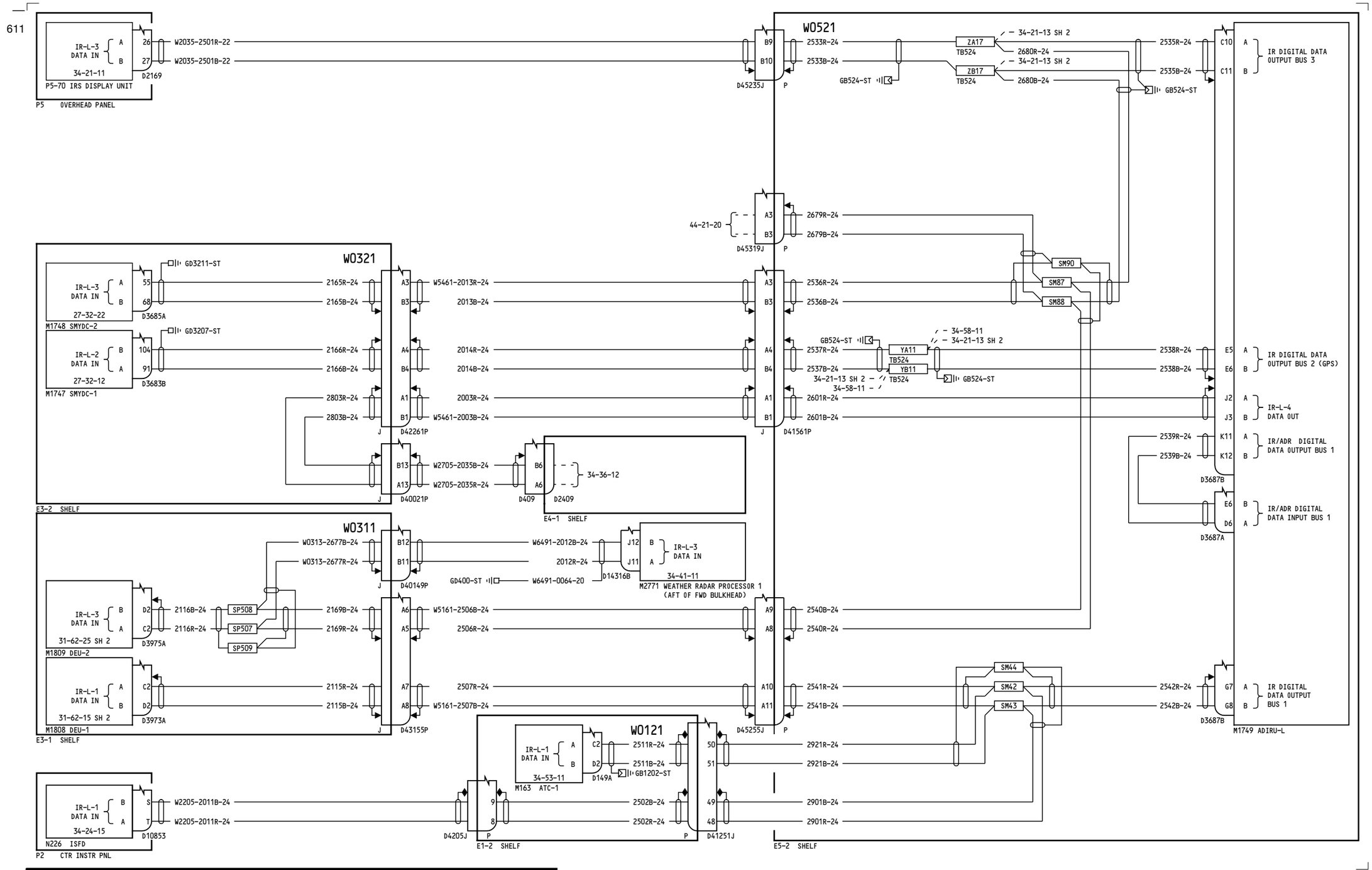

YT103

AIR DATA INERTIAL REFERENCE SYSTEM (ADIRS) - LEFT IR OUTPUTS

D280A351

34-21-13

Page 2
Sheet 1
Nov 18/2013

BOEING PROPRIETARY - Copyright © - Unpublished Work - See title page for details.

62

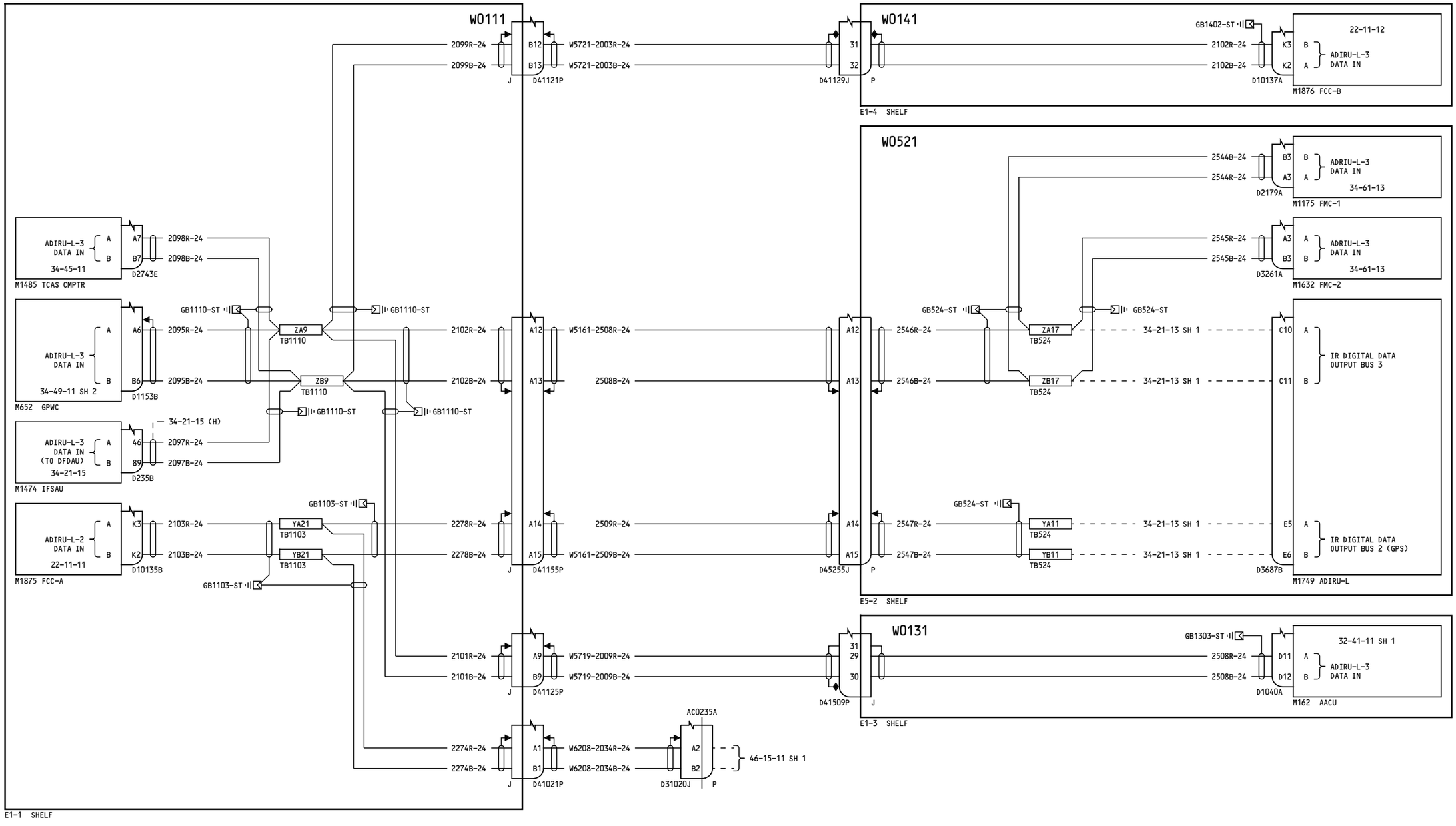

YT103

AIR DATA INERTIAL REFERENCE SYSTEM (ADIRS) - LEFT IR OUTPUTS

D280A351

34-21-13

Page 2
Sheet 2
Nov 18/2013

34-21-13

Page 2
Sheet 2
Nov 18/2013

BOEING PROPRIETARY - Copyright © - Unpublished Work - See title page for details.

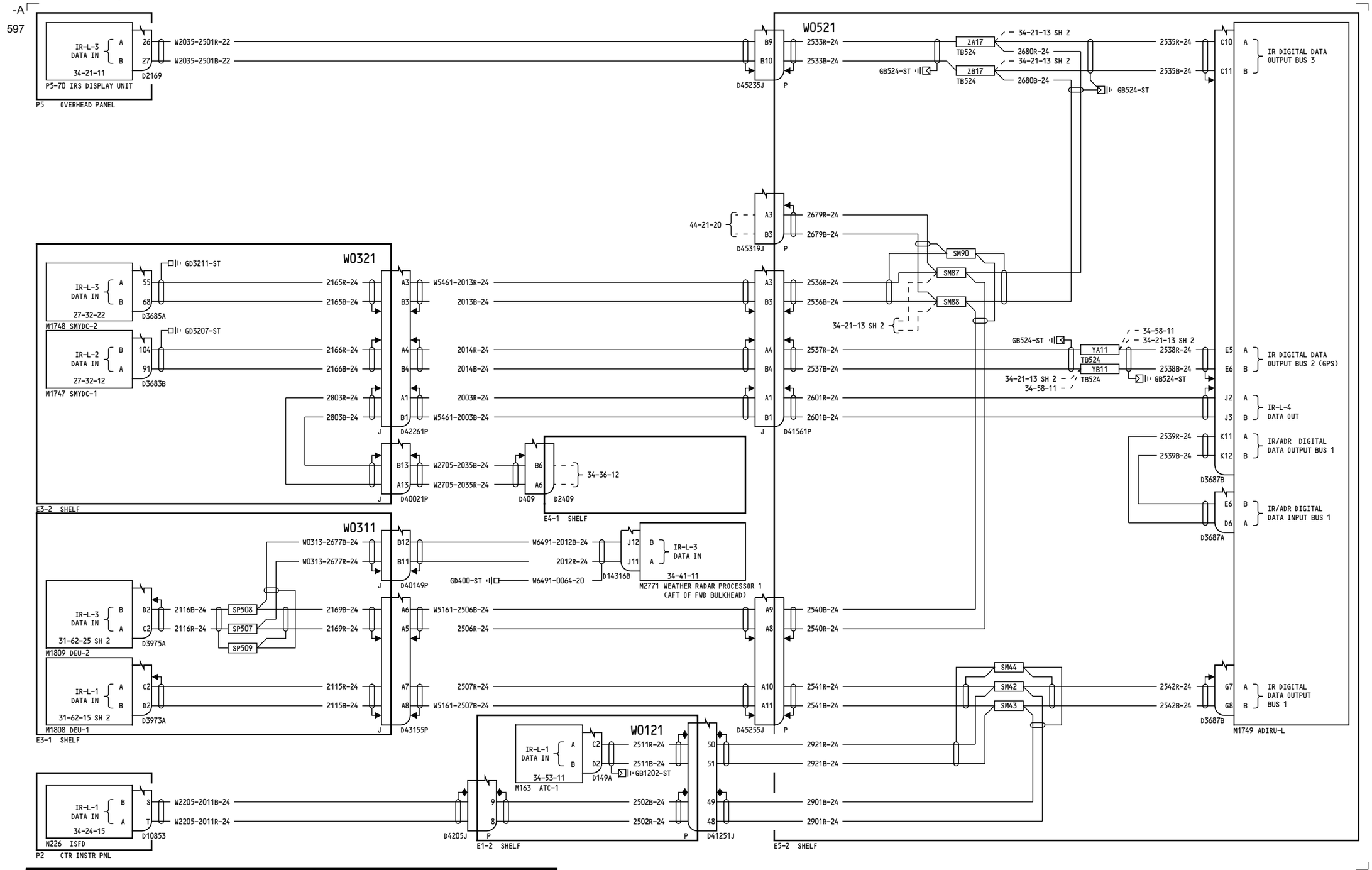

YT104-YT105

AIR DATA INERTIAL REFERENCE SYSTEM (ADIRS) - LEFT IR OUTPUTS

D280A351

34-21-13

Page 3
Sheet 1
Apr 17/2014

BOEING PROPRIETARY - Copyright © - Unpublished Work - See title page for details.

70

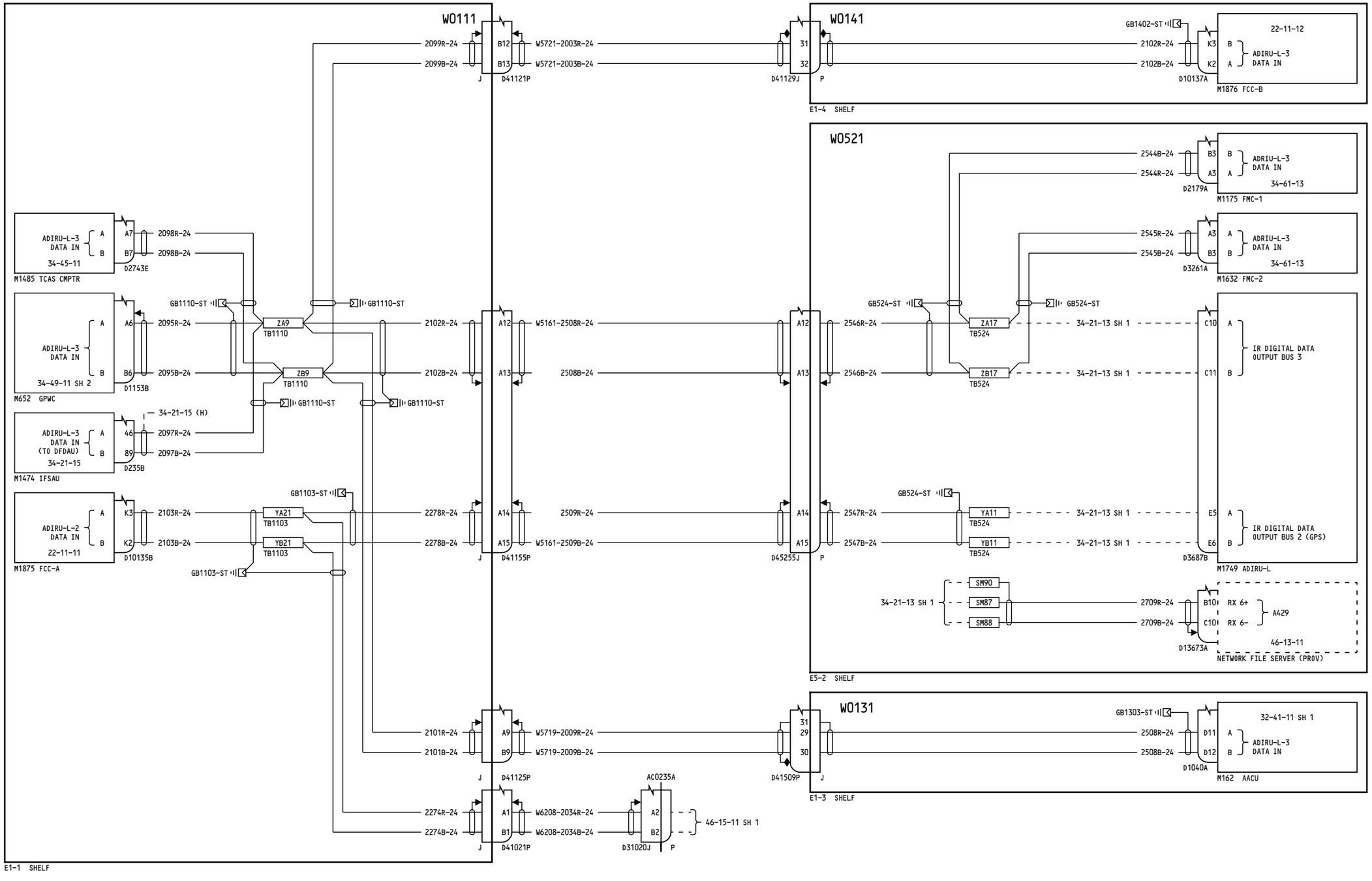

YT104-YT105

AIR DATA INERTIAL REFERENCE SYSTEM (ADIRS) - LEFT IR OUTPUTS

D280A351

BOEING PROPRIETARY - Copyright © - Unpublished Work - See title page for details.

34-21-13

Page 3
Sheet 2
Apr 17/2014

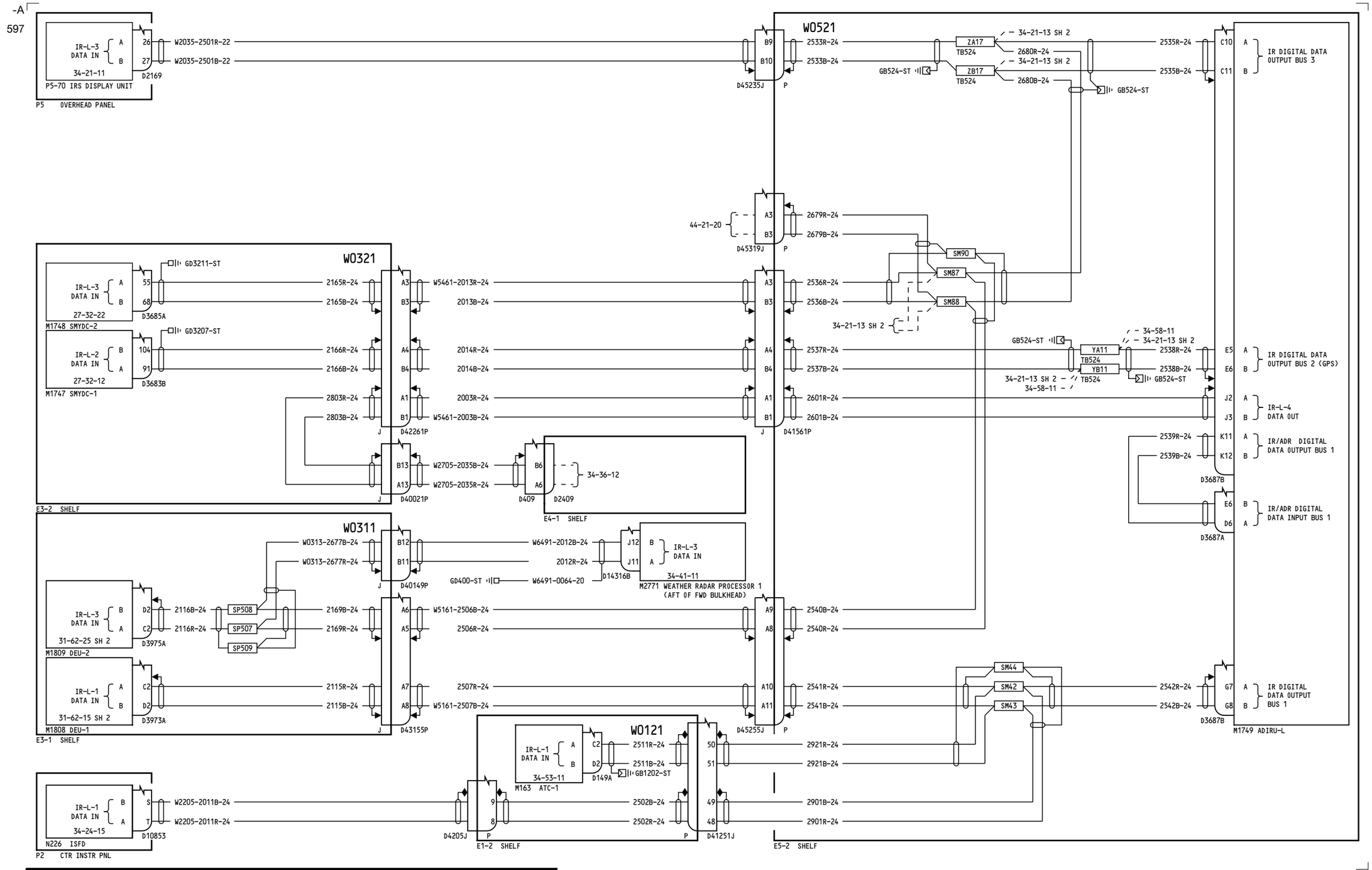

YT106-YT110

AIR DATA INERTIAL REFERENCE SYSTEM (ADIRS) - LEFT IR OUTPUTS

D280A351

34-21-13

Page 4
Sheet 1
Jan 12/2015

BOEING PROPRIETARY - Copyright © - Unpublished Work - See title page for details.

77

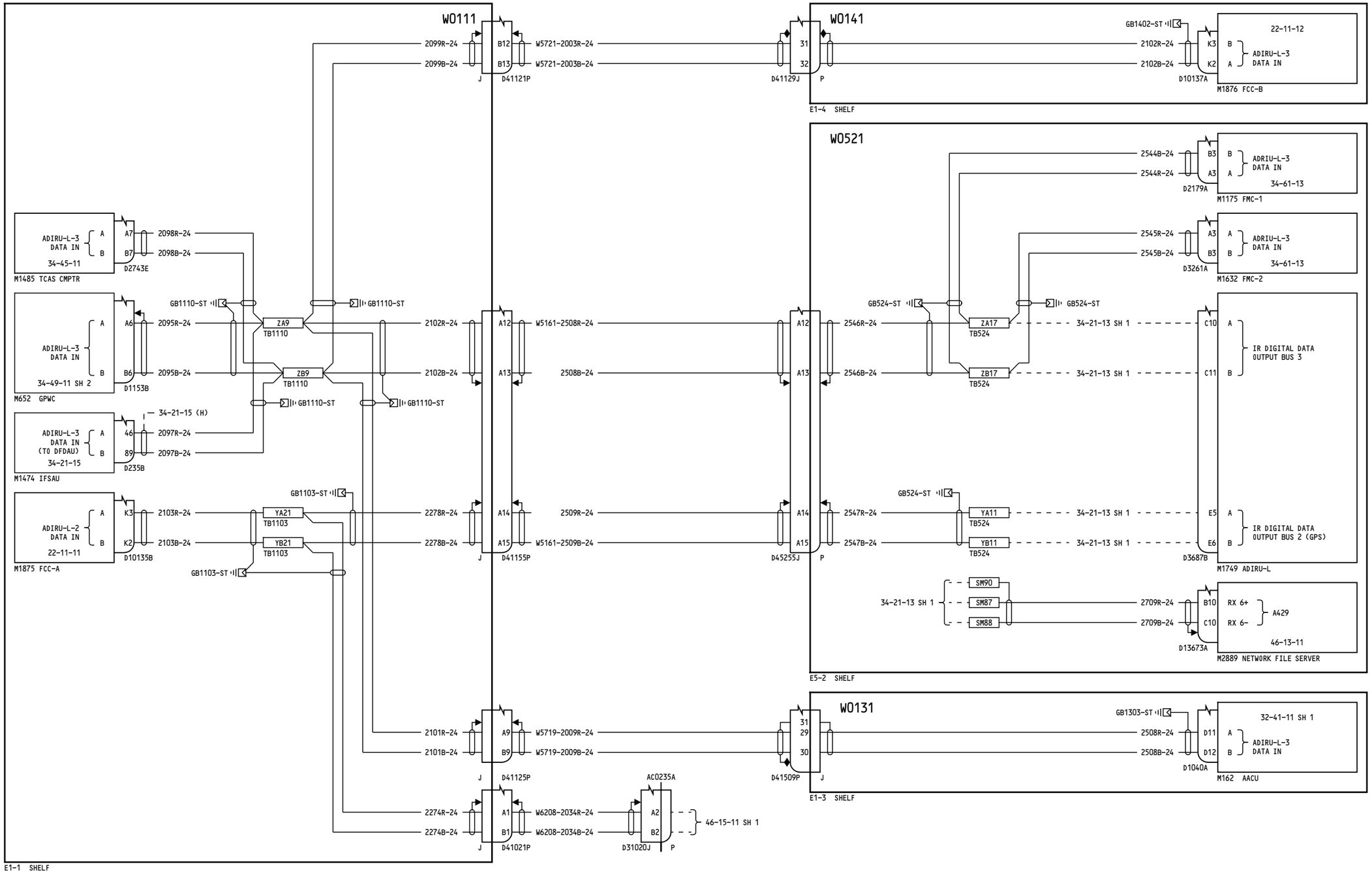

YT106-YT110

AIR DATA INERTIAL REFERENCE SYSTEM (ADIRS) - LEFT IR OUTPUTS

D280A351

34-21-13

Page 4
Sheet 2
Jan 12/2015

34-21-13

Page 4
Sheet 2
Jan 12/2015

BOEING PROPRIETARY - Copyright © - Unpublished Work - See title page for details.

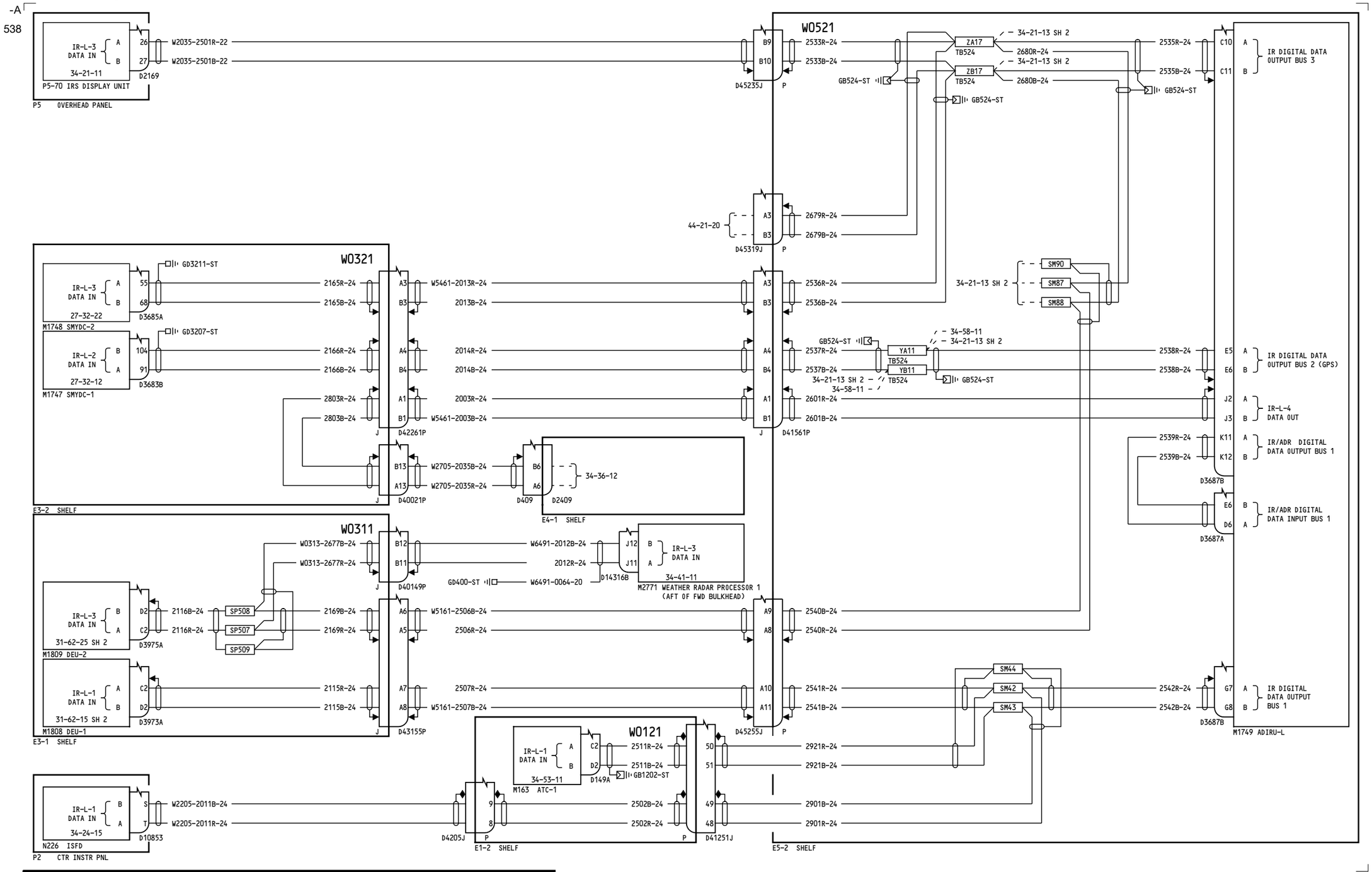

YT111-YT120

AIR DATA INERTIAL REFERENCE SYSTEM (ADIRS) - LEFT IR OUTPUTS

D280A351

34-21-13

Page 5
Sheet 1
Mar 14/2016

BOEING PROPRIETARY - Copyright © - Unpublished Work - See title page for details.

77

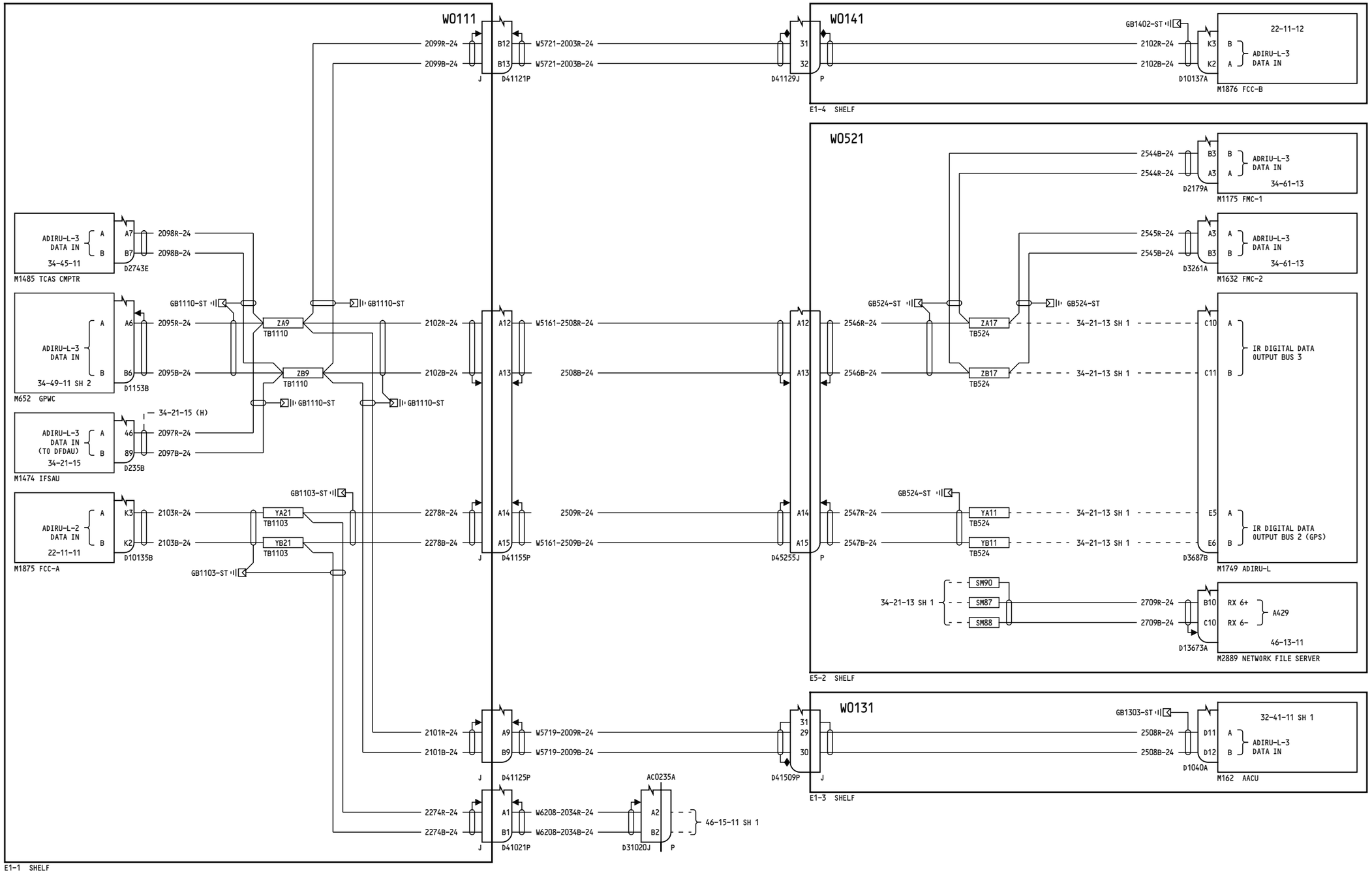

YT111-YT120

AIR DATA INERTIAL REFERENCE SYSTEM (ADIRS) - LEFT IR OUTPUTS

D280A351

34-21-13

Page 5
Sheet 2
Mar 14/2016

BOEING PROPRIETARY - Copyright © - Unpublished Work - See title page for details.

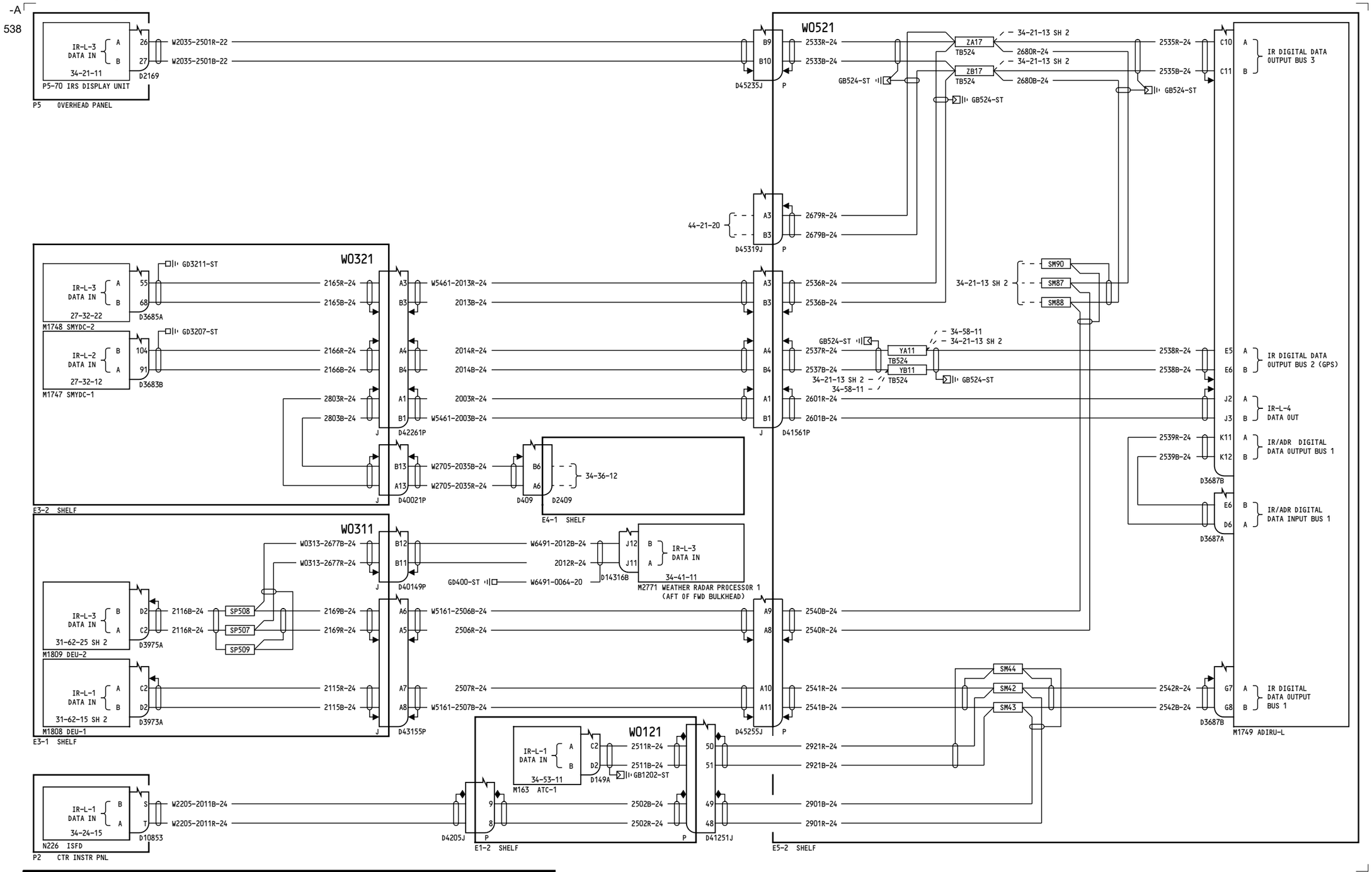

YT126-YT133

AIR DATA INERTIAL REFERENCE SYSTEM (ADIRS) - LEFT IR OUTPUTS

D280A351

34-21-13

Page 6
Sheet 1
Jun 21/2016

BOEING PROPRIETARY - Copyright © - Unpublished Work - See title page for details.

-A
66

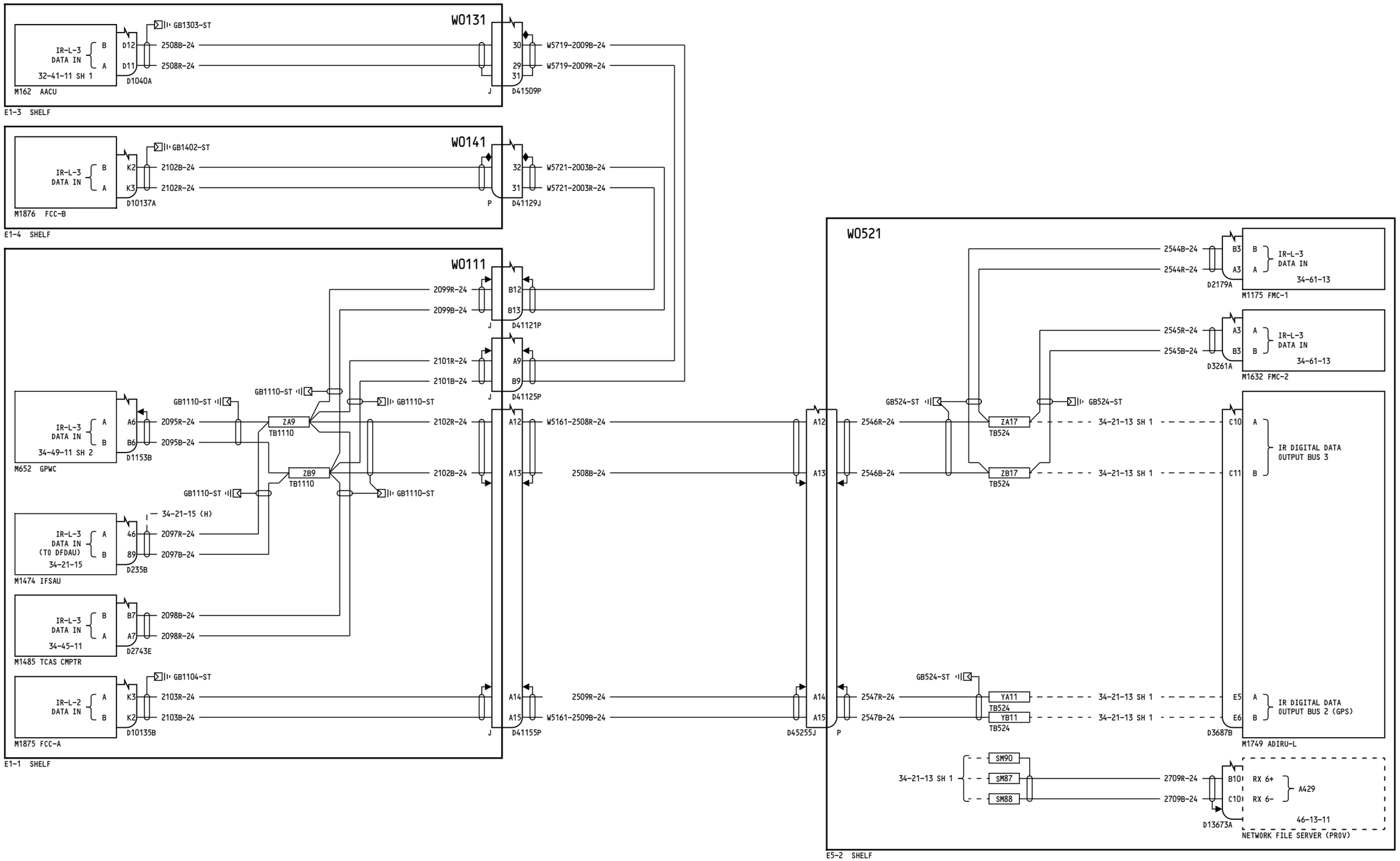

YT126-YT133	AIR DATA INERTIAL REFERENCE SYSTEM (ADIRS) - LEFT IR OUTPUTS D280A351	34-21-13	34-21-13
		Page 6 Sheet 2 Jun 21/2016	Page 6 Sheet 2 Jun 21/2016

BOEING PROPRIETARY - Copyright © - Unpublished Work - See title page for details.

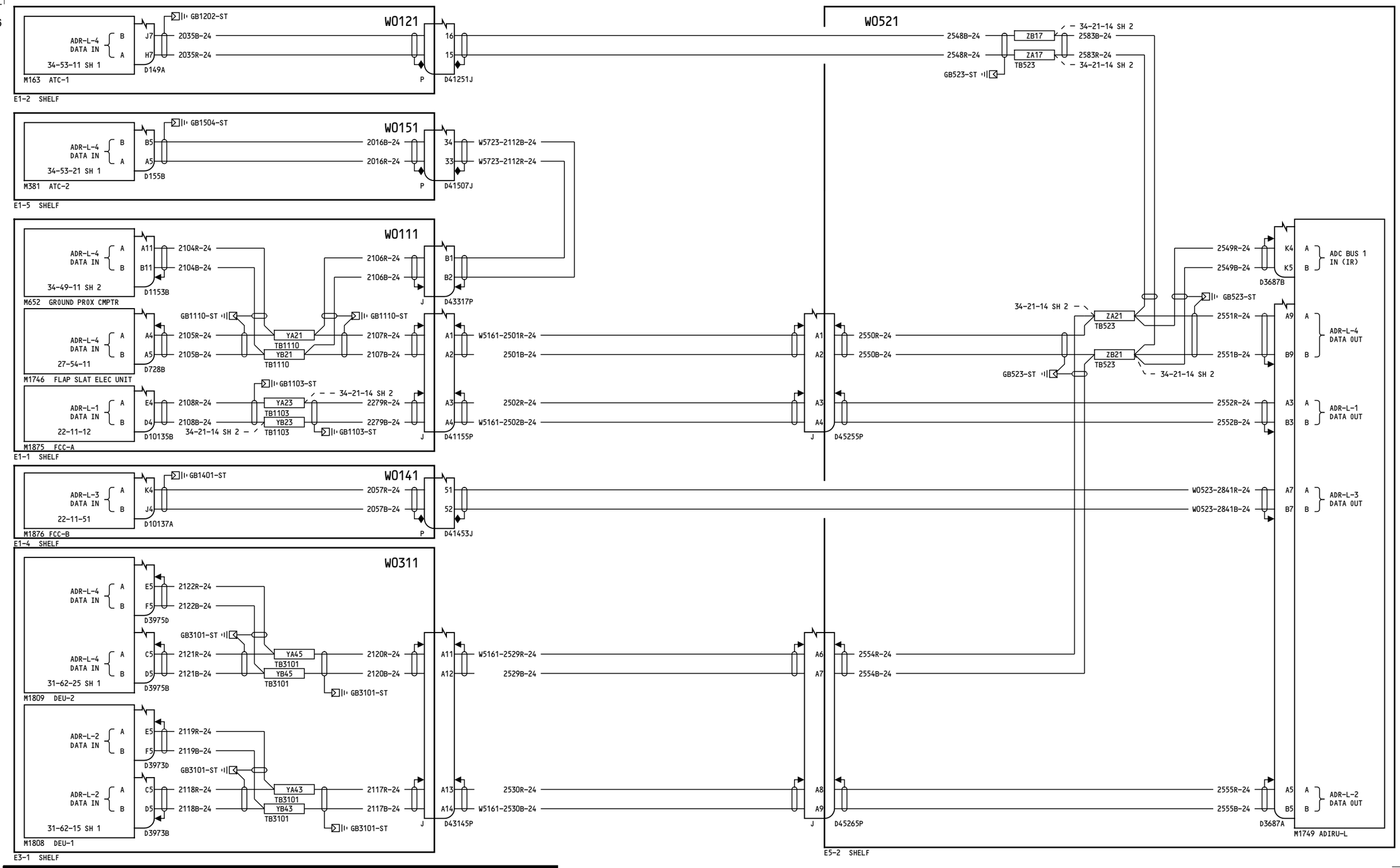

YT101-YT103

AIR DATA INERTIAL REFERENCE SYSTEM (ADIRS) - LEFT ADR OUTPUTS

D280A351

34-21-14

Page 1
Sheet 1
Aug 15/2013

BOEING PROPRIETARY - Copyright © - Unpublished Work - See title page for details.

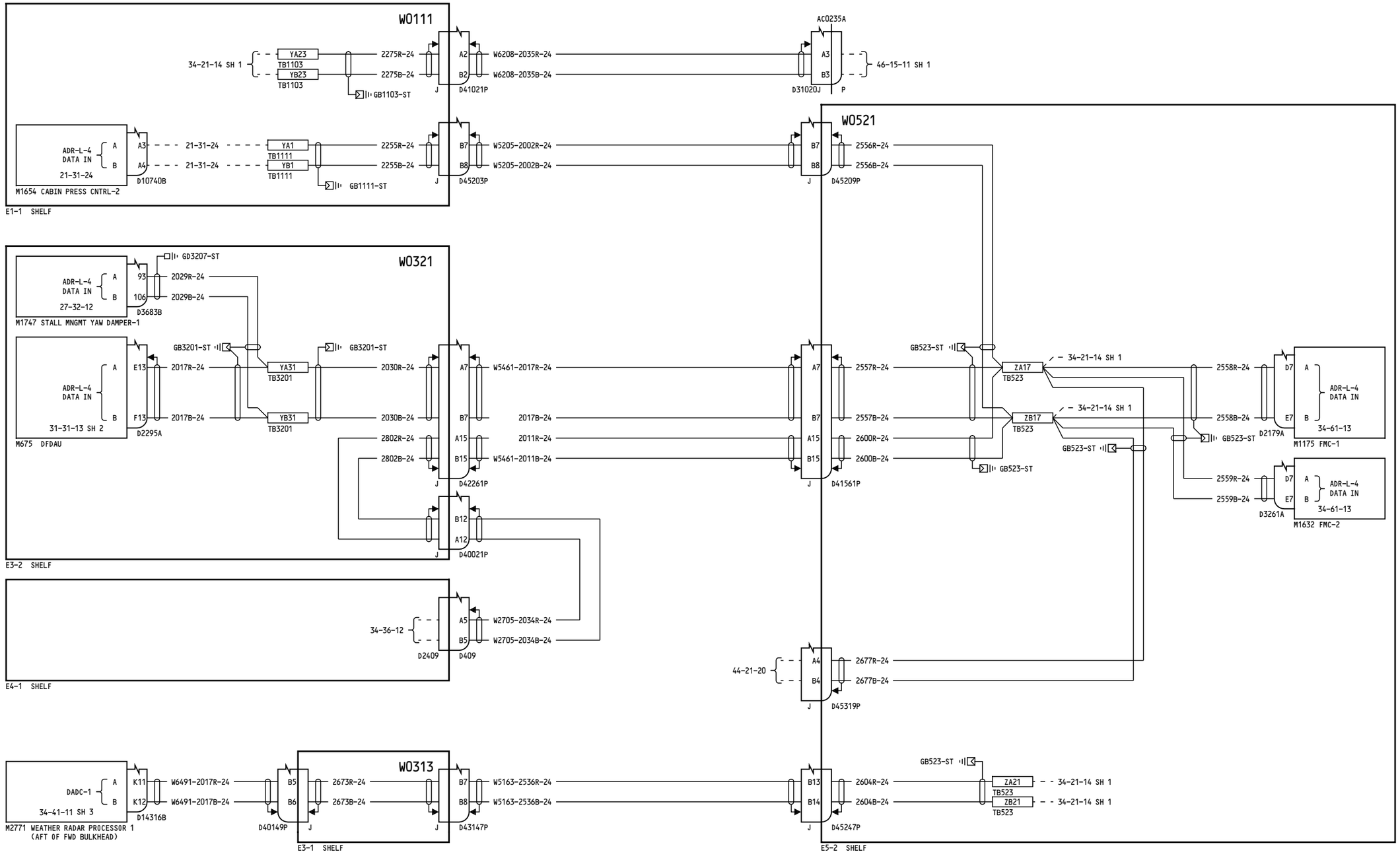

YT101-YT103

AIR DATA INERTIAL REFERENCE SYSTEM (ADIRS) - LEFT ADR OUTPUTS

D280A351

BOEING PROPRIETARY - Copyright © - Unpublished Work - See title page for details.

34-21-14

Page 1
Sheet 2
Aug 15/2013

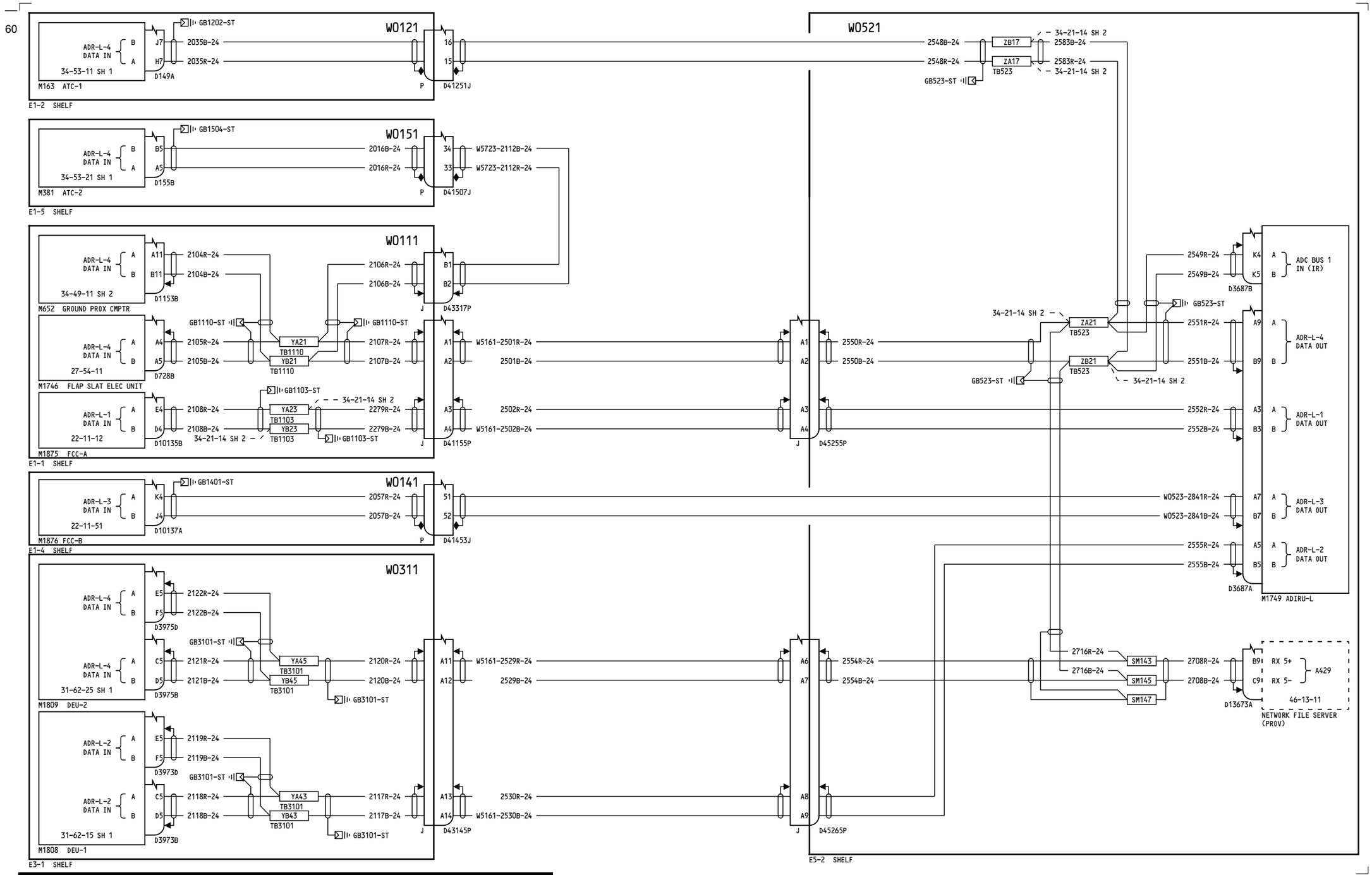

YT104-YT105

AIR DATA INERTIAL REFERENCE SYSTEM (ADIRS) - LEFT ADR OUTPUTS

D280A351

34-21-14

Page 2
Sheet 1
Apr 17/2014

BOEING PROPRIETARY - Copyright © - Unpublished Work - See title page for details.

261

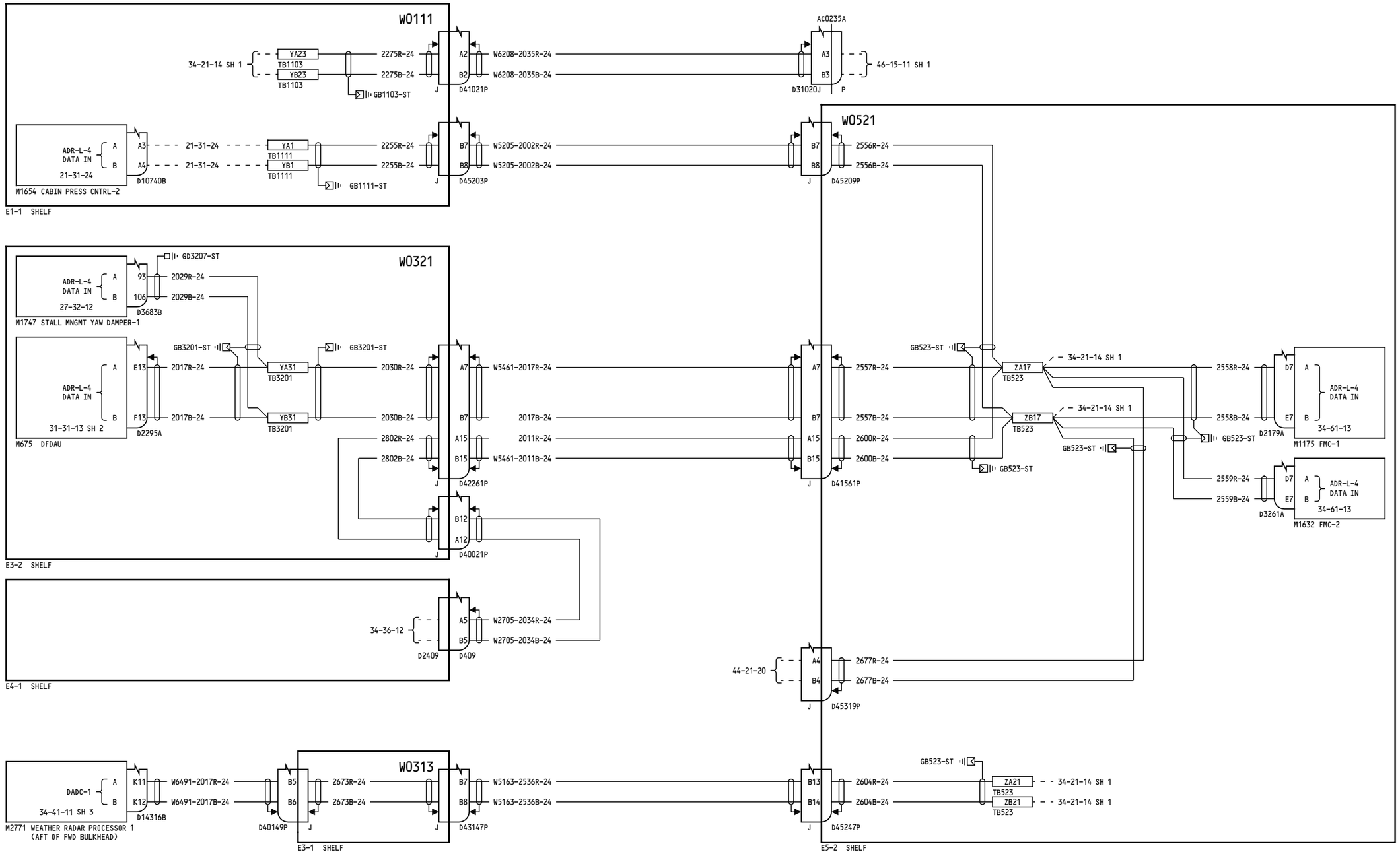

YT104-YT105

AIR DATA INERTIAL REFERENCE SYSTEM (ADIRS) - LEFT ADR OUTPUTS

D280A351

BOEING PROPRIETARY - Copyright © - Unpublished Work - See title page for details.

34-21-14

Page 2
Sheet 2
Apr 17/2014

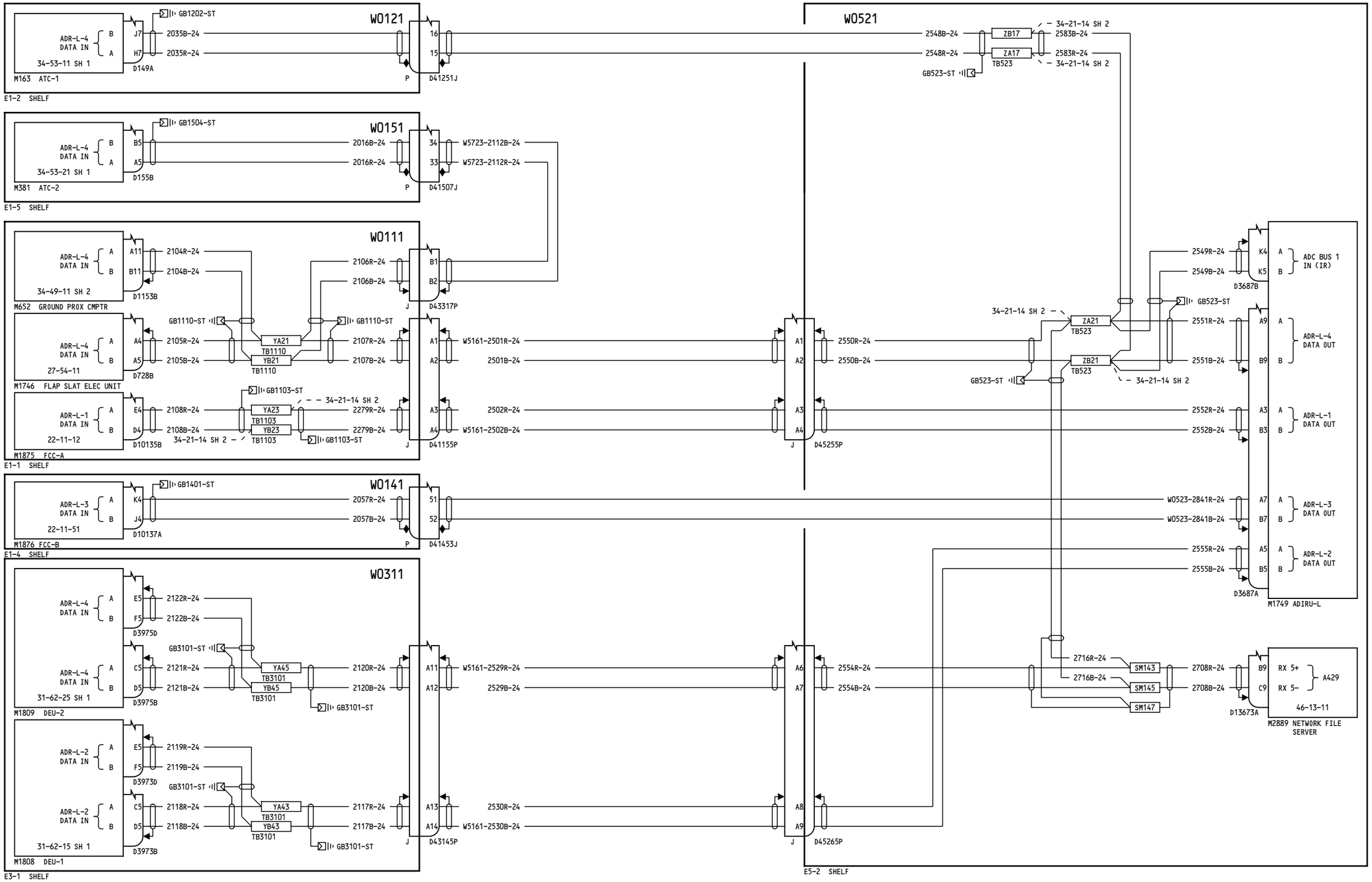

YT106-YT115

AIR DATA INERTIAL REFERENCE SYSTEM (ADIRS) - LEFT ADR OUTPUTS

D280A351

34-21-14

Page 3
Sheet 1
Aug 31/2015

BOEING PROPRIETARY - Copyright © - Unpublished Work - See title page for details.

261

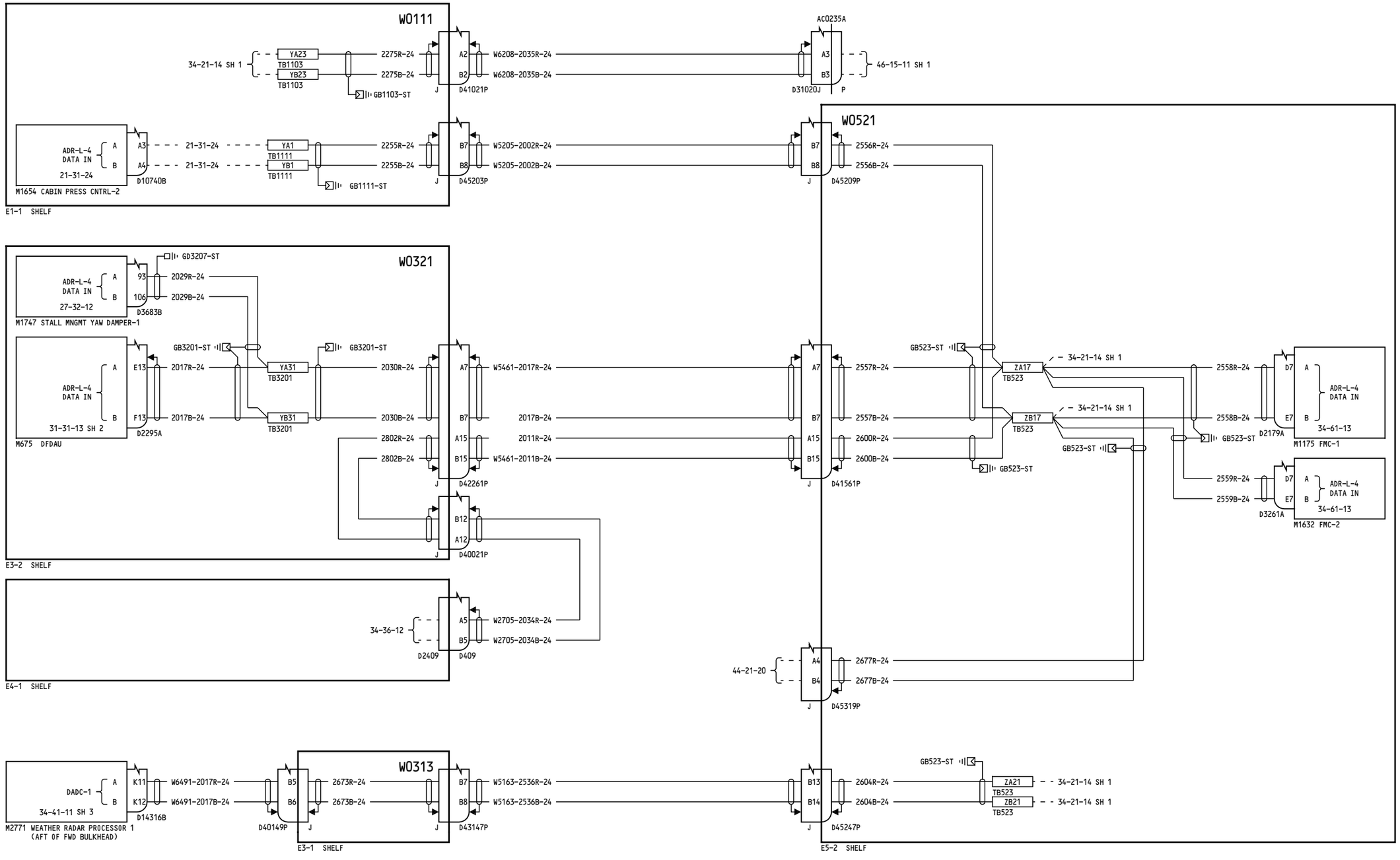

YT106-YT115

AIR DATA INERTIAL REFERENCE SYSTEM (ADIRS) - LEFT ADR OUTPUTS

D280A351

BOEING PROPRIETARY - Copyright © - Unpublished Work - See title page for details.

34-21-14

Page 3
Sheet 2
Aug 31/2015

77

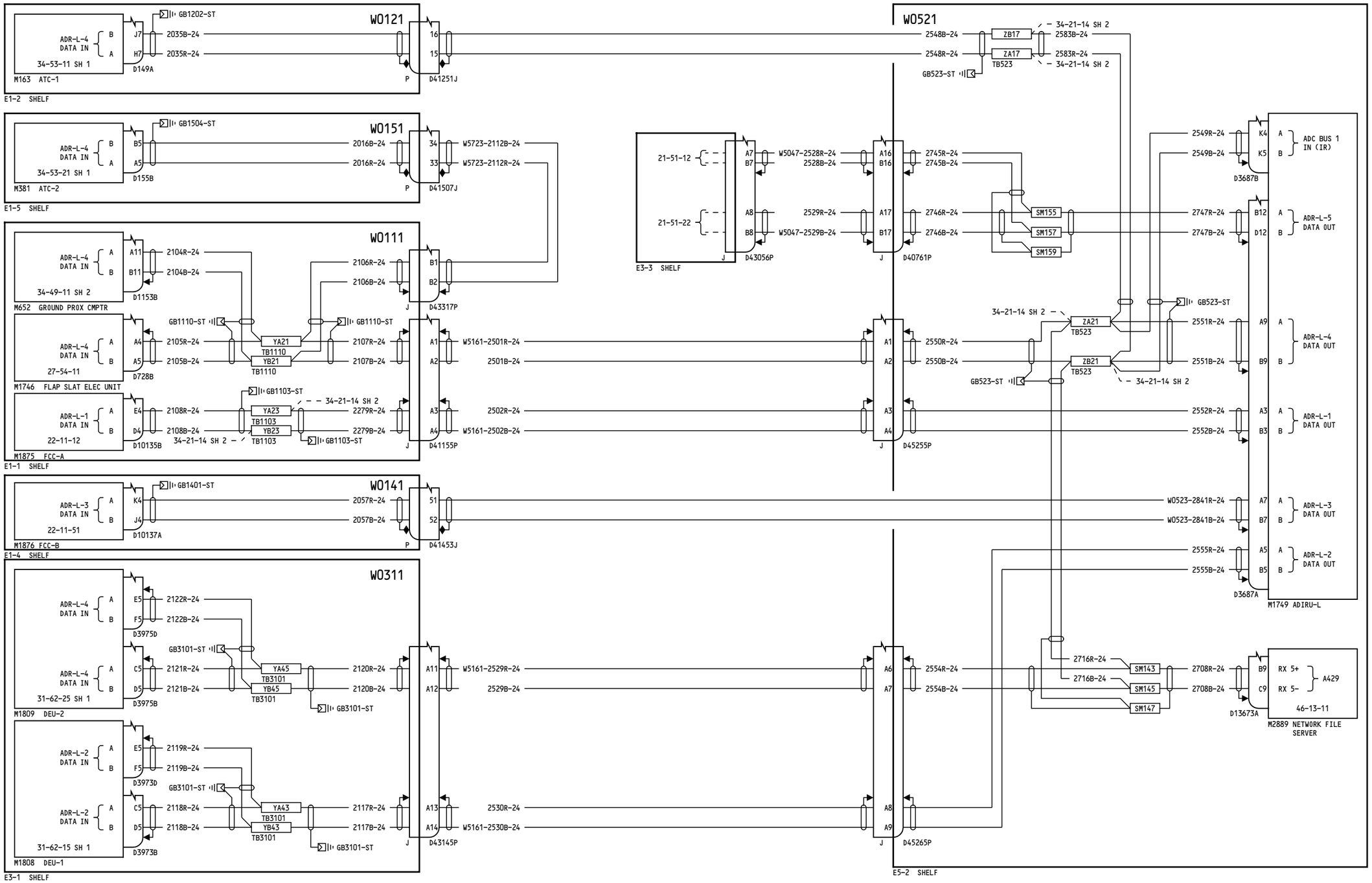

YT116-YT120

AIR DATA INERTIAL REFERENCE SYSTEM (ADIRS) - LEFT ADR OUTPUTS

D280A351

34-21-14

Page 4
Sheet 1
Mar 14/2016

BOEING PROPRIETARY - Copyright © - Unpublished Work - See title page for details.

261

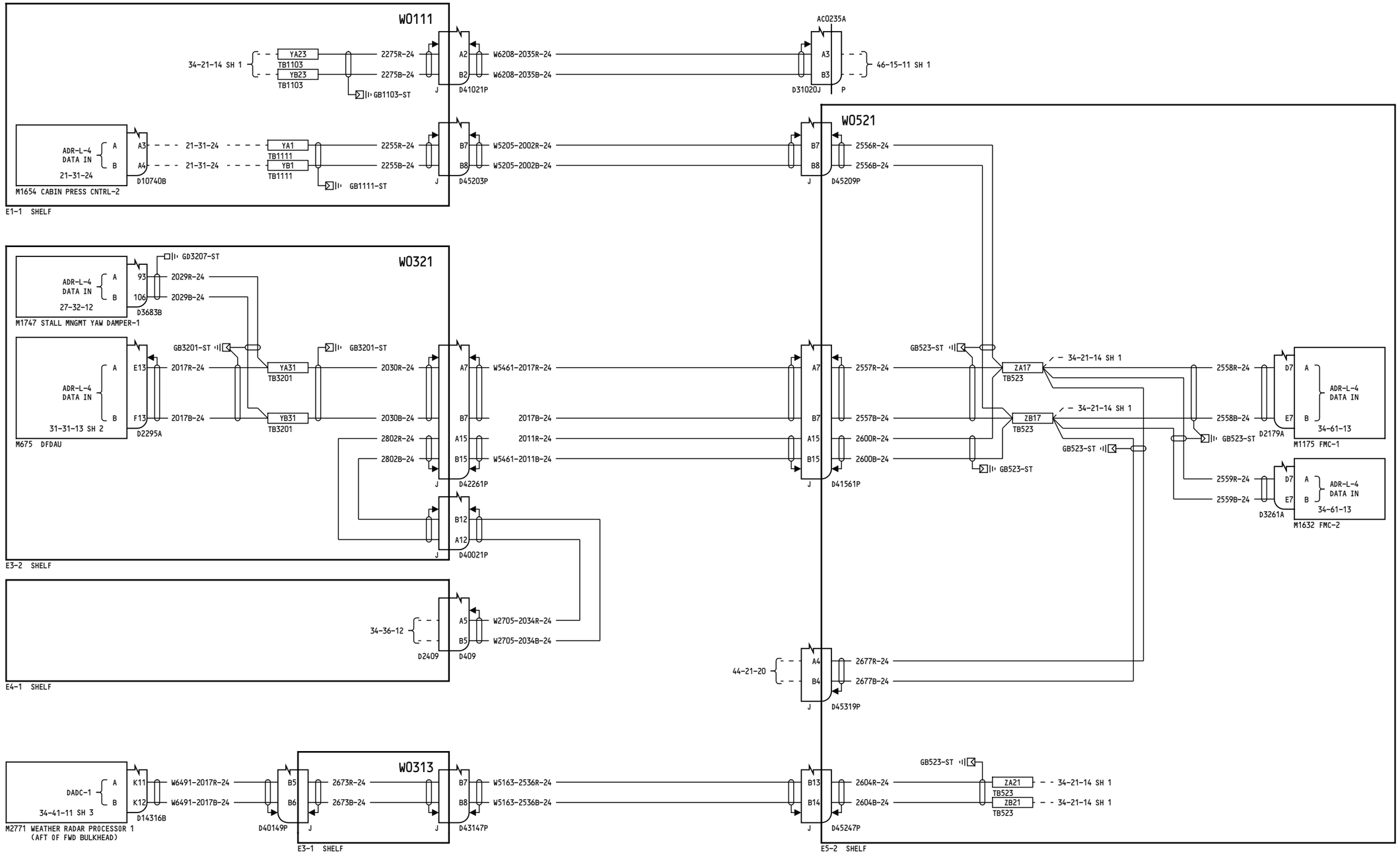

YT116-YT120

AIR DATA INERTIAL REFERENCE SYSTEM (ADIRS) - LEFT ADR OUTPUTS

D280A351

BOEING PROPRIETARY - Copyright © - Unpublished Work - See title page for details.

34-21-14

Page 4
Sheet 2
Mar 14/2016

57

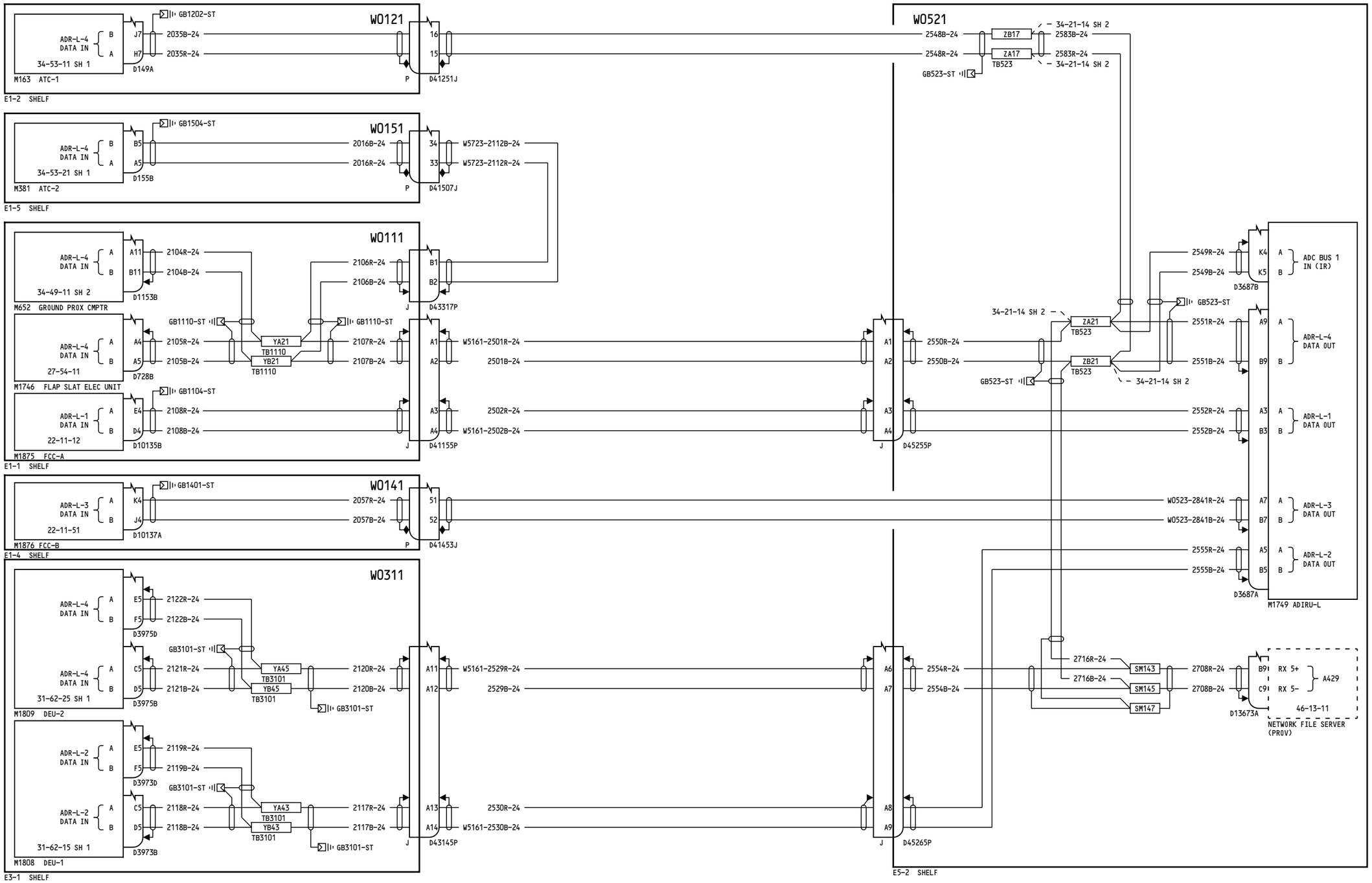

YT126-YT131

AIR DATA INERTIAL REFERENCE SYSTEM (ADIRS) - LEFT ADR OUTPUTS

D280A351

34-21-14

Page 5
Sheet 1
Dec 10/2015

BOEING PROPRIETARY - Copyright © - Unpublished Work - See title page for details.

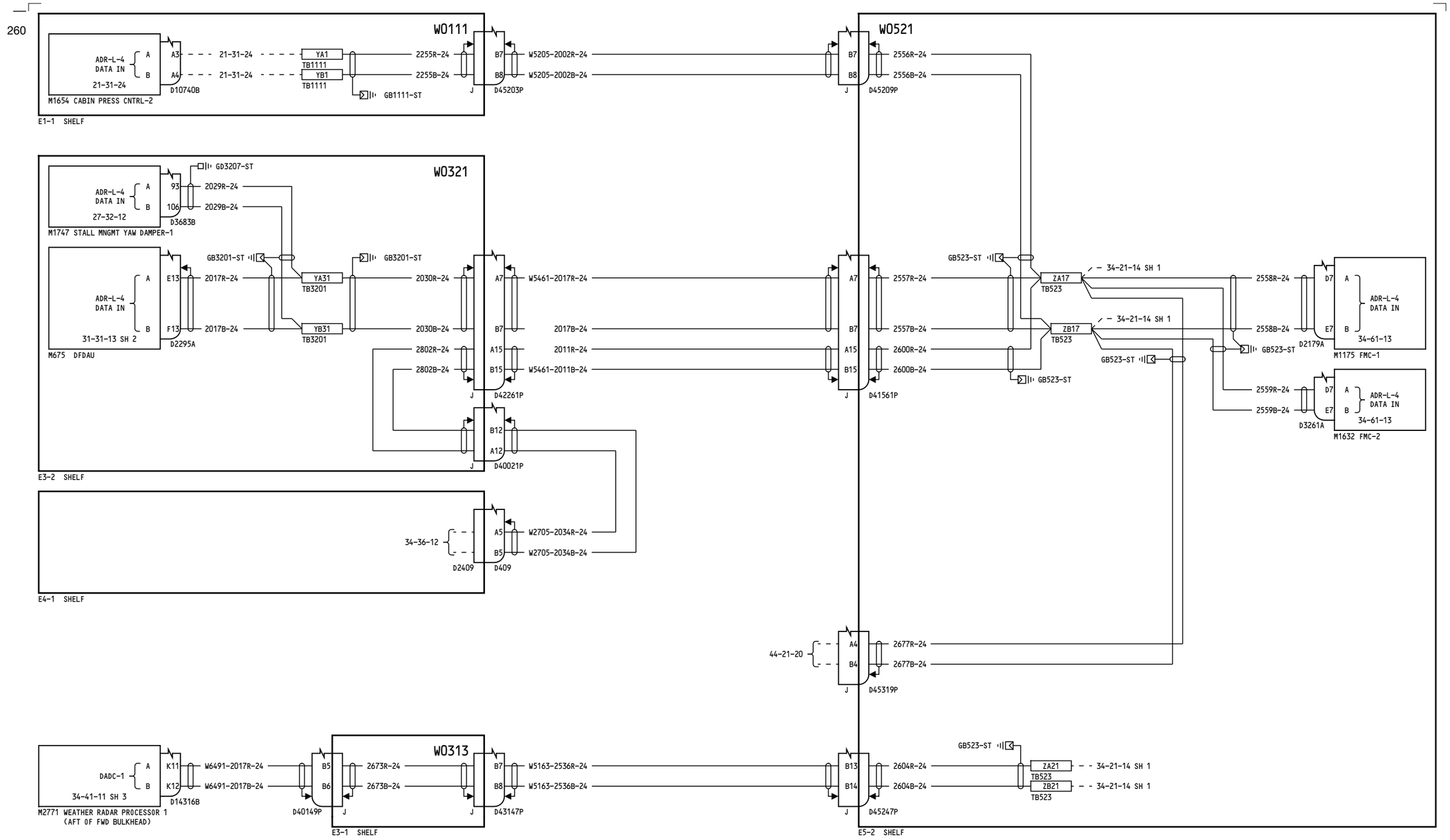

YT126-YT131	**AIR DATA INERTIAL REFERENCE SYSTEM (ADIRS) - LEFT ADR OUTPUTS**
	D280A351

BOEING PROPRIETARY - Copyright © - Unpublished Work - See title page for details.

34-21-14

Page 5
Sheet 2
Dec 10/2015

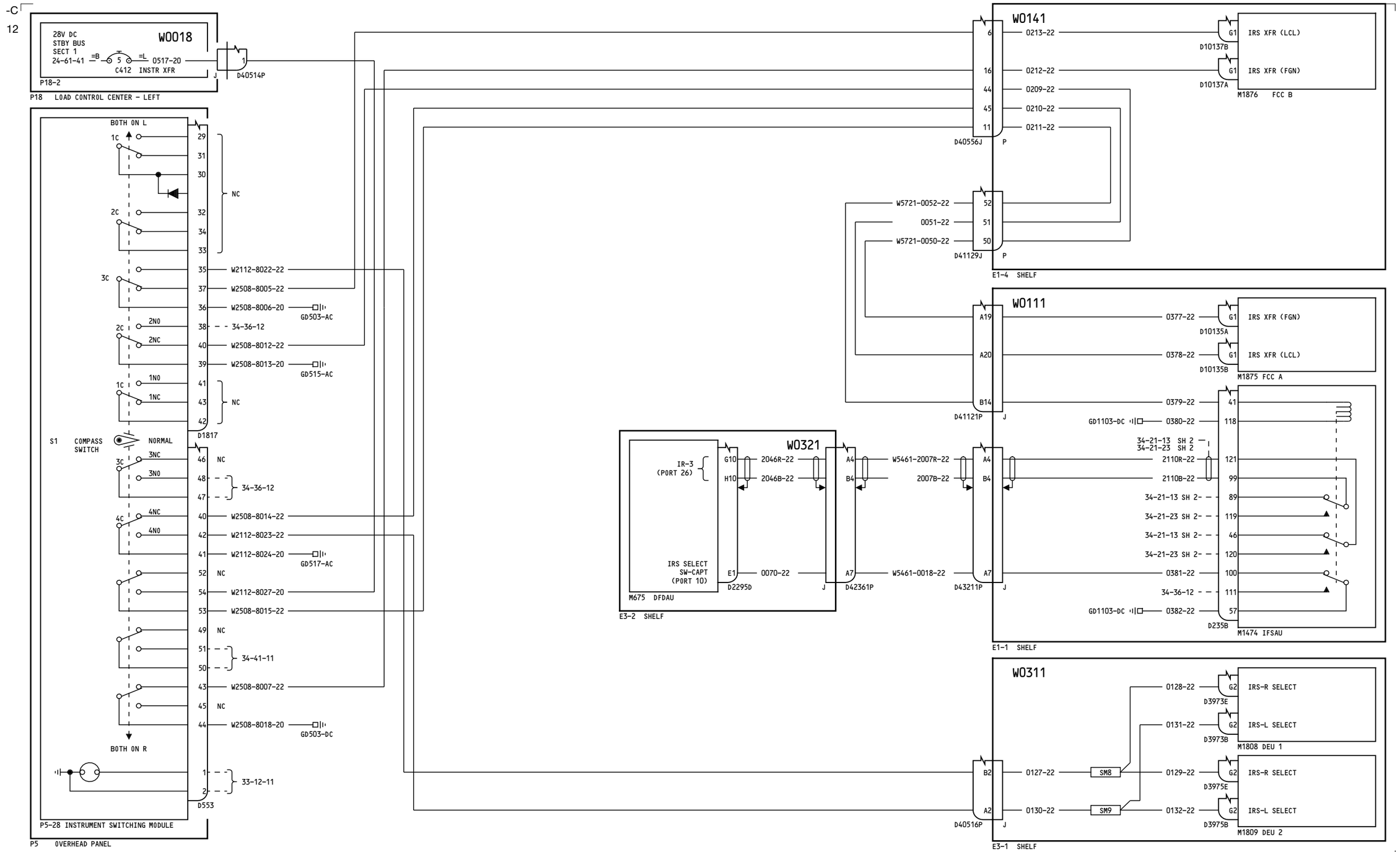

ALL	AIR DATA INERTIAL REFERENCE SYSTEM - IR SIGNAL SWITCHING D280A351	34-21-15 Page 1 Jun 21/2016	34-21-15 Page 1 Jun 21/2016

BOEING PROPRIETARY - Copyright © - Unpublished Work - See title page for details.

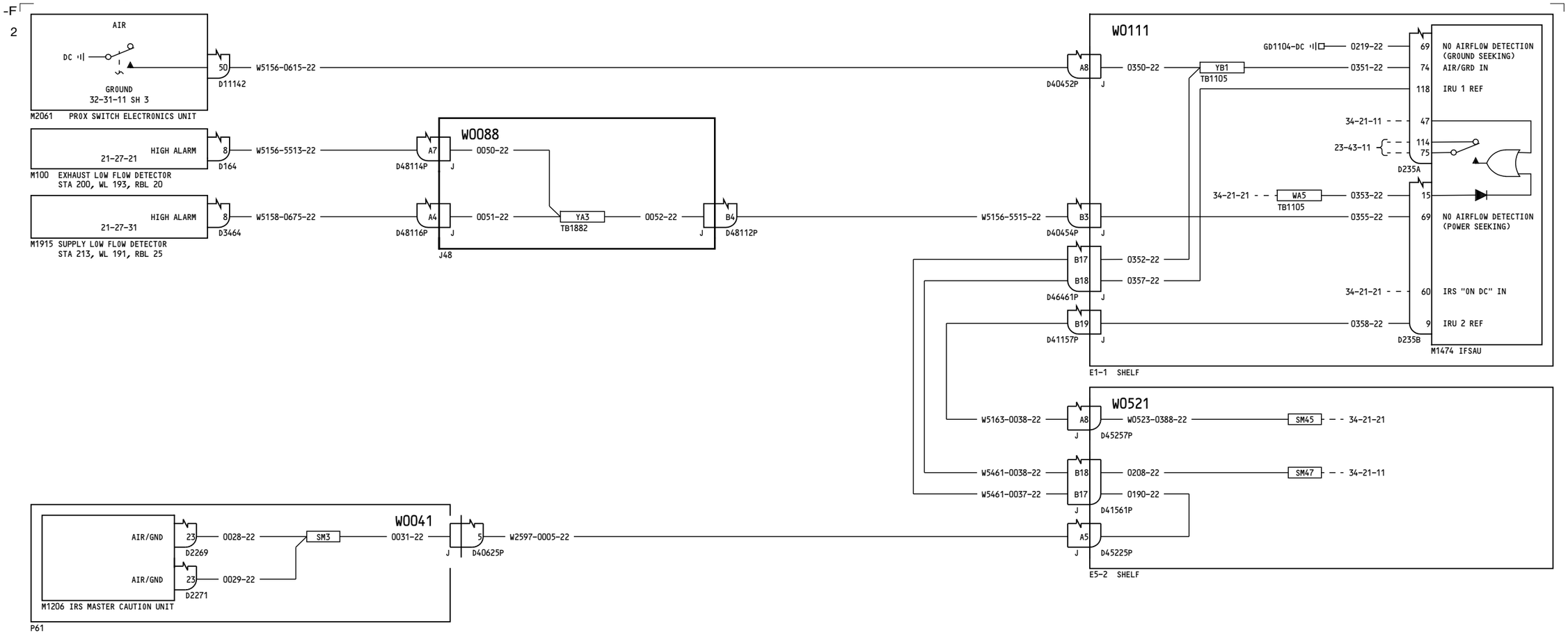

ALL	ADIRS - NO COOLING AND "ON DC" OPERATION WARNING D280A351

BOEING PROPRIETARY - Copyright © - Unpublished Work - See title page for details.

34-21-16
Page 1
Jun 21/2016

-A
62

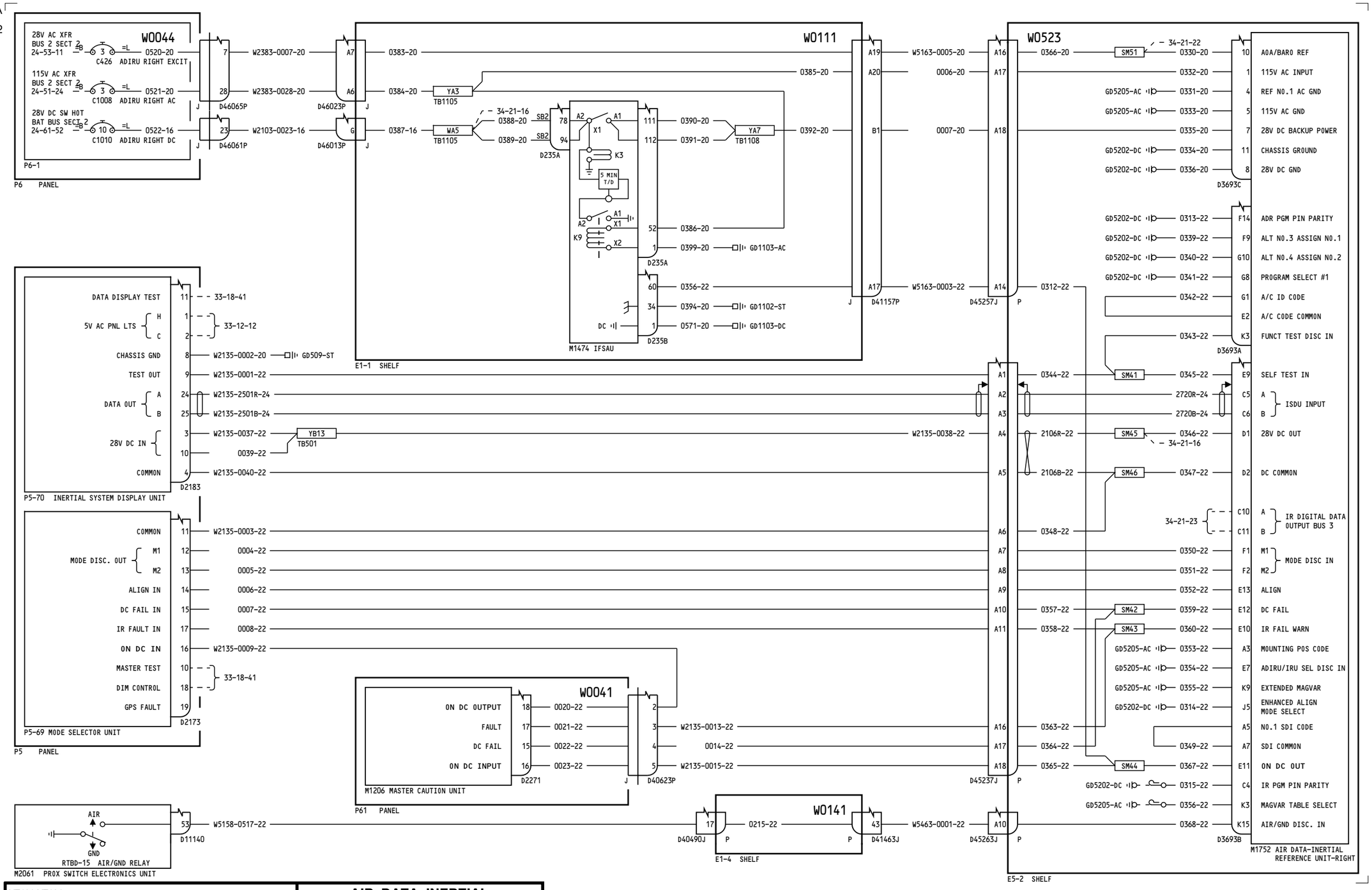

YT101-YT104

AIR DATA INERTIAL REFERENCE SYSTEM (ADIRS) - RIGHT CONTROL & WARNING

D280A351

34-21-21
Page 1
Dec 10/2015

BOEING PROPRIETARY - Copyright © - Unpublished Work - See title page for details.

-A
81

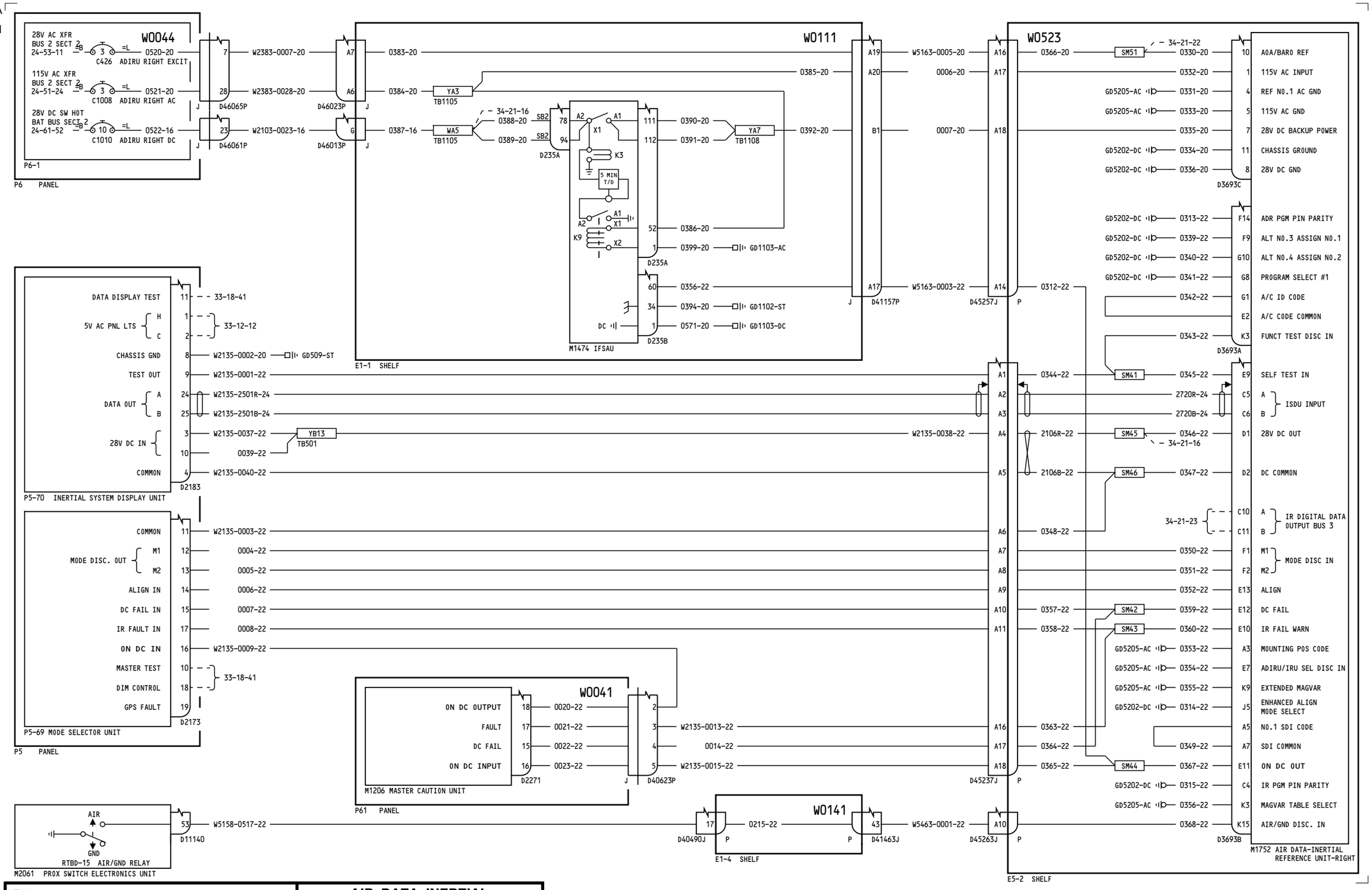

YT105

AIR DATA INERTIAL REFERENCE SYSTEM (ADIRS) - RIGHT CONTROL & WARNING

D280A351

34-21-21
Page 2
Dec 10/2015

BOEING PROPRIETARY - Copyright © - Unpublished Work - See title page for details.

-A
94

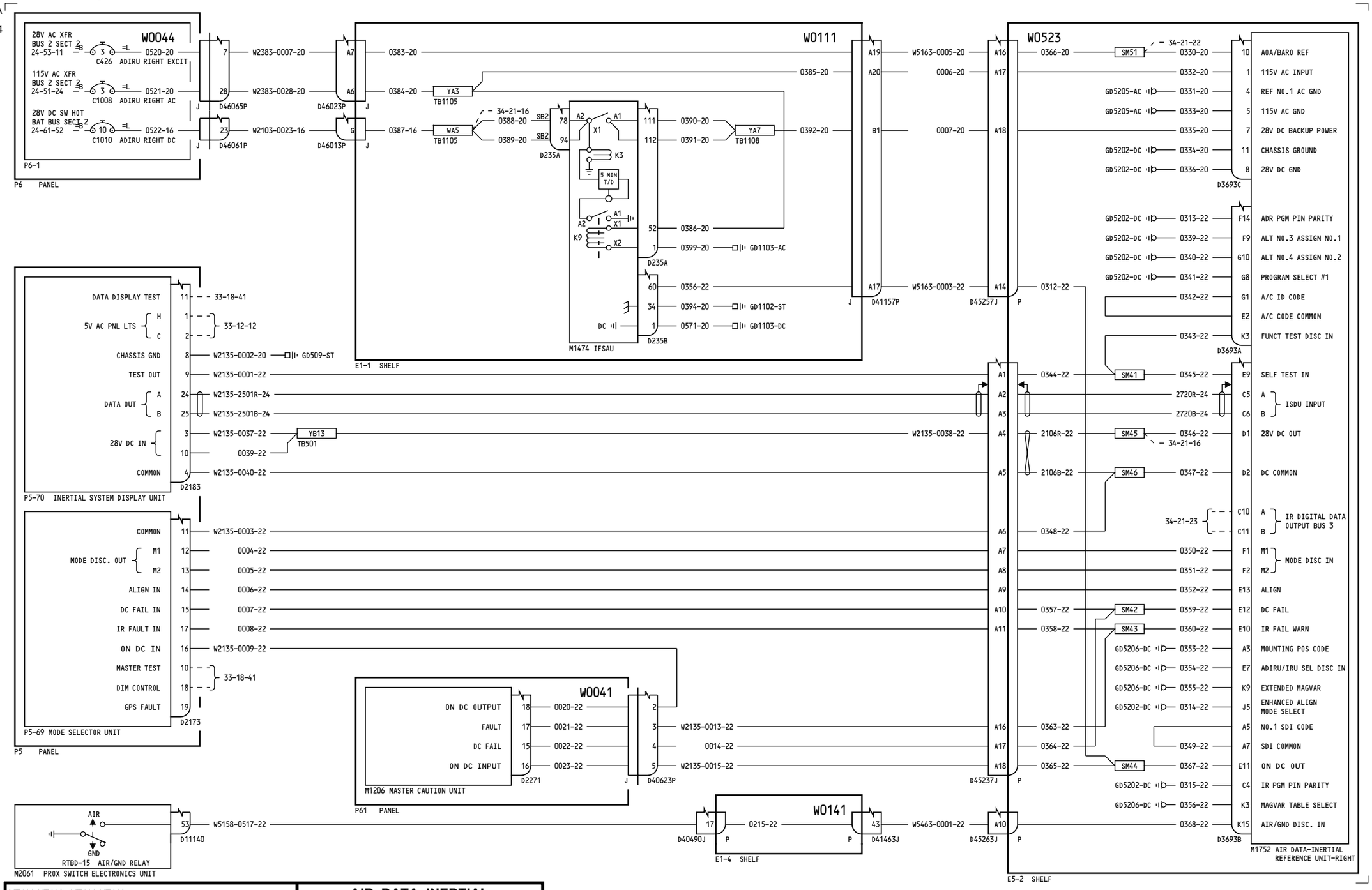

YT106-YT119, YT126-YT129

AIR DATA INERTIAL REFERENCE SYSTEM (ADIRS) - RIGHT CONTROL & WARNING

D280A351

34-21-21
Page 3
Jun 21/2016

BOEING PROPRIETARY - Copyright © - Unpublished Work - See title page for details.

-A
98

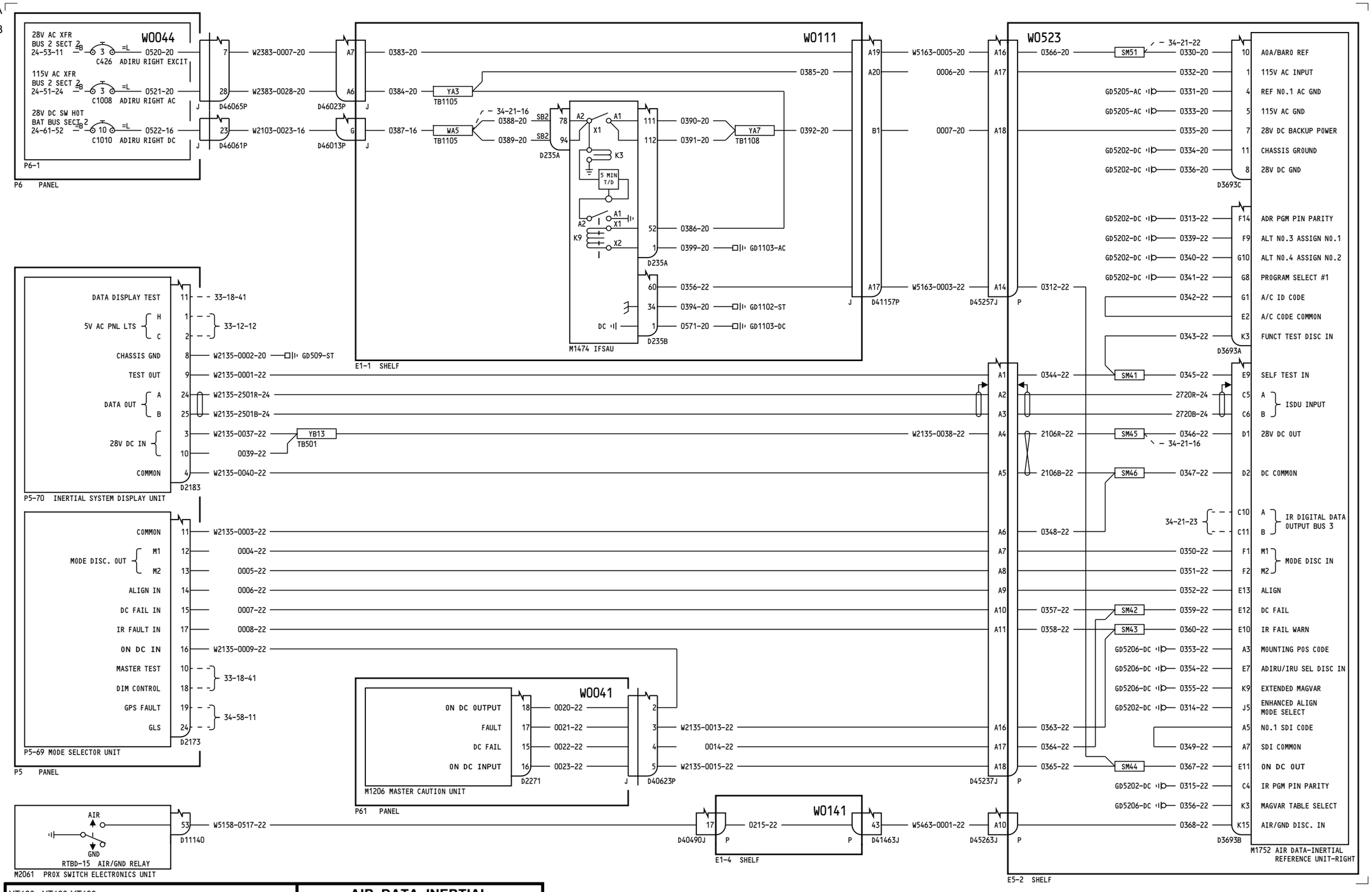

YT120, YT130-YT133

AIR DATA INERTIAL REFERENCE SYSTEM (ADIRS) - RIGHT CONTROL & WARNING

D280A351

34-21-21
Page 4
Jun 21/2016

BOEING PROPRIETARY - Copyright © - Unpublished Work - See title page for details.

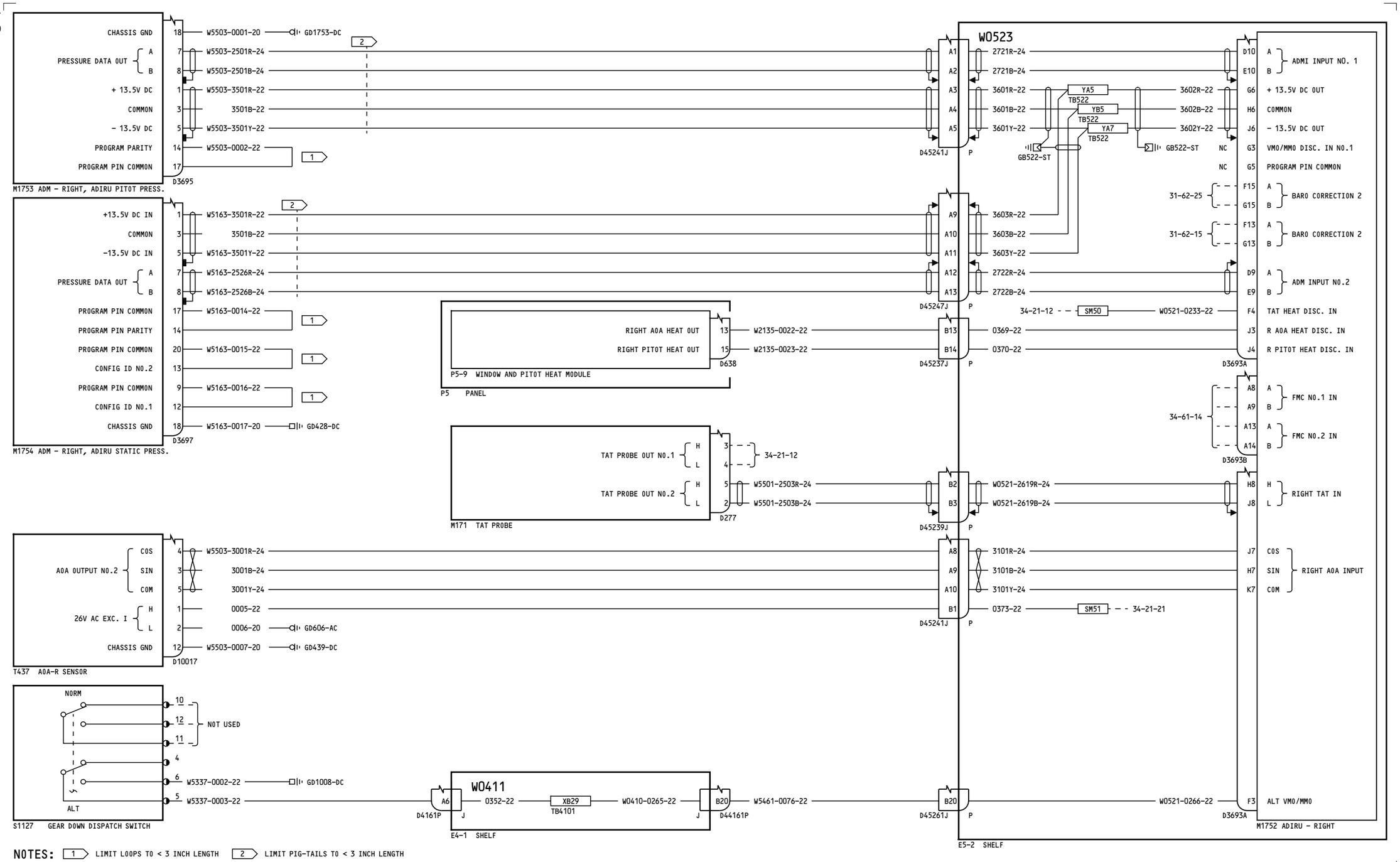

NOTES: 1 LIMIT LOOPS TO < 3 INCH LENGTH 2 LIMIT PIG-TAILS TO < 3 INCH LENGTH

ALL

AIR DATA INERTIAL REFERENCE SYSTEM (ADIRS) - RIGHT SYSTEM INPUTS

D280A351

34-21-22
Page 1
Jun 21/2016

BOEING PROPRIETARY - Copyright © - Unpublished Work - See title page for details.

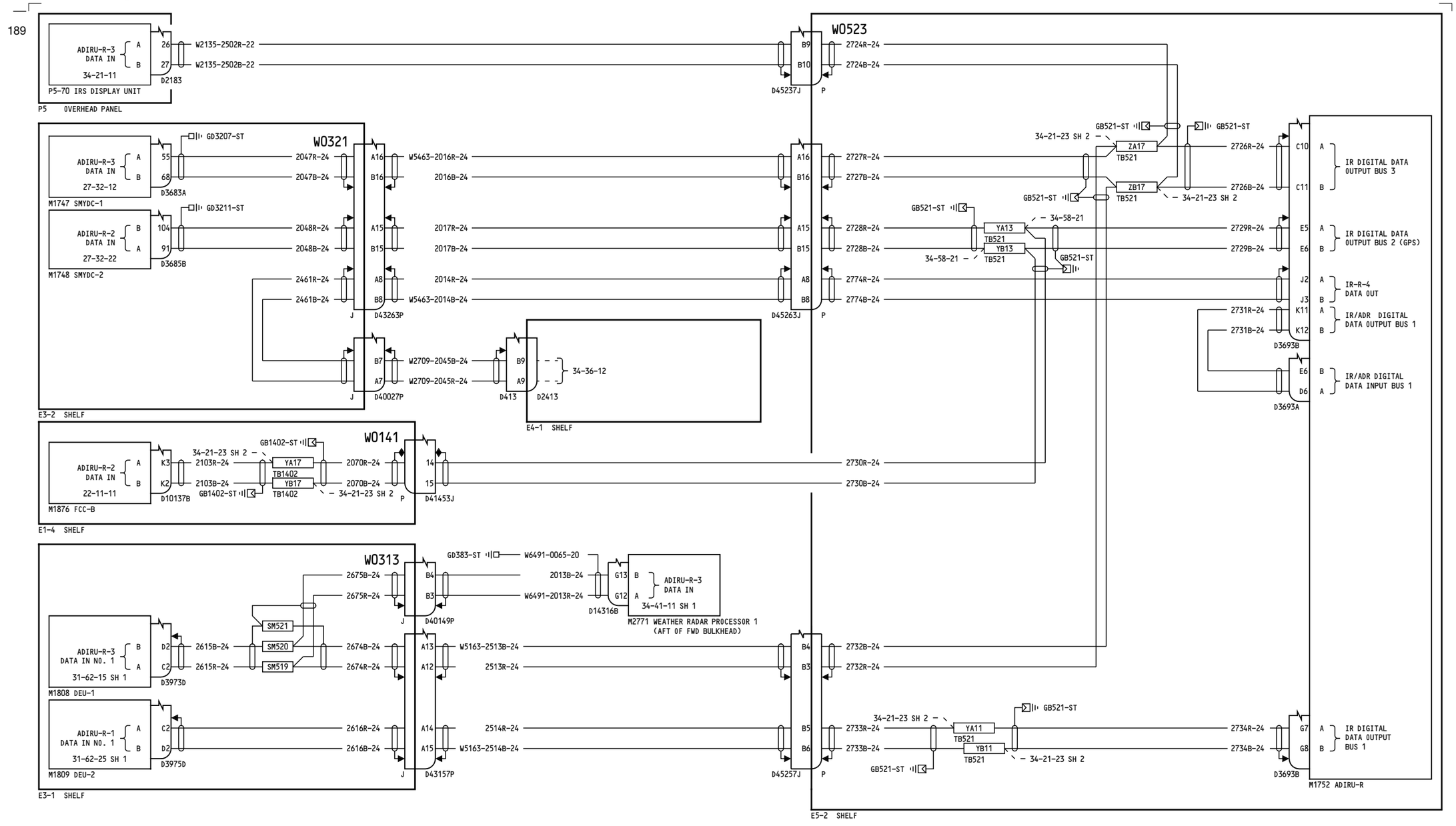

YT101-YT102

AIR DATA INERTIAL REFERENCE SYSTEM (ADIRS) - RIGHT IR OUTPUTS

D280A351

34-21-23

Page 1
Sheet 1
Nov 18/2013

BOEING PROPRIETARY - Copyright © - Unpublished Work - See title page for details.

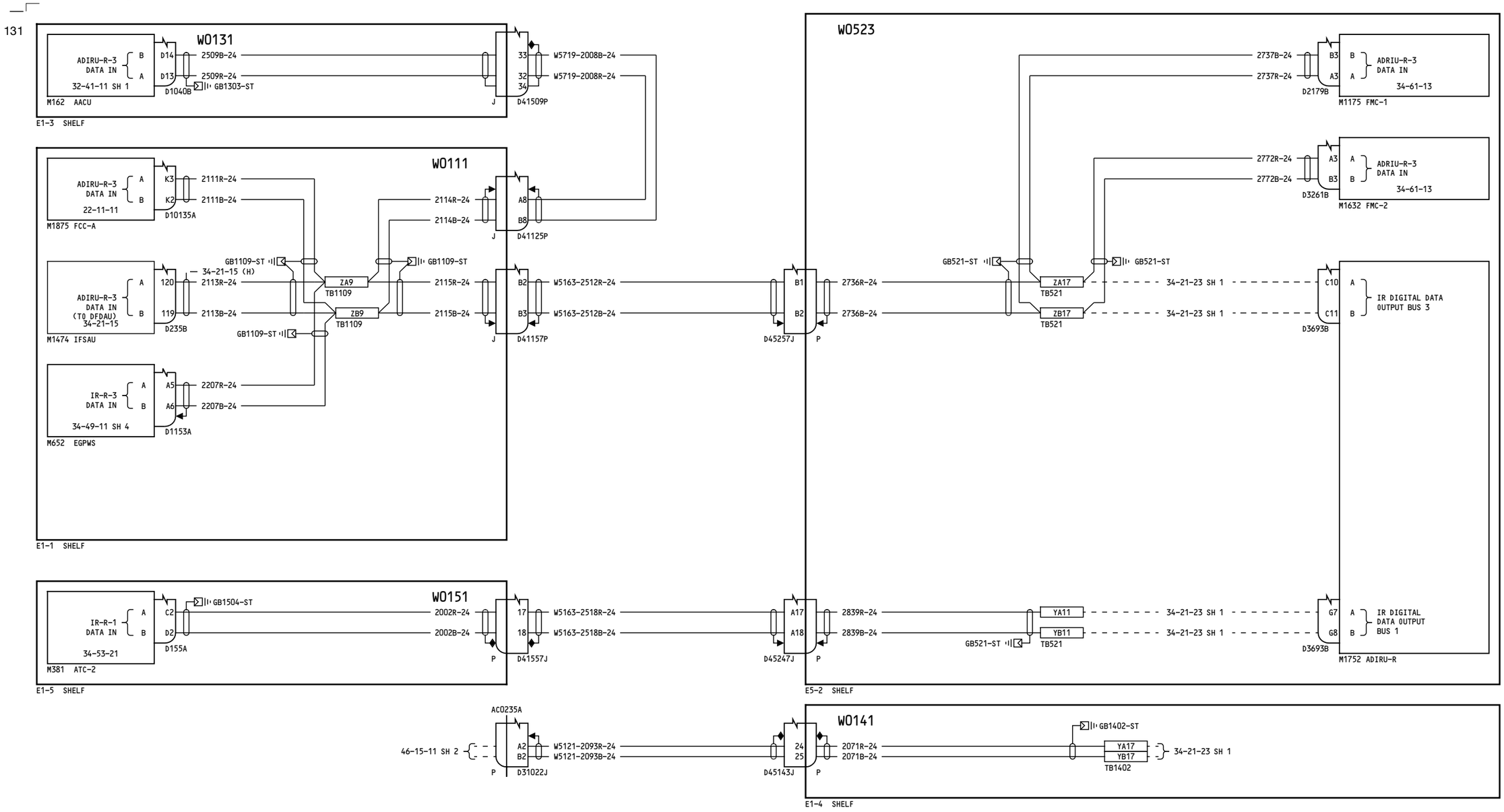

YT101-YT102

AIR DATA INERTIAL REFERENCE SYSTEM (ADIRS) - RIGHT IR OUTPUTS

D280A351

BOEING PROPRIETARY - Copyright © - Unpublished Work - See title page for details.

34-21-23

Page 1
Sheet 2
Nov 18/2013

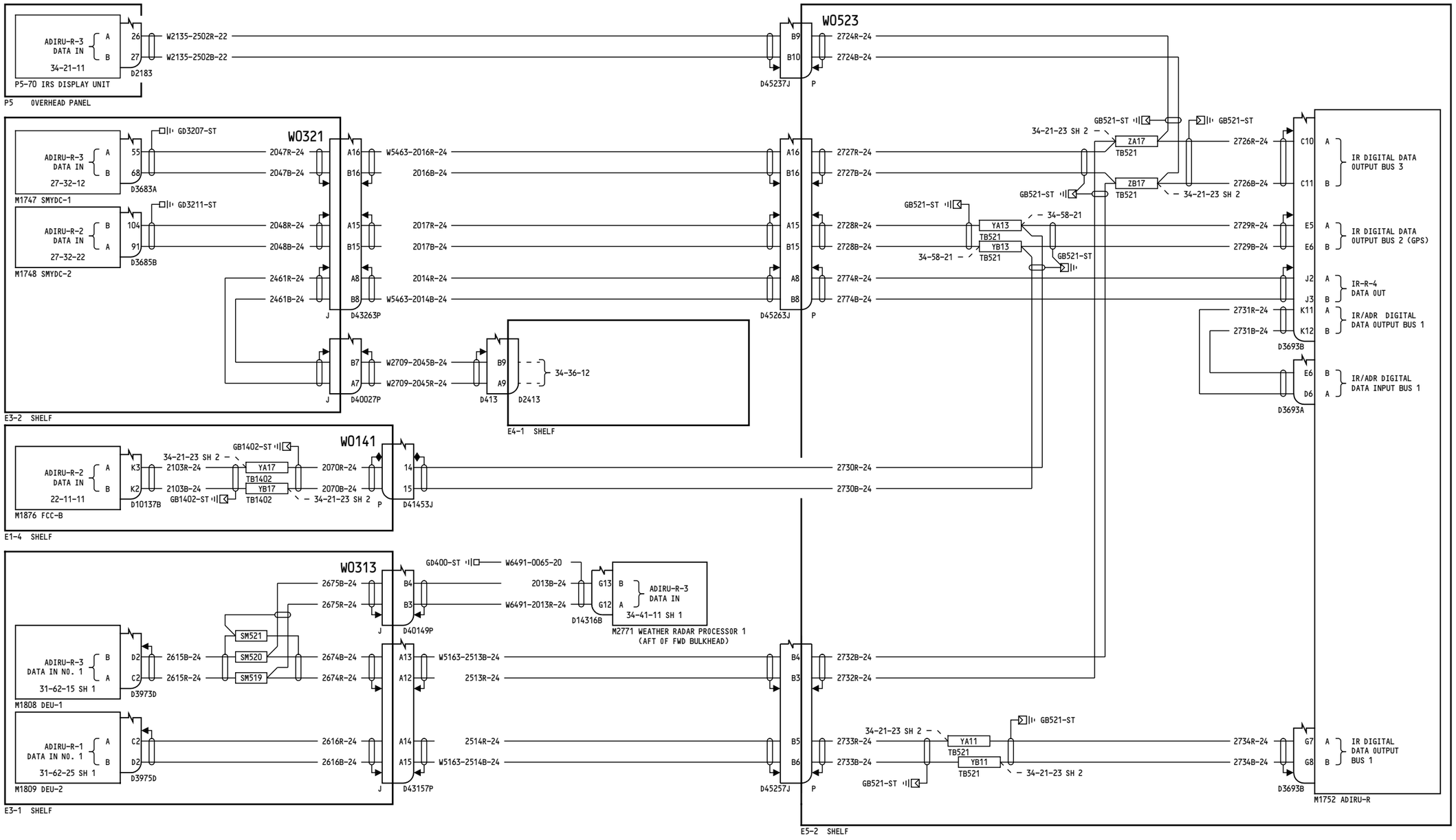

YT103

AIR DATA INERTIAL REFERENCE SYSTEM (ADIRS) - RIGHT IR OUTPUTS

D280A351

BOEING PROPRIETARY - Copyright © - Unpublished Work - See title page for details.

34-21-23

Page 2
Sheet 1
Nov 18/2013

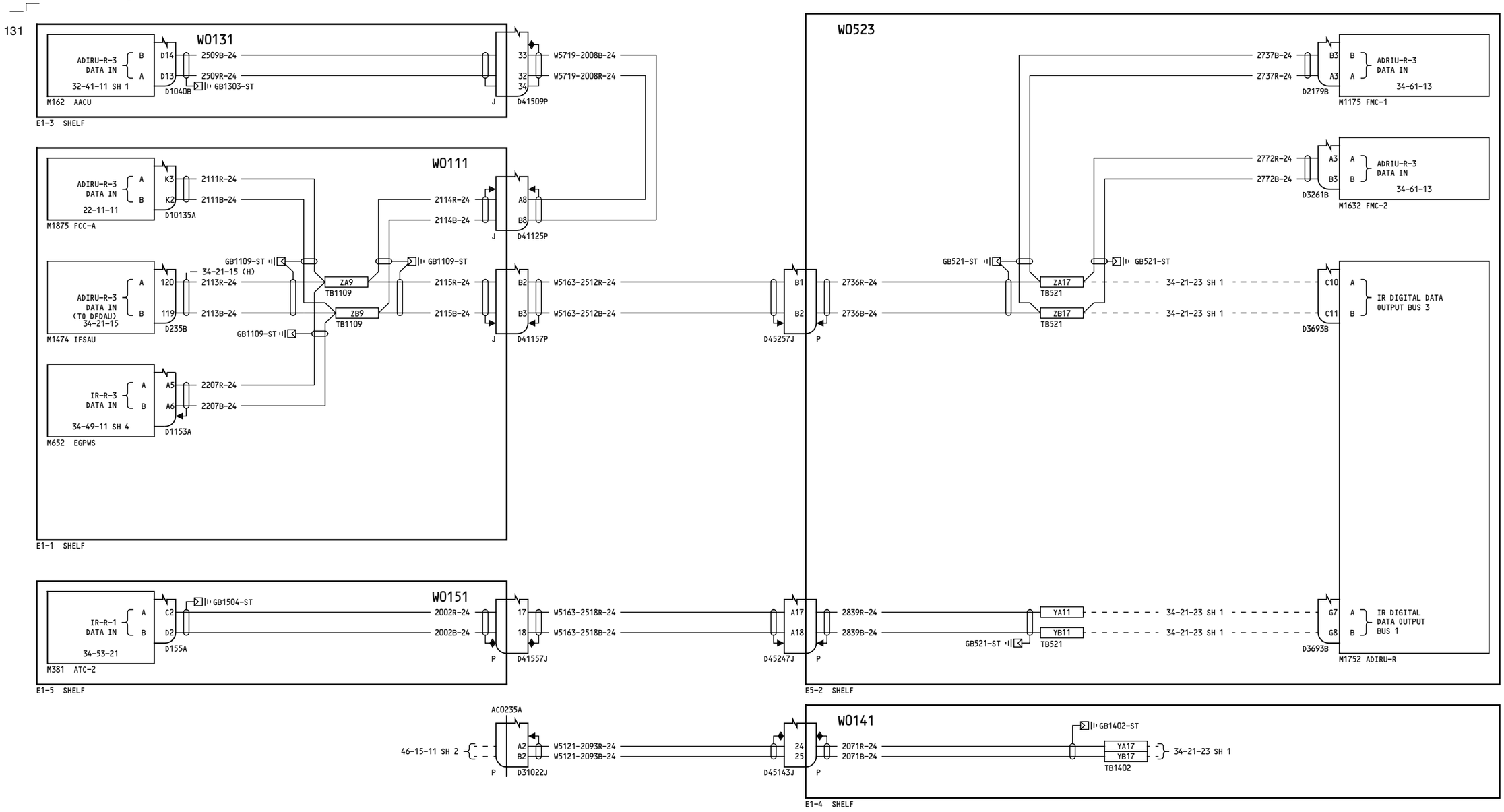

YT103

AIR DATA INERTIAL REFERENCE SYSTEM (ADIRS) - RIGHT IR OUTPUTS

D280A351

BOEING PROPRIETARY - Copyright © - Unpublished Work - See title page for details.

34-21-23

Page 2
Sheet 2
Nov 18/2013

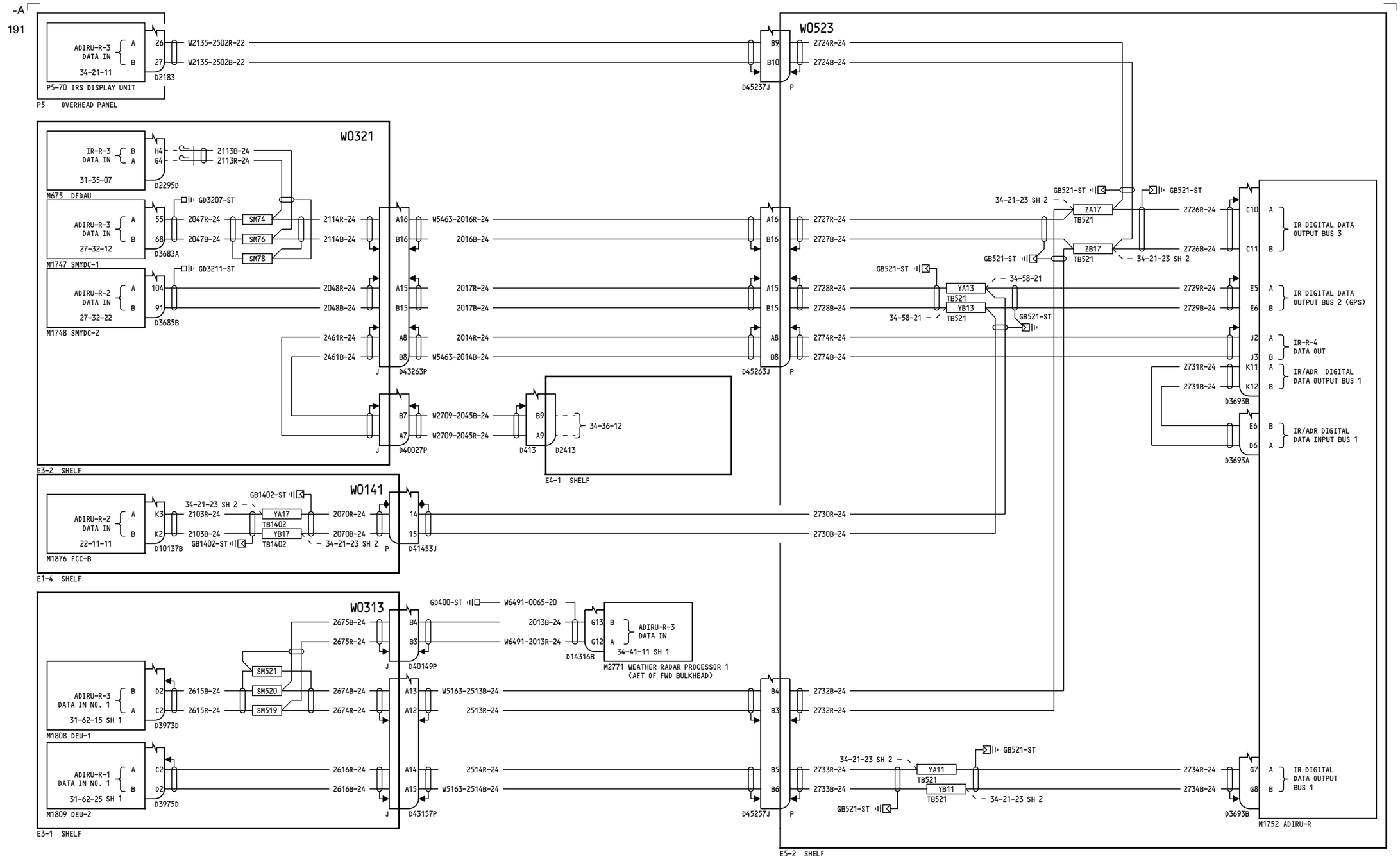

YT104-YT120

AIR DATA INERTIAL REFERENCE SYSTEM (ADIRS) - RIGHT IR OUTPUTS

D280A351

34-21-23

Page 3
Sheet 1
Mar 14/2016

BOEING PROPRIETARY - Copyright © - Unpublished Work - See title page for details.

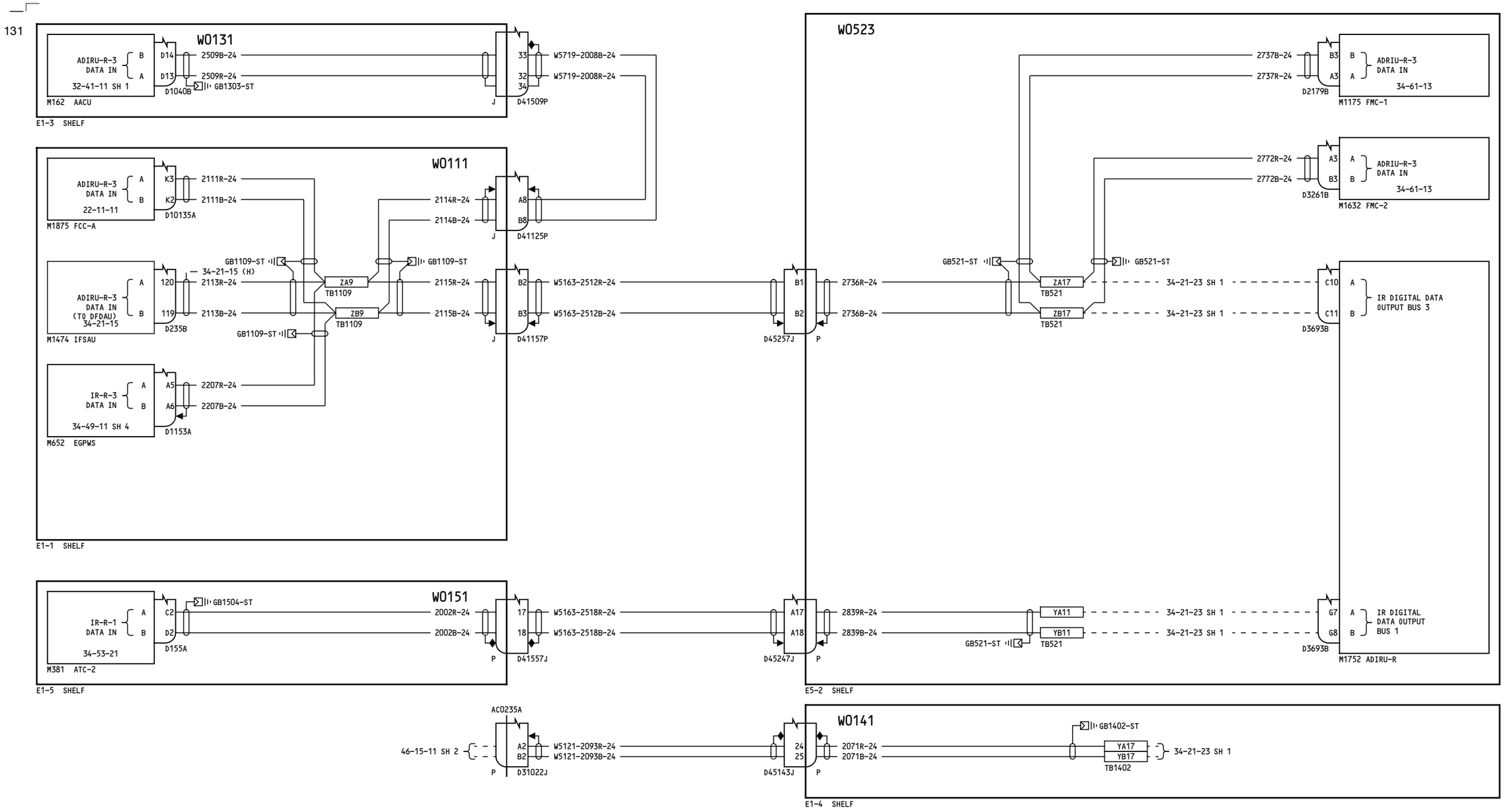

YT104-YT120

AIR DATA INERTIAL REFERENCE SYSTEM (ADIRS) - RIGHT IR OUTPUTS

D280A351

BOEING PROPRIETARY - Copyright © - Unpublished Work - See title page for details.

34-21-23

Page 3
Sheet 2
Mar 14/2016

-C
187

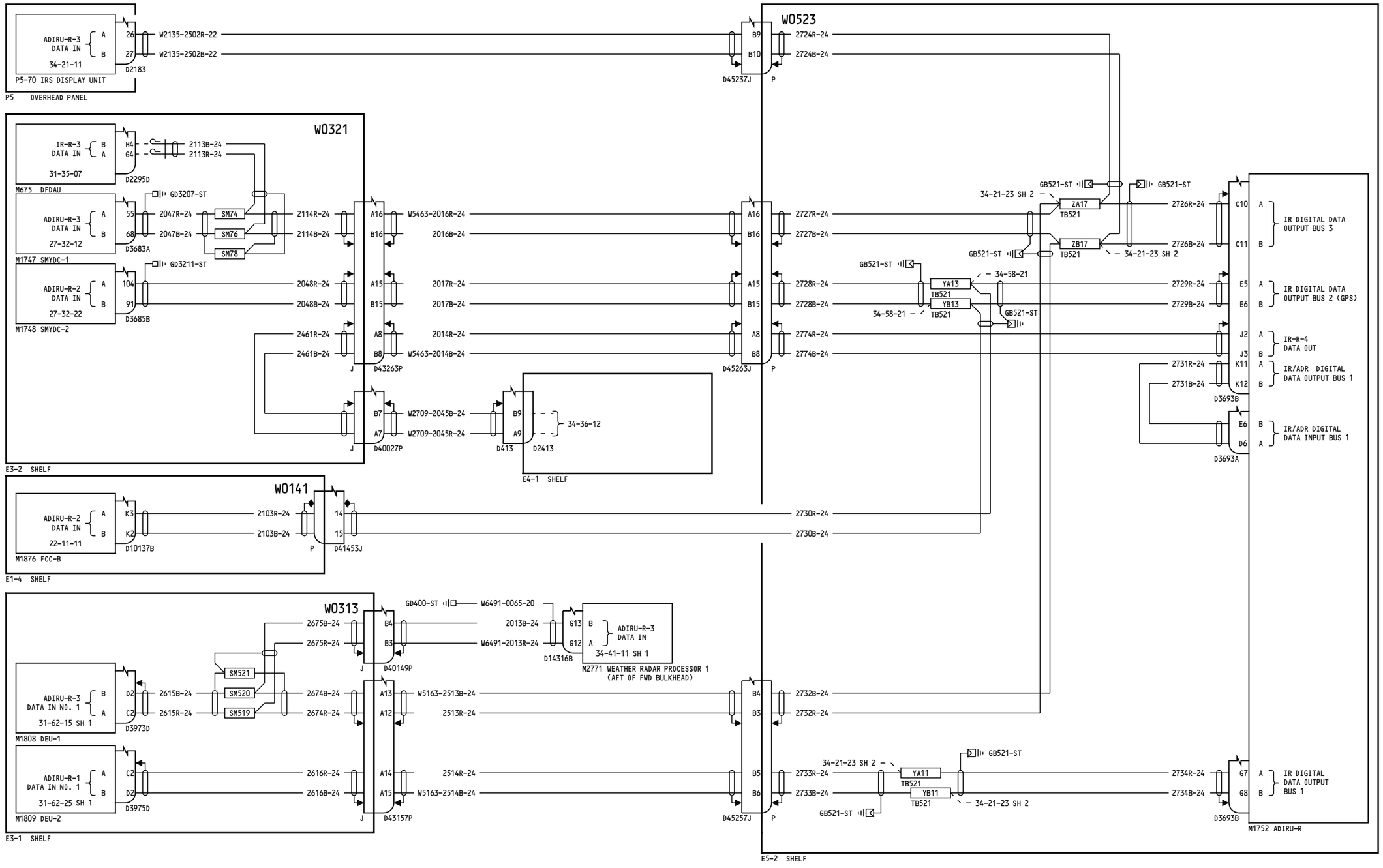

YT126-YT133

AIR DATA INERTIAL REFERENCE SYSTEM (ADIRS) - RIGHT IR OUTPUTS

D280A351

BOEING PROPRIETARY - Copyright © - Unpublished Work - See title page for details.

34-21-23
Page 4
Sheet 1
Jun 21/2016

94

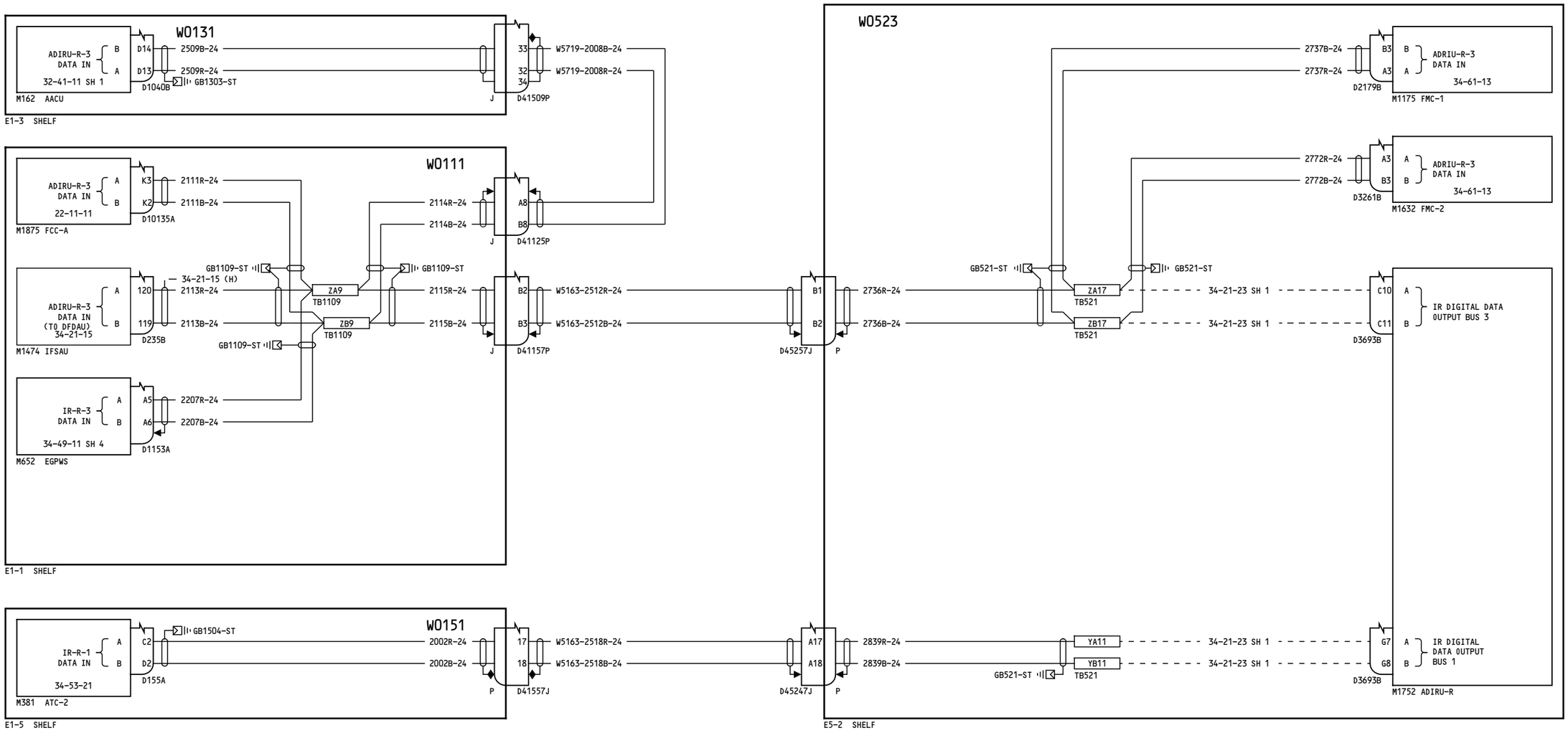

YT126-YT133

AIR DATA INERTIAL REFERENCE SYSTEM (ADIRS) - RIGHT IR OUTPUTS

D280A351

BOEING PROPRIETARY - Copyright © - Unpublished Work - See title page for details.

34-21-23

Page 4
Sheet 2
Jun 21/2016

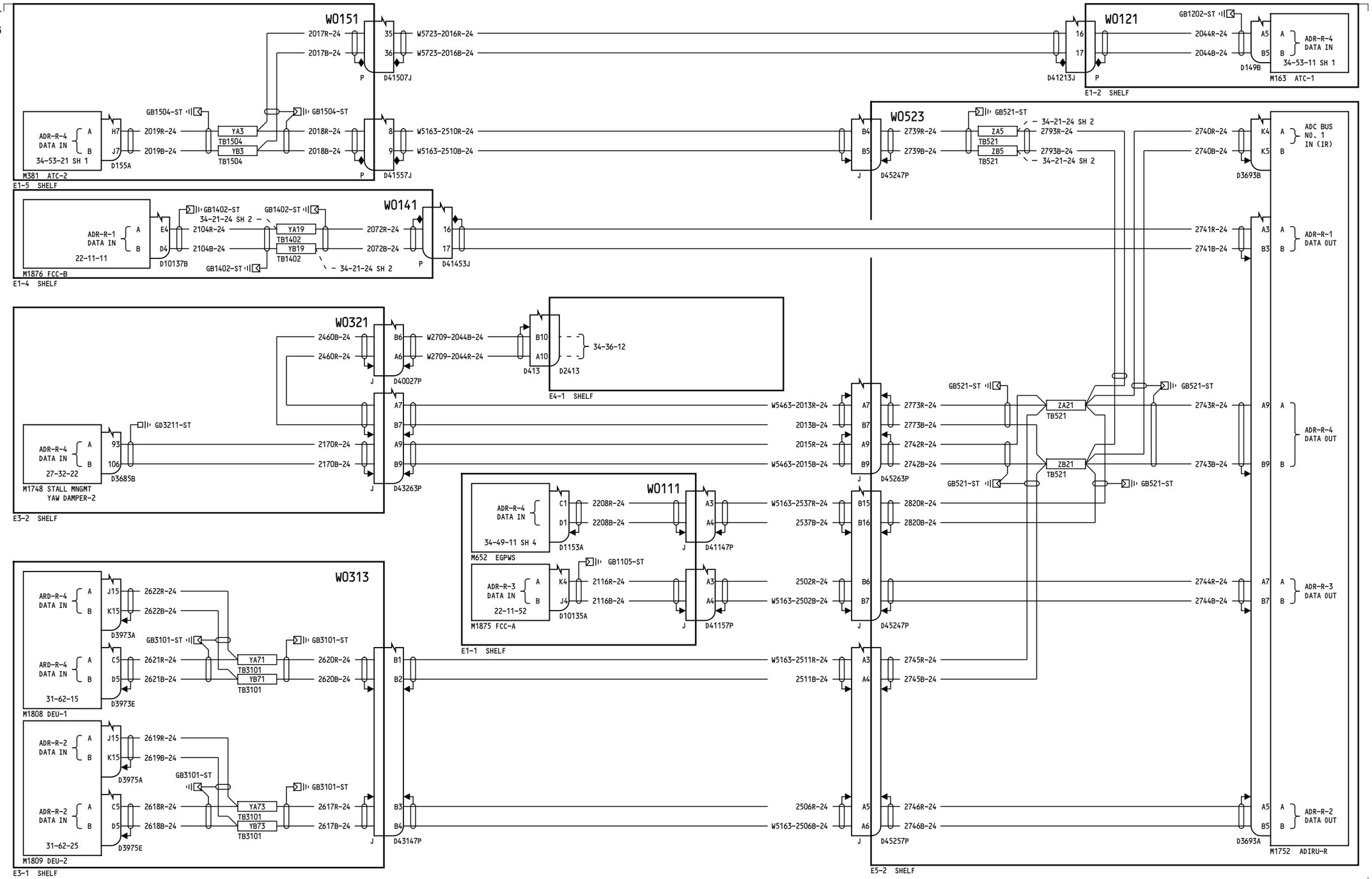

YT101-YT103

AIR DATA INERTIAL REFERENCE SYSTEM (ADIRS) - RIGHT ADR OUTPUTS

D280A351

34-21-24

Page 1
Sheet 1
Aug 15/2013

BOEING PROPRIETARY - Copyright © - Unpublished Work - See title page for details.

80

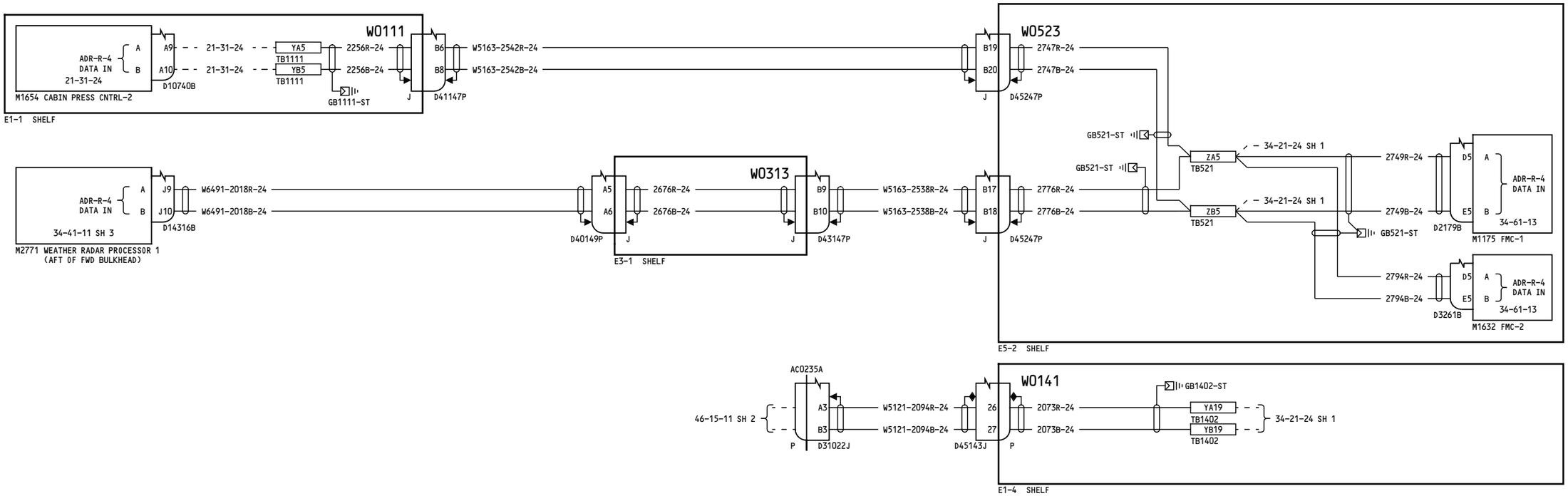

YT101-YT103	**AIR DATA INERTIAL REFERENCE SYSTEM (ADIRS) - RIGHT ADR OUTPUTS**
	D280A351

BOEING PROPRIETARY - Copyright © - Unpublished Work - See title page for details.

34-21-24

Page 1
Sheet 2
Aug 15/2013

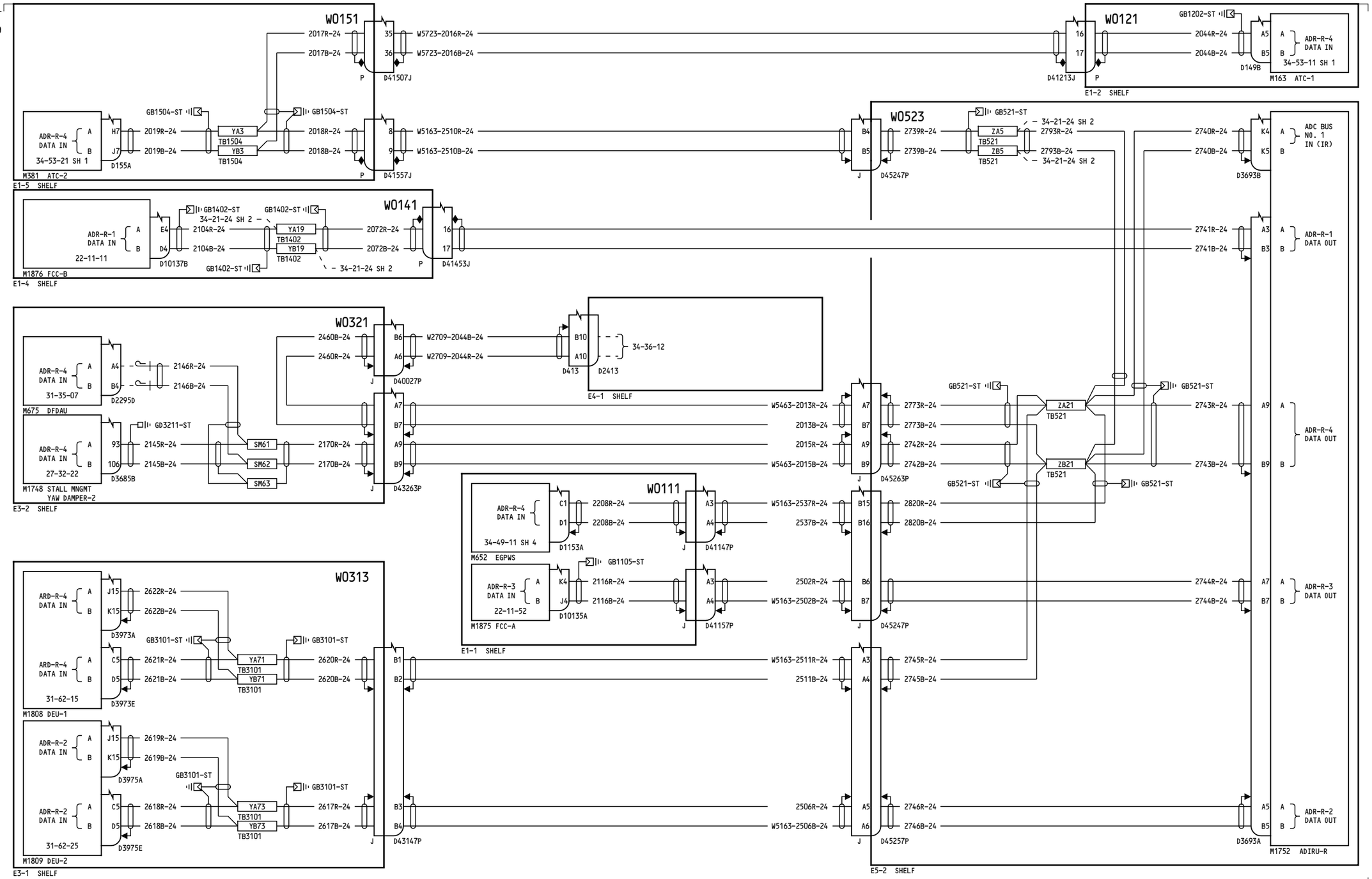

YT104-YT115

AIR DATA INERTIAL REFERENCE SYSTEM (ADIRS) - RIGHT ADR OUTPUTS

D280A351

34-21-24
Page 2
Sheet 1
Aug 31/2015

BOEING PROPRIETARY - Copyright © - Unpublished Work - See title page for details.

80

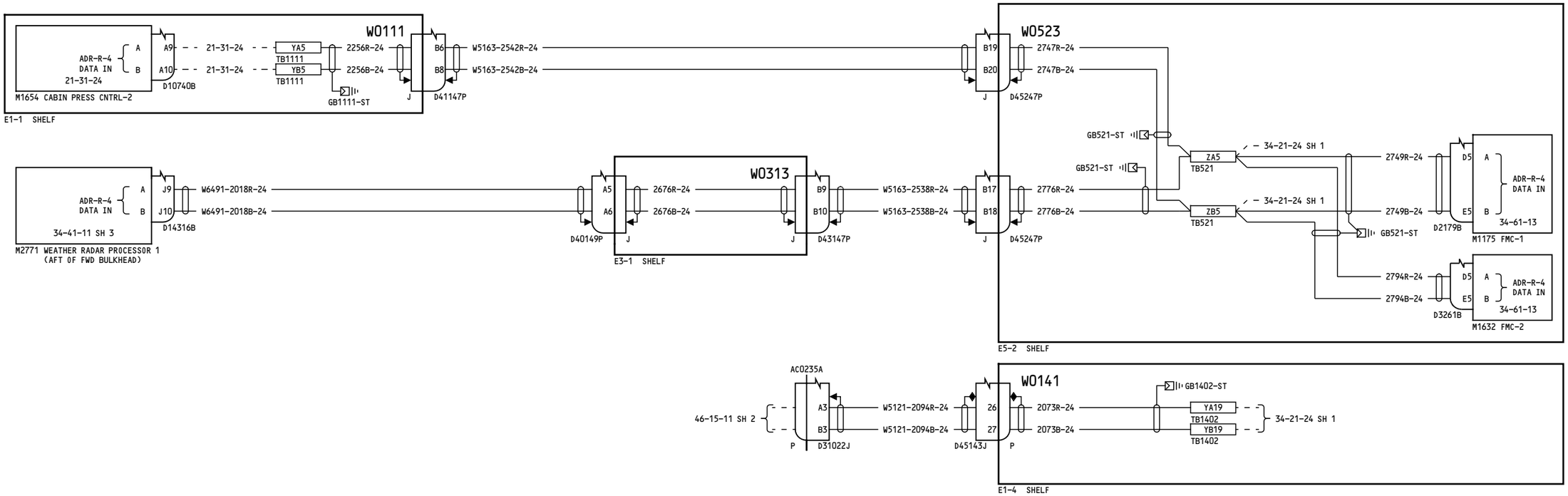

YT104-YT115	**AIR DATA INERTIAL REFERENCE SYSTEM (ADIRS) - RIGHT ADR OUTPUTS**
	D280A351

BOEING PROPRIETARY - Copyright © - Unpublished Work - See title page for details.

34-21-24

Page 2
Sheet 2
Aug 31/2015

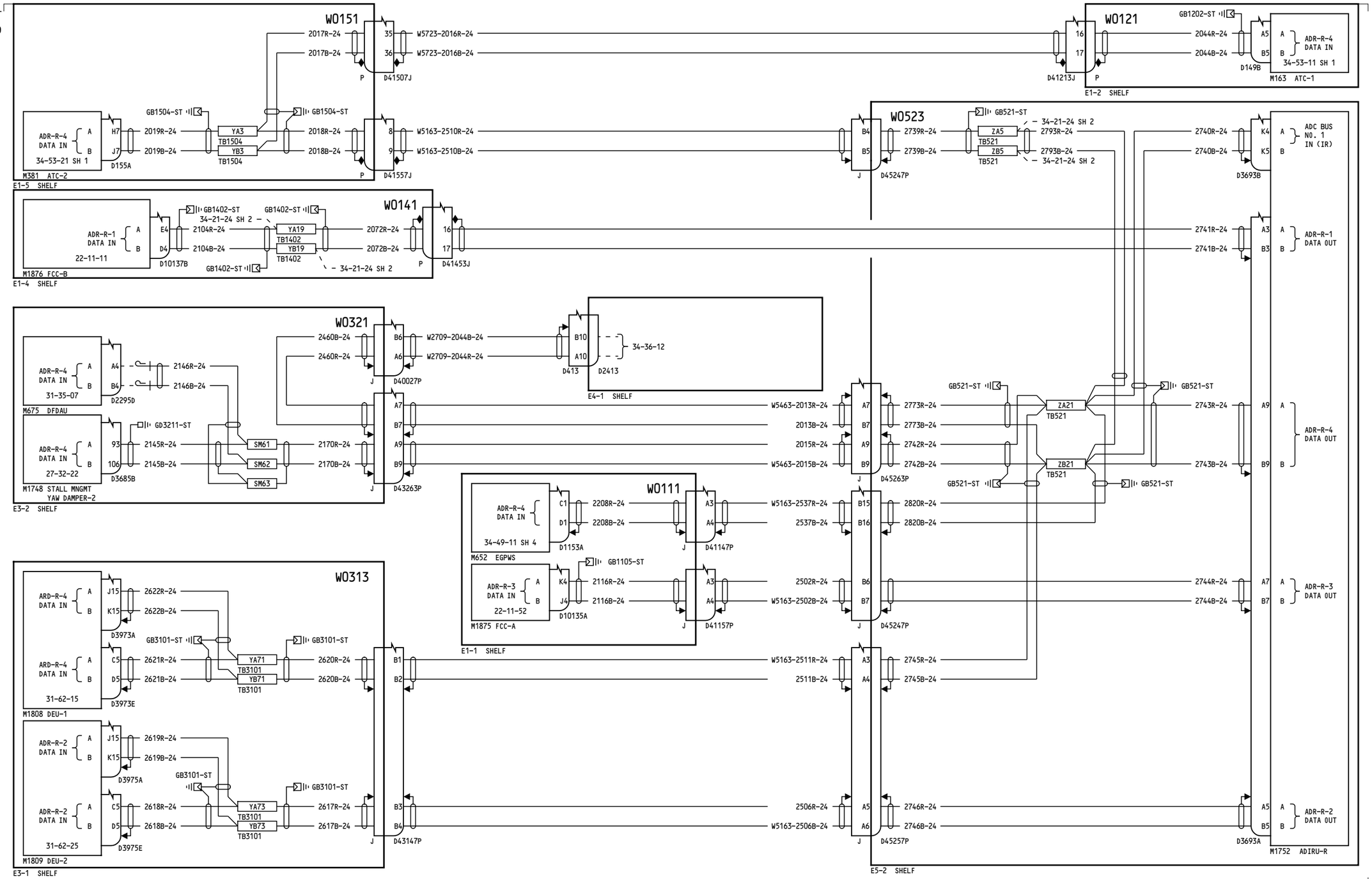

YT116-YT120

AIR DATA INERTIAL REFERENCE SYSTEM (ADIRS) - RIGHT ADR OUTPUTS

D280A351

34-21-24
Page 3
Sheet 1
Mar 14/2016

BOEING PROPRIETARY - Copyright © - Unpublished Work - See title page for details.

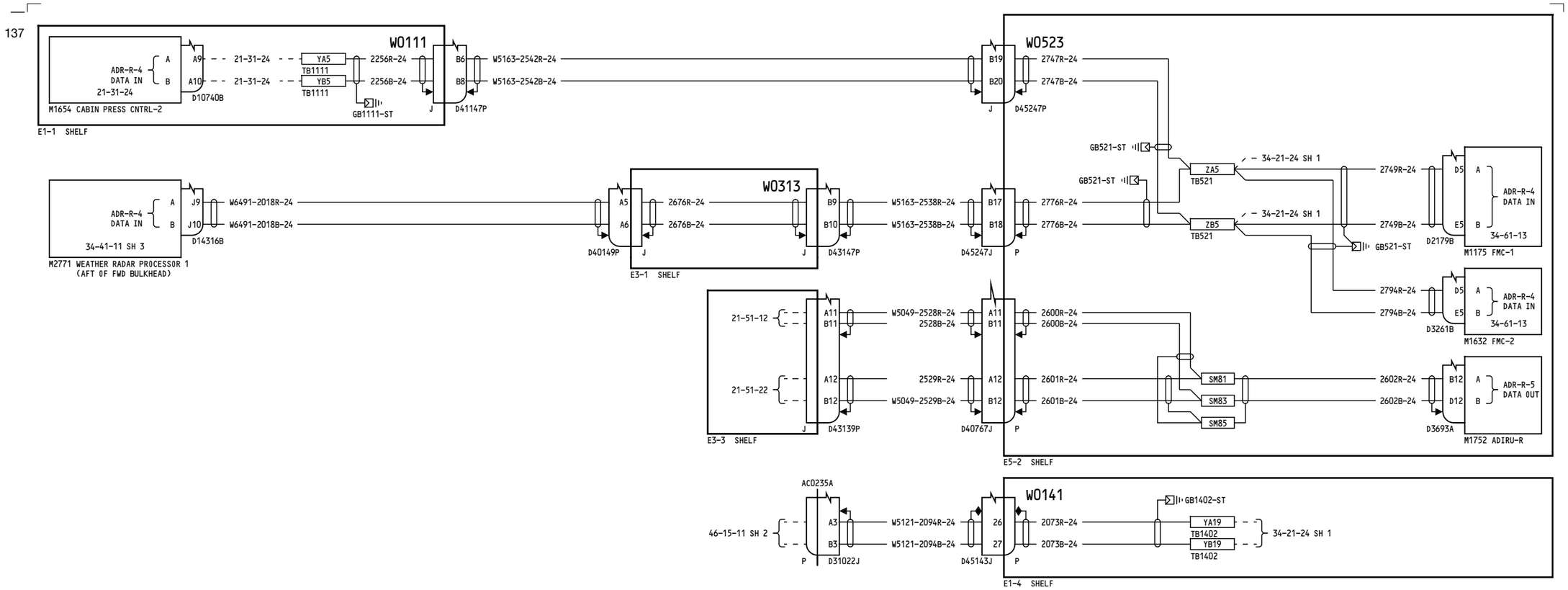

YT116-YT120	AIR DATA INERTIAL REFERENCE SYSTEM (ADIRS) - RIGHT ADR OUTPUTS D280A351

BOEING PROPRIETARY - Copyright © - Unpublished Work - See title page for details.

34-21-24
Page 3
Sheet 2
Mar 14/2016

-A
105

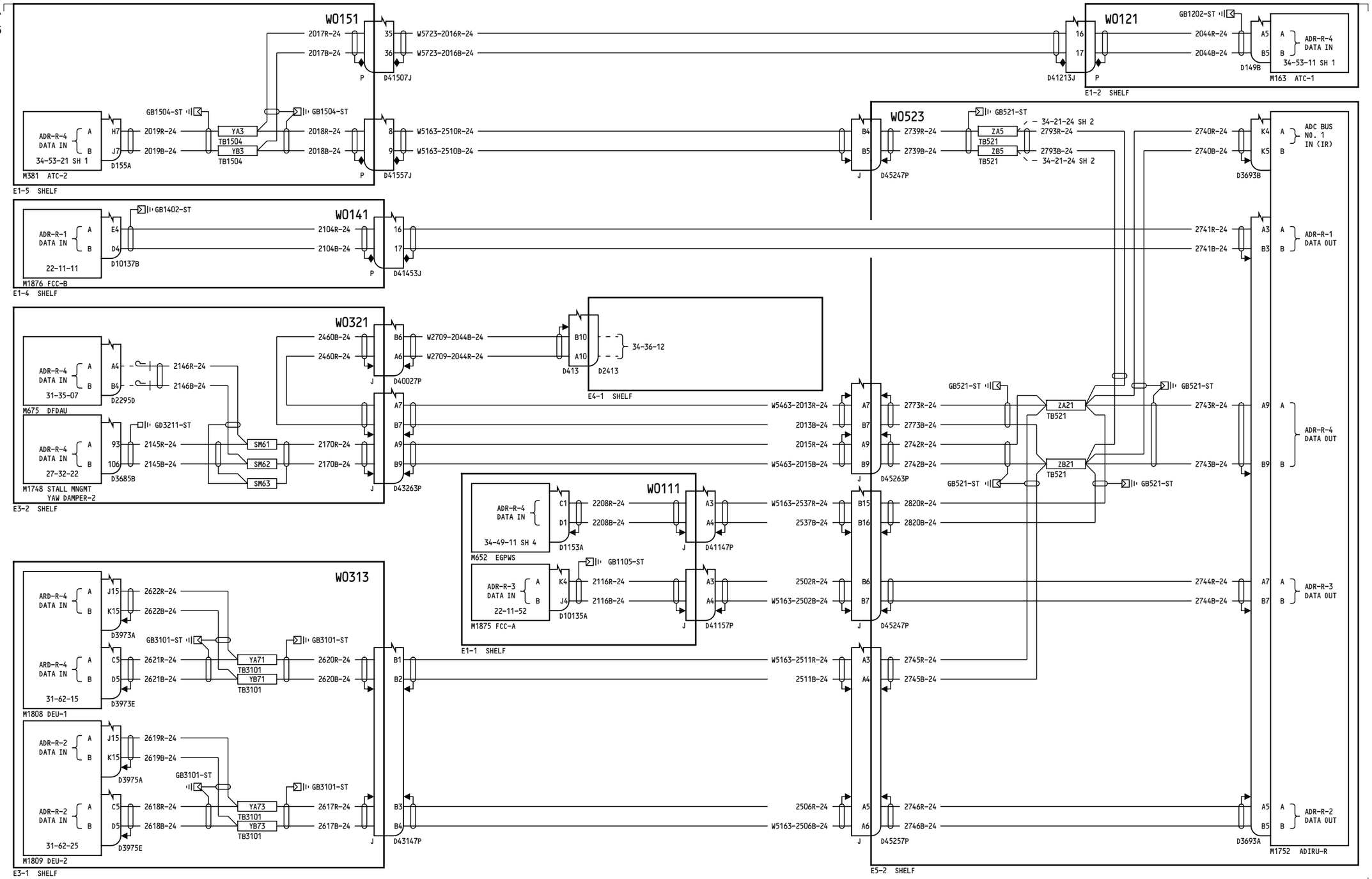

YT126-YT131

AIR DATA INERTIAL REFERENCE SYSTEM (ADIRS) - RIGHT ADR OUTPUTS

D280A351

34-21-24

Page 4
Sheet 1
Dec 10/2015

BOEING PROPRIETARY - Copyright © - Unpublished Work - See title page for details.

81

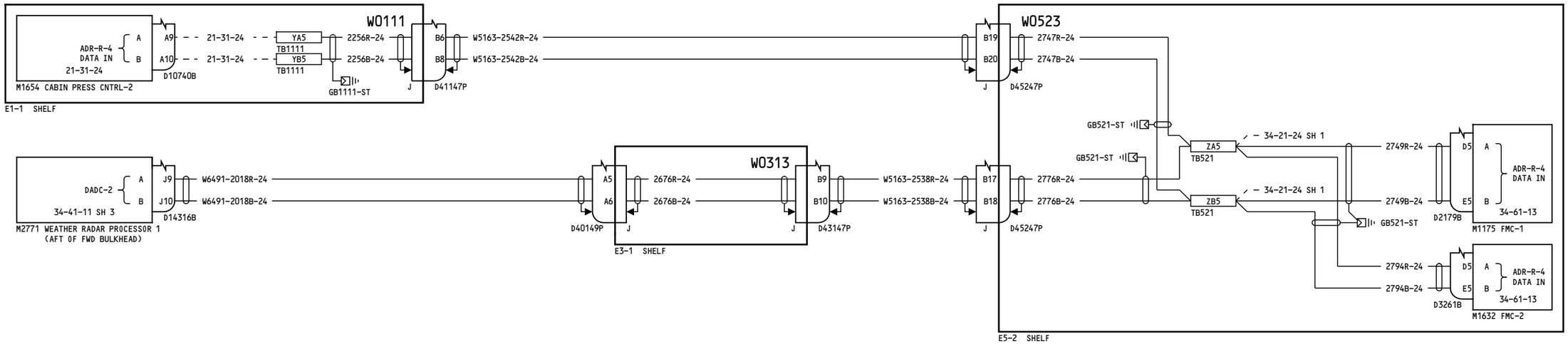

YT126-YT131

AIR DATA INERTIAL REFERENCE SYSTEM (ADIRS) - RIGHT ADR OUTPUTS

D280A351

BOEING PROPRIETARY - Copyright © - Unpublished Work - See title page for details.

34-21-24

Page 4
Sheet 2
Dec 10/2015

63

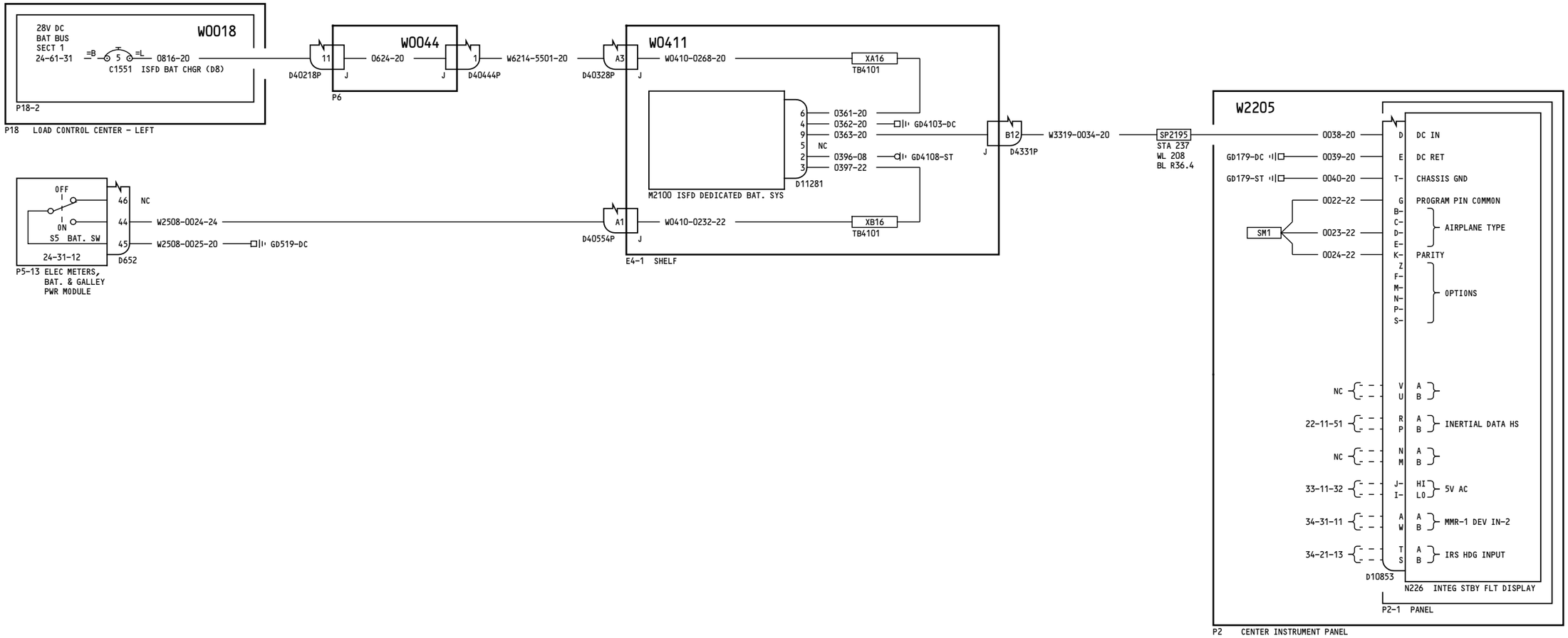

BOEING PROPRIETARY - Copyright © - Unpublished Work - See title page for details.

34-24-15

Page 1

Jun 21/2016

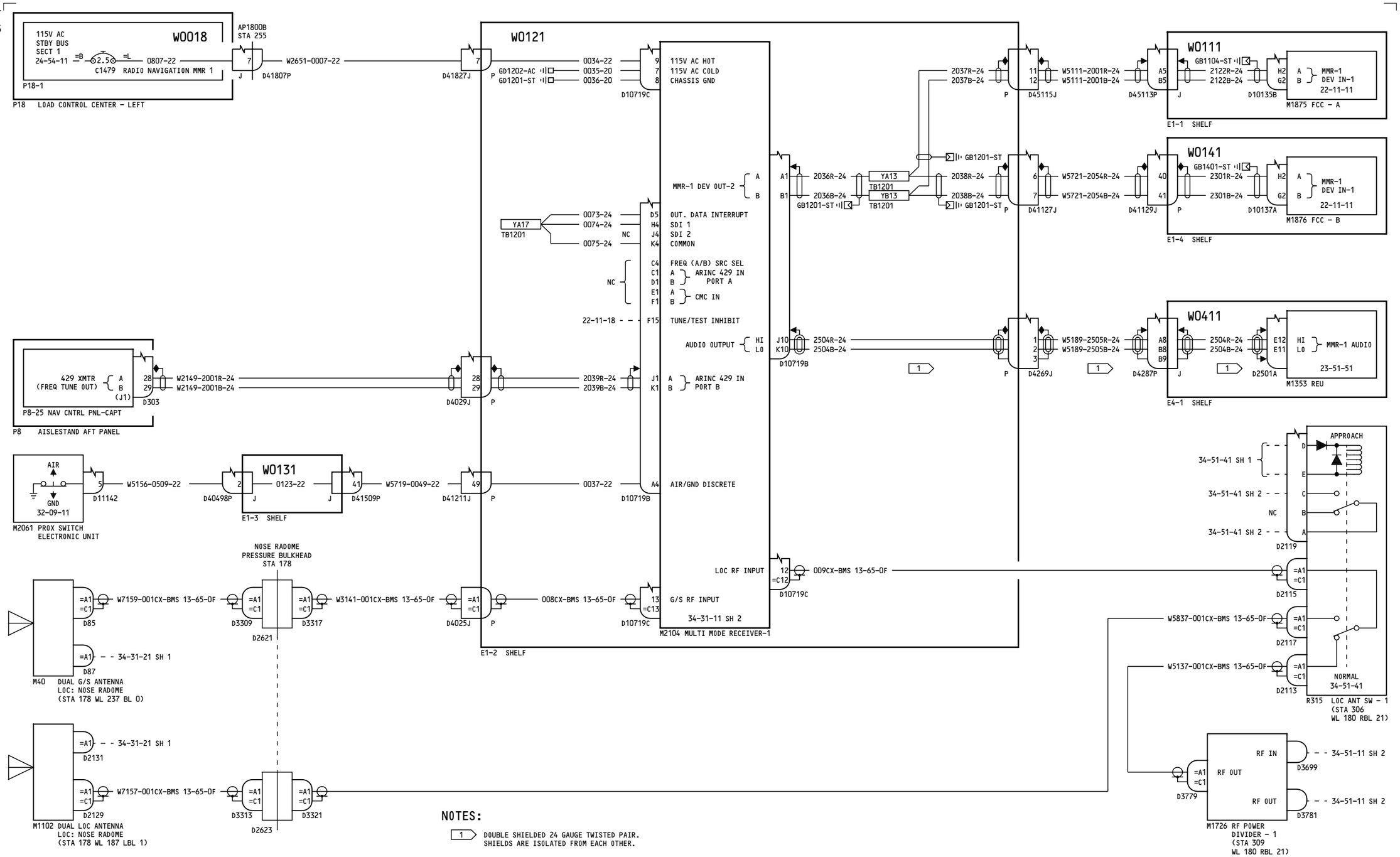

YT101-YT119, YT126-YT129	MMR - ILS NO. 1
	D280A351

BOEING PROPRIETARY - Copyright © - Unpublished Work - See title page for details.

34-31-11
Page 1
Sheet 1
Jun 21/2016

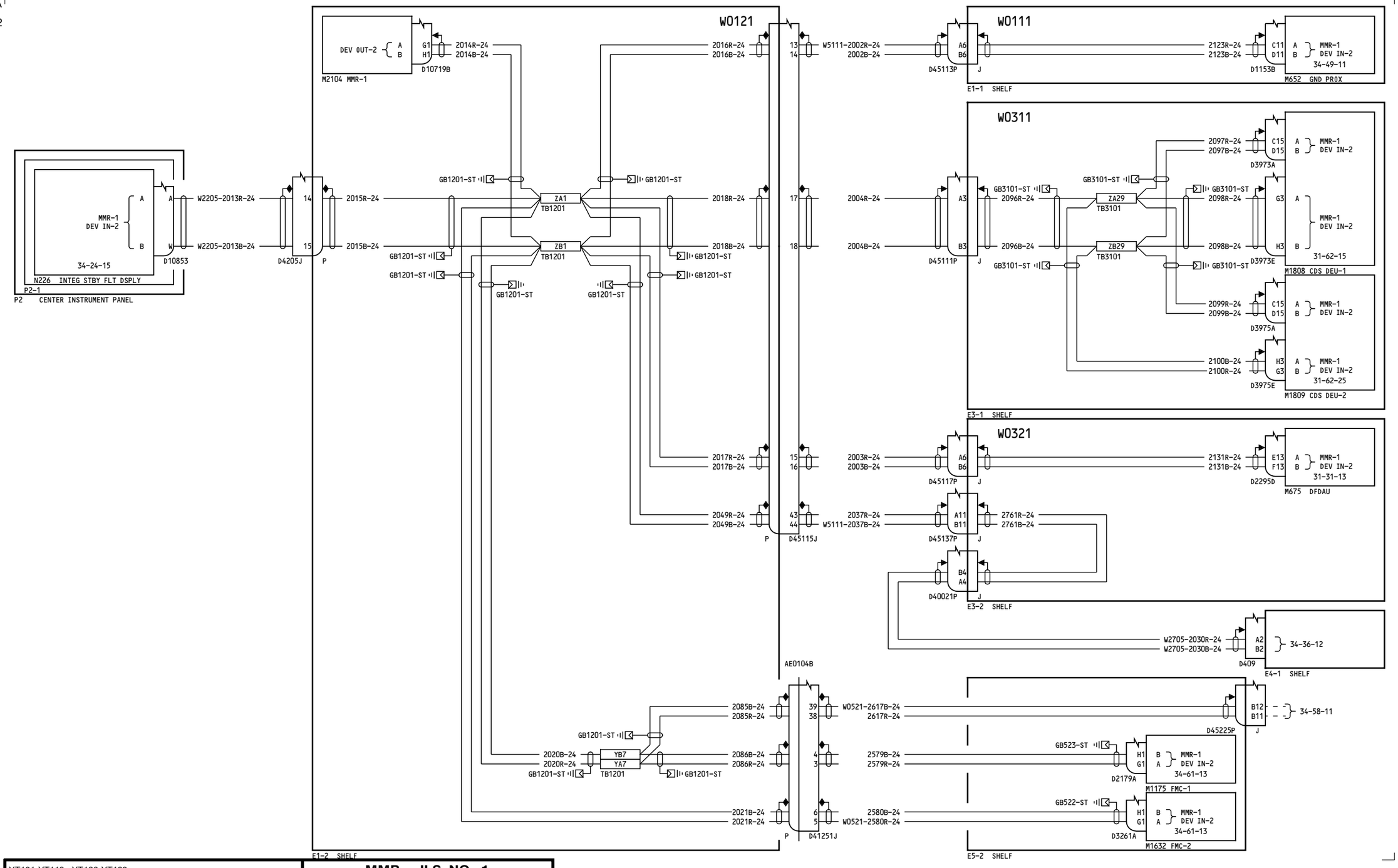

YT101-YT119, YT126-YT129

MMR - ILS NO. 1

D280A351

34-31-11

Page 1
Sheet 2
Jun 21/2016

BOEING PROPRIETARY - Copyright © - Unpublished Work - See title page for details.

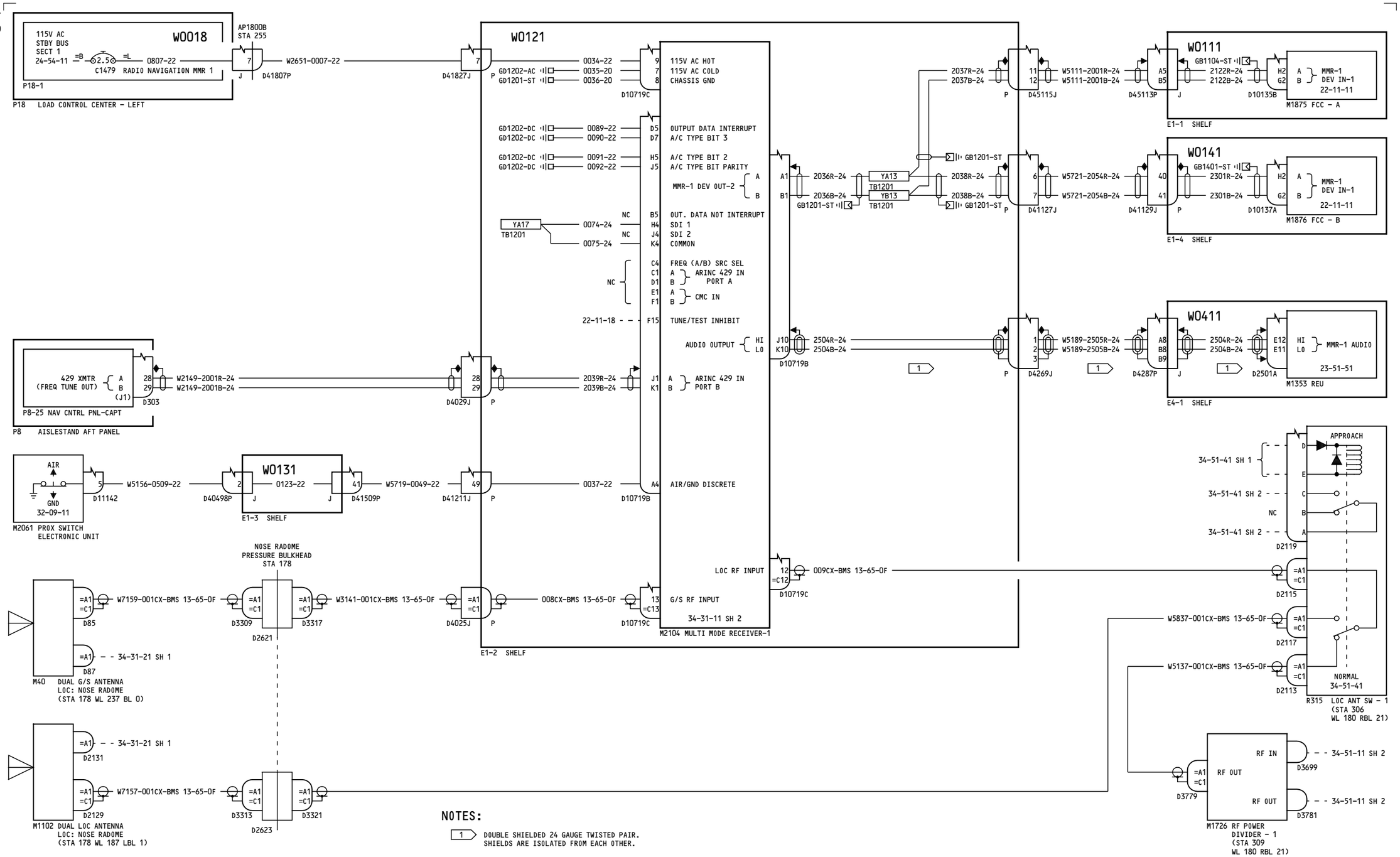

YT120, YT130-YT133	MMR - ILS NO. 1
	D280A351

BOEING PROPRIETARY - Copyright © - Unpublished Work - See title page for details.

34-31-11
Page 2
Sheet 1
Jun 21/2016

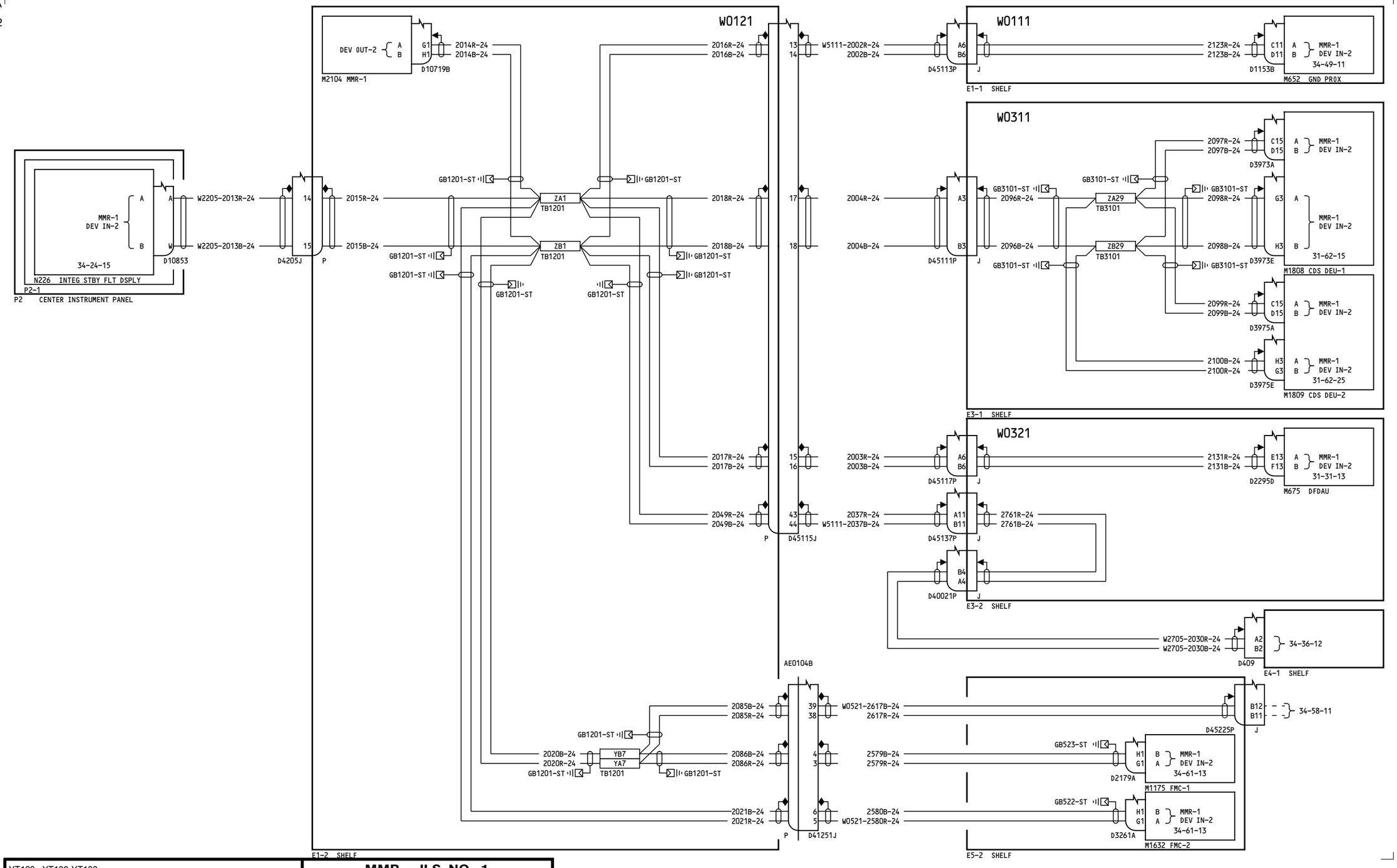

YT120, YT130-YT133

MMR - ILS NO. 1

D280A351

34-31-11

Page 2
Sheet 2
Jun 21/2016

BOEING PROPRIETARY - Copyright © - Unpublished Work - See title page for details.

7

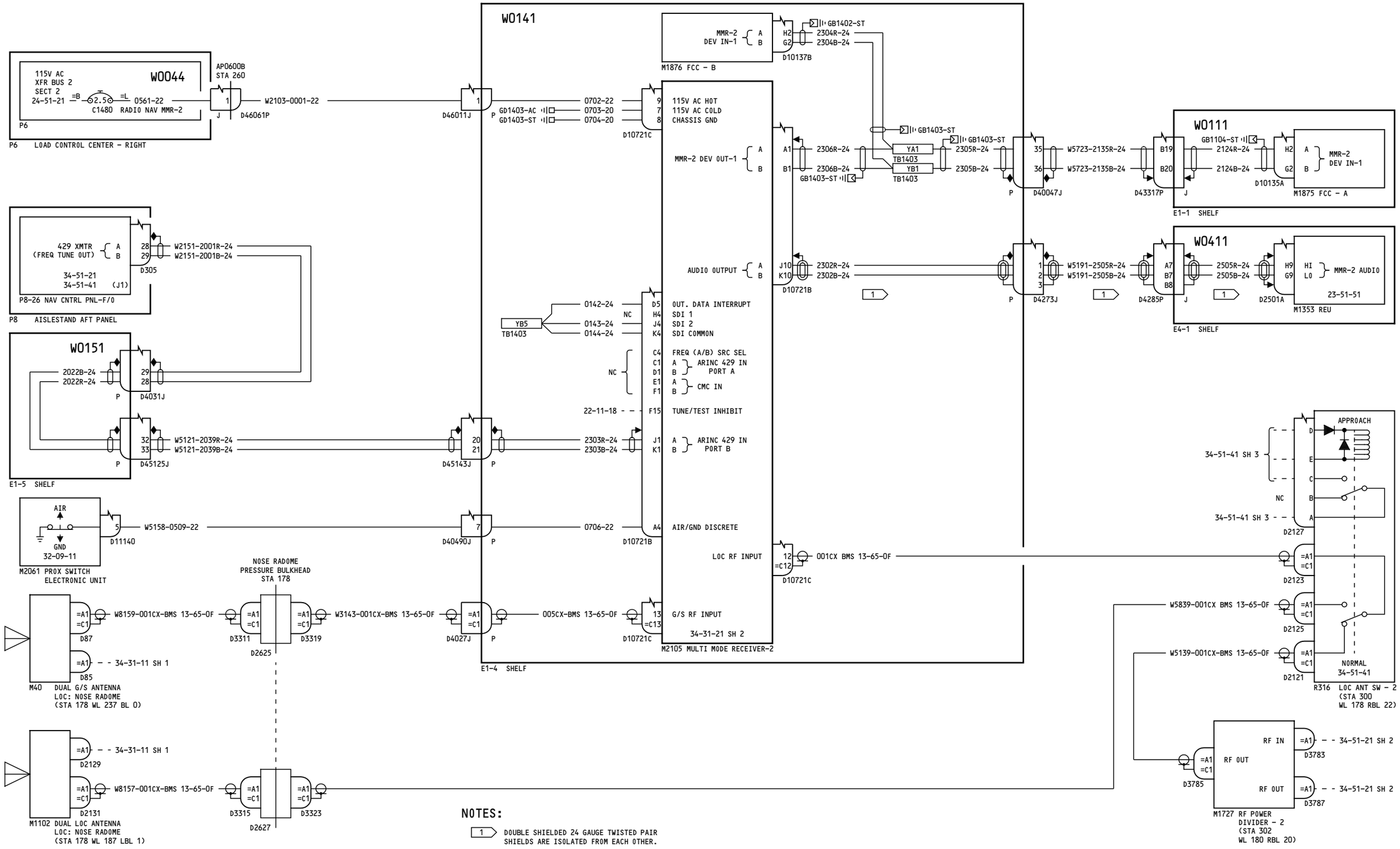

NOTES:

1 DOUBLE SHIELDED 24 GAUGE TWISTED PAIR SHIELDS ARE ISOLATED FROM EACH OTHER.

YT101-YT119, YT126-YT129	MMR - ILS NO. 2
	D280A351

34-31-21
Page 1
Sheet 1
Jun 21/2016

BOEING PROPRIETARY - Copyright © - Unpublished Work - See title page for details.

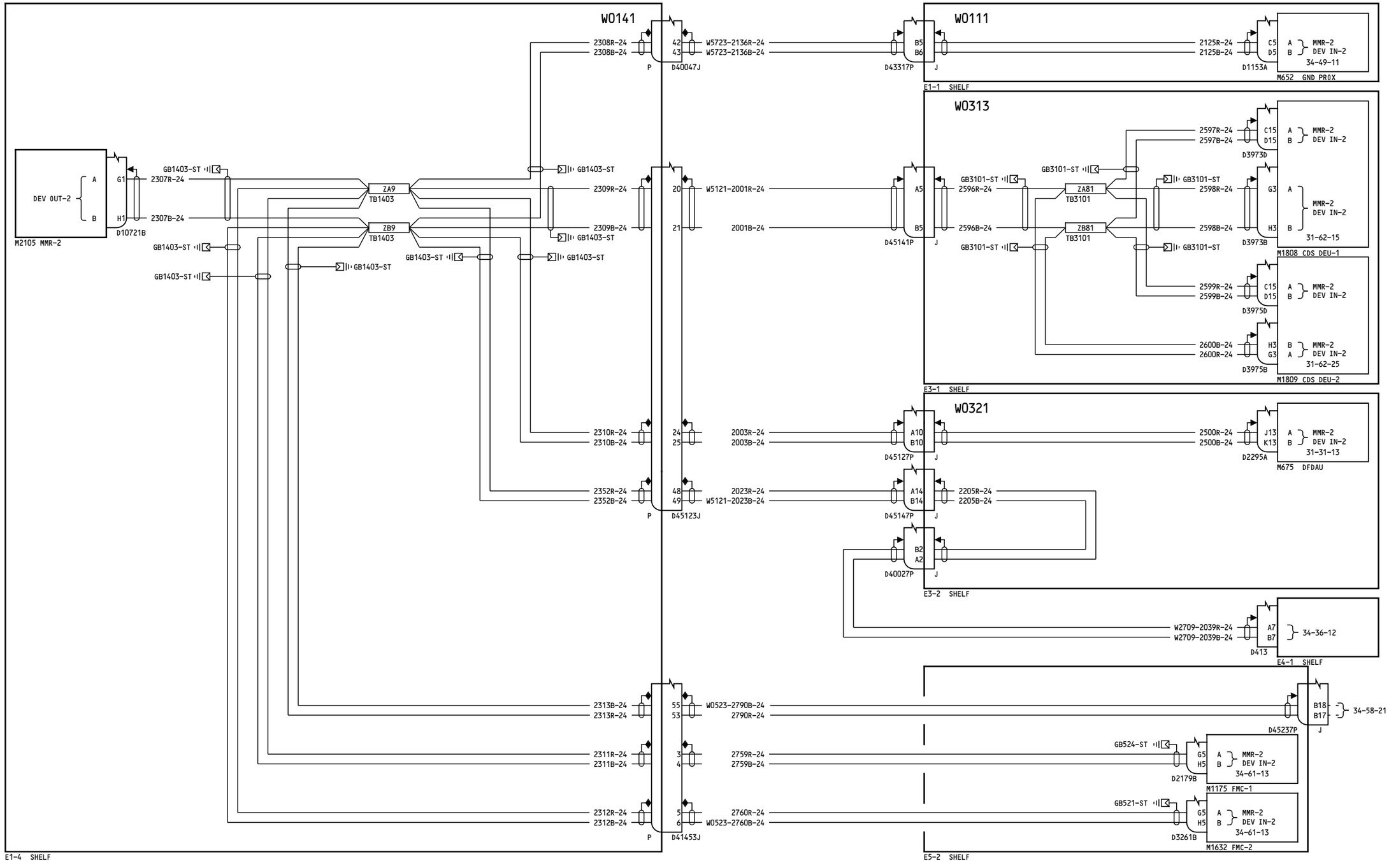

YT101-YT119, YT126-YT129

MMR - ILS NO. 2

D280A351

34-31-21

Page 1
Sheet 2
Jun 21/2016

BOEING PROPRIETARY - Copyright © - Unpublished Work - See title page for details.

-B
11

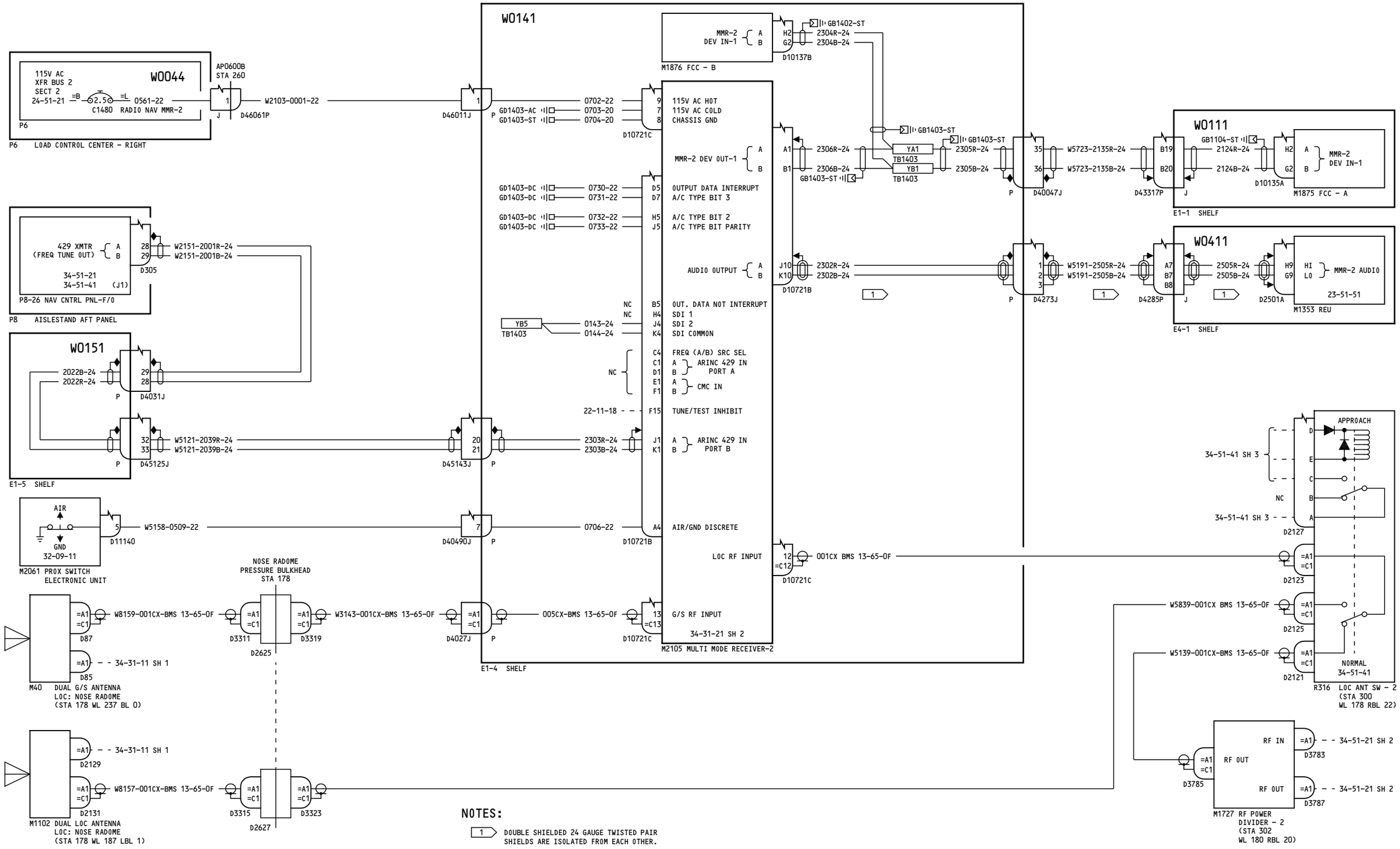

NOTES:

1. DOUBLE SHIELDED 24 GAUGE TWISTED PAIR SHIELDS ARE ISOLATED FROM EACH OTHER.

YT120, YT130-YT133	MMR - ILS NO. 2
	D280A351

34-31-21
Page 2
Sheet 1
Jun 21/2016

BOEING PROPRIETARY - Copyright © - Unpublished Work - See title page for details.

51

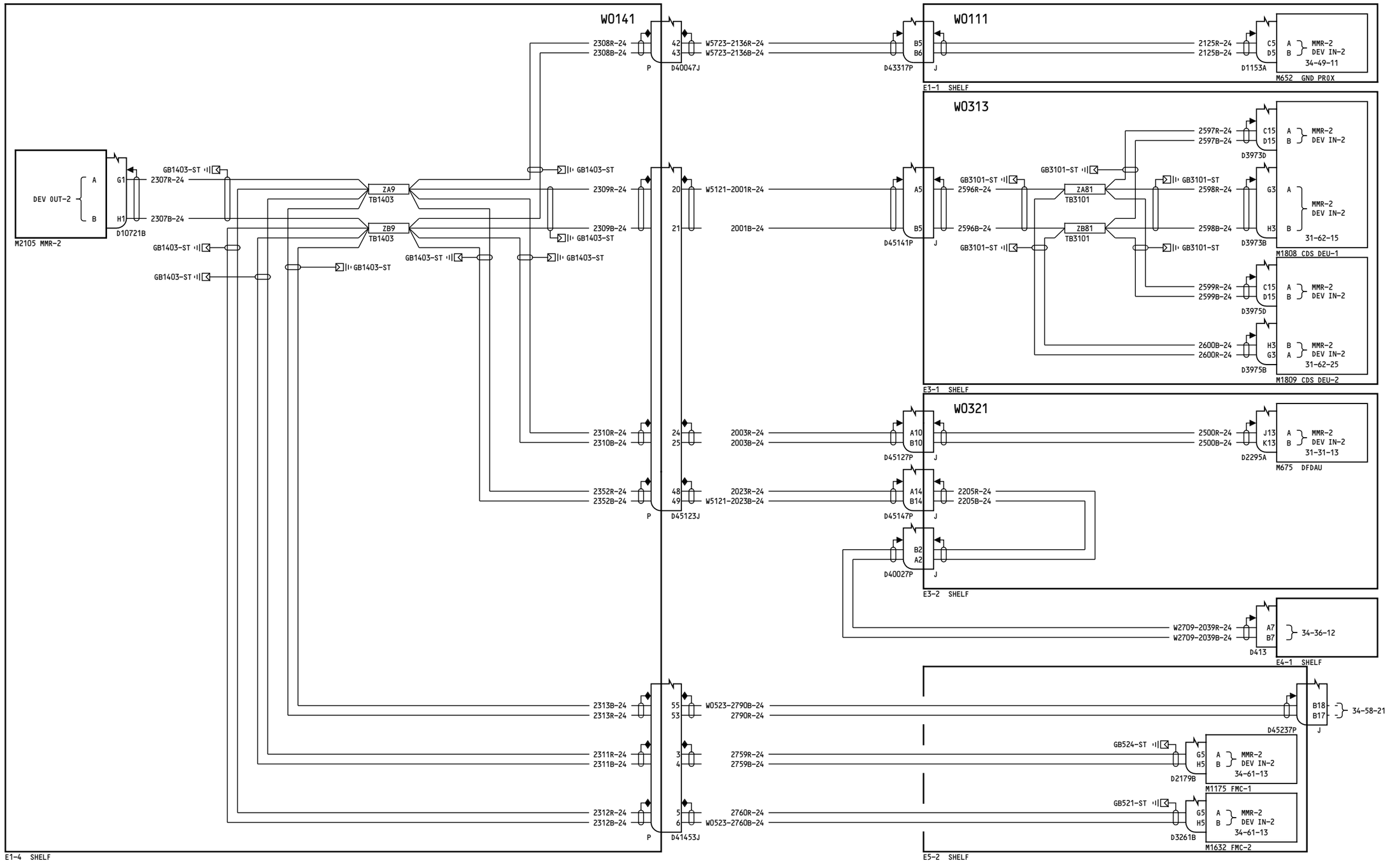

YT120, YT130-YT133

MMR - ILS NO. 2

D280A351

34-31-21

Page 2
Sheet 2
Jun 21/2016

34-31-21

Page 2
Sheet 2
Jun 21/2016

BOEING PROPRIETARY - Copyright © - Unpublished Work - See title page for details.

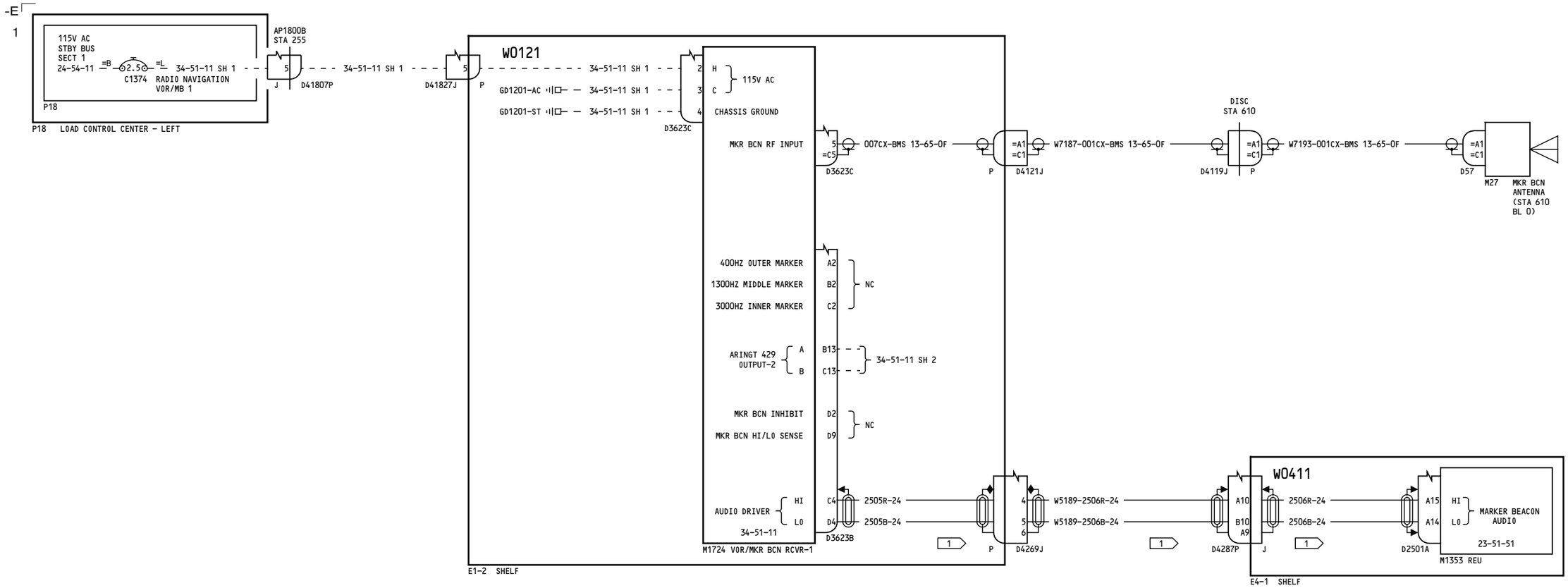

NOTES:

1 DOUBLE SHIELDED 24 GAUGE TWISTED PAIR.
SHIELDS ARE ISOLATED FROM EACH OTHER.

BOEING PROPRIETARY - Copyright © - Unpublished Work - See title page for details.

34-32-11

Page 1

Jun 21/2016

-A
28

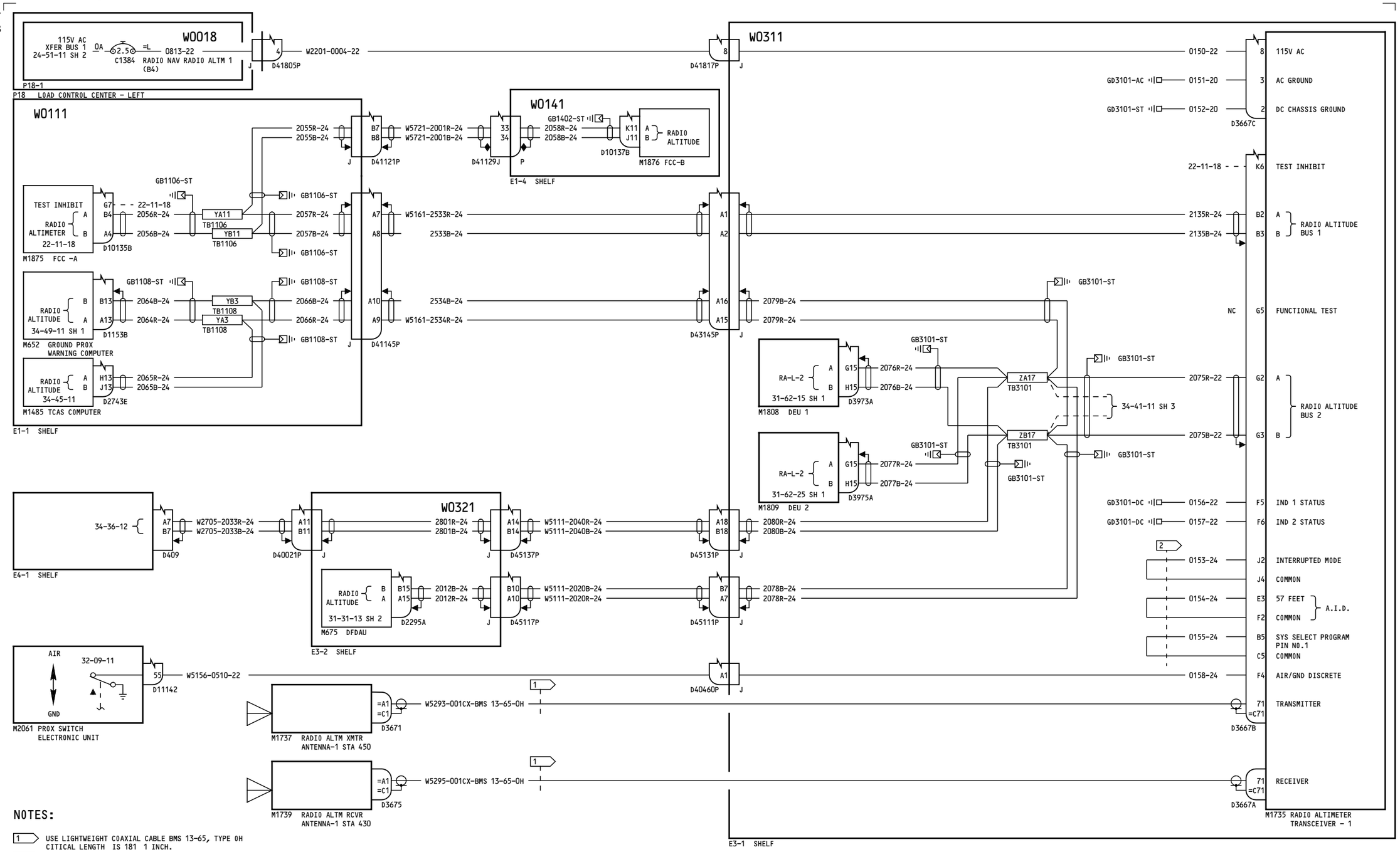

NOTES:

1. USE LIGHTWEIGHT COAXIAL CABLE BMS 13-65, TYPE OH CITICAL LENGTH IS 181 1 INCH.
2. JUMPER LENGTH IS 3 INCHES MAXIMUM.

ALL	RADIO ALTIMETER SYSTEM -1
	D280A351

34-33-11
Page 1
Jun 21/2016

BOEING PROPRIETARY - Copyright © - Unpublished Work - See title page for details.

-A
28

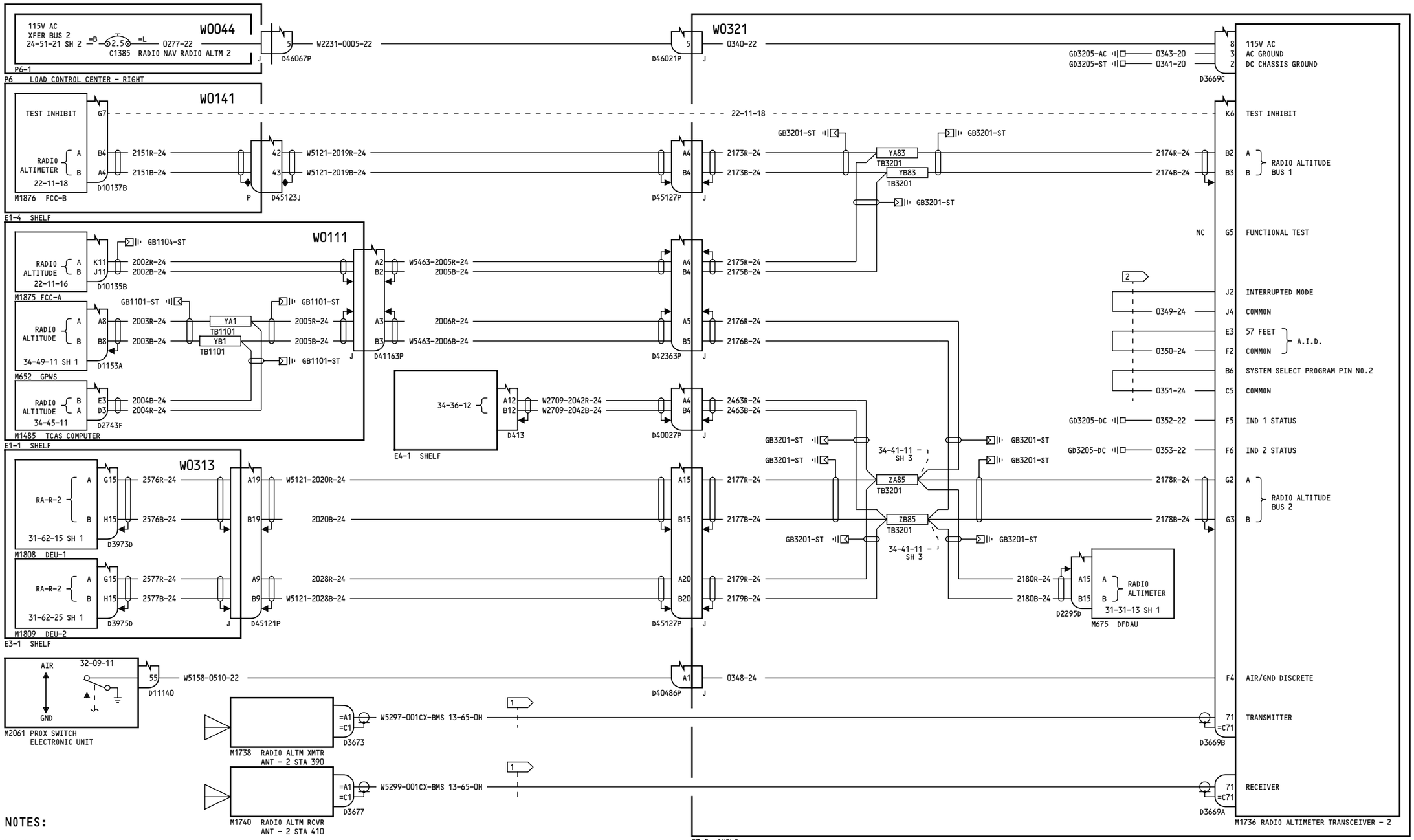

NOTES:

1. USE LIGHTWEIGHT COAXIAL CABLE BMS 13-65, TYPE OH CITICAL LENGTH IS 181 1 INCH.
2. JUMPER LENGTH IS 3 INCHES MAXIMUM.

YT101-YT103	RADIO ALTIMETER SYSTEM -2
	D280A351

BOEING PROPRIETARY - Copyright © - Unpublished Work - See title page for details.

34-33-21
Page 1
Aug 15/2013

38

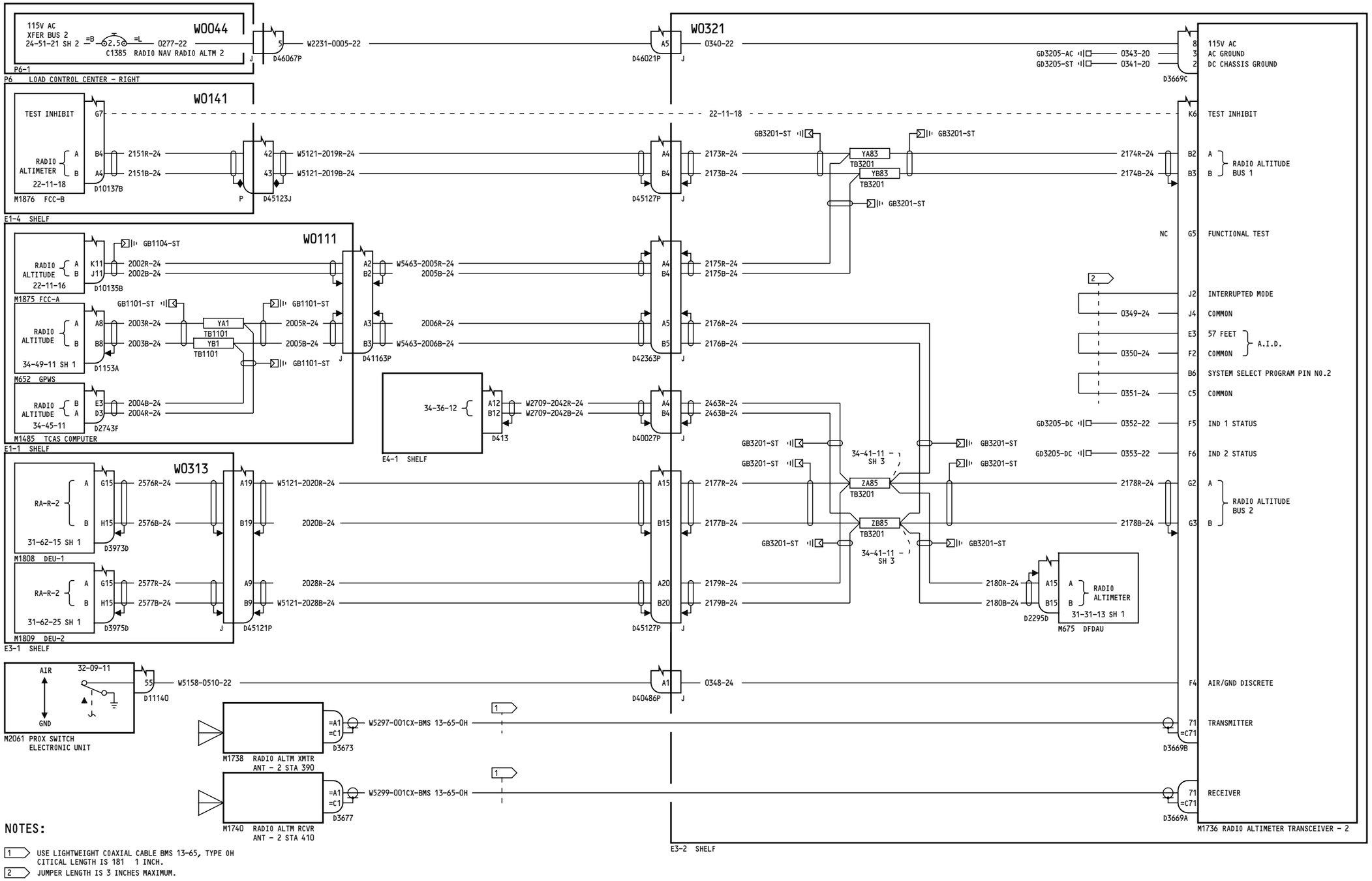

NOTES:

1. USE LIGHTWEIGHT COAXIAL CABLE BMS 13-65, TYPE OH CITICAL LENGTH IS 181 1 INCH.
2. JUMPER LENGTH IS 3 INCHES MAXIMUM.

BOEING PROPRIETARY - Copyright © - Unpublished Work - See title page for details.

34-33-21

Page 2

Jun 21/2016

-A
74

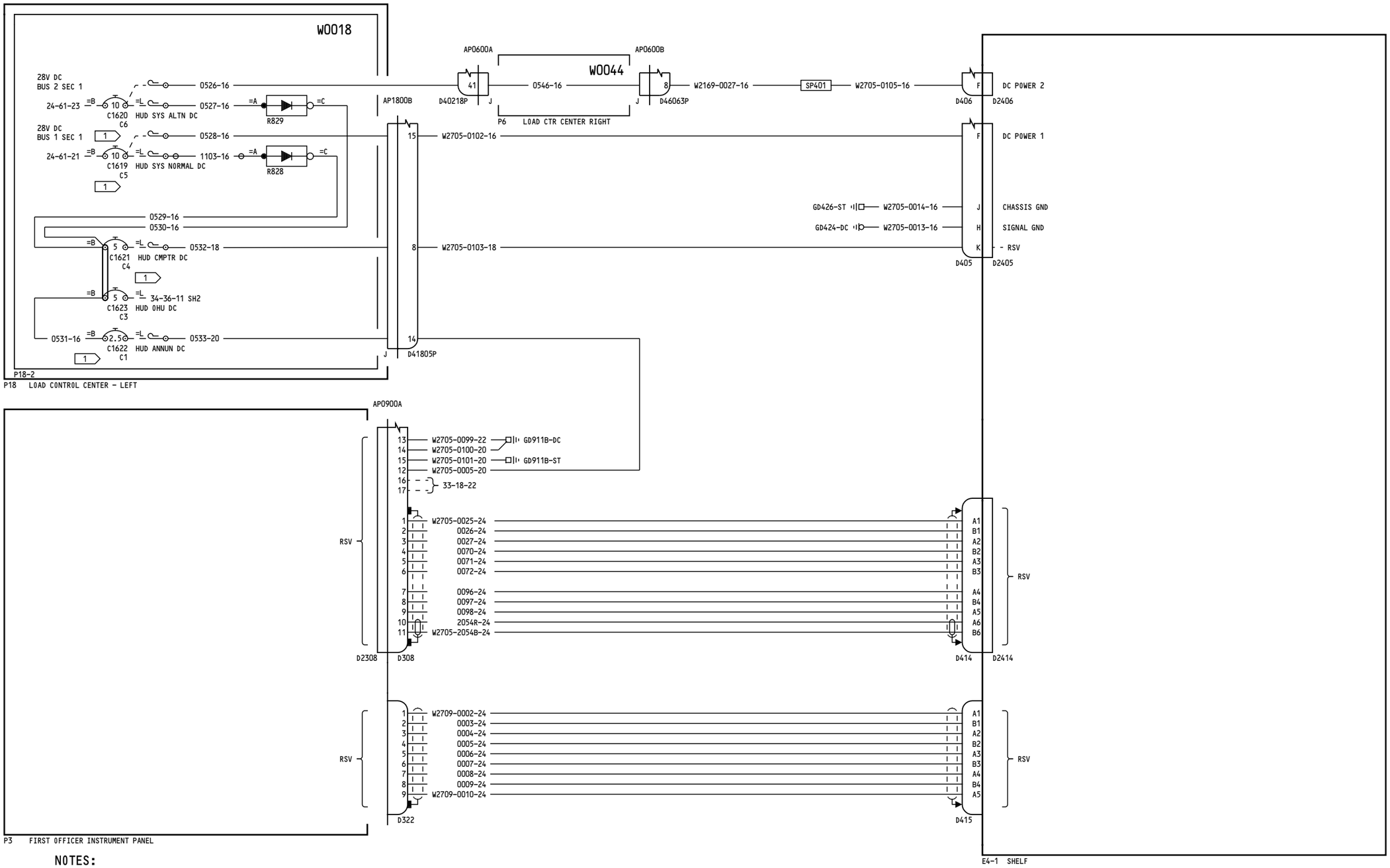

NOTES:

1 CIRCUIT BREAKER IS COLLARD AND LABEL "INOP"
WIRE IS CAPPED AND STOWED

ALL	HEADS UP DISPLAY POWER AND ANNUNCIATION D280A351

34-36-11
Page 1
Sheet 1
Jun 21/2016

BOEING PROPRIETARY - Copyright © - Unpublished Work - See title page for details.

70

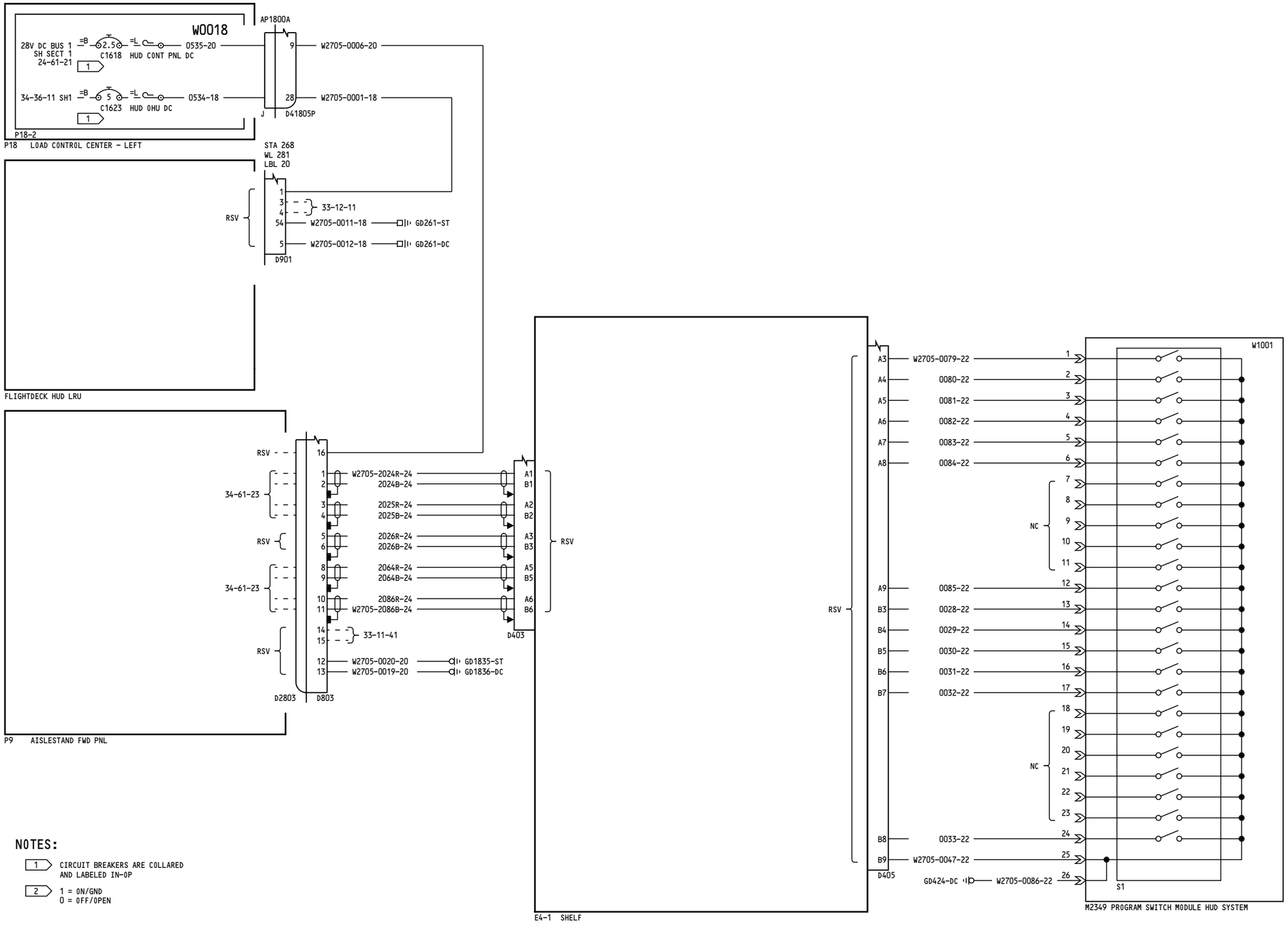

2

M2349	
SWITCH NO.	SWITCH POSITION
1	0
2	0
3	0
4	0
5	0
6	0
7	0
8	0
9	0
10	0
11	0
12	0
13	0
14	0
15	0
16	0
17	0
18	0
19	0
20	0
21	0
22	0
23	0
24	0

NOTES:

1. CIRCUIT BREAKERS ARE COLLARED AND LABELED IN-OP
2. 1 = ON/GND
   0 = OFF/OPEN

ALL

HEADS UP DISPLAY POWER AND ANNUNCIATION

D280A351

34-36-11
Page 1
Sheet 2
Jun 21/2016

BOEING PROPRIETARY - Copyright © - Unpublished Work - See title page for details.

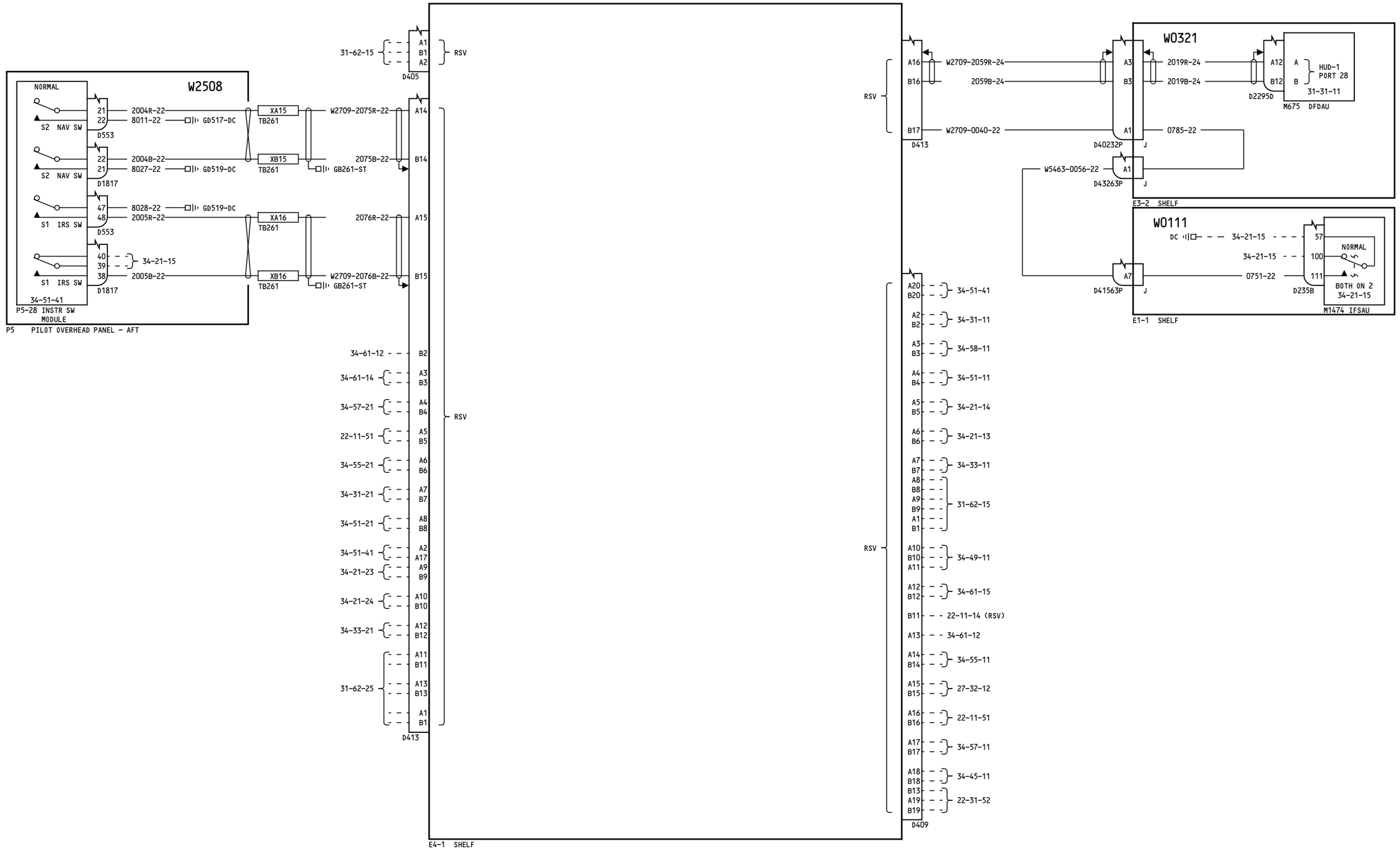

BOEING PROPRIETARY - Copyright © - Unpublished Work - See title page for details.
34-36-12
Page 1
Jun 21/2016

-A
10

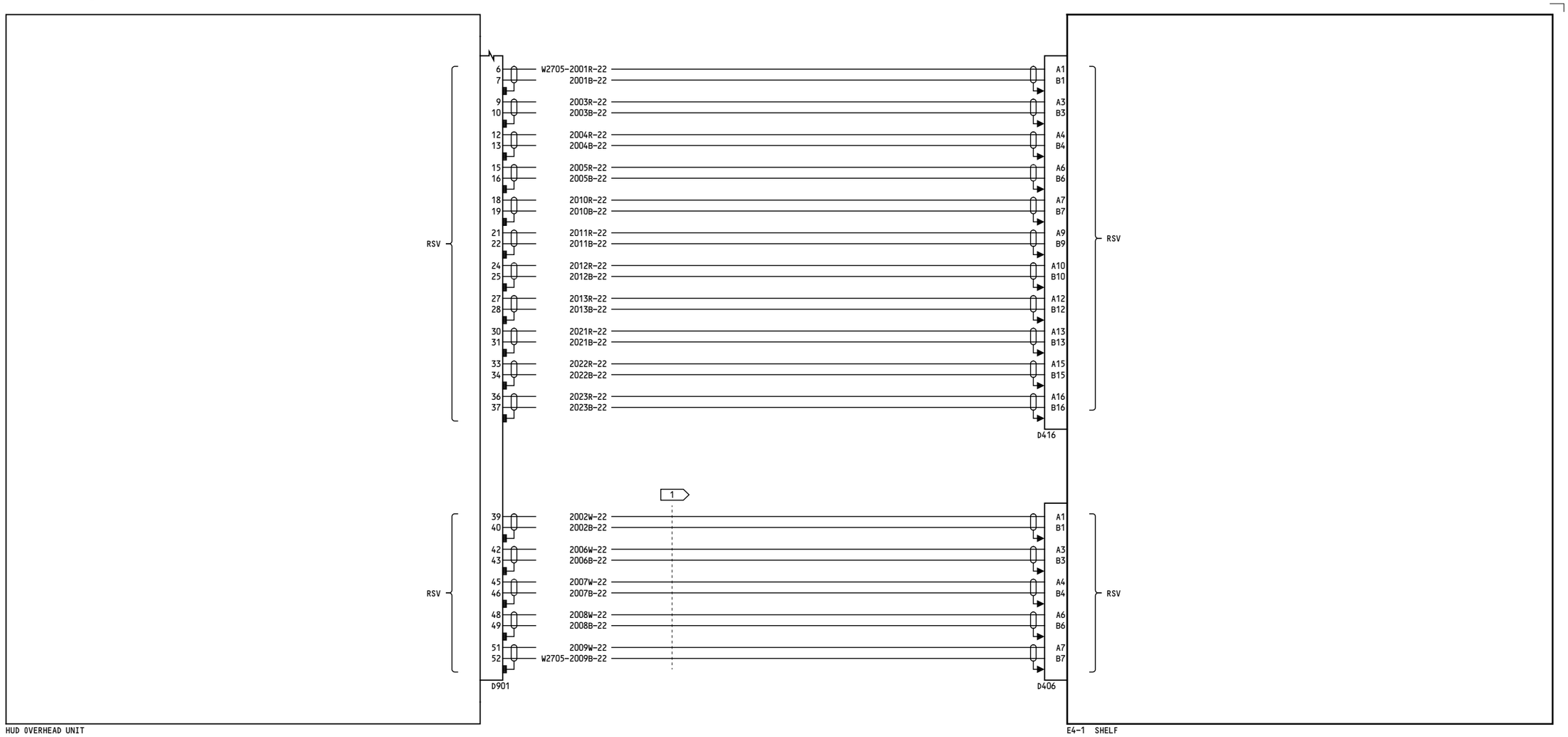

NOTES:

1 RAYCHEM SPEC 55 CABLE.

ALL	HEAD UP DISPLAY SYSTEM INTERCONNECTS D280A351	34-36-13 Page 1 Jun 21/2016

34-36-13
Page 1
Jun 21/2016

BOEING PROPRIETARY - Copyright © - Unpublished Work - See title page for details.

-B
2

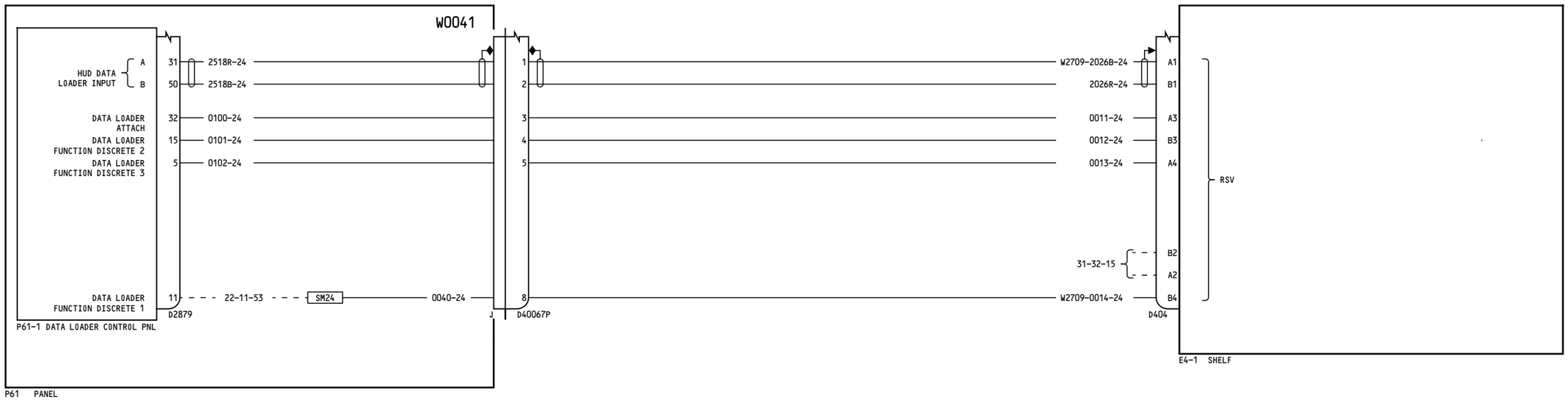

ALL	HEAD UP DISPLAY ON-BOARD DATA LOADER INTERFACES D280A351

BOEING PROPRIETARY - Copyright © - Unpublished Work - See title page for details.

34-36-14
Page 1
Jun 21/2016

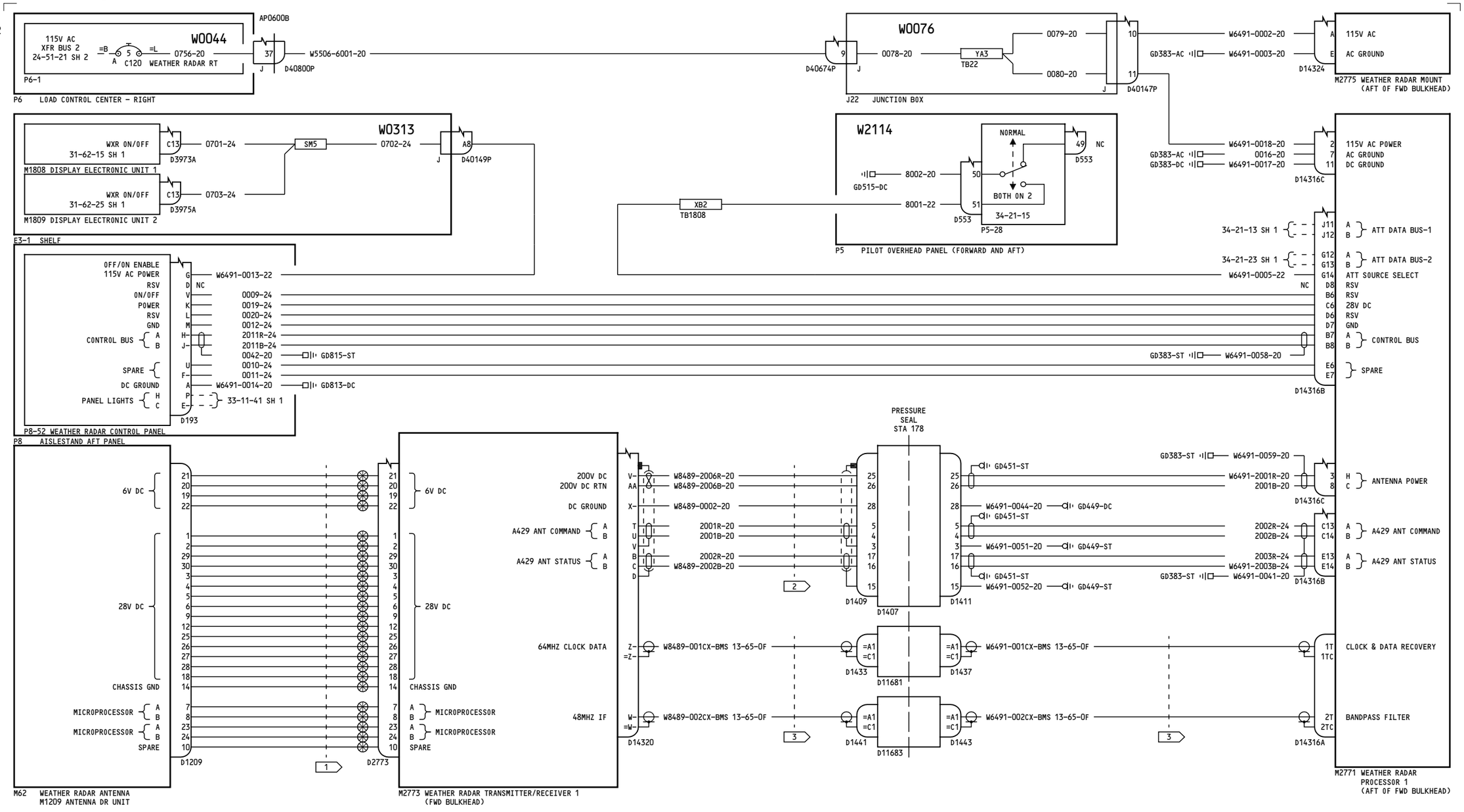

NOTES:

1. W8487 VENDOR WIRING
2. BRAID BACC3108-3,-5
3. BMS 13-65 TYPE OF, M17/128-RG400 OR EQUIVALENT COAXCIAL CABLE.

YT101-YT102	WEATHER RADAR
	D280A351

34-41-11
Page 1
Sheet 1
Nov 18/2013

BOEING PROPRIETARY - Copyright © - Unpublished Work - See title page for details.

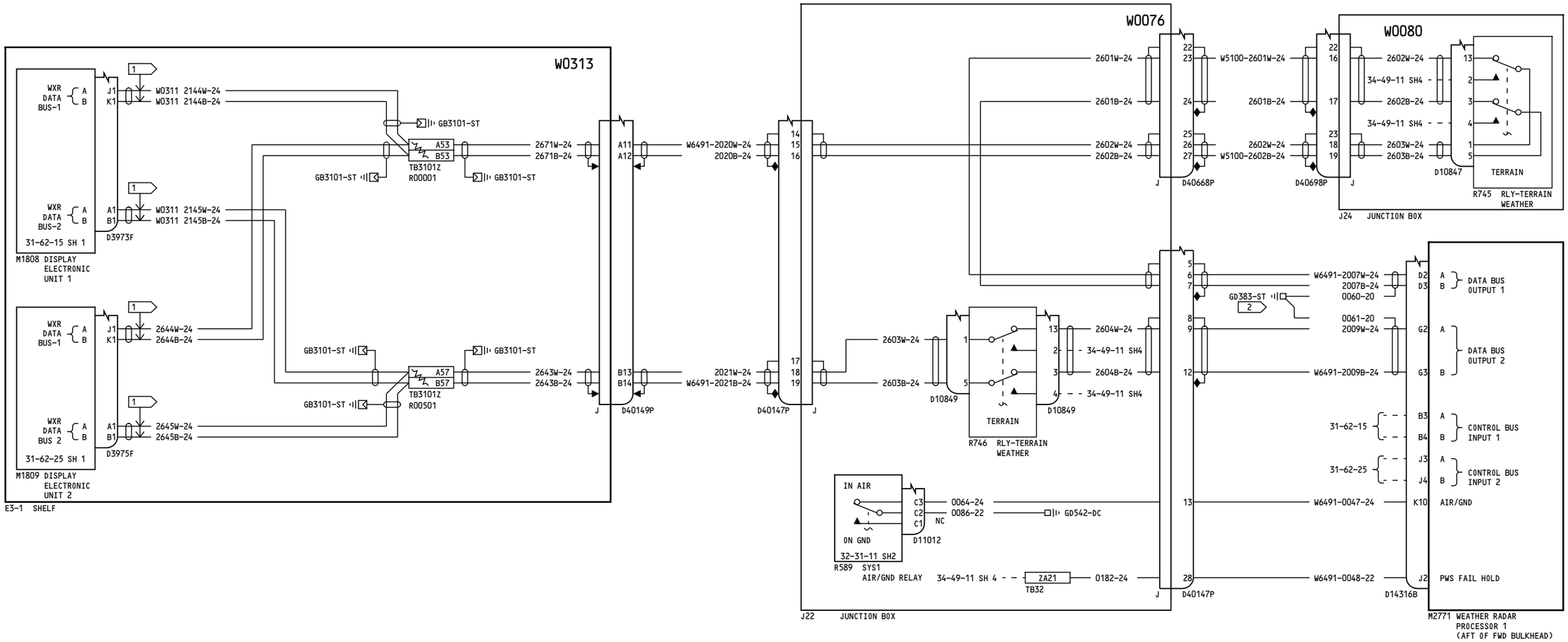

NOTES:

1. STUB LINE 6 INCHES 70 OHMS.
2. GROUND WIRE LESS THAN OR EQUAL TO 18 INCHES.

YT101-YT102	WEATHER RADAR
	D280A351

BOEING PROPRIETARY - Copyright © - Unpublished Work - See title page for details.

34-41-11
Page 1
Sheet 2
Nov 18/2013

-A
69

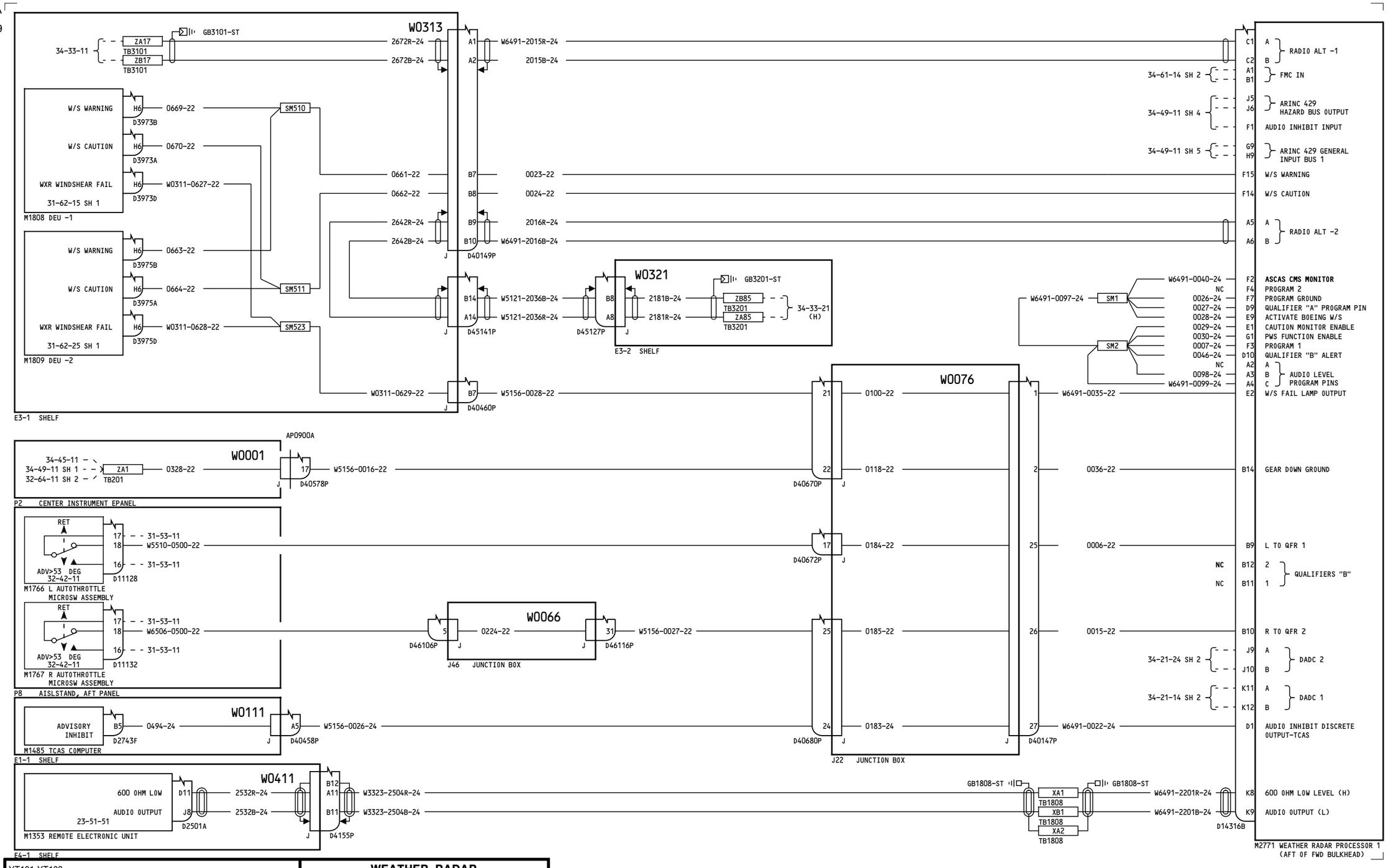

YT101-YT102

WEATHER RADAR

D280A351

34-41-11

Page 1
Sheet 3
Nov 18/2013

BOEING PROPRIETARY - Copyright © - Unpublished Work - See title page for details.

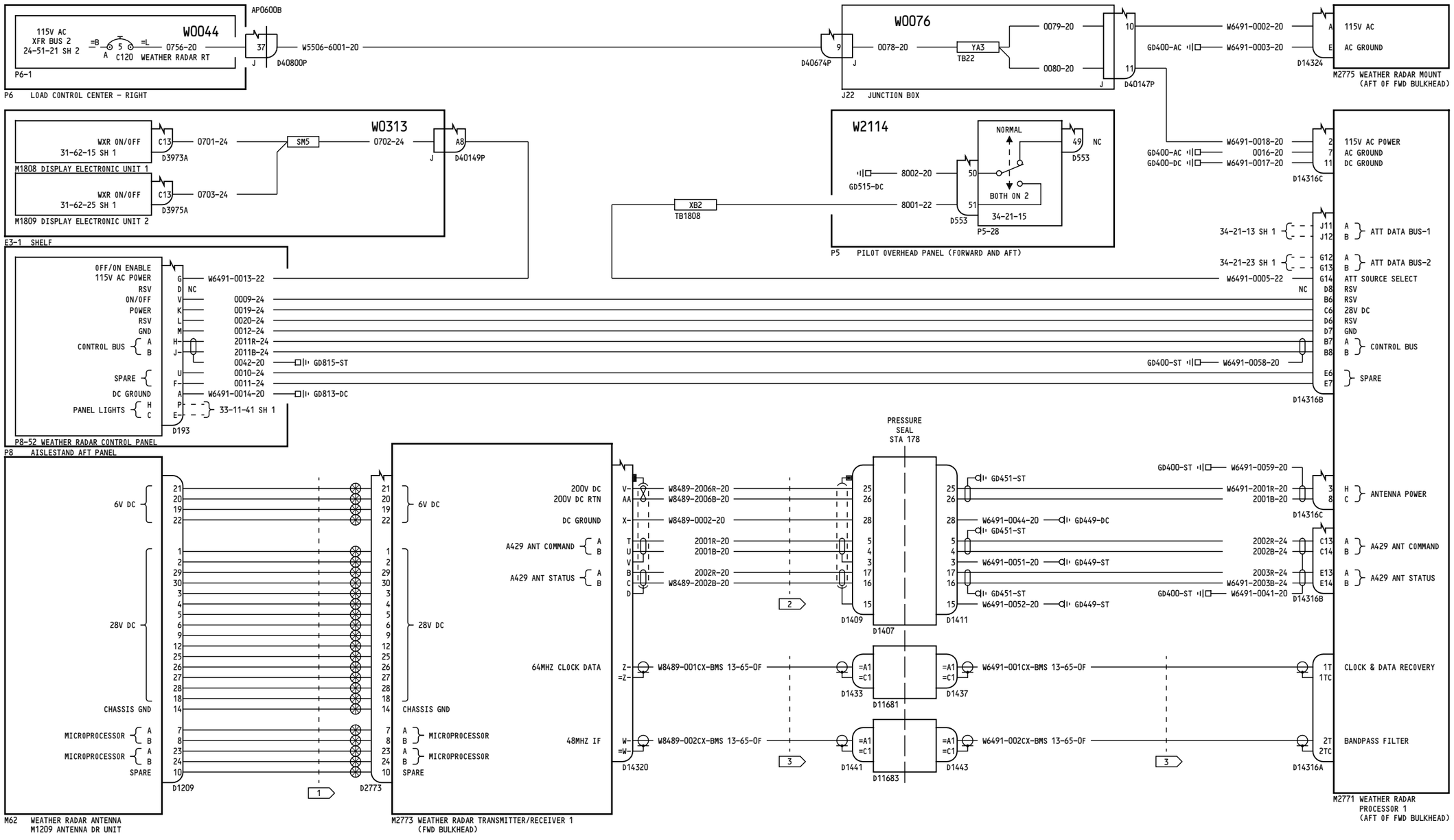

NOTES:

1. W8487 VENDOR WIRING
2. BRAID BACC3108-3,-5
3. BMS 13-65 TYPE OF, M17/128-RG400 OR EQUIVALENT COAXCIAL CABLE.

YT103	WEATHER RADAR
	D280A351

BOEING PROPRIETARY - Copyright © - Unpublished Work - See title page for details.

34-41-11
Page 2
Sheet 1
Nov 18/2013

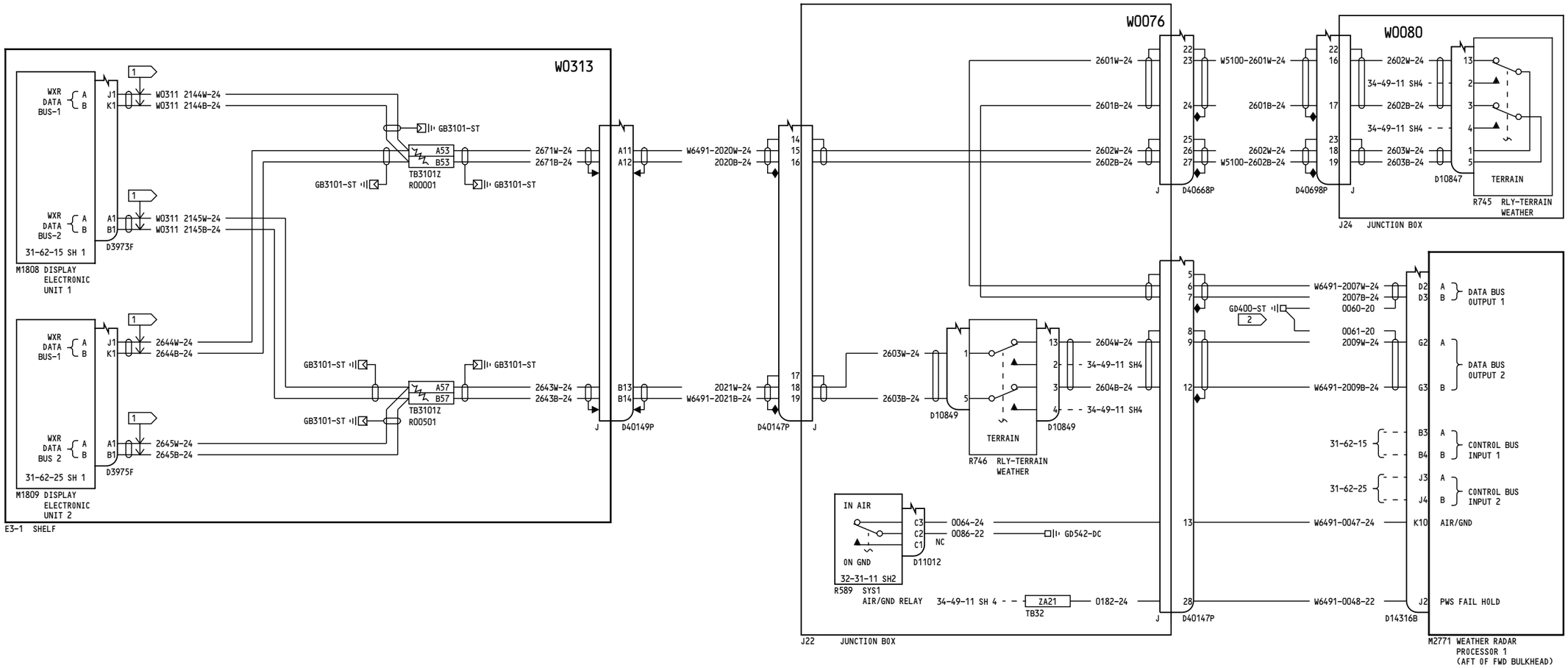

NOTES:

1. STUB LINE 6 INCHES 70 OHMS.

2. GROUND WIRE LESS THAN OR EQUAL TO 18 INCHES.

BOEING PROPRIETARY - Copyright © - Unpublished Work - See title page for details.

34-41-11

Page 2
Sheet 2
Nov 18/2013

-A
69

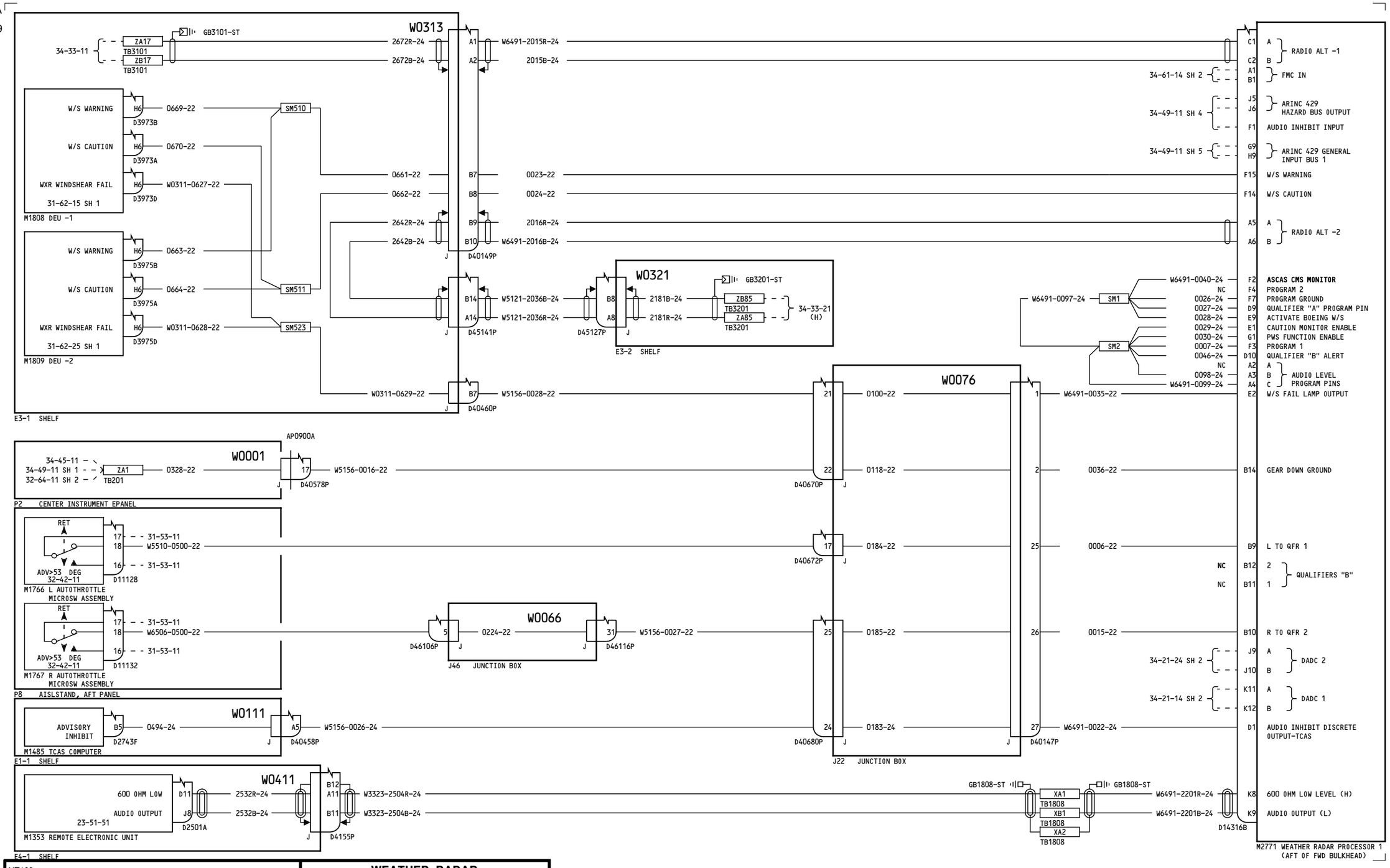

YT103

WEATHER RADAR

D280A351

34-41-11

Page 2
Sheet 3
Nov 18/2013

BOEING PROPRIETARY - Copyright © - Unpublished Work - See title page for details.

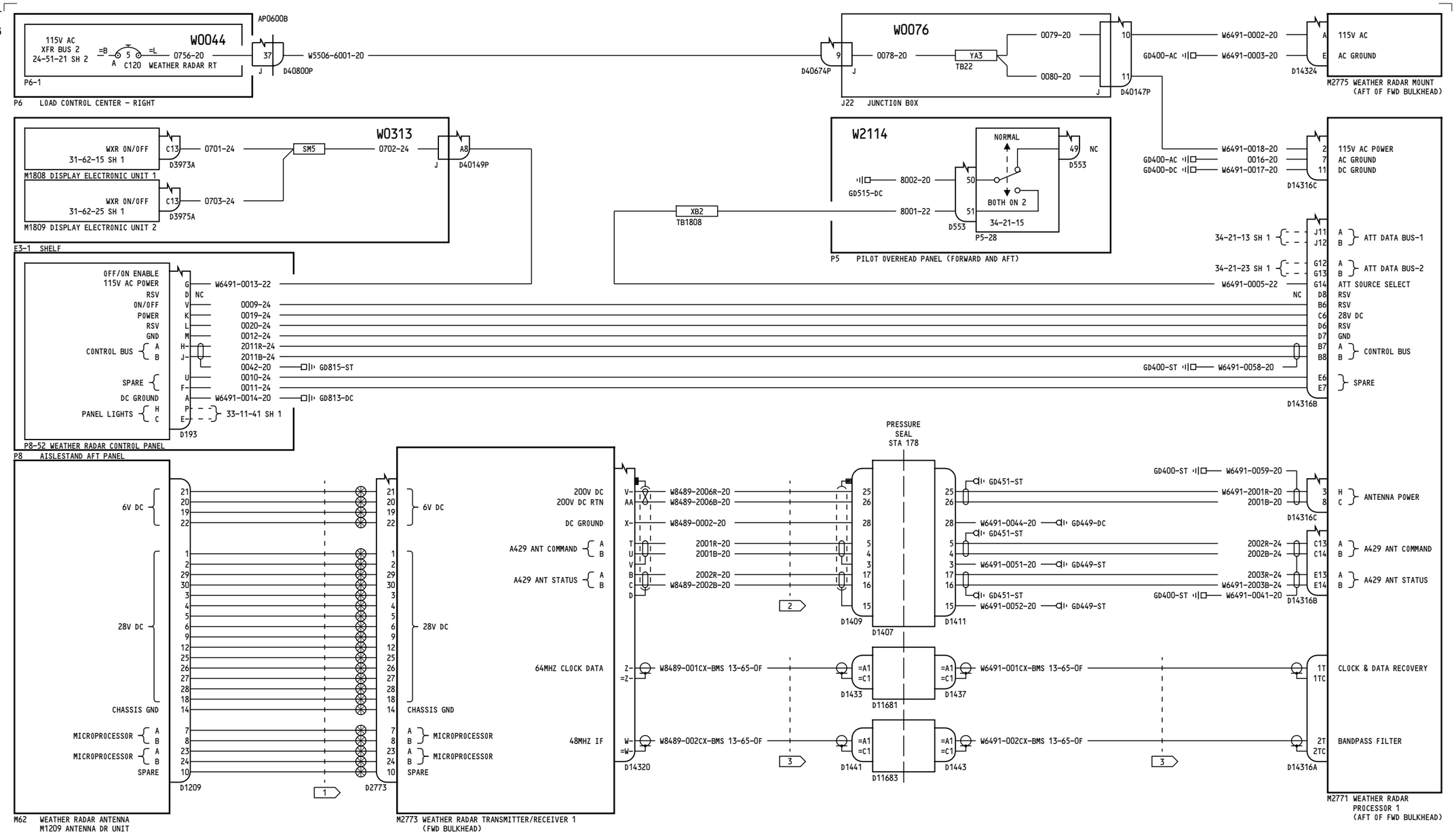

NOTES:

1. W8487 VENDOR WIRING
2. BRAID BACC3108-3,-5
3. BMS 13-65 TYPE OF, M17/128-RG400 OR EQUIVALENT COAXCIAL CABLE.

YT104-YT133	WEATHER RADAR
	D280A351

BOEING PROPRIETARY - Copyright © - Unpublished Work - See title page for details.

34-41-11
Page 3
Sheet 1
Jun 21/2016

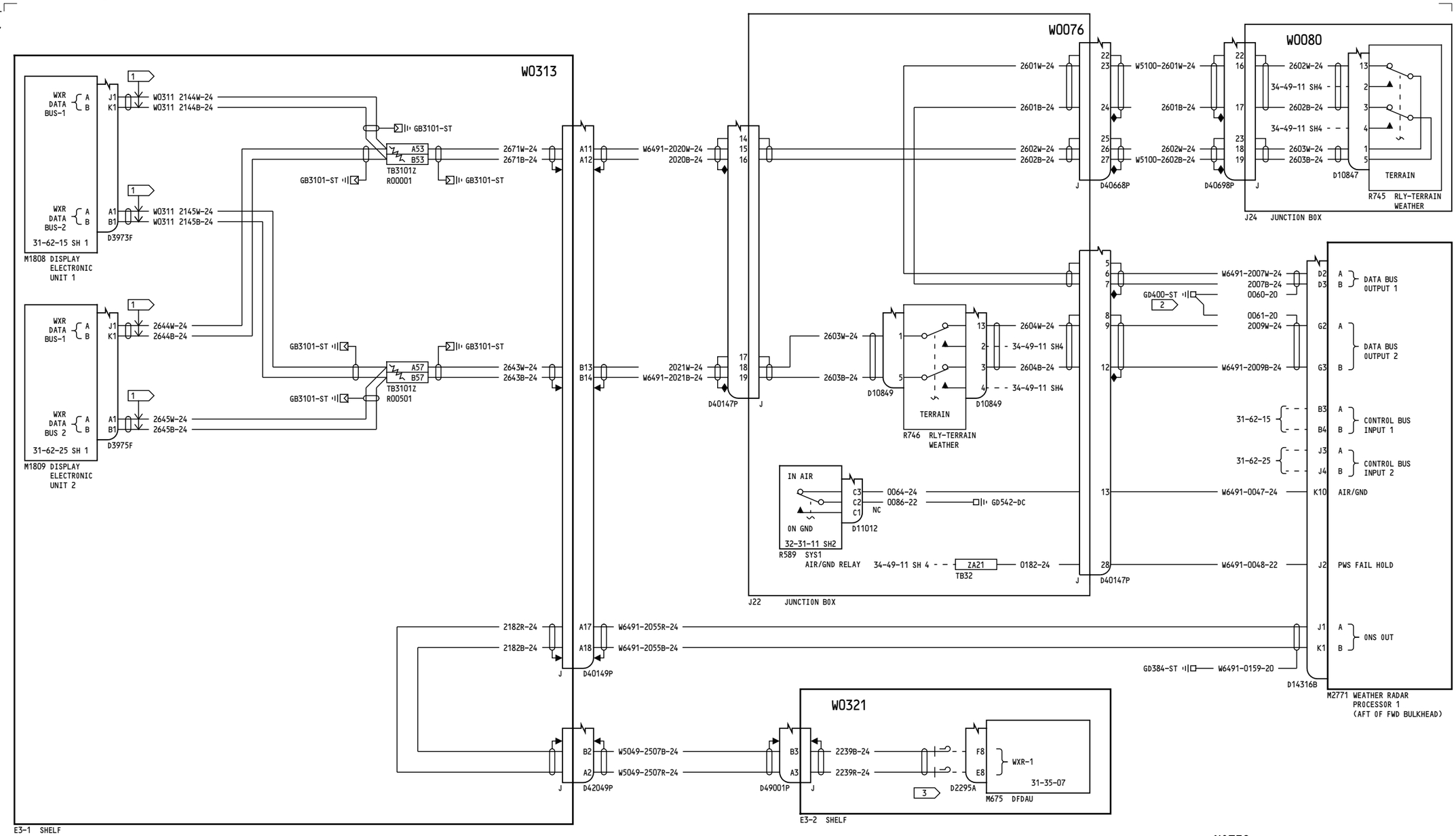

NOTES:

1. STUB LINE 6 INCHES 70 OHMS.
2. GROUND WIRE LESS THAN OR EQUAL TO 18 INCHES.
3. CAP AND STOW NEAR D2295A

BOEING PROPRIETARY - Copyright © - Unpublished Work - See title page for details.

34-41-11

Page 3
Sheet 2
Jun 21/2016

-A
69

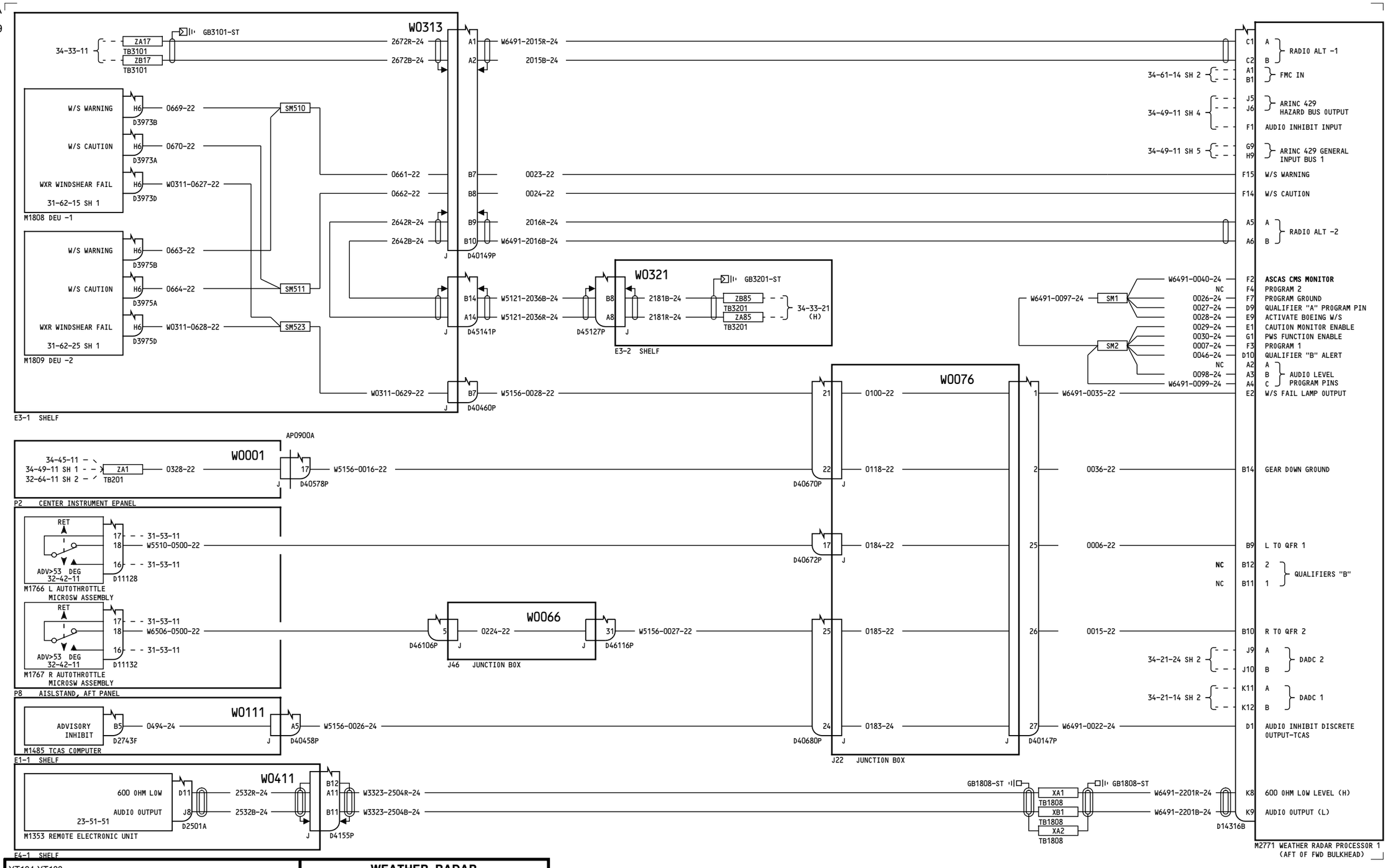

YT104-YT133

WEATHER RADAR

D280A351

34-41-11
Page 3
Sheet 3
Jun 21/2016

BOEING PROPRIETARY - Copyright © - Unpublished Work - See title page for details.

-E
49

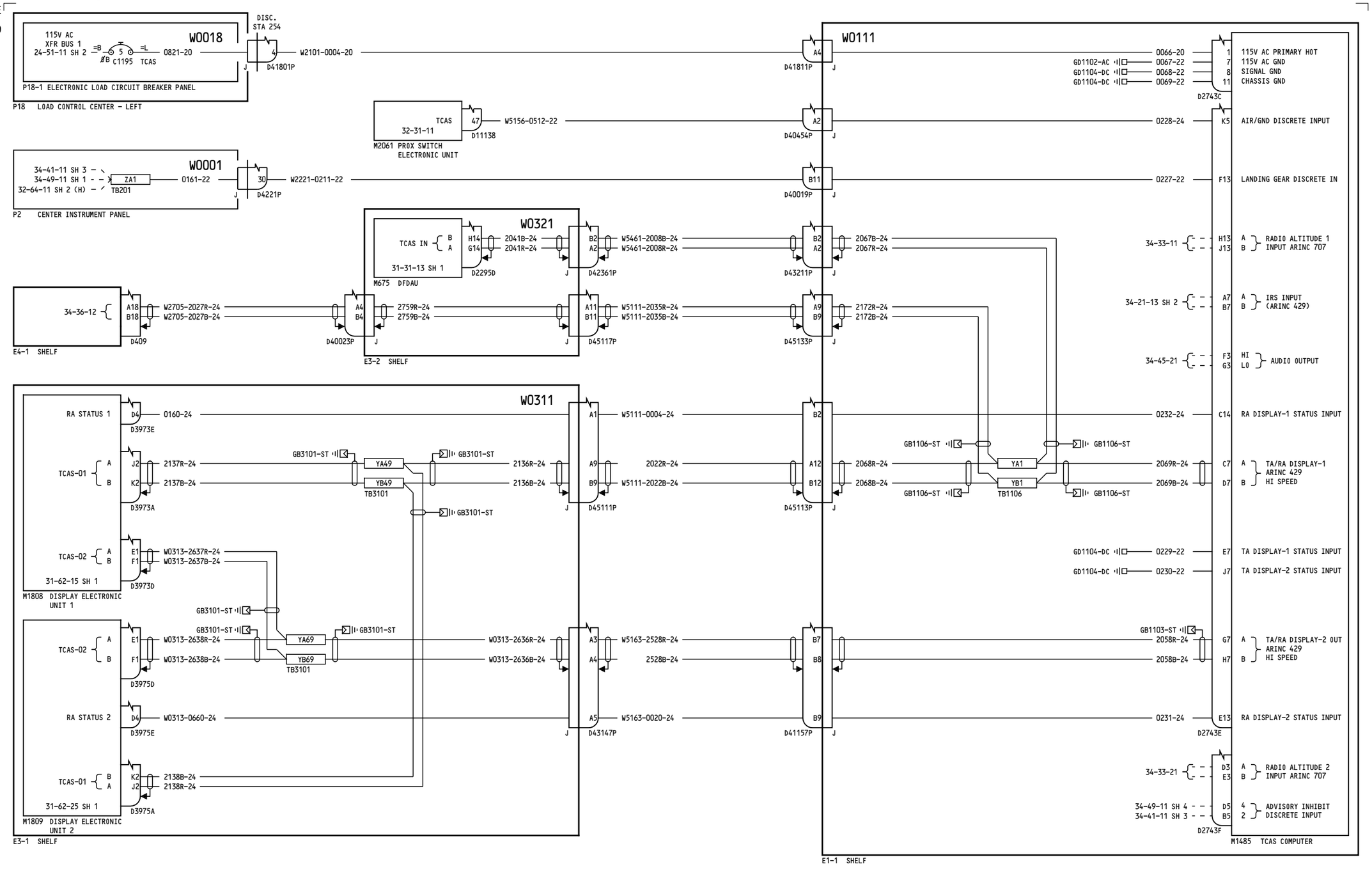

ALL	TCAS POWER AND DISPLAY
	D280A351

BOEING PROPRIETARY - Copyright © - Unpublished Work - See title page for details.

34-45-11
Page 1
Jun 21/2016

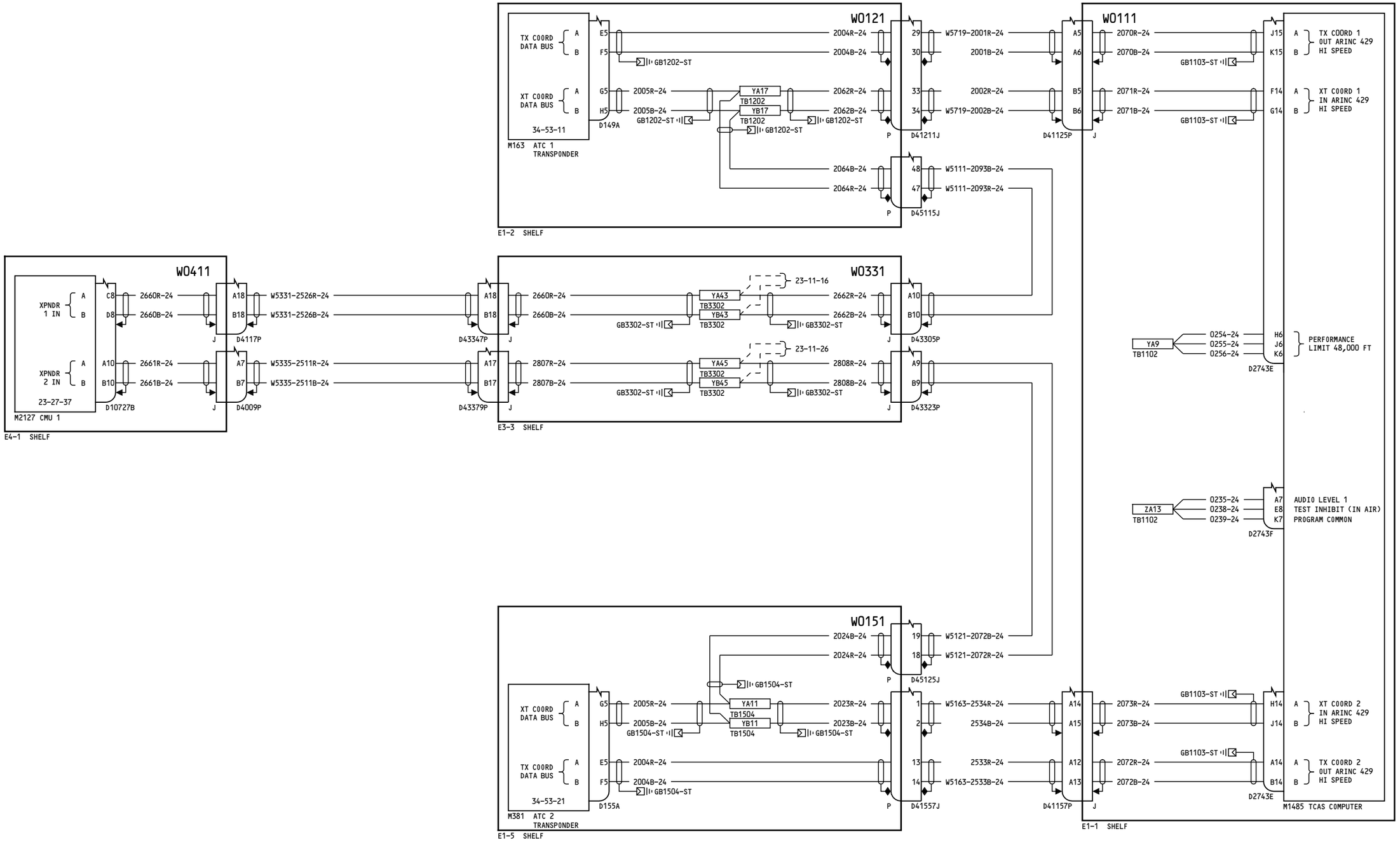

ALL	TCAS ANTENNA/INTERFACE
	D280A351

34-45-21

Page 1
Sheet 1
Jun 21/2016

BOEING PROPRIETARY - Copyright © - Unpublished Work - See title page for details.

-G
2

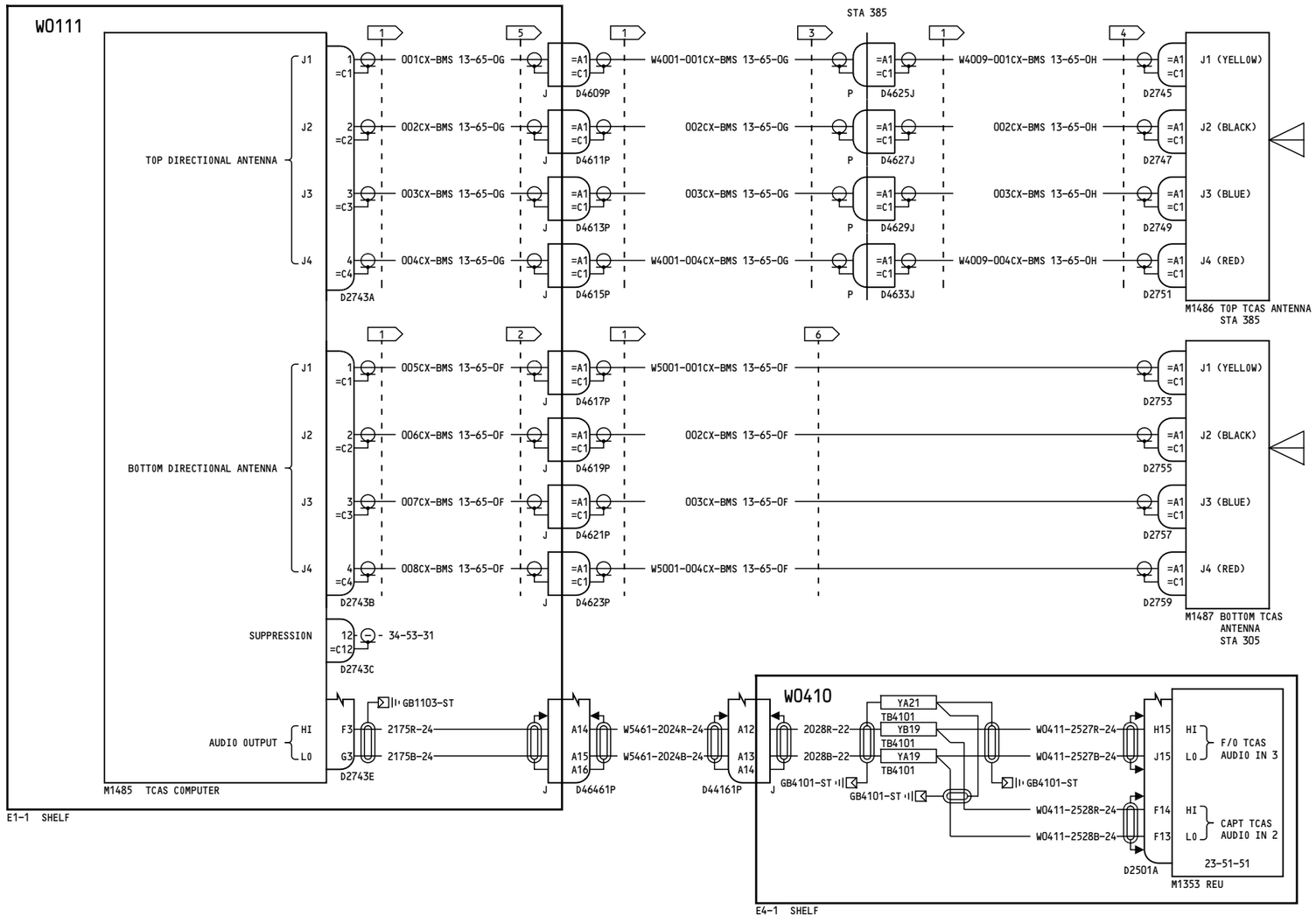

NOTES:

1. BALANCED ASSEMBLY. ALL FOUR CABLES IN EACH GROUP MUST BE OF EQUAL LENGTH PLUS OR MINUS 1/2 INCH.
2. MAX. CABLE LENGTH 2 FEET MIN. CABLE LENGTH 1.5 FEET.
3. MAX. CABLE LENGTH 24 FEET MIN. CABLE LENGTH 20 FEET.
4. MAX. CABLE LENGTH 3 FEET MIN. CABLE LENGTH 1.5 FEET.
5. MAX. CABLE LENGTH 2 FEET.
6. MAX. CABLE LENGTH 18 FEET MIN. CABLE LENGTH 12 FEET 9 INCHES.

BOEING PROPRIETARY - Copyright © - Unpublished Work - See title page for details.

34-45-21

Page 1
Sheet 2
Jun 21/2016

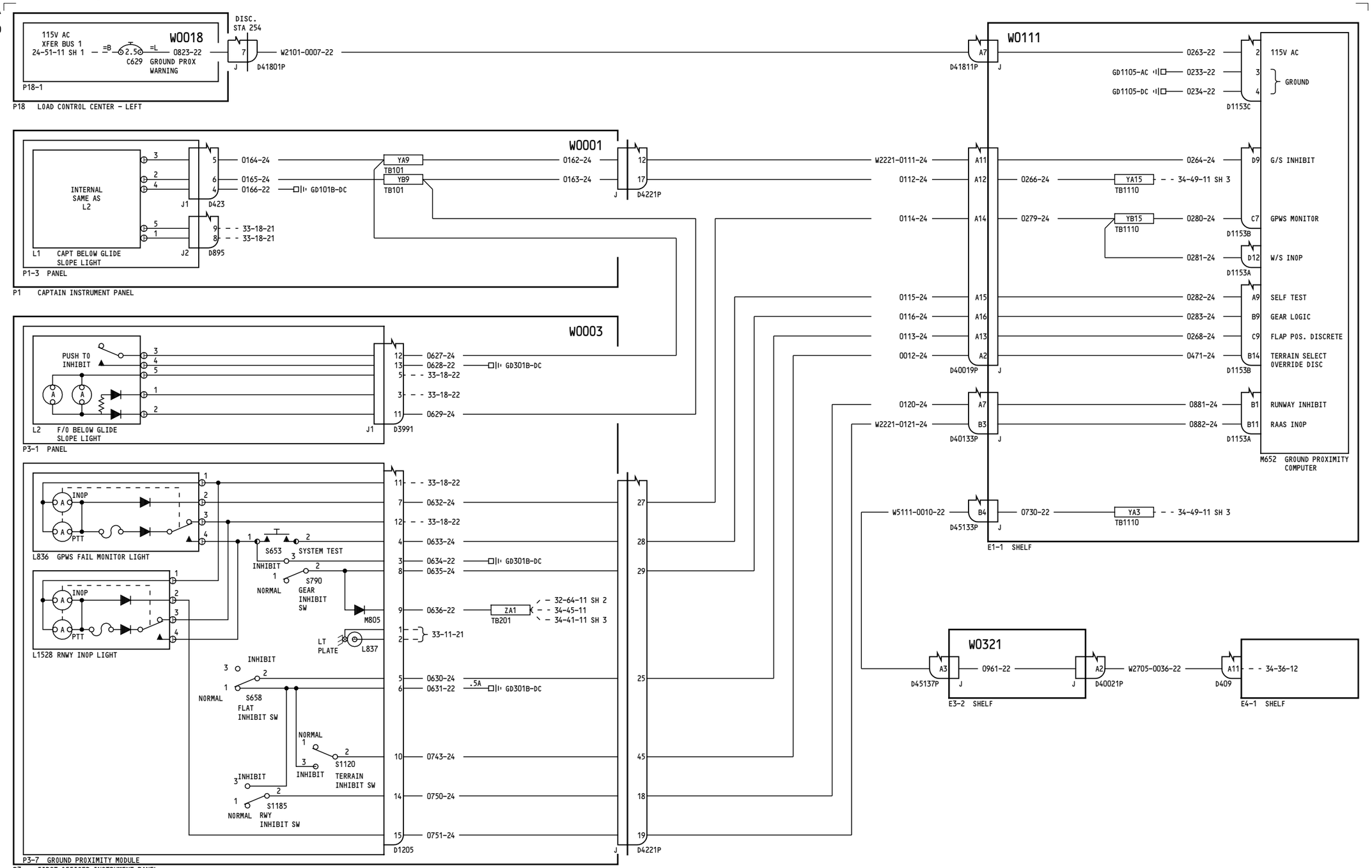

YT101-YT103

GROUND PROXIMITY WARNING

D280A351

34-49-11

Page 1
Sheet 1
Oct 14/2014

BOEING PROPRIETARY - Copyright © - Unpublished Work - See title page for details.

-A
19

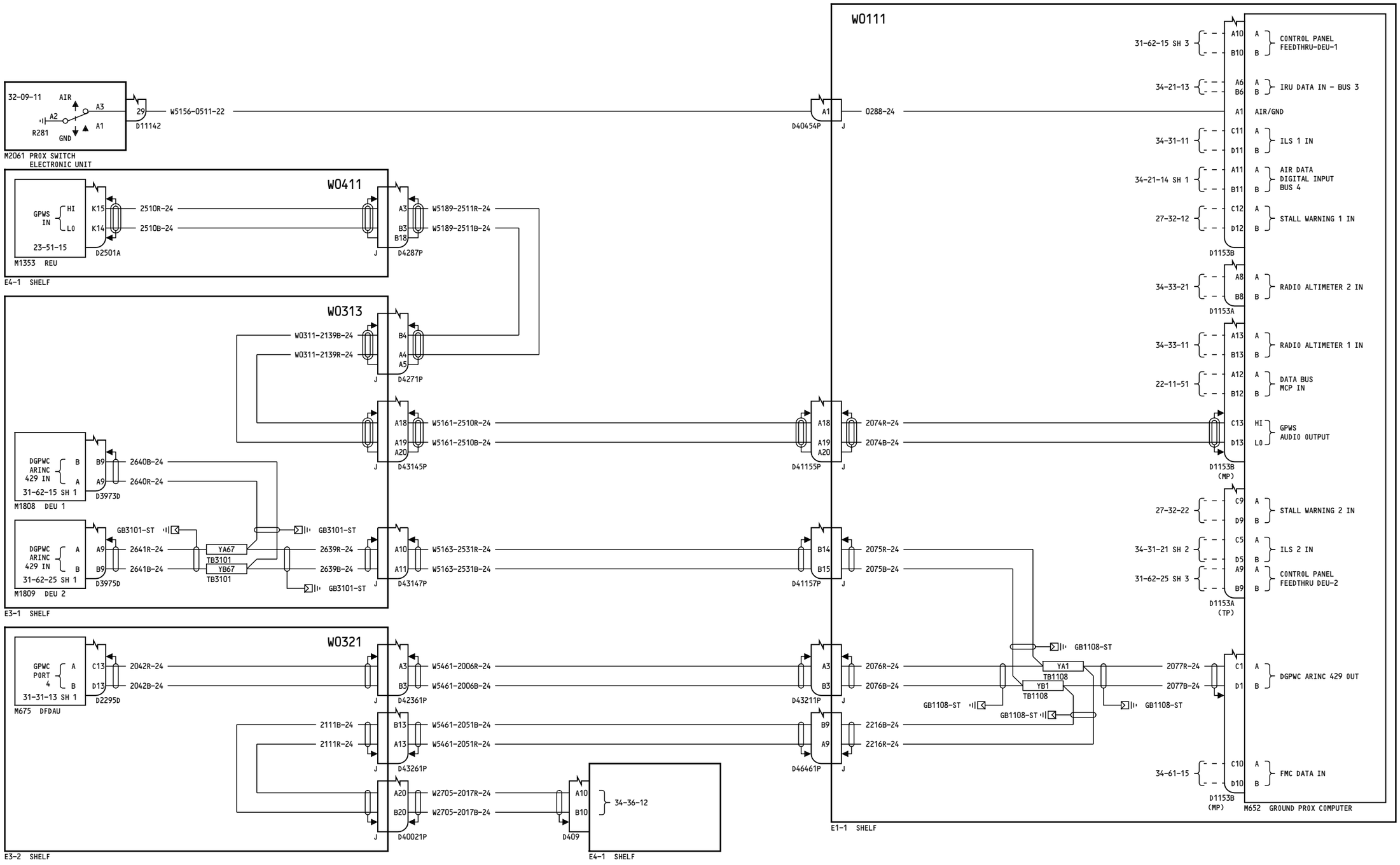

YT101-YT103	GROUND PROXIMITY WARNING
	D280A351

34-49-11
Page 1
Sheet 2
Aug 15/2013

BOEING PROPRIETARY - Copyright © - Unpublished Work - See title page for details.

1106

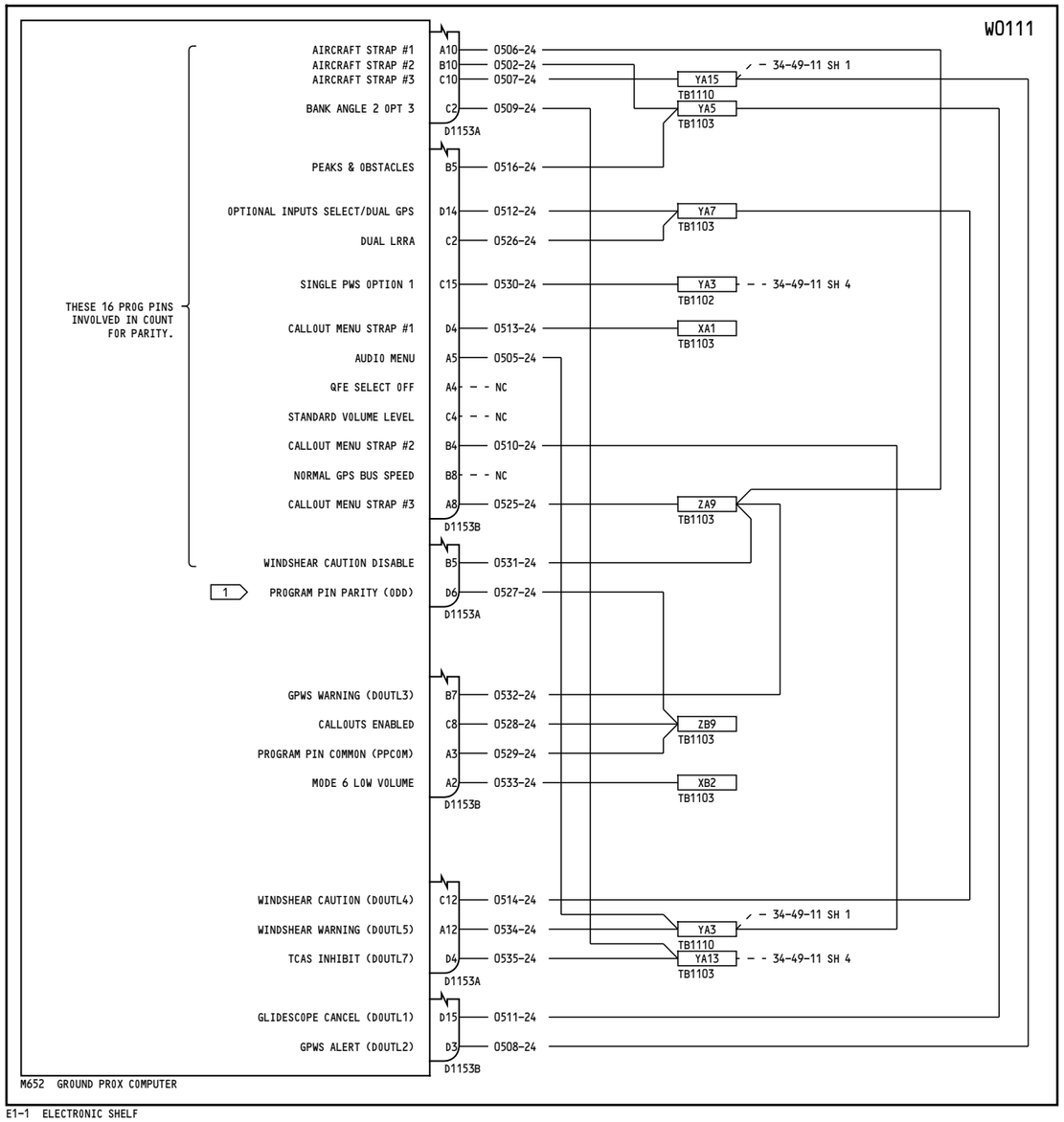

NOTES:

1 PROGRAM PIN MONITORING IS PROVIDED VIA A PARITY PIN (D6) WHICH IS TO BE CONNECTED OR NOT TO A3 COM SUCH THAT AN ODD NUMBER OF PROGRAM PINS ARE USED.

YT101-YT103	GROUND PROXIMITY WARNING
	D280A351

BOEING PROPRIETARY - Copyright © - Unpublished Work - See title page for details.

34-49-11
Page 1
Sheet 3
Aug 15/2013

47

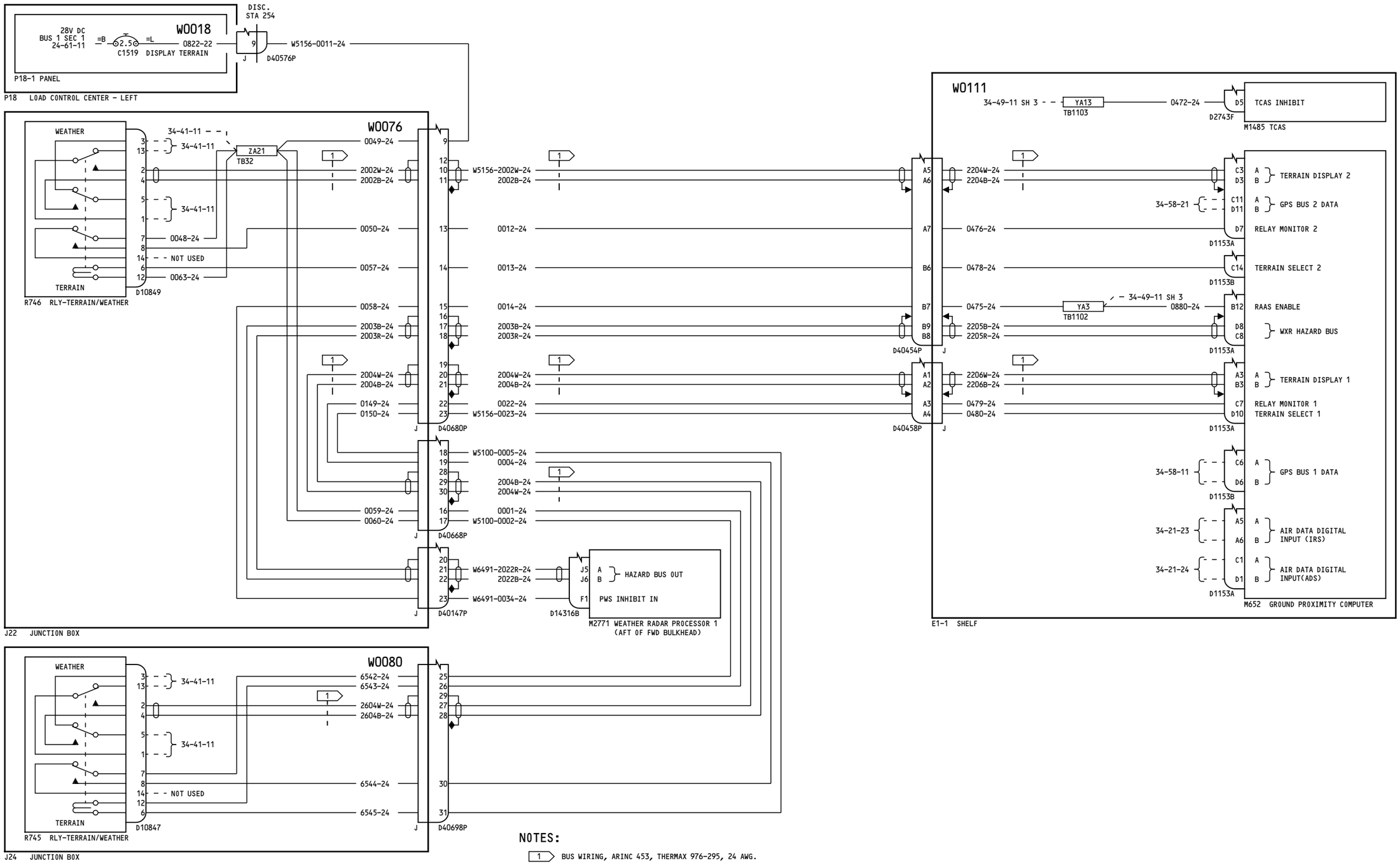

NOTES:

1 BUS WIRING, ARINC 453, THERMAX 976-295, 24 AWG.

YT101-YT103	GROUND PROXIMITY WARNING
	D280A351

34-49-11
Page 1
Sheet 4
Aug 15/2013

BOEING PROPRIETARY - Copyright © - Unpublished Work - See title page for details.

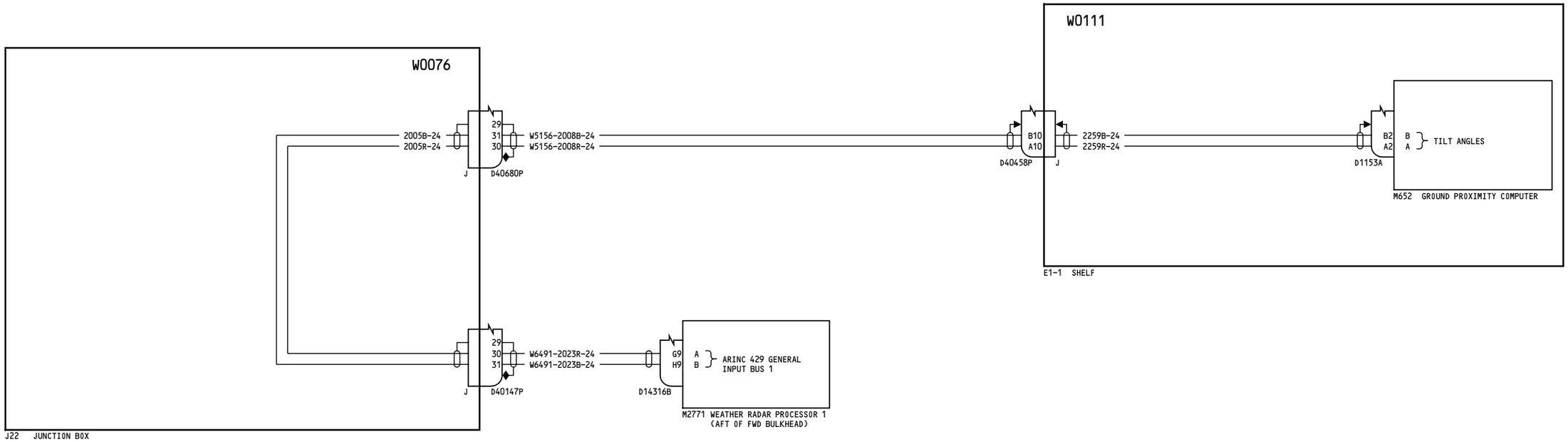

YT101-YT103	GROUND PROXIMITY WARNING
	D280A351

BOEING PROPRIETARY - Copyright © - Unpublished Work - See title page for details.

34-49-11

Page 1
Sheet 5
Aug 15/2013

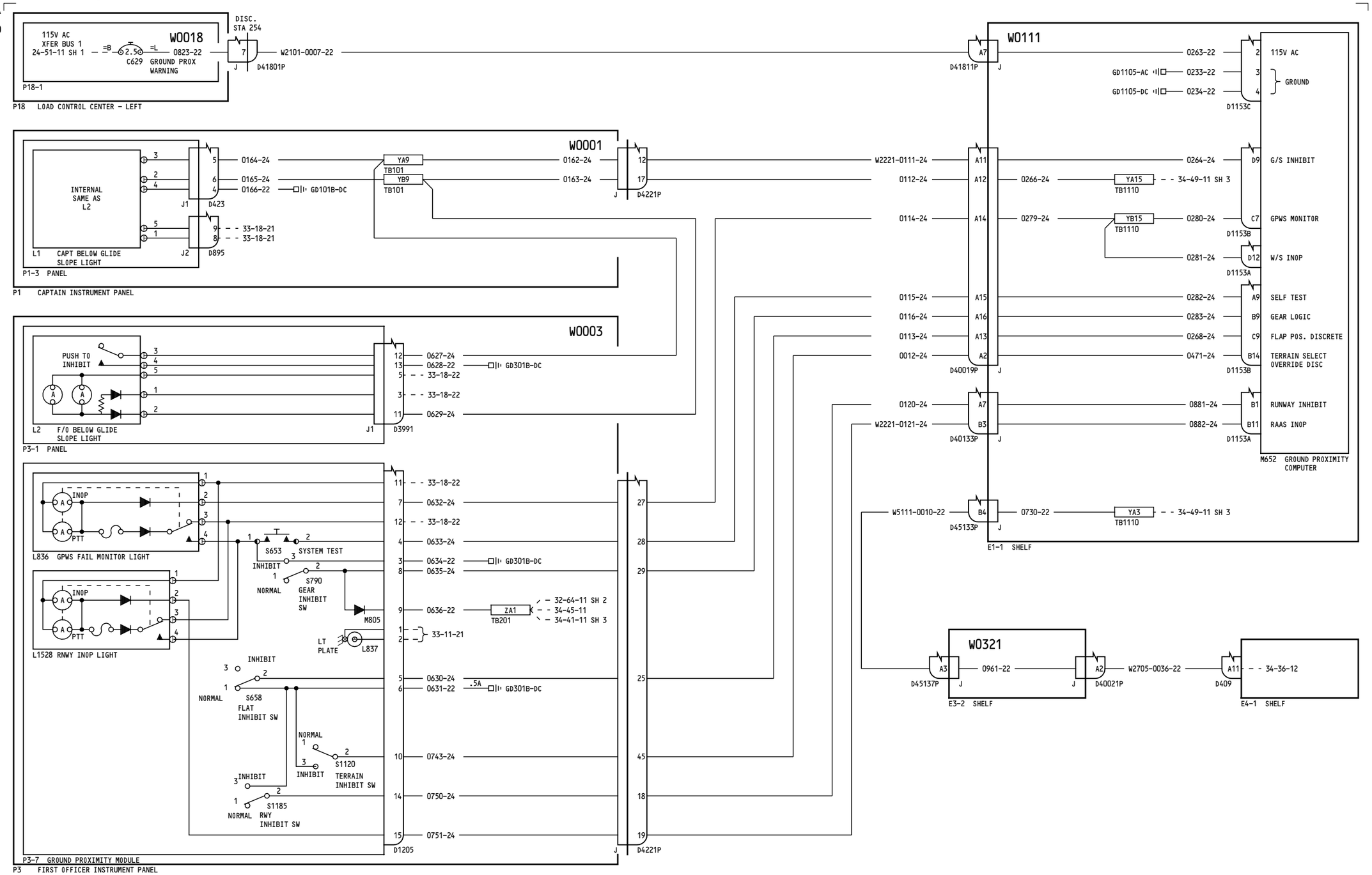

YT104

GROUND PROXIMITY WARNING

D280A351

34-49-11

Page 2
Sheet 1
Oct 14/2014

BOEING PROPRIETARY - Copyright © - Unpublished Work - See title page for details.

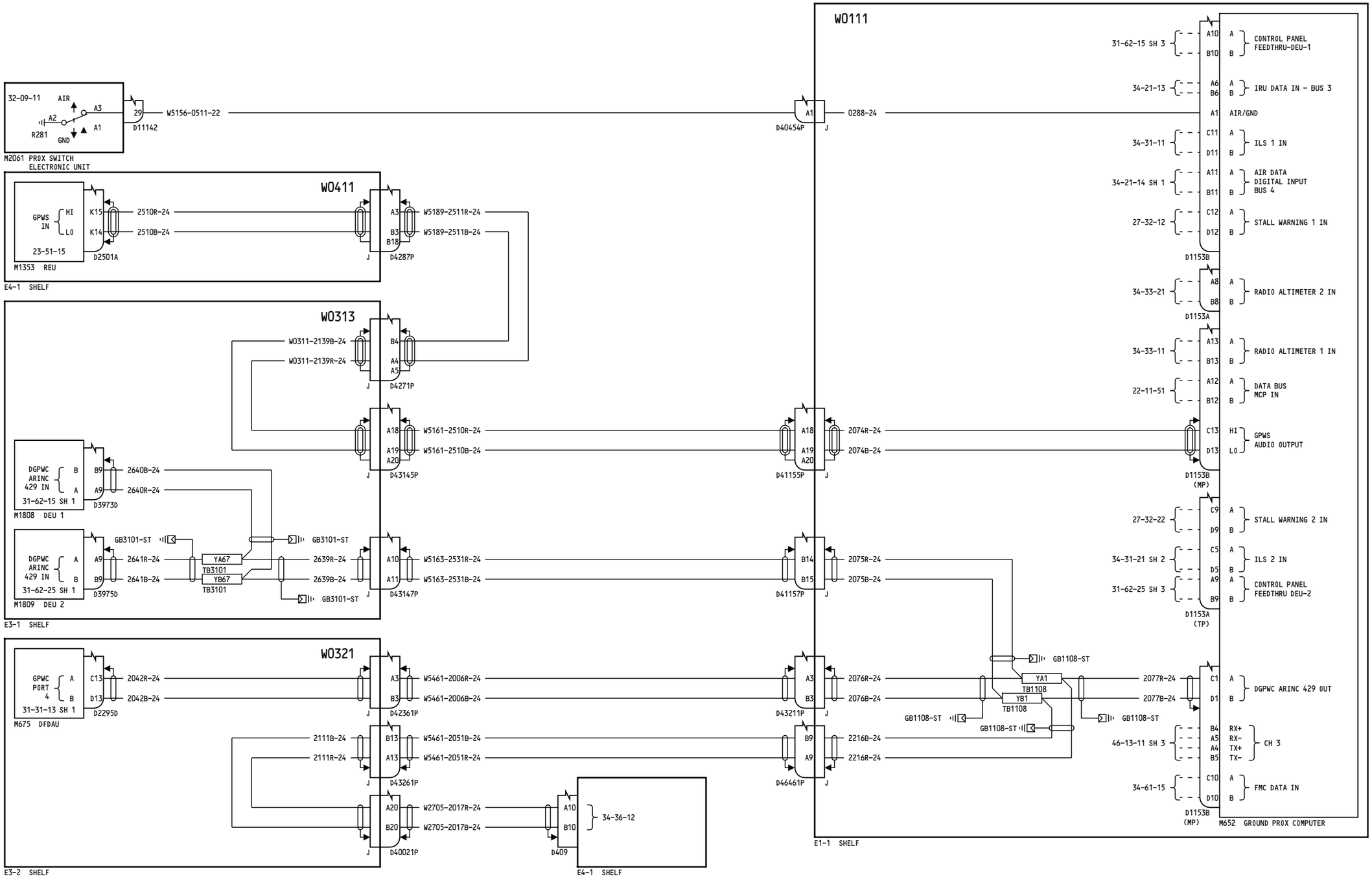

YT104

GROUND PROXIMITY WARNING

D280A351

34-49-11

Page 2
Sheet 2
Nov 18/2013

BOEING PROPRIETARY - Copyright © - Unpublished Work - See title page for details.

1106

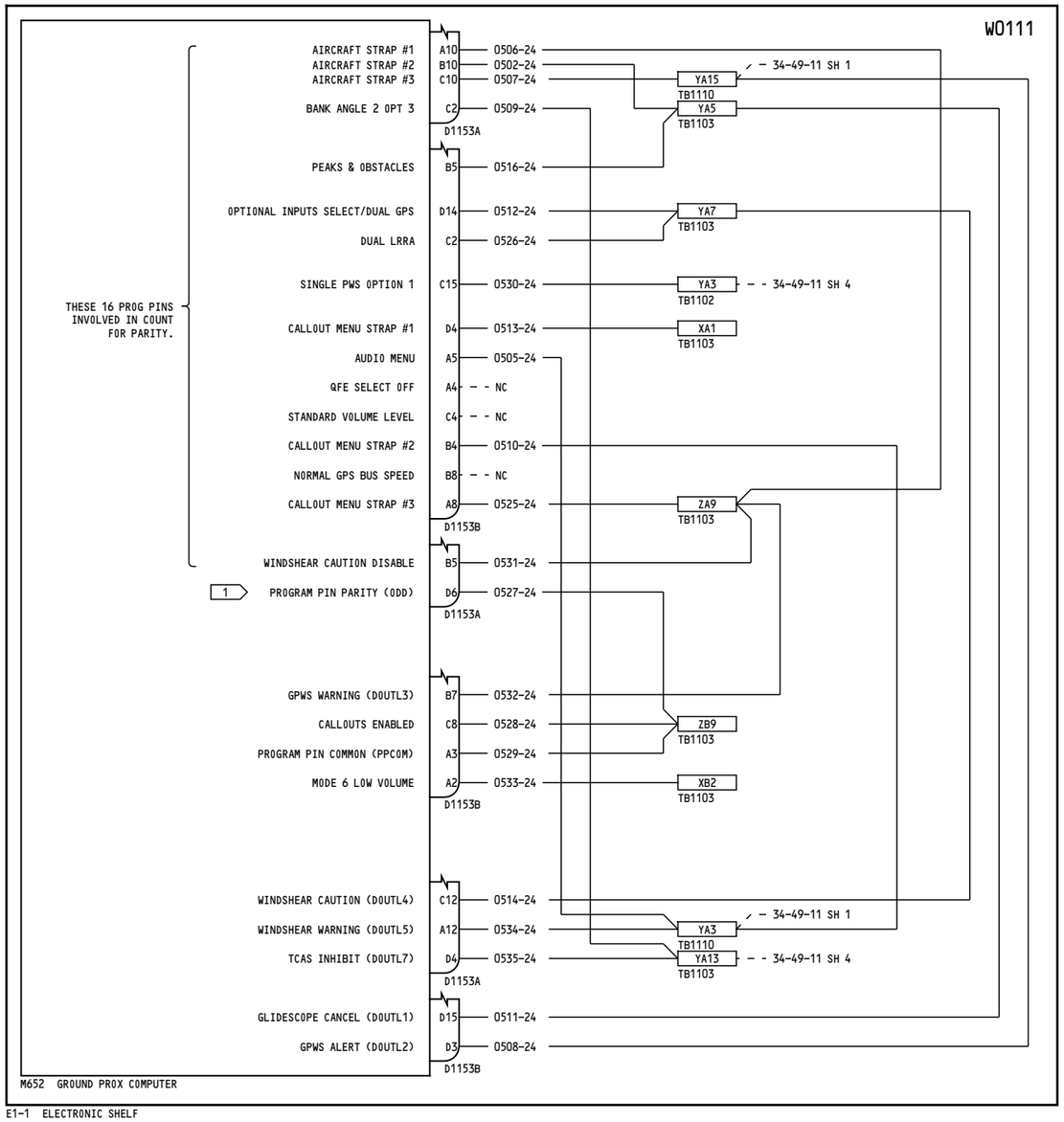

NOTES:

1 PROGRAM PIN MONITORING IS PROVIDED VIA A PARITY PIN (D6) WHICH IS TO BE CONNECTED OR NOT TO A3 COM SUCH THAT AN ODD NUMBER OF PROGRAM PINS ARE USED.

YT104	GROUND PROXIMITY WARNING
	D280A351

BOEING PROPRIETARY - Copyright © - Unpublished Work - See title page for details.

34-49-11
Page 2
Sheet 3
Nov 18/2013

47

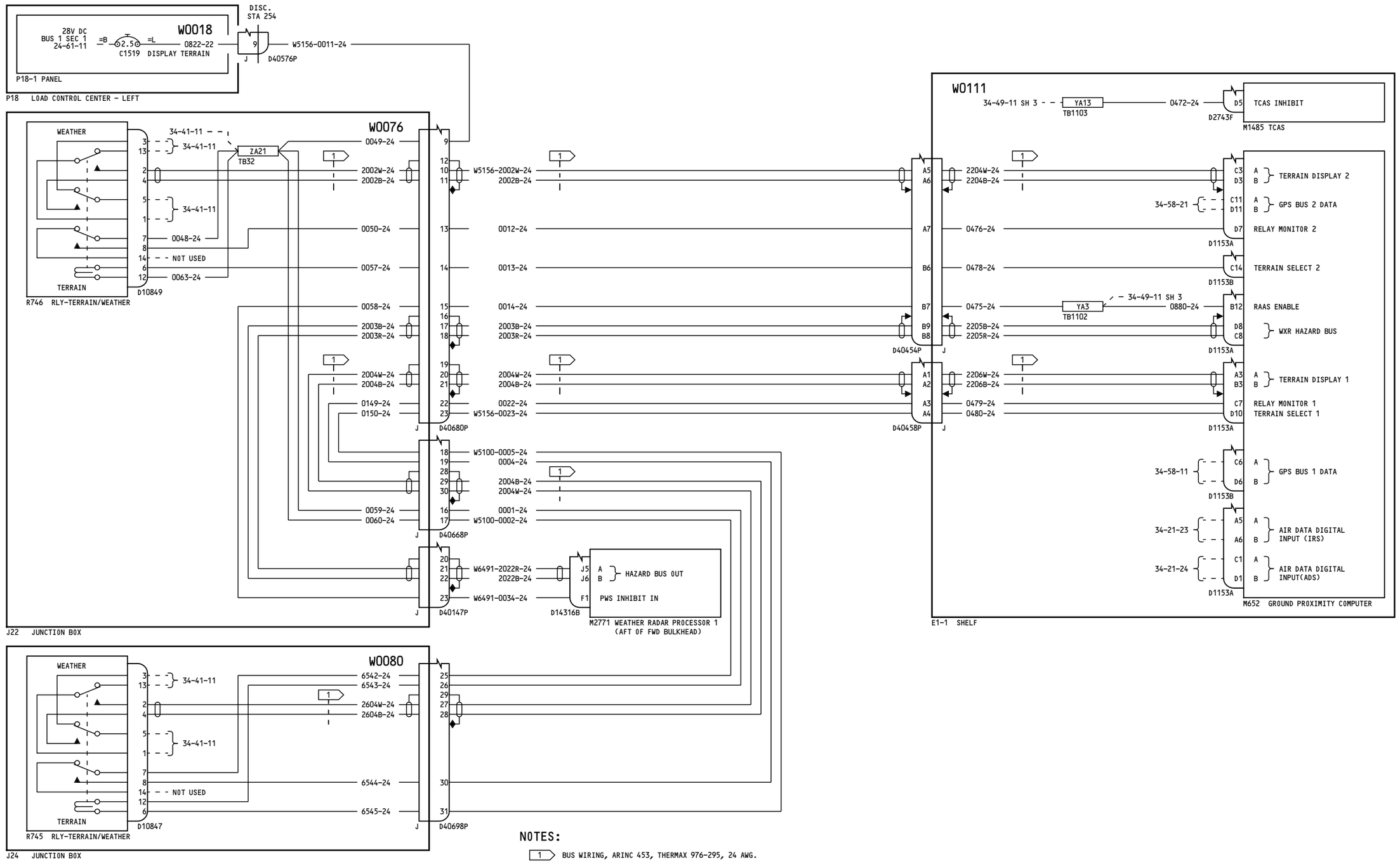

YT104

GROUND PROXIMITY WARNING

D280A351

34-49-11

Page 2
Sheet 4
Nov 18/2013

BOEING PROPRIETARY - Copyright © - Unpublished Work - See title page for details.

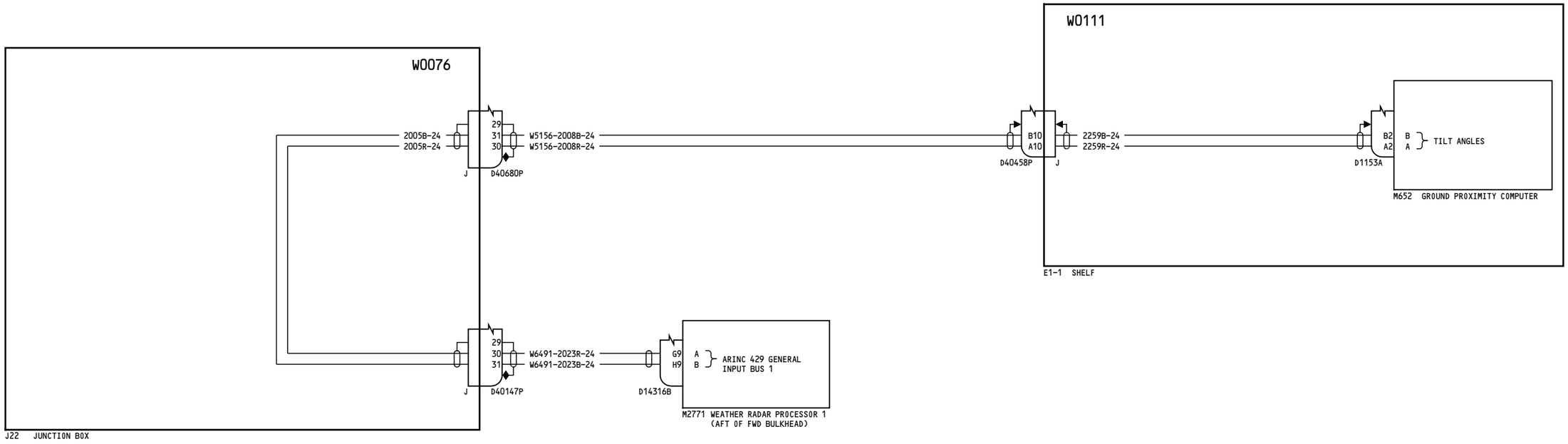

YT104	GROUND PROXIMITY WARNING
	D280A351

BOEING PROPRIETARY - Copyright © - Unpublished Work - See title page for details.

34-49-11

Page 2
Sheet 5
Nov 18/2013

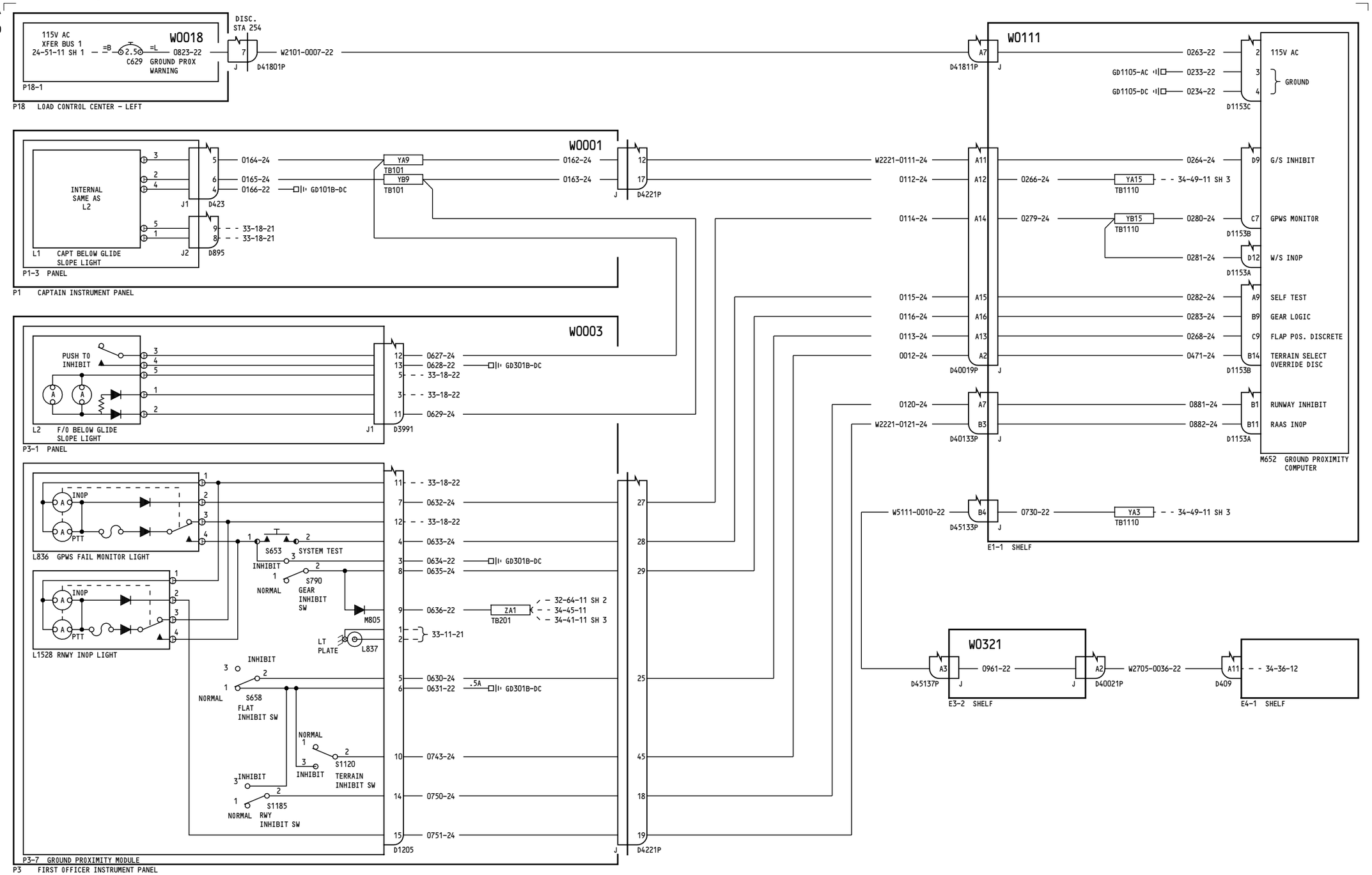

YT105-YT133

GROUND PROXIMITY WARNING

D280A351

34-49-11

Page 3
Sheet 1
Jun 21/2016

BOEING PROPRIETARY - Copyright © - Unpublished Work - See title page for details.

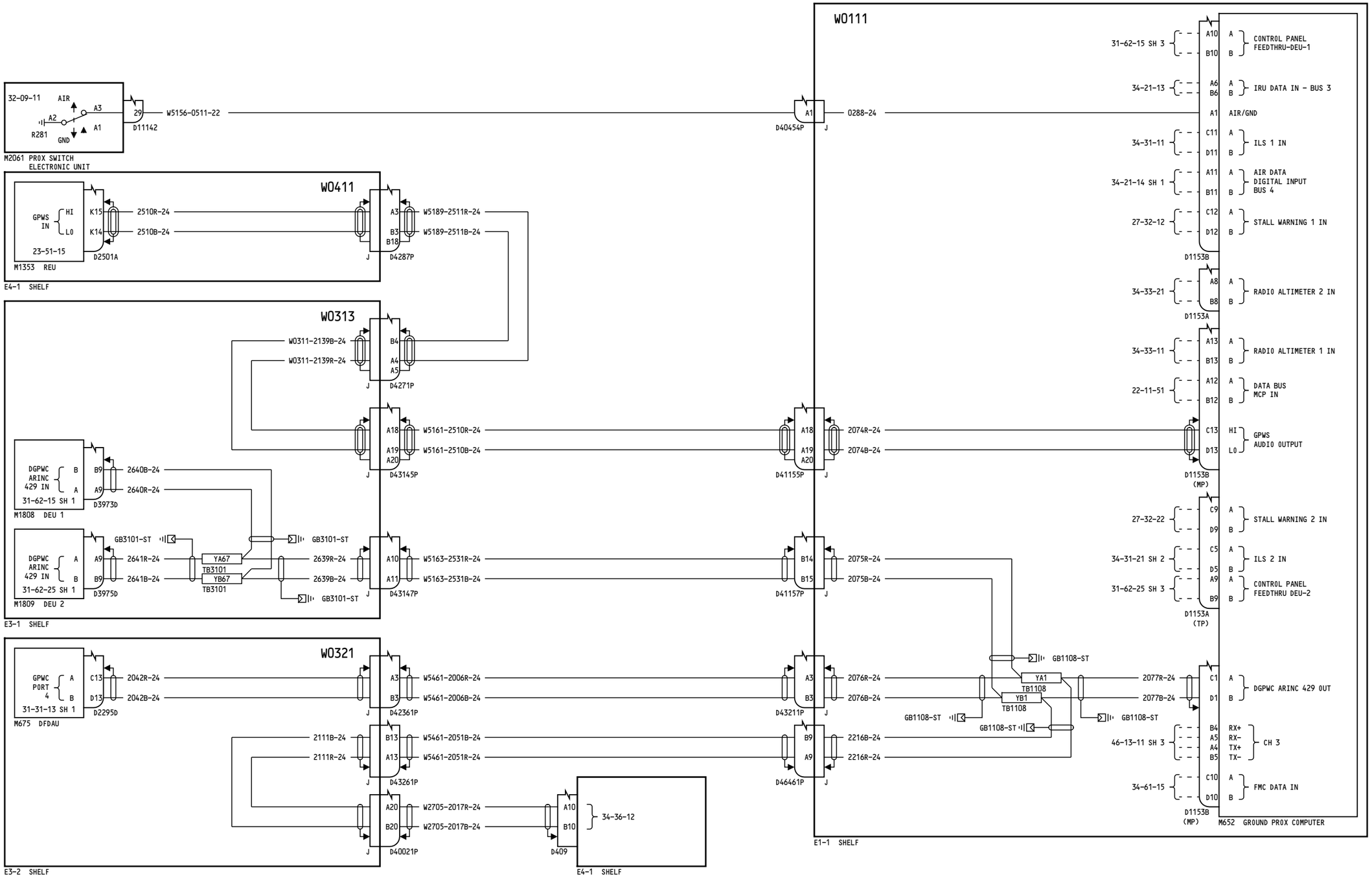

YT105-YT133	GROUND PROXIMITY WARNING
	D280A351

34-49-11

Page 3
Sheet 2
Jun 21/2016

BOEING PROPRIETARY - Copyright © - Unpublished Work - See title page for details.

1119

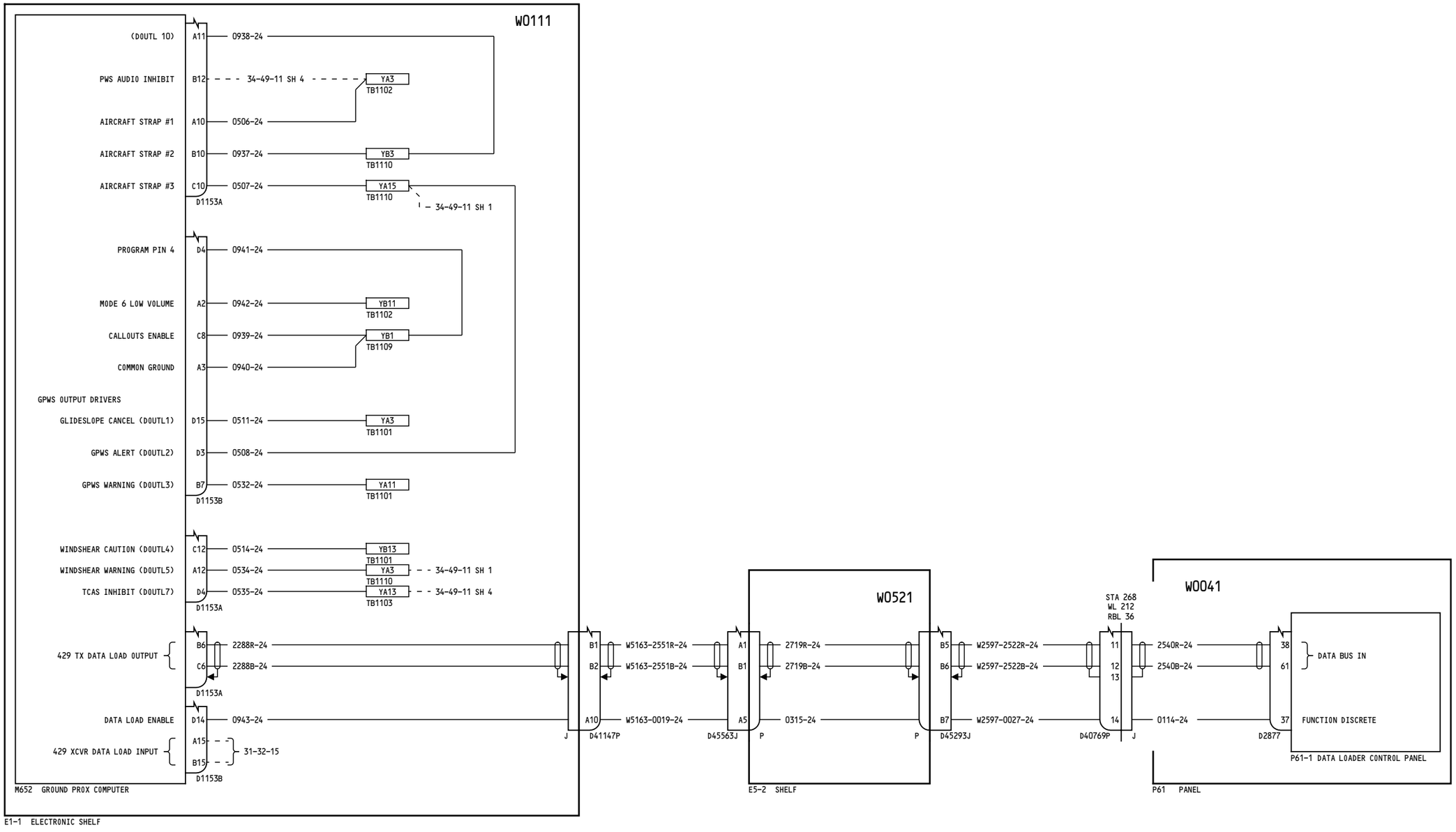

YT105-YT133	GROUND PROXIMITY WARNING
	D280A351

BOEING PROPRIETARY - Copyright © - Unpublished Work - See title page for details.

34-49-11
Page 3
Sheet 3
Jun 21/2016

47

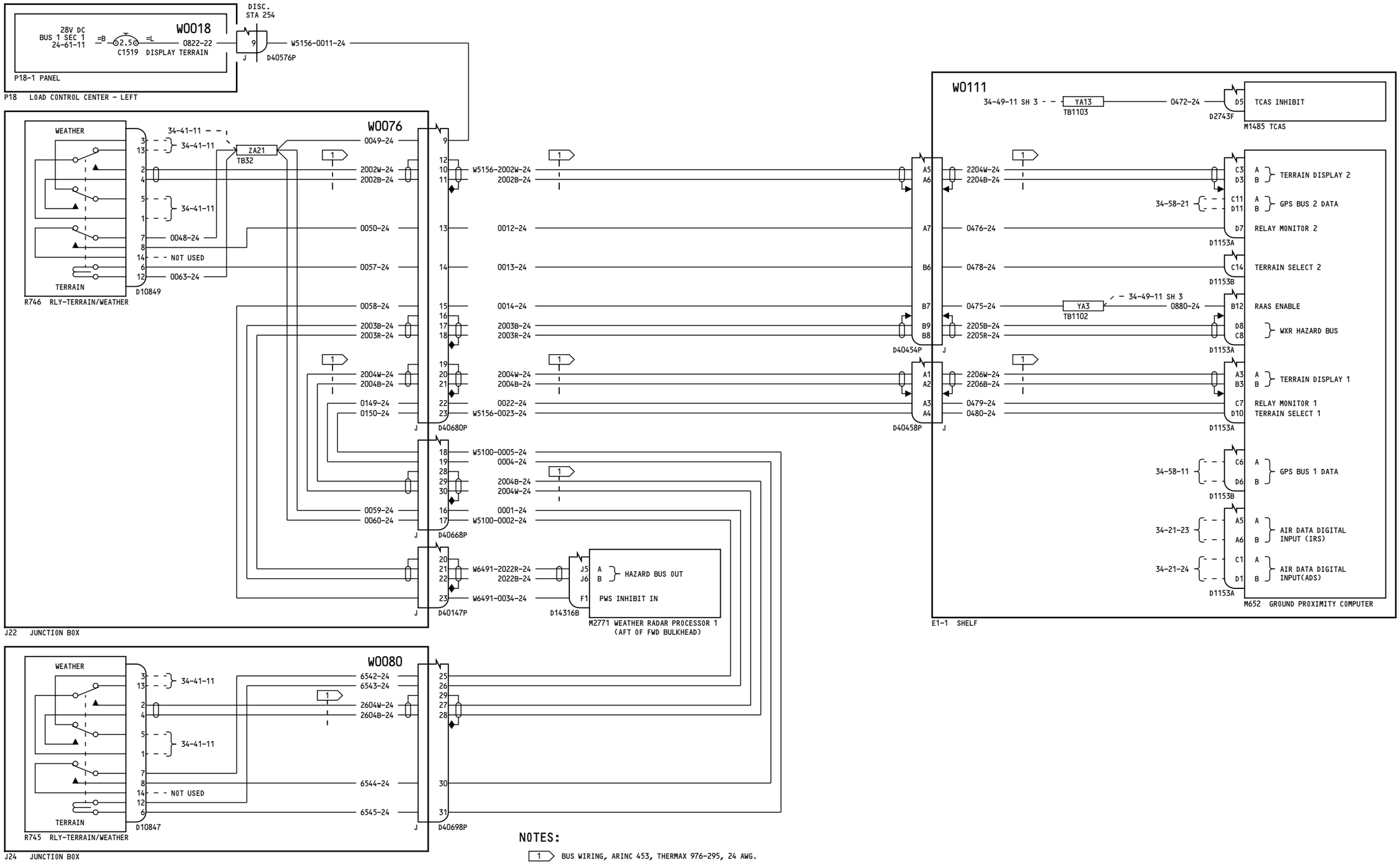

NOTES:

1 BUS WIRING, ARINC 453, THERMAX 976-295, 24 AWG.

YT105-YT133

GROUND PROXIMITY WARNING

D280A351

34-49-11

Page 3
Sheet 4
Jun 21/2016

BOEING PROPRIETARY - Copyright © - Unpublished Work - See title page for details.

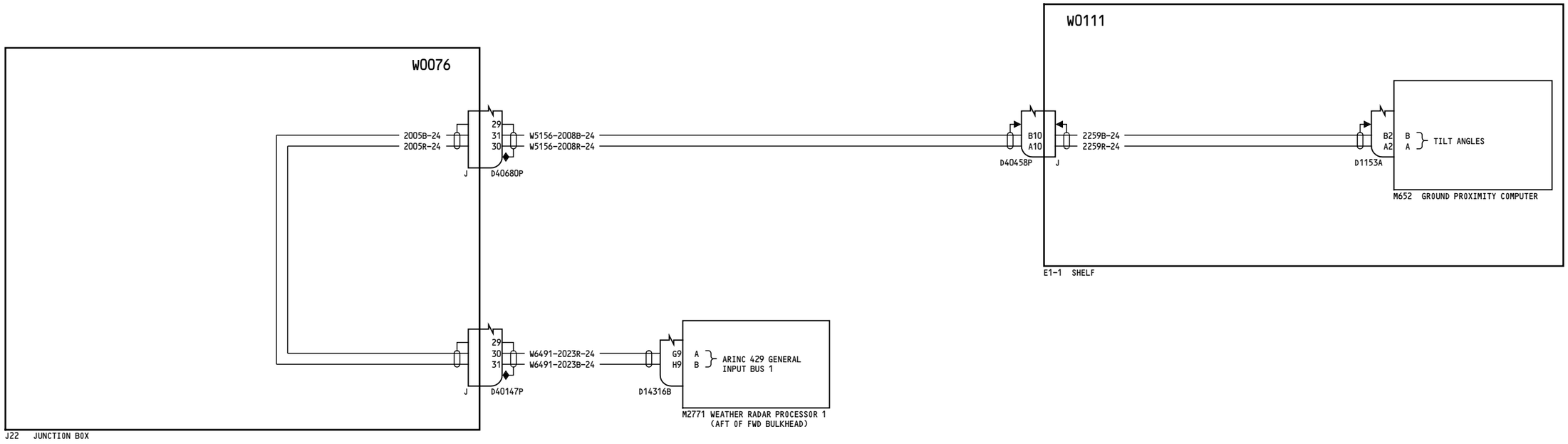

YT105-YT133	GROUND PROXIMITY WARNING
	D280A351

BOEING PROPRIETARY - Copyright © - Unpublished Work - See title page for details.

34-49-11

Page 3
Sheet 5
Jun 21/2016

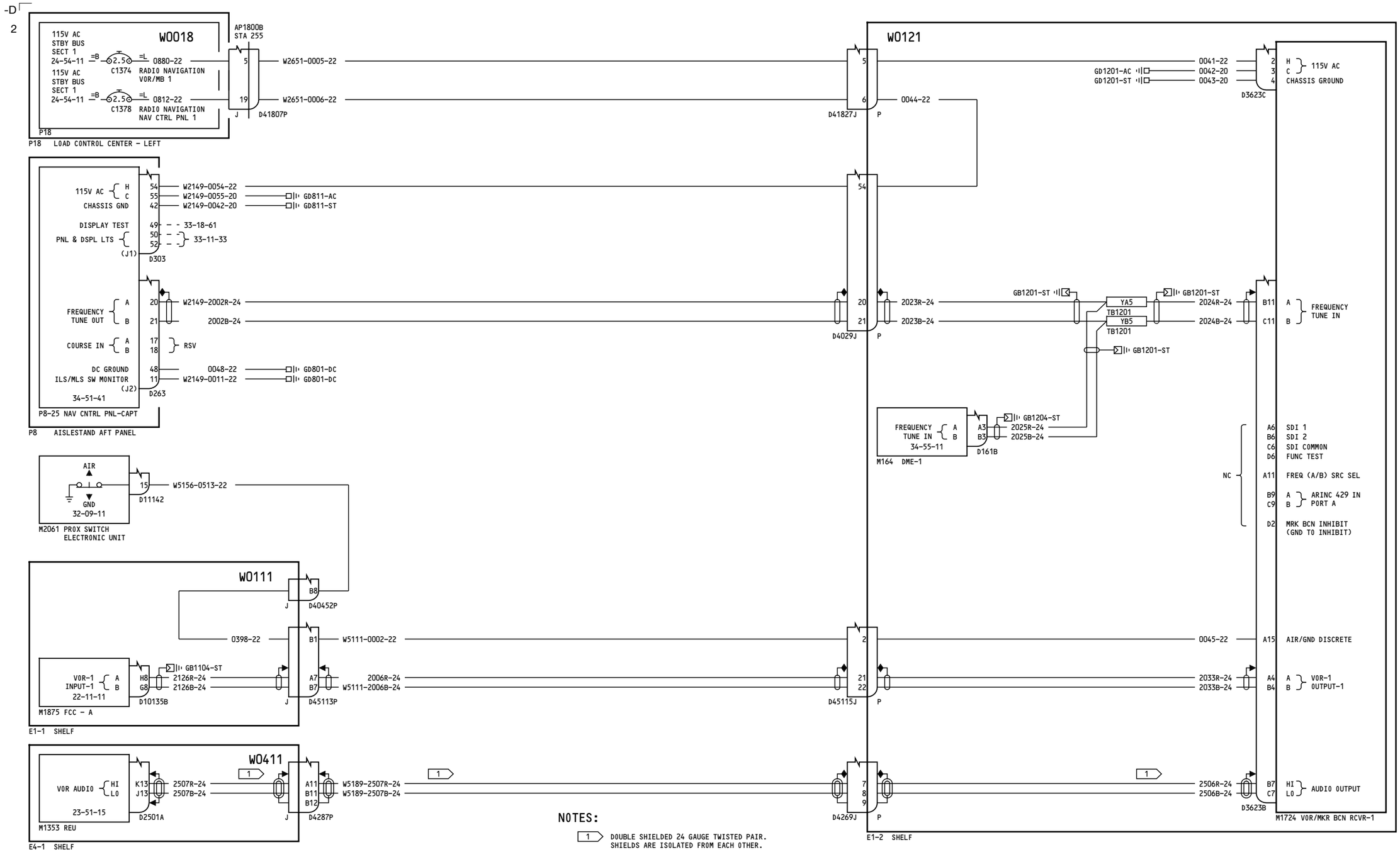

YT101-YT119, YT126-YT129

VOR NO. 1

D280A351

34-51-11

Page 1
Sheet 1
Jun 21/2016

BOEING PROPRIETARY - Copyright © - Unpublished Work - See title page for details.

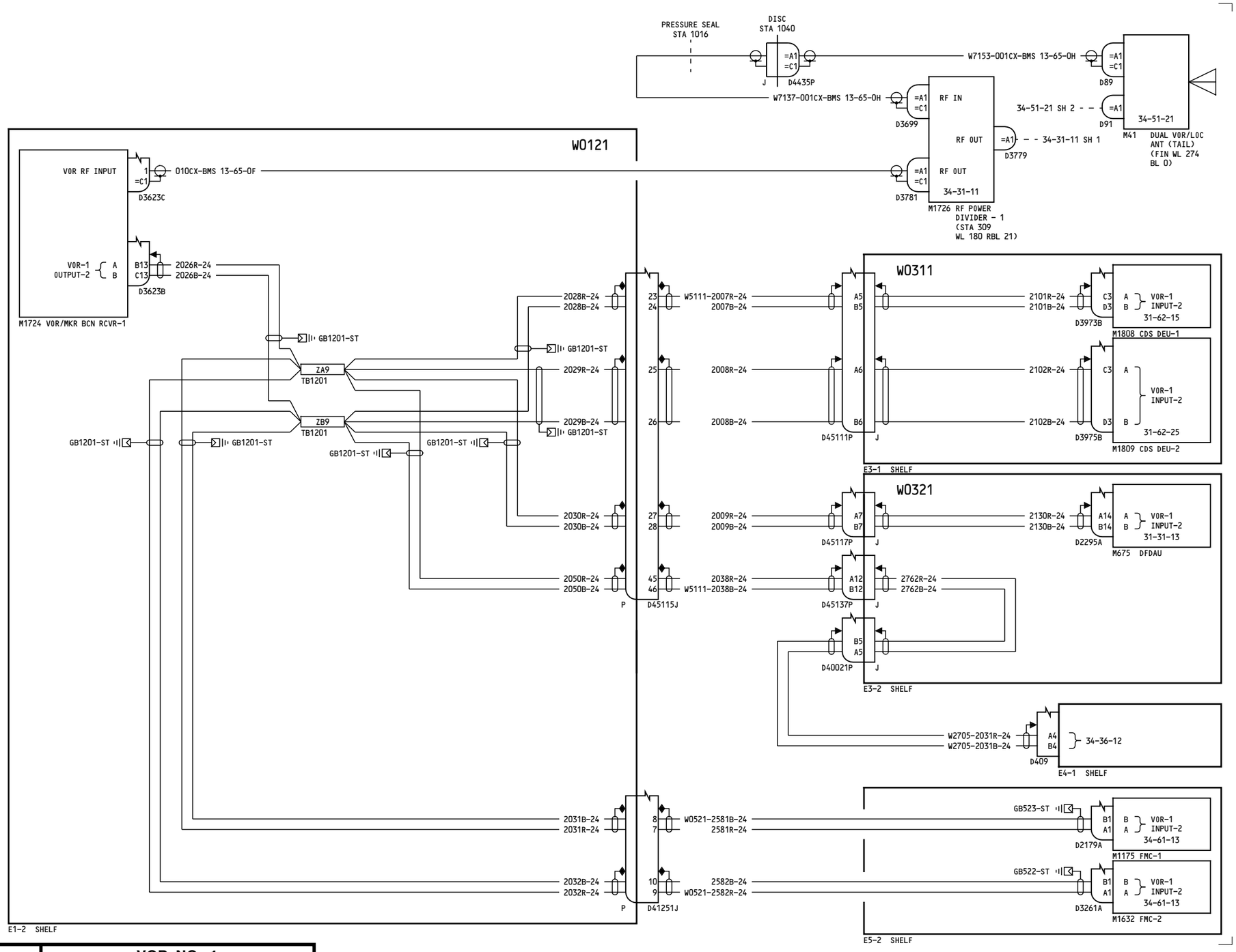

YT101-YT119, YT126-YT129

VOR NO. 1

D280A351

34-51-11

Page 1
Sheet 2
Jun 21/2016

34-51-11

Page 1
Sheet 2
Jun 21/2016

BOEING PROPRIETARY - Copyright © - Unpublished Work - See title page for details.

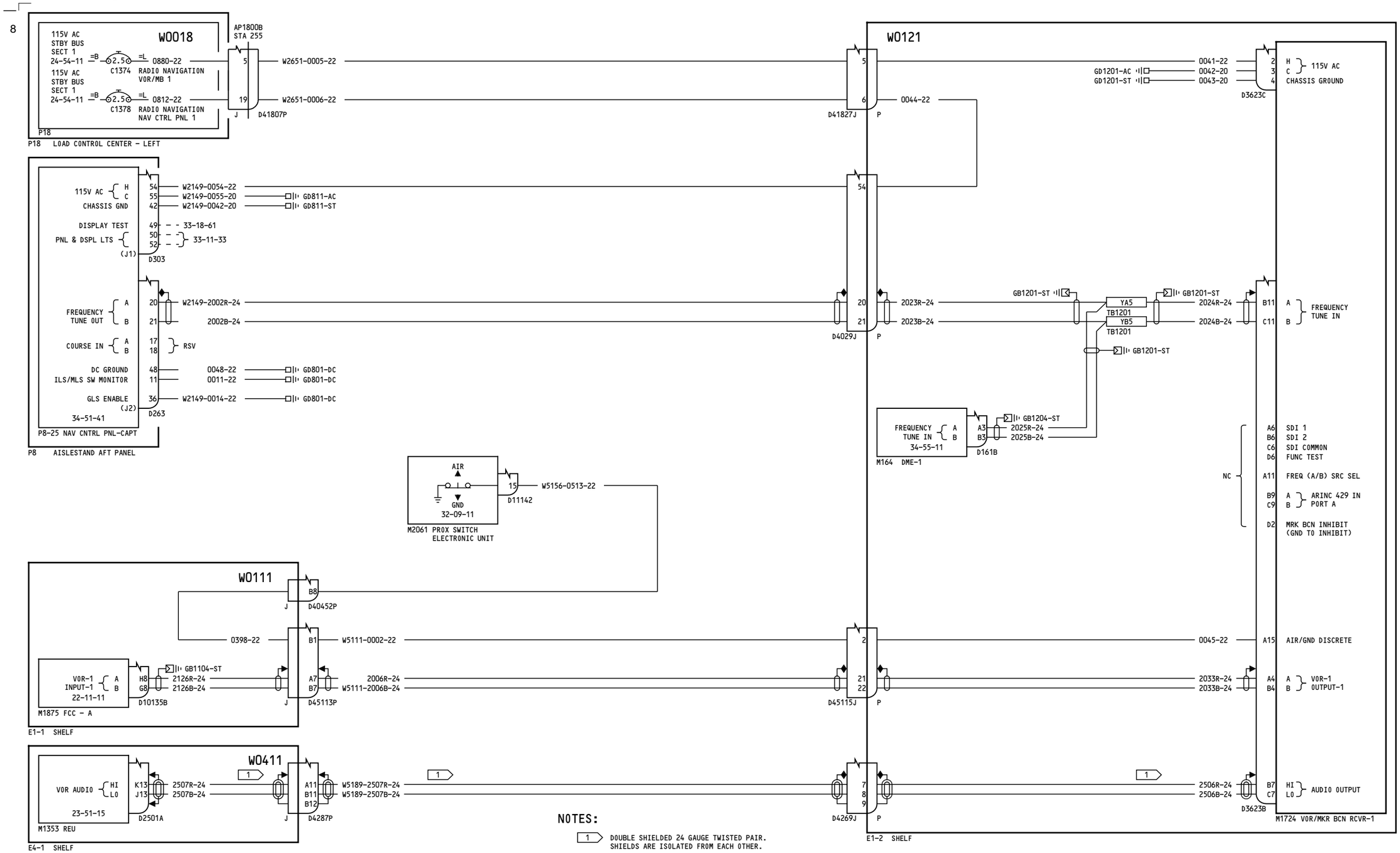

YT120, YT130-YT133	VOR NO. 1
	D280A351

34-51-11
Page 2
Sheet 1
Jun 21/2016

BOEING PROPRIETARY - Copyright © - Unpublished Work - See title page for details.

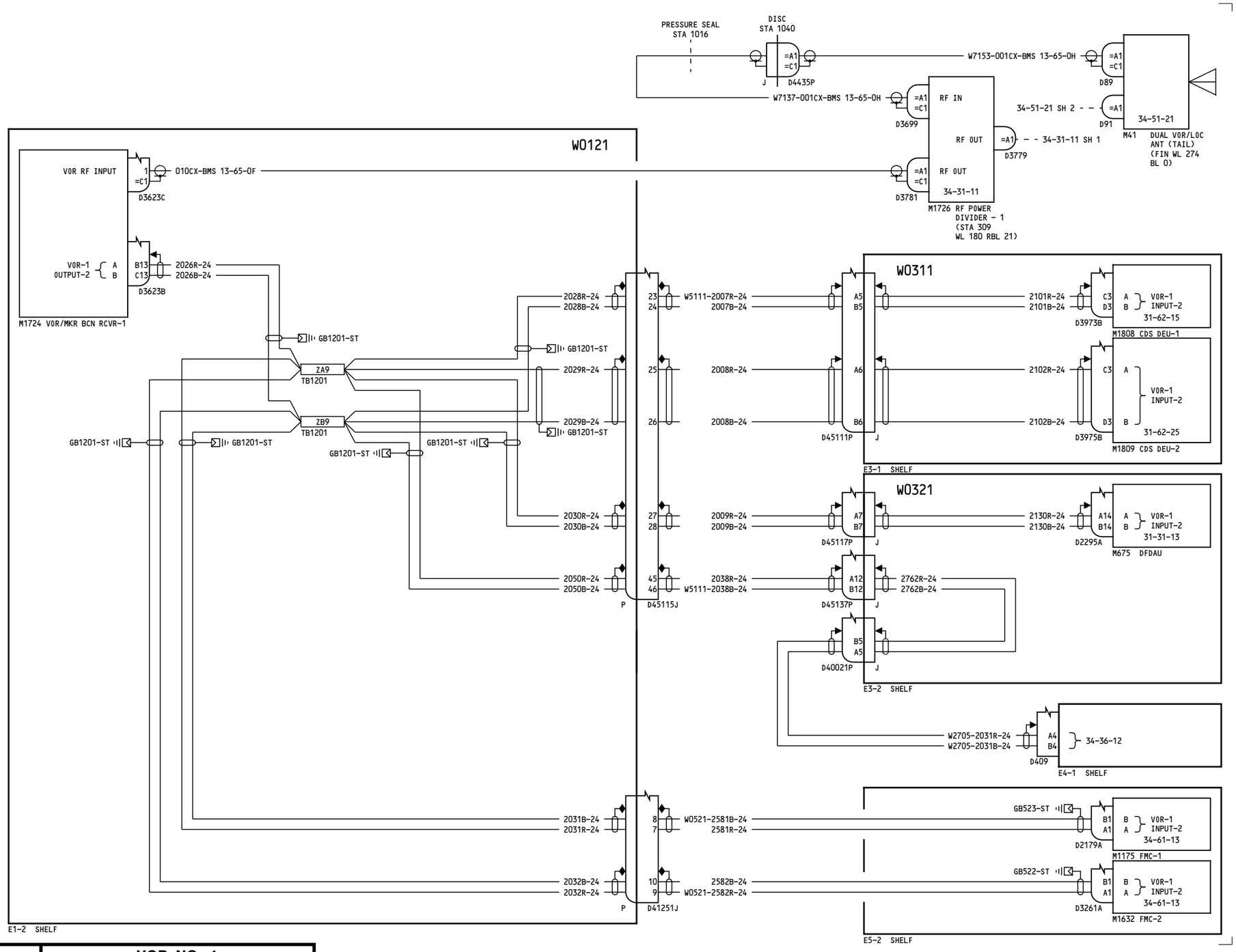

YT120, YT130-YT133	VOR NO. 1
	D280A351

34-51-11

Page 2
Sheet 2
Jun 21/2016

BOEING PROPRIETARY - Copyright © - Unpublished Work - See title page for details.

11

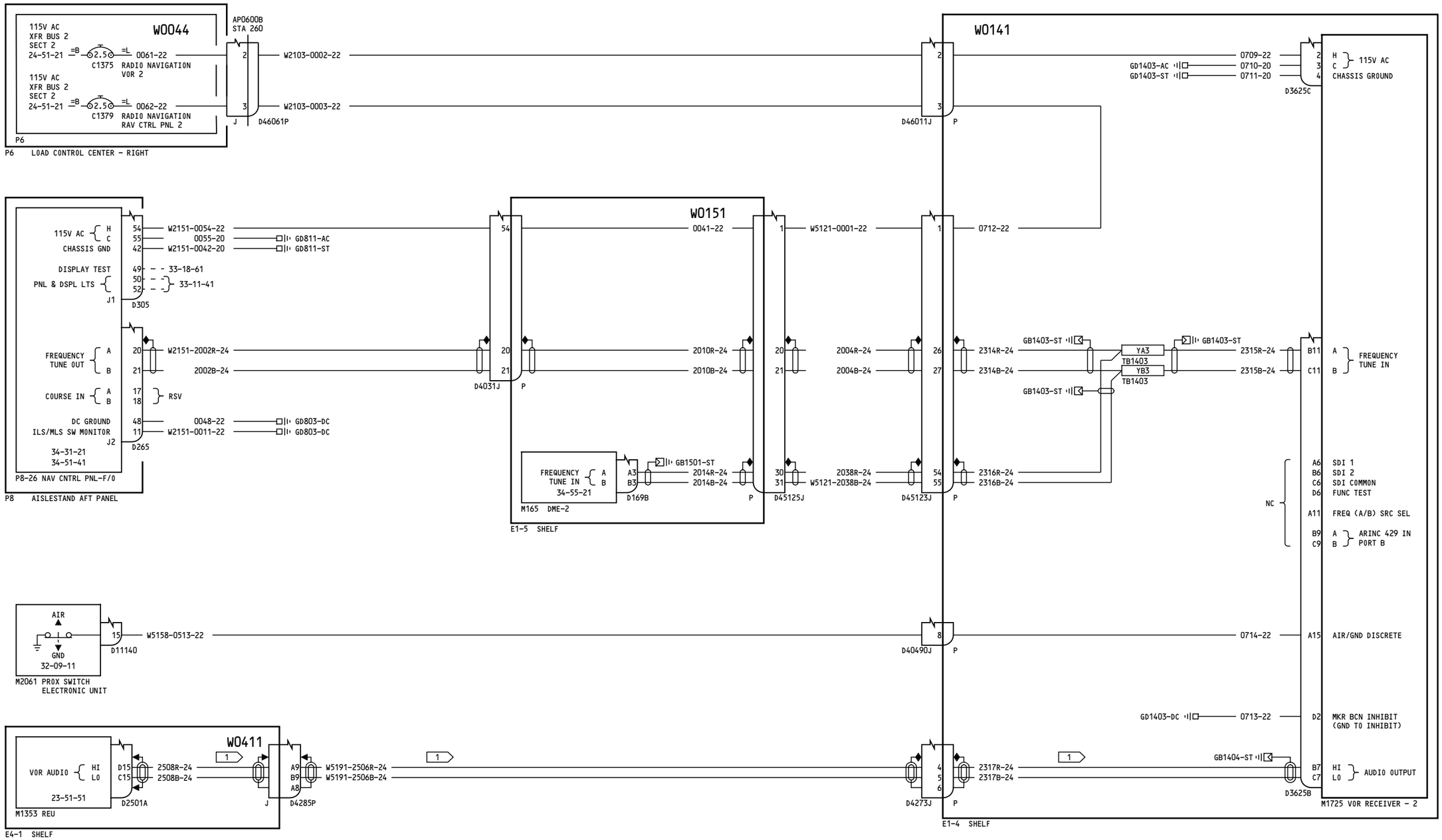

NOTES:

1 DOUBLE SHIELDED 24 GAUGE TWISTED PAIR, SHIELDS ARE ISOLATED FROM EACH OTHER.

YT101-YT119, YT126-YT129	**VOR NO. 2**
	D280A351

BOEING PROPRIETARY - Copyright © - Unpublished Work - See title page for details.

34-51-21

Page 1
Sheet 1
Jun 21/2016

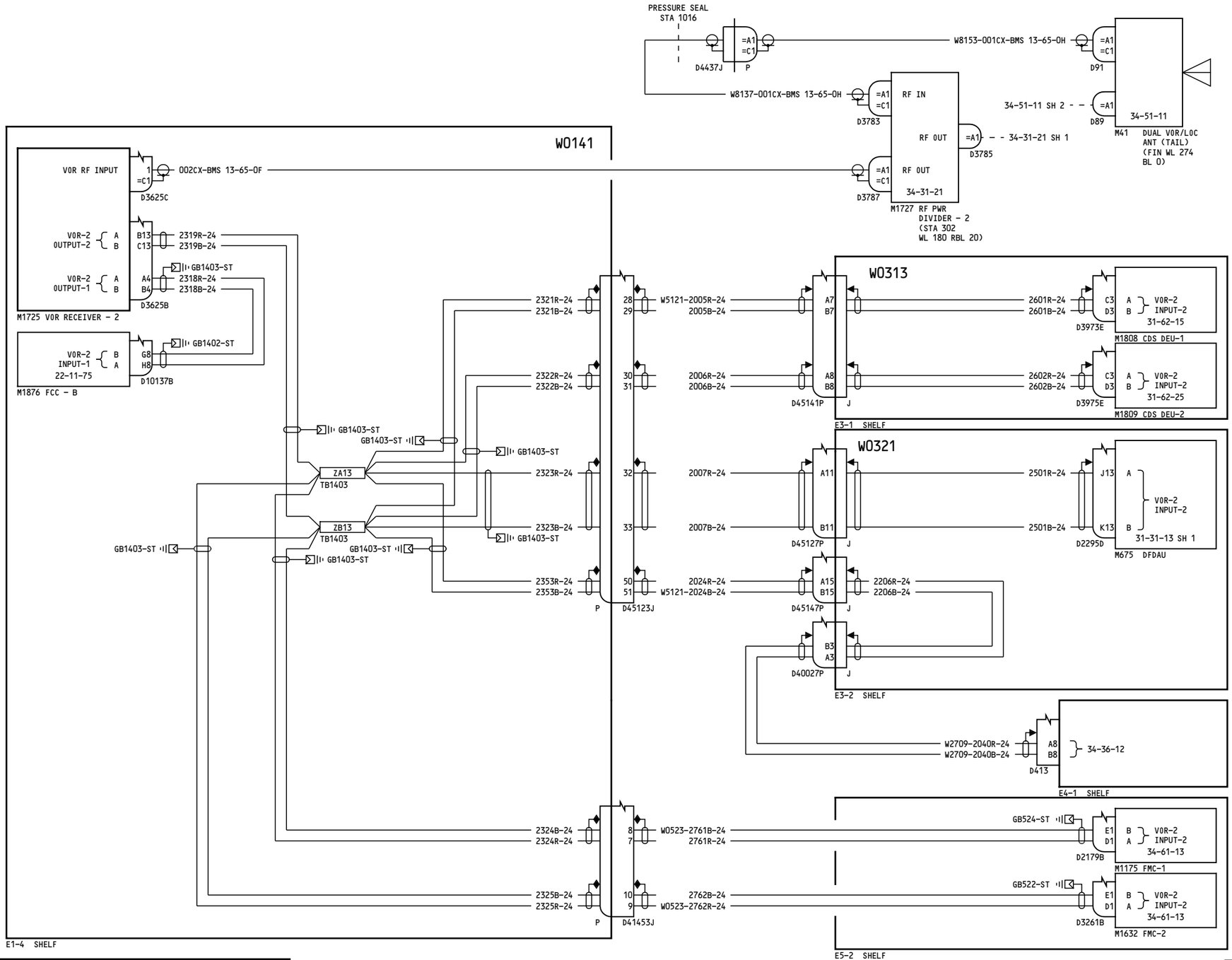

YT101-YT119, YT126-YT129	VOR NO. 2
	D280A351

34-51-21

Page 1
Sheet 2
Jun 21/2016

BOEING PROPRIETARY - Copyright © - Unpublished Work - See title page for details.

10

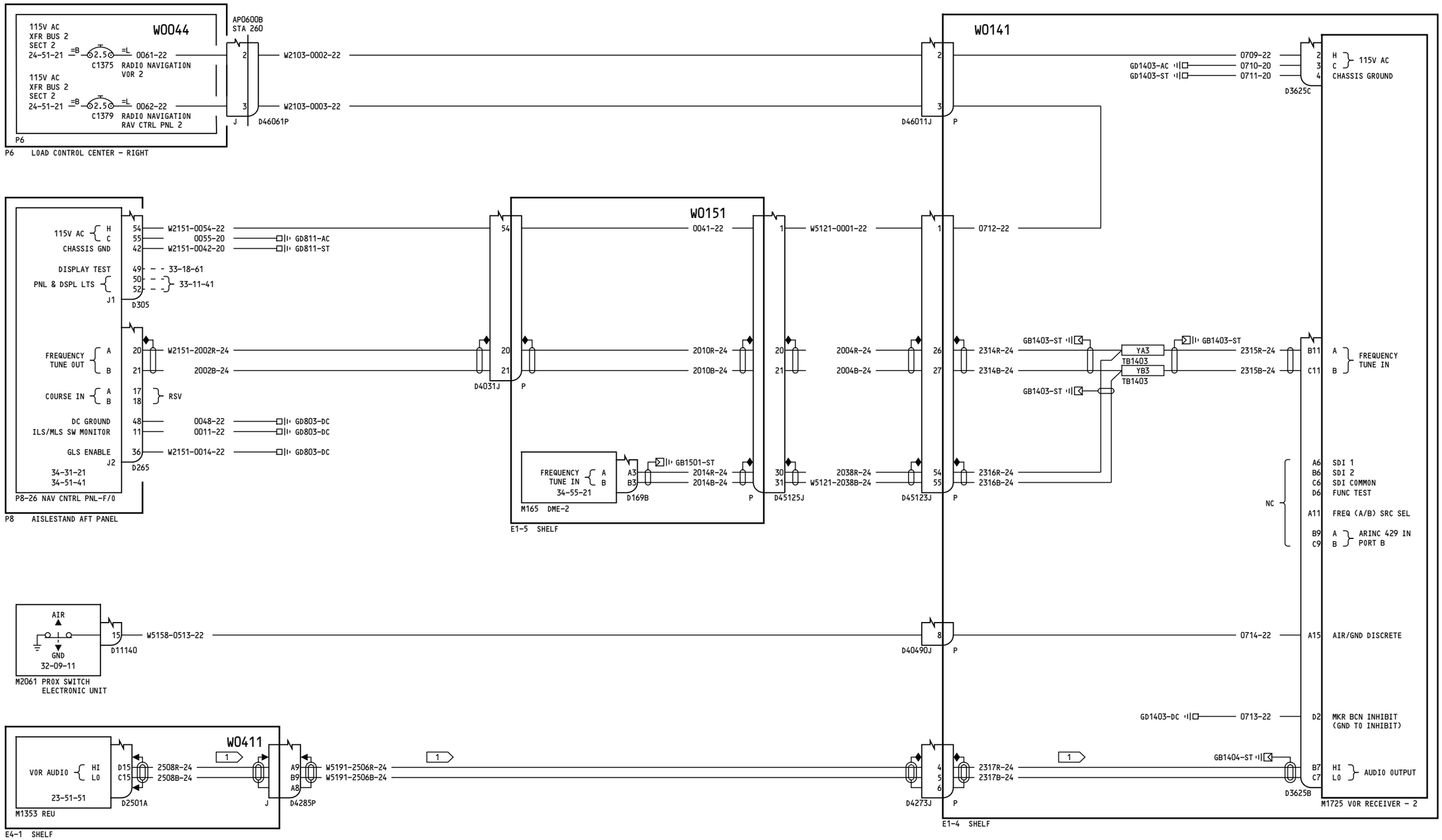

NOTES:

1 DOUBLE SHIELDED 24 GAUGE TWISTED PAIR, SHIELDS ARE ISOLATED FROM EACH OTHER.

YT120, YT130-YT133	**VOR NO. 2**
	D280A351

BOEING PROPRIETARY - Copyright © - Unpublished Work - See title page for details.

34-51-21
Page 2
Sheet 1
Jun 21/2016

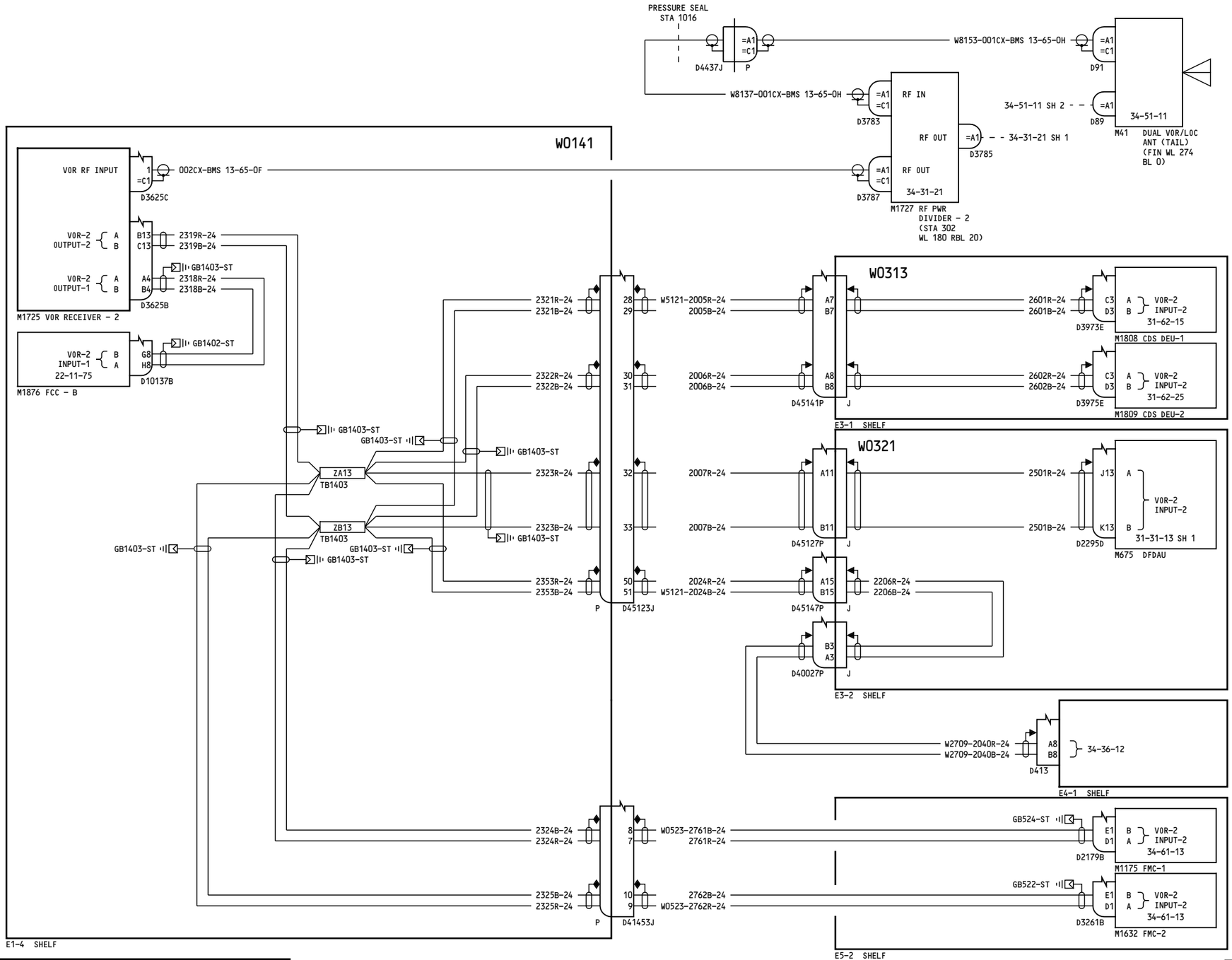

YT120, YT130-YT133	VOR NO. 2
	D280A351

34-51-21

Page 2
Sheet 2
Jun 21/2016

BOEING PROPRIETARY - Copyright © - Unpublished Work - See title page for details.

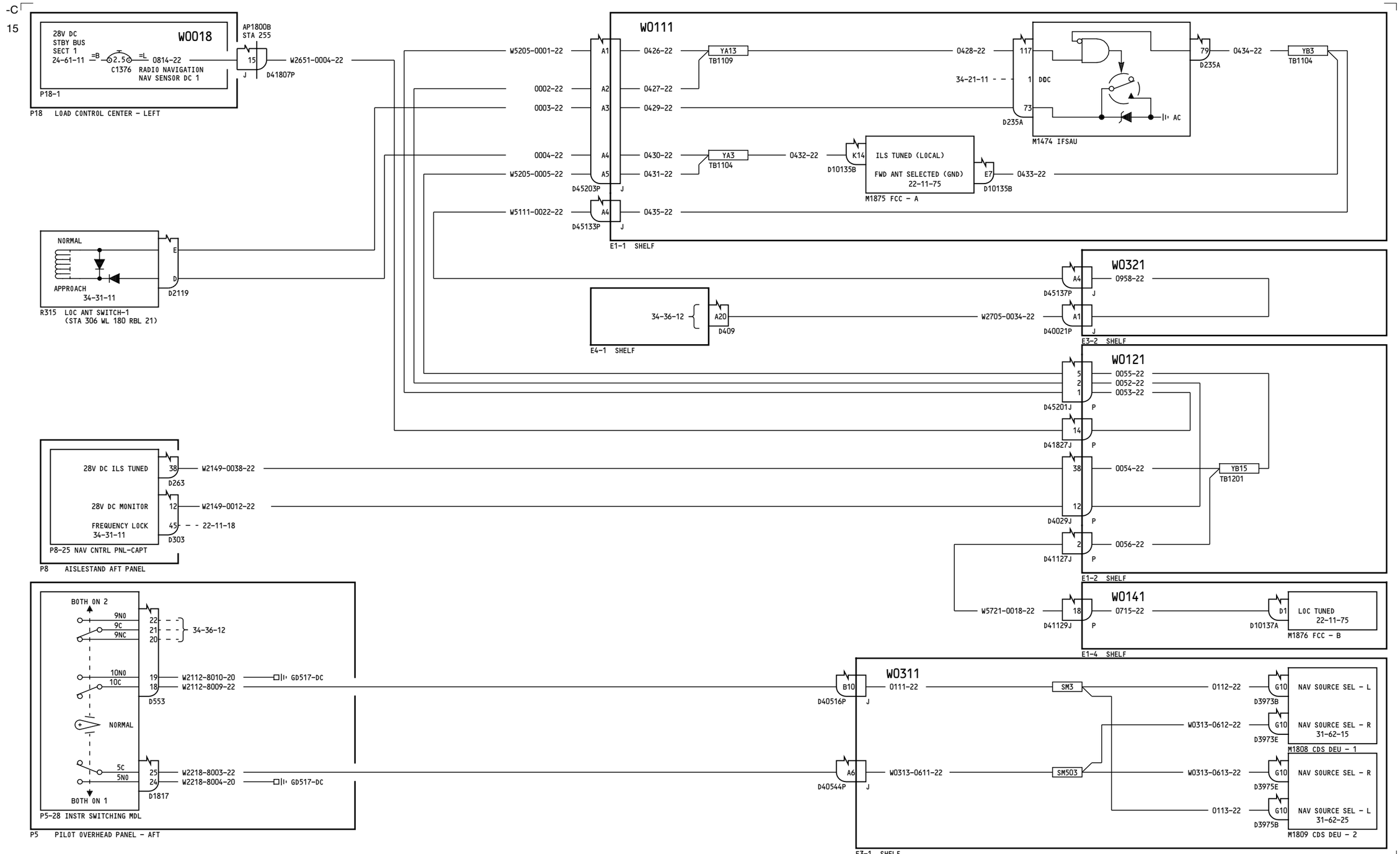

ALL

VOR/ILS INSTRUMENT TRANSFER SWITCHING

D280A351

BOEING PROPRIETARY - Copyright © - Unpublished Work - See title page for details.

34-51-41

Page 1
Sheet 1
Jun 21/2016

20

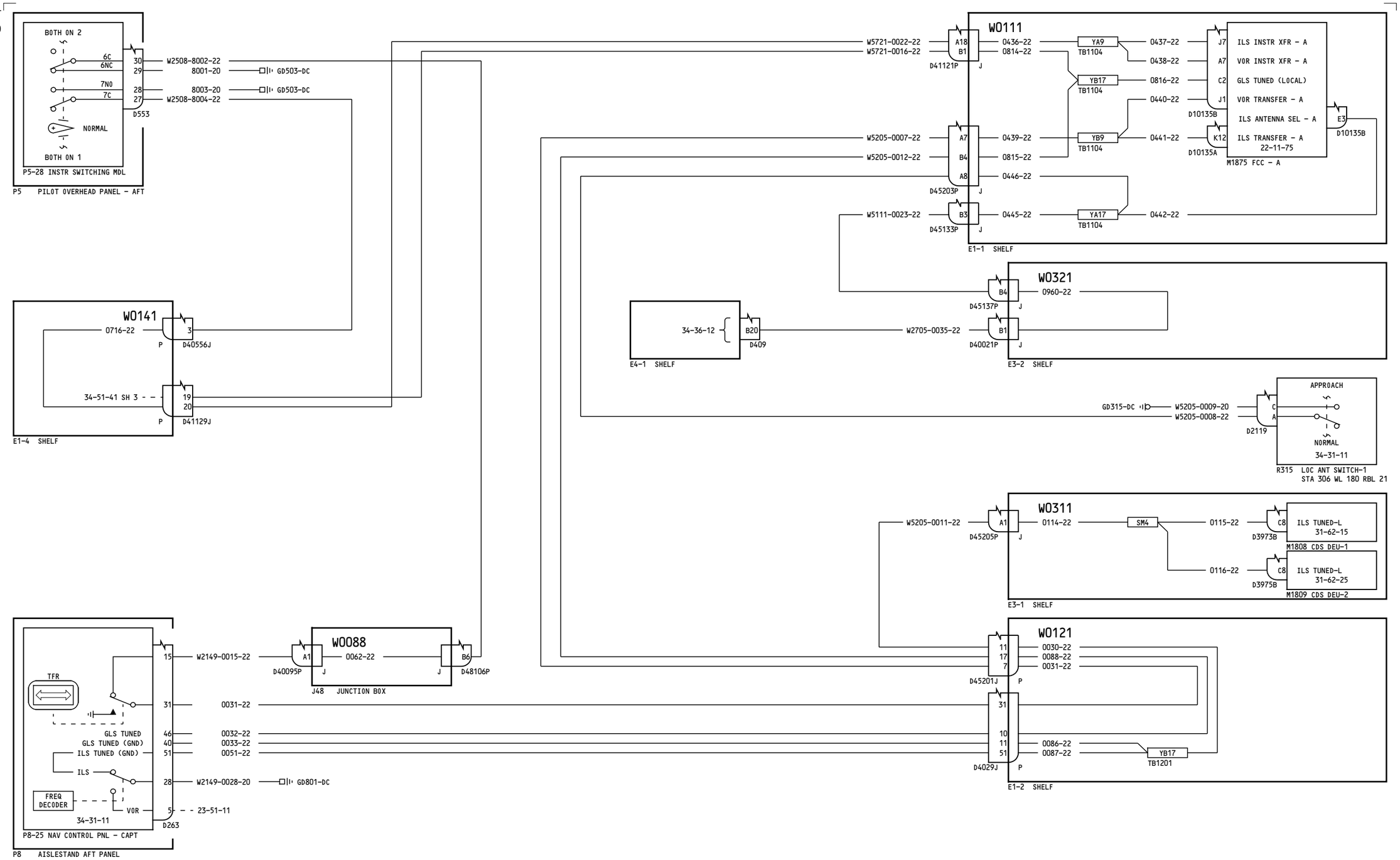

ALL

VOR/ILS INSTRUMENT TRANSFER SWITCHING

D280A351

34-51-41

Page 1
Sheet 2
Jun 21/2016

34-51-41

Page 1
Sheet 2
Jun 21/2016

BOEING PROPRIETARY - Copyright © - Unpublished Work - See title page for details.

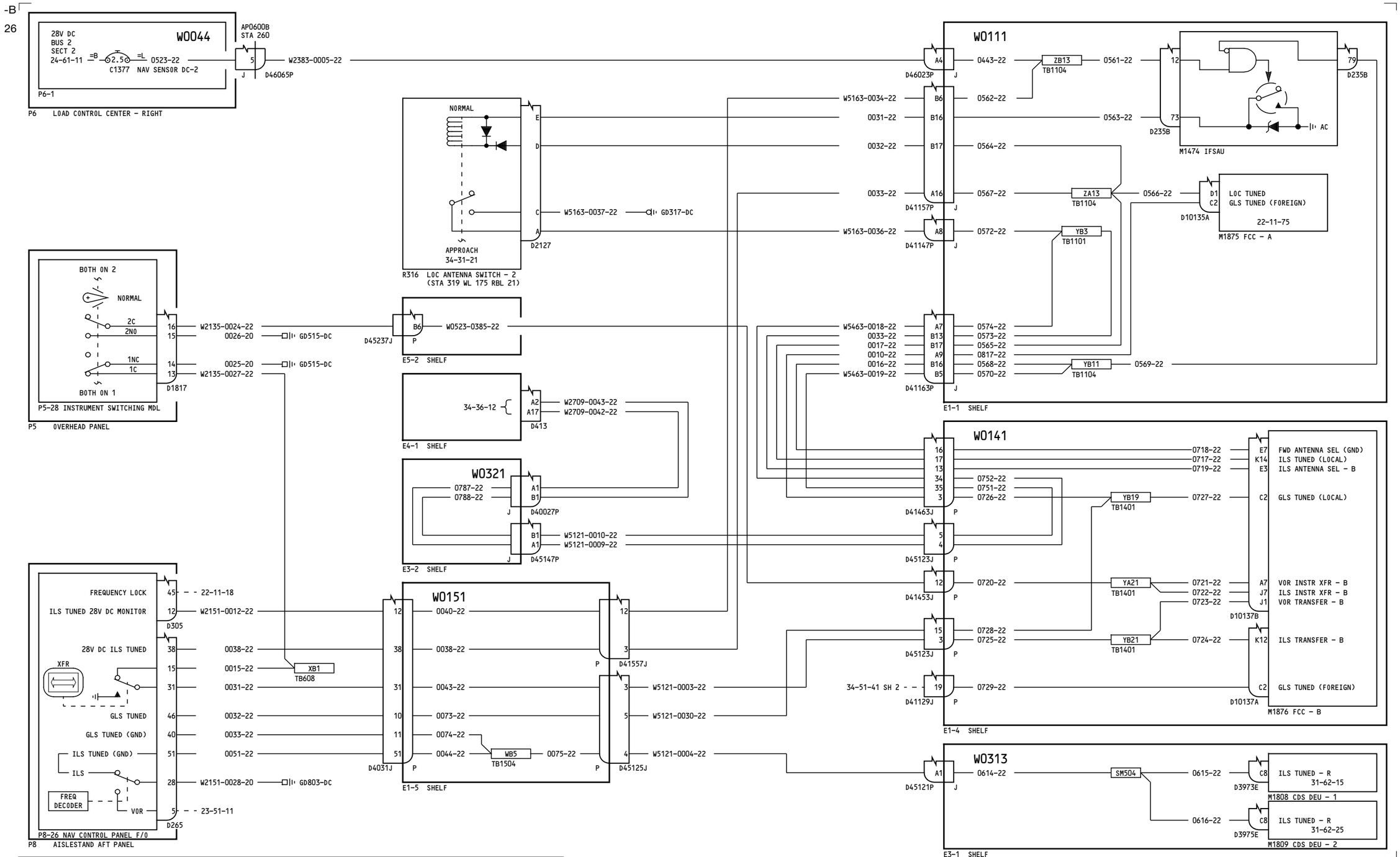

ALL

VOR/ILS INSTRUMENT TRANSFER SWITCHING

D280A351

34-51-41

Page 1
Sheet 3
Jun 21/2016

BOEING PROPRIETARY - Copyright © - Unpublished Work - See title page for details.

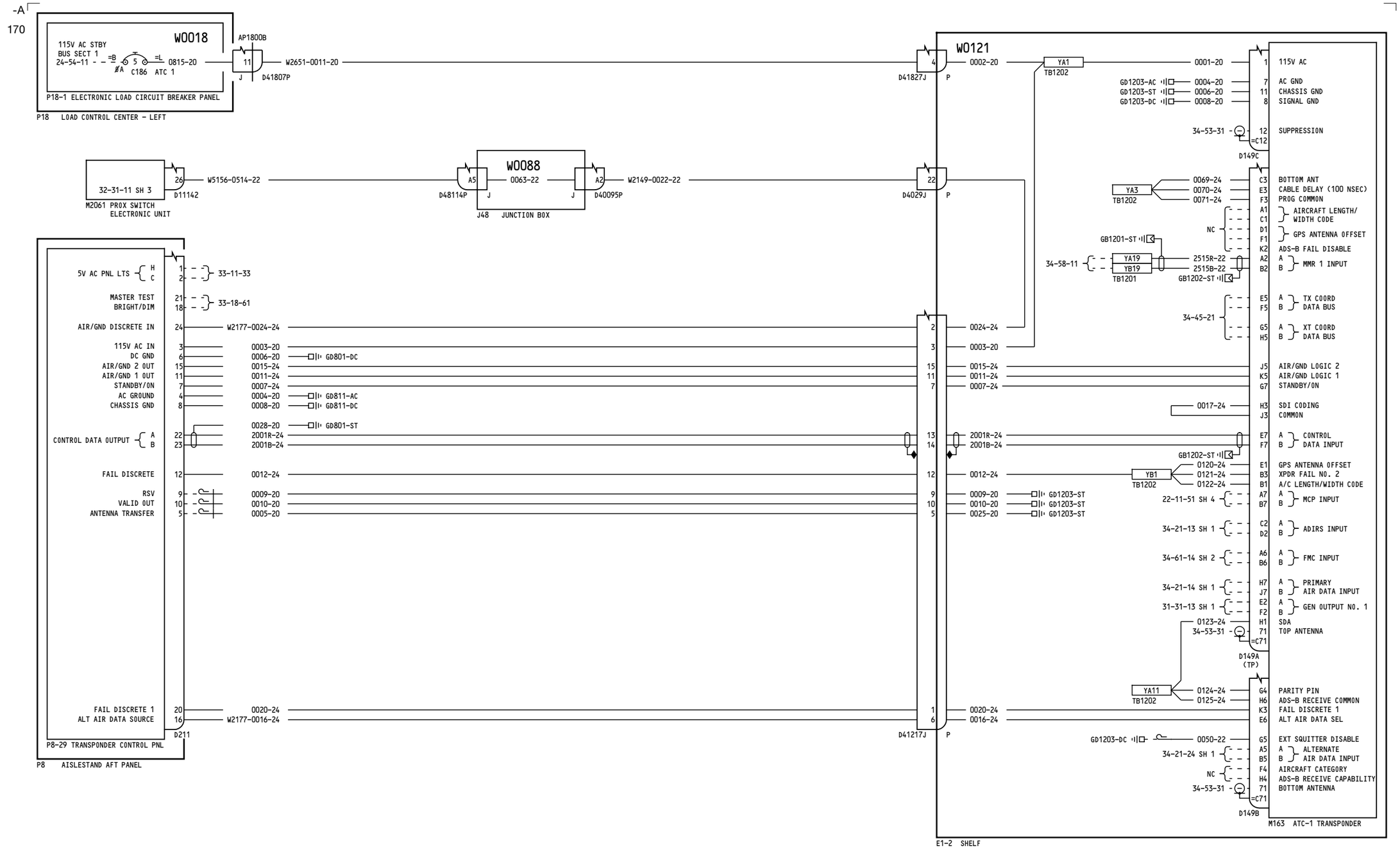

YT101-YT103

ATC TRANSPONDER 1

D280A351

34-53-11

Page 1
Sheet 1
Aug 15/2013

BOEING PROPRIETARY - Copyright © - Unpublished Work - See title page for details.

AB
564

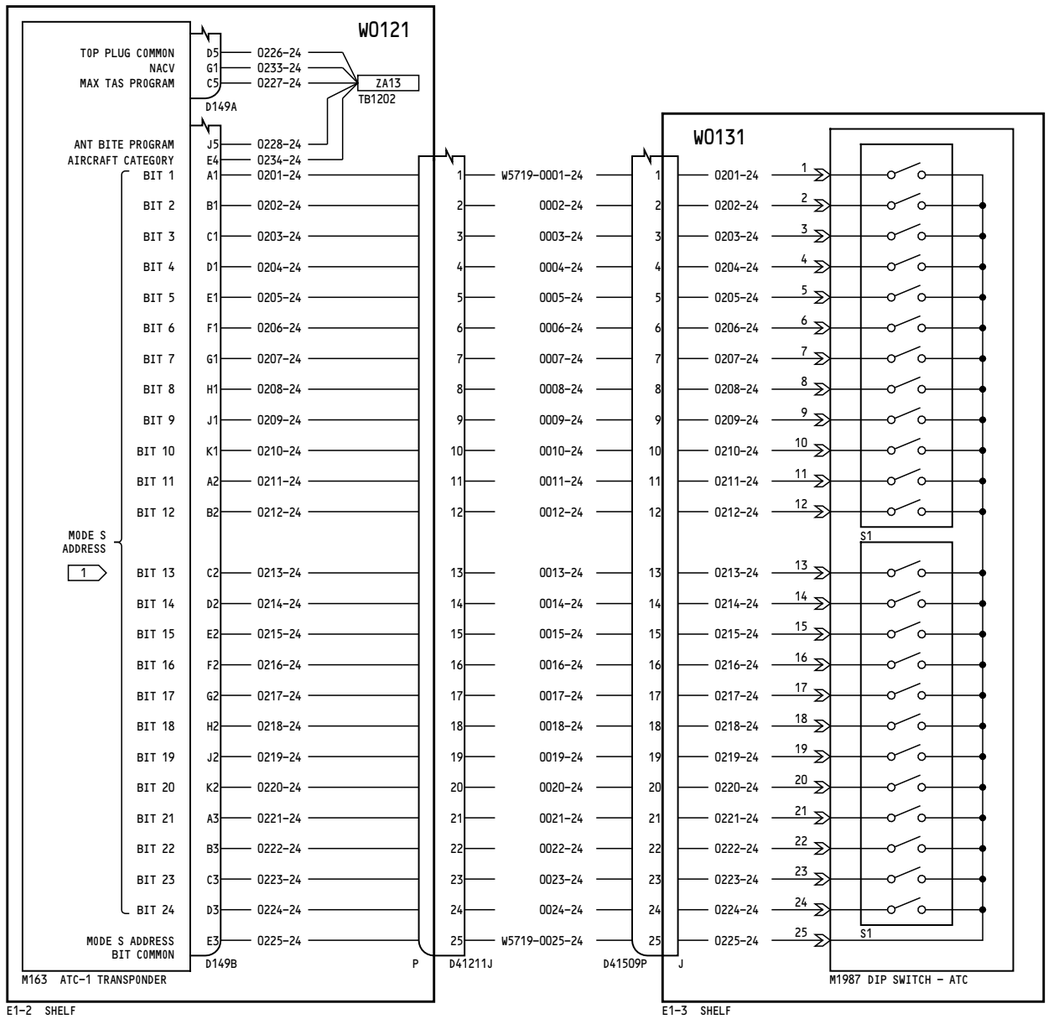

1

ADDRESS BIT			M1987																							
			1	2	3	4	5	6	7	8	9	10	11	12	13	14	15	16	17	18	19	20	21	22	23	24
AIRPLANE	MODE S CODE		D149B AND M1987S1																							
	REGISTRY	OCTAL	A1	B1	C1	D1	E1	F1	G1	H1	J1	K1	A2	B2	C2	D2	E2	F2	G2	H2	J2	K2	A3	B3	C3	D3
YT101	VP-BRF	2044 1334	0	1	0	0	0	0	1	0	0	1	0	0	0	0	1	0	1	1	0	1	1	1	0	0
YT102	VP-BRH	2044 1340	0	1	0	0	0	0	1	0	0	1	0	0	0	0	1	0	1	1	1	0	0	0	0	0
YT103	VP-BRR	2044 1352	0	1	0	0	0	0	1	0	0	1	0	0	0	0	1	0	1	1	1	0	1	0	1	0
YT104	VP-BZA	2044 1160	0	1	0	0	0	0	1	0	0	1	0	0	0	0	1	0	0	1	1	1	0	0	0	0
YT105	VP-BZB	2044 1356	0	1	0	0	0	0	1	0	0	1	0	0	0	0	1	0	1	1	1	0	1	1	1	0
YT106	VP-BON	2044 1362	0	1	0	0	0	0	1	0	0	1	0	0	0	0	1	0	1	1	1	1	0	0	1	0
YT107	VQ-BVO	2044 1725	0	1	0	0	0	0	1	0	0	1	0	0	0	0	1	1	1	1	0	1	0	1	0	1
YT108	VQ-BVP	2044 1726	0	1	0	0	0	0	1	0	0	1	0	0	0	0	1	1	1	1	0	1	0	1	1	0
YT109	VQ-BWA	2044 1742	0	1	0	0	0	0	1	0	0	1	0	0	0	0	1	1	1	1	1	0	0	0	1	0
YT110	VQ-BWB	2044 1756	0	1	0	0	0	0	1	0	0	1	0	0	0	0	1	1	1	1	1	0	1	1	1	0
YT111	VQ-BWC	2044 1757	0	1	0	0	0	0	1	0	0	1	0	0	0	0	1	1	1	1	1	0	1	1	1	1
YT112	VQ-BWD	2044 1760	0	1	0	0	0	0	1	0	0	1	0	0	0	0	1	1	1	1	1	1	0	0	0	0
YT113	VQ-BWE	2044 1773	0	1	0	0	0	0	1	0	0	1	0	0	0	0	1	1	1	1	1	1	1	0	1	1
YT114	VQ-BWF	2044 1774	0	1	0	0	0	0	1	0	0	1	0	0	0	0	1	1	1	1	1	1	1	1	0	0
YT115	VP-BCD	2044 1400	0	1	0	0	0	0	1	0	0	1	0	0	0	0	1	1	0	0	0	0	0	0	0	0
YT116	VP-BCF	2044 1401	0	1	0	0	0	0	1	0	0	1	0	0	0	0	1	1	0	0	0	0	0	0	0	1
YT117	VP-BCG	2044 1402	0	1	0	0	0	0	1	0	0	1	0	0	0	0	1	1	0	0	0	0	0	0	1	0
YT118	VP-BGG	2044 1422	0	1	0	0	0	0	1	0	0	1	0	0	0	0	1	1	0	0	0	1	0	0	1	0
YT119	VP-BGI	2044 1423	0	1	0	0	0	0	1	0	0	1	0	0	0	0	1	1	0	0	0	1	0	0	1	1
YT126	VQ-BVV	2044 1724	0	1	0	0	0	0	1	0	0	1	0	0	0	0	1	1	1	1	0	1	0	1	0	0
YT127	VQ-BVU	2044 1723	0	1	0	0	0	0	1	0	0	1	0	0	0	0	1	1	1	1	0	1	0	0	1	1
YT128	VQ-BWG	2044 1750	0	1	0	0	0	0	1	0	0	1	0	0	0	0	1	1	1	1	1	0	1	0	0	0
YT129	VQ-BWH	2044 1751	0	1	0	0	0	0	1	0	0	1	0	0	0	0	1	1	1	1	1	0	1	0	0	1
YT130	VQ-BWI	2044 1761	0	1	0	0	0	0	1	0	0	1	0	0	0	0	1	1	1	1	1	1	0	0	0	1
YT131	VQ-BWJ	2044 1762	0	1	0	0	0	0	1	0	0	1	0	0	0	0	1	1	1	1	1	1	0	0	1	0

NOTES:

1 SEE CHART FOR SWITCH POSITION
LOGIC "1" SWITCH IS ON (CLOSED)
LOGIC "0" SWITCH IS OFF (OPEN)

YT101-YT103

ATC TRANSPONDER 1

D280A351

34-53-11
Page 1
Sheet 2
Jun 21/2016

BOEING PROPRIETARY - Copyright © - Unpublished Work - See title page for details.

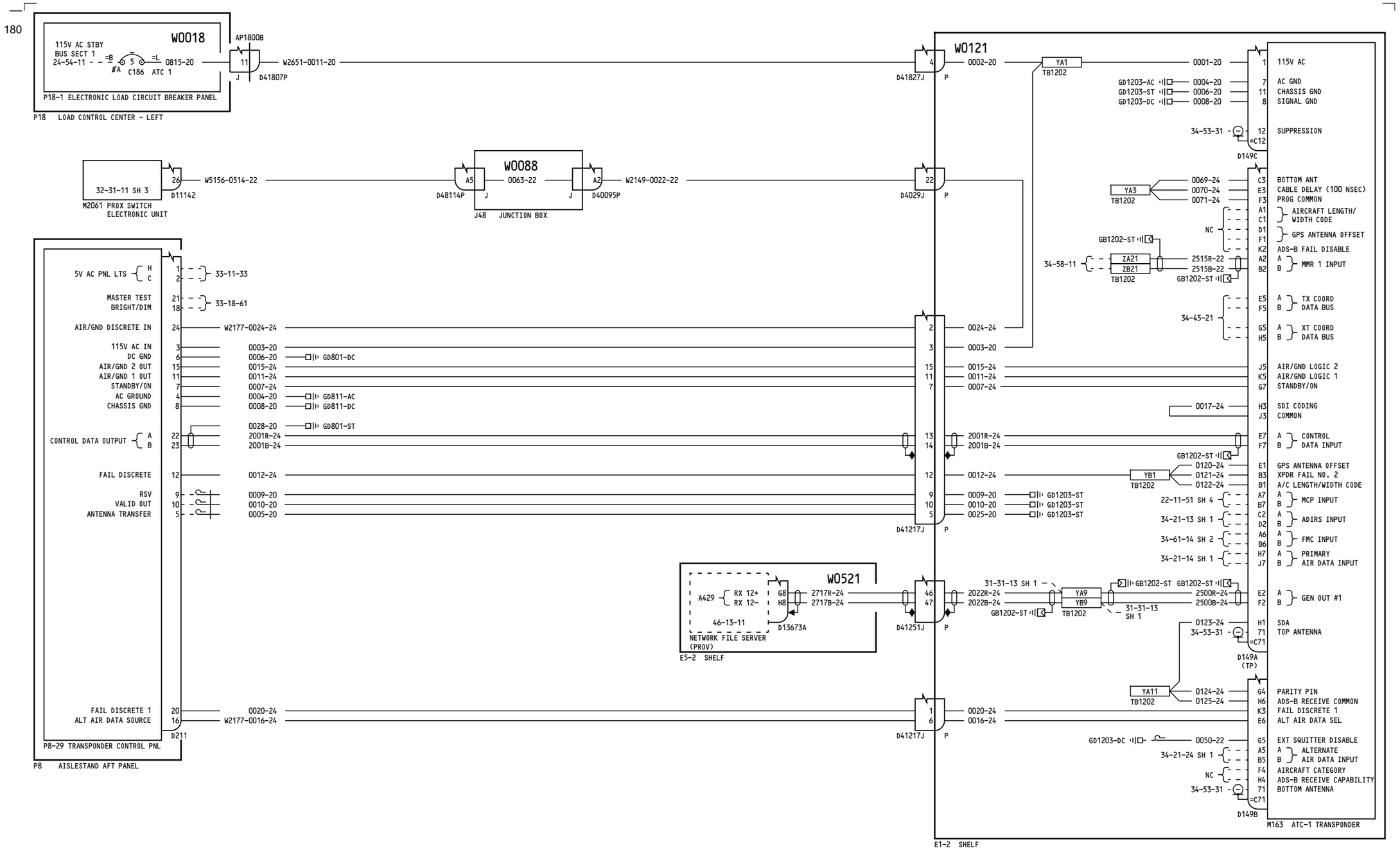

YT104-YT105, YT126-YT133	ATC TRANSPONDER 1
	D280A351

BOEING PROPRIETARY - Copyright © - Unpublished Work - See title page for details.

34-53-11
Page 2
Sheet 1
Jun 21/2016

AB
564

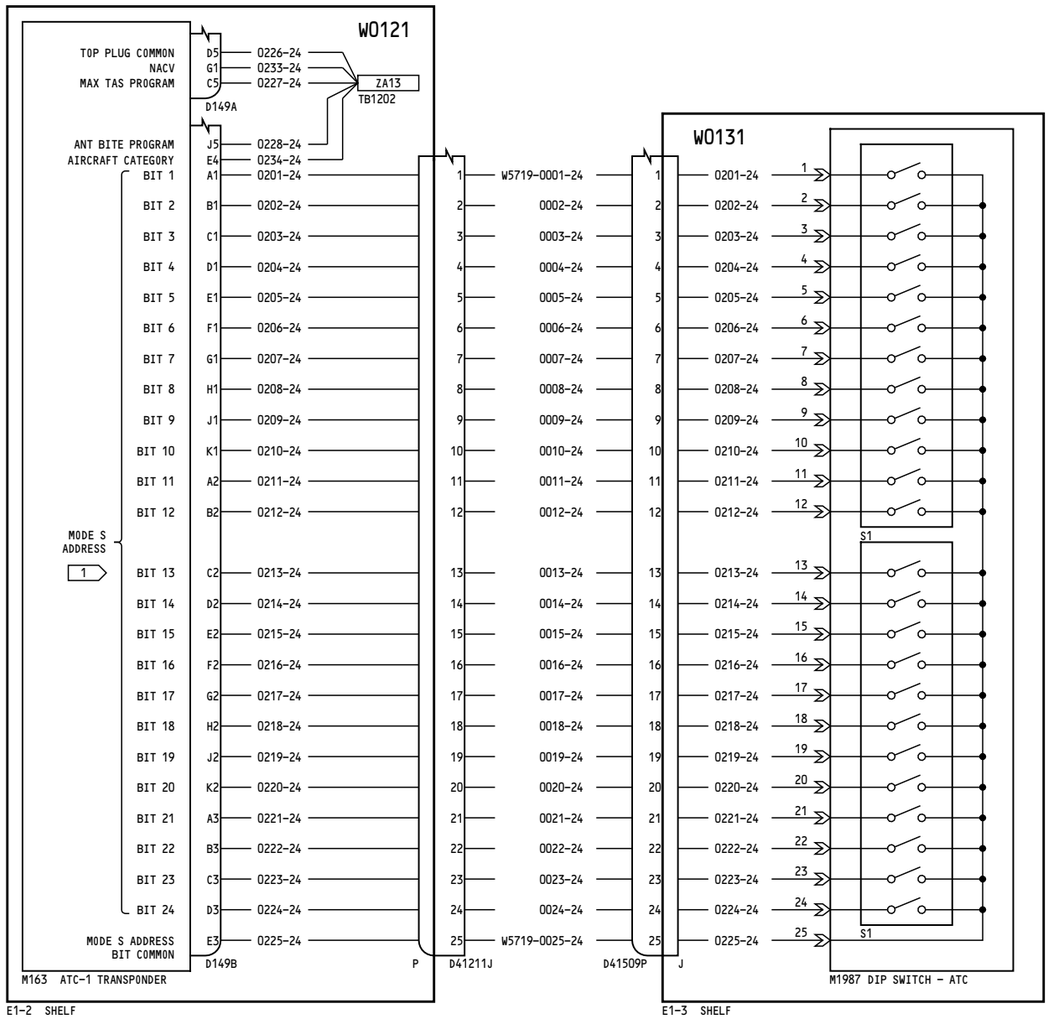

1

ADDRESS BIT			M1987																							
			1	2	3	4	5	6	7	8	9	10	11	12	13	14	15	16	17	18	19	20	21	22	23	24
AIRPLANE	MODE S CODE		D149B AND M1987S1																							
	REGISTRY	OCTAL	A1	B1	C1	D1	E1	F1	G1	H1	J1	K1	A2	B2	C2	D2	E2	F2	G2	H2	J2	K2	A3	B3	C3	D3
YT101	VP-BRF	2044 1334	0	1	0	0	0	0	1	0	0	1	0	0	0	0	1	0	1	1	0	1	1	1	0	0
YT102	VP-BRH	2044 1340	0	1	0	0	0	0	1	0	0	1	0	0	0	0	1	0	1	1	1	0	0	0	0	0
YT103	VP-BRR	2044 1352	0	1	0	0	0	0	1	0	0	1	0	0	0	0	1	0	1	1	1	0	1	0	1	0
YT104	VP-BZA	2044 1160	0	1	0	0	0	0	1	0	0	1	0	0	0	0	1	0	0	1	1	1	0	0	0	0
YT105	VP-BZB	2044 1356	0	1	0	0	0	0	1	0	0	1	0	0	0	0	1	0	1	1	1	0	1	1	1	0
YT106	VP-BON	2044 1362	0	1	0	0	0	0	1	0	0	1	0	0	0	0	1	0	1	1	1	1	0	0	1	0
YT107	VQ-BVO	2044 1725	0	1	0	0	0	0	1	0	0	1	0	0	0	0	1	1	1	1	0	1	0	1	0	1
YT108	VQ-BVP	2044 1726	0	1	0	0	0	0	1	0	0	1	0	0	0	0	1	1	1	1	0	1	0	1	1	0
YT109	VQ-BWA	2044 1742	0	1	0	0	0	0	1	0	0	1	0	0	0	0	1	1	1	1	1	0	0	0	1	0
YT110	VQ-BWB	2044 1756	0	1	0	0	0	0	1	0	0	1	0	0	0	0	1	1	1	1	1	0	1	1	1	0
YT111	VQ-BWC	2044 1757	0	1	0	0	0	0	1	0	0	1	0	0	0	0	1	1	1	1	1	0	1	1	1	1
YT112	VQ-BWD	2044 1760	0	1	0	0	0	0	1	0	0	1	0	0	0	0	1	1	1	1	1	1	0	0	0	0
YT113	VQ-BWE	2044 1773	0	1	0	0	0	0	1	0	0	1	0	0	0	0	1	1	1	1	1	1	1	0	1	1
YT114	VQ-BWF	2044 1774	0	1	0	0	0	0	1	0	0	1	0	0	0	0	1	1	1	1	1	1	1	1	0	0
YT115	VP-BCD	2044 1400	0	1	0	0	0	0	1	0	0	1	0	0	0	0	1	1	0	0	0	0	0	0	0	0
YT116	VP-BCF	2044 1401	0	1	0	0	0	0	1	0	0	1	0	0	0	0	1	1	0	0	0	0	0	0	0	1
YT117	VP-BCG	2044 1402	0	1	0	0	0	0	1	0	0	1	0	0	0	0	1	1	0	0	0	0	0	0	1	0
YT118	VP-BGG	2044 1422	0	1	0	0	0	0	1	0	0	1	0	0	0	0	1	1	0	0	0	1	0	0	1	0
YT119	VP-BGI	2044 1423	0	1	0	0	0	0	1	0	0	1	0	0	0	0	1	1	0	0	0	1	0	0	1	1
YT126	VQ-BVV	2044 1724	0	1	0	0	0	0	1	0	0	1	0	0	0	0	1	1	1	1	0	1	0	1	0	0
YT127	VQ-BVU	2044 1723	0	1	0	0	0	0	1	0	0	1	0	0	0	0	1	1	1	1	0	1	0	0	1	1
YT128	VQ-BWG	2044 1750	0	1	0	0	0	0	1	0	0	1	0	0	0	0	1	1	1	1	1	0	1	0	0	0
YT129	VQ-BWH	2044 1751	0	1	0	0	0	0	1	0	0	1	0	0	0	0	1	1	1	1	1	0	1	0	0	1
YT130	VQ-BWI	2044 1761	0	1	0	0	0	0	1	0	0	1	0	0	0	0	1	1	1	1	1	1	0	0	0	1
YT131	VQ-BWJ	2044 1762	0	1	0	0	0	0	1	0	0	1	0	0	0	0	1	1	1	1	1	1	0	0	1	0

NOTES:

1 SEE CHART FOR SWITCH POSITION
LOGIC "1" SWITCH IS ON (CLOSED)
LOGIC "0" SWITCH IS OFF (OPEN)

YT104-YT105, YT126-YT133

ATC TRANSPONDER 1

D280A351

34-53-11
Page 2
Sheet 2
Jun 21/2016

BOEING PROPRIETARY - Copyright © - Unpublished Work - See title page for details.

-A
186

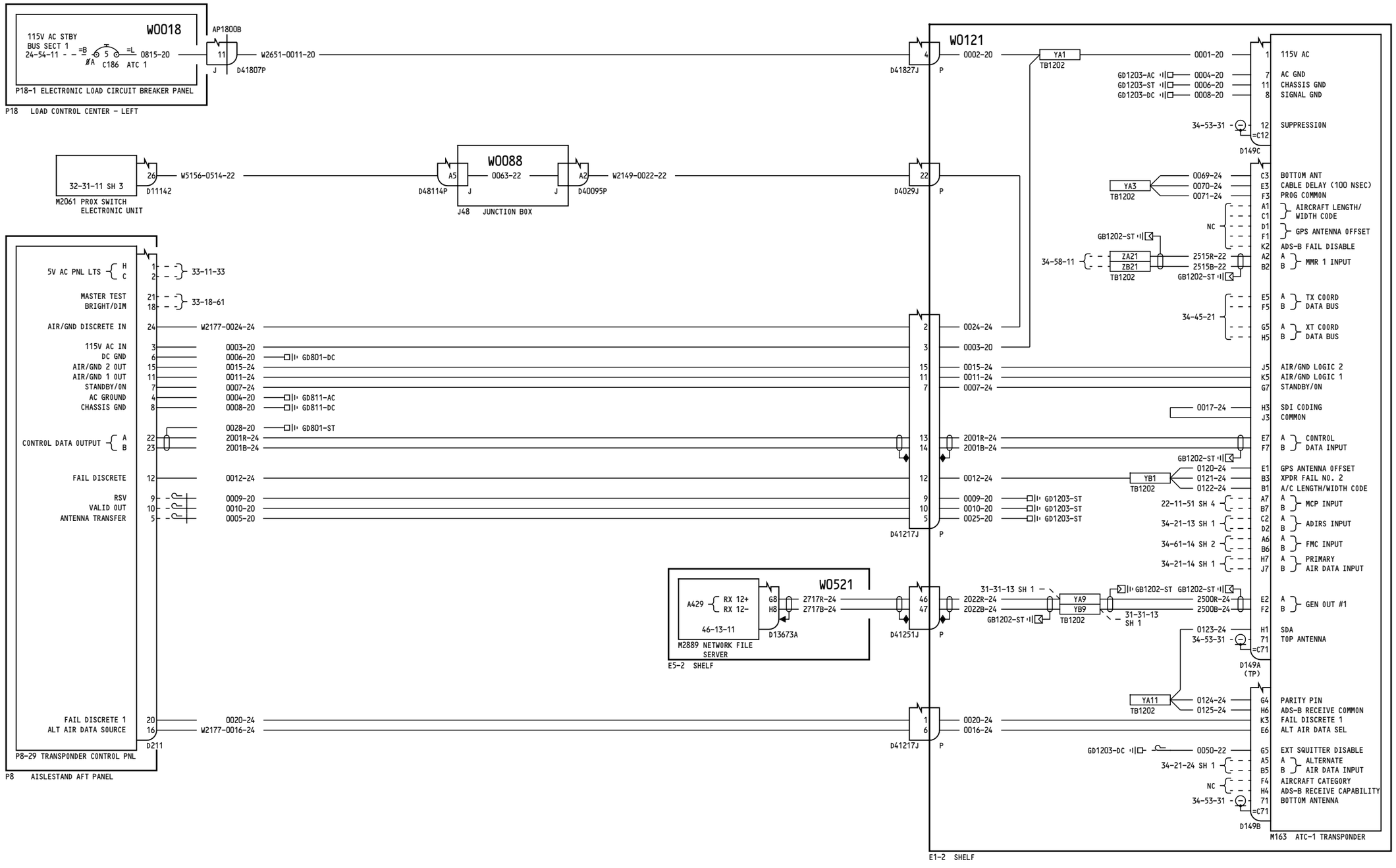

YT106-YT120	ATC TRANSPONDER 1
	D280A351

34-53-11
Page 3
Sheet 1
Mar 14/2016

BOEING PROPRIETARY - Copyright © - Unpublished Work - See title page for details.

AB
564

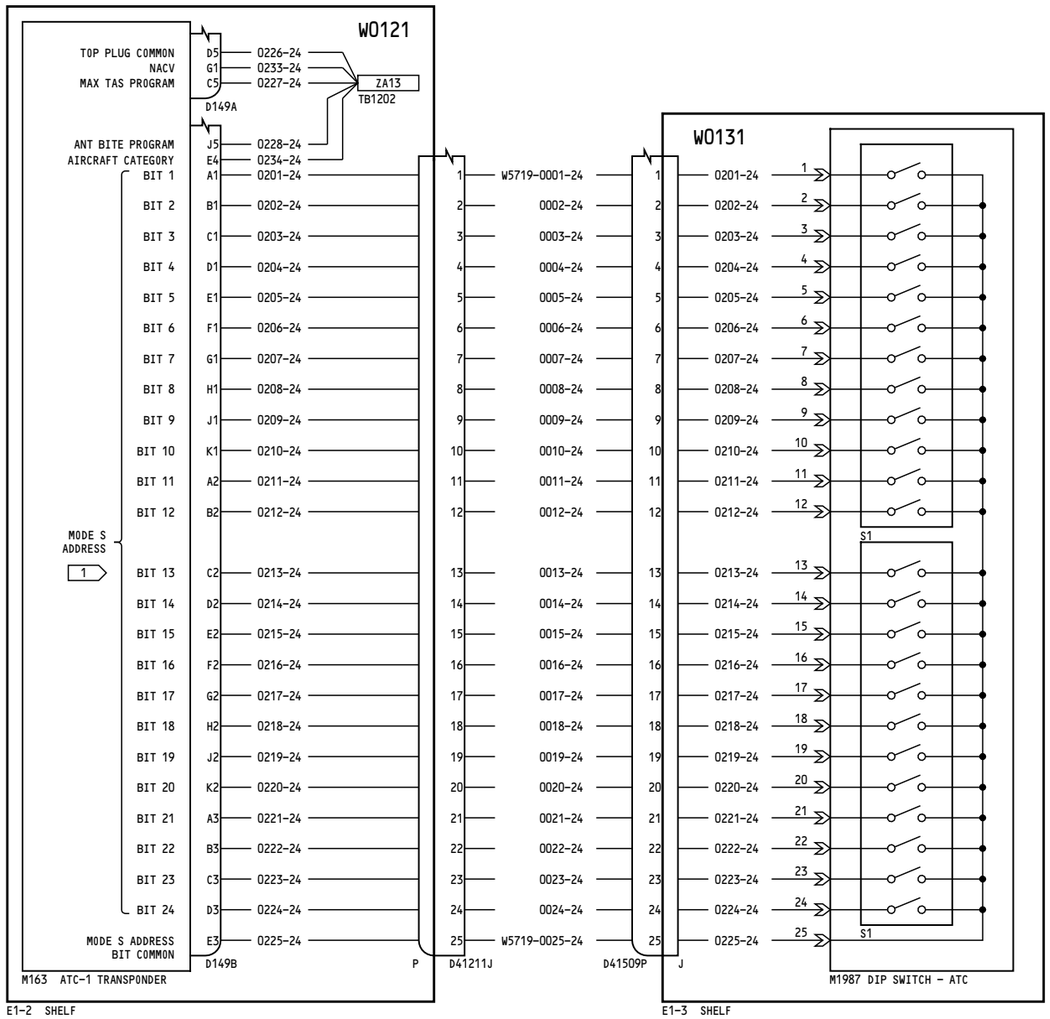

ADDRESS BIT			M1987																							
			1	2	3	4	5	6	7	8	9	10	11	12	13	14	15	16	17	18	19	20	21	22	23	24
AIRPLANE	MODE S CODE		D149B AND M1987S1																							
	REGISTRY	OCTAL	A1	B1	C1	D1	E1	F1	G1	H1	J1	K1	A2	B2	C2	D2	E2	F2	G2	H2	J2	K2	A3	B3	C3	D3
YT101	VP-BRF	2044 1334	0	1	0	0	0	0	1	0	0	1	0	0	0	0	1	0	1	1	0	1	1	1	0	0
YT102	VP-BRH	2044 1340	0	1	0	0	0	0	1	0	0	1	0	0	0	0	1	0	1	1	1	0	0	0	0	0
YT103	VP-BRR	2044 1352	0	1	0	0	0	0	1	0	0	1	0	0	0	0	1	0	1	1	1	0	1	0	1	0
YT104	VP-BZA	2044 1160	0	1	0	0	0	0	1	0	0	1	0	0	0	0	1	0	0	1	1	1	0	0	0	0
YT105	VP-BZB	2044 1356	0	1	0	0	0	0	1	0	0	1	0	0	0	0	1	0	1	1	1	0	1	1	1	0
YT106	VP-BON	2044 1362	0	1	0	0	0	0	1	0	0	1	0	0	0	0	1	0	1	1	1	1	0	0	1	0
YT107	VQ-BVO	2044 1725	0	1	0	0	0	0	1	0	0	1	0	0	0	0	1	1	1	1	0	1	0	1	0	1
YT108	VQ-BVP	2044 1726	0	1	0	0	0	0	1	0	0	1	0	0	0	0	1	1	1	1	0	1	0	1	1	0
YT109	VQ-BWA	2044 1742	0	1	0	0	0	0	1	0	0	1	0	0	0	0	1	1	1	1	1	0	0	0	1	0
YT110	VQ-BWB	2044 1756	0	1	0	0	0	0	1	0	0	1	0	0	0	0	1	1	1	1	1	0	1	1	1	0
YT111	VQ-BWC	2044 1757	0	1	0	0	0	0	1	0	0	1	0	0	0	0	1	1	1	1	1	0	1	1	1	1
YT112	VQ-BWD	2044 1760	0	1	0	0	0	0	1	0	0	1	0	0	0	0	1	1	1	1	1	1	0	0	0	0
YT113	VQ-BWE	2044 1773	0	1	0	0	0	0	1	0	0	1	0	0	0	0	1	1	1	1	1	1	1	0	1	1
YT114	VQ-BWF	2044 1774	0	1	0	0	0	0	1	0	0	1	0	0	0	0	1	1	1	1	1	1	1	1	0	0
YT115	VP-BCD	2044 1400	0	1	0	0	0	0	1	0	0	1	0	0	0	0	1	1	0	0	0	0	0	0	0	0
YT116	VP-BCF	2044 1401	0	1	0	0	0	0	1	0	0	1	0	0	0	0	1	1	0	0	0	0	0	0	0	1
YT117	VP-BCG	2044 1402	0	1	0	0	0	0	1	0	0	1	0	0	0	0	1	1	0	0	0	0	0	0	1	0
YT118	VP-BGG	2044 1422	0	1	0	0	0	0	1	0	0	1	0	0	0	0	1	1	0	0	0	1	0	0	1	0
YT119	VP-BGI	2044 1423	0	1	0	0	0	0	1	0	0	1	0	0	0	0	1	1	0	0	0	1	0	0	1	1
YT126	VQ-BVV	2044 1724	0	1	0	0	0	0	1	0	0	1	0	0	0	0	1	1	1	1	0	1	0	1	0	0
YT127	VQ-BVU	2044 1723	0	1	0	0	0	0	1	0	0	1	0	0	0	0	1	1	1	1	0	1	0	0	1	1
YT128	VQ-BWG	2044 1750	0	1	0	0	0	0	1	0	0	1	0	0	0	0	1	1	1	1	1	0	1	0	0	0
YT129	VQ-BWH	2044 1751	0	1	0	0	0	0	1	0	0	1	0	0	0	0	1	1	1	1	1	0	1	0	0	1
YT130	VQ-BWI	2044 1761	0	1	0	0	0	0	1	0	0	1	0	0	0	0	1	1	1	1	1	1	0	0	0	1
YT131	VQ-BWJ	2044 1762	0	1	0	0	0	0	1	0	0	1	0	0	0	0	1	1	1	1	1	1	0	0	1	0

NOTES:

1 SEE CHART FOR SWITCH POSITION
LOGIC "1" SWITCH IS ON (CLOSED)
LOGIC "0" SWITCH IS OFF (OPEN)

YT106-YT120

ATC TRANSPONDER 1

D280A351

34-53-11
Page 3
Sheet 2
Jun 21/2016

BOEING PROPRIETARY - Copyright © - Unpublished Work - See title page for details.

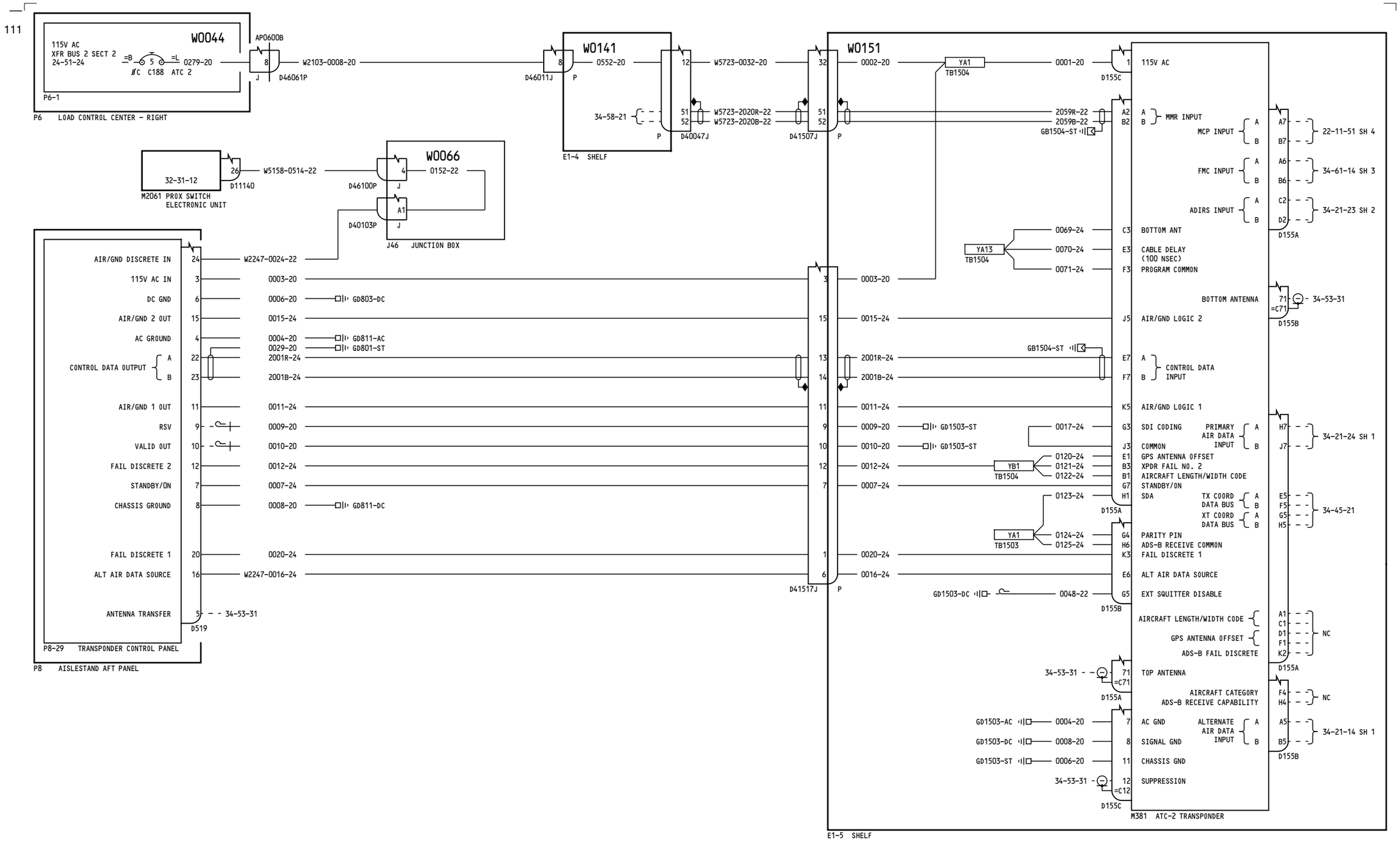

YT101-YT103	ATC TRANSPONDER 2
	D280A351

34-53-21
Page 1
Sheet 1
Aug 15/2013

BOEING PROPRIETARY - Copyright © - Unpublished Work - See title page for details.

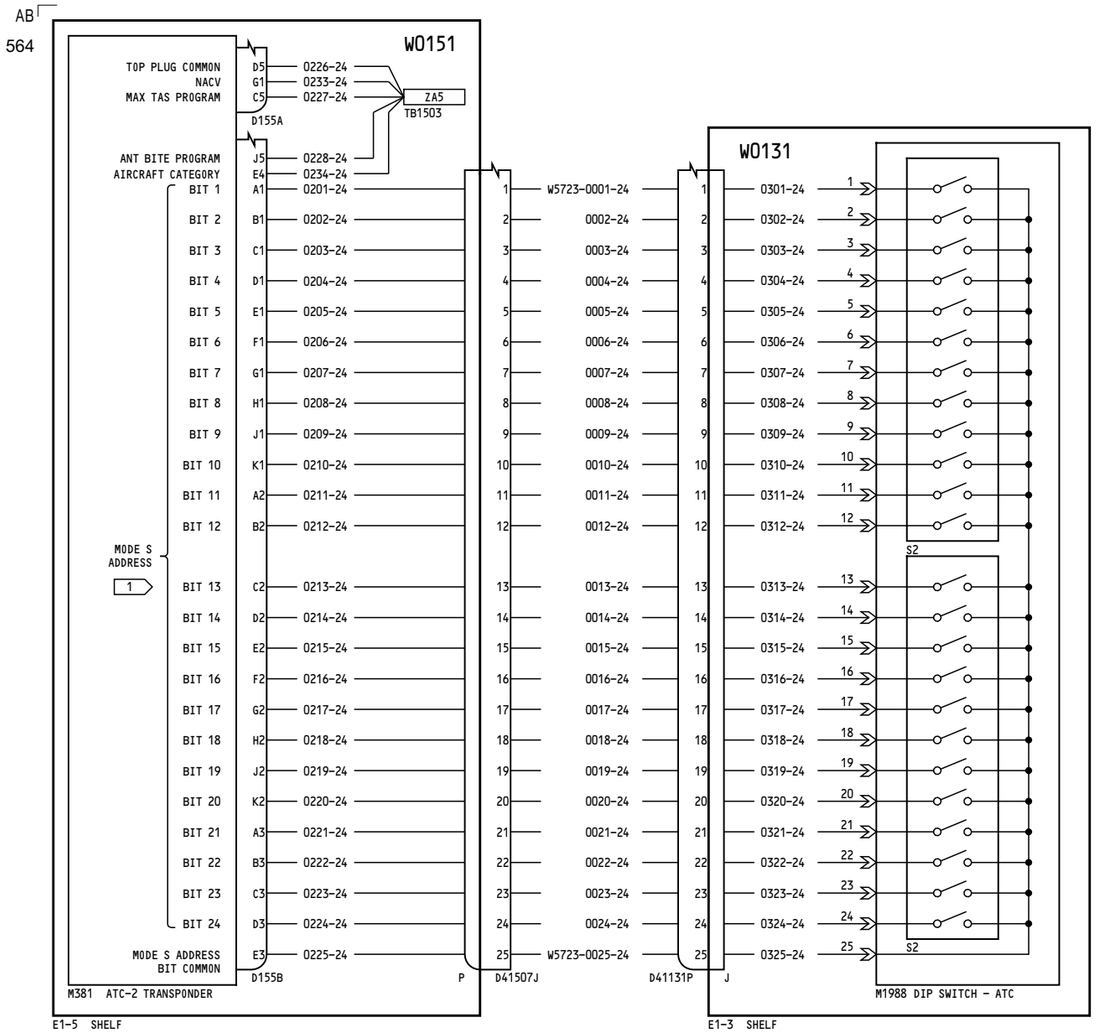

1

ADDRESS BIT			M1988																							
			1	2	3	4	5	6	7	8	9	10	11	12	13	14	15	16	17	18	19	20	21	22	23	24
AIRPLANE	MODE S CODE		D155B AND M1988S2																							
	REGISTRY	OCTAL	A1	B1	C1	D1	E1	F1	G1	H1	J1	K1	A2	B2	C2	D2	E2	F2	G2	H2	J2	K2	A3	B3	C3	D3
YT101	VP-BRF	2044 1334	0	1	0	0	0	0	1	0	0	1	0	0	0	0	1	0	1	1	0	1	1	1	0	0
YT102	VP-BRH	2044 1340	0	1	0	0	0	0	1	0	0	1	0	0	0	0	1	0	1	1	1	0	0	0	0	0
YT103	VP-BRR	2044 1352	0	1	0	0	0	0	1	0	0	1	0	0	0	0	1	0	1	1	1	0	1	0	1	0
YT104	VP-BZA	2044 1160	0	1	0	0	0	0	1	0	0	1	0	0	0	0	1	0	0	1	1	1	0	0	0	0
YT105	VP-BZB	2044 1356	0	1	0	0	0	0	1	0	0	1	0	0	0	0	1	0	1	1	1	0	1	1	1	0
YT106	VP-BON	2044 1362	0	1	0	0	0	0	1	0	0	1	0	0	0	0	1	0	1	1	1	1	0	0	1	0
YT107	VQ-BVO	2044 1725	0	1	0	0	0	0	1	0	0	1	0	0	0	0	1	1	1	1	0	1	0	1	0	1
YT108	VQ-BVP	2044 1726	0	1	0	0	0	0	1	0	0	1	0	0	0	0	1	1	1	1	0	1	0	1	1	0
YT109	VQ-BWA	2044 1742	0	1	0	0	0	0	1	0	0	1	0	0	0	0	1	1	1	1	1	0	0	0	1	0
YT110	VQ-BWB	2044 1756	0	1	0	0	0	0	1	0	0	1	0	0	0	0	1	1	1	1	1	0	1	1	1	0
YT111	VQ-BWC	2044 1757	0	1	0	0	0	0	1	0	0	1	0	0	0	0	1	1	1	1	1	0	1	1	1	1
YT112	VQ-BWD	2044 1760	0	1	0	0	0	0	1	0	0	1	0	0	0	0	1	1	1	1	1	1	0	0	0	0
YT113	VQ-BWE	2044 1773	0	1	0	0	0	0	1	0	0	1	0	0	0	0	1	1	1	1	1	1	1	0	1	1
YT114	VQ-BWF	2044 1774	0	1	0	0	0	0	1	0	0	1	0	0	0	0	1	1	1	1	1	1	1	1	0	0
YT115	VP-BCD	2044 1400	0	1	0	0	0	0	1	0	0	1	0	0	0	0	1	1	0	0	0	0	0	0	0	0
YT116	VP-BCF	2044 1401	0	1	0	0	0	0	1	0	0	1	0	0	0	0	1	1	0	0	0	0	0	0	0	1
YT117	VP-BCG	2044 1402	0	1	0	0	0	0	1	0	0	1	0	0	0	0	1	1	0	0	0	0	0	0	1	0
YT118	VP-BGG	2044 1422	0	1	0	0	0	0	1	0	0	1	0	0	0	0	1	1	0	0	0	1	0	0	1	0
YT119	VP-BGI	2044 1423	0	1	0	0	0	0	1	0	0	1	0	0	0	0	1	1	0	0	0	1	0	0	1	1
YT126	VQ-BVV	2044 1724	0	1	0	0	0	0	1	0	0	1	0	0	0	0	1	1	1	1	0	1	0	1	0	0
YT127	VQ-BVU	2044 1723	0	1	0	0	0	0	1	0	0	1	0	0	0	0	1	1	1	1	0	1	0	0	1	1
YT128	VQ-BWG	2044 1750	0	1	0	0	0	0	1	0	0	1	0	0	0	0	1	1	1	1	1	0	1	0	0	0
YT129	VQ-BWH	2044 1751	0	1	0	0	0	0	1	0	0	1	0	0	0	0	1	1	1	1	1	0	1	0	0	1
YT130	VQ-BWI	2044 1761	0	1	0	0	0	0	1	0	0	1	0	0	0	0	1	1	1	1	1	1	0	0	0	1
YT131	VQ-BWJ	2044 1762	0	1	0	0	0	0	1	0	0	1	0	0	0	0	1	1	1	1	1	1	0	0	1	0

NOTES:

1 SEE CHART FOR SWITCH POSITION
LOGIC "1" SWITCH IS ON (CLOSED)
LOGIC "0" SWITCH IS OFF (OPEN)

YT101-YT103

ATC TRANSPONDER 2

D280A351

34-53-21
Page 1
Sheet 2
Jun 21/2016

BOEING PROPRIETARY - Copyright © - Unpublished Work - See title page for details.

-A
115

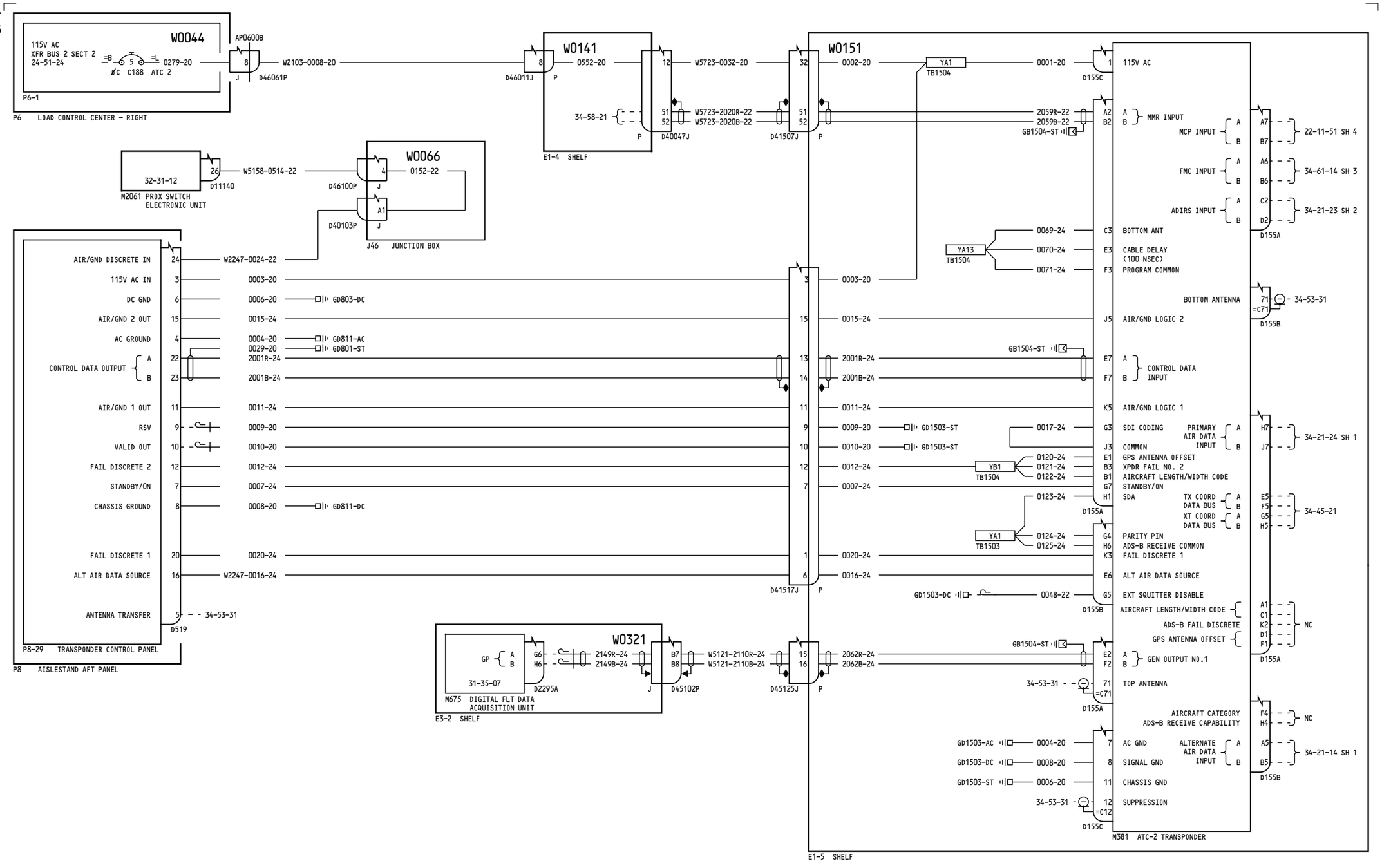

YT104-YT133	ATC TRANSPONDER 2
	D280A351

34-53-21
Page 2
Sheet 1
Jun 21/2016

BOEING PROPRIETARY - Copyright © - Unpublished Work - See title page for details.

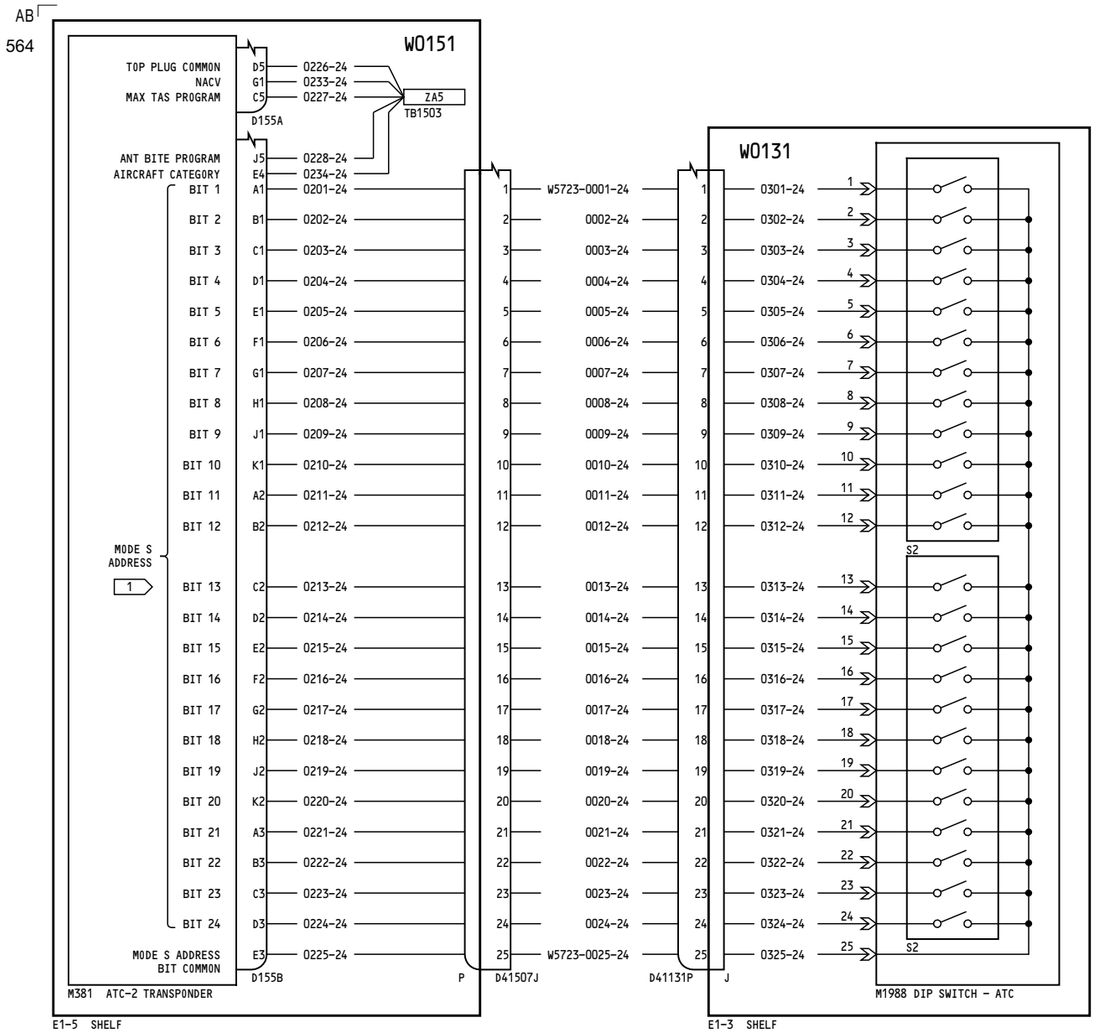

1

ADDRESS BIT			M1988																							
			1	2	3	4	5	6	7	8	9	10	11	12	13	14	15	16	17	18	19	20	21	22	23	24
AIRPLANE	MODE S CODE		D155B AND M1988S2																							
	REGISTRY	OCTAL	A1	B1	C1	D1	E1	F1	G1	H1	J1	K1	A2	B2	C2	D2	E2	F2	G2	H2	J2	K2	A3	B3	C3	D3
YT101	VP-BRF	2044 1334	0	1	0	0	0	0	1	0	0	1	0	0	0	0	1	0	1	1	0	1	1	1	0	0
YT102	VP-BRH	2044 1340	0	1	0	0	0	0	1	0	0	1	0	0	0	0	1	0	1	1	1	0	0	0	0	0
YT103	VP-BRR	2044 1352	0	1	0	0	0	0	1	0	0	1	0	0	0	0	1	0	1	1	1	0	1	0	1	0
YT104	VP-BZA	2044 1160	0	1	0	0	0	0	1	0	0	1	0	0	0	0	1	0	0	1	1	1	0	0	0	0
YT105	VP-BZB	2044 1356	0	1	0	0	0	0	1	0	0	1	0	0	0	0	1	0	1	1	1	0	1	1	1	0
YT106	VP-BON	2044 1362	0	1	0	0	0	0	1	0	0	1	0	0	0	0	1	0	1	1	1	1	0	0	1	0
YT107	VQ-BVO	2044 1725	0	1	0	0	0	0	1	0	0	1	0	0	0	0	1	1	1	1	0	1	0	1	0	1
YT108	VQ-BVP	2044 1726	0	1	0	0	0	0	1	0	0	1	0	0	0	0	1	1	1	1	0	1	0	1	1	0
YT109	VQ-BWA	2044 1742	0	1	0	0	0	0	1	0	0	1	0	0	0	0	1	1	1	1	1	0	0	0	1	0
YT110	VQ-BWB	2044 1756	0	1	0	0	0	0	1	0	0	1	0	0	0	0	1	1	1	1	1	0	1	1	1	0
YT111	VQ-BWC	2044 1757	0	1	0	0	0	0	1	0	0	1	0	0	0	0	1	1	1	1	1	0	1	1	1	1
YT112	VQ-BWD	2044 1760	0	1	0	0	0	0	1	0	0	1	0	0	0	0	1	1	1	1	1	1	0	0	0	0
YT113	VQ-BWE	2044 1773	0	1	0	0	0	0	1	0	0	1	0	0	0	0	1	1	1	1	1	1	1	0	1	1
YT114	VQ-BWF	2044 1774	0	1	0	0	0	0	1	0	0	1	0	0	0	0	1	1	1	1	1	1	1	1	0	0
YT115	VP-BCD	2044 1400	0	1	0	0	0	0	1	0	0	1	0	0	0	0	1	1	0	0	0	0	0	0	0	0
YT116	VP-BCF	2044 1401	0	1	0	0	0	0	1	0	0	1	0	0	0	0	1	1	0	0	0	0	0	0	0	1
YT117	VP-BCG	2044 1402	0	1	0	0	0	0	1	0	0	1	0	0	0	0	1	1	0	0	0	0	0	0	1	0
YT118	VP-BGG	2044 1422	0	1	0	0	0	0	1	0	0	1	0	0	0	0	1	1	0	0	0	1	0	0	1	0
YT119	VP-BGI	2044 1423	0	1	0	0	0	0	1	0	0	1	0	0	0	0	1	1	0	0	0	1	0	0	1	1
YT126	VQ-BVV	2044 1724	0	1	0	0	0	0	1	0	0	1	0	0	0	0	1	1	1	1	0	1	0	1	0	0
YT127	VQ-BVU	2044 1723	0	1	0	0	0	0	1	0	0	1	0	0	0	0	1	1	1	1	0	1	0	0	1	1
YT128	VQ-BWG	2044 1750	0	1	0	0	0	0	1	0	0	1	0	0	0	0	1	1	1	1	1	0	1	0	0	0
YT129	VQ-BWH	2044 1751	0	1	0	0	0	0	1	0	0	1	0	0	0	0	1	1	1	1	1	0	1	0	0	1
YT130	VQ-BWI	2044 1761	0	1	0	0	0	0	1	0	0	1	0	0	0	0	1	1	1	1	1	1	0	0	0	1
YT131	VQ-BWJ	2044 1762	0	1	0	0	0	0	1	0	0	1	0	0	0	0	1	1	1	1	1	1	0	0	1	0

NOTES:

1 SEE CHART FOR SWITCH POSITION
LOGIC "1" SWITCH IS ON (CLOSED)
LOGIC "0" SWITCH IS OFF (OPEN)

YT104-YT133

ATC TRANSPONDER 2

D280A351

34-53-21
Page 2
Sheet 2
Jun 21/2016

BOEING PROPRIETARY - Copyright © - Unpublished Work - See title page for details.

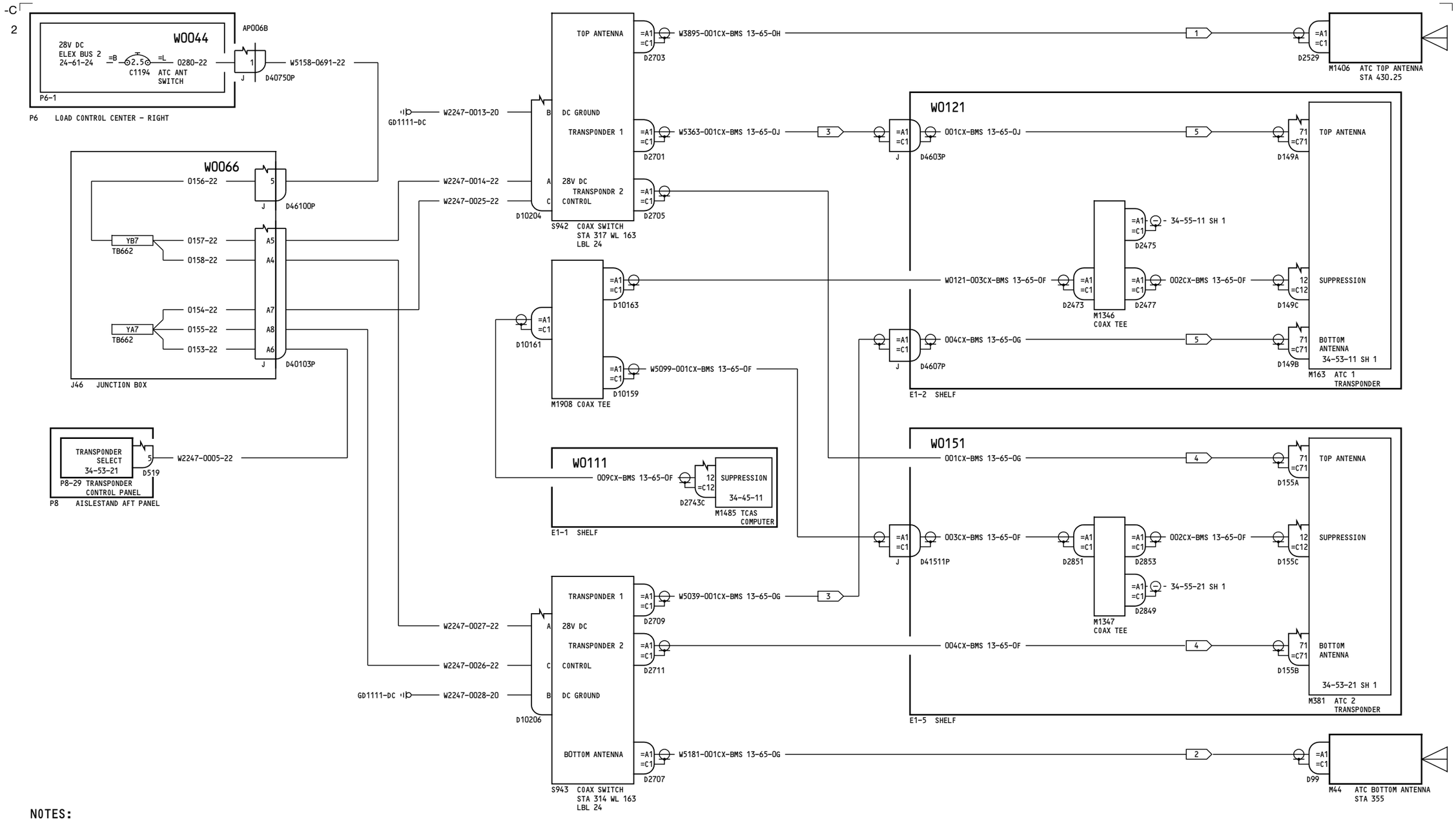

NOTES:

1. MAXIMUM LENGTH 30 FEET.
2. MAX LENGTH 6 FEET AND 6 INCHES
3. MAX. LENGTH 7 FEET AND 9 INCHES.
4. MAX. LENGTH 5 FEET.
5. MAX LENGTH 3 FEET AND 8 INCHES.

ALL	ATC ANTENNA SELECT
	D280A351

BOEING PROPRIETARY - Copyright © - Unpublished Work - See title page for details.

34-53-31
Page 1
Jun 21/2016

-A
41

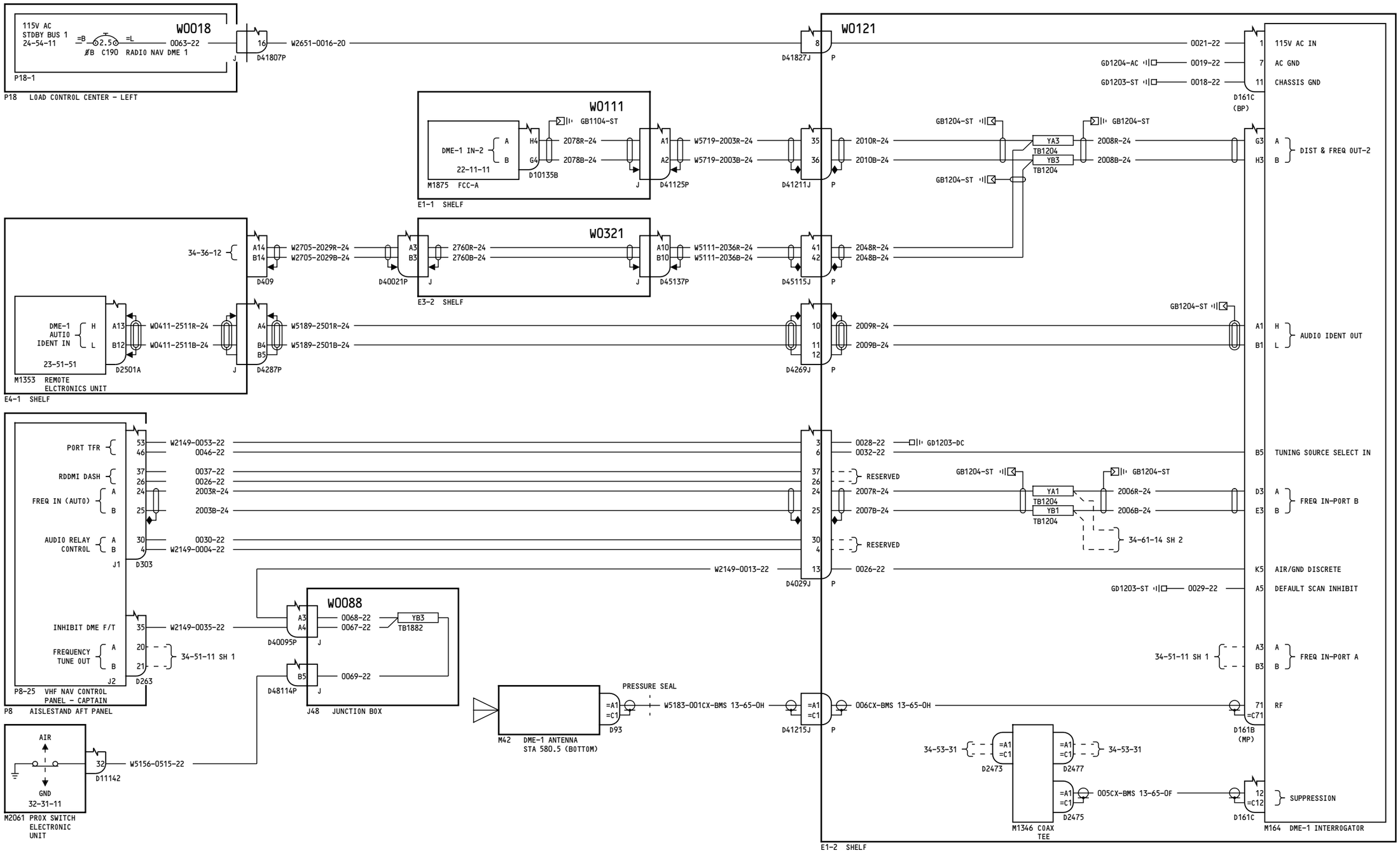

ALL	DME NO. 1
	D280A351

34-55-11
Page 1
Sheet 1
Jun 21/2016

BOEING PROPRIETARY - Copyright © - Unpublished Work - See title page for details.

-C
2

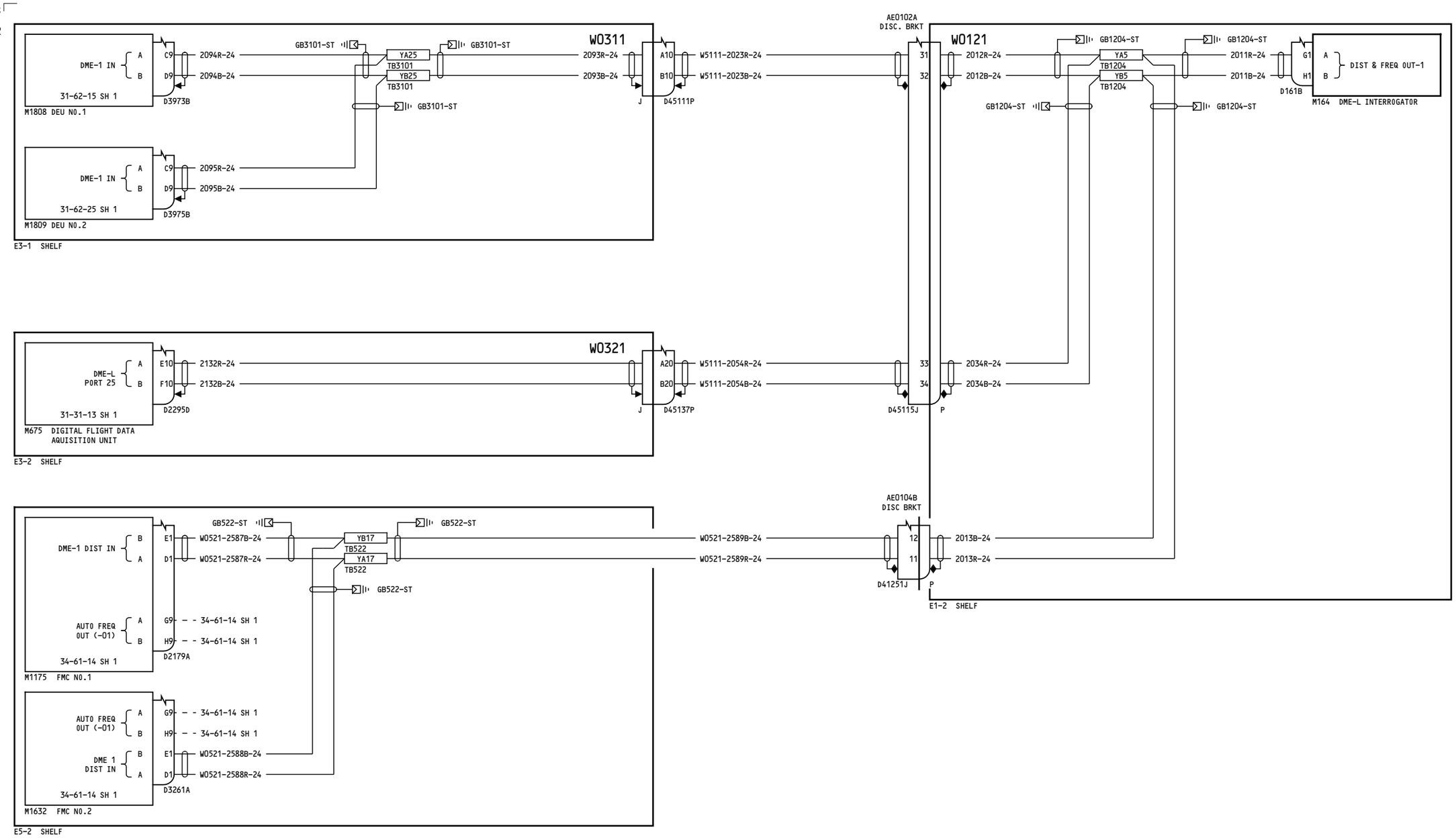

ALL	DME NO. 1
	D280A351

BOEING PROPRIETARY - Copyright © - Unpublished Work - See title page for details.

34-55-11
Page 1
Sheet 2
Jun 21/2016

-A
21

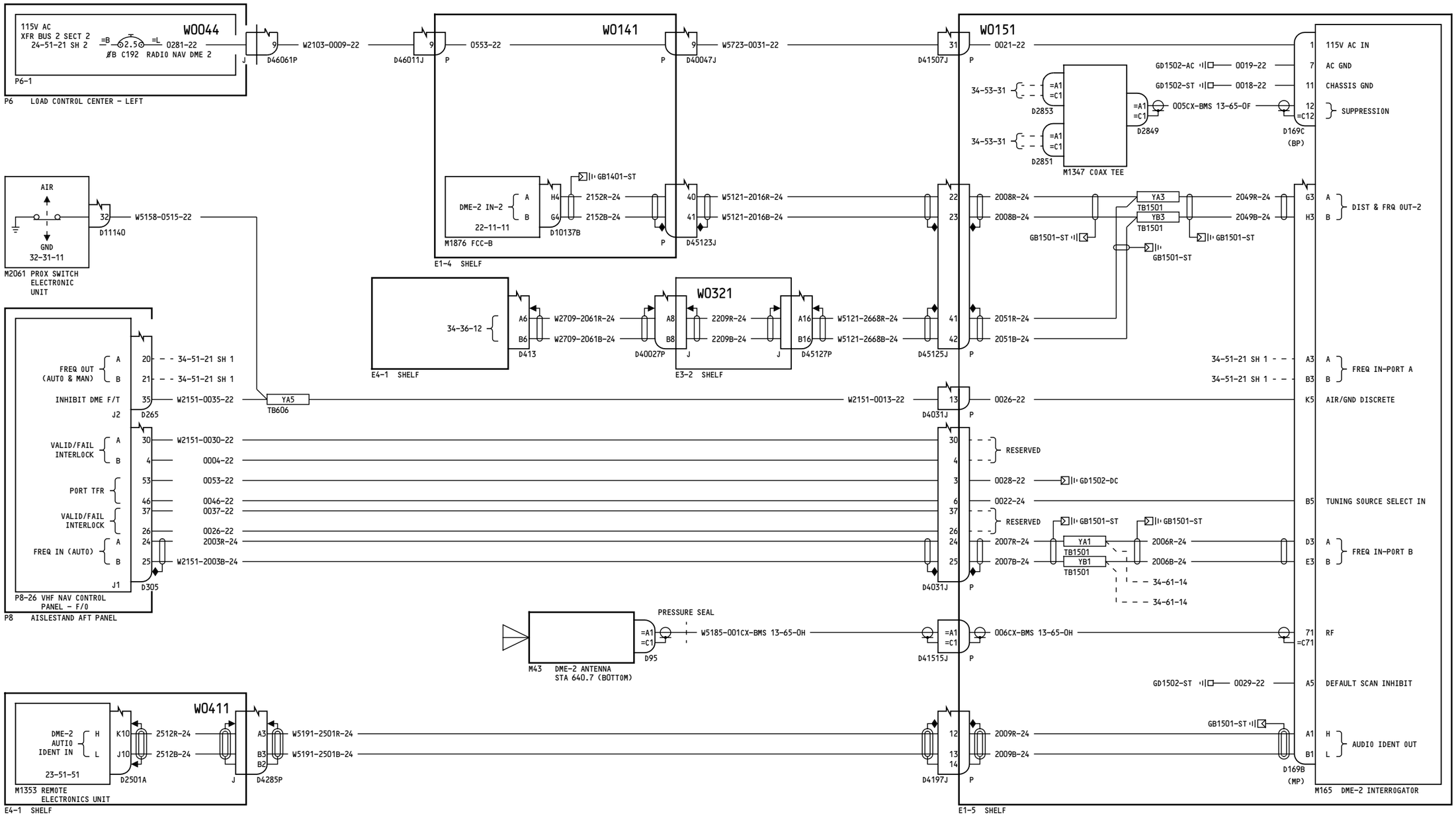

ALL	DME NO. 2
	D280A351

BOEING PROPRIETARY - Copyright © - Unpublished Work - See title page for details.

34-55-21
Page 1
Sheet 1
Jun 21/2016

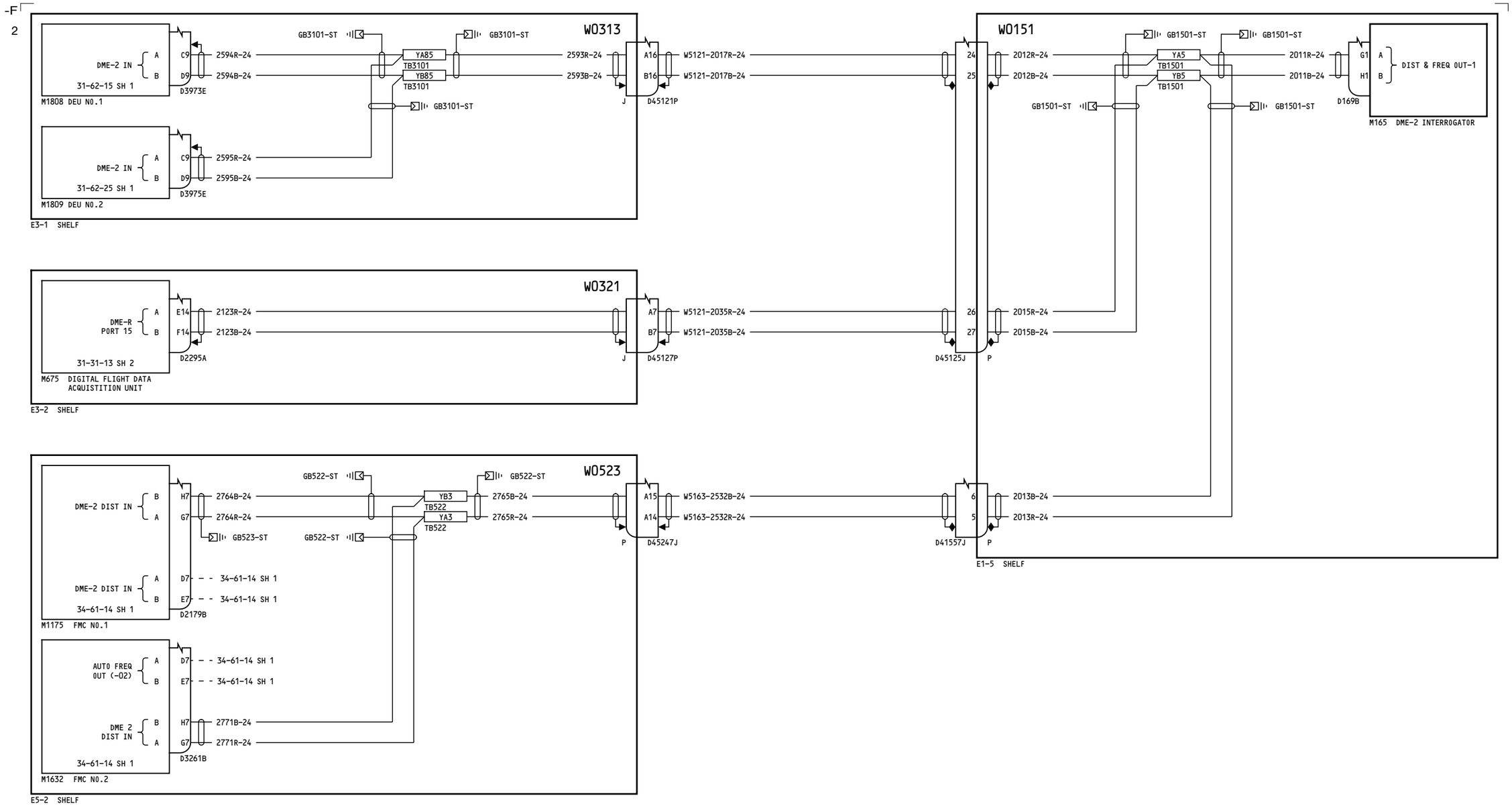

ALL	DME NO. 2
	D280A351

BOEING PROPRIETARY - Copyright © - Unpublished Work - See title page for details.

34-55-21

Page 1
Sheet 2
Jun 21/2016

41

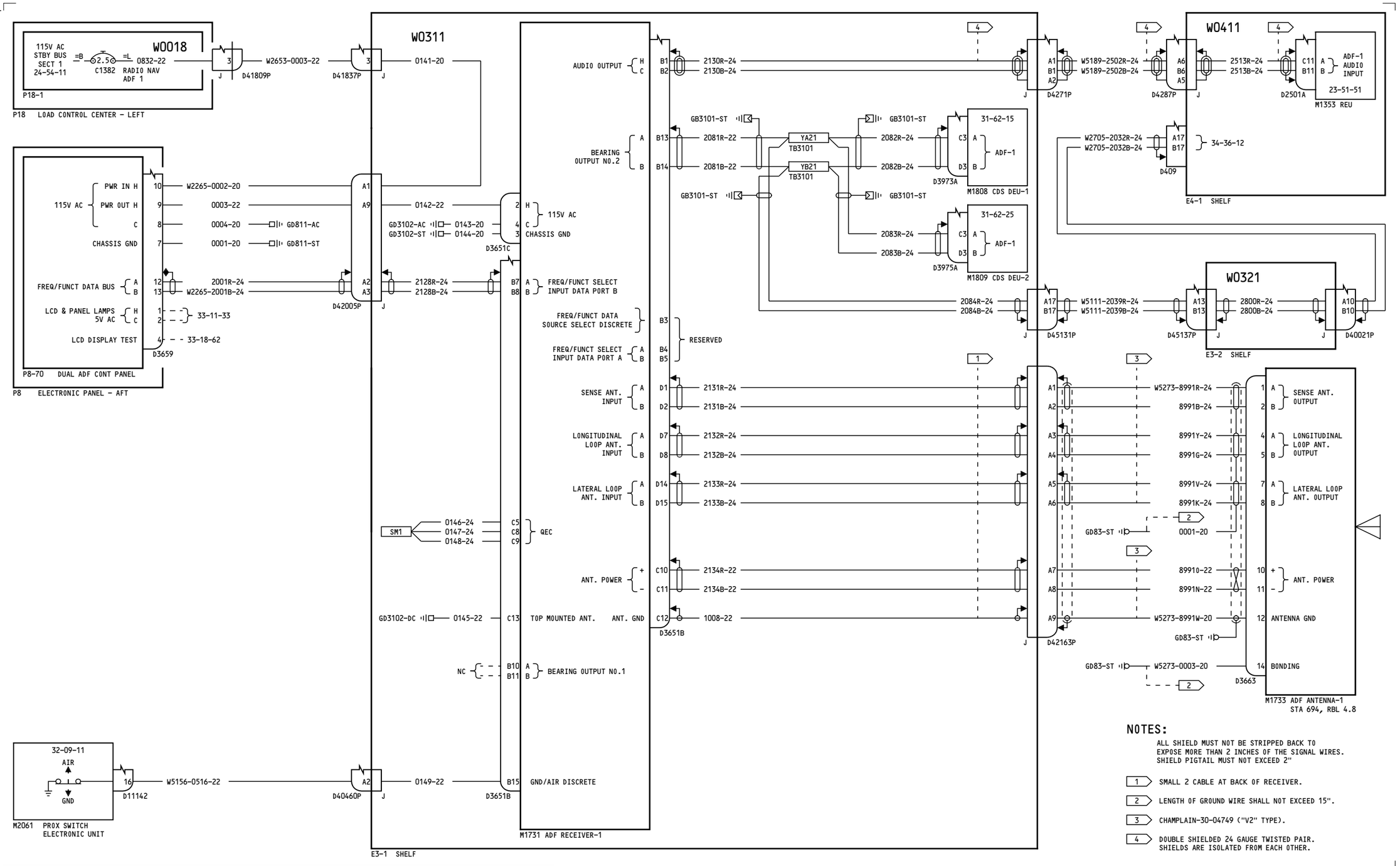

NOTES:

ALL SHIELD MUST NOT BE STRIPPED BACK TO EXPOSE MORE THAN 2 INCHES OF THE SIGNAL WIRES. SHIELD PIGTAIL MUST NOT EXCEED 2"

1. SMALL 2 CABLE AT BACK OF RECEIVER.
2. LENGTH OF GROUND WIRE SHALL NOT EXCEED 15".
3. CHAMPLAIN-30-04749 ("V2" TYPE).
4. DOUBLE SHIELDED 24 GAUGE TWISTED PAIR. SHIELDS ARE ISOLATED FROM EACH OTHER.

YT101-YT103

ADF-1

D280A351

34-57-11
Page 1
Aug 15/2013

BOEING PROPRIETARY - Copyright © - Unpublished Work - See title page for details.

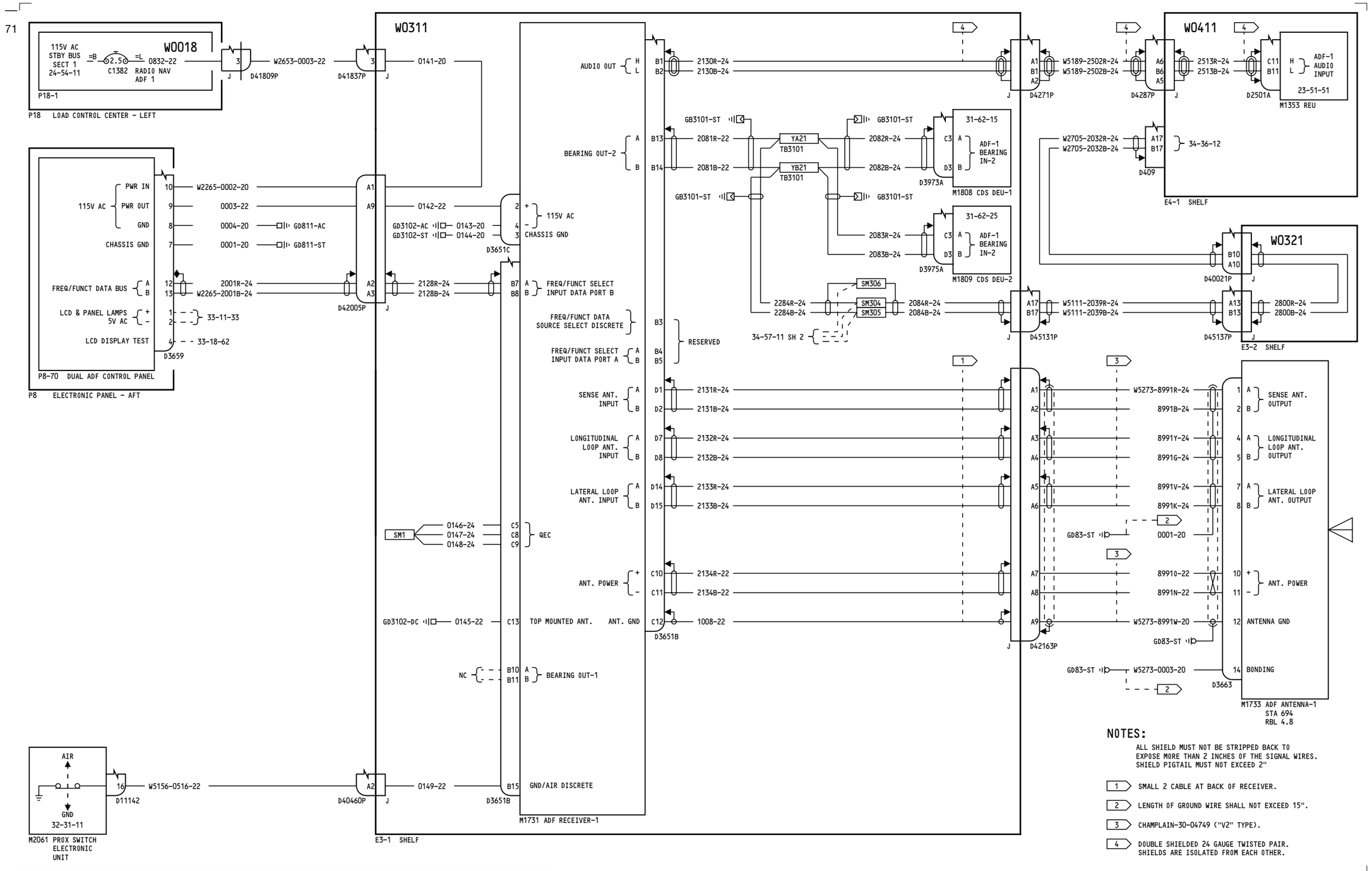

NOTES:

ALL SHIELD MUST NOT BE STRIPPED BACK TO EXPOSE MORE THAN 2 INCHES OF THE SIGNAL WIRES. SHIELD PIGTAIL MUST NOT EXCEED 2"

1. SMALL 2 CABLE AT BACK OF RECEIVER.
2. LENGTH OF GROUND WIRE SHALL NOT EXCEED 15".
3. CHAMPLAIN-30-04749 ("V2" TYPE).
4. DOUBLE SHIELDED 24 GAUGE TWISTED PAIR. SHIELDS ARE ISOLATED FROM EACH OTHER.

YT104-YT133	ADF-1
	D280A351

34-57-11
Page 2
Sheet 1
Jun 21/2016

BOEING PROPRIETARY - Copyright © - Unpublished Work - See title page for details.

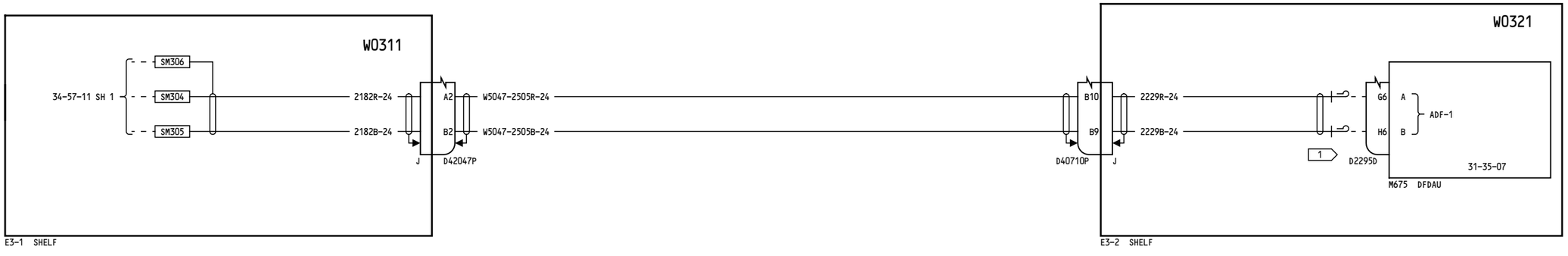

NOTES:

1 CAP AND STOW NEAR D2295D

YT104-YT133	ADF-1
	D280A351

BOEING PROPRIETARY - Copyright © - Unpublished Work - See title page for details.

34-57-11

Page 2
Sheet 2
Jun 21/2016

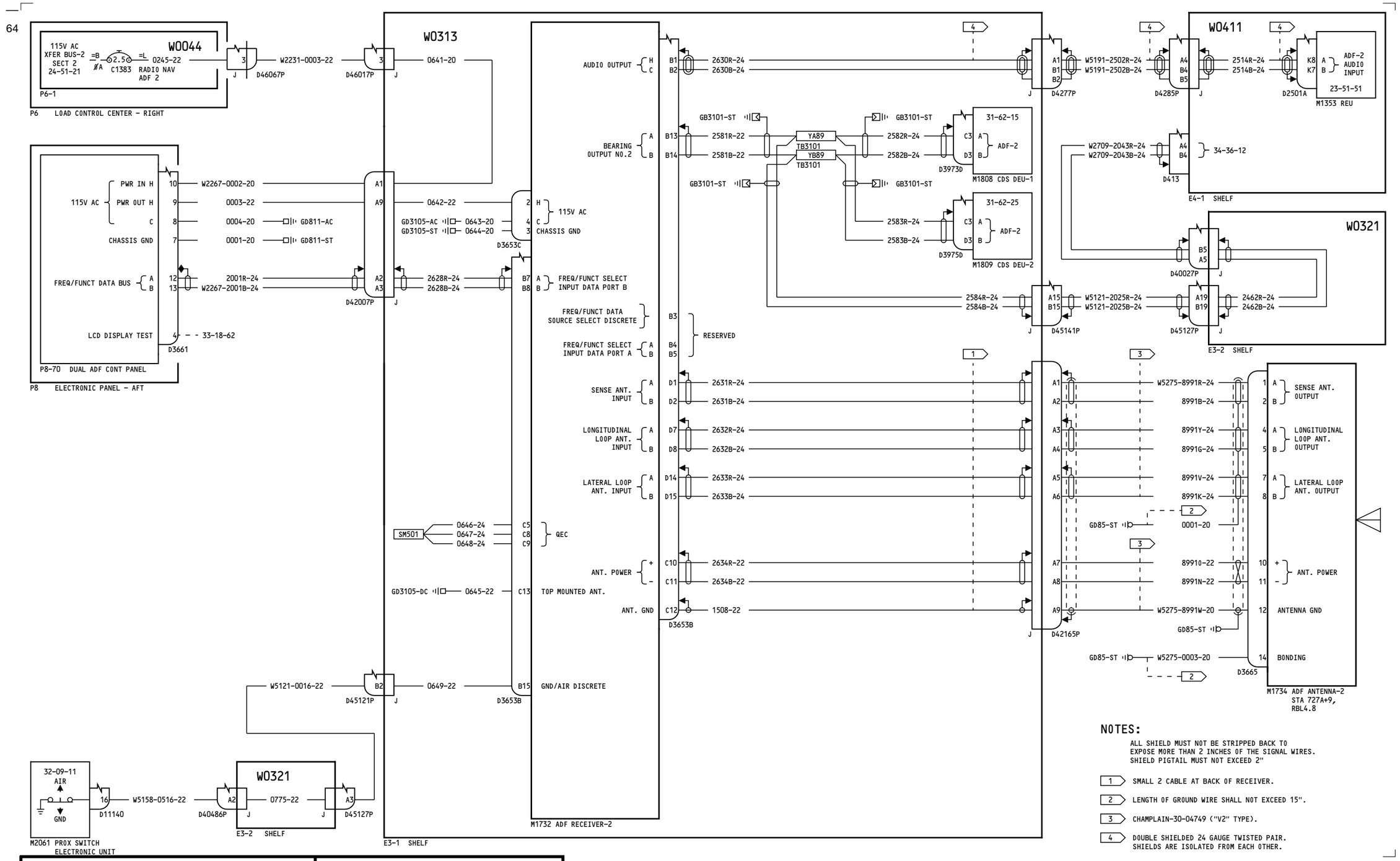

YT101-YT103

ADF-2

D280A351

34-57-21

Page 1

Aug 15/2013

BOEING PROPRIETARY - Copyright © - Unpublished Work - See title page for details.

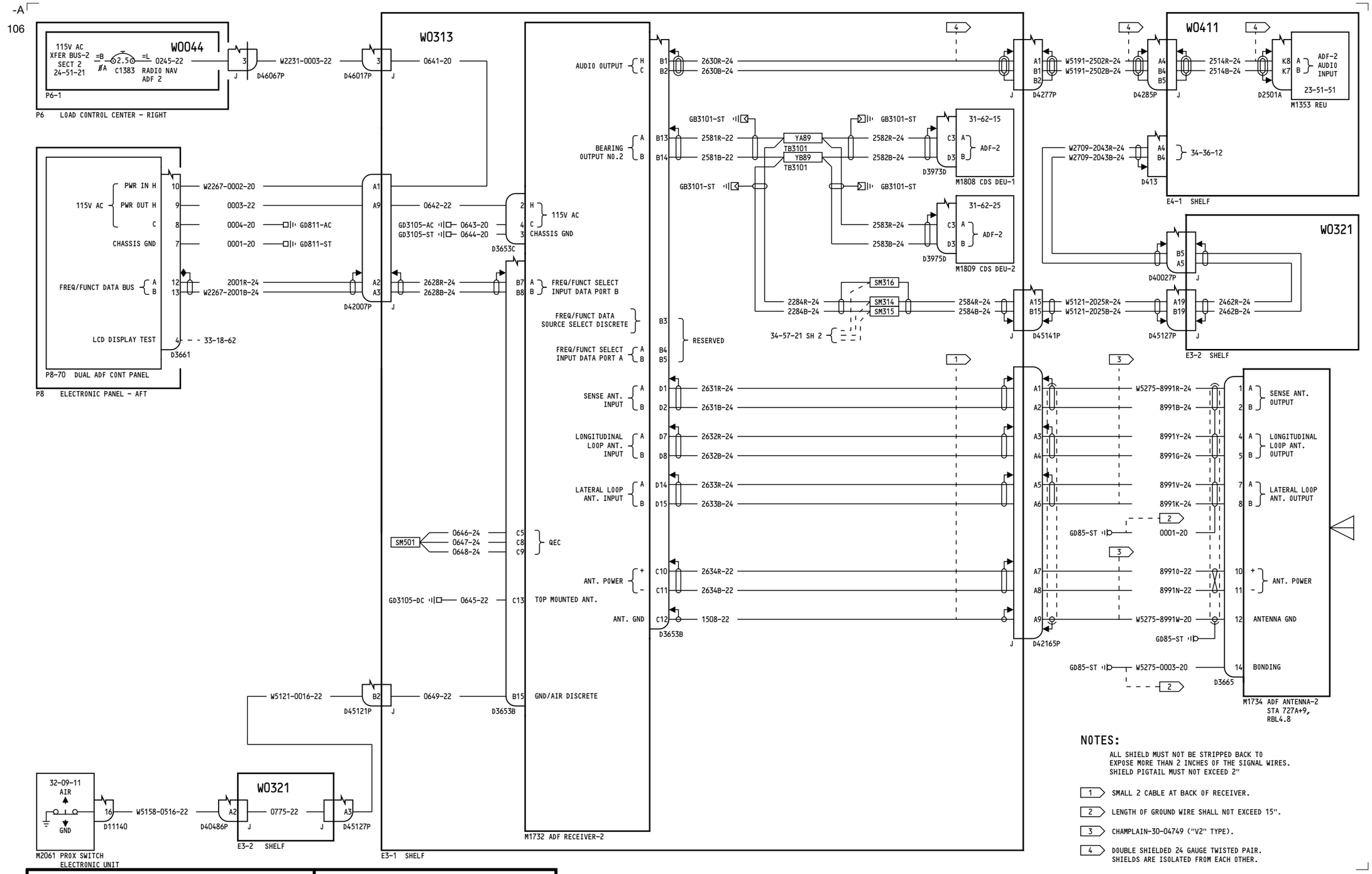

NOTES:

ALL SHIELD MUST NOT BE STRIPPED BACK TO EXPOSE MORE THAN 2 INCHES OF THE SIGNAL WIRES. SHIELD PIGTAIL MUST NOT EXCEED 2"

1. SMALL 2 CABLE AT BACK OF RECEIVER.
2. LENGTH OF GROUND WIRE SHALL NOT EXCEED 15".
3. CHAMPLAIN-30-04749 ("V2" TYPE).
4. DOUBLE SHIELDED 24 GAUGE TWISTED PAIR. SHIELDS ARE ISOLATED FROM EACH OTHER.

YT104-YT133

ADF-2

D280A351

34-57-21
Page 2
Sheet 1
Jun 21/2016

BOEING PROPRIETARY - Copyright © - Unpublished Work - See title page for details.

-A
3

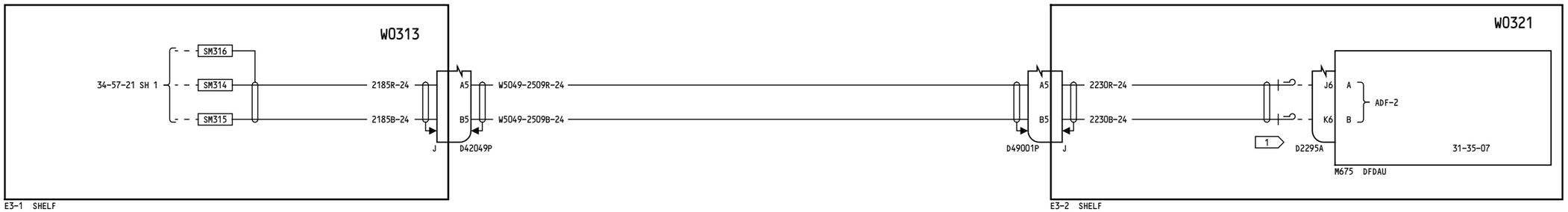

NOTES:

1 CAP AND STOW NEAR D2295A

YT104-YT133	**ADF-2**
	D280A351

BOEING PROPRIETARY - Copyright © - Unpublished Work - See title page for details.

34-57-21

Page 2
Sheet 2
Jun 21/2016

309

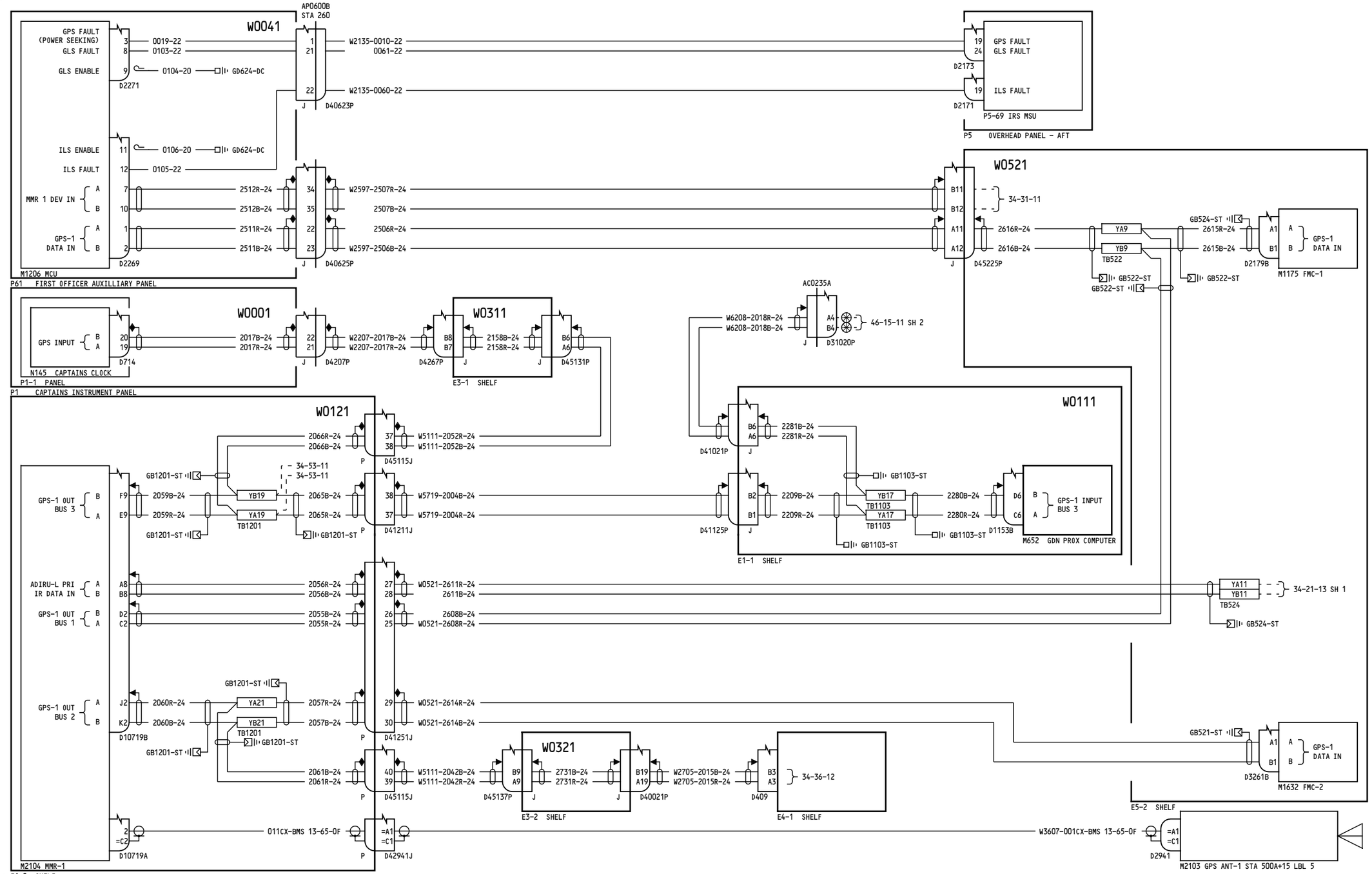

YT101-YT103

GLOBAL POSITIONING SYSTEM SENSOR UNIT NO.1

D280A351

34-58-11

Page 1

Aug 15/2013

BOEING PROPRIETARY - Copyright © - Unpublished Work - See title page for details.

320

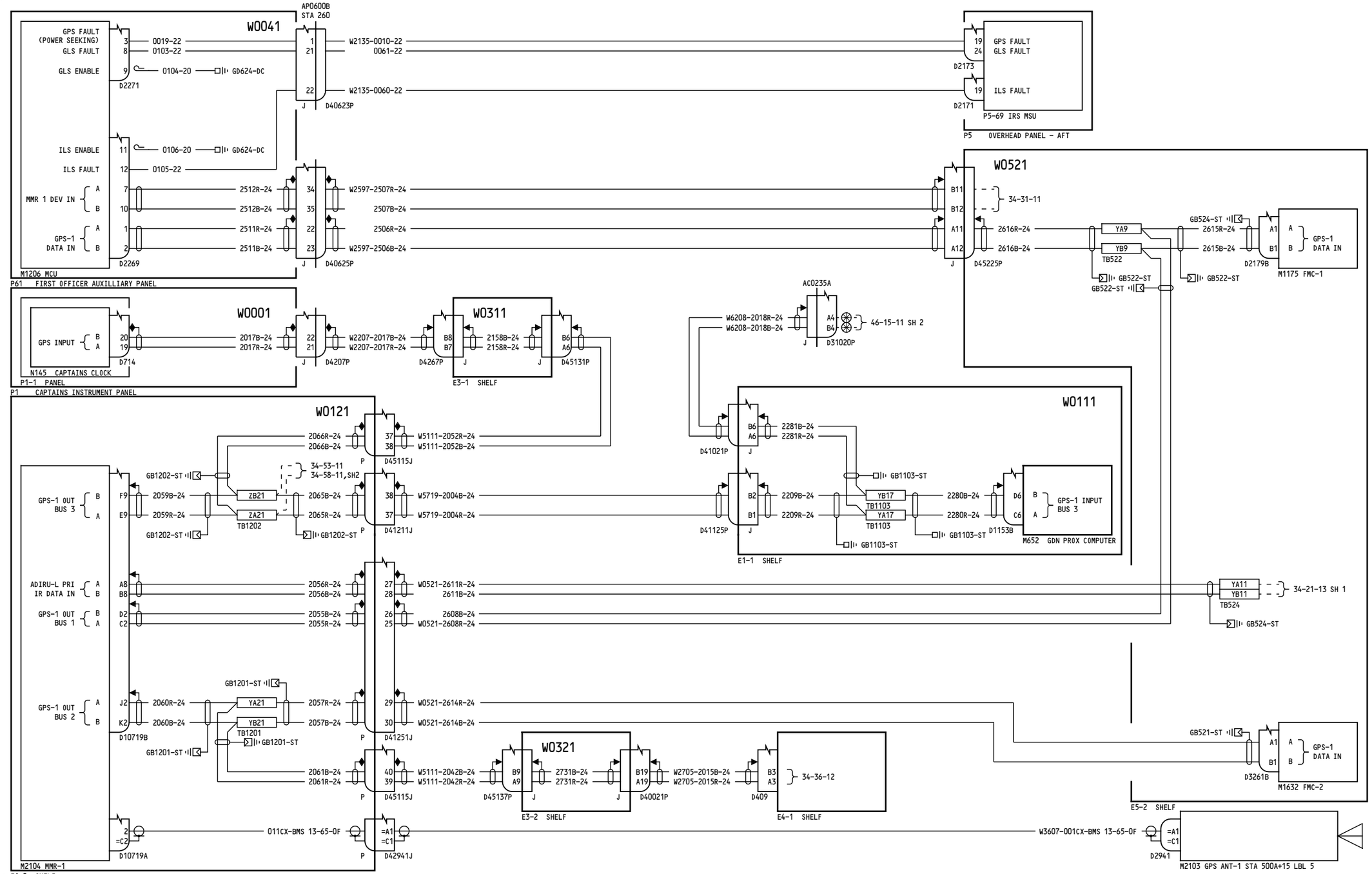

YT104-YT105

GLOBAL POSITIONING SYSTEM SENSOR UNIT NO.1

D280A351

34-58-11

Page 2
Sheet 1
Apr 17/2014

BOEING PROPRIETARY - Copyright © - Unpublished Work - See title page for details.

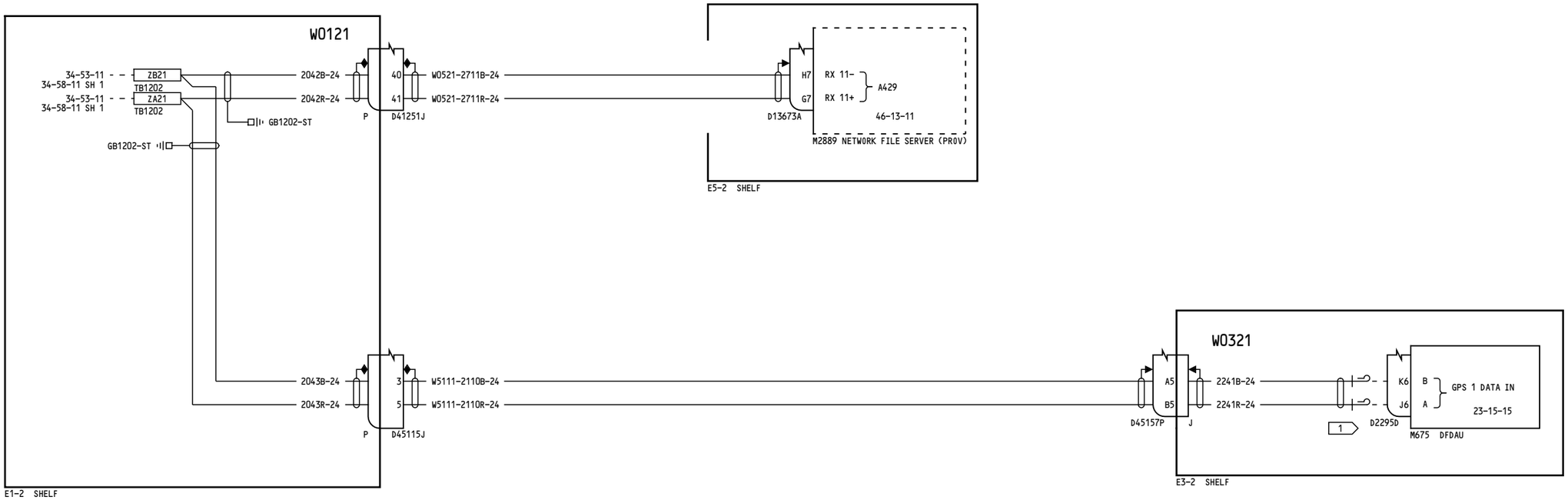

NOTES:

1 CAP AND STOW NEAR D2295D

YT104-YT105

GLOBAL POSITIONING SYSTEM SENSOR UNIT NO.1

D280A351

BOEING PROPRIETARY - Copyright © - Unpublished Work - See title page for details.

34-58-11

Page 2
Sheet 2
Apr 17/2014

320

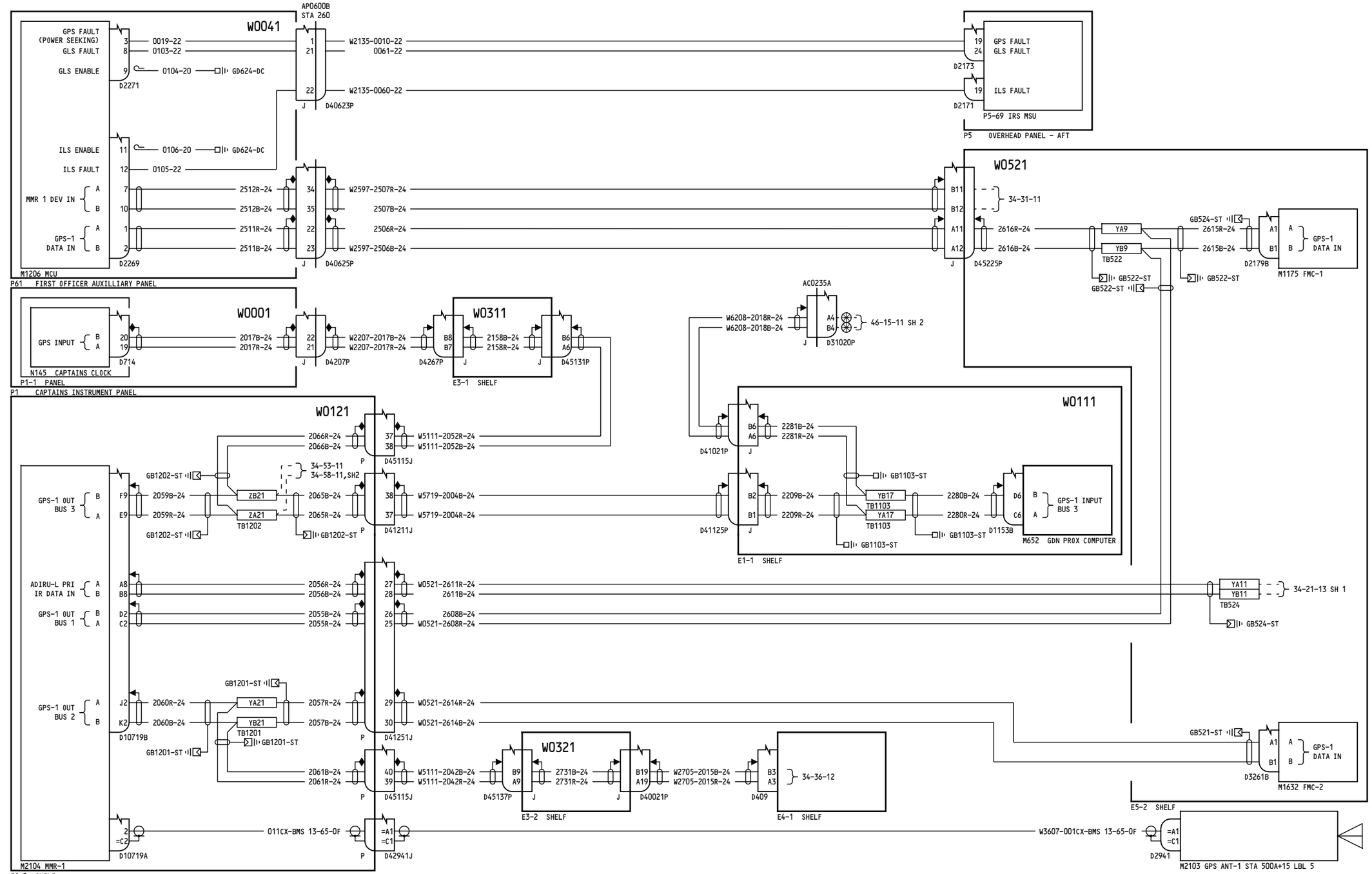

YT106-YT119

GLOBAL POSITIONING SYSTEM SENSOR UNIT NO.1

D280A351

34-58-11

Page 3
Sheet 1
Jun 21/2016

BOEING PROPRIETARY - Copyright © - Unpublished Work - See title page for details.

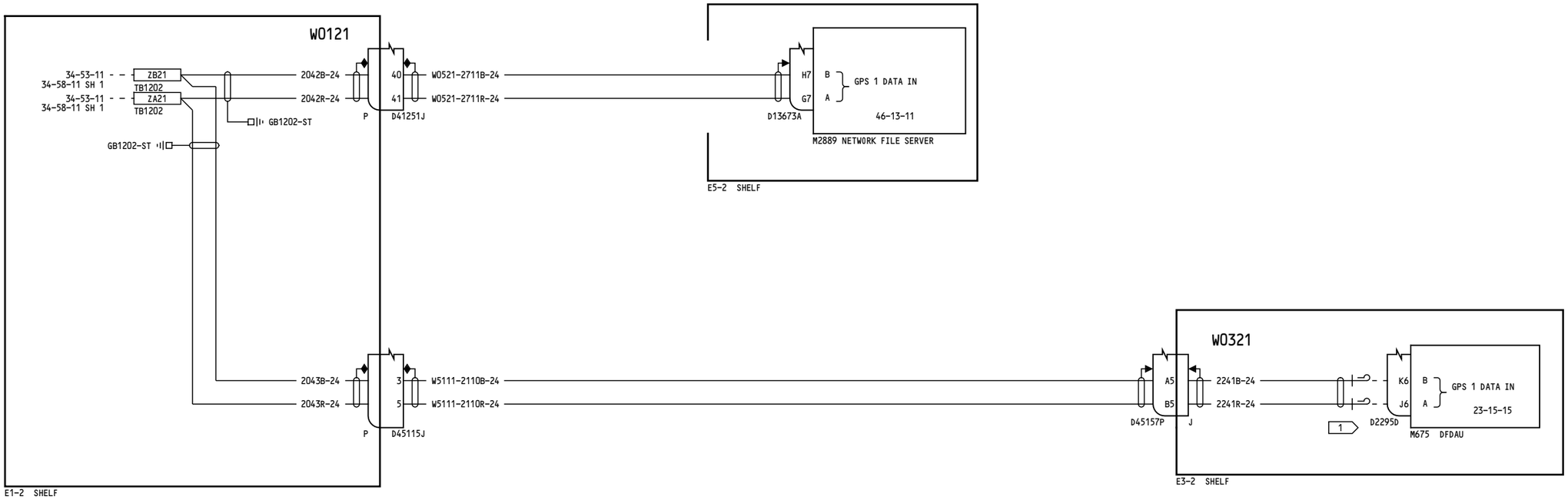

NOTES:

1 CAP AND STOW NEAR D2295D

YT106-YT119	**GLOBAL POSITIONING SYSTEM SENSOR UNIT NO.1**
	D280A351

BOEING PROPRIETARY - Copyright © - Unpublished Work - See title page for details.

34-58-11

Page 3
Sheet 2
Jun 21/2016

311

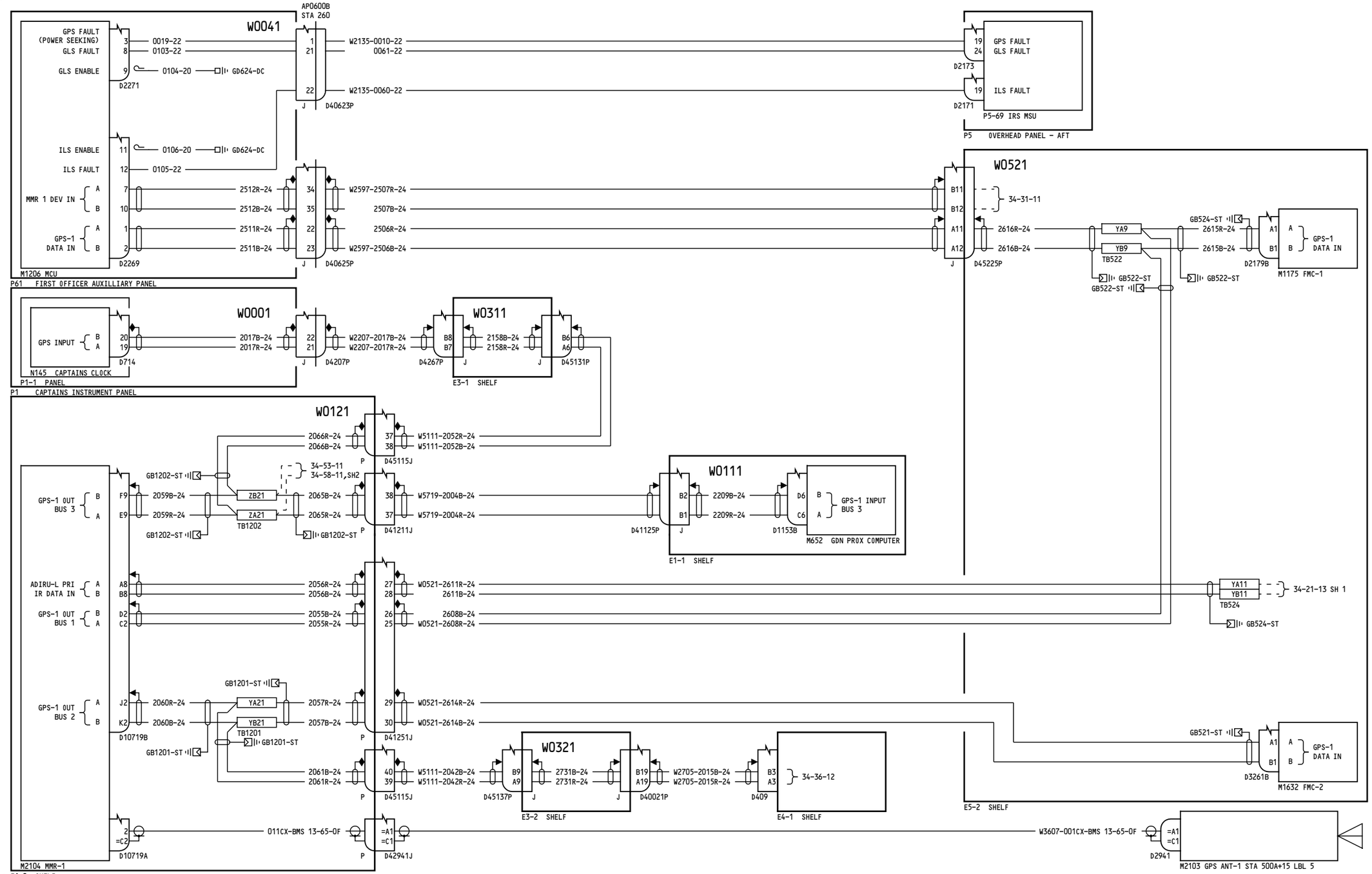

YT126-YT129

GLOBAL POSITIONING SYSTEM SENSOR UNIT NO.1

D280A351

34-58-11

Page 4
Sheet 1
May 15/2015

BOEING PROPRIETARY - Copyright © - Unpublished Work - See title page for details.

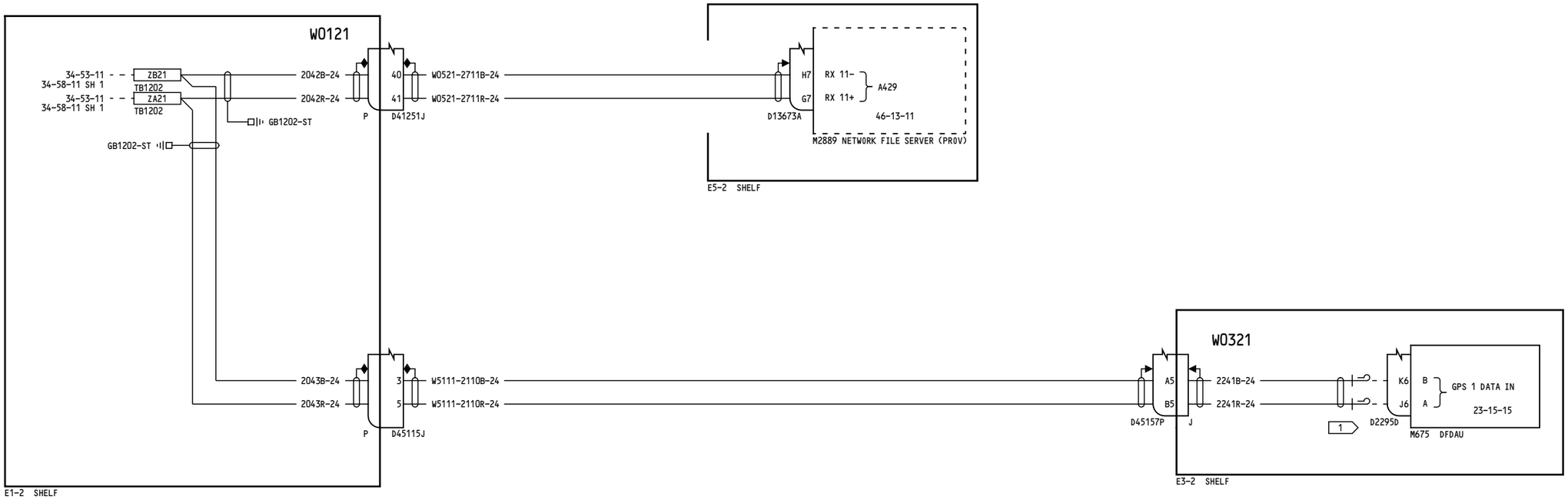

NOTES:

1 CAP AND STOW NEAR D2295D

YT126-YT129	GLOBAL POSITIONING SYSTEM SENSOR UNIT NO.1 D280A351

BOEING PROPRIETARY - Copyright © - Unpublished Work - See title page for details.

34-58-11

Page 4
Sheet 2
May 15/2015

313

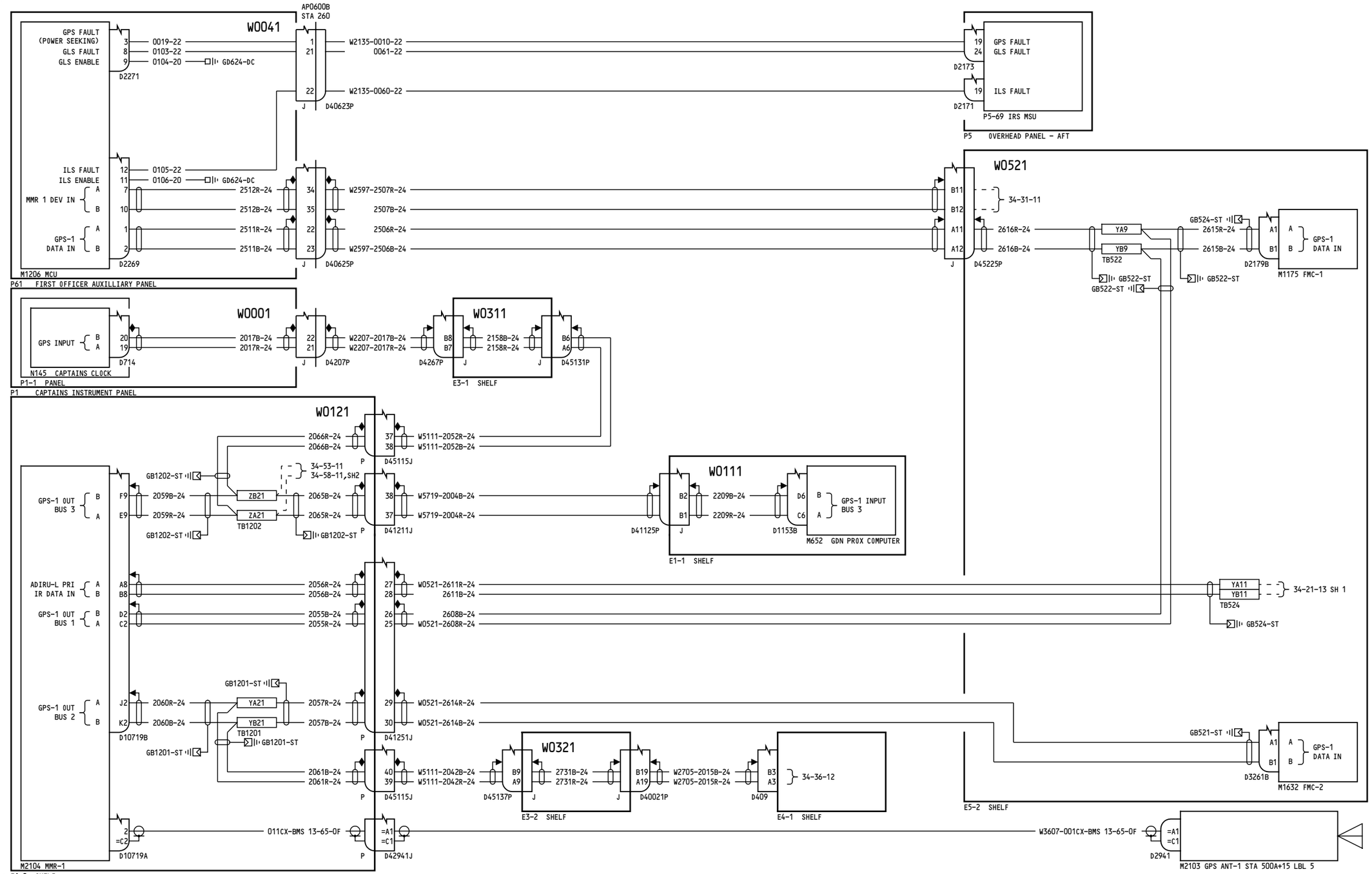

YT130-YT133

GLOBAL POSITIONING SYSTEM SENSOR UNIT NO.1

D280A351

34-58-11

Page 5
Sheet 1
Jun 21/2016

BOEING PROPRIETARY - Copyright © - Unpublished Work - See title page for details.

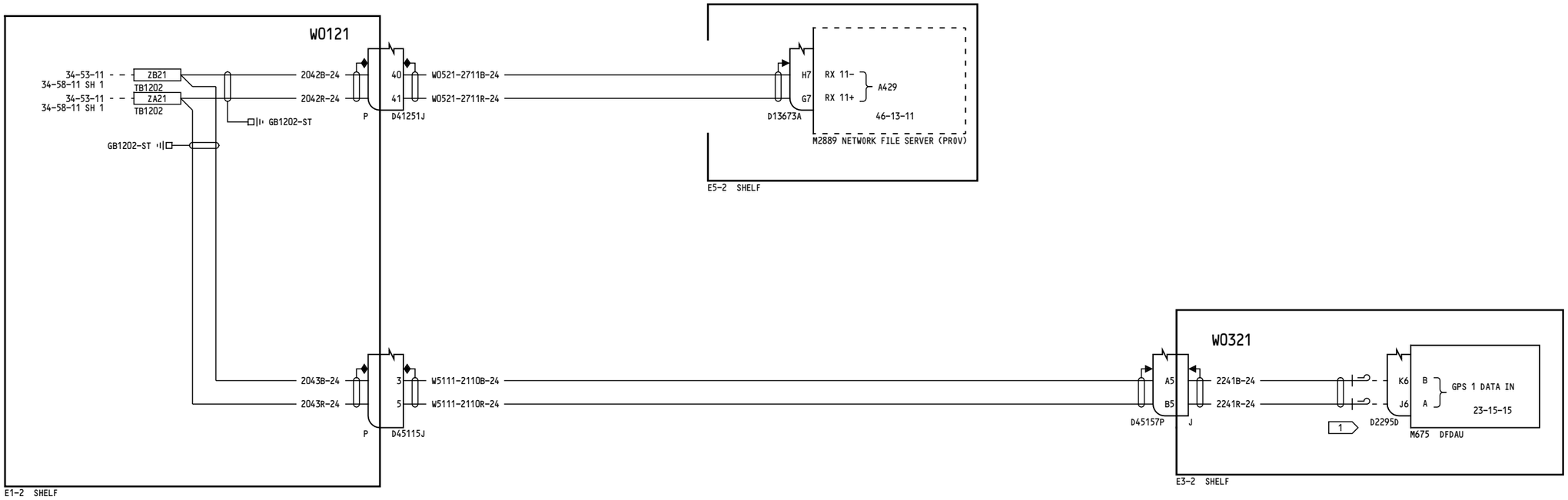

NOTES:

1 CAP AND STOW NEAR D2295D

YT130-YT133	**GLOBAL POSITIONING SYSTEM SENSOR UNIT NO.1**
	D280A351

BOEING PROPRIETARY - Copyright © - Unpublished Work - See title page for details.

34-58-11

Page 5
Sheet 2
Jun 21/2016

-A
223

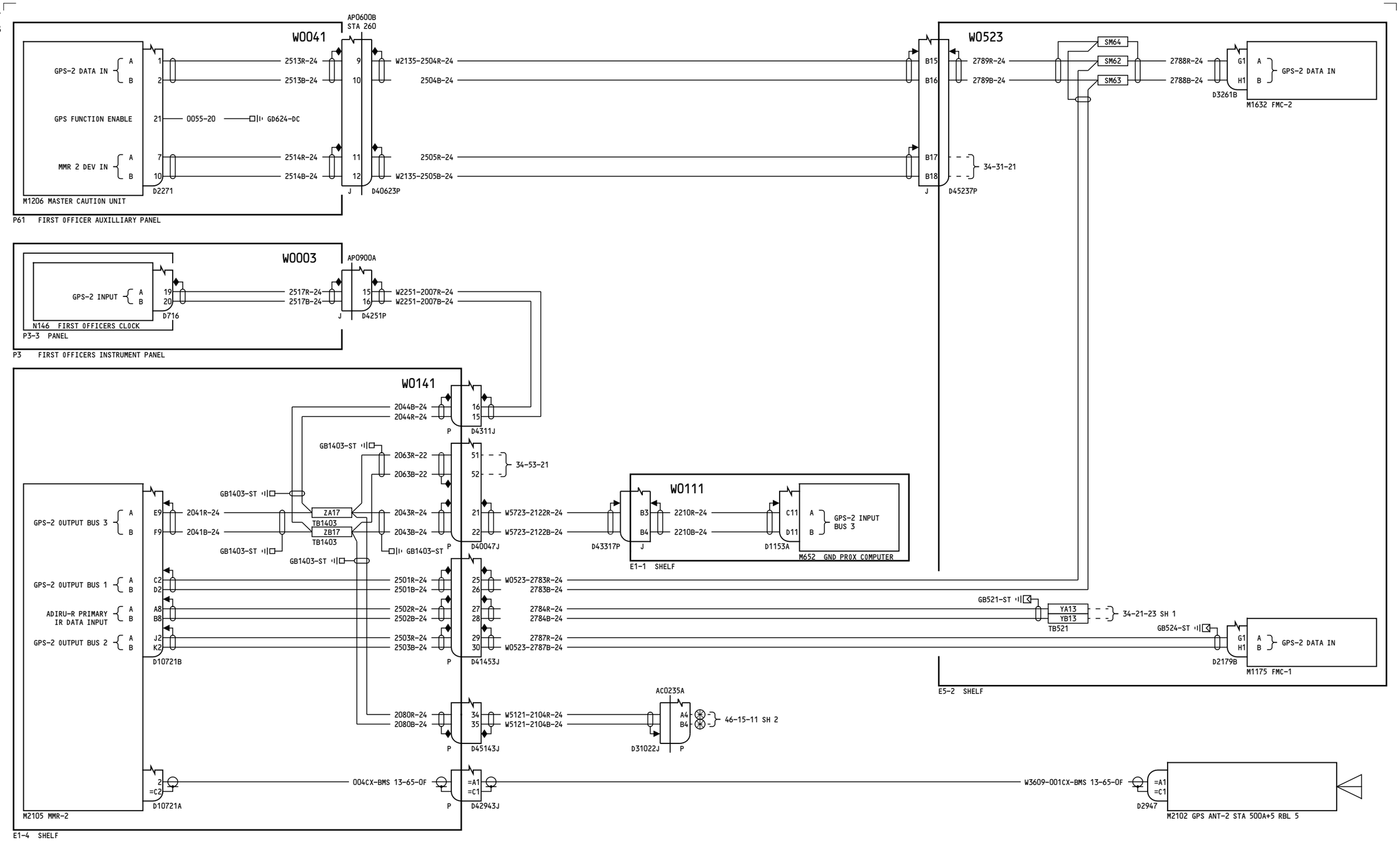

YT101-YT103

GLOBAL POSITIONING SYSTEM SENSOR UNIT NO.2

D280A351

BOEING PROPRIETARY - Copyright © - Unpublished Work - See title page for details.

34-58-21

Page 1

Aug 15/2013

242

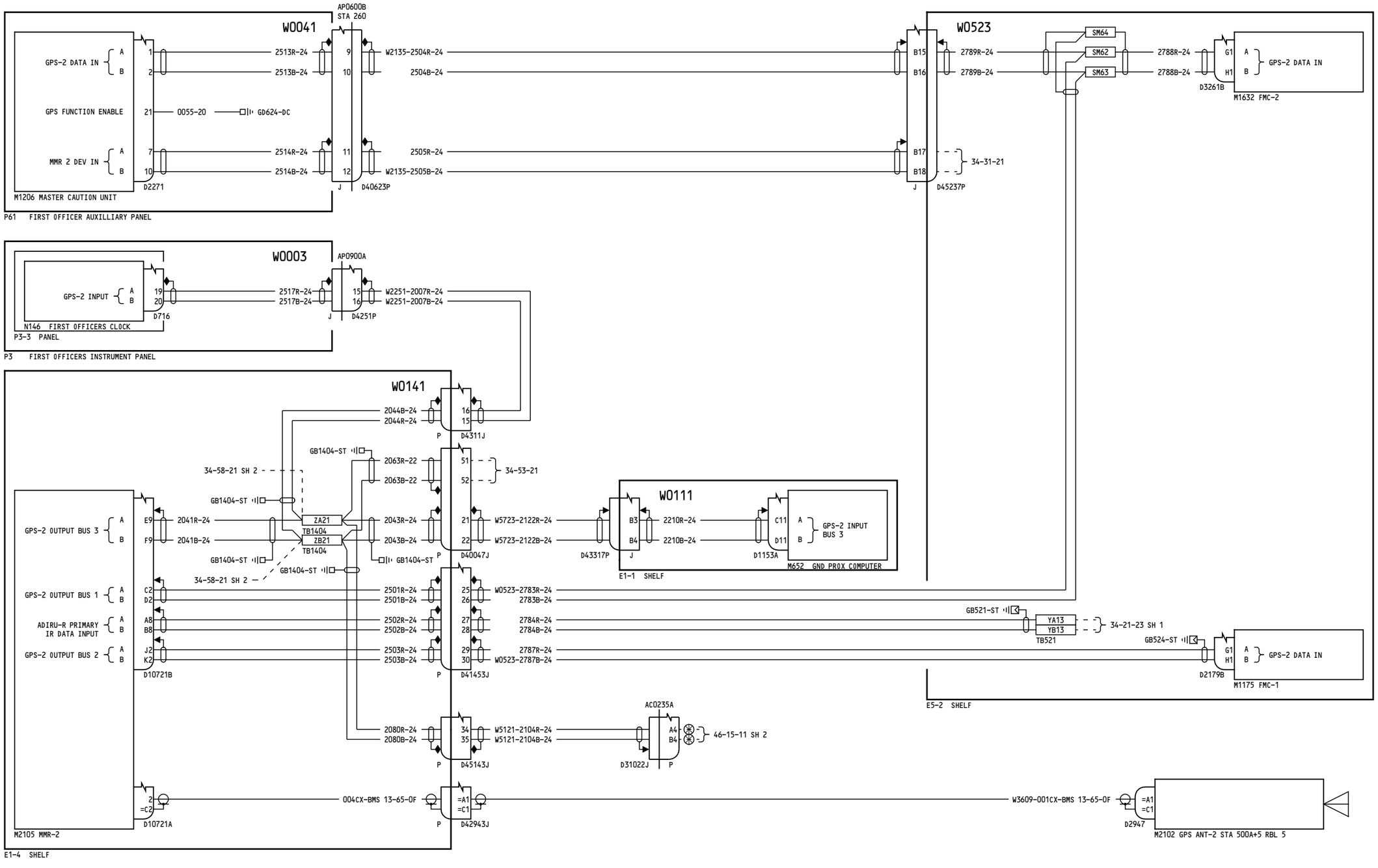

YT104-YT120	GLOBAL POSITIONING SYSTEM SENSOR UNIT NO.2	
	D280A351	

34-58-21

Page 2
Sheet 1
Mar 14/2016

BOEING PROPRIETARY - Copyright © - Unpublished Work - See title page for details.

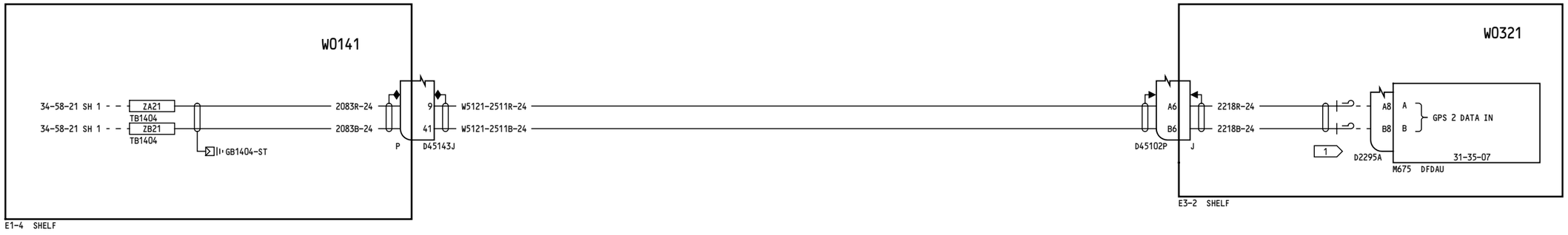

NOTES:

1 CAP AND STOW NEAR D2295A

YT104-YT120	GLOBAL POSITIONING SYSTEM SENSOR UNIT NO.2
	D280A351

BOEING PROPRIETARY - Copyright © - Unpublished Work - See title page for details.

34-58-21

Page 2
Sheet 2
Mar 14/2016

239

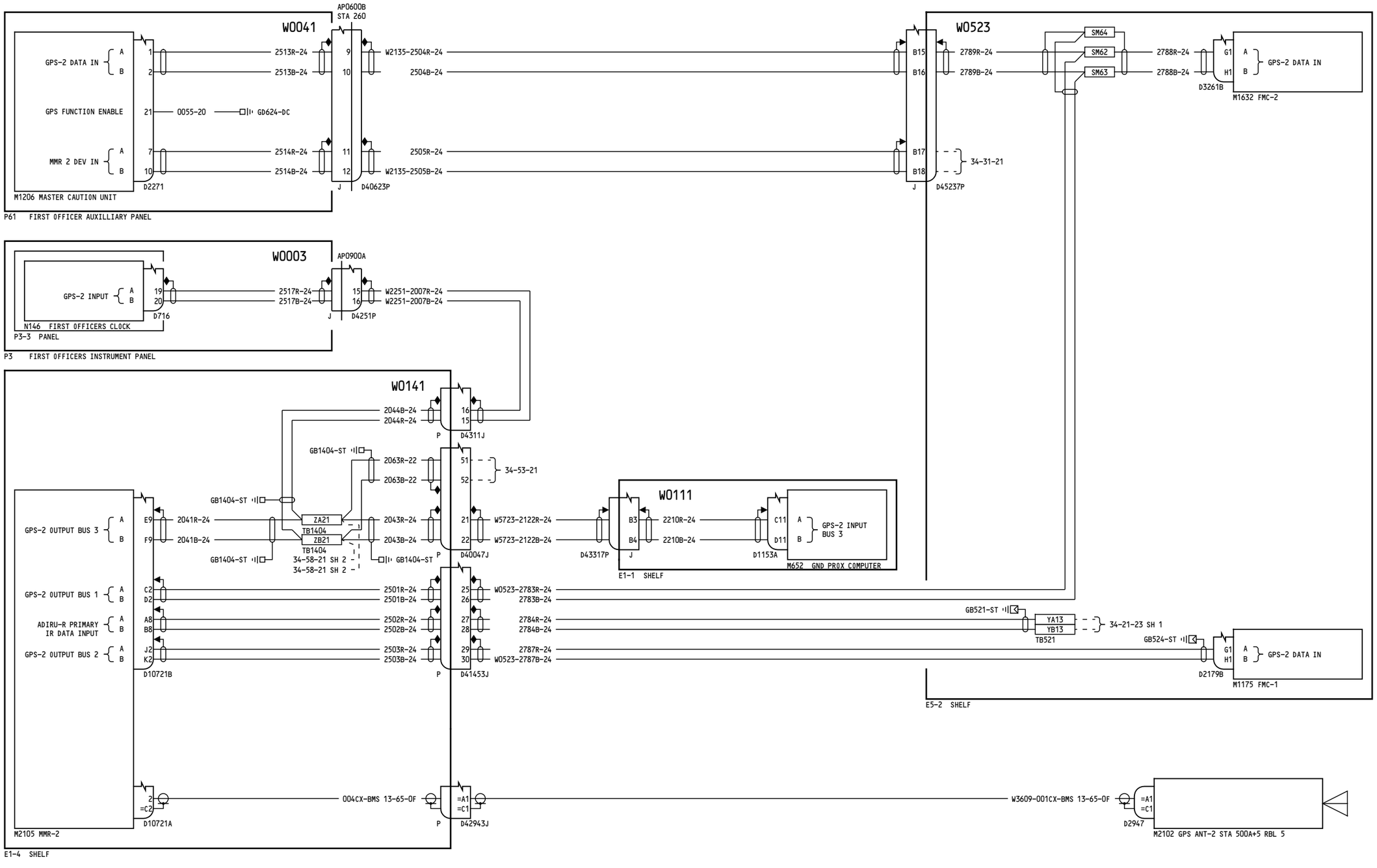

YT126-YT133	GLOBAL POSITIONING SYSTEM SENSOR UNIT NO.2
	D280A351

34-58-21

Page 3
Sheet 1
Jun 21/2016

BOEING PROPRIETARY - Copyright © - Unpublished Work - See title page for details.

9

NOTES:

1 CAP AND STOW NEAR D2295A

YT126-YT133	GLOBAL POSITIONING SYSTEM SENSOR UNIT NO.2
	D280A351

BOEING PROPRIETARY - Copyright © - Unpublished Work - See title page for details.

34-58-21

Page 3
Sheet 2
Jun 21/2016

74

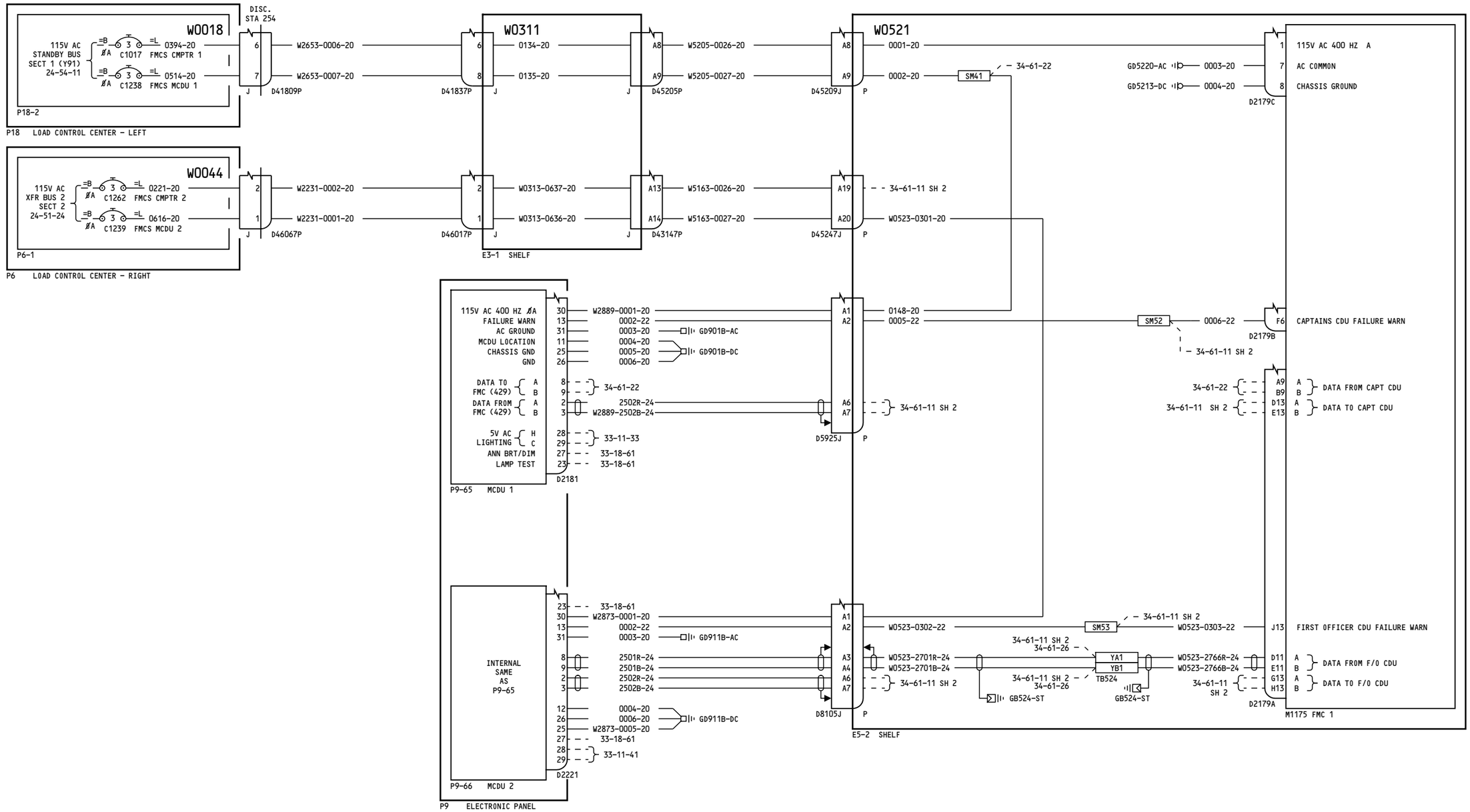

BOEING PROPRIETARY - Copyright © - Unpublished Work - See title page for details.

34-61-11

Page 1
Sheet 1
May 15/2015

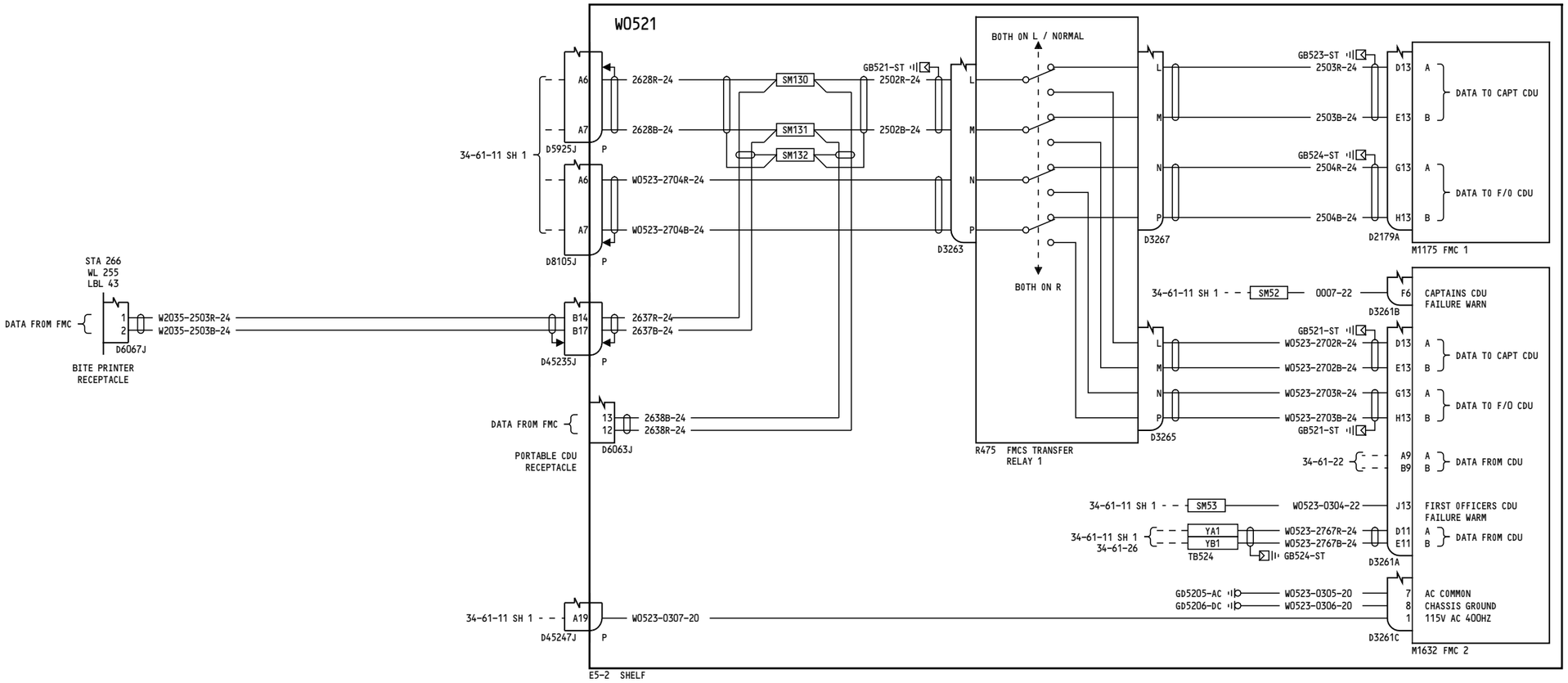

YT101-YT108, YT126-YT129	**FMCS POWER AND DISPLAY**
	D280A351

BOEING PROPRIETARY - Copyright © - Unpublished Work - See title page for details.

34-61-11

Page 1
Sheet 2
May 15/2015

74

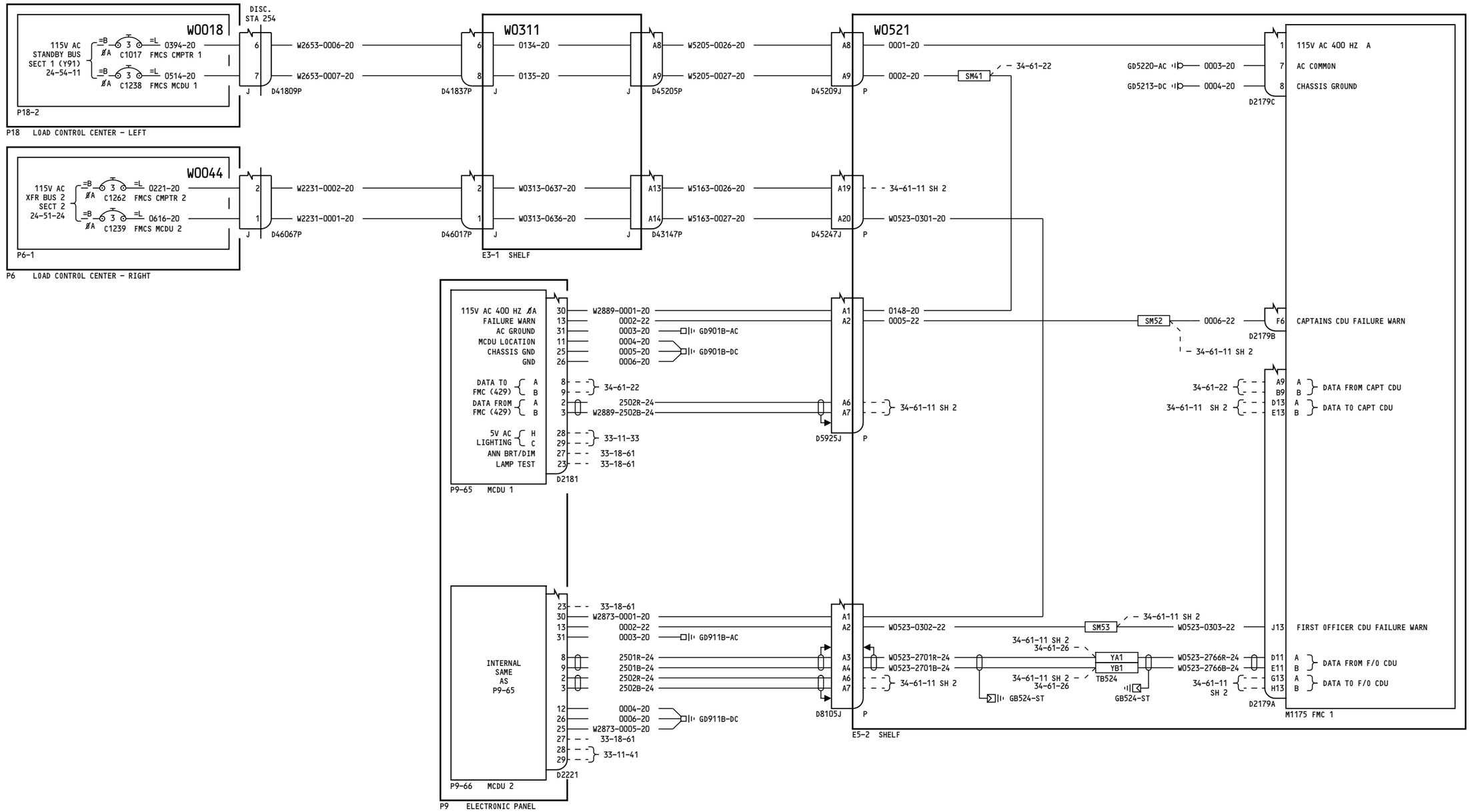

YT109-YT110, YT130-YT133

FMCS POWER AND DISPLAY

D280A351

BOEING PROPRIETARY - Copyright © - Unpublished Work - See title page for details.

34-61-11

Page 2
Sheet 1
Jun 21/2016

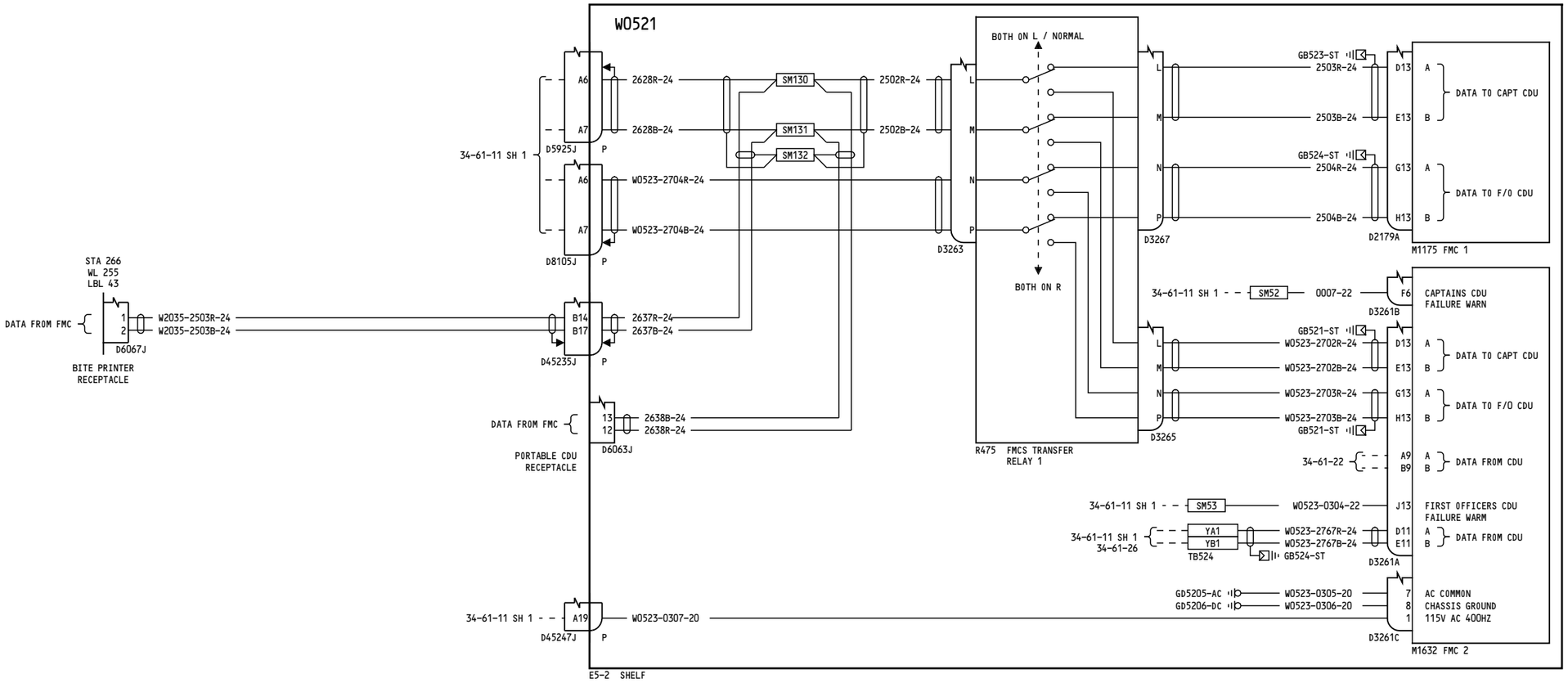

BOEING PROPRIETARY - Copyright © - Unpublished Work - See title page for details.

34-61-11

Page 2
Sheet 2
Jun 21/2016

74

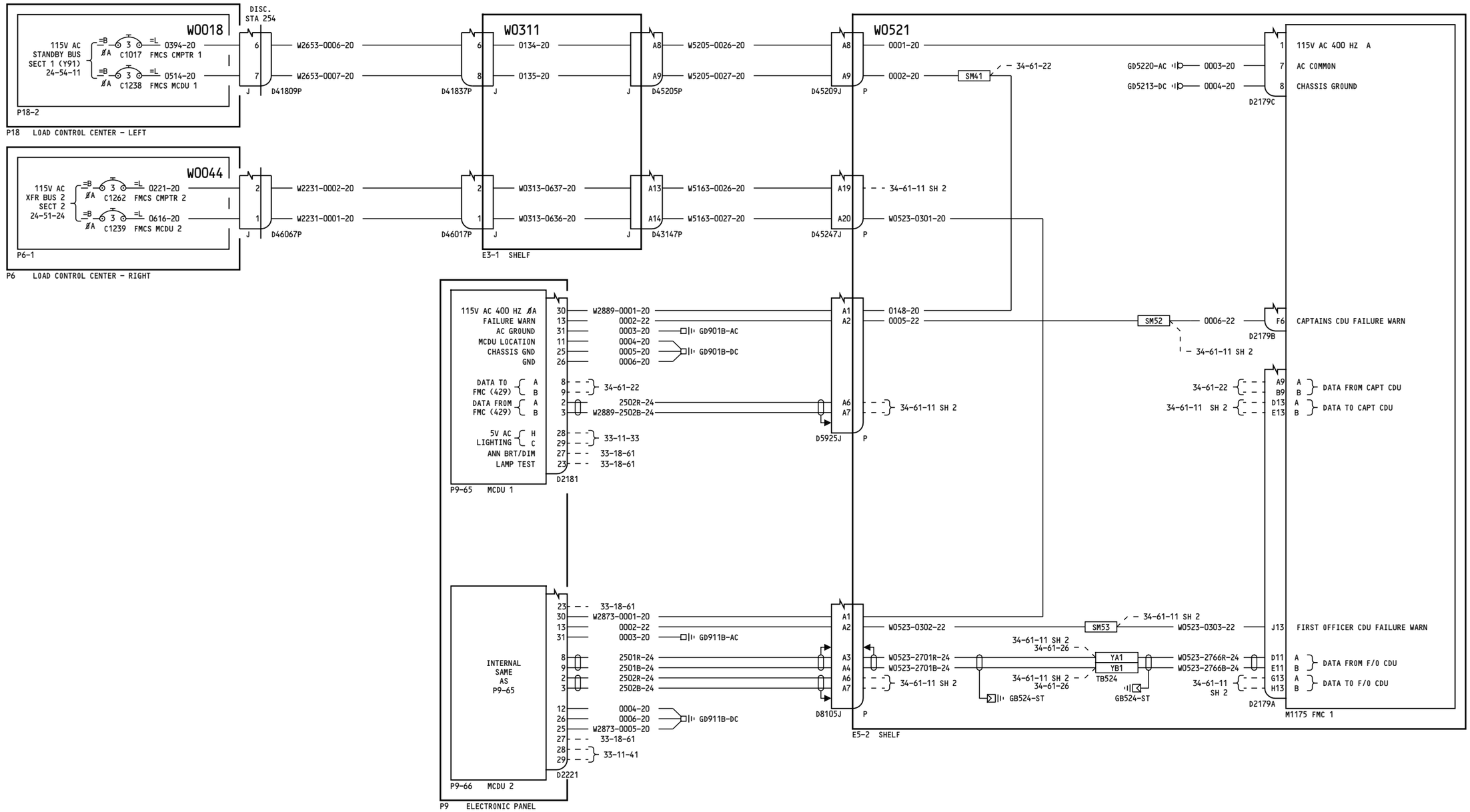

BOEING PROPRIETARY - Copyright © - Unpublished Work - See title page for details.

34-61-11

Page 3
Sheet 1
Mar 14/2016

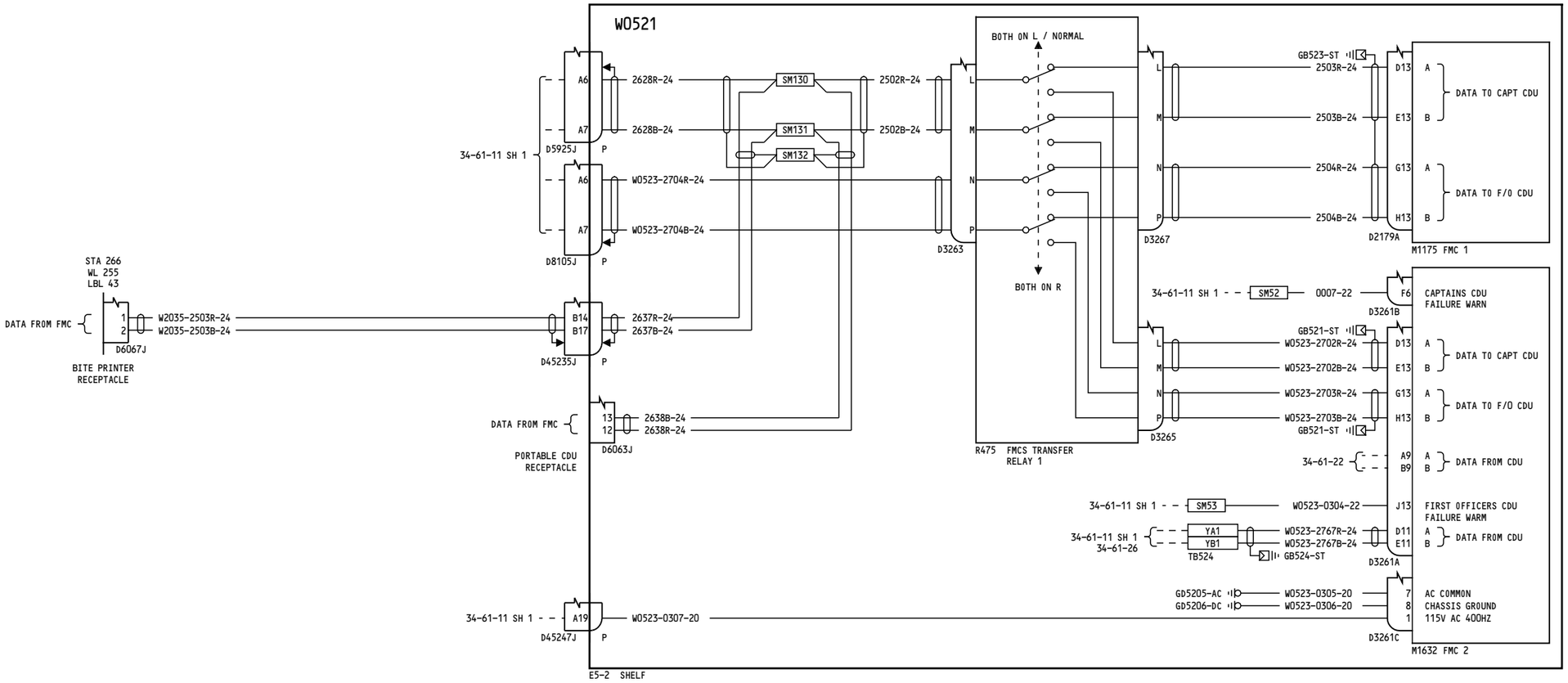

YT111-YT120	**FMCS POWER AND DISPLAY**
	D280A351

34-61-11

Page 3
Sheet 2
Mar 14/2016

BOEING PROPRIETARY - Copyright © - Unpublished Work - See title page for details.

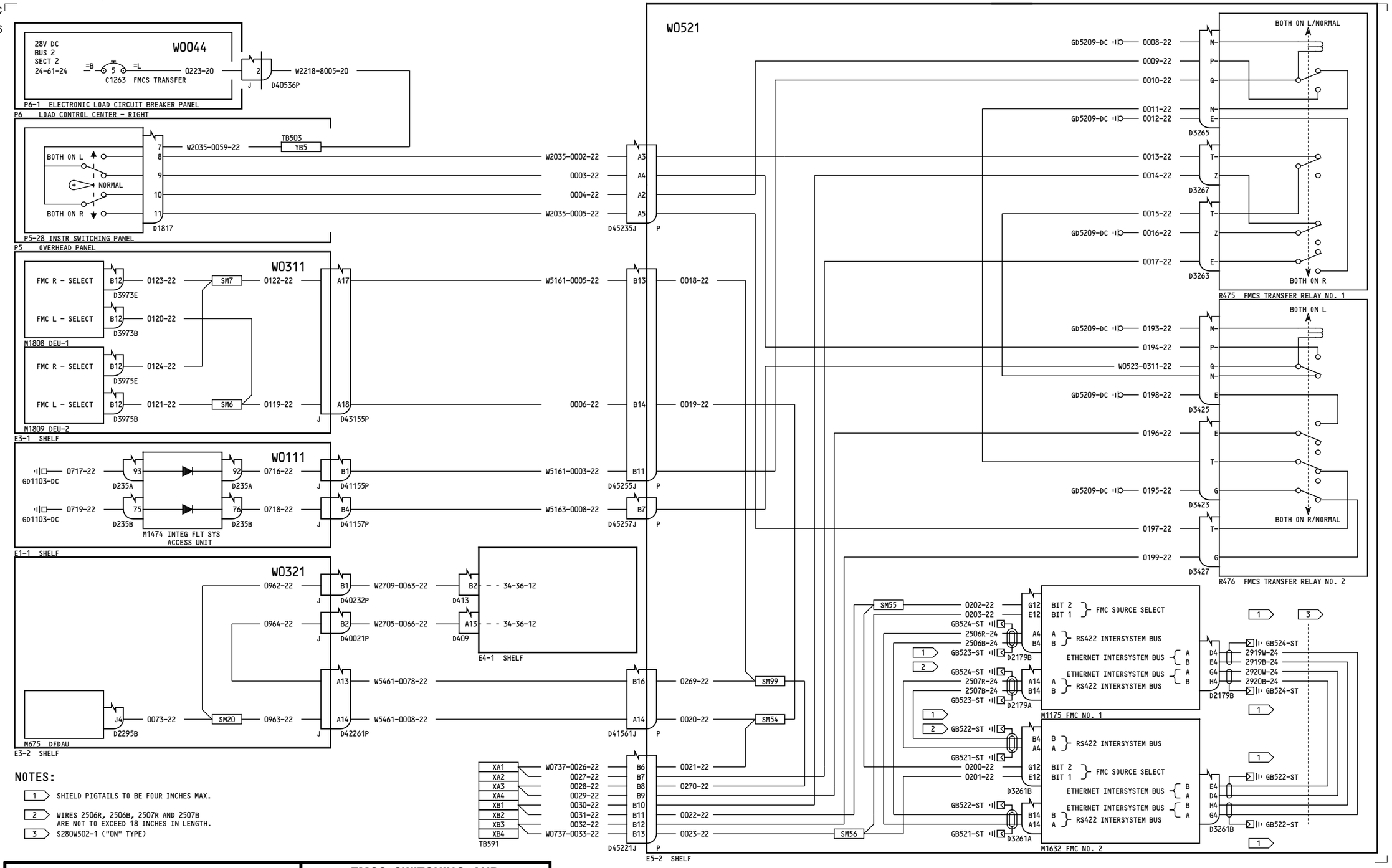

NOTES:

1. SHIELD PIGTAILS TO BE FOUR INCHES MAX.
2. WIRES 2506R, 2506B, 2507R AND 2507B ARE NOT TO EXCEED 18 INCHES IN LENGTH.
3. S280W502-1 ("ON" TYPE)

ALL	FMCS SWITCHING AND INTER-SYSTEM BUS
	D280A351

34-61-12
Page 1
Jun 21/2016

BOEING PROPRIETARY - Copyright © - Unpublished Work - See title page for details.

-D
1

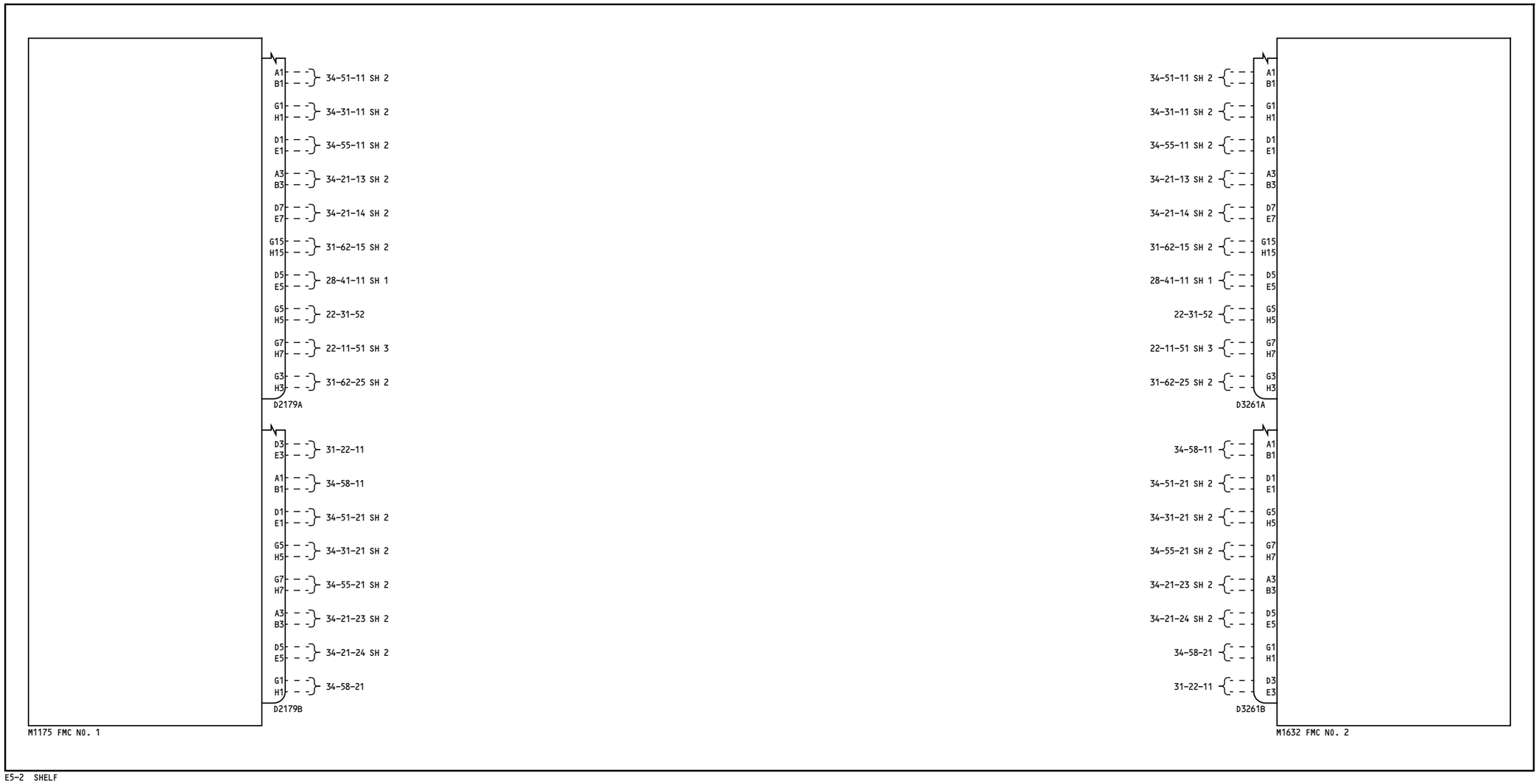

ALL	FMCS ARINC 429 INPUTS
	D280A351

BOEING PROPRIETARY - Copyright © - Unpublished Work - See title page for details.

34-61-13
Page 1
Jun 21/2016

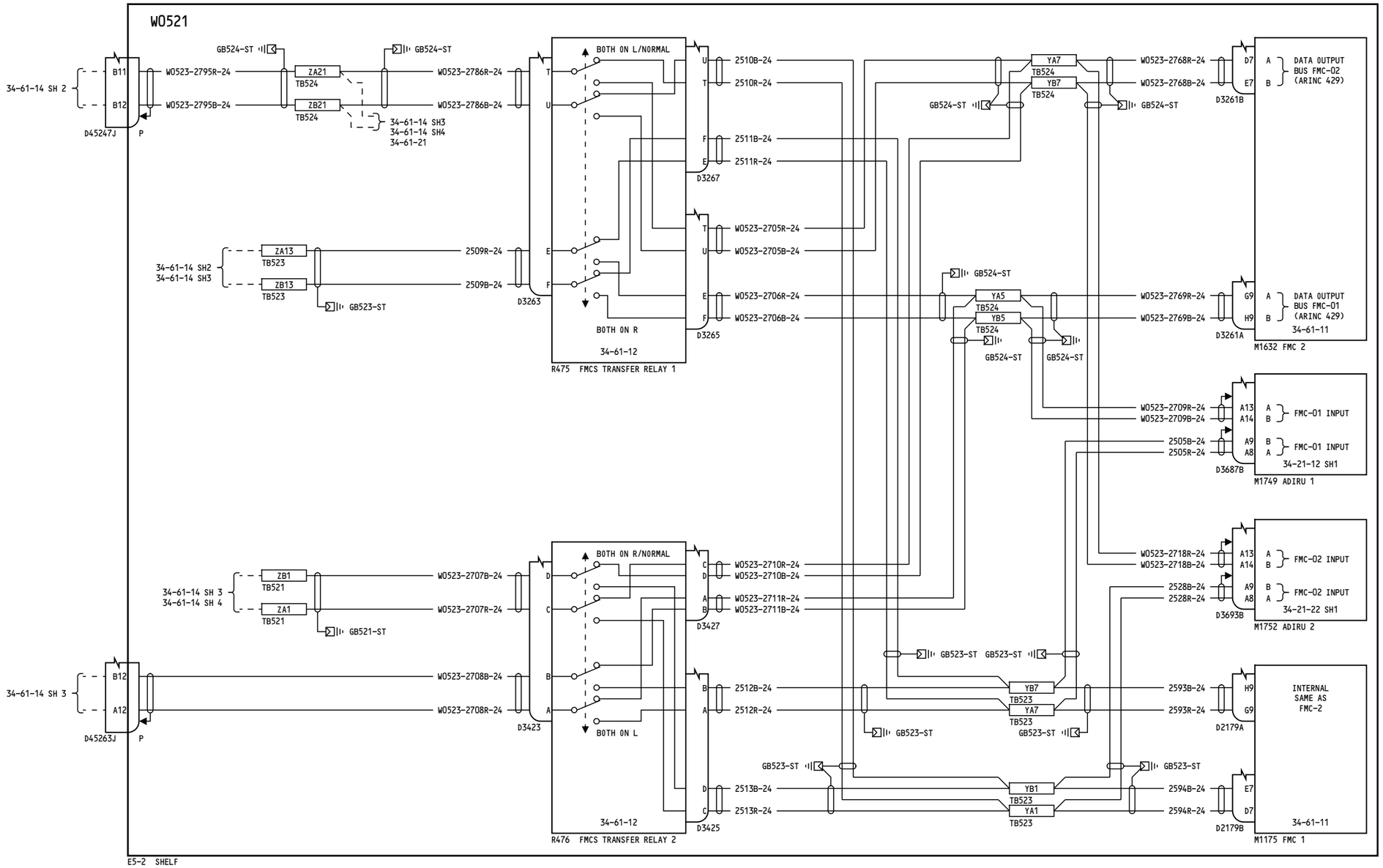

YT101-YT103	**FMCS GENERAL OUTPUT BUSES FMC-01 AND FMC-02**
	D280A351

BOEING PROPRIETARY - Copyright © - Unpublished Work - See title page for details.

34-61-14
Page 1
Sheet 1
Aug 15/2013

43

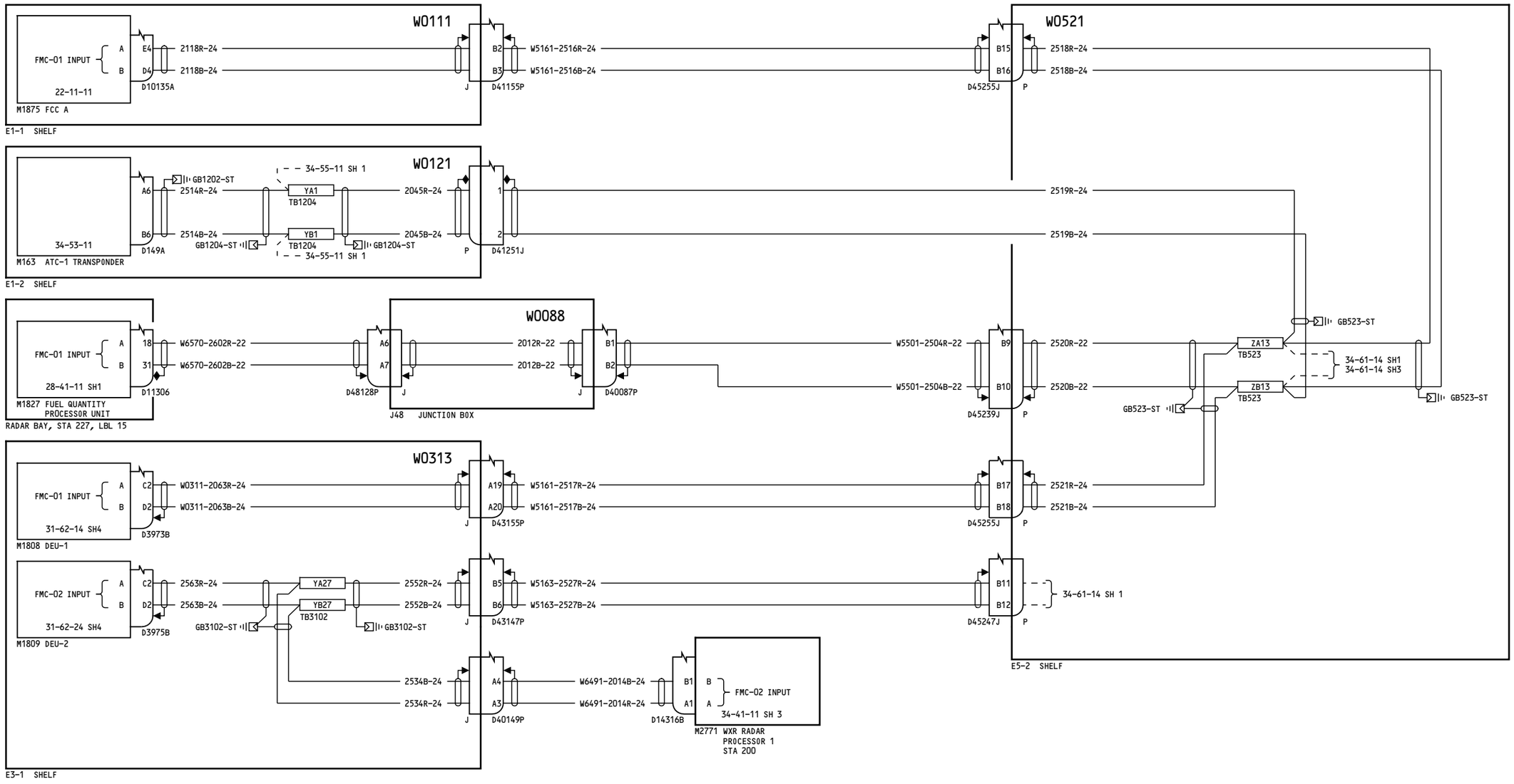

YT101-YT103

FMCS GENERAL OUTPUT BUSES FMC-01 AND FMC-02

D280A351

BOEING PROPRIETARY - Copyright © - Unpublished Work - See title page for details.

34-61-14

Page 1
Sheet 2
Aug 15/2013

-A
258

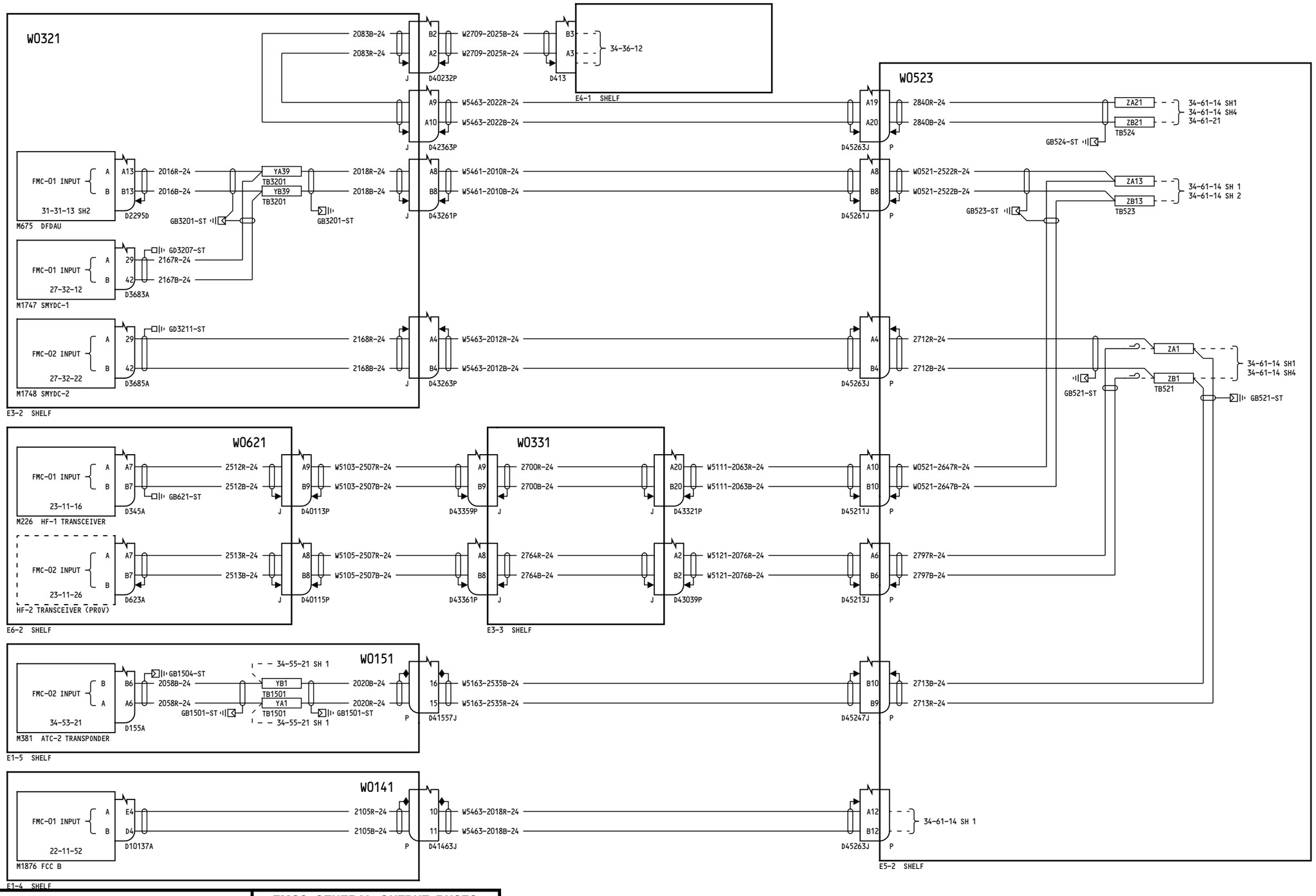

YT101-YT103

FMCS GENERAL OUTPUT BUSES
FMC-01 AND FMC-02

D280A351

34-61-14

Page 1
Sheet 3
Aug 15/2013

BOEING PROPRIETARY - Copyright © - Unpublished Work - See title page for details.

2

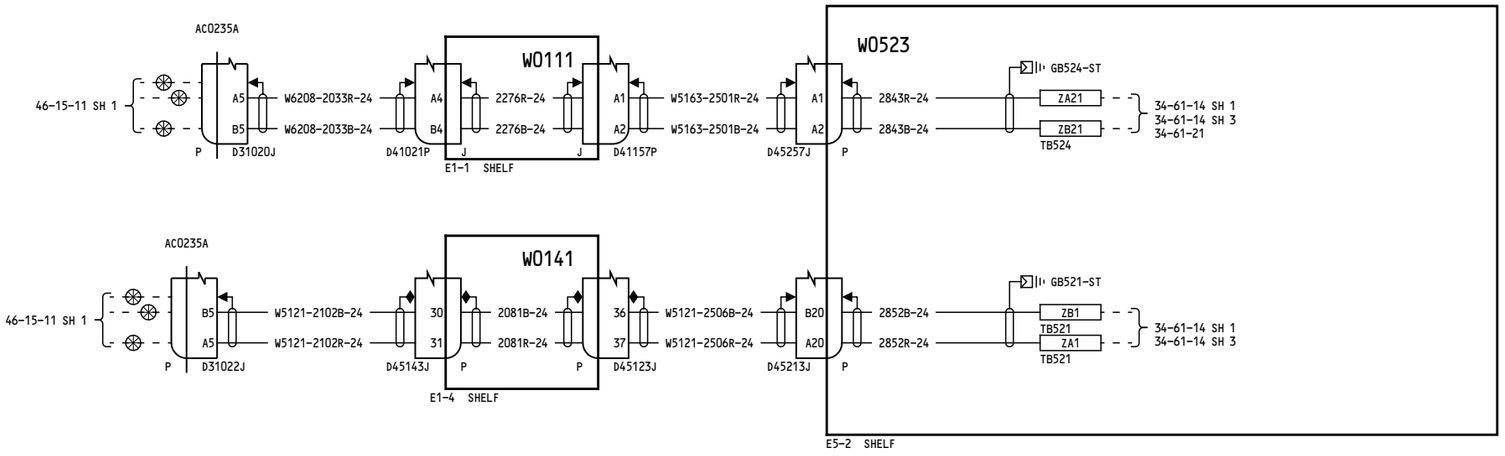

YT101-YT103	FMCS GENERAL OUTPUT BUSES FMC-01 AND FMC-02 D280A351

BOEING PROPRIETARY - Copyright © - Unpublished Work - See title page for details.

34-61-14

Page 1
Sheet 4
Feb 14/2014

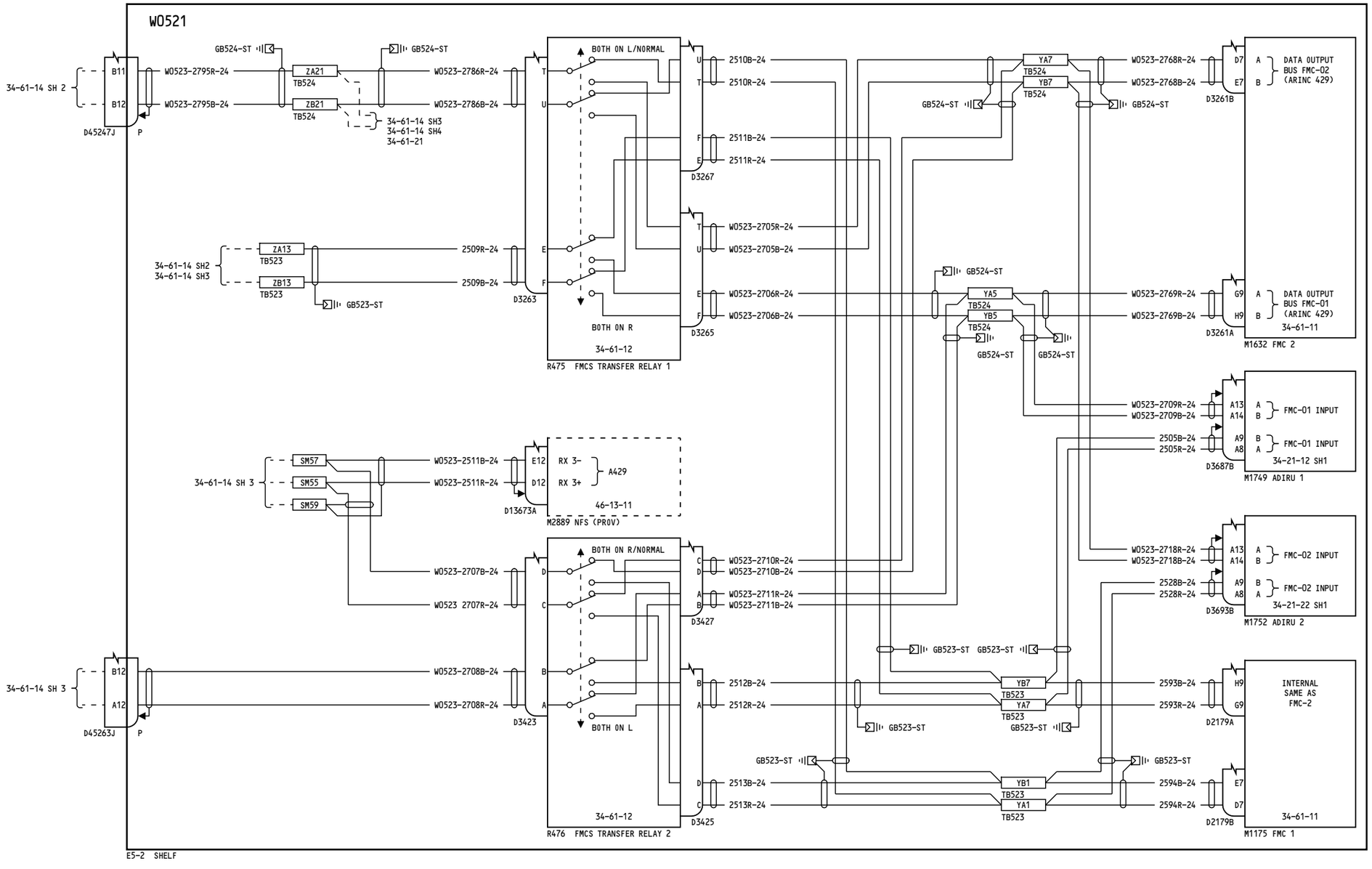

YT104	FMCS GENERAL OUTPUT BUSES FMC-01 AND FMC-02	34-61-14	34-61-14
	D280A351	Page 2 Sheet 1 Nov 18/2013	Page 2 Sheet 1 Nov 18/2013

BOEING PROPRIETARY - Copyright © - Unpublished Work - See title page for details.

43

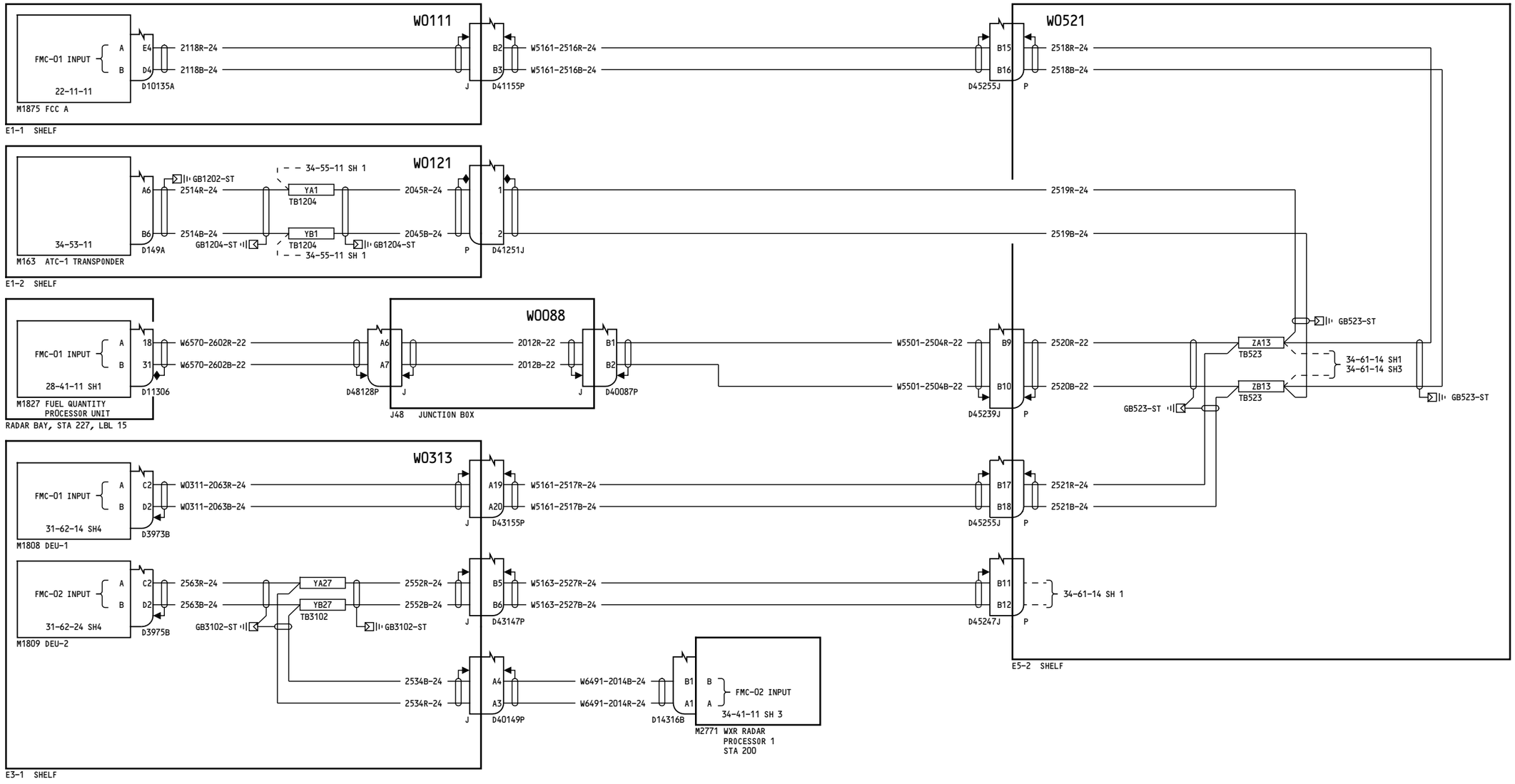

YT104

FMCS GENERAL OUTPUT BUSES FMC-01 AND FMC-02

D280A351

BOEING PROPRIETARY - Copyright © - Unpublished Work - See title page for details.

34-61-14

Page 2
Sheet 2
Nov 18/2013

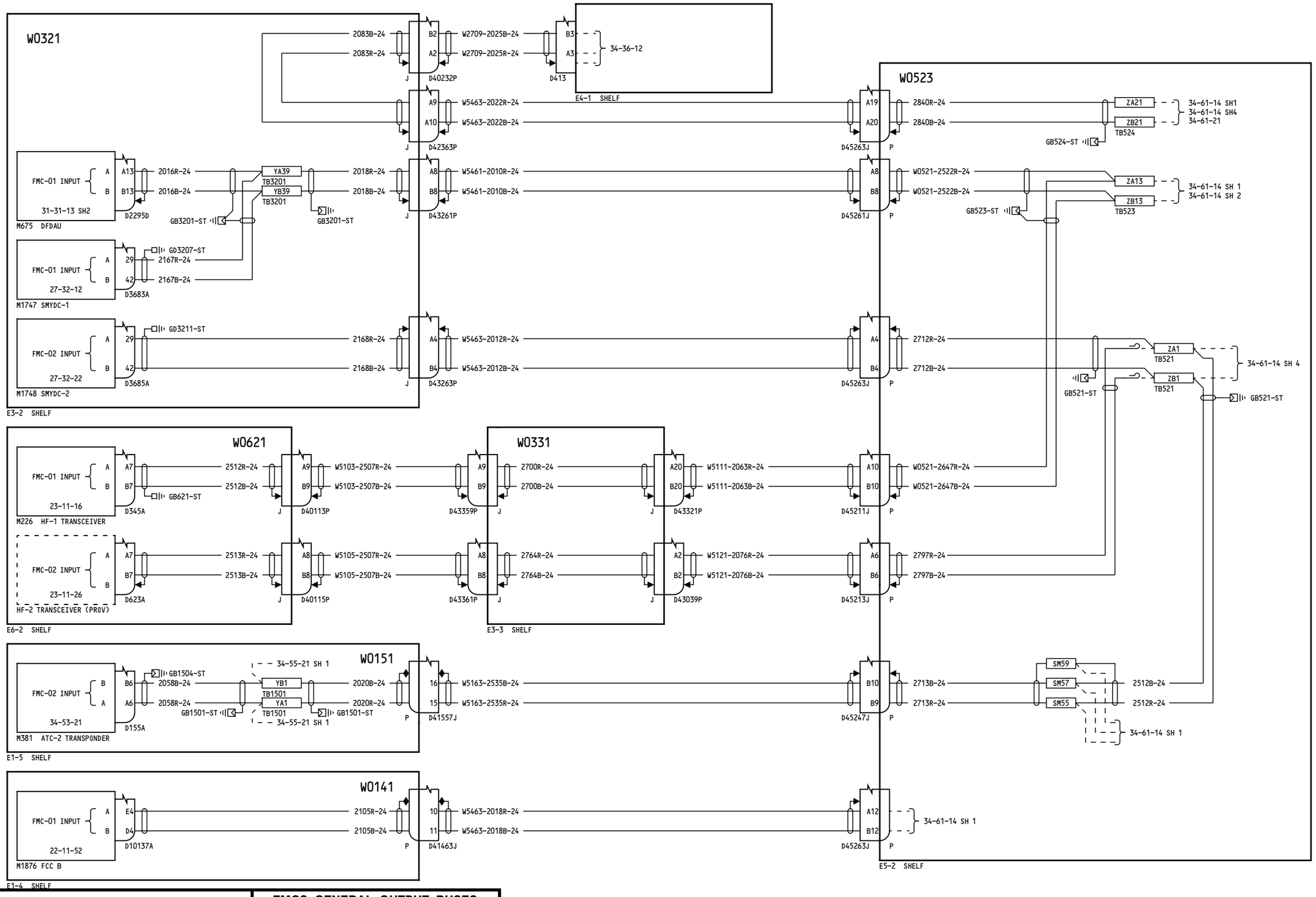

YT104

FMCS GENERAL OUTPUT BUSES FMC-01 AND FMC-02

D280A351

34-61-14

Page 2
Sheet 3
Nov 18/2013

BOEING PROPRIETARY - Copyright © - Unpublished Work - See title page for details.

-B
1

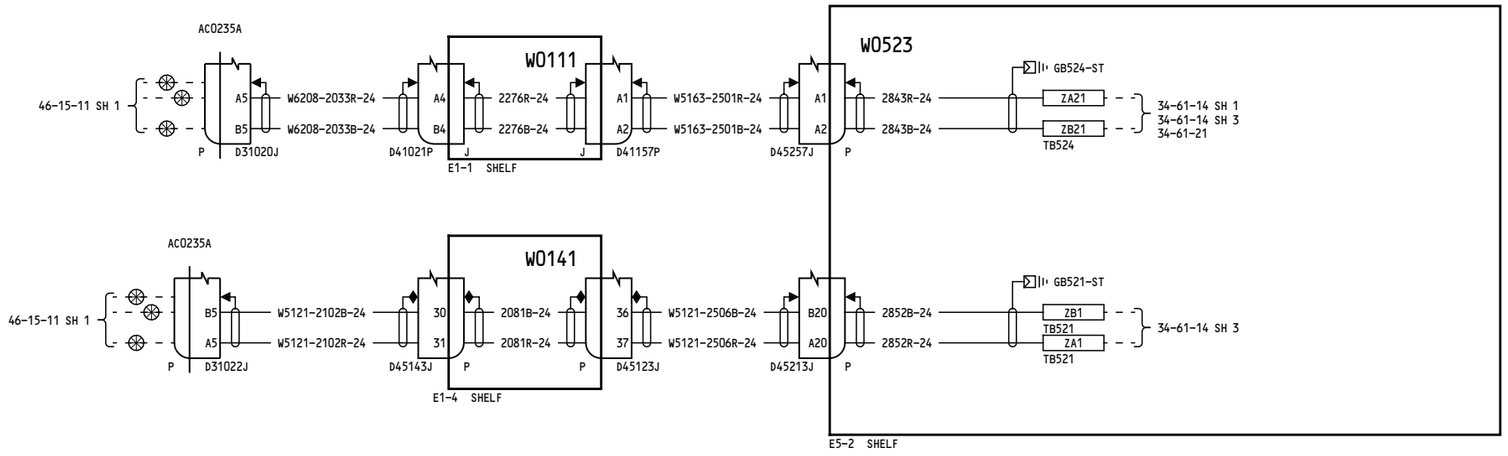

YT104	FMCS GENERAL OUTPUT BUSES FMC-01 AND FMC-02 D280A351

BOEING PROPRIETARY - Copyright © - Unpublished Work - See title page for details.

34-61-14
Page 2
Sheet 4
Nov 18/2013

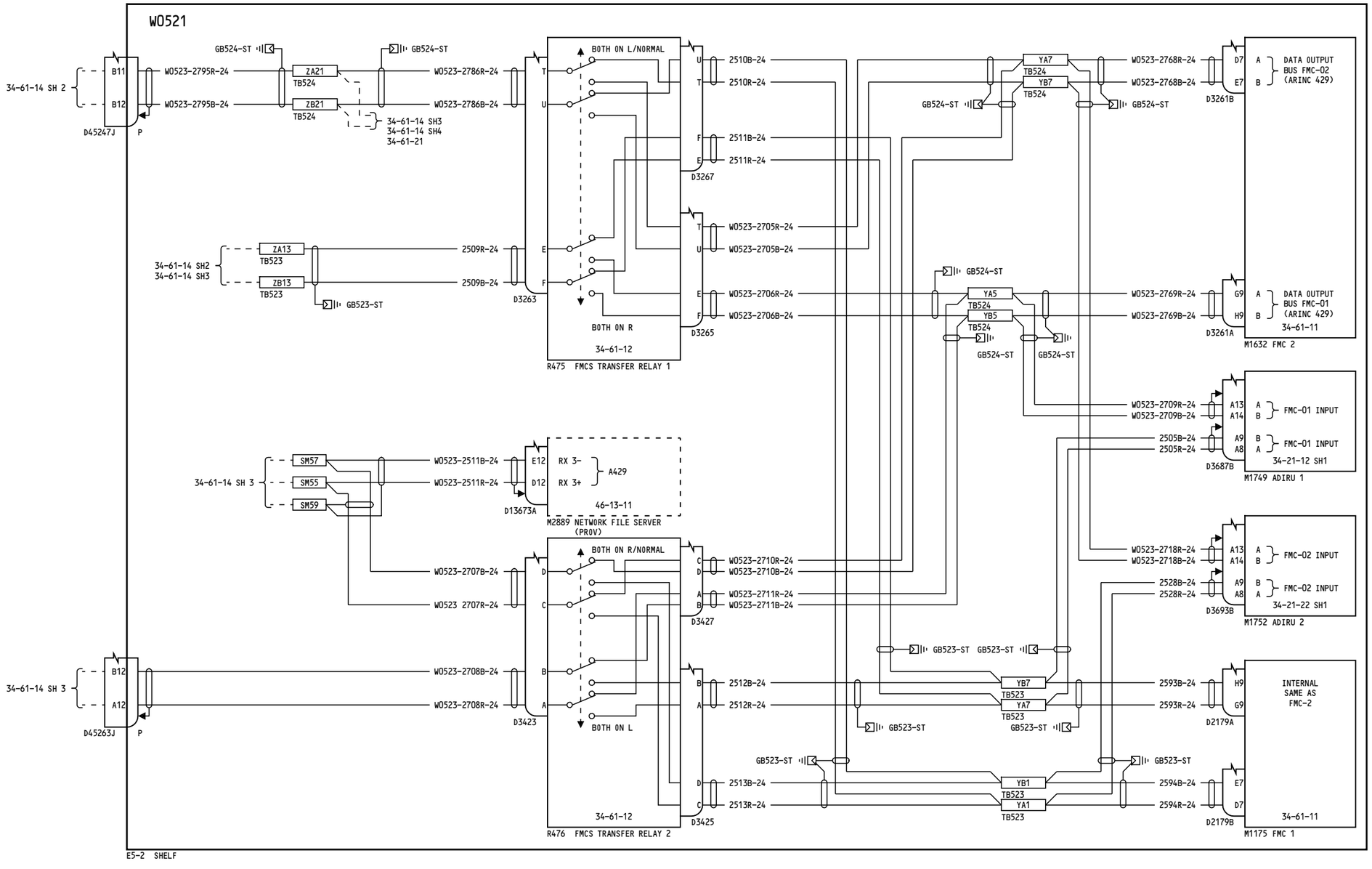

YT105

FMCS GENERAL OUTPUT BUSES FMC-01 AND FMC-02

D280A351

BOEING PROPRIETARY - Copyright © - Unpublished Work - See title page for details.

34-61-14

Page 3
Sheet 1
Apr 17/2014

43

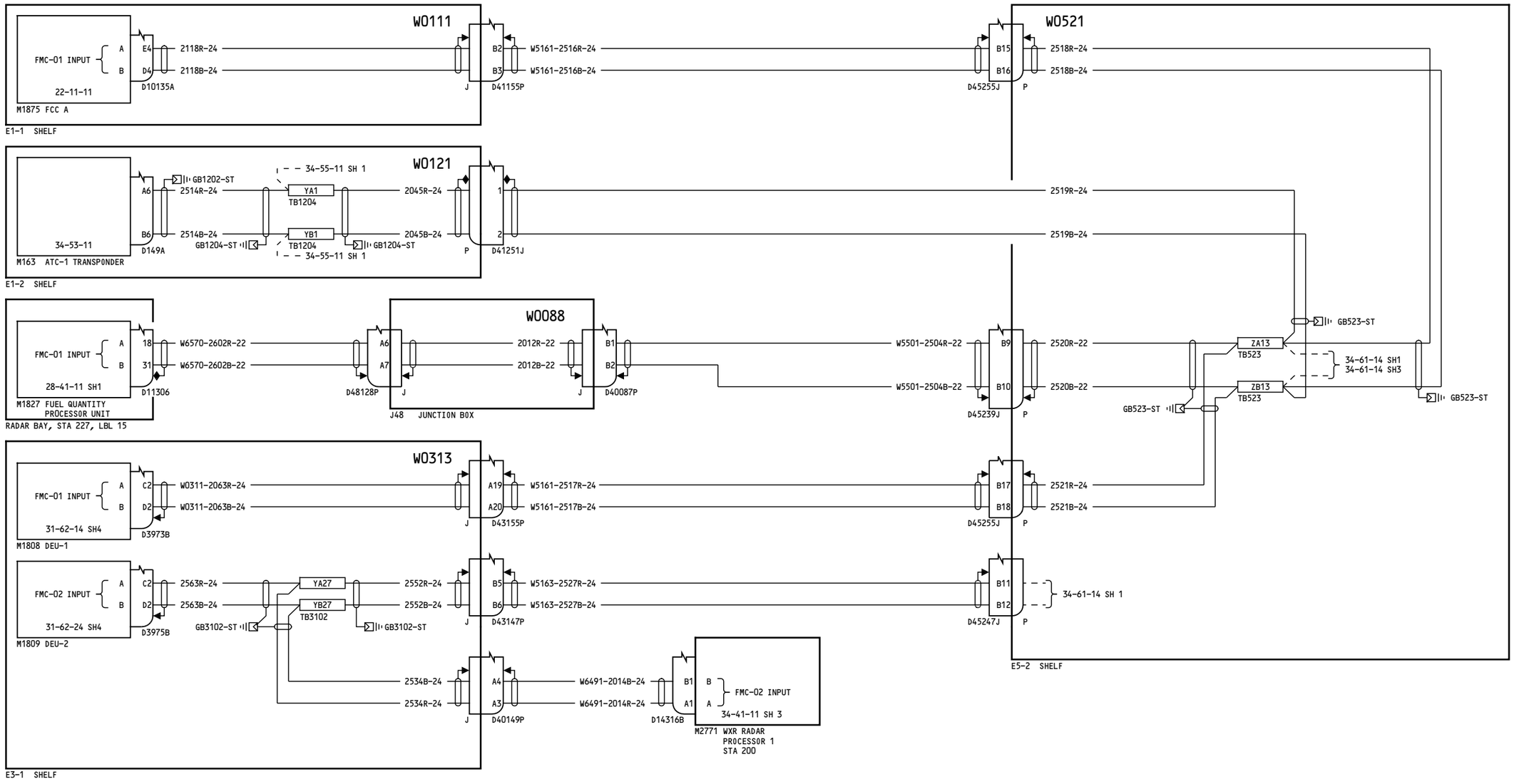

YT105

FMCS GENERAL OUTPUT BUSES FMC-01 AND FMC-02

D280A351

BOEING PROPRIETARY - Copyright © - Unpublished Work - See title page for details.

34-61-14

Page 3
Sheet 2
Apr 17/2014

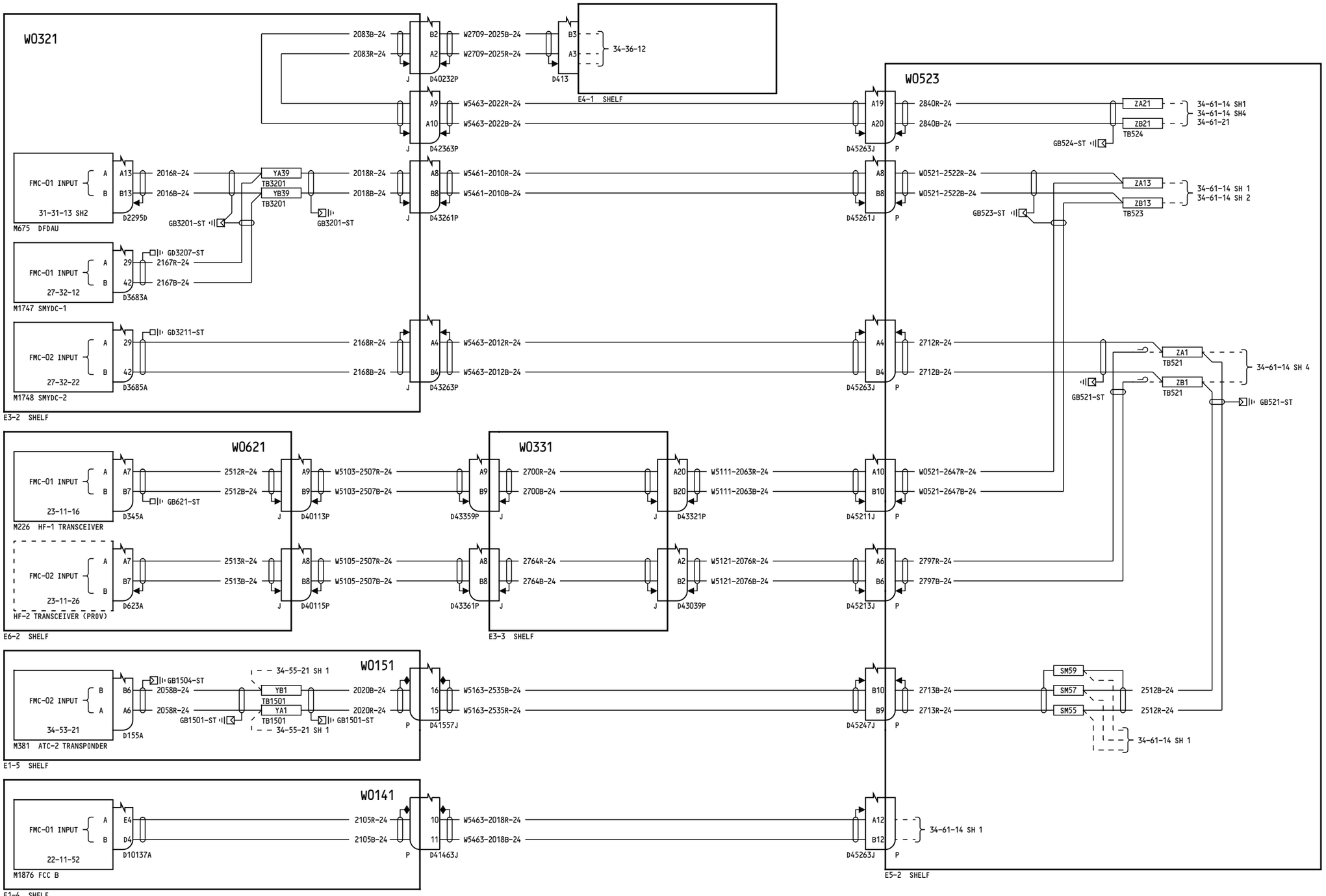

YT105

FMCS GENERAL OUTPUT BUSES FMC-01 AND FMC-02

D280A351

34-61-14

Page 3
Sheet 3
Apr 17/2014

BOEING PROPRIETARY - Copyright © - Unpublished Work - See title page for details.

-B
1

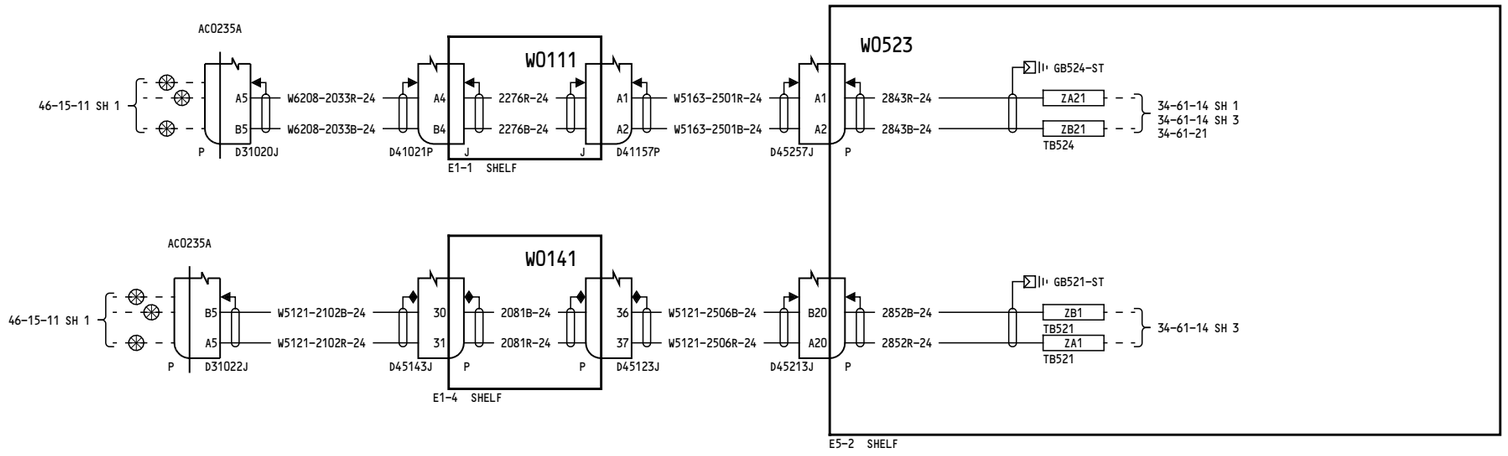

YT105	FMCS GENERAL OUTPUT BUSES FMC-01 AND FMC-02 D280A351

BOEING PROPRIETARY - Copyright © - Unpublished Work - See title page for details.

34-61-14
Page 3
Sheet 4
Apr 17/2014

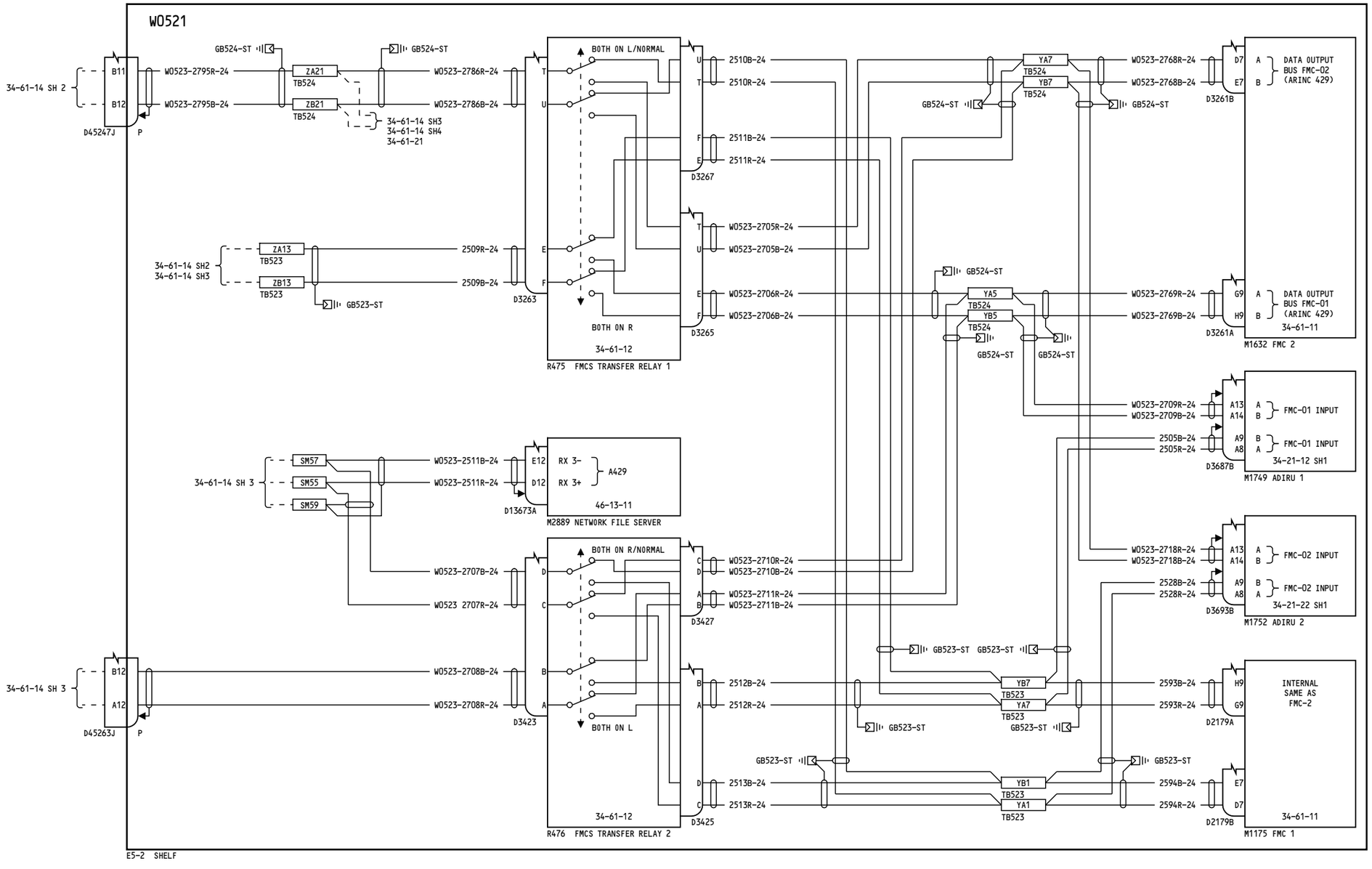

YT106-YT109	**FMCS GENERAL OUTPUT BUSES FMC-01 AND FMC-02**
	D280A351

BOEING PROPRIETARY - Copyright © - Unpublished Work - See title page for details.

34-61-14

Page 4
Sheet 1
Oct 14/2014

43

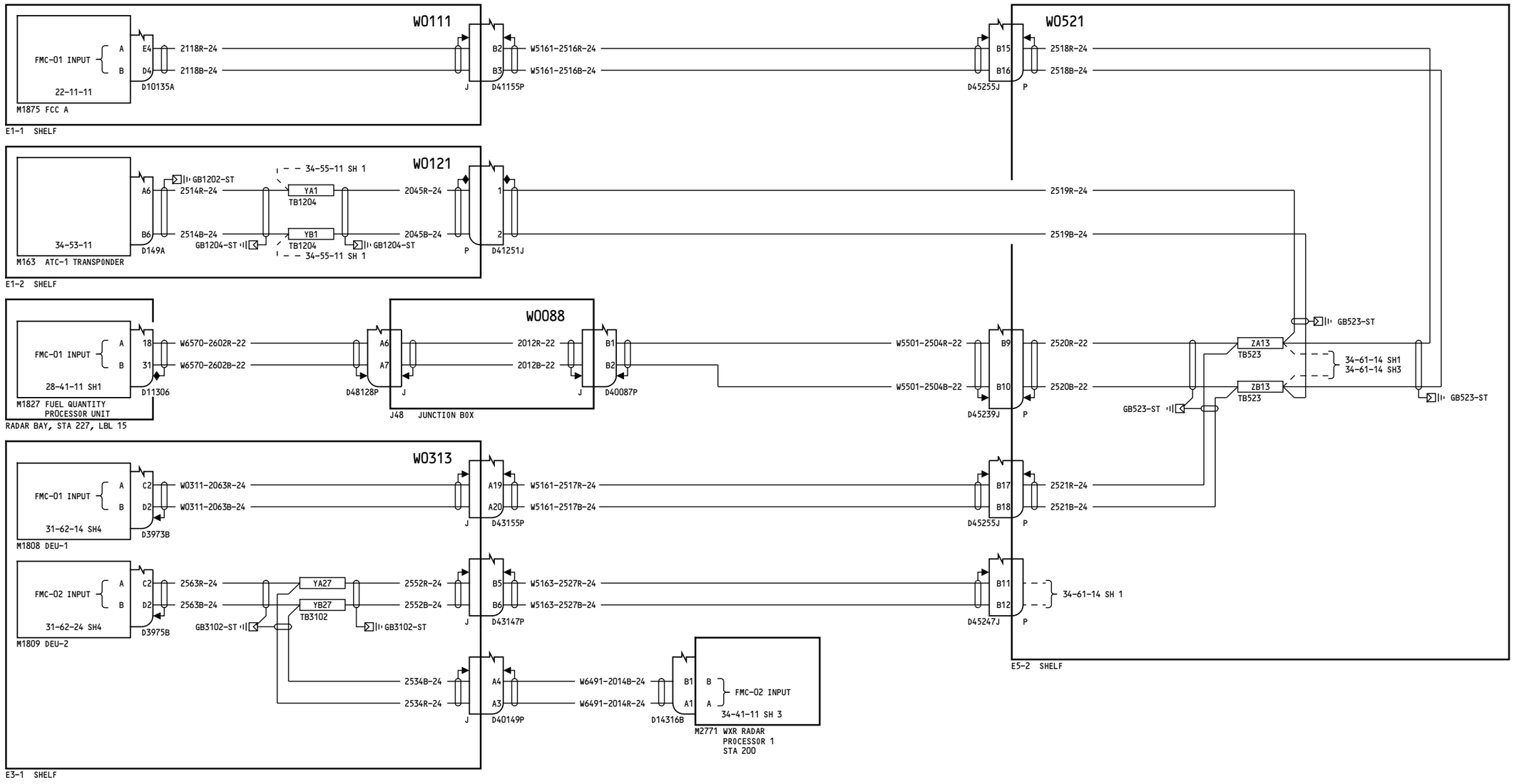

YT106-YT109

FMCS GENERAL OUTPUT BUSES FMC-01 AND FMC-02

D280A351

BOEING PROPRIETARY - Copyright © - Unpublished Work - See title page for details.

34-61-14

Page 4
Sheet 2
Oct 14/2014

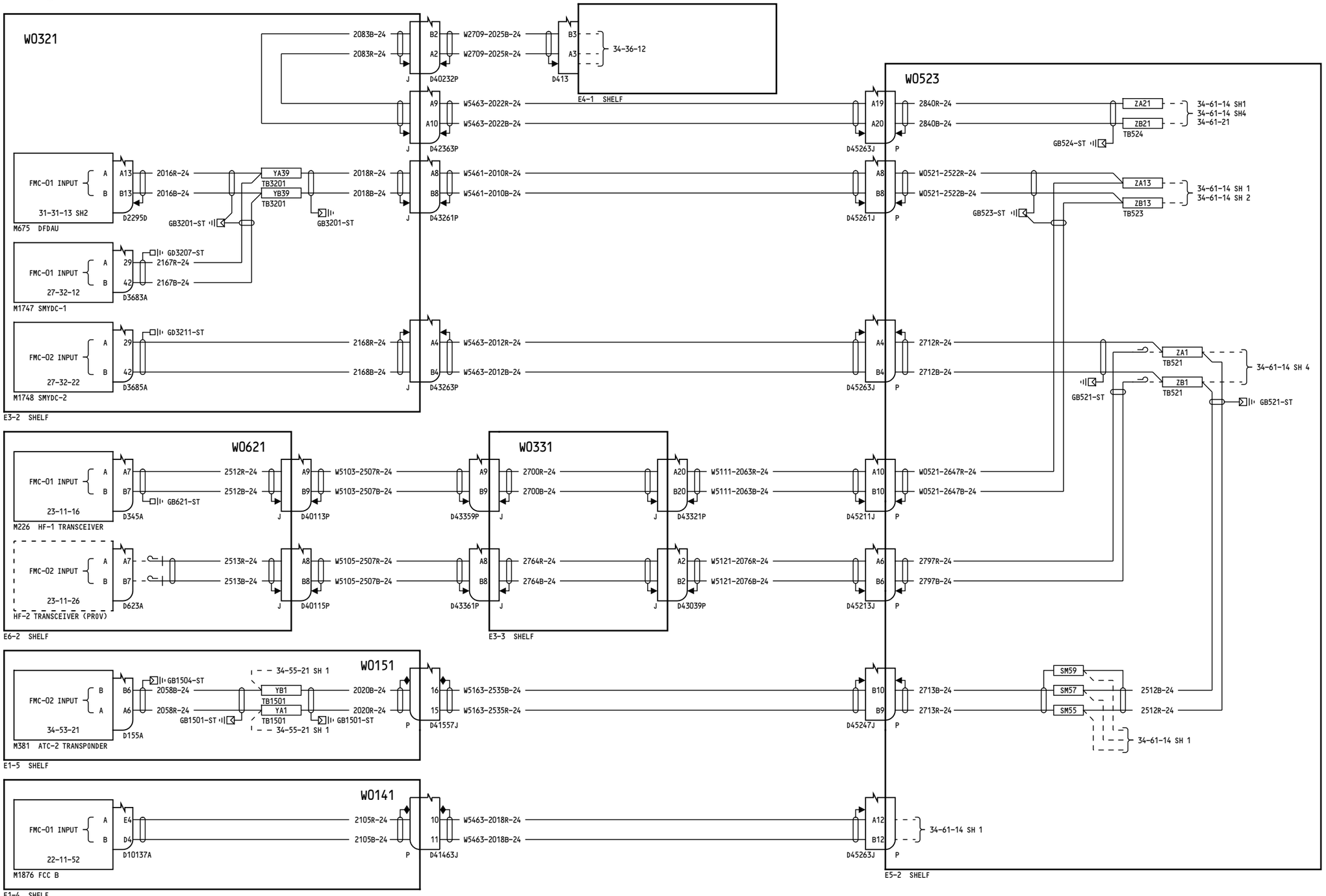

YT106-YT109

FMCS GENERAL OUTPUT BUSES FMC-01 AND FMC-02

D280A351

34-61-14

Page 4
Sheet 3
Oct 14/2014

BOEING PROPRIETARY - Copyright © - Unpublished Work - See title page for details.

-B
1

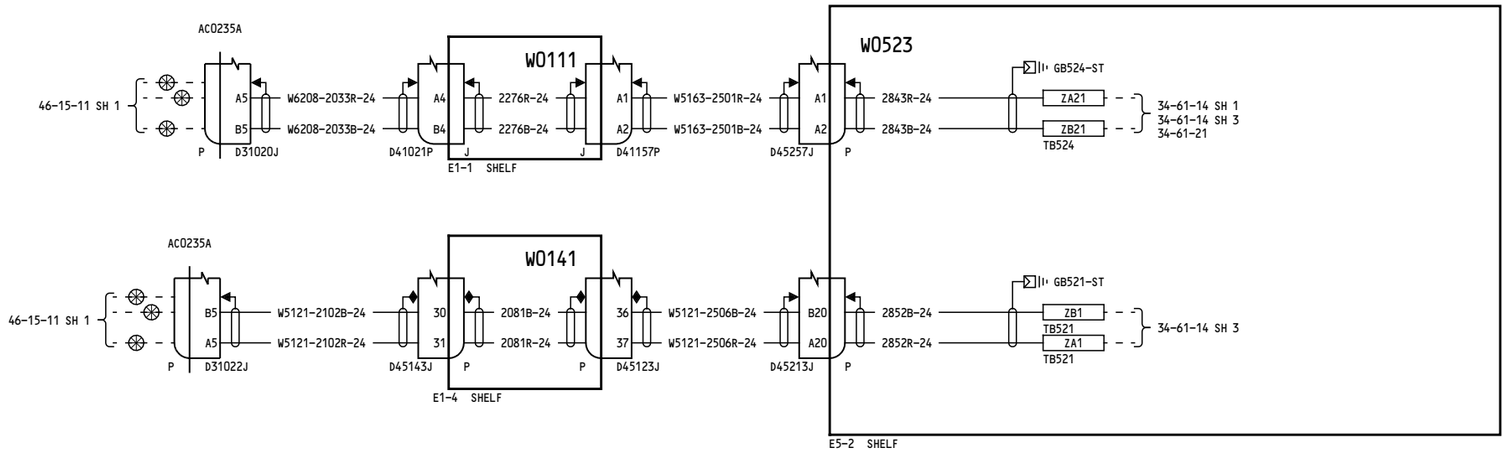

YT106-YT109	FMCS GENERAL OUTPUT BUSES FMC-01 AND FMC-02 D280A351

BOEING PROPRIETARY - Copyright © - Unpublished Work - See title page for details.

34-61-14
Page 4
Sheet 4
Oct 14/2014

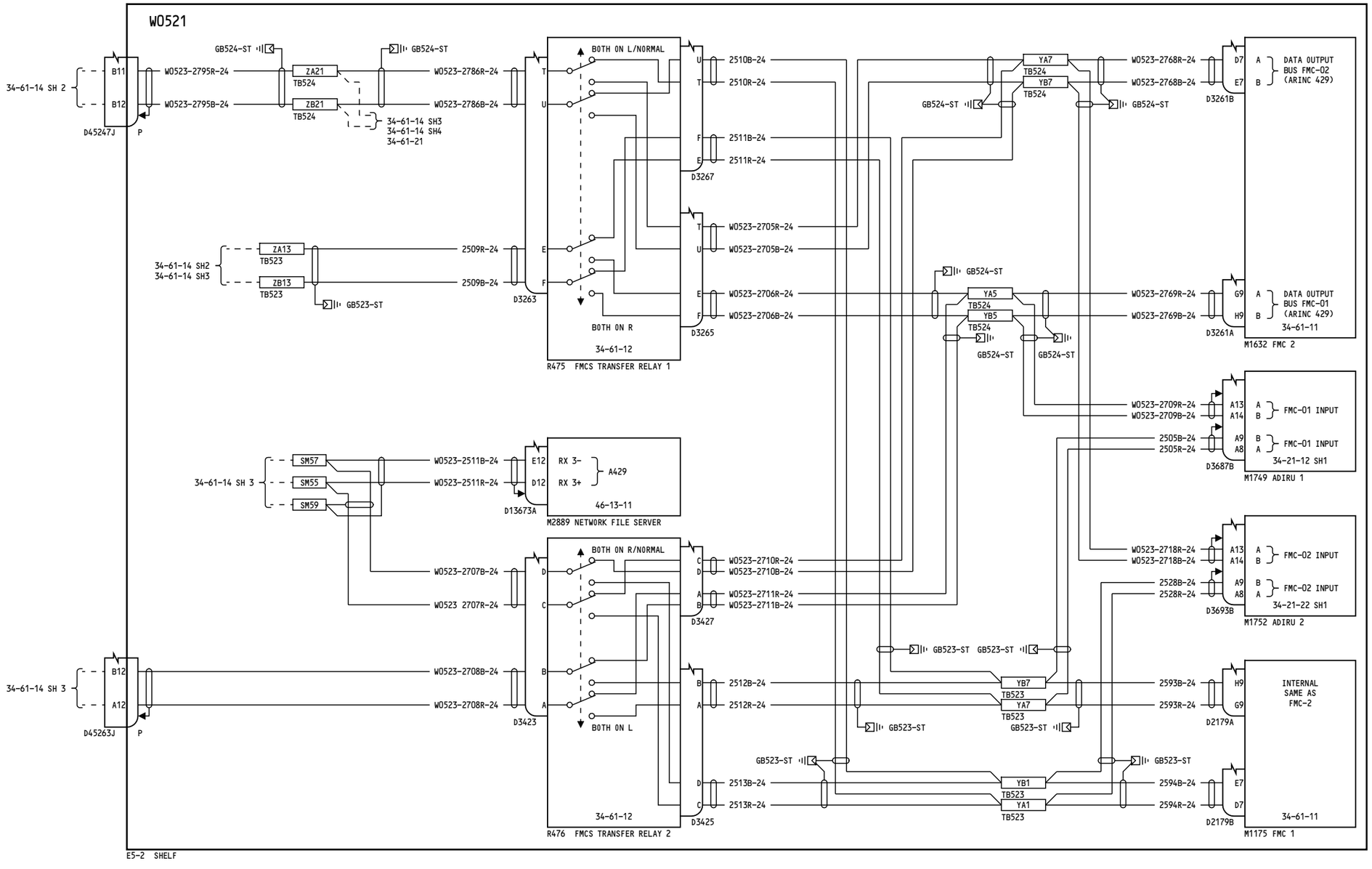

YT110

FMCS GENERAL OUTPUT BUSES FMC-01 AND FMC-02

D280A351

BOEING PROPRIETARY - Copyright © - Unpublished Work - See title page for details.

34-61-14
Page 5
Sheet 1
May 15/2015

77

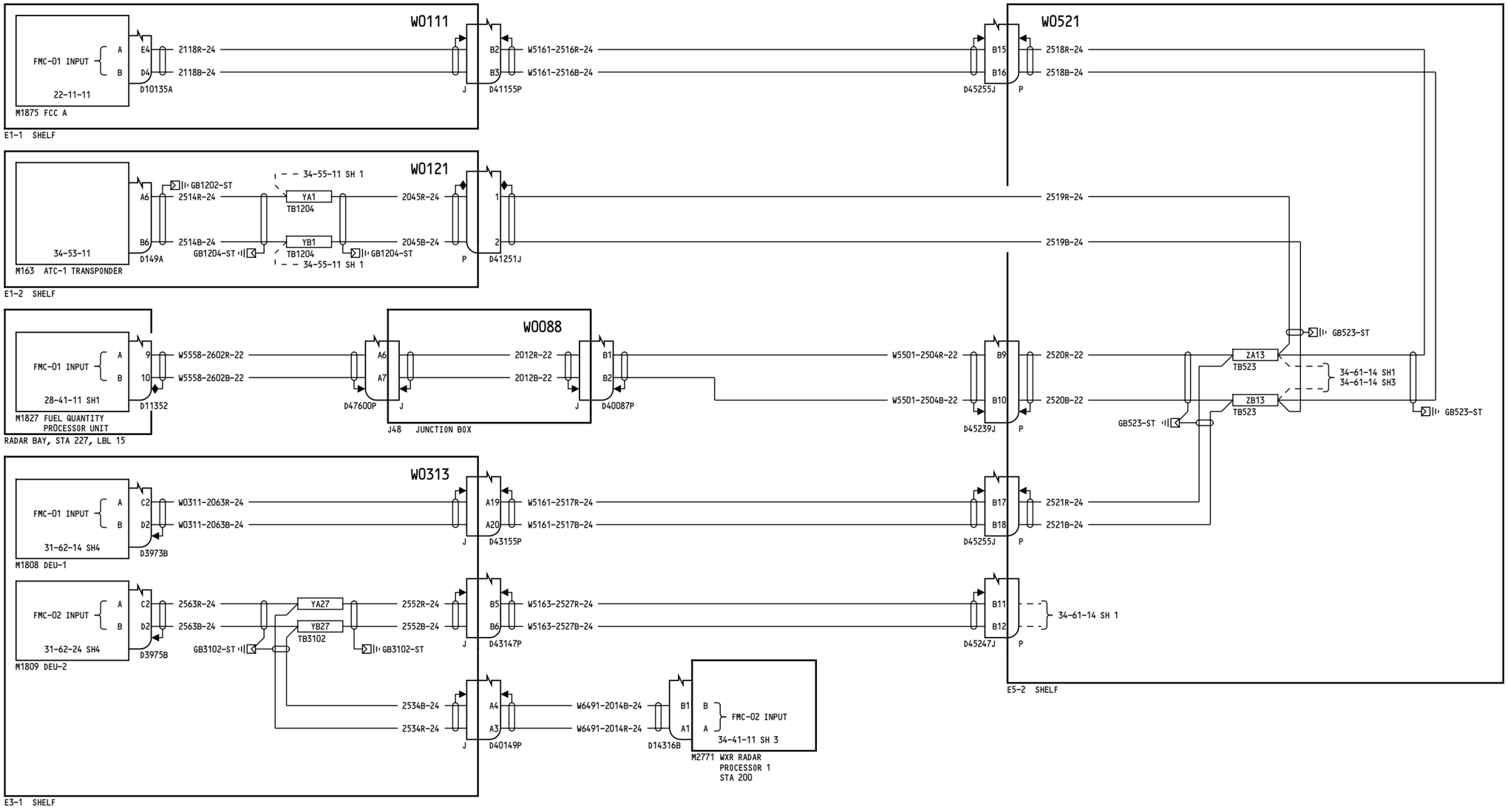

YT110

FMCS GENERAL OUTPUT BUSES FMC-01 AND FMC-02

D280A351

BOEING PROPRIETARY - Copyright © - Unpublished Work - See title page for details.

34-61-14

Page 5
Sheet 2
May 15/2015

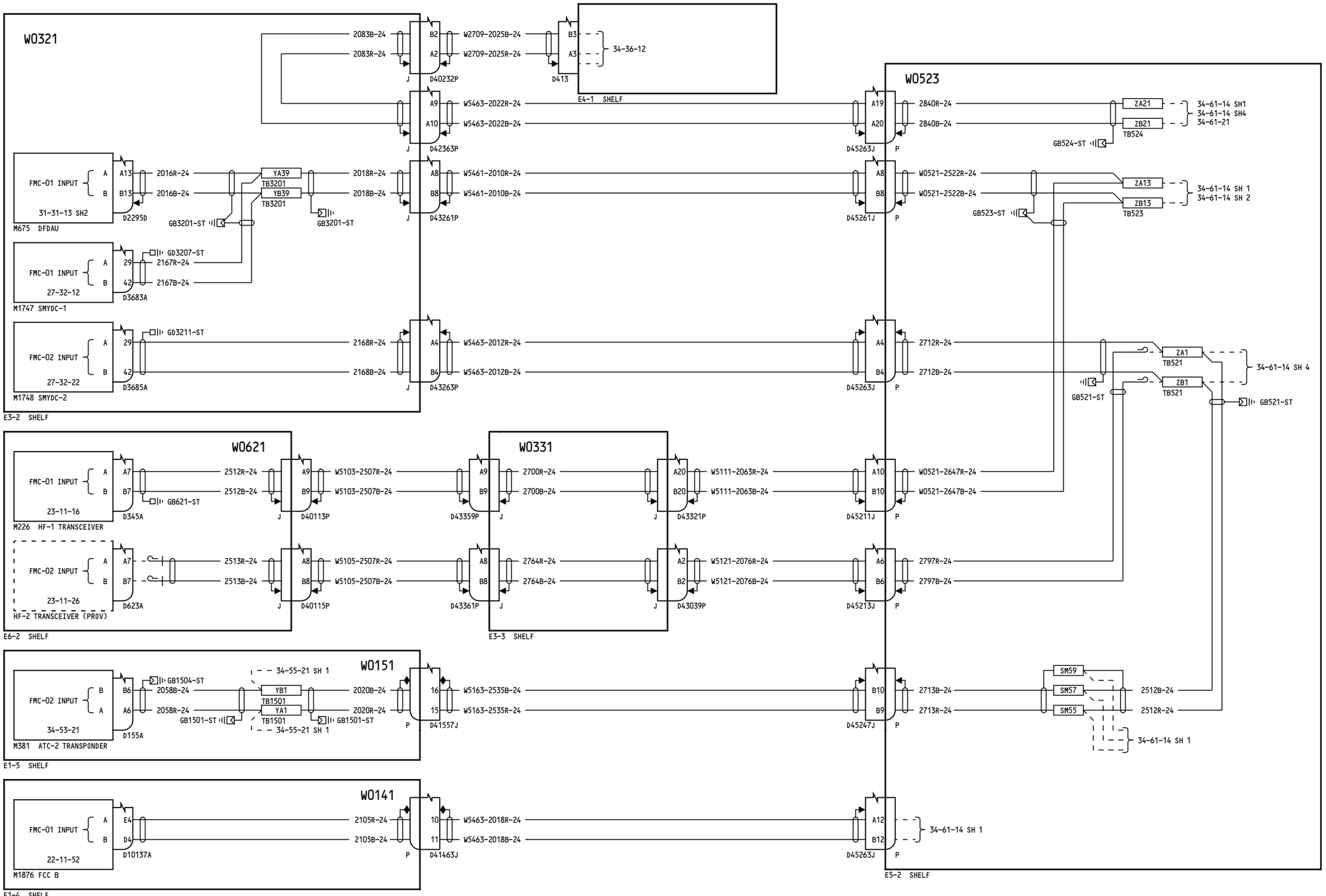

YT110

FMCS GENERAL OUTPUT BUSES
FMC-01 AND FMC-02

D280A351

34-61-14

Page 5
Sheet 3
May 15/2015

BOEING PROPRIETARY - Copyright © - Unpublished Work - See title page for details.

-B
1

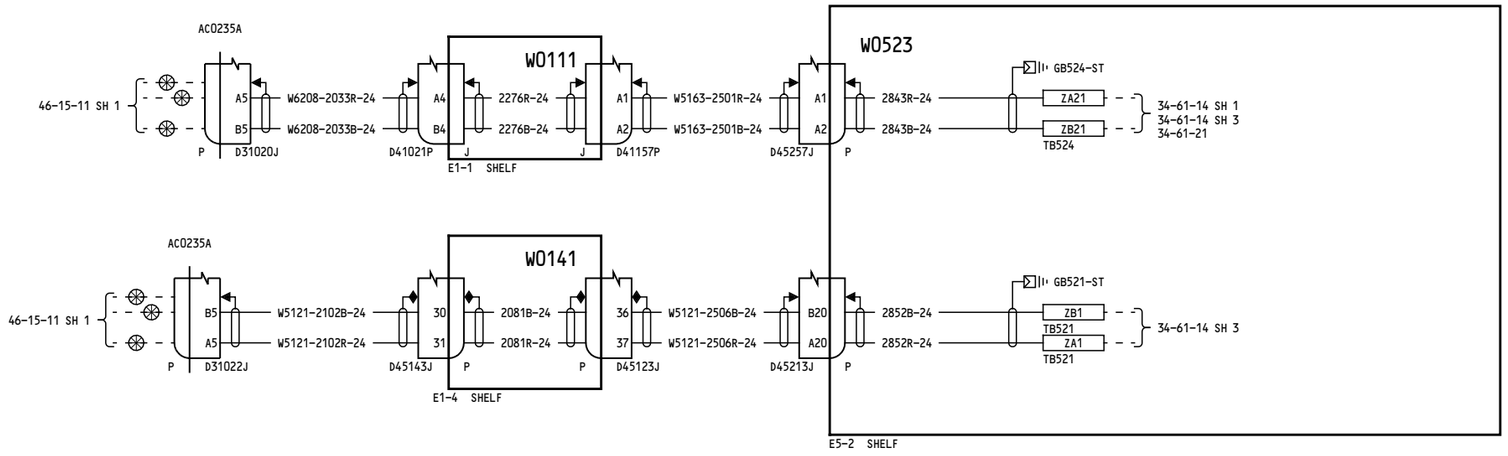

YT110	FMCS GENERAL OUTPUT BUSES FMC-01 AND FMC-02 D280A351

BOEING PROPRIETARY - Copyright © - Unpublished Work - See title page for details.

34-61-14
Page 5
Sheet 4
May 15/2015

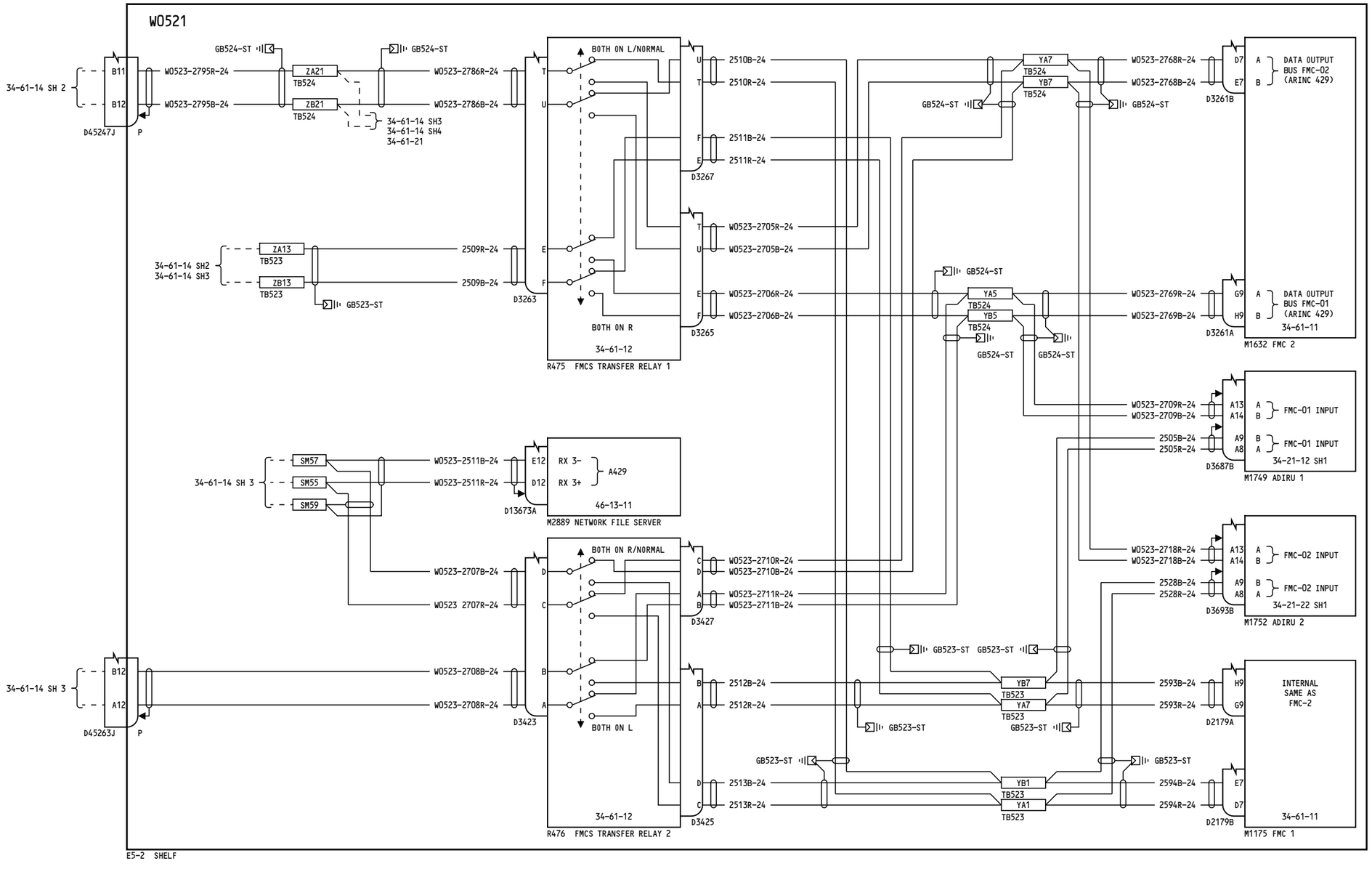

YT111-YT120	**FMCS GENERAL OUTPUT BUSES FMC-01 AND FMC-02**
	D280A351

BOEING PROPRIETARY - Copyright © - Unpublished Work - See title page for details.

34-61-14

Page 6
Sheet 1
Mar 14/2016

77

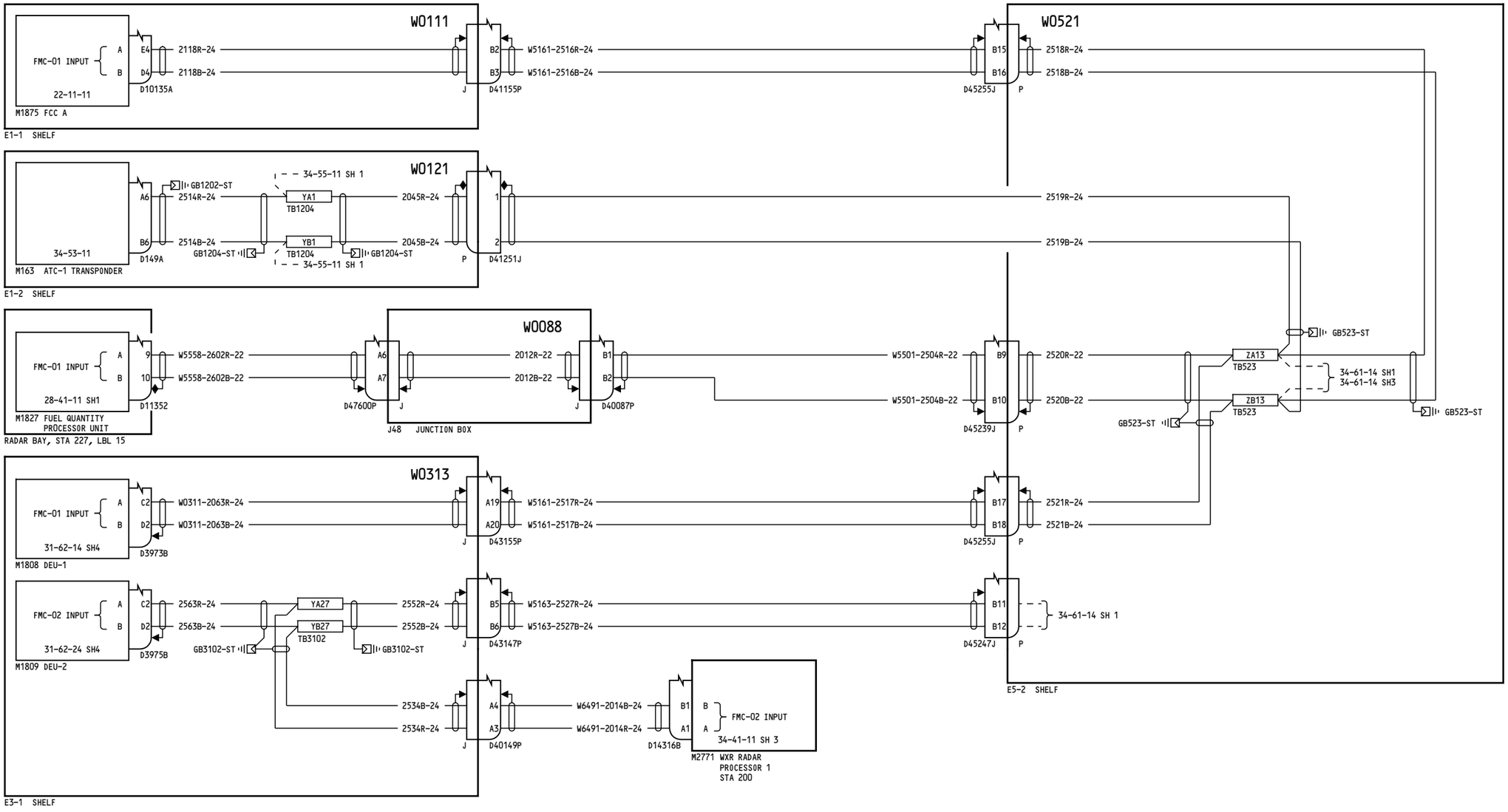

YT111-YT120	**FMCS GENERAL OUTPUT BUSES FMC-01 AND FMC-02**
	D280A351

BOEING PROPRIETARY - Copyright © - Unpublished Work - See title page for details.

34-61-14

Page 6
Sheet 2
Mar 14/2016

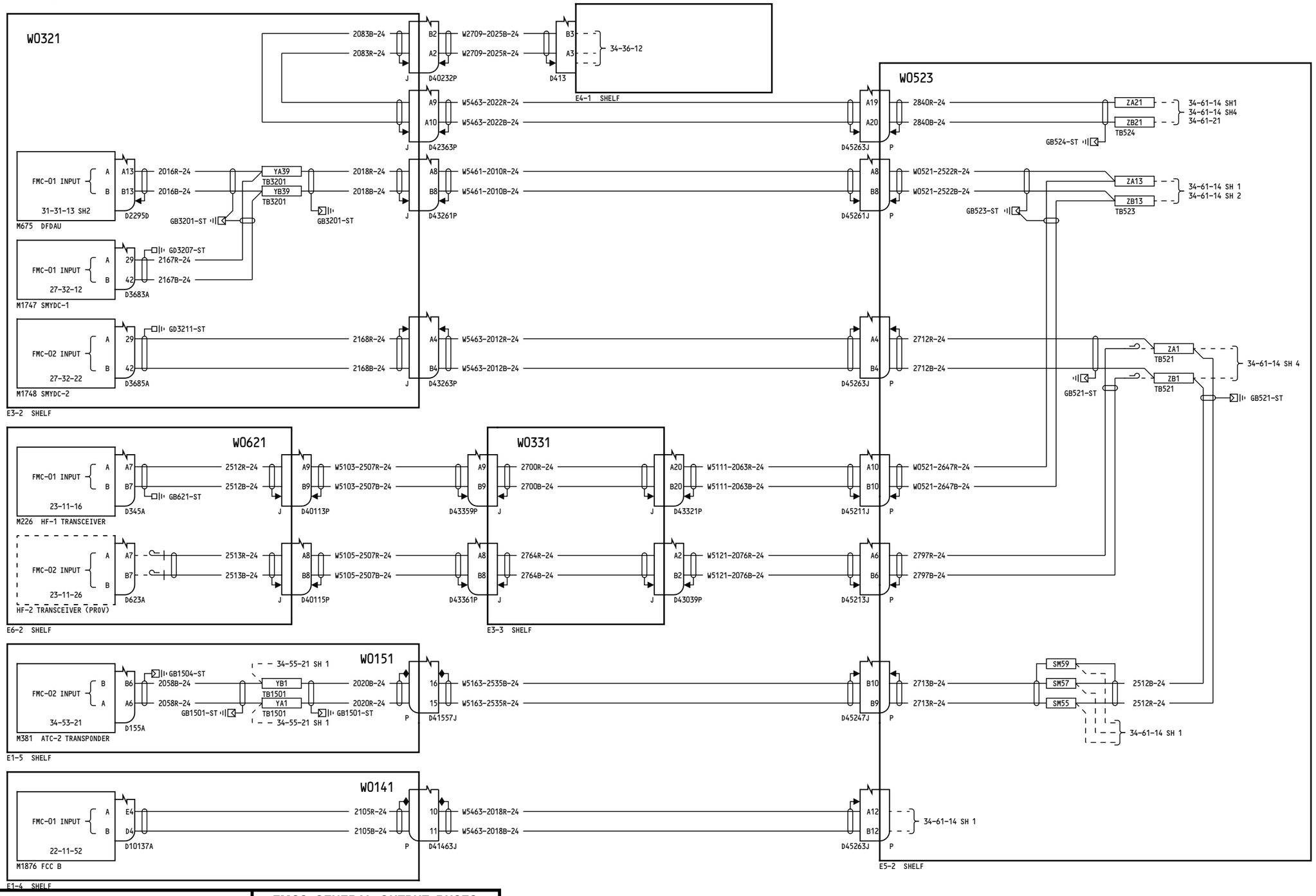

YT111-YT120

FMCS GENERAL OUTPUT BUSES
FMC-01 AND FMC-02

D280A351

34-61-14
Page 6
Sheet 3
Mar 14/2016

BOEING PROPRIETARY - Copyright © - Unpublished Work - See title page for details.

-B
1

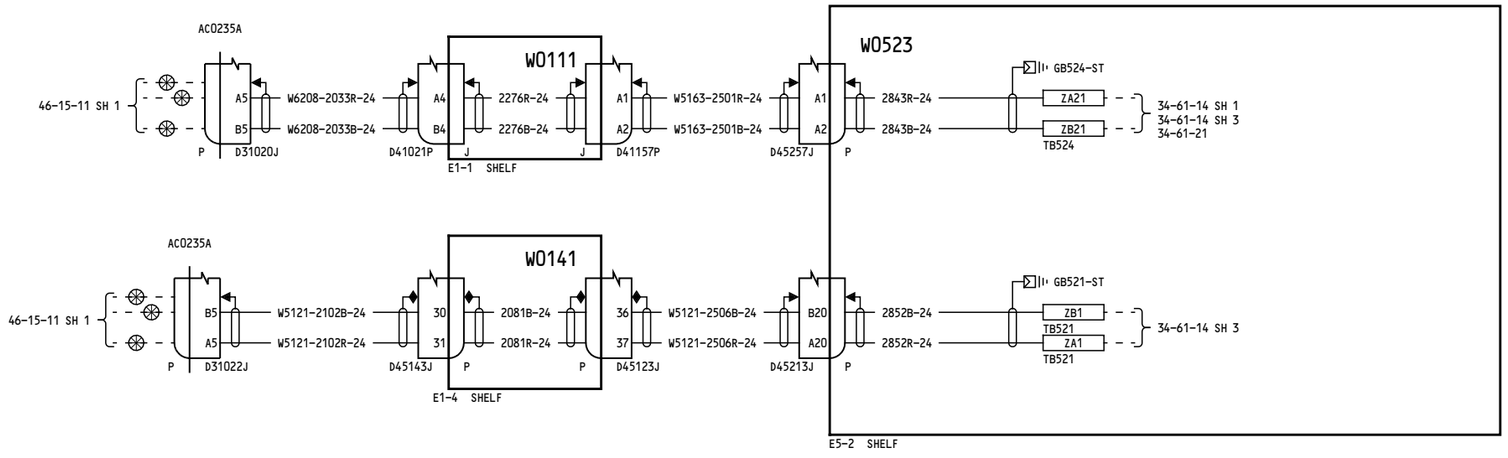

YT111-YT120	FMCS GENERAL OUTPUT BUSES FMC-01 AND FMC-02 D280A351

BOEING PROPRIETARY - Copyright © - Unpublished Work - See title page for details.

34-61-14
Page 6
Sheet 4
Mar 14/2016

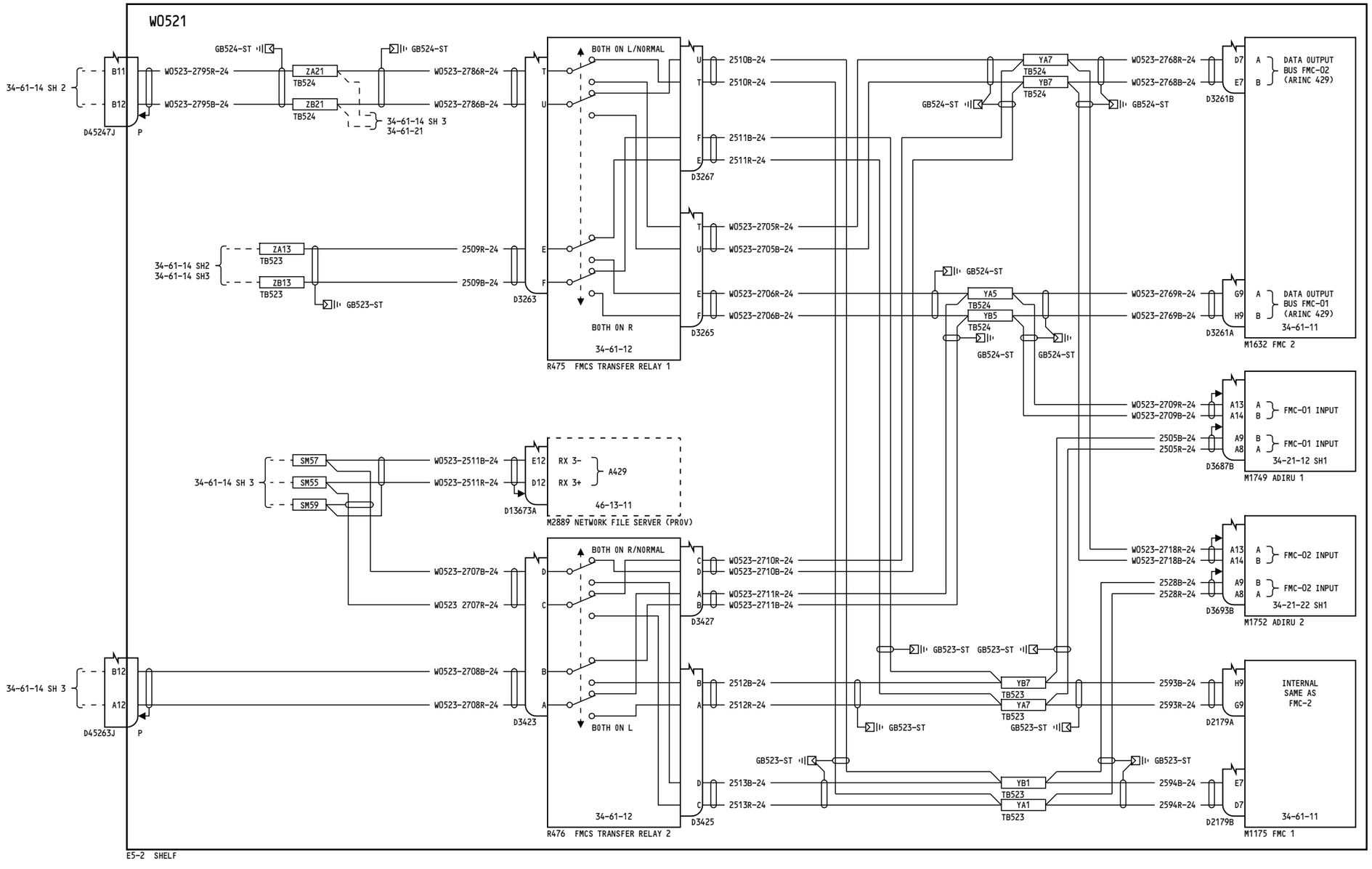

YT126-YT129	**FMCS GENERAL OUTPUT BUSES FMC-01 AND FMC-02**
	D280A351

BOEING PROPRIETARY - Copyright © - Unpublished Work - See title page for details.

34-61-14

Page 7
Sheet 1
May 15/2015

43

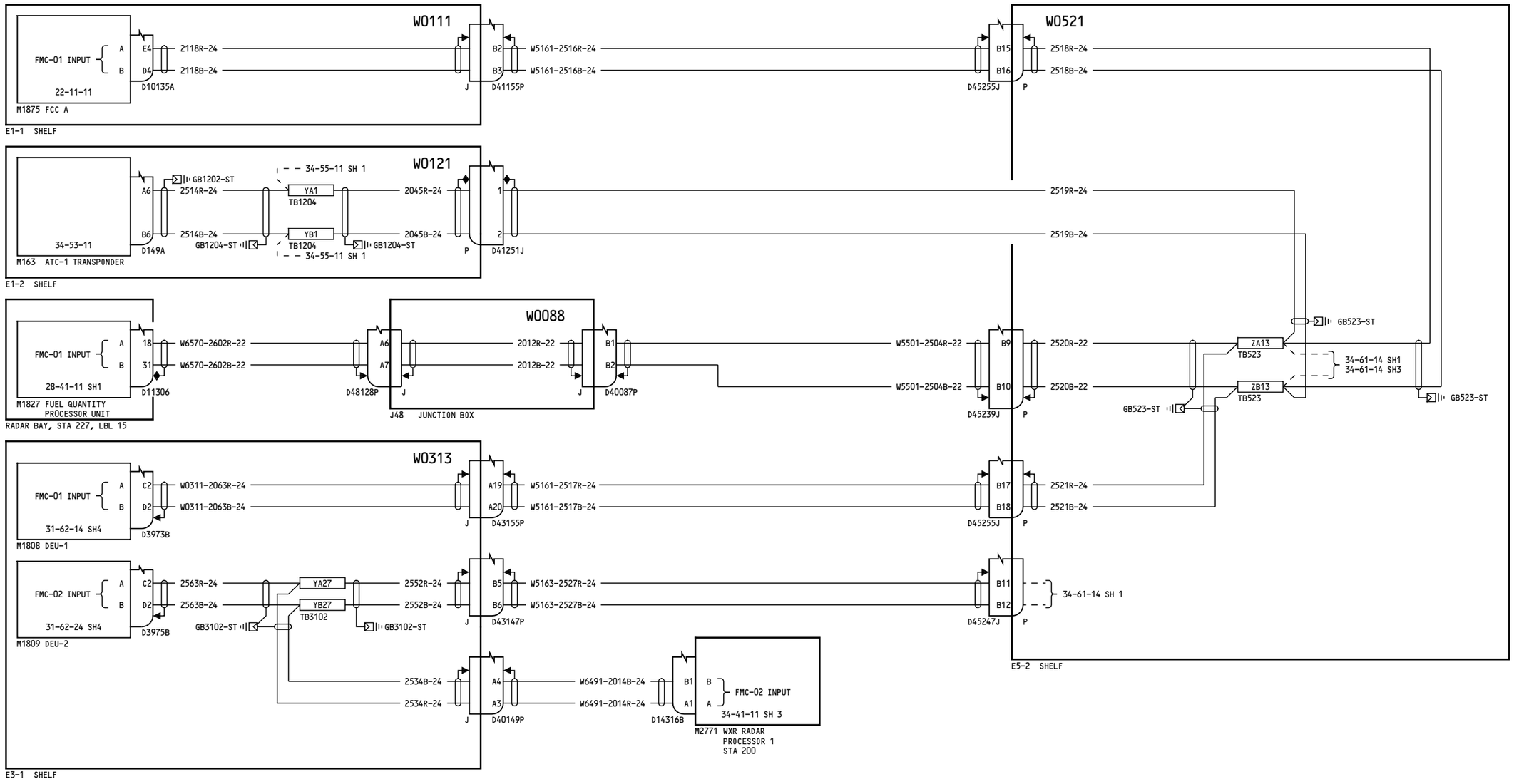

YT126-YT129

FMCS GENERAL OUTPUT BUSES FMC-01 AND FMC-02

D280A351

BOEING PROPRIETARY - Copyright © - Unpublished Work - See title page for details.

34-61-14

Page 7
Sheet 2
May 15/2015

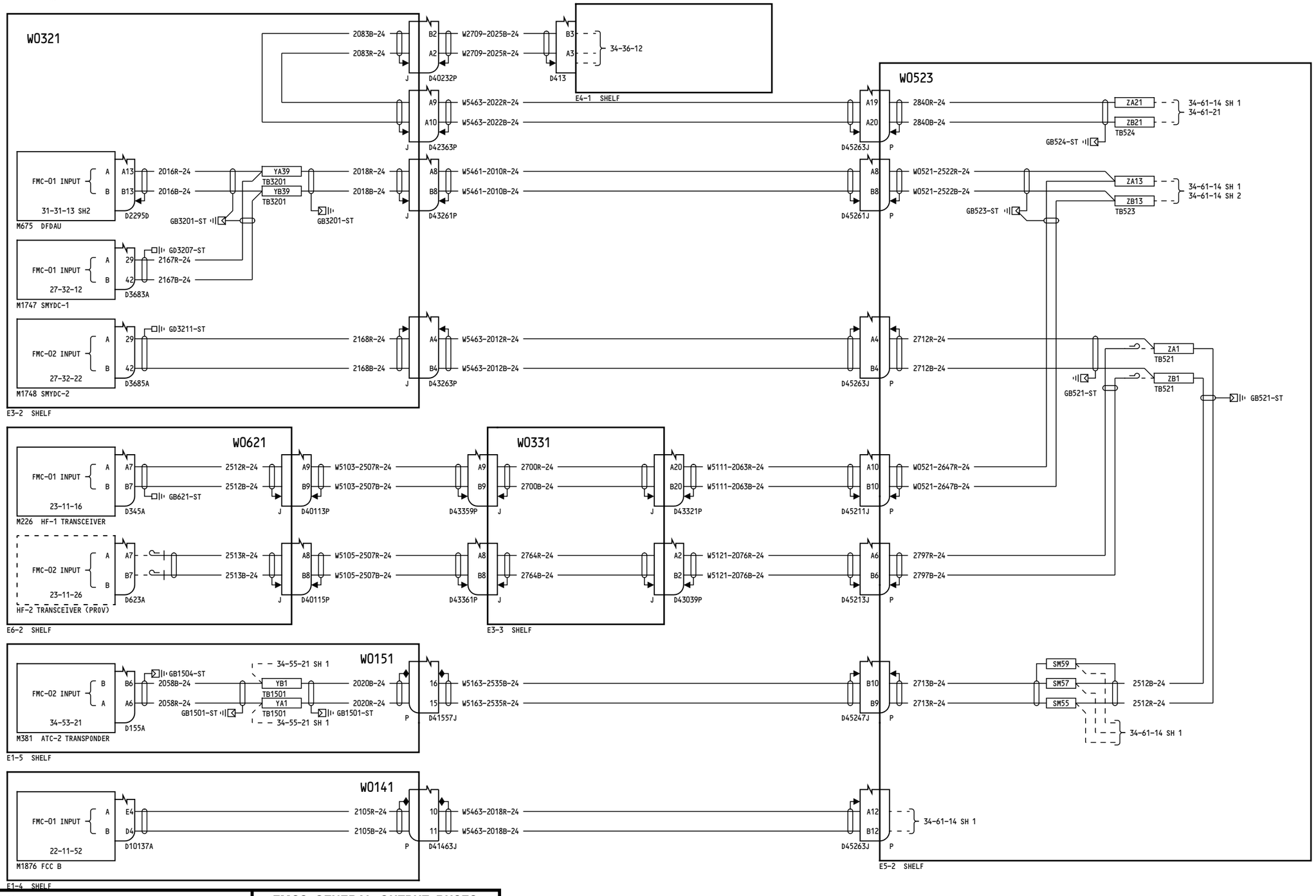

YT126-YT129

FMCS GENERAL OUTPUT BUSES
FMC-01 AND FMC-02

D280A351

34-61-14

Page 7
Sheet 3
May 15/2015

BOEING PROPRIETARY - Copyright © - Unpublished Work - See title page for details.

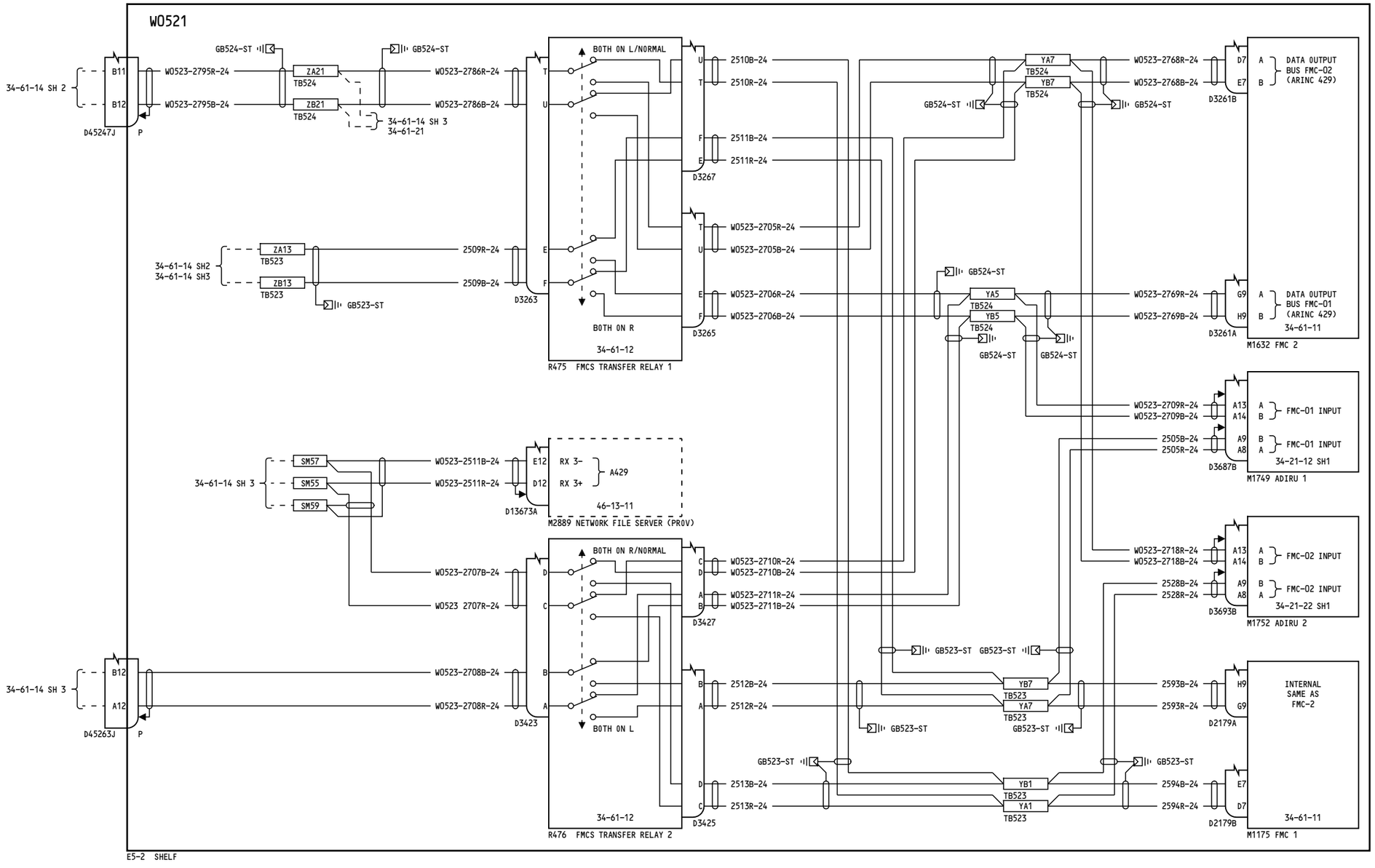

YT130-YT133

FMCS GENERAL OUTPUT BUSES FMC-01 AND FMC-02

D280A351

BOEING PROPRIETARY - Copyright © - Unpublished Work - See title page for details.

34-61-14

Page 8
Sheet 1
Jun 21/2016

77

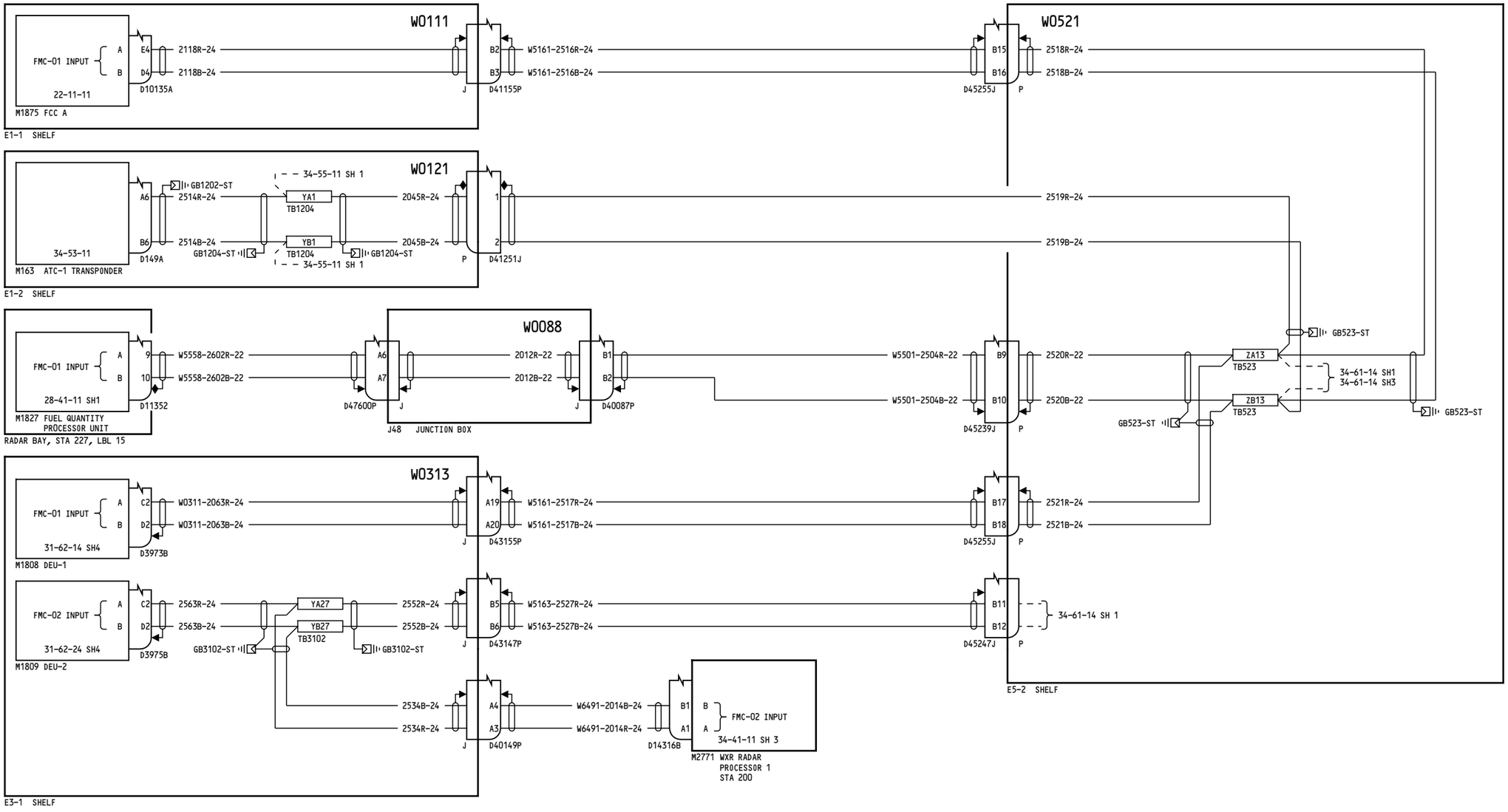

YT130-YT133

FMCS GENERAL OUTPUT BUSES FMC-01 AND FMC-02

D280A351

BOEING PROPRIETARY - Copyright © - Unpublished Work - See title page for details.

34-61-14

Page 8
Sheet 2
Jun 21/2016

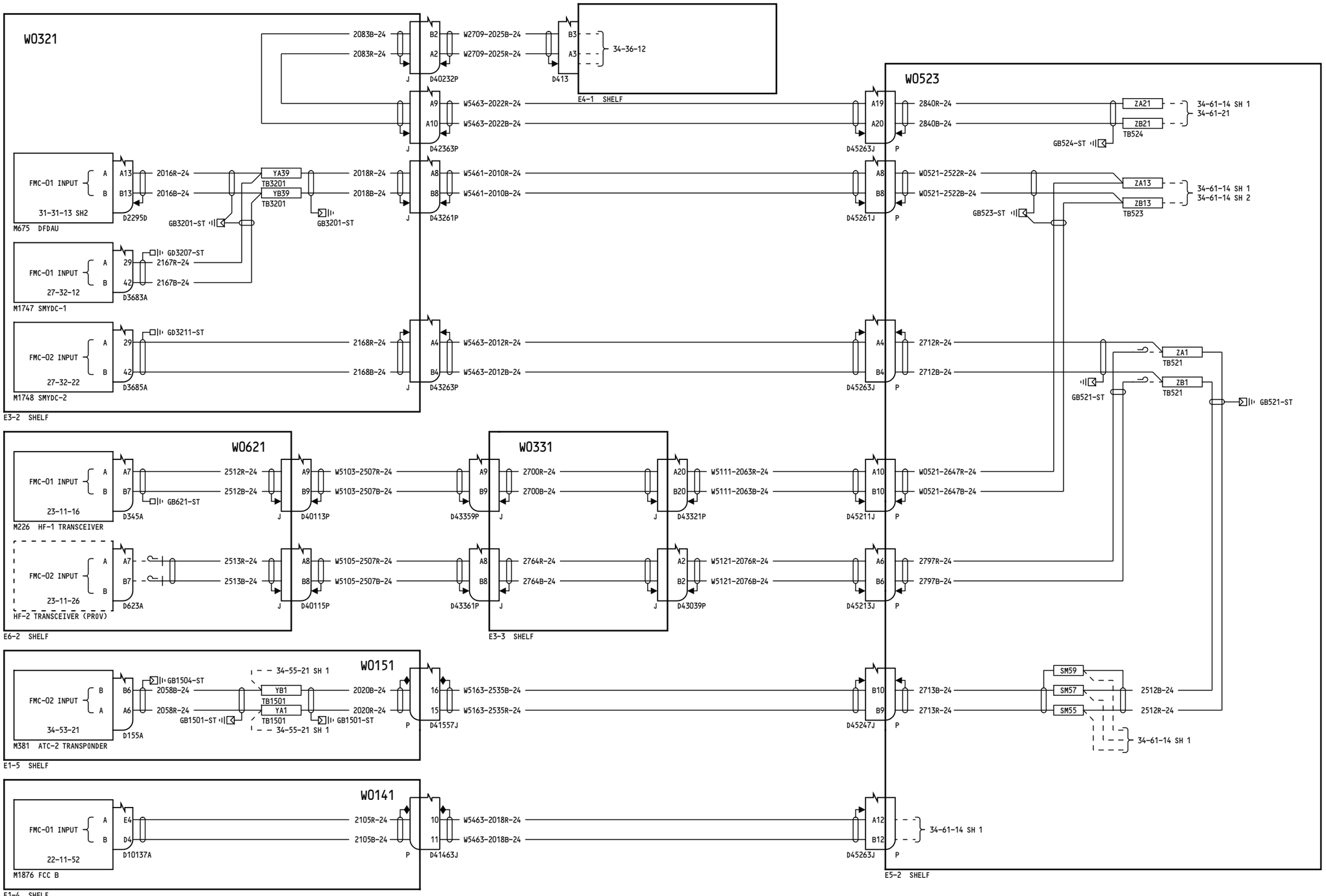

YT130-YT133

FMCS GENERAL OUTPUT BUSES FMC-01 AND FMC-02

D280A351

34-61-14

Page 8
Sheet 3
Jun 21/2016

BOEING PROPRIETARY - Copyright © - Unpublished Work - See title page for details.

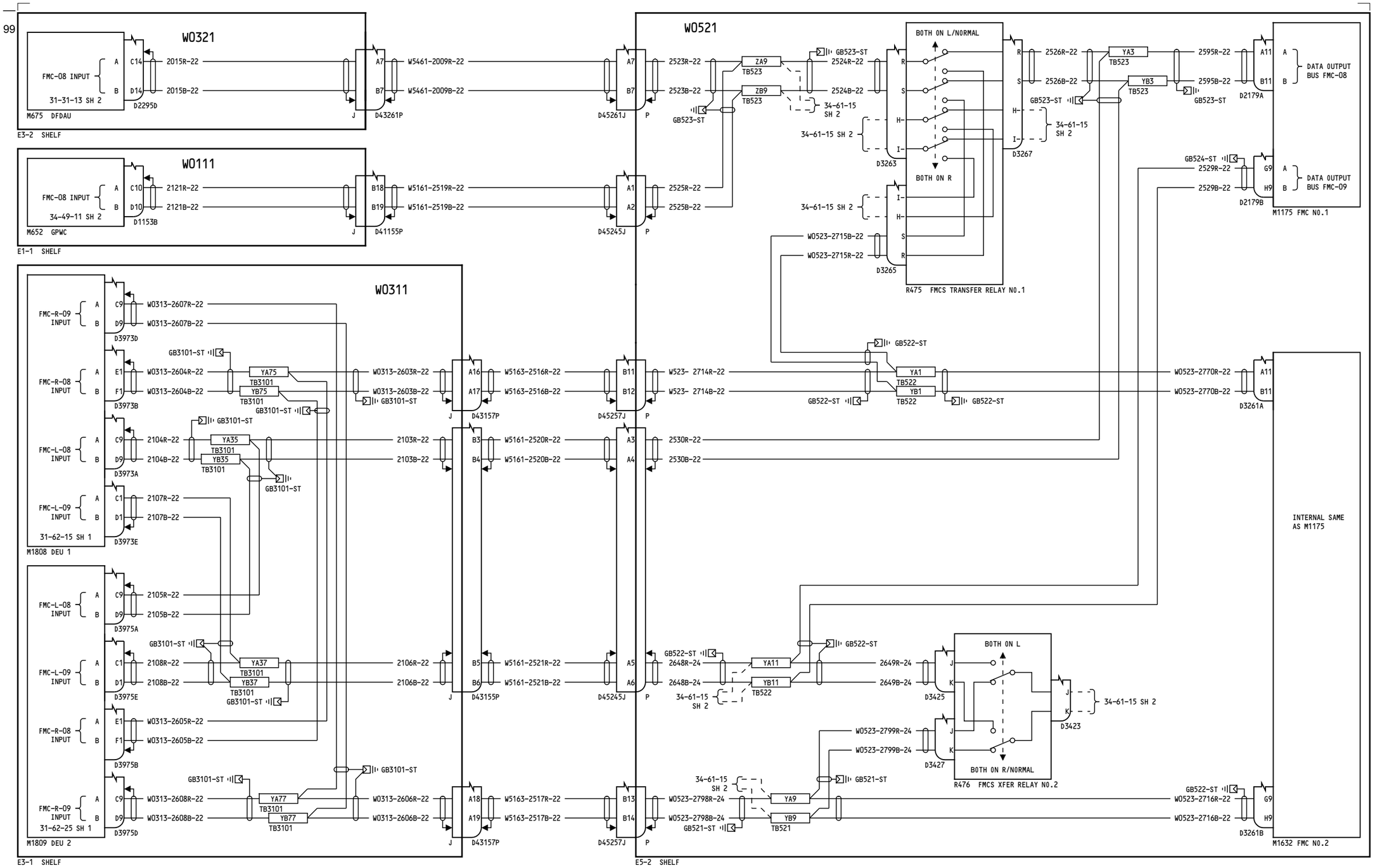

YT101-YT103

FMCS OUTPUT BUSSES FMC-08 AND FMC-09

D280A351

34-61-15

Page 1
Sheet 1
Aug 15/2013

BOEING PROPRIETARY - Copyright © - Unpublished Work - See title page for details.

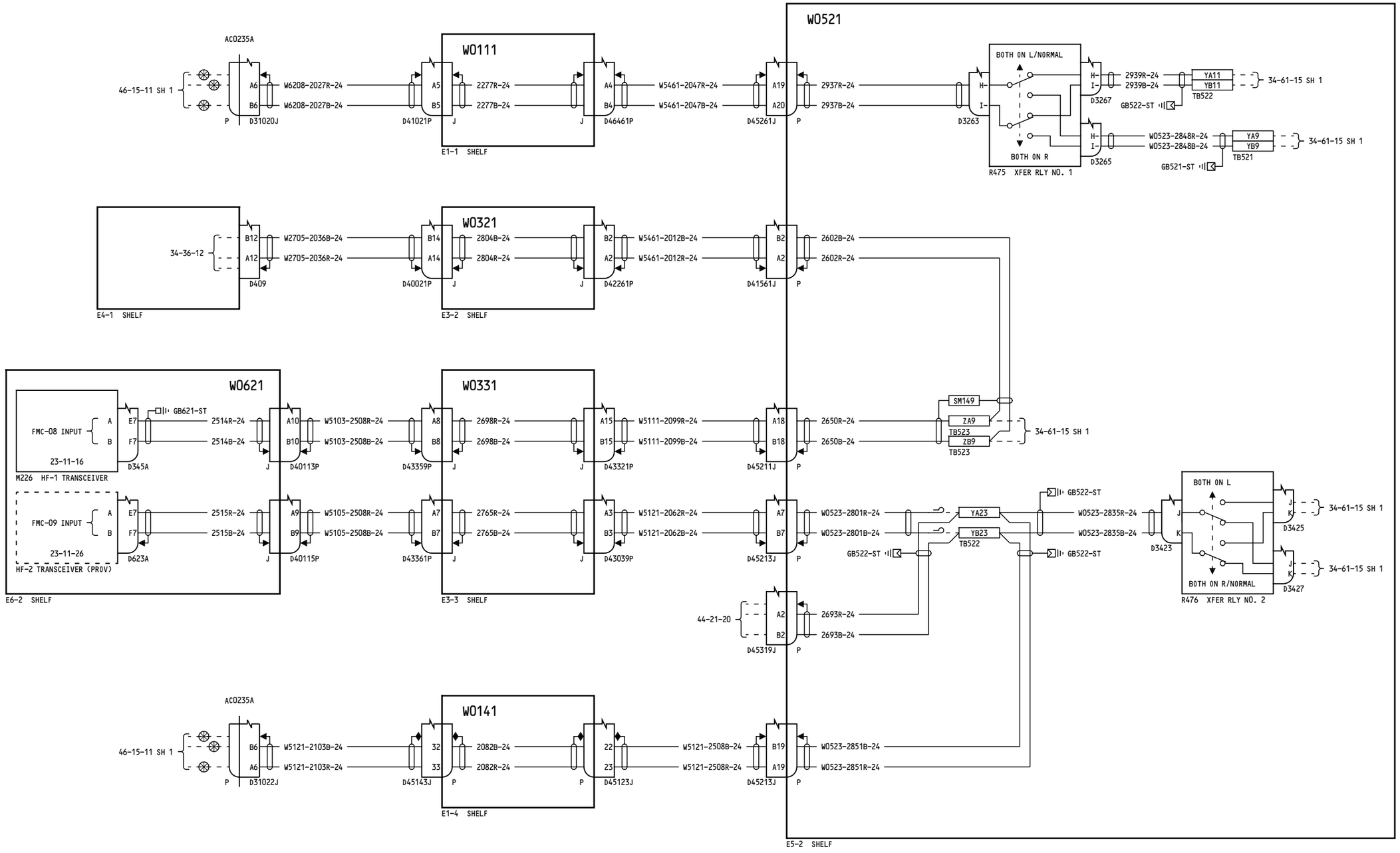

YT101-YT103

FMCS OUTPUT BUSSES
FMC-08 AND FMC-09

D280A351

BOEING PROPRIETARY - Copyright © - Unpublished Work - See title page for details.

34-61-15

Page 1
Sheet 2
Aug 15/2013

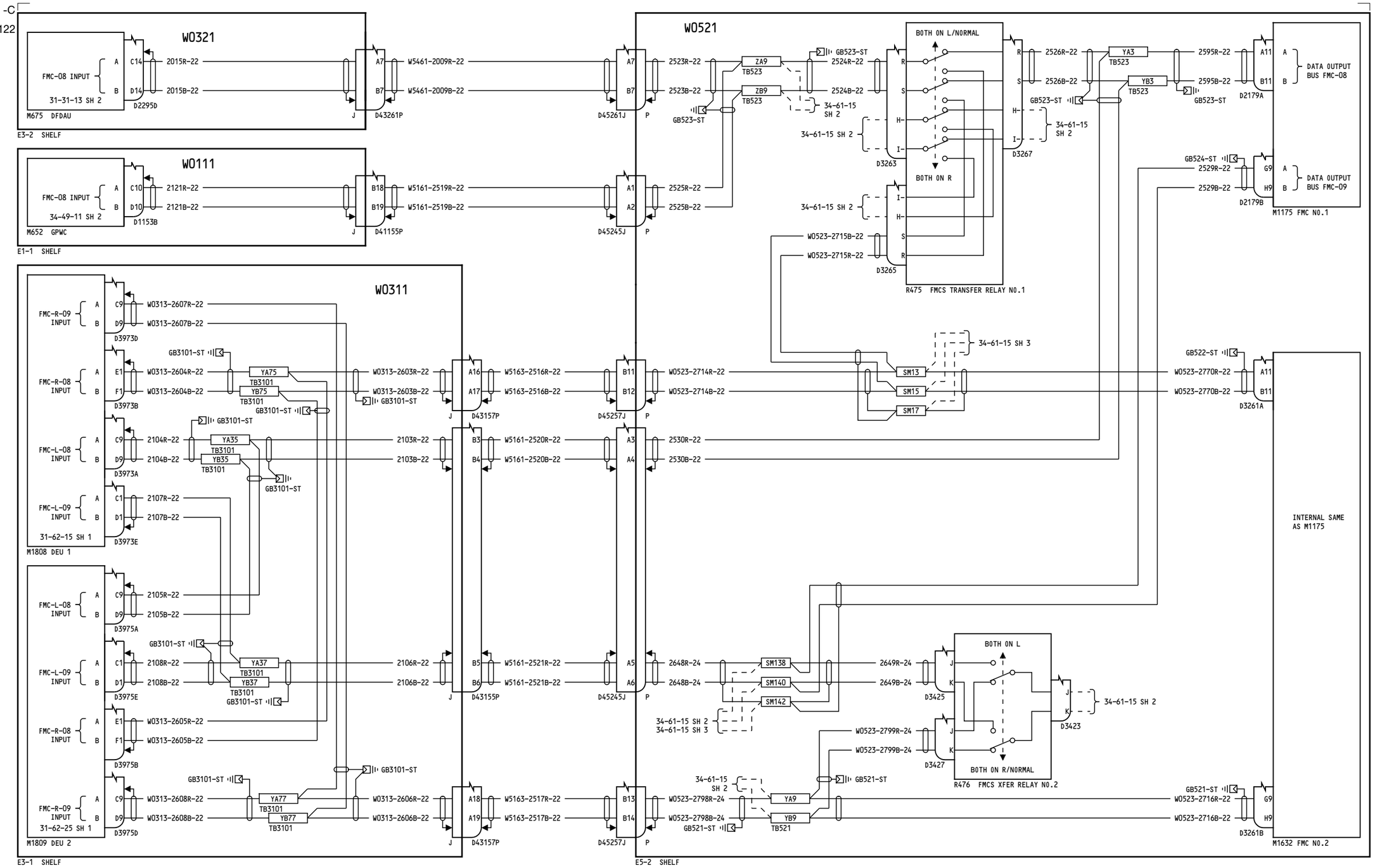

YT104

FMCS OUTPUT BUSSES FMC-08 AND FMC-09

D280A351

34-61-15

Page 2
Sheet 1
Feb 14/2014

BOEING PROPRIETARY - Copyright © - Unpublished Work - See title page for details.

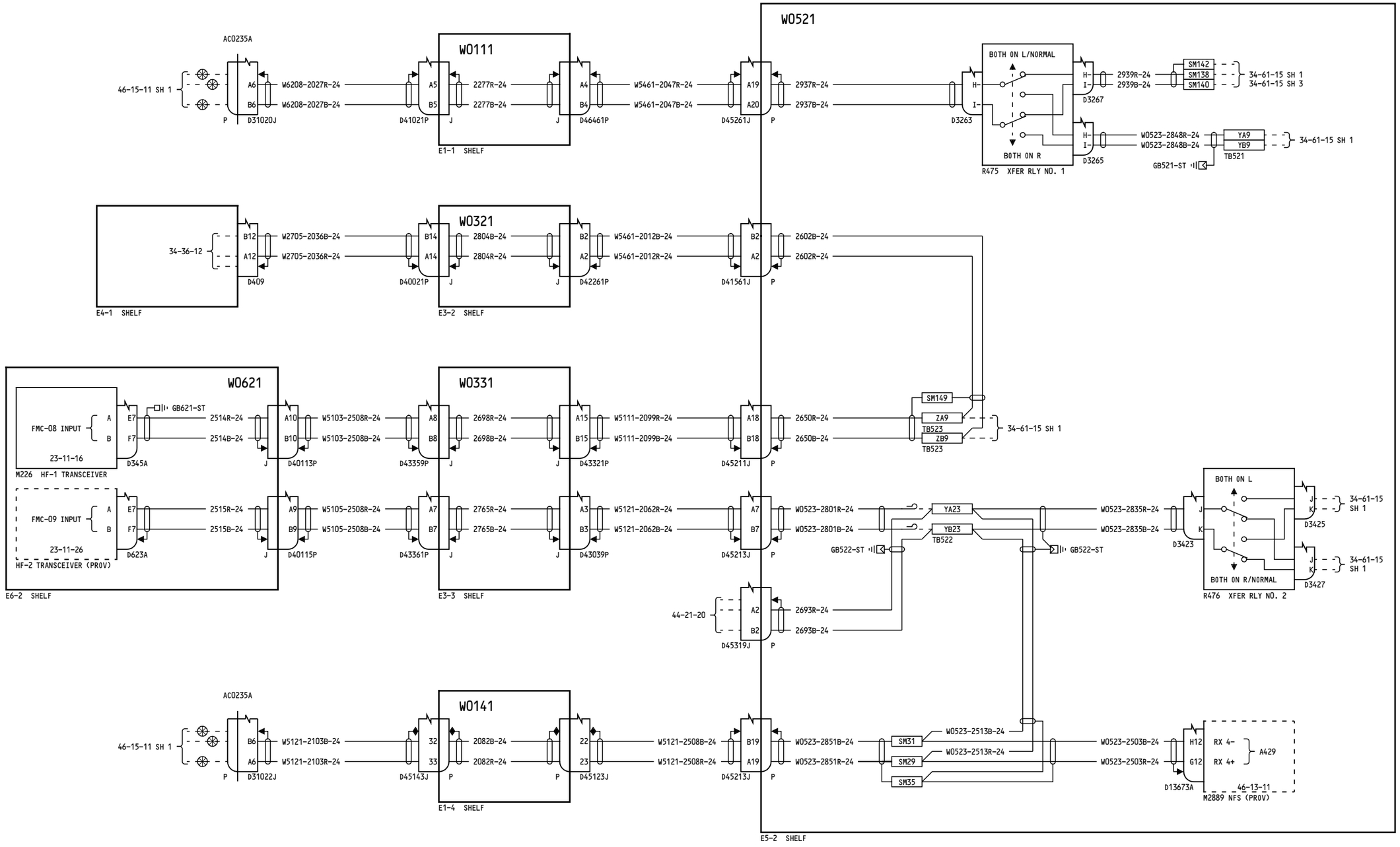

YT104

FMCS OUTPUT BUSSES
FMC-08 AND FMC-09

D280A351

BOEING PROPRIETARY - Copyright © - Unpublished Work - See title page for details.

34-61-15
Page 2
Sheet 2
Feb 14/2014

-A
2

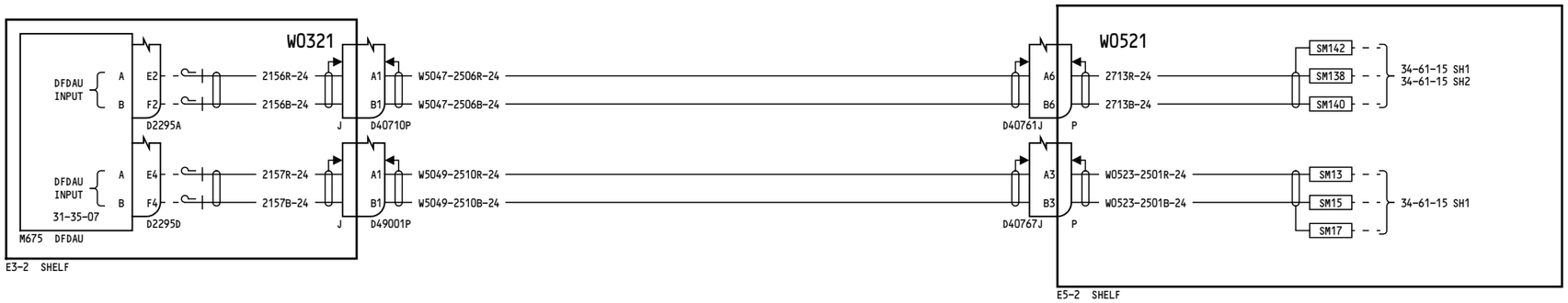

YT104

FMCS OUTPUT BUSSES
FMC-08 AND FMC-09

D280A351

BOEING PROPRIETARY - Copyright © - Unpublished Work - See title page for details.

34-61-15

Page 2
Sheet 3
Feb 14/2014

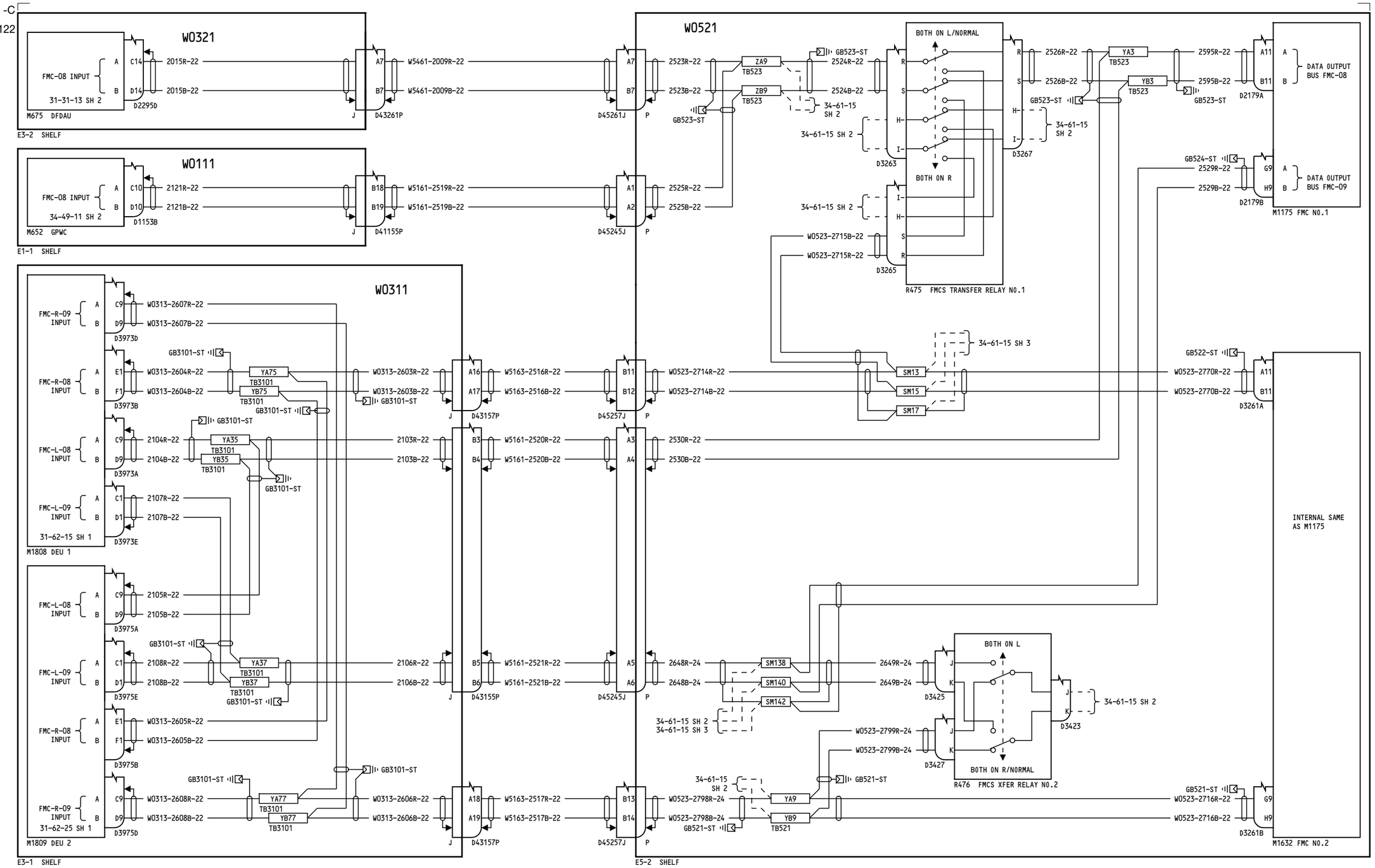

YT105

FMCS OUTPUT BUSSES
FMC-08 AND FMC-09

D280A351

BOEING PROPRIETARY - Copyright © - Unpublished Work - See title page for details.

34-61-15

Page 3
Sheet 1
Apr 17/2014

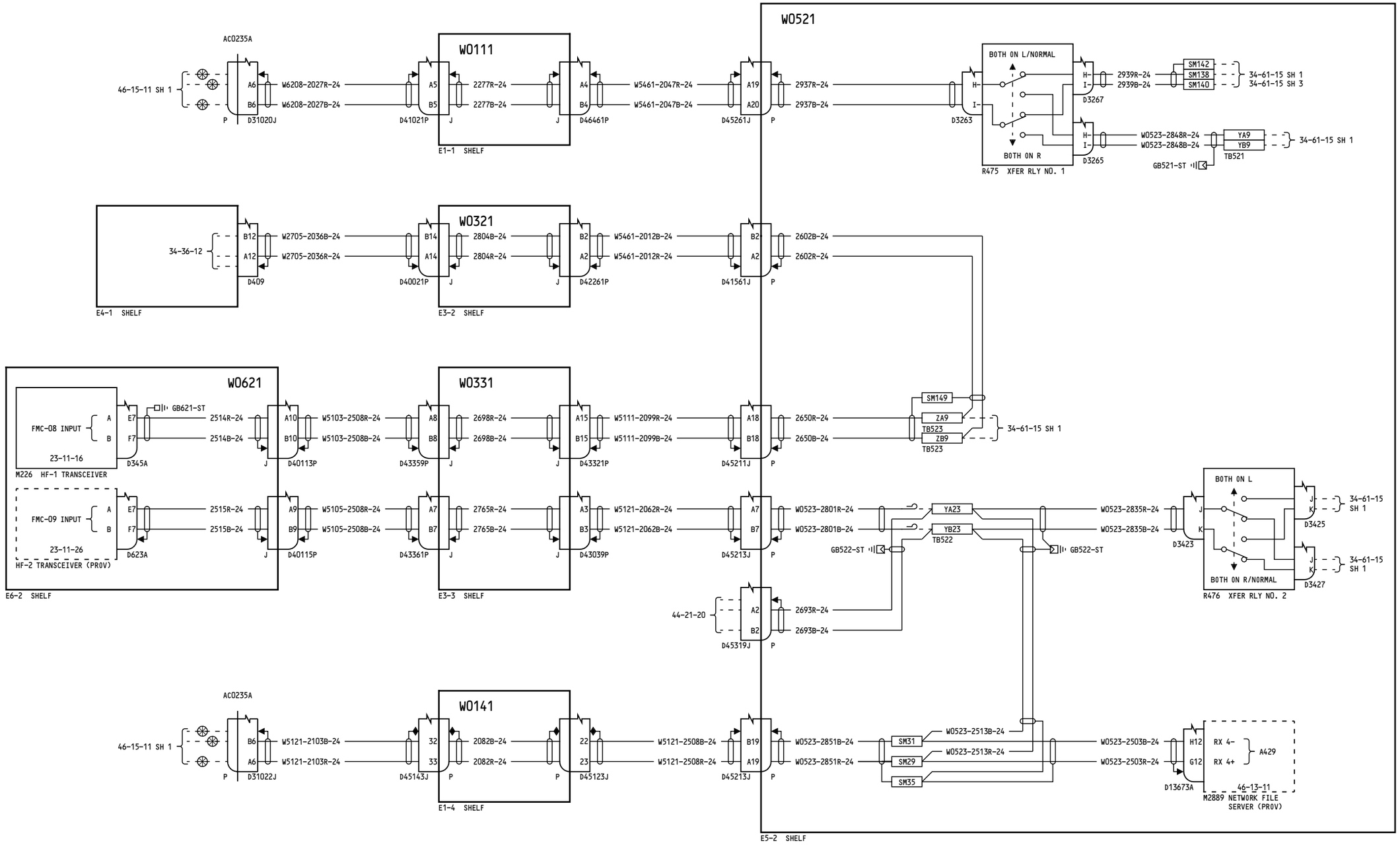

YT105

FMCS OUTPUT BUSSES
FMC-08 AND FMC-09

D280A351

BOEING PROPRIETARY - Copyright © - Unpublished Work - See title page for details.

34-61-15

Page 3
Sheet 2
Apr 17/2014

-A
2

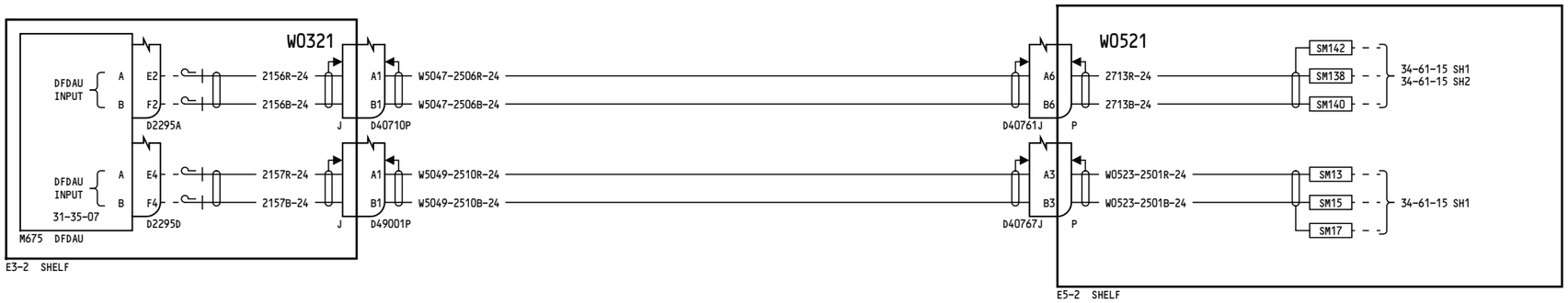

YT105

FMCS OUTPUT BUSSES
FMC-08 AND FMC-09

D280A351

BOEING PROPRIETARY - Copyright © - Unpublished Work - See title page for details.

34-61-15

Page 3
Sheet 3
Apr 17/2014

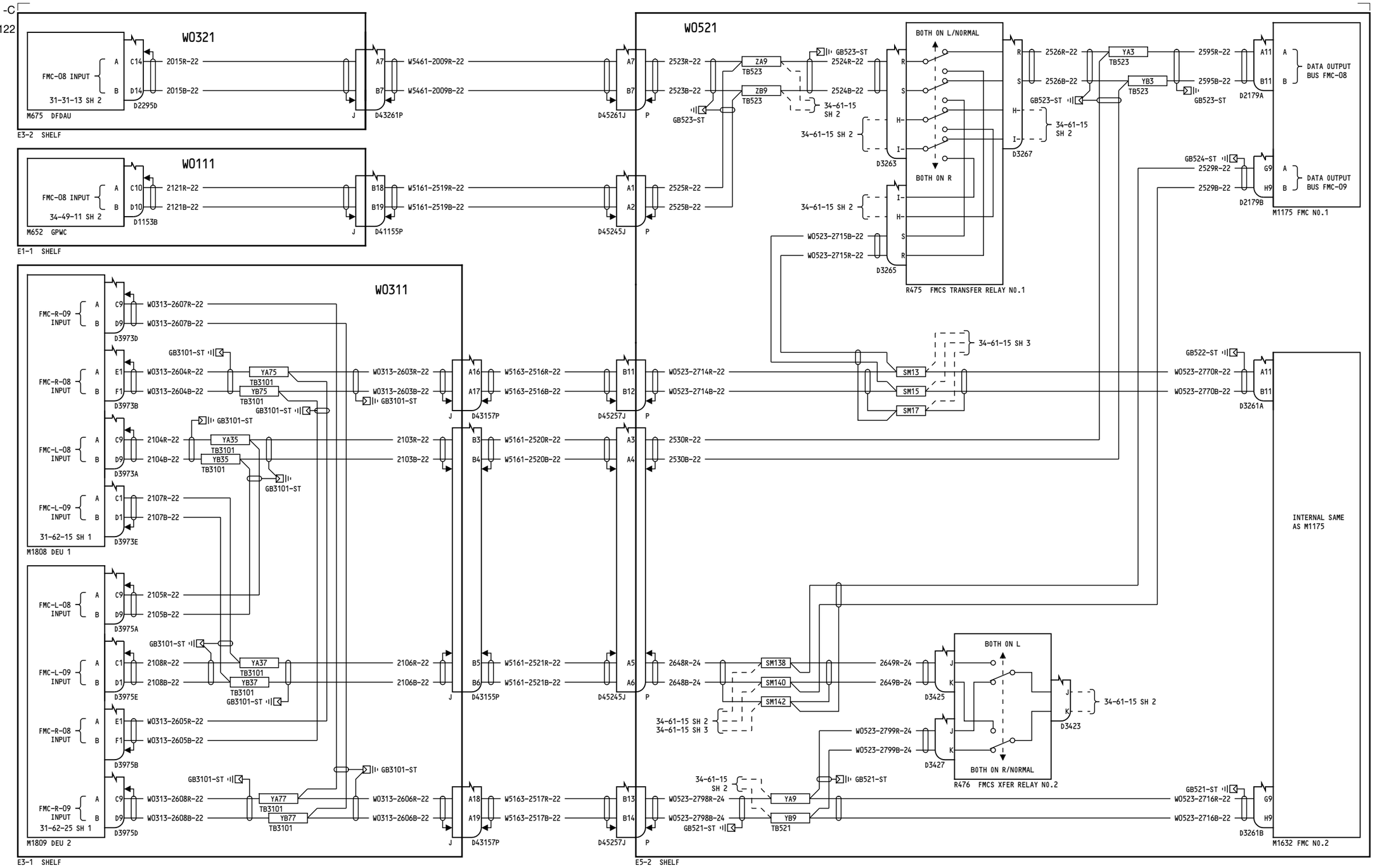

YT106

FMCS OUTPUT BUSSES
FMC-08 AND FMC-09

D280A351

34-61-15

Page 4
Sheet 1
Jan 12/2015

BOEING PROPRIETARY - Copyright © - Unpublished Work - See title page for details.

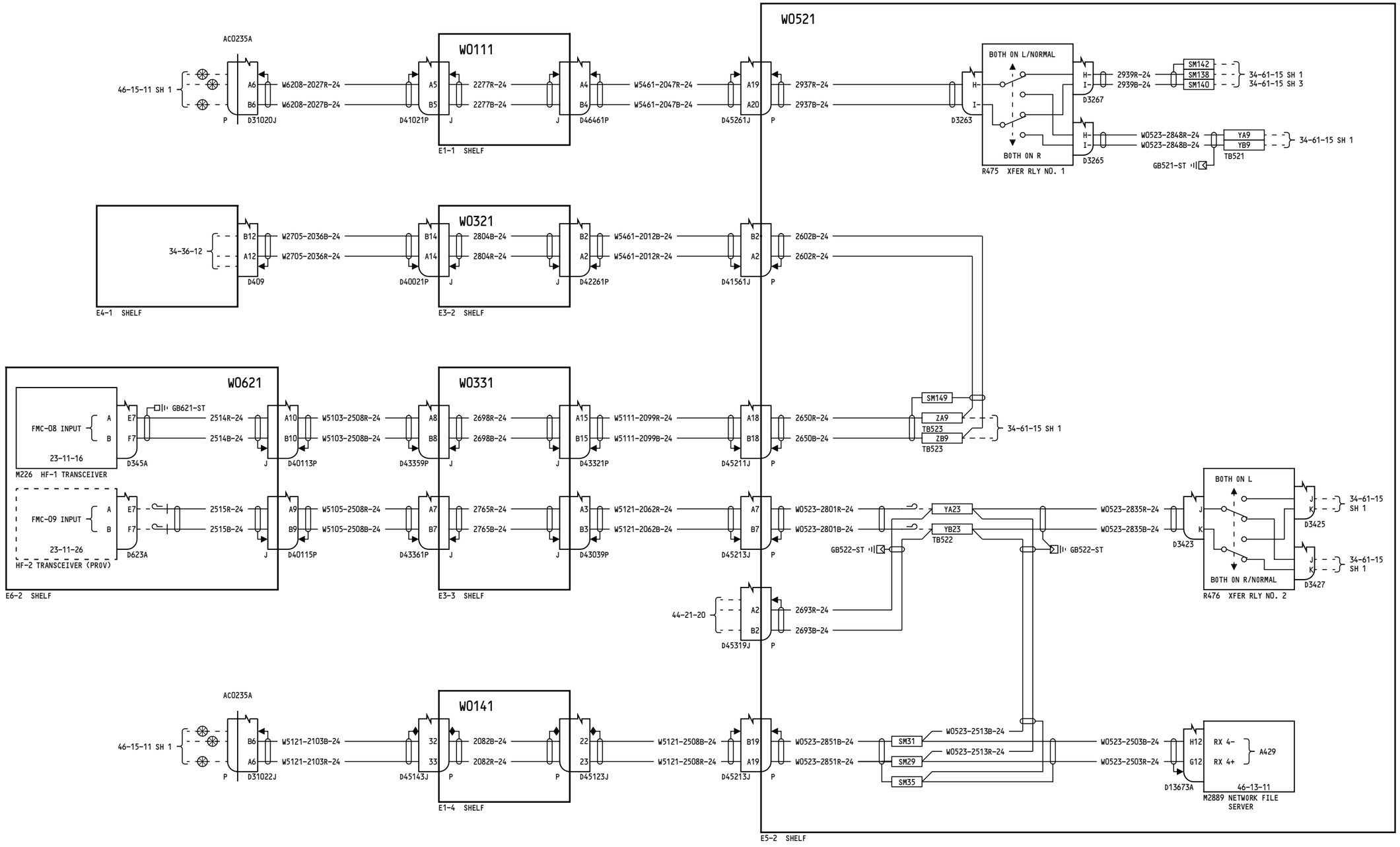

YT106	FMCS OUTPUT BUSSES FMC-08 AND FMC-09 D280A351

BOEING PROPRIETARY - Copyright © - Unpublished Work - See title page for details.

34-61-15
Page 4
Sheet 2
Jan 12/2015

-A
2

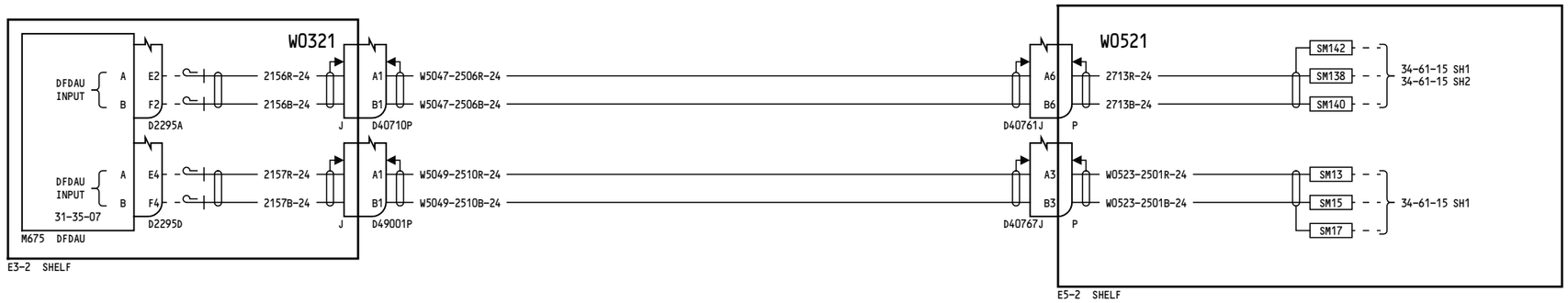

YT106

FMCS OUTPUT BUSSES
FMC-08 AND FMC-09

D280A351

BOEING PROPRIETARY - Copyright © - Unpublished Work - See title page for details.

34-61-15

Page 4
Sheet 3
Jan 12/2015

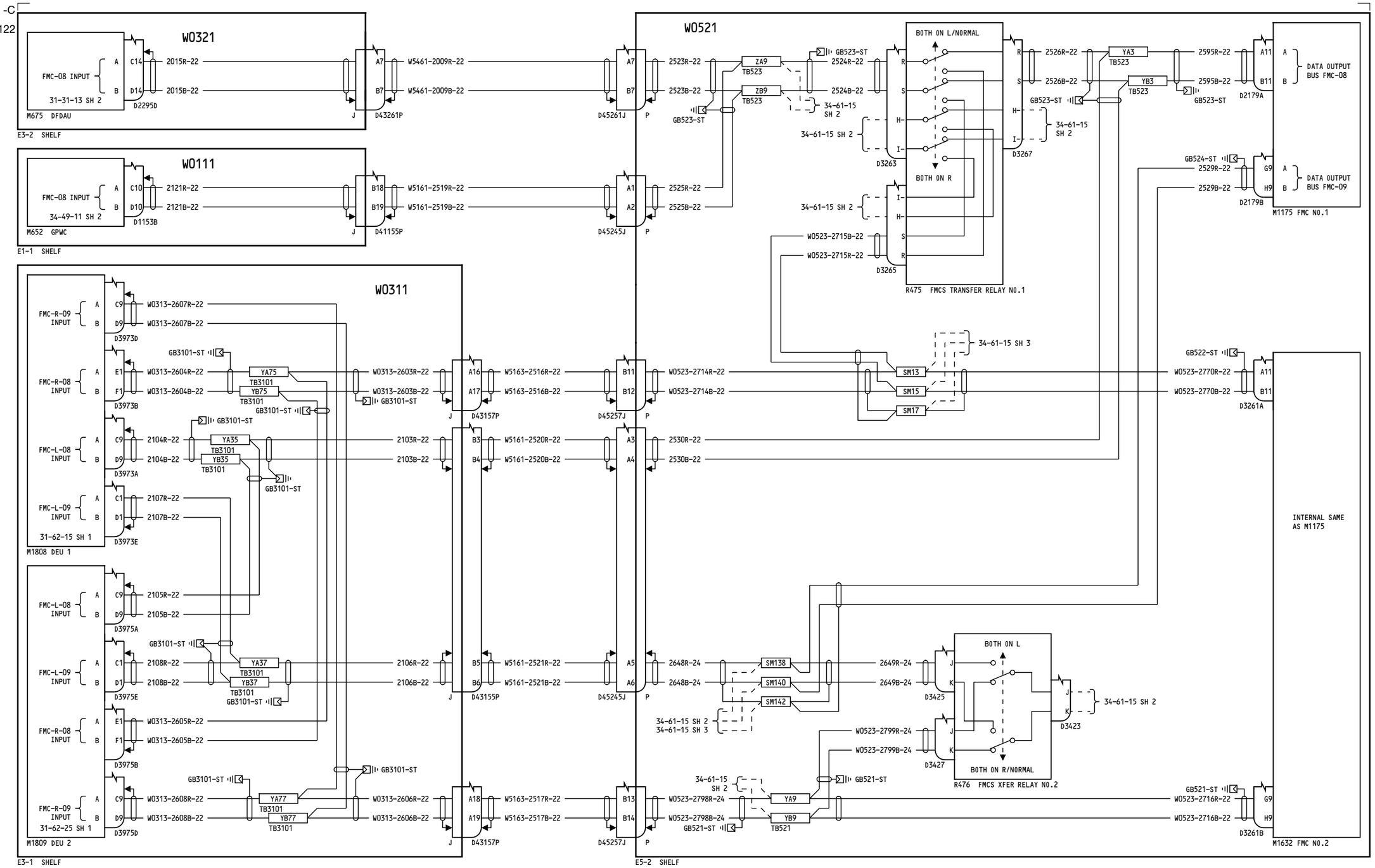

YT107-YT110

FMCS OUTPUT BUSSES FMC-08 AND FMC-09

D280A351

34-61-15

Page 5
Sheet 1
Jan 12/2015

BOEING PROPRIETARY - Copyright © - Unpublished Work - See title page for details.

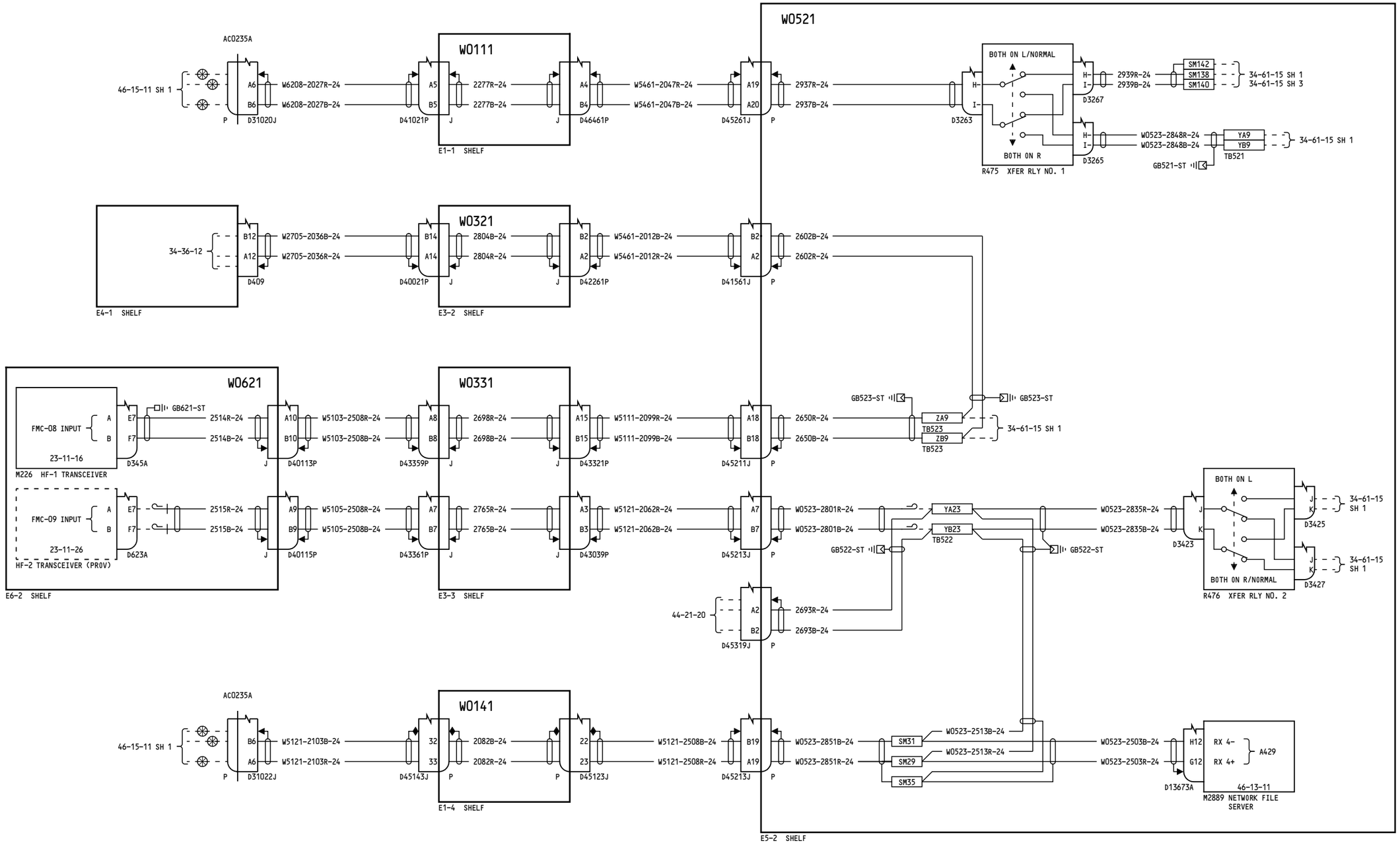

YT107-YT110	**FMCS OUTPUT BUSSES FMC-08 AND FMC-09**
	D280A351

BOEING PROPRIETARY - Copyright © - Unpublished Work - See title page for details.

34-61-15

Page 5
Sheet 2
Jan 12/2015

-A
2

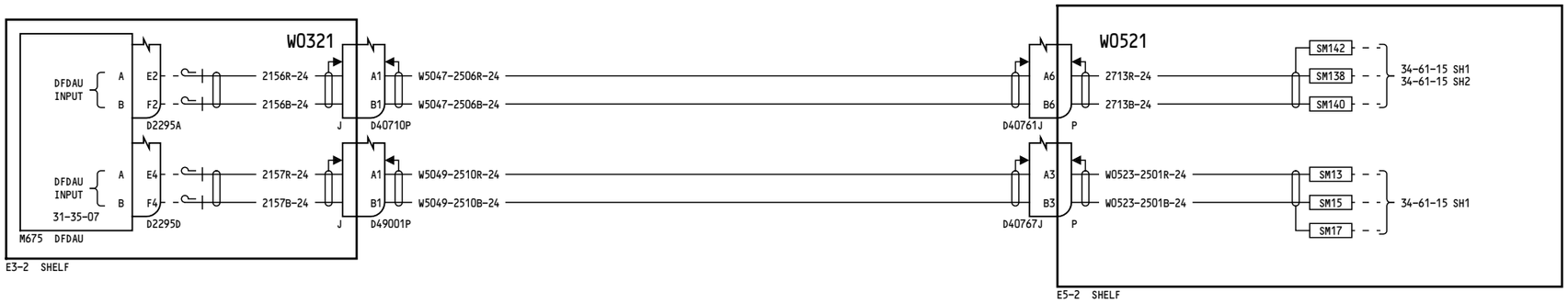

YT107-YT110	**FMCS OUTPUT BUSSES FMC-08 AND FMC-09**
	D280A351

BOEING PROPRIETARY - Copyright © - Unpublished Work - See title page for details.

34-61-15

Page 5
Sheet 3
Jan 12/2015

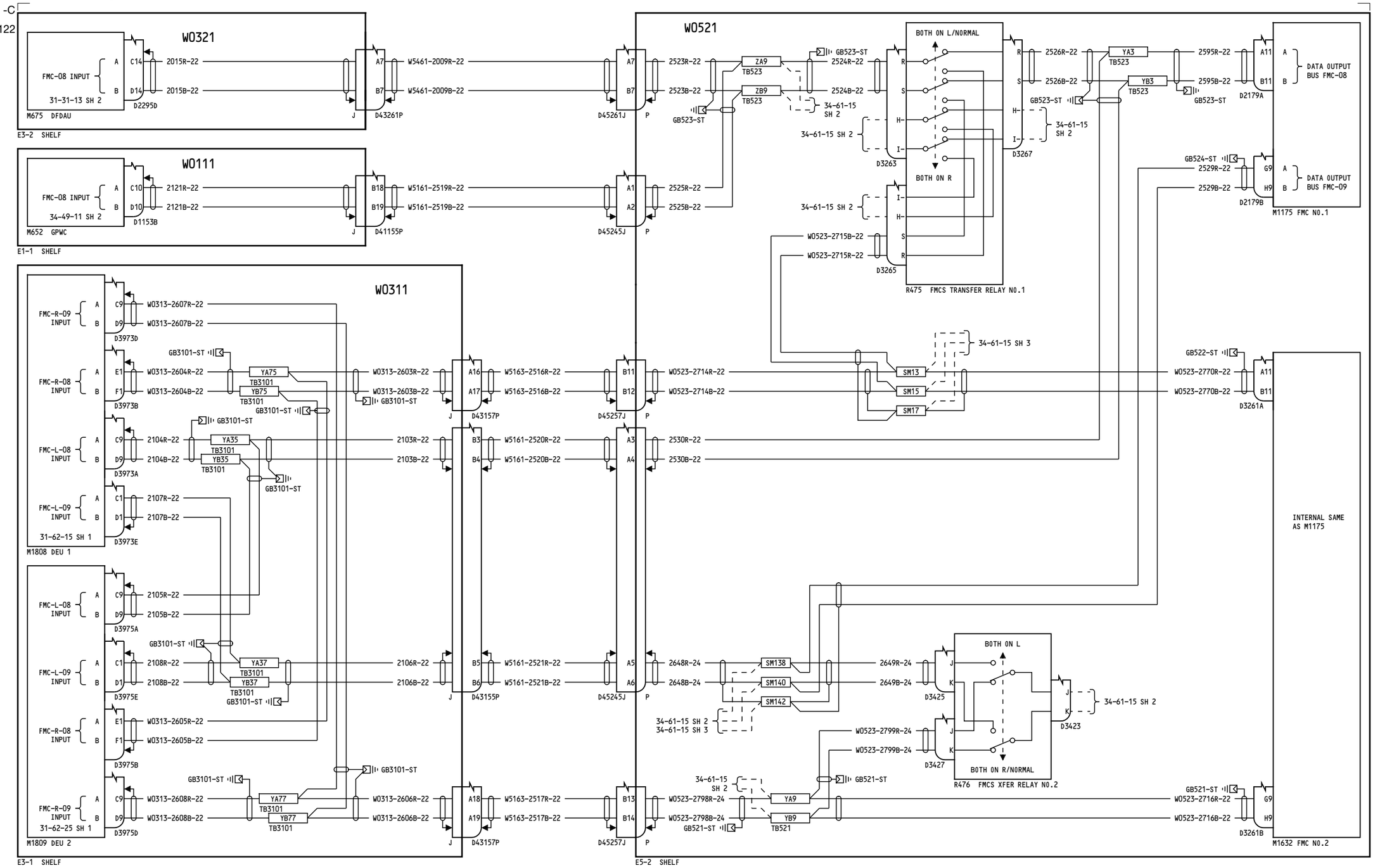

YT111-YT120

FMCS OUTPUT BUSSES
FMC-08 AND FMC-09

D280A351

34-61-15

Page 6
Sheet 1
Mar 14/2016

BOEING PROPRIETARY - Copyright © - Unpublished Work - See title page for details.

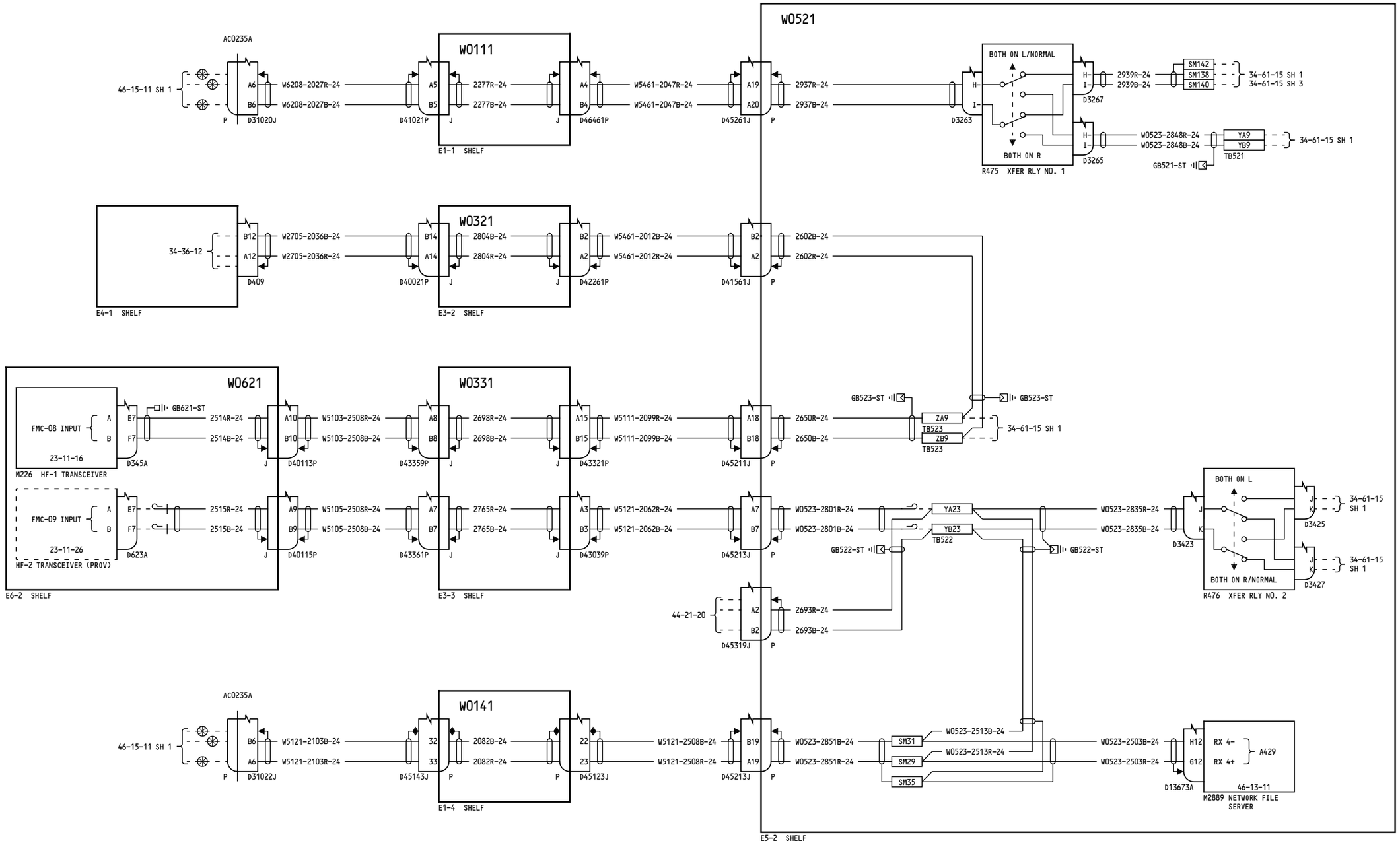

YT111-YT120

FMCS OUTPUT BUSSES
FMC-08 AND FMC-09

D280A351

BOEING PROPRIETARY - Copyright © - Unpublished Work - See title page for details.

34-61-15
Page 6
Sheet 2
Mar 14/2016

-A
2

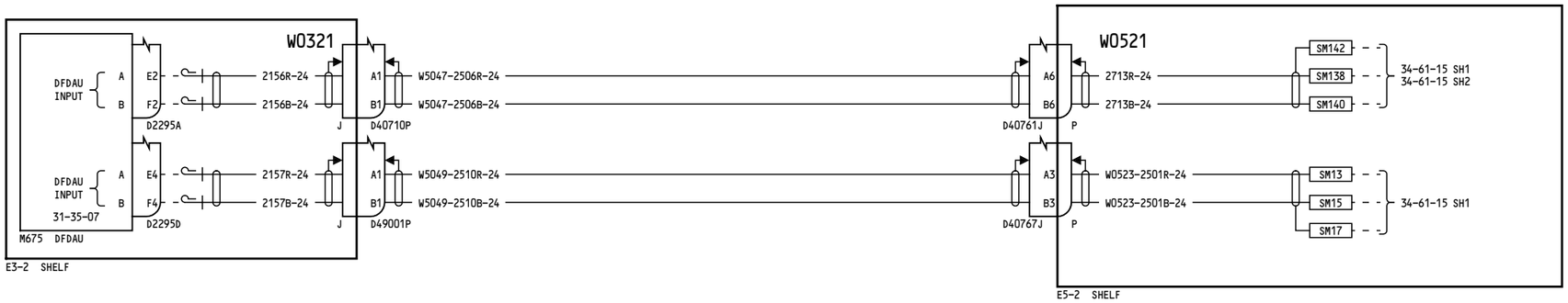

YT111-YT120	FMCS OUTPUT BUSSES FMC-08 AND FMC-09 D280A351

BOEING PROPRIETARY - Copyright © - Unpublished Work - See title page for details.

34-61-15
Page 6
Sheet 3
Mar 14/2016

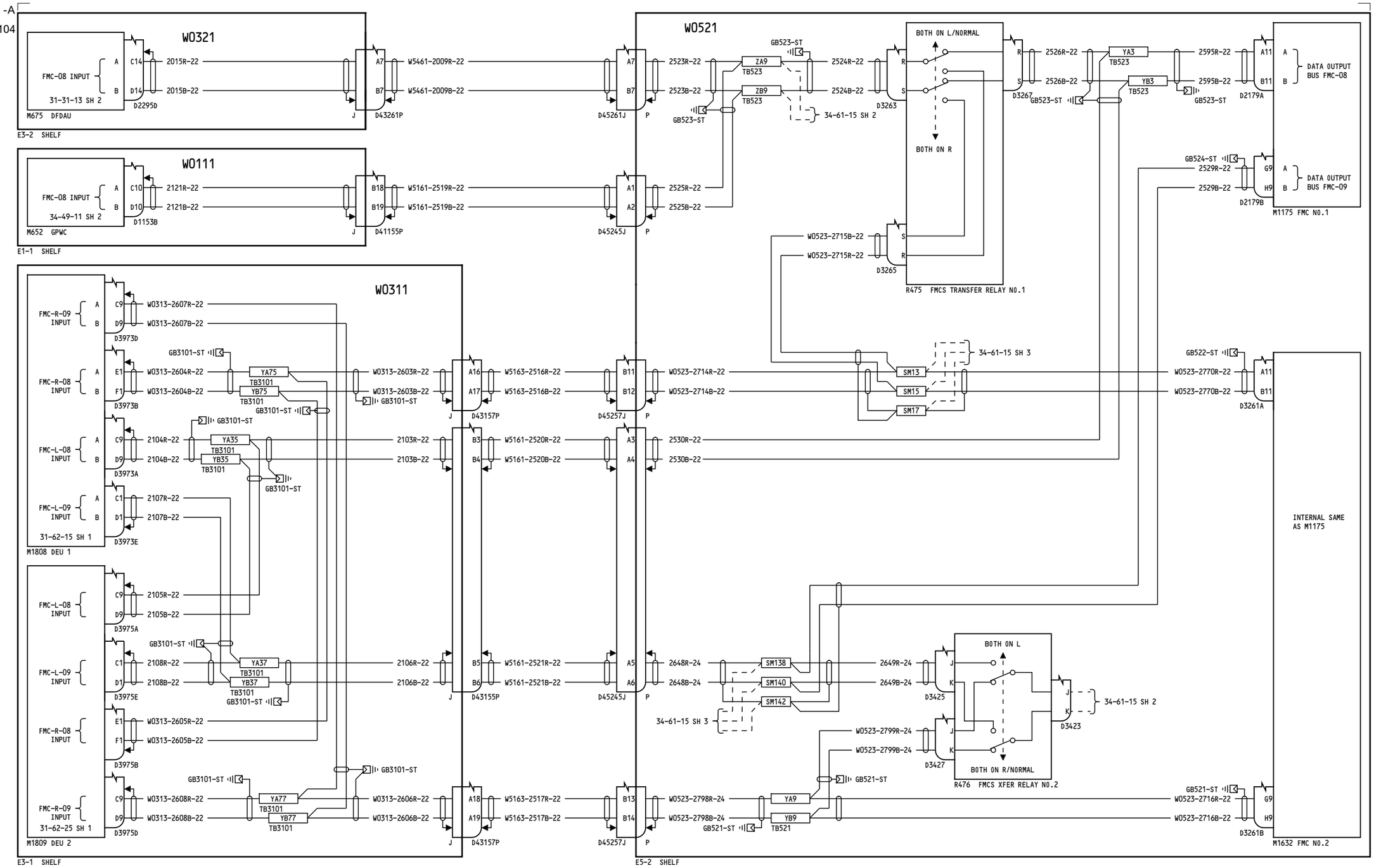

YT126-YT133

FMCS OUTPUT BUSSES FMC-08 AND FMC-09

D280A351

34-61-15

Page 7
Sheet 1
Jun 21/2016

BOEING PROPRIETARY - Copyright © - Unpublished Work - See title page for details.

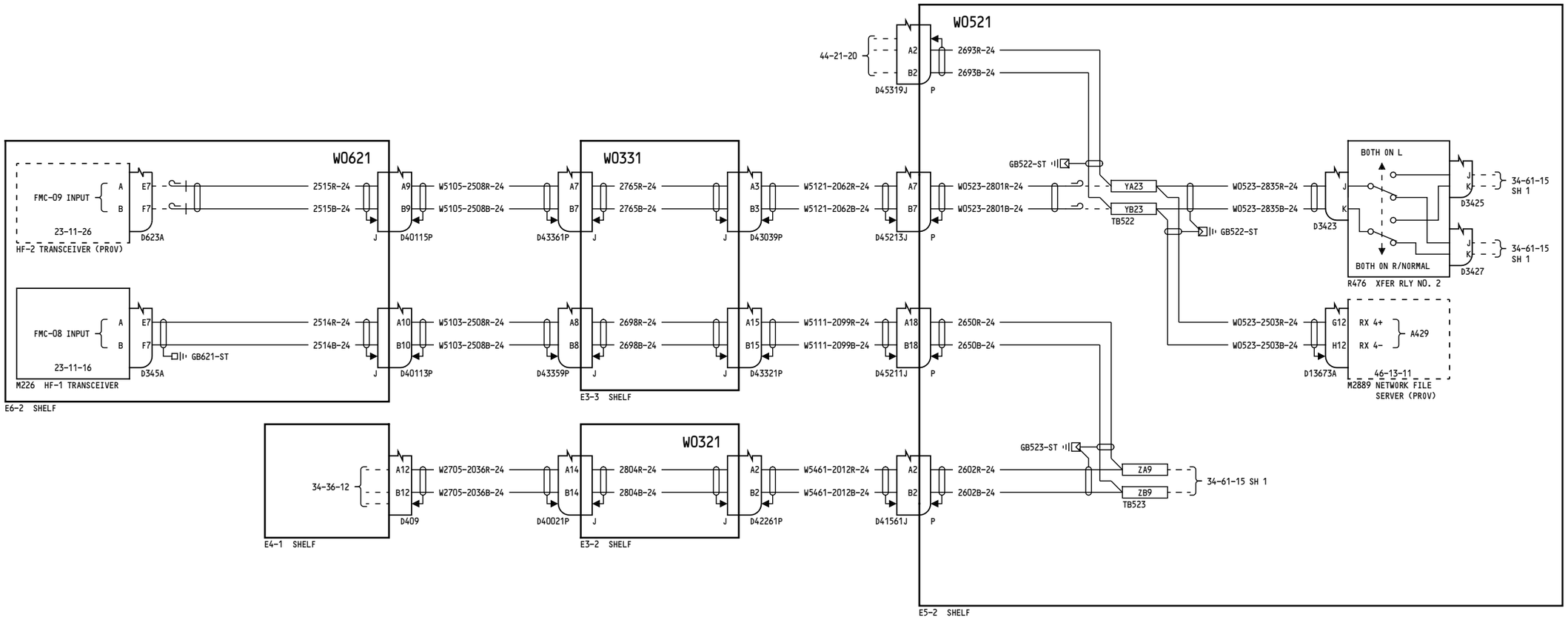

YT126-YT133	FMCS OUTPUT BUSSES FMC-08 AND FMC-09 D280A351

BOEING PROPRIETARY - Copyright © - Unpublished Work - See title page for details.

34-61-15
Page 7
Sheet 2
Jun 21/2016

-C
1

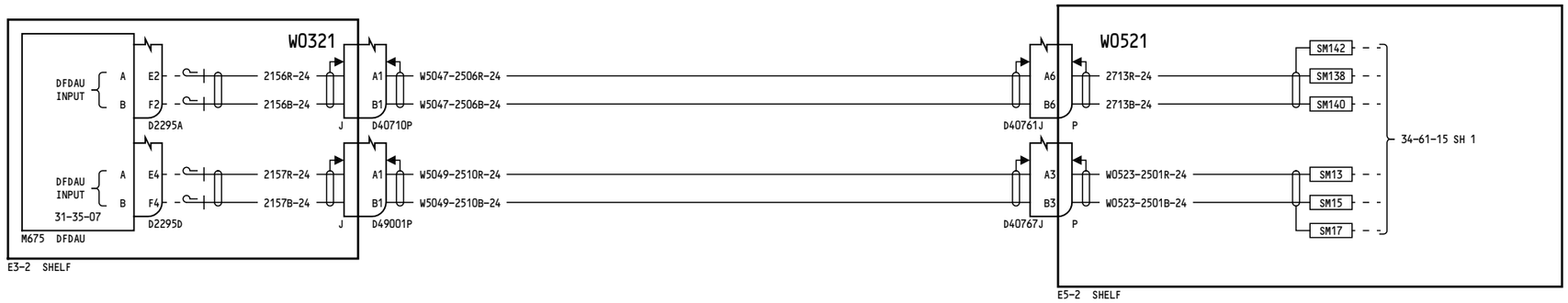

YT126-YT133

FMCS OUTPUT BUSSES
FMC-08 AND FMC-09

D280A351

BOEING PROPRIETARY - Copyright © - Unpublished Work - See title page for details.

34-61-15

Page 7
Sheet 3
Jun 21/2016

-C
2

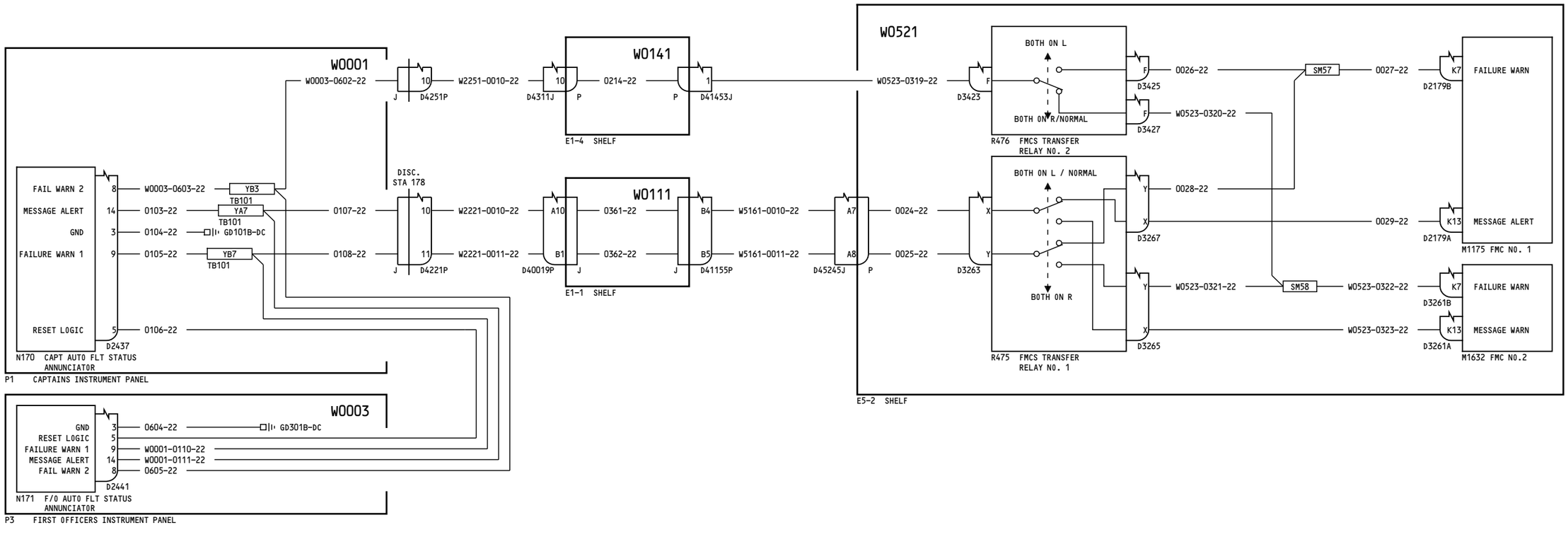

ALL	FMCS MESSAGE AND FAIL STATUS
	D280A351

BOEING PROPRIETARY - Copyright © - Unpublished Work - See title page for details.

34-61-16
Page 1
Jun 21/2016

-A
8

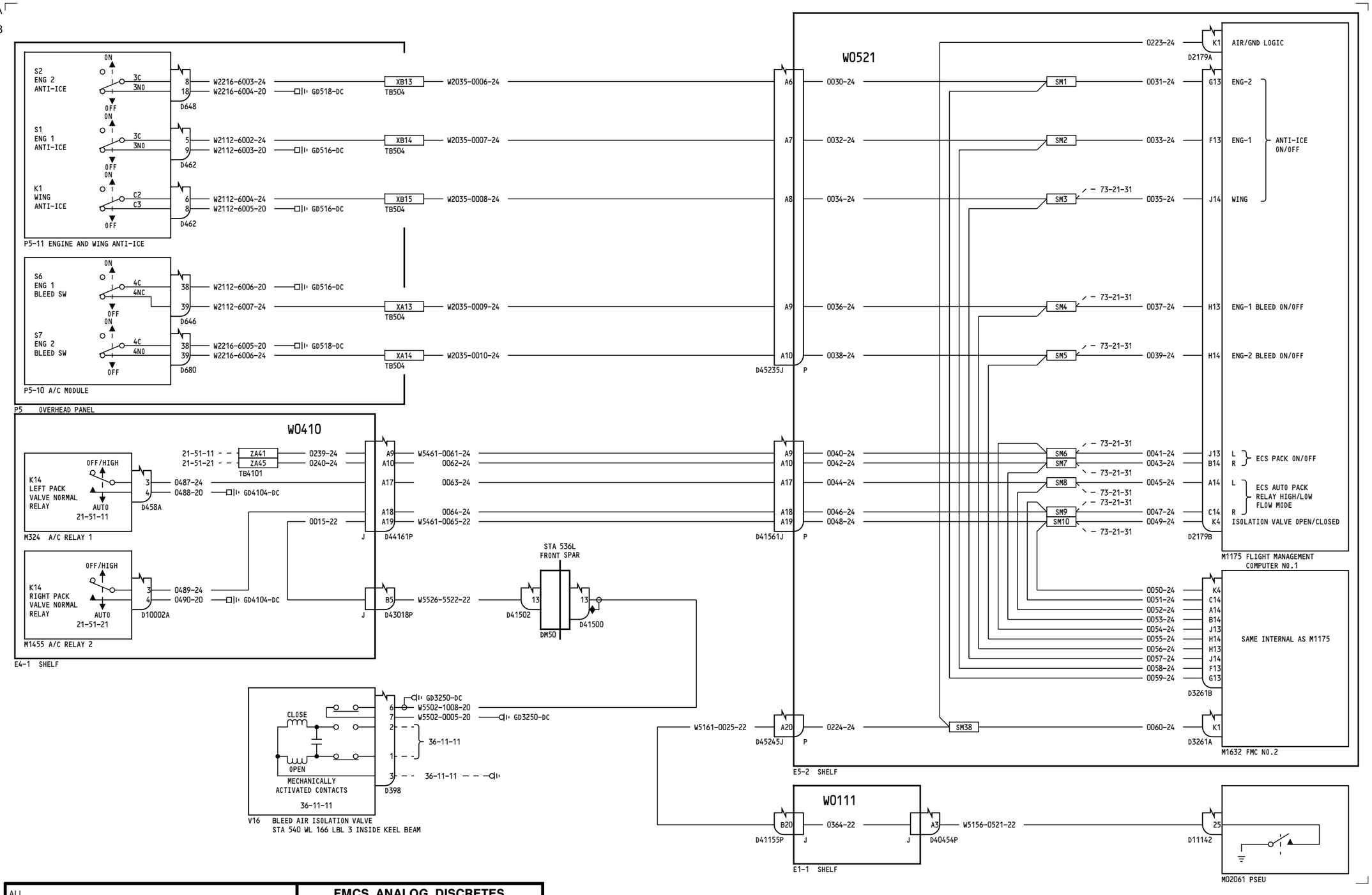

ALL	FMCS ANALOG DISCRETES
	D280A351

34-61-17
Page 1
Jun 21/2016

BOEING PROPRIETARY - Copyright © - Unpublished Work - See title page for details.

48

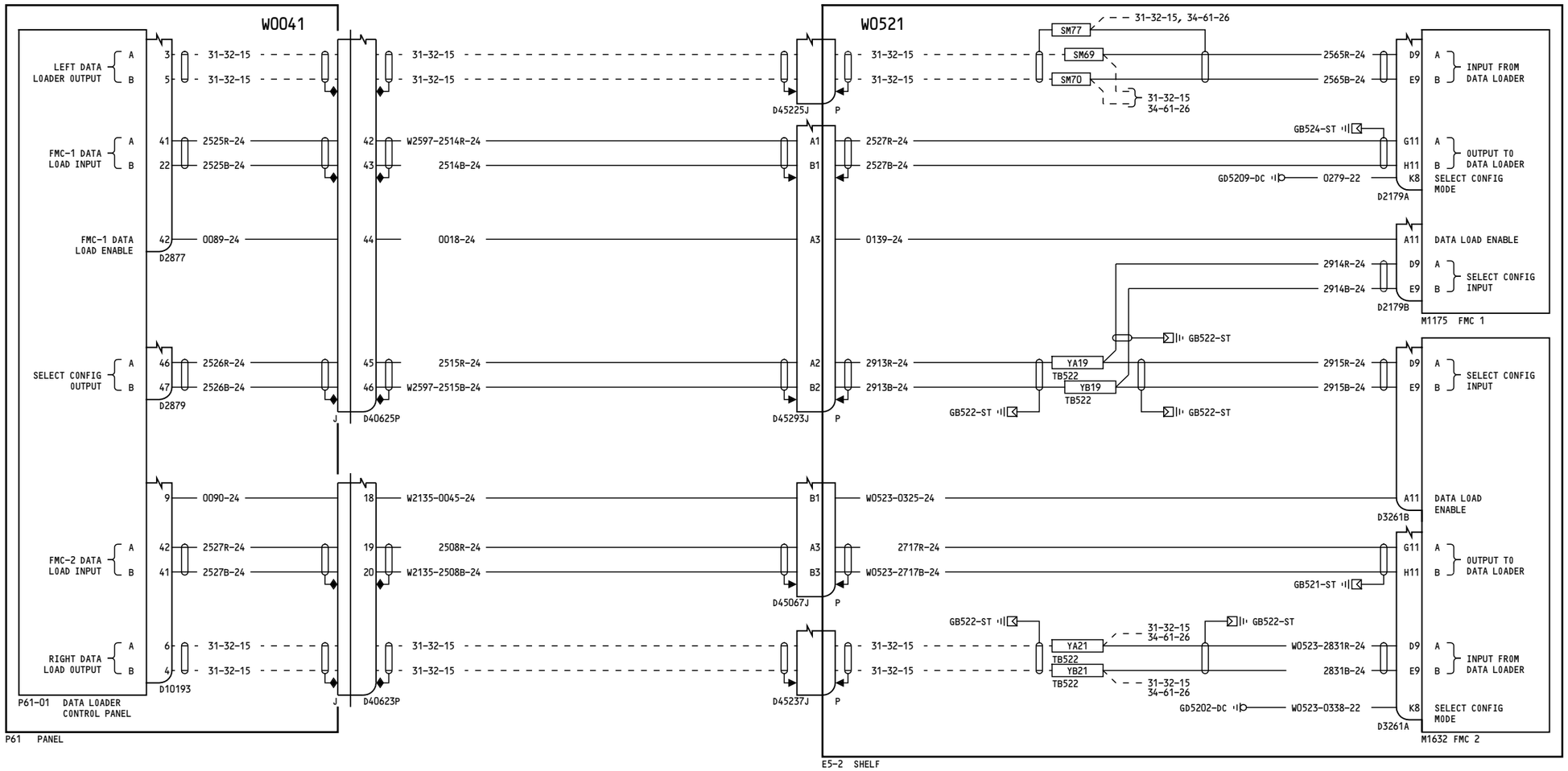

ALL	FMCS/DATA LOADER INTERFACE D280A351

BOEING PROPRIETARY - Copyright © - Unpublished Work - See title page for details.

34-61-18
Page 1
Jun 21/2016

764

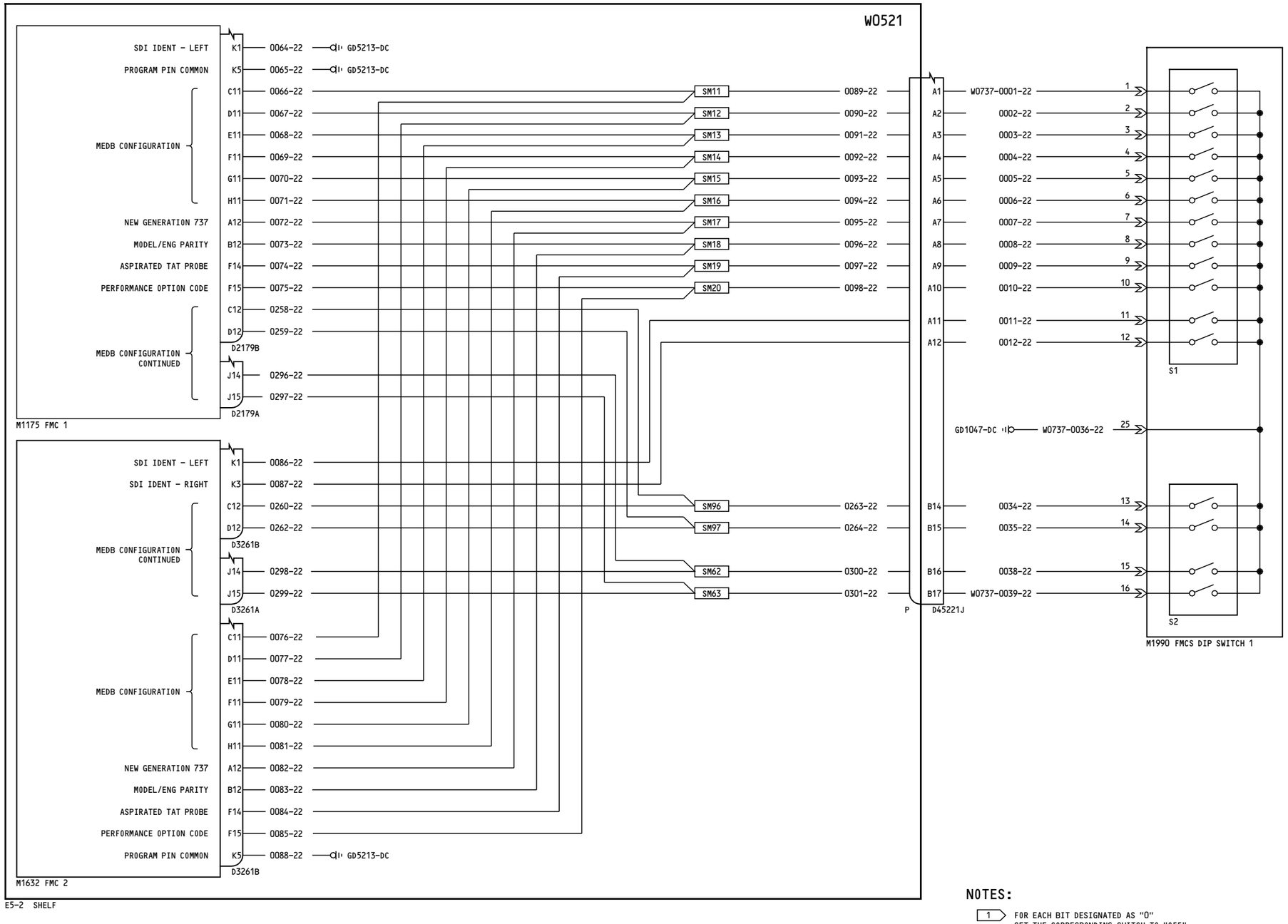

1

DIP SWITCH SETTINGS	
SWITCH NO.	SWITCH POSITION
1	0
2	1
3	1
4	1
5	1
6	0
7	0
8	0
9	0
10	1
11	0
12	1
13	0
14	0
15	1
16	0

NOTES:

1 FOR EACH BIT DESIGNATED AS "0" SET THE CORRESPONDING SWITCH TO "OFF" FOR EACH BIT DESIGNATED AS "1" SET THE CORRESPONDING SWITCH TO "ON" (FOR ANY UNUSED SWITCH, SET TO "OFF")

YT101-YT127, YT131-YT133

FMCS PROGRAM PINS

D280A351

BOEING PROPRIETARY - Copyright © - Unpublished Work - See title page for details.

34-61-19
Page 1
Sheet 1
Jun 21/2016

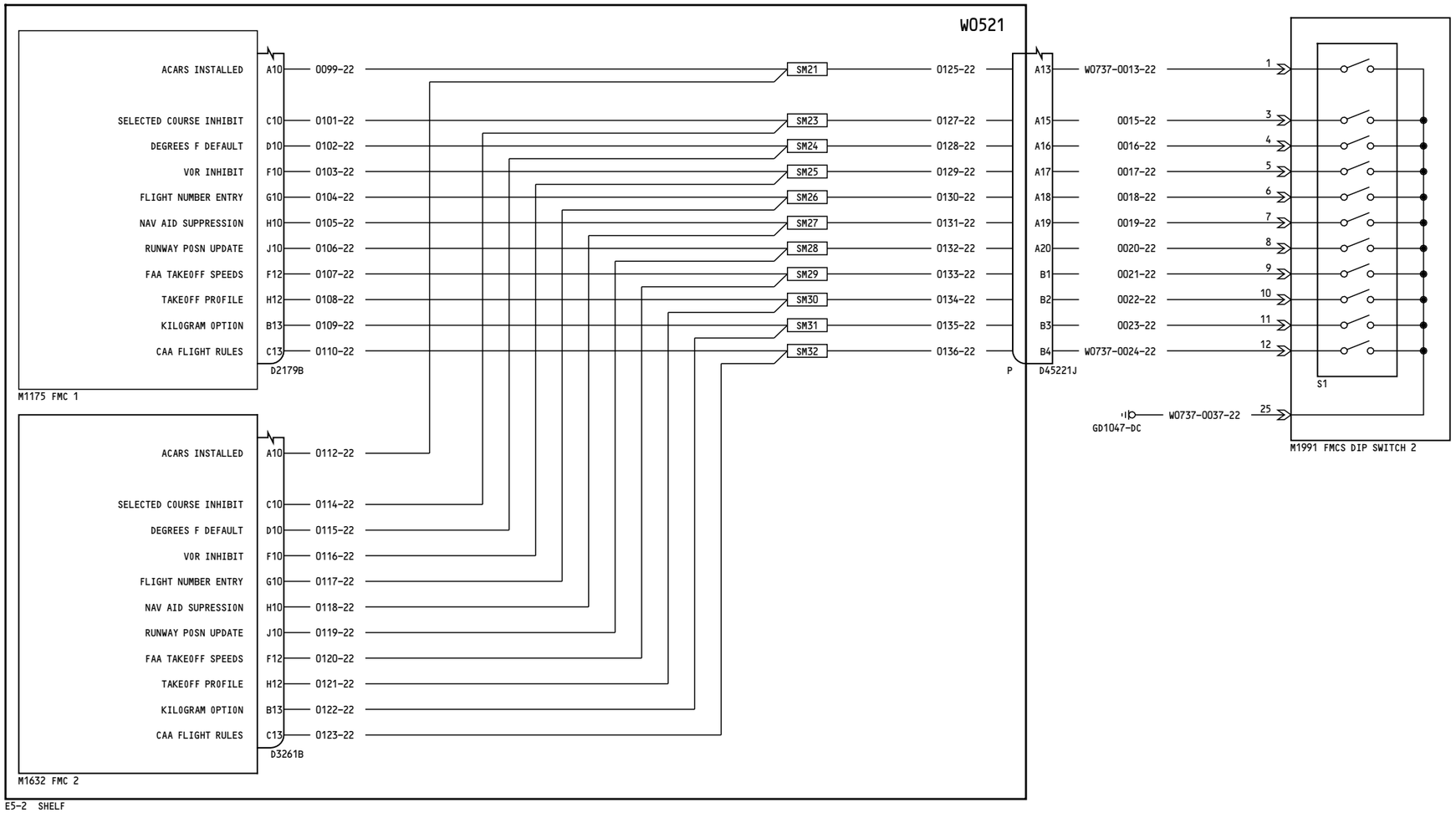

1

DIP SWITCH SETTINGS	
SWITCH NO.	SWITCH POSITION
1	1
2	N/A
3	0
4	0
5	0
6	1
7	1
8	1
9	0
10	1
11	1
12	1

NOTES:

1 FOR EACH BIT DESIGNATED AS "0"
SET THE CORRESPONDING SWITCH TO "OFF"
FOR EACH BIT DESIGNATED AS "1"
SET THE CORRESPONDING SWITCH TO "ON"
(FOR ANY UNUSED SWITCH, SET TO "OFF")

BOEING PROPRIETARY - Copyright © - Unpublished Work - See title page for details.

34-61-19

Page 1
Sheet 2
Jun 21/2016

755

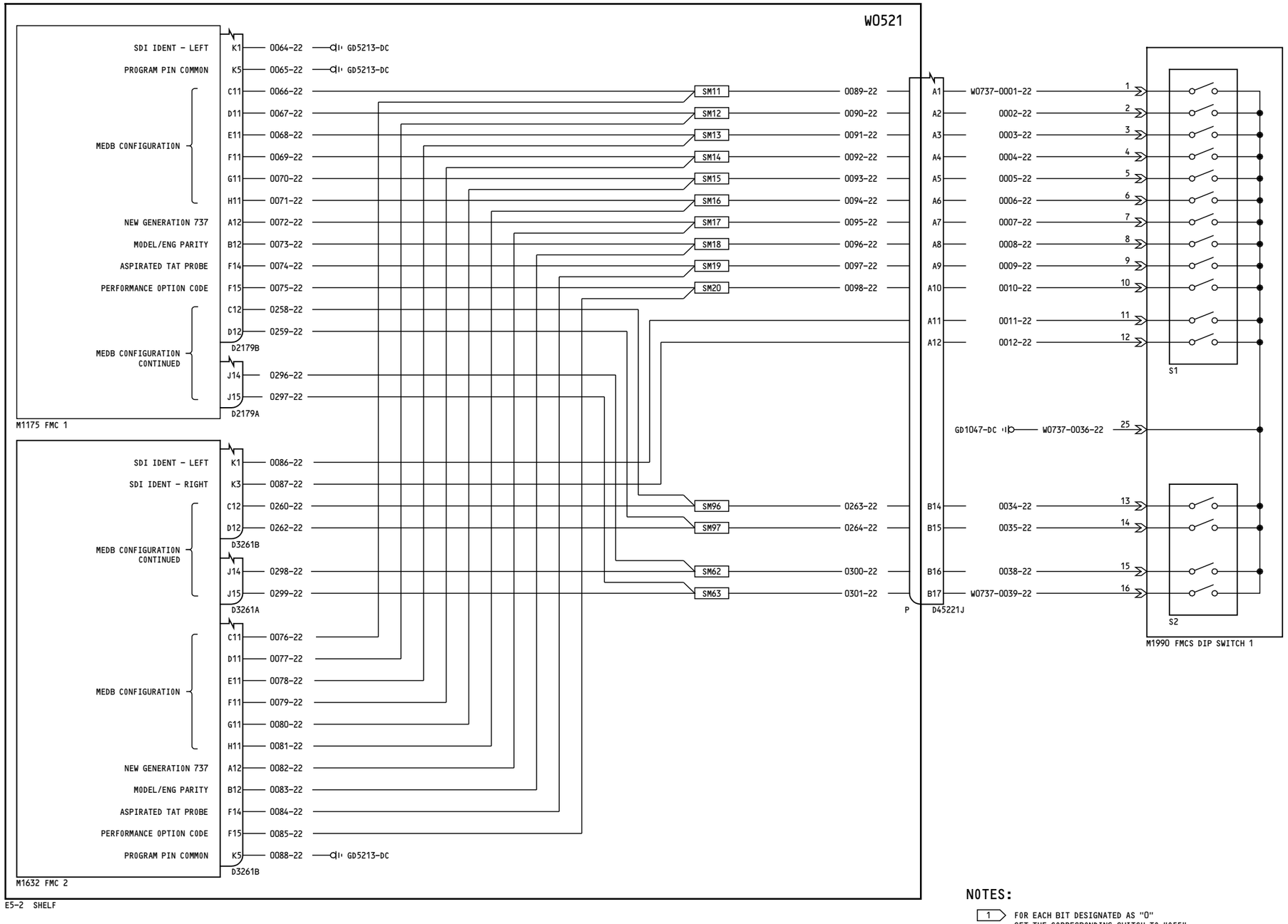

1

DIP SWITCH SETTINGS	
SWITCH NO.	SWITCH POSITION
1	1
2	0
3	1
4	1
5	1
6	0
7	0
8	0
9	0
10	1
11	0
12	1
13	0
14	0
15	1
16	0

E5-2 SHELF

NOTES:

1 FOR EACH BIT DESIGNATED AS "0"
SET THE CORRESPONDING SWITCH TO "OFF"
FOR EACH BIT DESIGNATED AS "1"
SET THE CORRESPONDING SWITCH TO "ON"
(FOR ANY UNUSED SWITCH, SET TO "OFF")

YT128-YT130

FMCS PROGRAM PINS

D280A351

BOEING PROPRIETARY - Copyright © - Unpublished Work - See title page for details.

34-61-19
Page 2
Sheet 1
Jun 21/2016

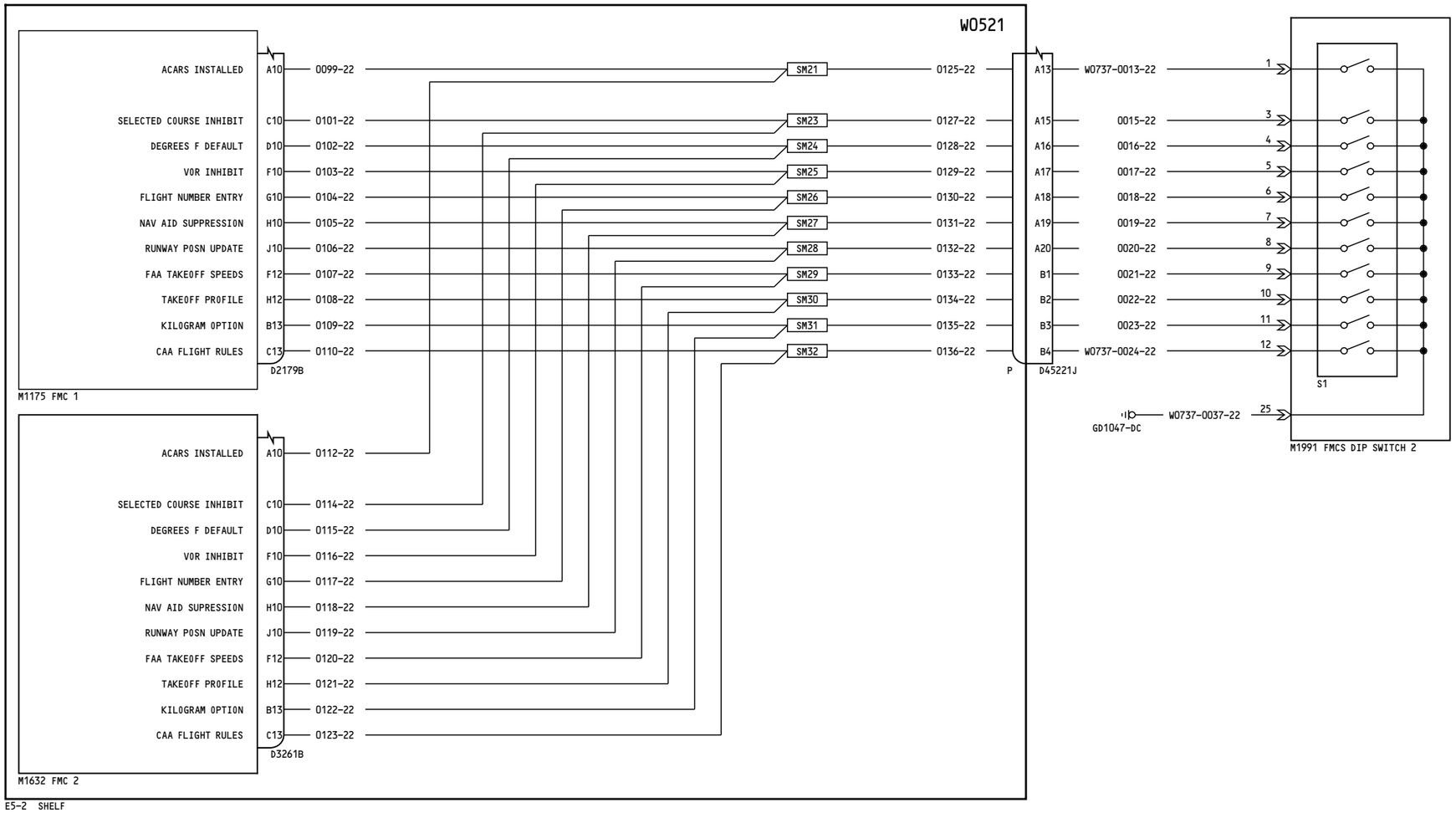

1

DIP SWITCH SETTINGS	
SWITCH NO.	SWITCH POSITION
1	1
2	N/A
3	0
4	0
5	0
6	1
7	1
8	1
9	0
10	1
11	1
12	1

NOTES:

1 FOR EACH BIT DESIGNATED AS "0"
SET THE CORRESPONDING SWITCH TO "OFF"
FOR EACH BIT DESIGNATED AS "1"
SET THE CORRESPONDING SWITCH TO "ON"
(FOR ANY UNUSED SWITCH, SET TO "OFF")

YT128-YT130	FMCS PROGRAM PINS
	D280A351

BOEING PROPRIETARY - Copyright © - Unpublished Work - See title page for details.

34-61-19
Page 2
Sheet 2
Jun 21/2016

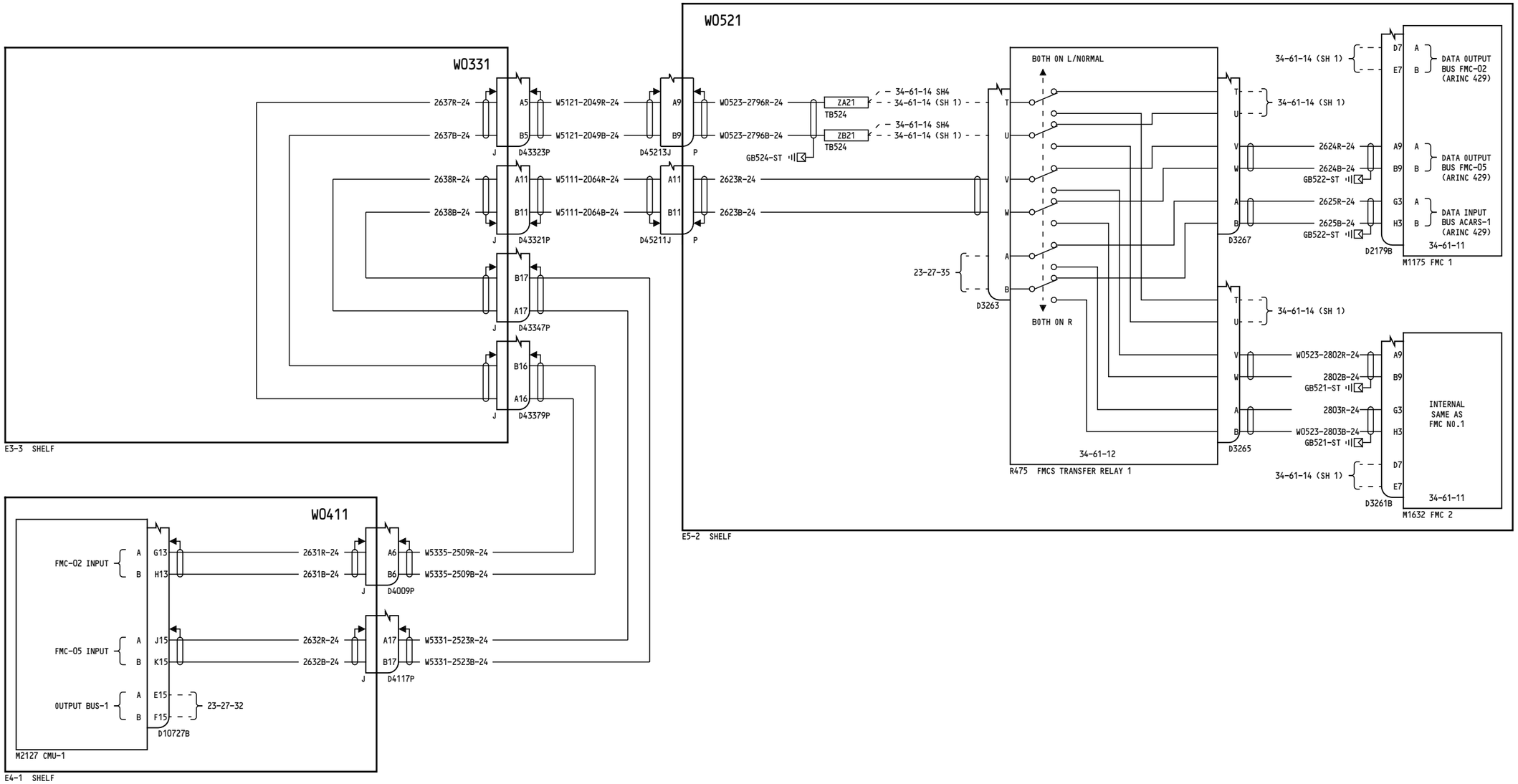

BOEING PROPRIETARY - Copyright © - Unpublished Work - See title page for details.

34-61-21

Page 1

Jun 29/2015

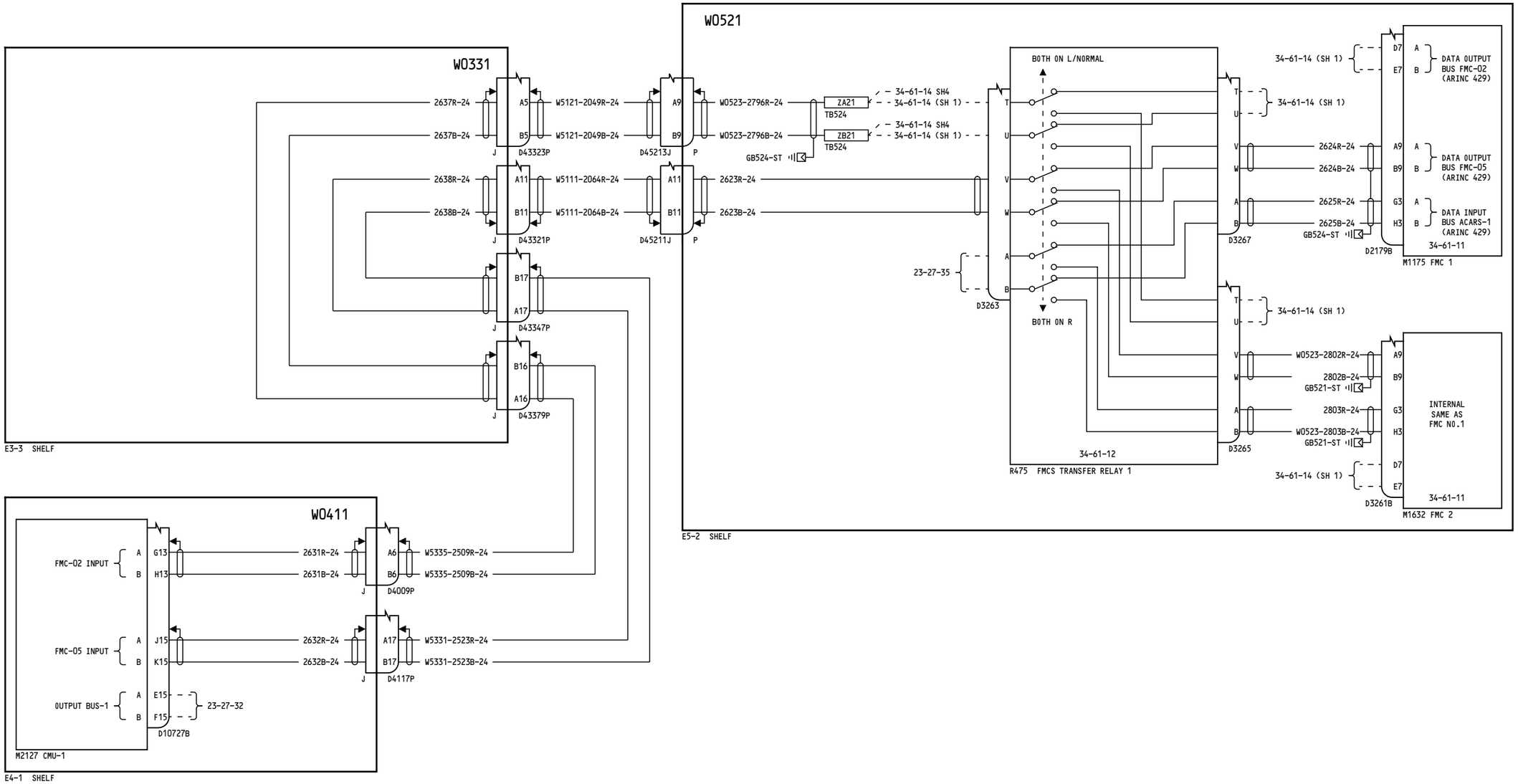

YT111-YT120

FMCS/MCDU INTERFACE WITH ACARS

D280A351

BOEING PROPRIETARY - Copyright © - Unpublished Work - See title page for details.

34-61-21

Page 2

Mar 14/2016

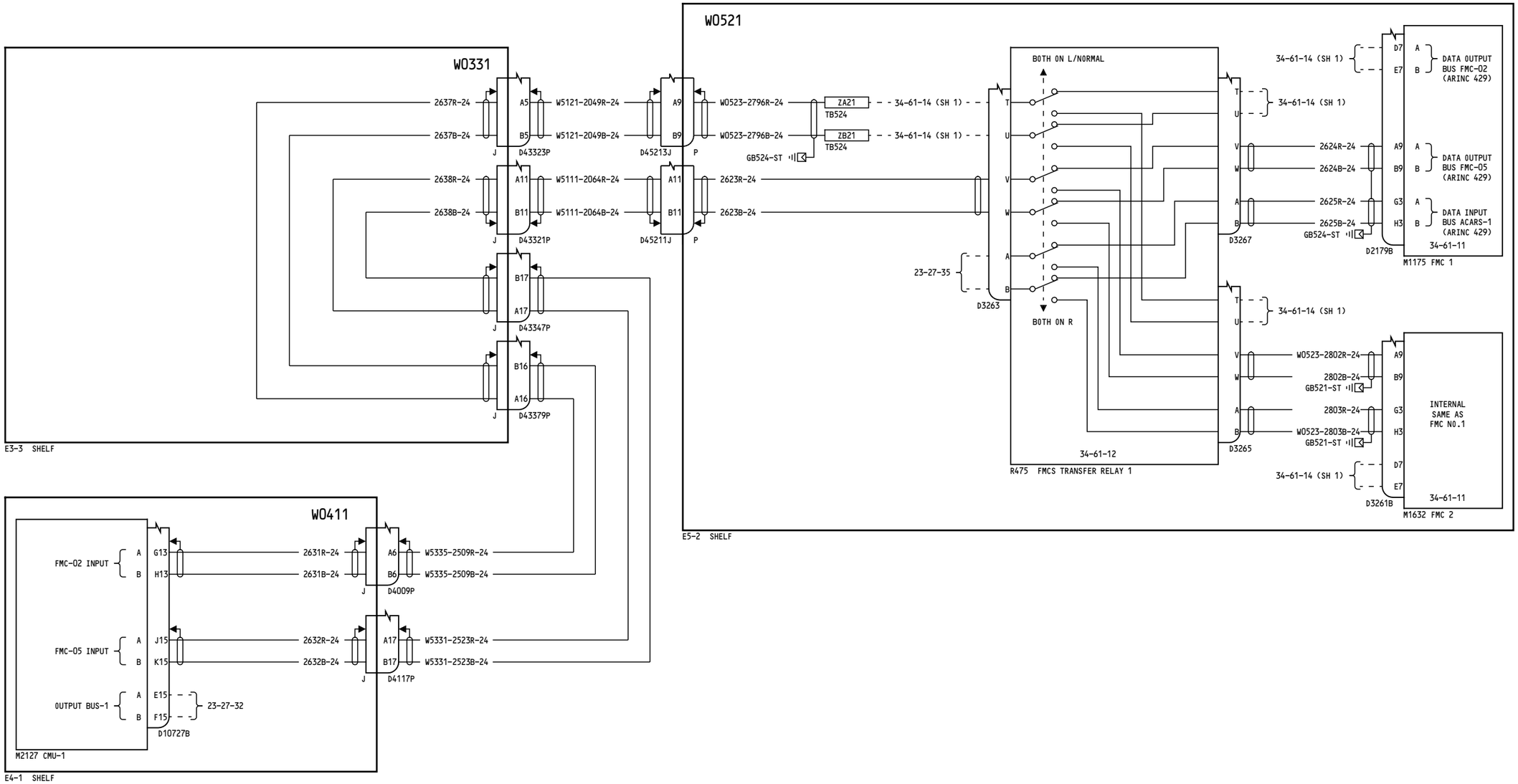

BOEING PROPRIETARY - Copyright © - Unpublished Work - See title page for details.

34-61-21
Page 3
Jun 21/2016

-C
11

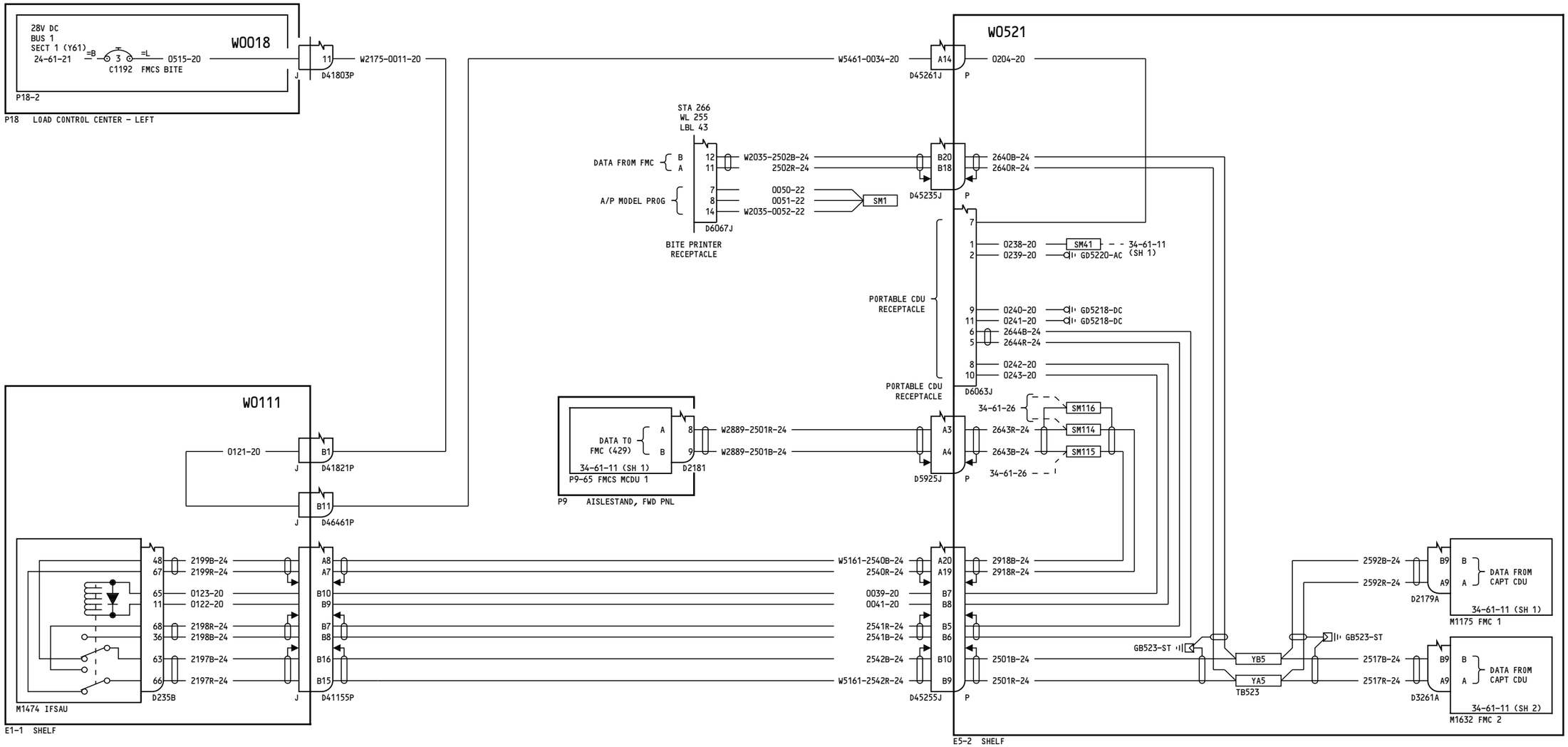

YT101	FMCS BITE PRINTER AND PORTABLE CDU RECEPTACLES	34-61-22
	D280A351	Page 1
		Aug 15/2013

34-61-22
Page 1
Aug 15/2013

BOEING PROPRIETARY - Copyright © - Unpublished Work - See title page for details.

-D
9

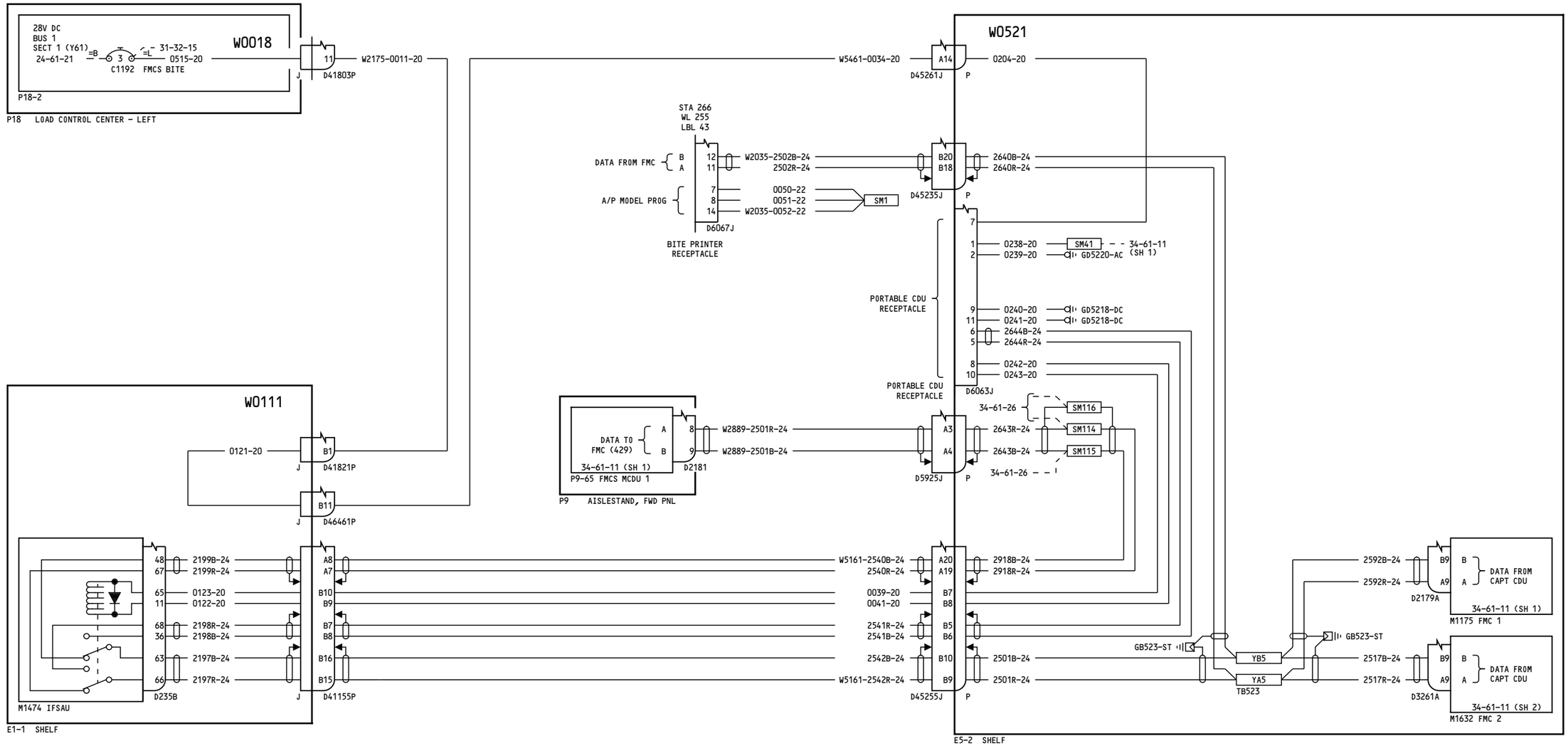

YT102-YT133	**FMCS BITE PRINTER AND PORTABLE CDU RECEPTACLES** D280A351	**34-61-22** Page 2 Jun 21/2016

34-61-22
Page 2
Jun 21/2016

BOEING PROPRIETARY - Copyright © - Unpublished Work - See title page for details.

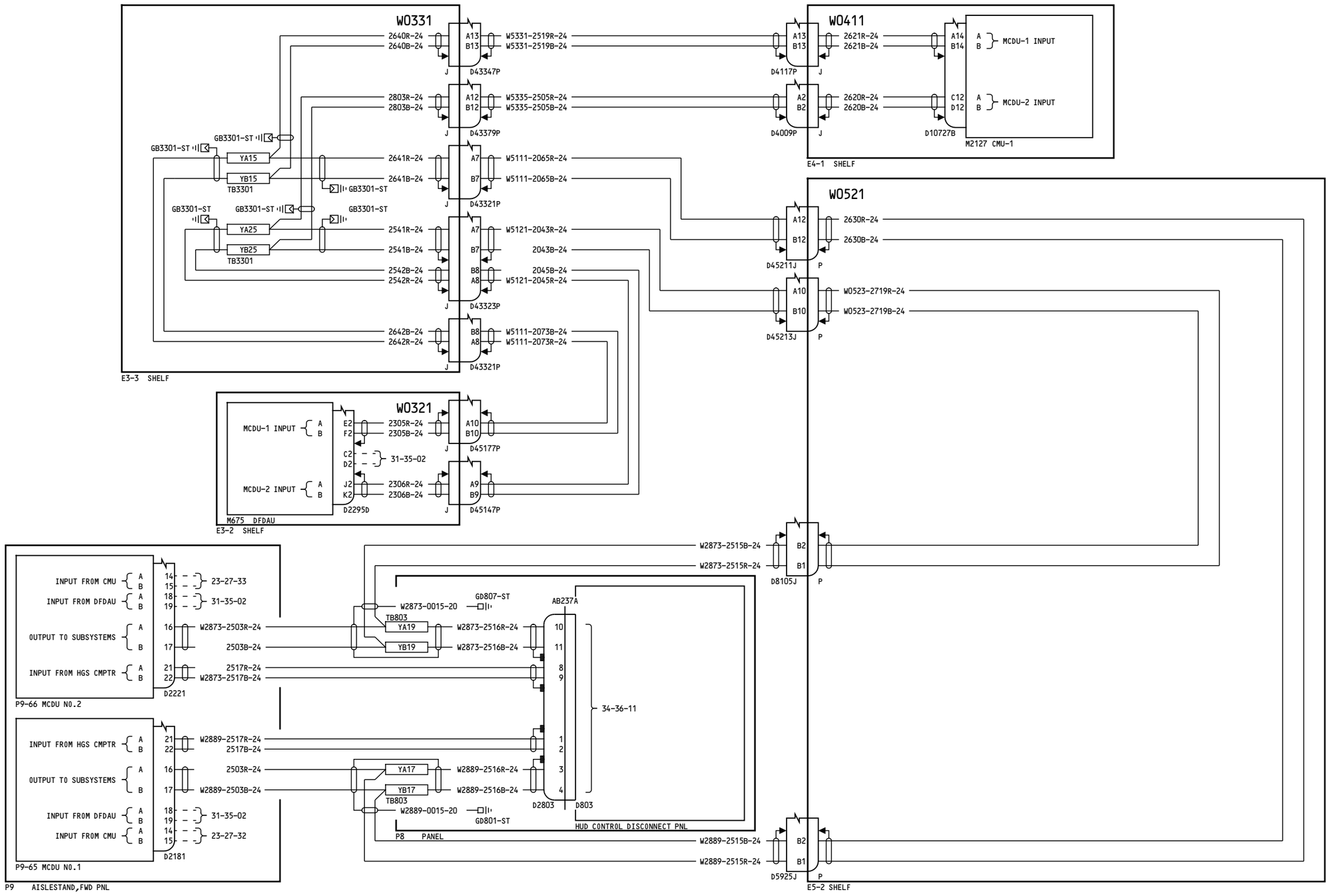

YT101-YT103

CDU/MCDU INTERFACE

D280A351

34-61-23
Page 1
Aug 15/2013

BOEING PROPRIETARY - Copyright © - Unpublished Work - See title page for details.

231

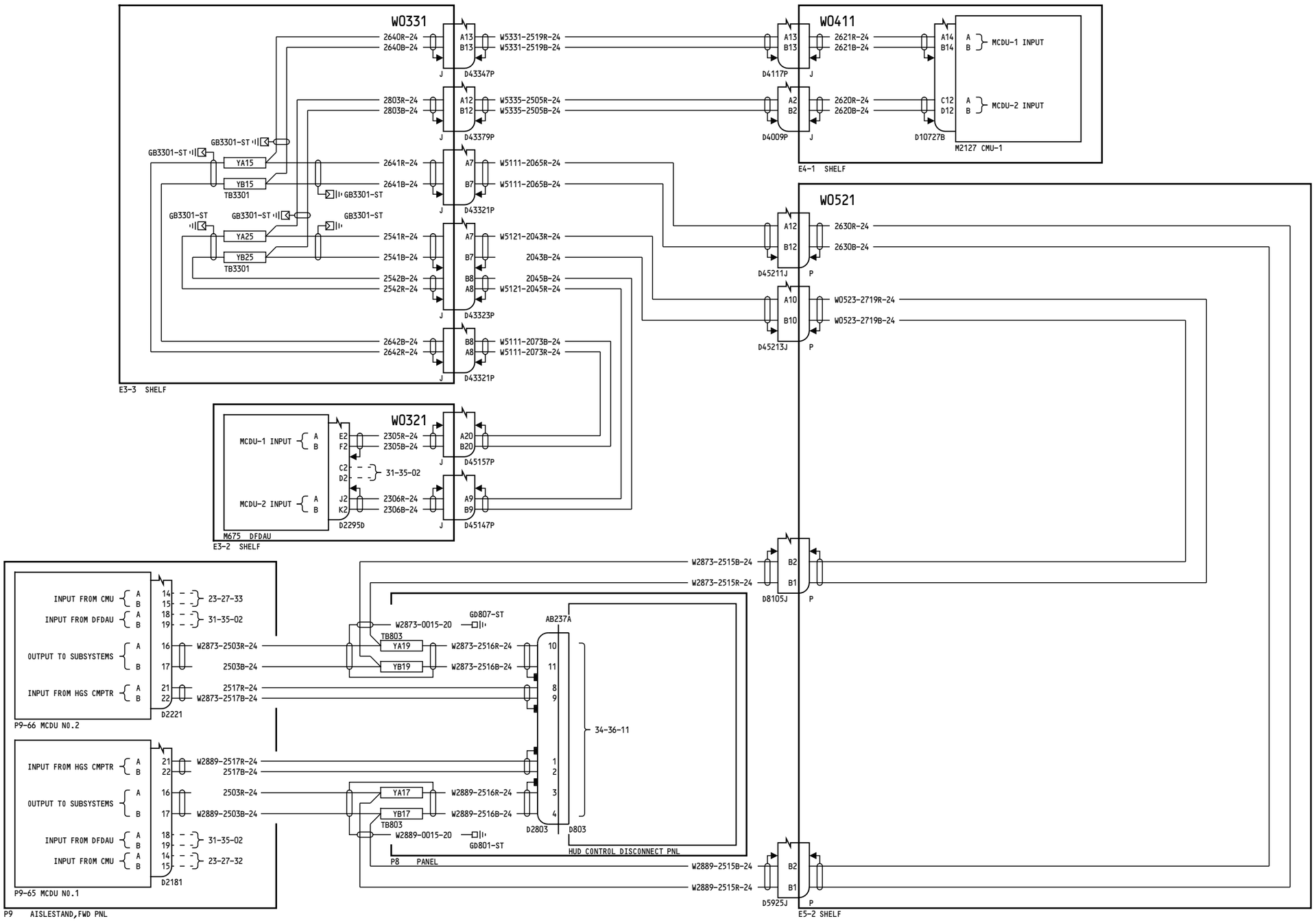

YT104-YT133

CDU/MCDU INTERFACE

D280A351

BOEING PROPRIETARY - Copyright © - Unpublished Work - See title page for details.

34-61-23

Page 2

Jun 21/2016

-B
12

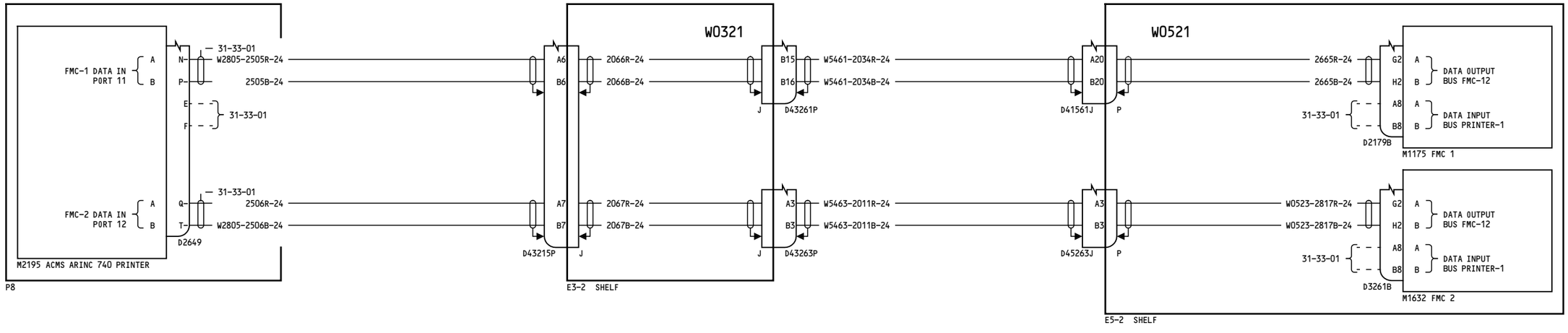

BOEING PROPRIETARY - Copyright © - Unpublished Work - See title page for details.

34-61-24

Page 1

Jun 21/2016

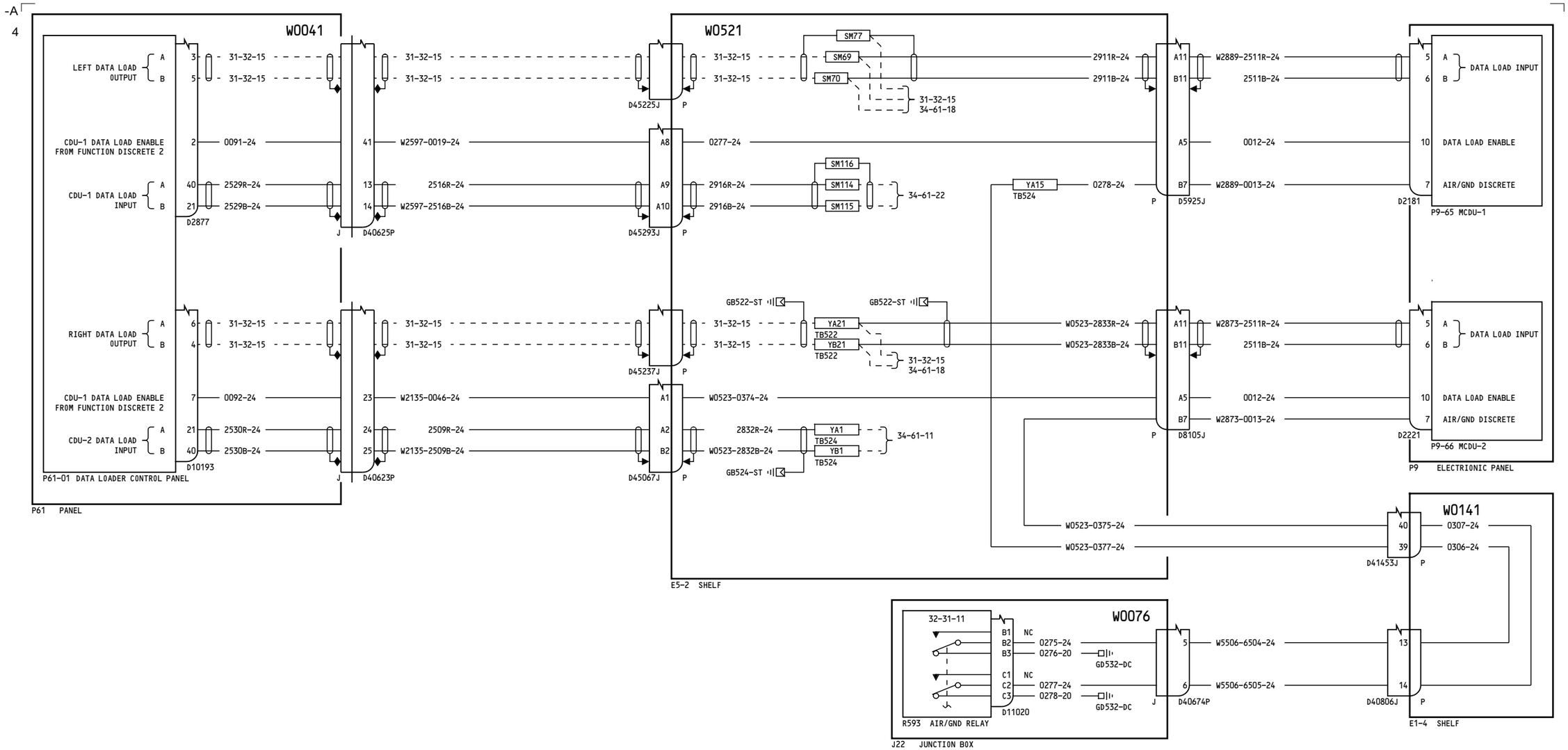

ALL	CDU/MCDU/DATA LOADER INTERFACE D280A351

BOEING PROPRIETARY - Copyright © - Unpublished Work - See title page for details.

34-61-26
Page 1
Jun 21/2016