PART 6 - EDDY CURRENT

LOWER LOBE CARGO COMPARTMENT CIRCUMFERENTIAL FRAMES - INNER FLANGE (LFEC)

1. Purpose

A. To detect cracks in the inner flange of the lower lobe cargo compartment circumferential frames.

B. This inspection is accomplished with low frequency eddy current without removing the cargo compartment sidewall liners.

C. Service Bulletin Reference: 737-53A1027

2. Equipment

NOTE: Refer to Part 1, 51-01-00, for data about the equipment manufacturers.

A. Instrument - Any eddy current instrument that will satisfy the requirements of this procedure is suitable for this inspection. The following instrument was used during development of this procedure:

(1) MIZ-10A; Zetec Inc.

B. Probes - This procedure uses two probes. Any probes of similar size satisfying the requirements of this procedure are acceptable. The following probes were used in the development of this procedure:

NOTE: Specify instrument with which probe is to be used or instrument connector required when ordering probes.

(1) Low frequency encircling probe with 0.5-inch inside diameter and 1.25-inch outside diameter; usable at 200-500 Hz; P/N SPO 783; Nortec Inc.

(2) Low frequency encircling probe with 0.3-inch inside diameter and 0.7-inch outside diameter shielding; usable at 2-3 kHz; P/N SPO 996; Nortec Inc.

C. Reference Standards 351A, 351B - Manufacture per Figure 2 and Figure 3, or procure P/N 6412-161 and P/N 6412-162 from Ideal Specialty Co.

3. Prepare for the Inspection

A. Wipe inspection area clean.

4. Instrument Calibration

A. Two inspections and two instrument calibrations are required:

(1) Inspection for cracks initiating at the fastener holes using an encircling probe centered on the fastener.

(2) Inspection for cracks using an encircling probe as a spot probe scanning between fasteners.

NOTE: The two inspections require different instrument calibrations to adjust for variations in structure geometry and materials.

(3) Figure 4 identifies inspection coverage for a particular calibration. Figure 1 provides specific calibration information for that particular inspection.

B. Calibration for fastener hole crack inspection using an encircling probe placed over the fastener head.

(1) Identify the corresponding calibration code from Figure 1 and Figure 4.

(2) Select the corresponding frequency and probe from Figure 1.

(3) Select the corresponding reference standard. See Figure 2 and Figure 3.

BOEING PROPRIETARY - Copyright © Unpublished Work - See title page for details

(4) Visually center probe over the unnotched reference standard hole, Figure 4, Position 1.

(5) Balance instrument per manufacturer's instructions.

(6) Adjust liftoff control per manufacturer's instructions to obtain the same response when the probe is on the standard as with the probe completely lifted off the standard.

NOTE: Probe is visually centered over uncracked hole during liftoff calibration. Once probe is calibrated for liftoff, centering is usually accomplished by manipulating the probe to obtain a minimum meter response.

(7) Center probe over the unnotched hole and adjust meter response to indicate 20% of full scale with meter position control.

NOTE: Probe is centered by manipulating to obtain a minimum meter response.

(8) Center probe over the cracked reference standard hole, Position 2. The response should be upscale.

(9) Adjust instrument sensitivity to obtain 60% of full scale meter response difference between the cracked and uncracked holes.

(10) Recheck null and liftoff. If readjustments are made recheck sensitivity per Paragraph 4.B.(9).

C. Calibration for finding a crack using an encircling probe as a spot probe.

(1) Select the corresponding Reference Standard. See Figure 2 and Figure 3.

(2) Identify the corresponding calibration code from Figure 1 and Figure 4.

(3) Select the corresponding frequency and probe from Figure 1.

(4) Set probe over the uncracked reference standard, Position 3.

(5) Balance instrument per manufacturer's instructions.

(6) Manipulate probe to obtain minimum reading (edge of frame will cause higher reading).

(7) Adjust liftoff control per manufacturer's instructions to obtain the same response when the probe is on the standard as with the probe completely lifted off the standard.

NOTE: Probe is located at Position 3 for liftoff calibration.

(8) With probe at Position 3, adjust meter position to 20% of full scale meter response.

(9) Set probe over the crack at Position 4. The response should be upscale.

(10) Adjust instrument sensitivity to obtain 80% of full scale meter deflection and 60% of full meter scale difference in response between cracked and uncracked areas of reference standard.

(11) Recheck null and liftoff. If readjustments are made, recheck sensitivity per Paragraph 4.C.(10).

5. Inspection Procedure

A. Inspection of fastener holes using an encircling probe centered over the fastener.

(1) Calibrate the instrument per Paragraph 4.B. and Figure 1.

(2) Inspect each fastener by placing the probe over the fastener.

(3) Manipulate the probe to obtain a minimum response.

NOTE: Recalibration is required for changes in washer material.

(4) Any location which gives a response 40% of full meter scale higher than the baseline response should be investigated further.

BOEING PROPRIETARY - Copyright © Unpublished Work - See title page for details

B. Inspection between fasteners using an encircling probe as a spot probe.

(1) Calibrate instrument per Paragraph 4.C. and Figure 1.

(2) Inspect each area by scanning the probe along the frame in the circumferential direction between fasteners.

NOTE: (1) A small meter response will result when the probe contacts the washer.

NOTE: (2) If the probe is not kept in the center of the frame chord, an upscale deflection will result from the chord edge.

(3) Any location which gives a response 30% of full meter scale higher than the baseline response should be investigated further.

NOTE: Steel fasteners or nutplates hidden beneath the liner in the inner flange of the frame will give crack-like indications.

BOEING PROPRIETARY - Copyright © Unpublished Work - See title page for details

CALIBRATION PARAMETERS				
CALIBRATION CODE	REFERENCE STANDARD	PROBE	INSTRUMENT FREQUENCY	NOTES
A	FIGURE 2	A	500 Hz	1
B	FIGURE 2	B	3 kHz	2
C	FIGURE 3	A	200 Hz	3
D	FIGURE 3	B	2 kHz	4

NOTES

A ENCIRCLING PROBE, INSIDE DIAMETER 0.5-INCH, OUTSIDE DIAMETER 1.0-INCH, P/N SPO 783, NORTEC INC.

B ENCIRCLING PROBE, INSIDE DIAMETER 0.3-INCH, OUTSIDE DIAMETER 0.7-INCH, P/N SPO 996, NORTEC INC.

1 FOR FASTENER HOLES WITH STEEL WASHER

2 FOR AREA BETWEEN FASTENERS

3 FOR FASTENER HOLES THAT HAVE AN ALUMINUM STRAP WITH STEEL WASHERS

4 FOR AREAS BETWEEN FASTENERS WITH AN ALUMINUM STRAP

2158985 S0000471754_V1

Calibration Parameters
Figure 1

BOEING PROPRIETARY - Copyright © Unpublished Work - See title page for details

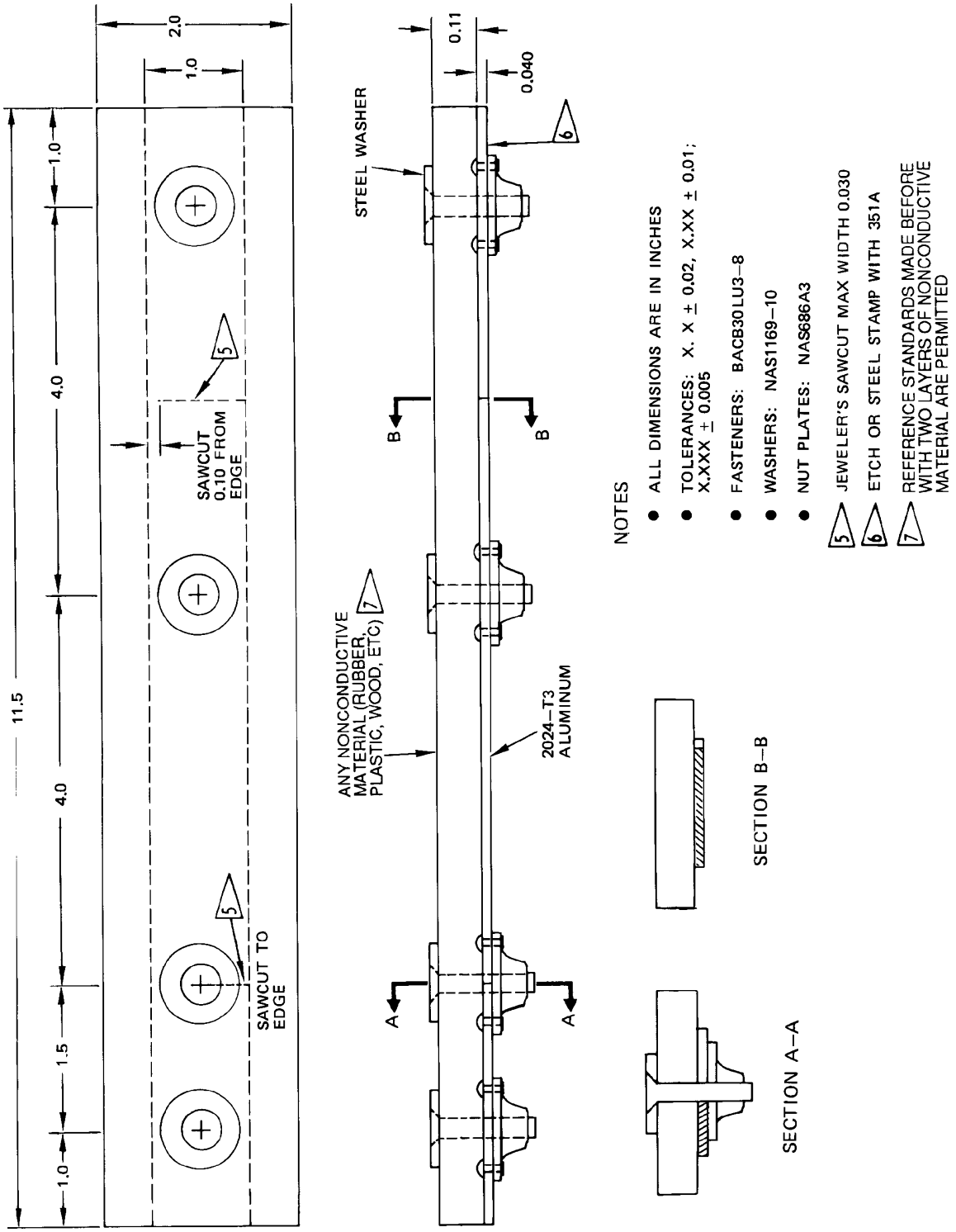

2158986 S0000471755_V1

Reference Standard 351A - Lower Lobe Frame without Aluminum Strap
Figure 2

BOEING PROPRIETARY - Copyright © Unpublished Work - See title page for details

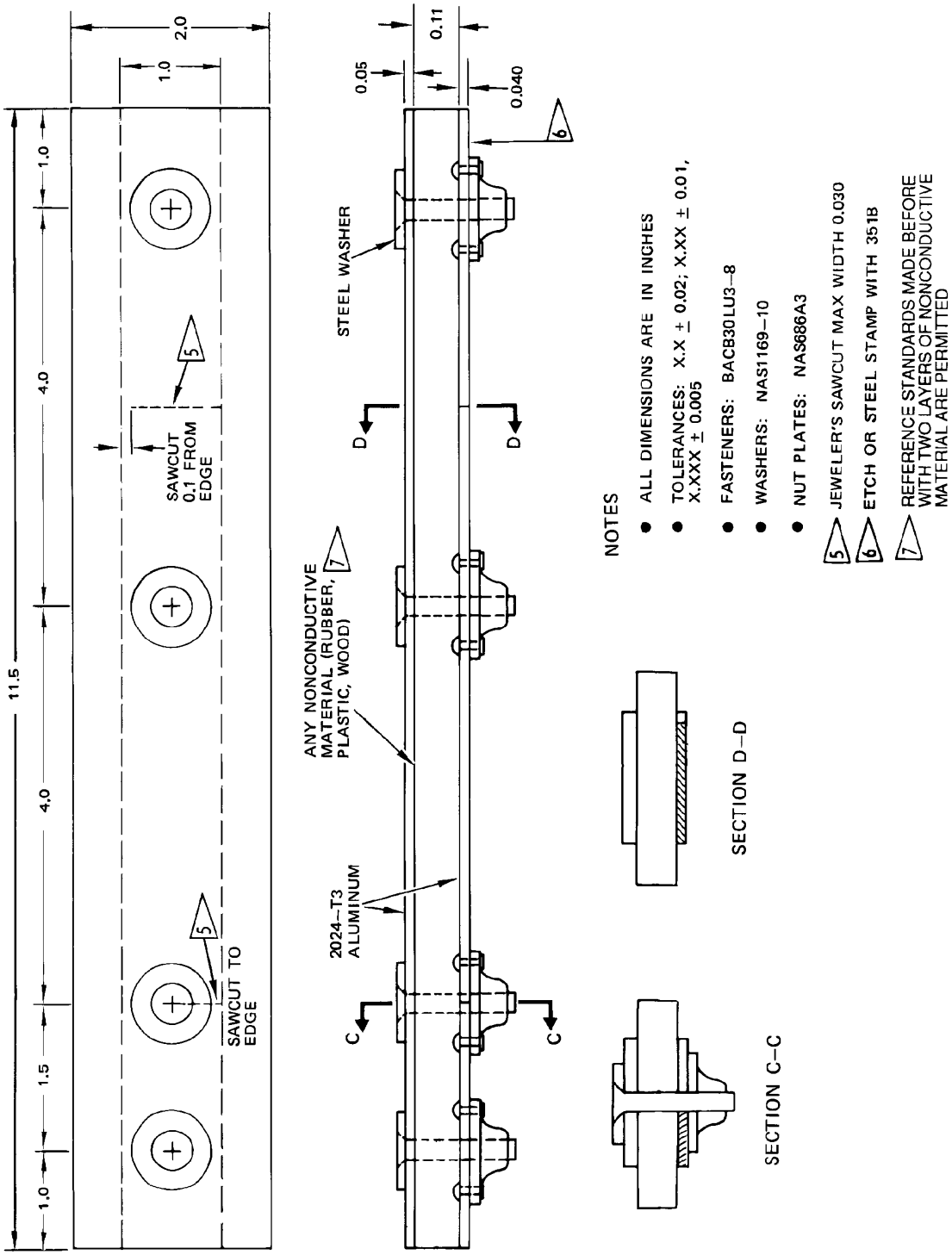

2158988 S0000471756_V1

Reference Standard 351B - Lower Lobe Frame with Aluminum Strap
Figure 3

BOEING PROPRIETARY - Copyright © Unpublished Work - See title page for details

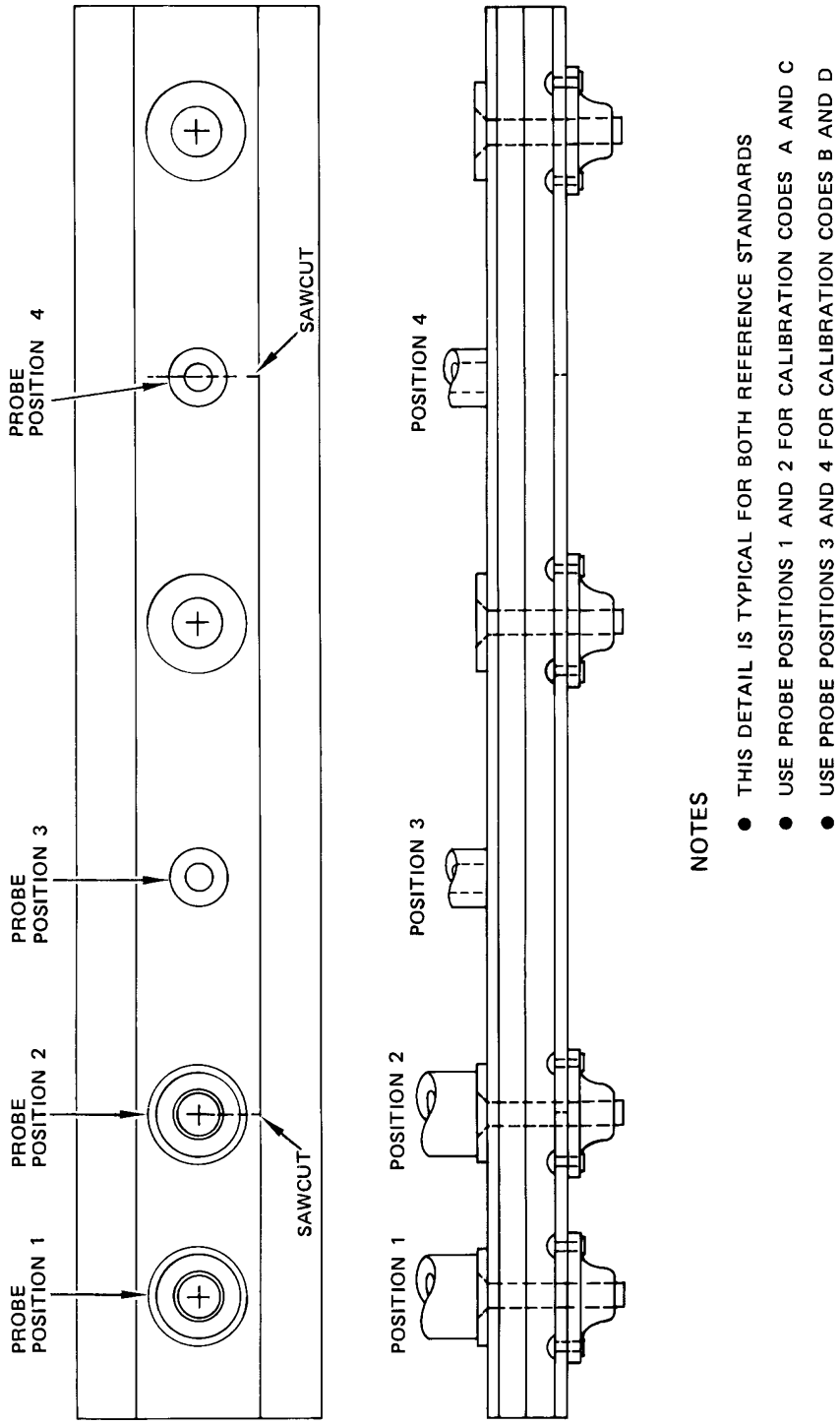

2158990 S0000471757_V1

Probe Calibration Positions - Lower Lobe Frame Reference Standards
Figure 4

BOEING PROPRIETARY - Copyright © Unpublished Work - See title page for details

PART 6 - EDDY CURRENT

FUSELAGE - OUTER CHORD HORIZONTAL FLANGE AT BS 227.8 FROM LBL 18.0 TO RBL 18.0 (LFEC)

1. Purpose

A. To detect cracks in horizontal flange, strap, doubler, and skin at BS 227.8, from LBL 18.0 to RBL 18.0, using low frequency eddy current.

B. 737 Supplemental Structural Inspection Document (D6-37089 and D6-82669) Reference:

(1) Item: F-22

(2) Item: F-22B

2. Equipment

NOTE: Refer to Part 1, 51-01-00, for data about the equipment manufacturers.

A. Any eddy current instrument and probe combination that will satisfy performance requirements of this procedure is suitable for this inspection. The following equipment was used in development of this procedure.

(1) Instrument - MIZ-10B; Zetec Inc.

(2) Probe - This procedure uses one probe. Any probe of similar size satisfying the performance requirements of this procedure is acceptable. The following probe was used in development of this procedure:

(a) Ring probe, Nortec P/N SPO - 996 with 0.30-inch (0.76 cm) ID, 0.70-inch (1.78 cm) OD, shielded, usable at 1.0 kHz, available from Nortec, Inc.

(3) Reference Standards - Use reference standard A352. See Figure 1.

3. Prepare for the Inspection

A. Clean inspection surface and remove loose paint.

4. Instrument Calibration

A. Calibration for fastener hole crack inspection using ring probe centered on fastener.

(1) Set frequency at 1.0 kHz.

(2) Visually center probe over unnotched reference standard hole. See Figure 2, Position 1.

(3) Balance instrument per manufacturer's instructions.

(4) Adjust liftoff control per manufacturer's instructions to obtain the same response when probe is on bare standard as when probe is lifted off the part by 0.006 inch (approximately the thickness of two sheets of paper).

NOTE: Probe is visually centered over unnotched hole during liftoff calibration. Obtain minimum meter reading.

(5) Visually recenter probe over unnotched hole and obtain a minimum meter response. Adjust meter response to read 20 percent of full scale with meter position control.

(6) Center probe over notched reference standard hole. See Figure 2, Position 2. Response should be upscale.

BOEING PROPRIETARY - Copyright © Unpublished Work - See title page for details

(7) Adjust instrument sensitivity to obtain a 70 percent of full scale, or 50 percent meter response difference between notched and unnotched holes (Position 2 and Position 1).

(8) Recheck null and liftoff. If readjustments are made, recheck sensitivity per Paragraph 4.A.(7).

(9) Cracks will be indicated by a higher meter response.

5. Inspection Procedure

A. Inspection of fastener holes for cracks using ring probe centered on fastener.

(1) Calibrate instrument per Paragraph 4.

(2) Use several fasteners to establish airplane baseline response for an acceptable fastener.

(a) Select a representative fastener from this group and set its response to 20 percent of full meter scale.

NOTE: Do not change instrument sensitivity when establishing the airplane baseline response.

(b) Refer back to this fastener periodically to ensure instrument response is same as originally recorded.

NOTE: Changes in meter response may occur as a result of instrument drift or probe temperature change.

(3) Inspect each fastener per Figure 3 by visually centering probe on fastener and manipulating to obtain minimum meter response.

6. Inspection Results

A. Fastener locations that give a response 30 percent of full meter scale higher than the established baseline are potential crack indications and further investigation is required.

NOTE: The following conditions may cause meter reading changes similar to crack indications:

(1) A decrease in fastener spacing - Compare with similarly spaced fasteners on the airplane or reference standard.

(2) A larger or smaller fastener - Compare with similar fasteners on reference standard and on airplane.

(3) A fastener that is different in countersink depth - Compare with similar fastener in standard raised to the same height.

(4) A fastener close to the edge of the skin - Check drawings and compare with similar fasteners on the airplane.

(5) Difference in conductivity between skin panels - Compare only inspection locations common to a skin panel.

(6) Placing or scanning probe too close to a magnetic steel fastener - Compare the response obtained with the probe near a similar fastener, or by scanning the probe around the fastener at a constant distance away from it.

(7) Magnetic metal chips in paint - Remove paint and reinspect.

B. When investigating crack-like indications, compare meter response obtained at the same location on the opposite side of the airplane or at the same location on another airplane of the same configuration.

C. A downscale (lower) meter reading is an indication of metal thickening which indicates probe is over a beam chord or stiffener flange.

BOEING PROPRIETARY - Copyright © Unpublished Work - See title page for details

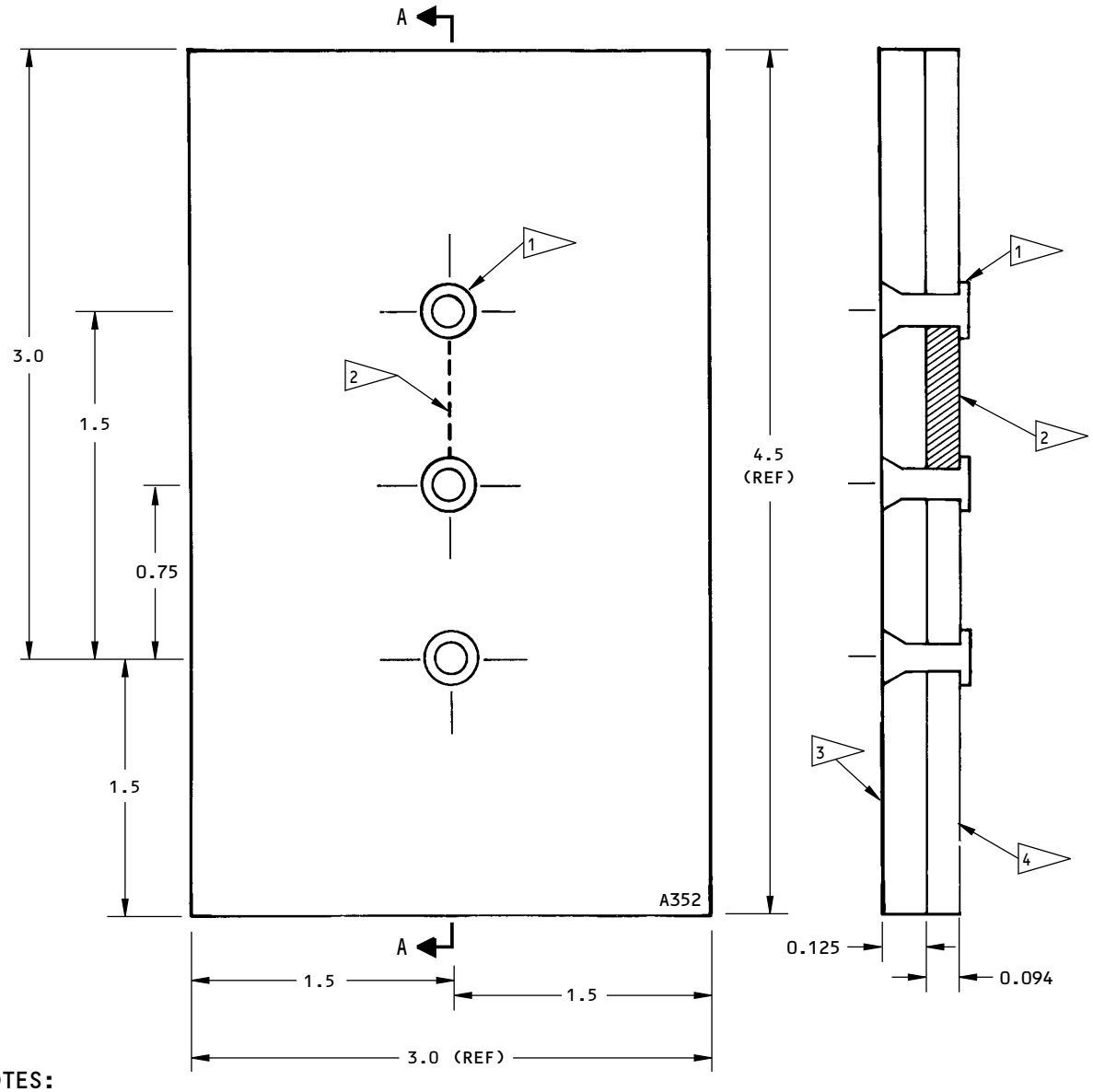

NOTES:

- ALL DIMENSIONS ARE IN INCHES
- TOLERANCE X.X 0.05, X.XX 0.02, X.XXX 0.005
- ETCH OR STEEL STAMP WITH A352. PUT A LETTER "A" IN FRONT OF THE REFERENCE STANDARD NUMBER TO SHOW THAT IT HAS ALODINED RIVETS. SEE FLAGNOTE 1.

1 BACR15CE6D6 RIVET (3 LOCATIONS). THESE RIVETS MUST HAVE A CONVERSION COATED (ALODINED) FINISH. TO MAKE SURE THE FINISH IS ALODINE, REFER TO PART 1, 51-06-01. INSTALL THE RIVETS AS SPECIFIED IN PART 1, 51-01-04.

2 JEWELER'S SAWCUT 0.03 MAXIMUM WIDTH

3 MATERIAL: 2024-T3 CLAD AL

4 MATERIAL: 7075-T6 BARE AL

2159100 S0000471759_V1

Reference Standard A352
Figure 1

BOEING PROPRIETARY - Copyright © Unpublished Work - See title page for details

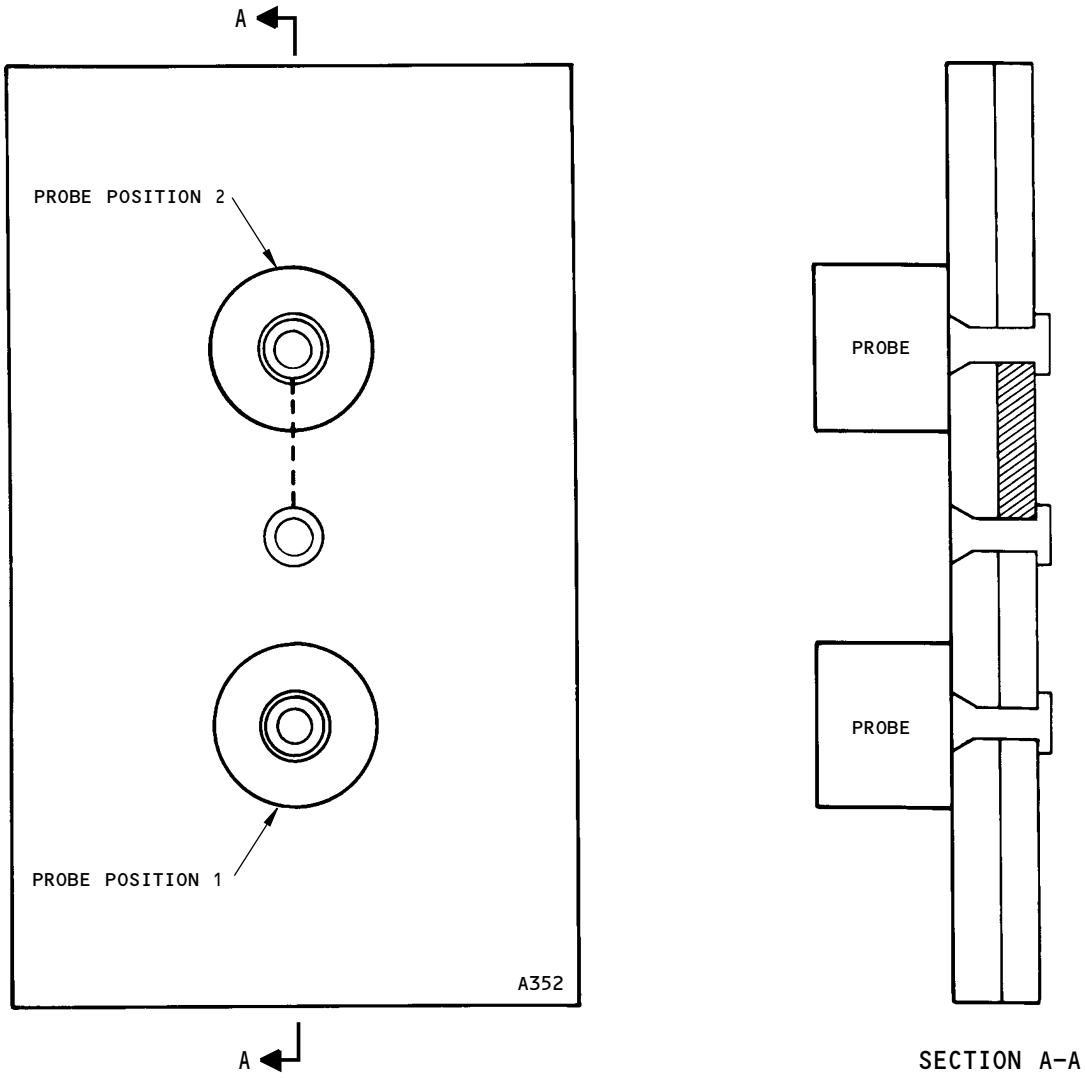

2159101 S0000471760_V1

Probe Position for Calibration on Reference Standard A352
Figure 2

BOEING PROPRIETARY - Copyright © Unpublished Work - See title page for details

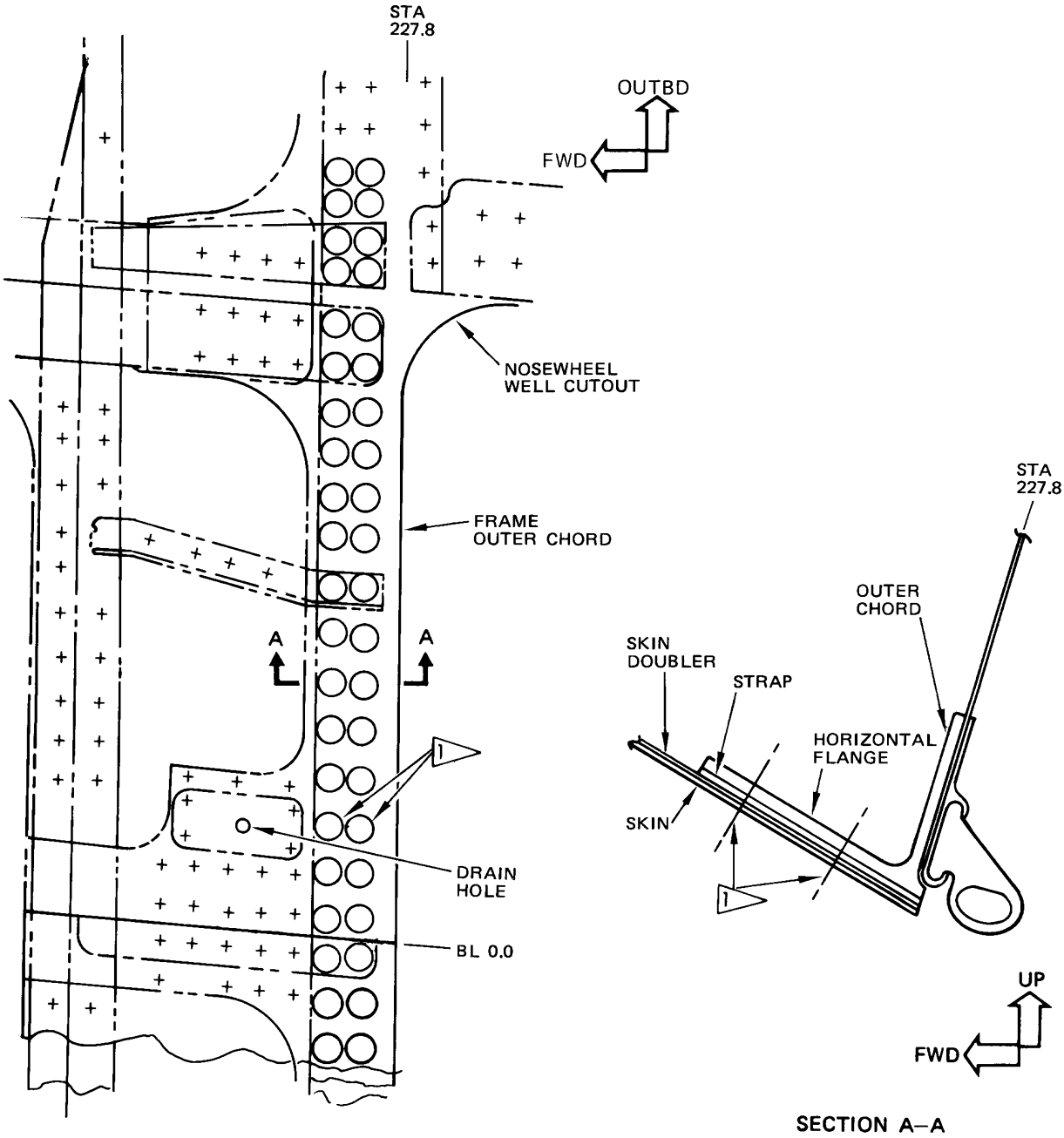

NOTES

- LEFT SIDE SHOWN, RIGHT SIDE SIMILAR
- ○ FASTENERS TO BE INSPECTED
- 1 INSPECT BY CENTERING PROBE ON EACH FASTENER

2159102 S0000471761_V1

Outer Chord Horizontal Flange, Skin, Skin Doubler and Strap at BS 227.8 from LBL 18.0 to RBL 18.0
Figure 3

BOEING PROPRIETARY - Copyright © Unpublished Work - See title page for details

PART 6 - EDDY CURRENT

FUSELAGE - INNER CHORD AT COCKPIT FLOOR BS 227.8, WL 207.5 (HFEC)

1. Purpose

A. Use this high frequency eddy current procedure to examine the inner chord of the frame at BS 227.8 for cracks. The area of the inner chord that is examined is from 5.0 inches above and below the cockpit floor at WL 207.5.

B. This procedure uses an instrument with an impedance plane display or a meter display.

C. 737 Supplemental Structural Inspection Document (D6-37089) Reference:

(1) Item: F-22

2. Equipment

A. General

(1) Use inspection equipment that can be calibrated on the reference standard as specified in Paragraph 4.

(2) Refer to Part 1, 51-01-00, for data about the equipment manufacturers.

B. Instrument, Probes and Reference Standard

(1) Refer to Part 6, 51-00-00, Procedure 4, if a meter display instrument is used and Part 6, 51-00-00, Procedure 23 if an impedance plane display instrument is used.

(2) Use a shielded, right angle, pencil probe as specified in Part 6, 51-00-00, Procedure 4, or Part 6, 51-00-00, Procedure 23.

NOTE: Shielded pencil probes MP-9003-50B or MP-9003-50FX are available from NDT Product Engineering. MP-9003-50FX has a flexible handle and can be bent to the necessary shape.

3. Prepare for the Inspection

A. Get access to the inner chord of the frame at BS 227.8 from the cockpit and/or through the forward access door.

B. Remove the trim panels and fold back the insulation.

C. Clean the inspection surfaces.

4. Instrument Calibration

A. Calibrate the instrument as specified in Part 6, 51-00-00, Procedure 4, if a meter display instrument is used or Part 6, 51-00-00, Procedure 23, if an impedance plane display instrument is used.

5. Inspection Procedure

A. Examine the inner chord of the frame at BS 227.8 as specified in Figure 1.

(1) Do the inspection scans as specified in Part 6, 51-00-00, Procedure 4, or Part 6, 51-00-00, Procedure 23.

6. Inspection Results

A. Refer to the applicable inspection procedure for data to help make an analysis of the inspection results.

BOEING PROPRIETARY - Copyright © Unpublished Work - See title page for details

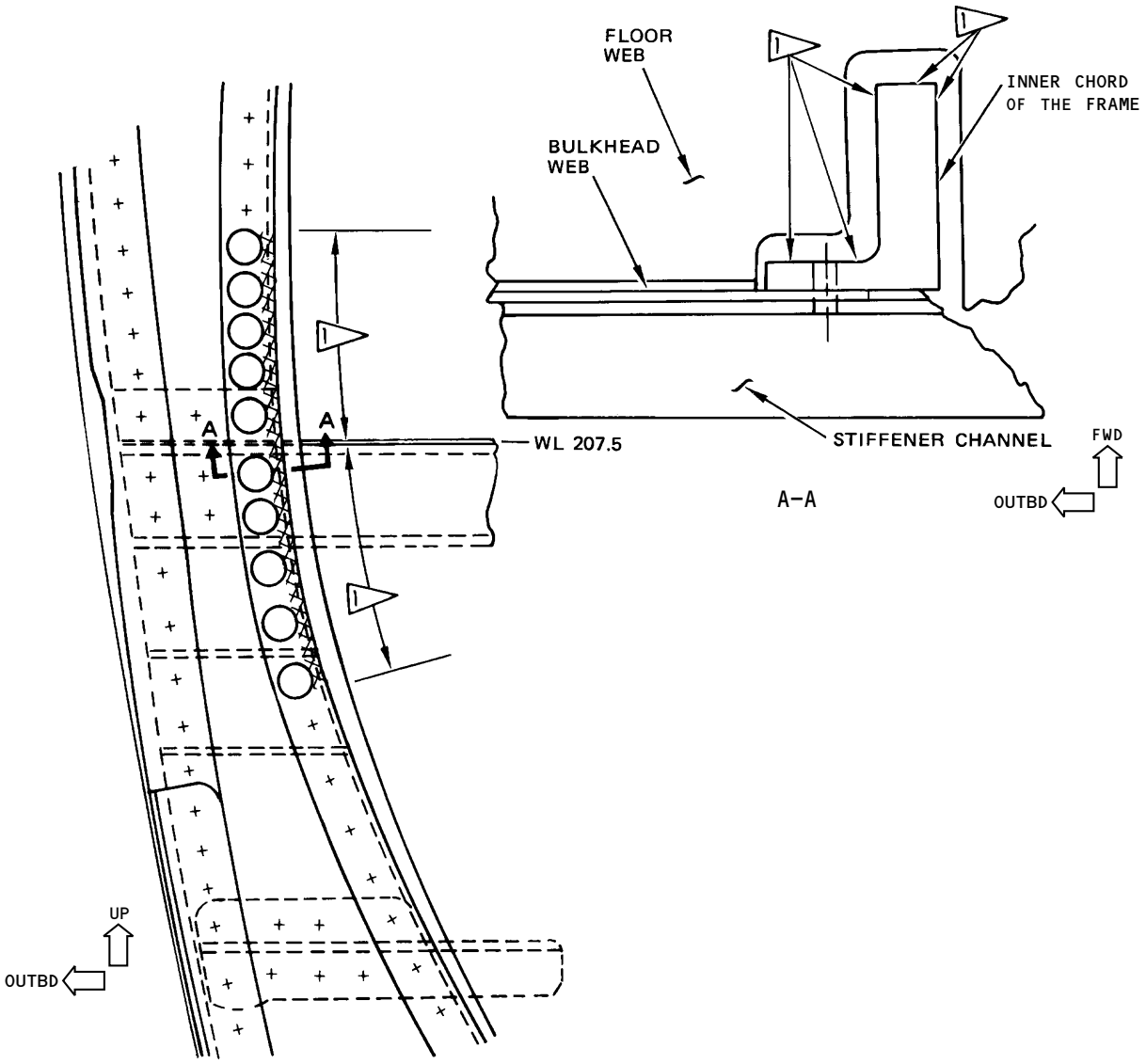

NOTES:

- THE RIGHT SIDE IS SHOWN; THE LEFT SIDE IS ALMOST THE SAME

◯ INSPECTION FASTENERS

XXXX INSPECTION AREA FOR THE RADIUS OF THE INNER CHORD

1 FROM THE COCKPIT AND/OR THE LOWER COMPARTMENT, DO A SCAN ALONG THE EDGES OF THE INNER CHORD OF THE FRAME 5.0 INCHES (127 MM) ABOVE AND BELOW THE COCKPIT FLOOR AT WL 207.5. THE SCAN CAN BE DONE ON ALL EDGE SURFACES THAT YOU CAN GET ACCESS TO AS LONG AS THE SCAN IS CONTINUOUS OR THE SCANS OVERLAP.

2159103 S0000471764_V1

Fuselage Inner Chord at Cockpit Floor, BS 227.8, WL 207.5
Figure 1

BOEING PROPRIETARY - Copyright © Unpublished Work - See title page for details

PART 6 - EDDY CURRENT

BULKHEAD CHORD AND SPLICE ANGLE AT BS 540, STRINGERS S-20 THRU S-26 (HFEC)

1. Purpose

A. Use this procedure to do a surface eddy current inspection to find cracks in the BS 540 bulkhead chord and splice angle. The inspection areas are between stringers S-20 and S-26 on the left and right sides of the airplane. See Figure 1 for the inspection areas.

B. This procedure uses an instrument with an impedance plane display or a meter display.

C. 737 Supplemental Structural Inspection Document (D6-37089) Reference:

(1) Item: F-25

2. Equipment

A. General

(1) Use inspection equipment that can be calibrated on the reference standard as specified in Paragraph 4.

(2) Refer to Part 1, 51-01-00, for data about the equipment manufacturers.

B. Instrument, Probes and Reference Standard

(1) Refer to Part 6, 51-00-00, Procedure 4, for the instrument, probe and reference standard data if a meter display instrument is used or Part 6, 51-00-00, Procedure 23, if an impedance plane display instrument is used.

3. Prepare for the Inspection

A. Get access to the inspection areas from the access panels in the BS 520 bulkhead at the aft end of the forward cargo compartment.

B. Identify all the inspection areas. See Figure 1.

C. Clean the inspection area.

(1) Remove sealant as necessary.

(2) Remove paint only if it is loose.

4. Instrument Calibration

A. Refer to Part 6, 51-00-00, Procedure 4, for the calibration instructions if a meter display instrument is used or Part 6, 51-00-00, Procedure 23, if an impedance plane display instrument is used.

5. Inspection Procedure

A. Calibrate the instrument as specified in Paragraph 4.

B. Examine the bulkhead chord and splice angle for cracks in the inspection areas identified in Figure 1. Refer to the inspection instructions in Part 6, 51-00-00, Procedure 4, if a meter display instrument is used or Part 6, 51-00-00, Procedure 23, if an impedance plane display instrument is used.

6. Inspection Results

A. Refer to the applicable inspection procedure for data to help make an analysis of the inspection results.

BOEING PROPRIETARY - Copyright © Unpublished Work - See title page for details

2159107 S0000471766_V1

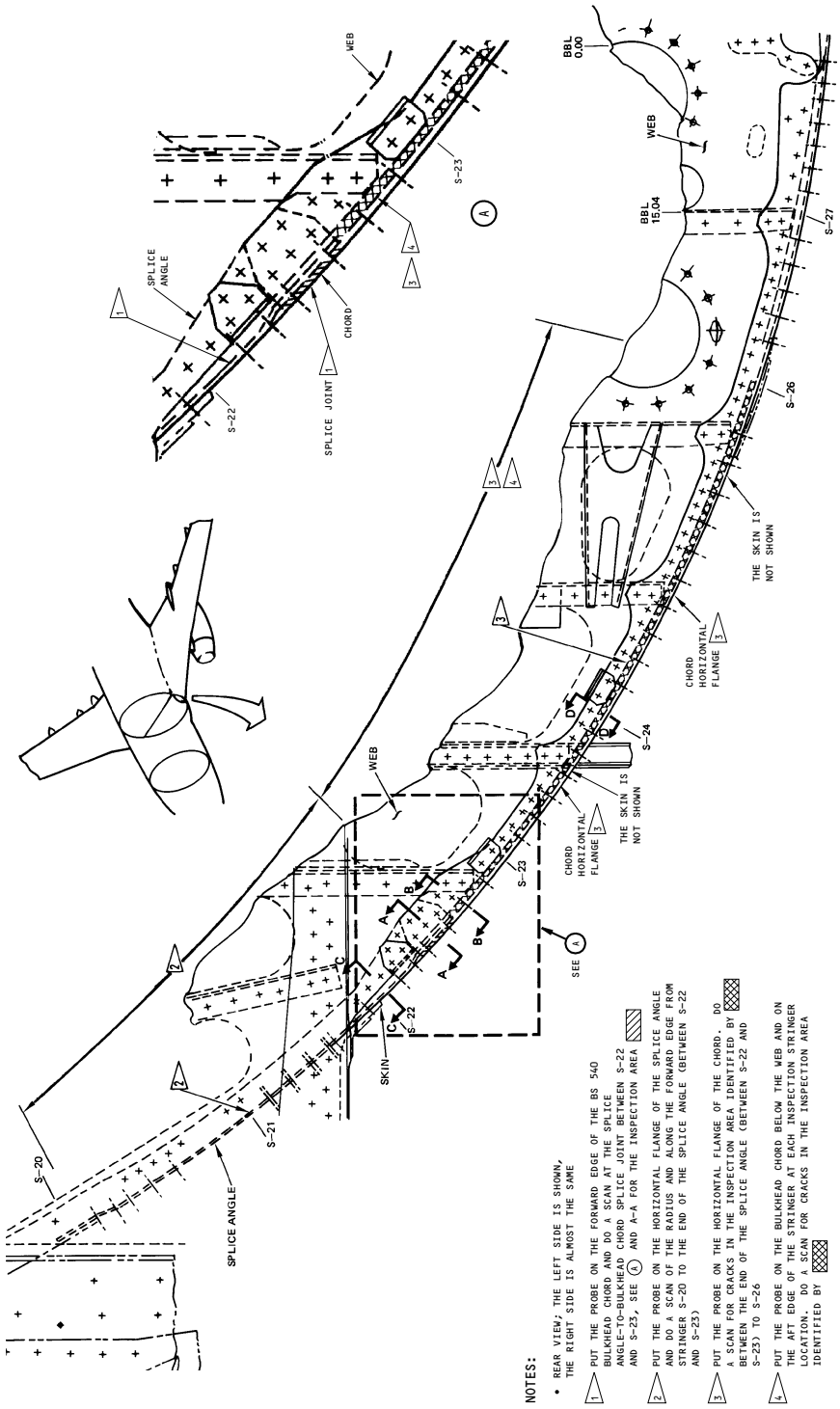

Bulkhead Chord and Splice Angle
Figure 1 (Sheet 1 of 2)

BOEING PROPRIETARY - Copyright © Unpublished Work - See title page for details

2159109 S0000471767_V1

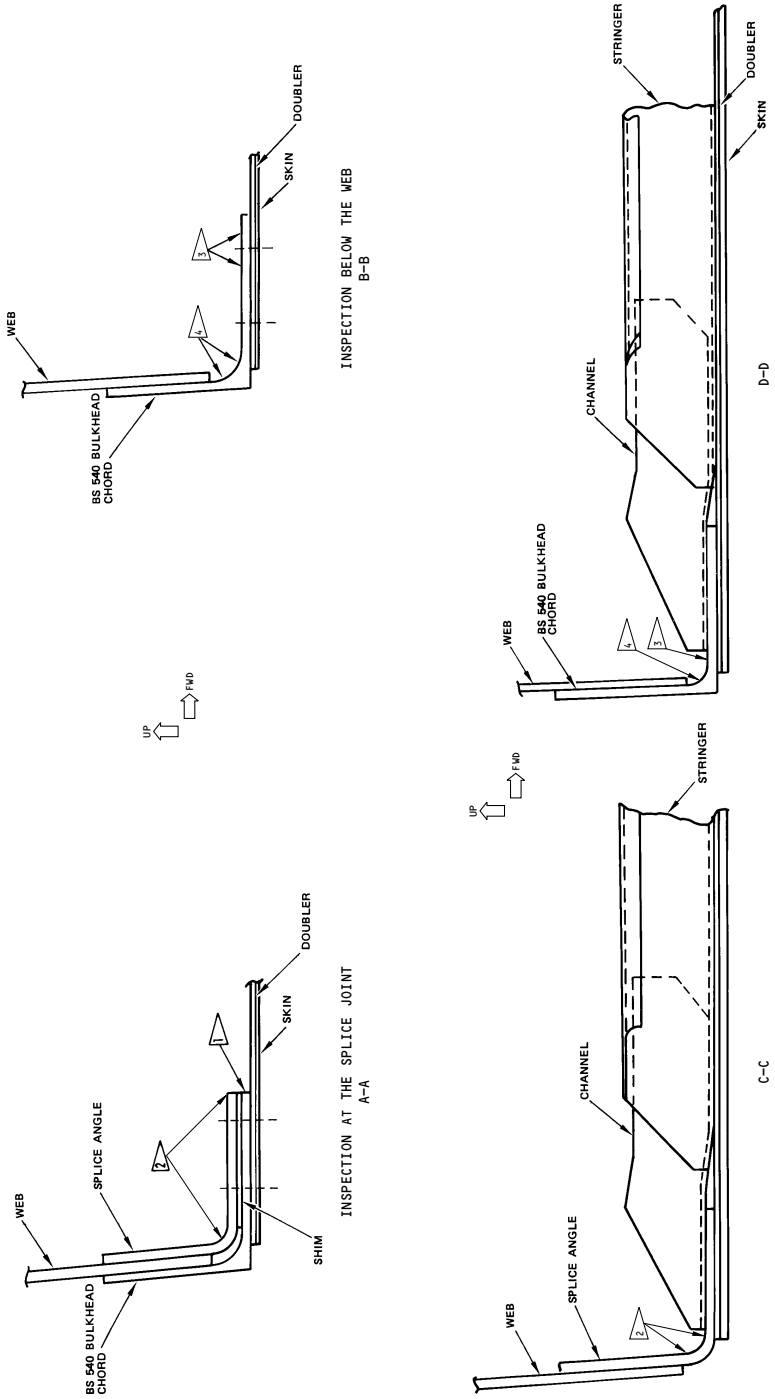

Bulkhead Chord and Splice Angle
Figure 1 (Sheet 2 of 2)

BOEING PROPRIETARY - Copyright © Unpublished Work - See title page for details

PART 6 - EDDY CURRENT

BULKHEAD PRIMARY AND FAILSAFE CHORDS, HORIZONTAL AND VERTICAL FLANGES - BS 259.5 AT WL 192.5 (HFEC)

1. Purpose

A. Use this high frequency eddy current procedure to examine the horizontal and/or vertical flanges of the primary and failsafe chords at WL 192.5 of the fuselage bulkhead at Body Station 259.5.

B. This procedure uses an instrument with an impedance plane display or a meter display.

C. 737 Supplemental Structural Inspection Document (D6-37089) Reference:

(1) Item: F-23

2. Equipment

A. General

(1) Use inspection equipment that can be calibrated on the reference standard as specified in Paragraph 4.

(2) Refer to Part 1, 51-01-00, for data about the equipment manufacturers.

B. Instrument, Probe and Reference Standard

(1) Refer to Part 6, 51-00-00, Procedure 4, if a meter display instrument is used and Part 6, 51-00-00, Procedure 23, if an impedance plane display instrument is used.

(2) Use a shielded, right angle, pencil probe that has a maximum diameter of 0.125 inch (3.17 mm) as specified in Part 6, 51-00-00, Procedure 4.

3. Prepare for the Inspection

A. Remove the panel that is around the nose landing gear periscope that is on the floor between the cabin and the cockpit.

B. Remove the insulation blanket from the velcro and remove it from the inspection area.

C. Remove the velcro strip on the BS 294.5 vertical web, from LBL 20.0 to RBL 20.0.

D. Clean the surfaces to be examined.

4. Instrument Calibration

A. Refer to Part 6, 51-00-00, Procedure 4, for the calibration instructions if a meter display instrument is used or Part 6, 51-00-00, Procedure 23, if an impedance plane display instrument is used.

5. Inspection Procedure

A. Examine the primary and failsafe chords for cracks as specified in Part 6, 51-00-00, Procedure 4, or Part 6, 51-00-00, Procedure 23.

(1) Figure 1 identifies the inspection areas, probe locations and scan patterns.

6. Inspection Results

A. Refer to the applicable inspection procedure for data to help make an analysis of the inspection results.

BOEING PROPRIETARY - Copyright © Unpublished Work - See title page for details

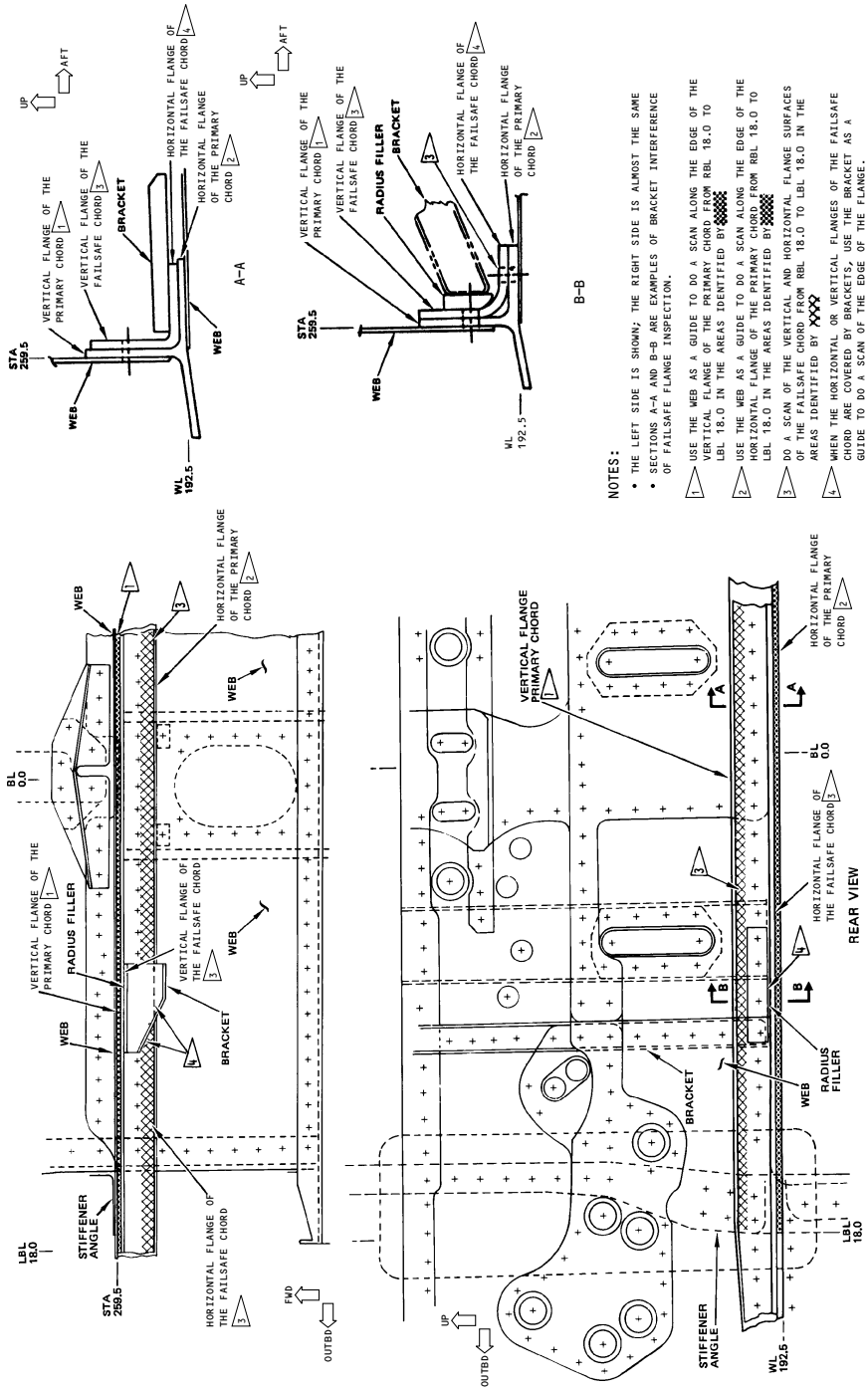

2159112 S0000471770_V1

Bulkhead Primary and Failsafe Chords, Horizontal and Vertical Flanges - BS 259.5 at WL 192.5
Figure 1

BOEING PROPRIETARY - Copyright © Unpublished Work - See title page for details

PART 6 - EDDY CURRENT

FORWARD GALLEY DOOR CUTOUT (HFEC)

1. Purpose

A. Use this procedure to do a surface eddy current inspection to find cracks in the frames, sills, and reinforcing strap of the forward galley door cutout at BS 291.5 and BS 332.1. The inspection is done at the inner and outer chords where the frame web is not visible and at frame/sill intersections.

B. This procedure uses an instrument with an impedance plane display or a meter display.

C. 737 Supplemental Structural Inspection Document (D6-37089 for -100/-200 airplanes; D6-82669 for -300/-400/-500 airplanes) Reference:

(1) Item: F-15A

(2) Item: F-15B

2. Equipment

A. General

(1) Use inspection equipment that can be calibrated on the reference standard as specified in Paragraph 4.

(2) Refer to Part 1, 51-01-00, for data about the equipment manufacturers.

B. Instrument

(1) Use an eddy current instrument that:

(a) Can be calibrated as specified in this procedure.

(b) Operates at a frequency between 50 kHz and 300 kHz.

C. Probes

(1) Use a high frequency pencil probe as shown in Part 6, 51-00-00, Procedure 4, Figure 1. The probe that follows was used to help prepare this procedure.

(a) MTF902-50B; NDT Engineering Corp.

D. Reference Standard

(1) Use reference standard 126 to do a calibration for this inspection. Refer to Part 6, 51-00-00, Procedure 4, Figure 4 or Part 6, 51-00-00, Procedure 23, Figure 4.

3. Prepare for the Inspection

A. Identify all the inspection areas. See Figure 1.

B. Remove galleys, trim panels, thresholds, and insulation blankets to get access to the inspection areas.

C. Clean the inspection area and remove sealant as necessary. Remove paint only if it is loose.

4. Instrument Calibration

A. Calibrate the instrument as specified in Part 6, 51-00-00, Procedure 4, paragraph 5, (if a meter display instrument is used) or Part 6, 51-00-00, Procedure 23, paragraph 5 (if an impedance plane display instrument is used).

5. Inspection Procedure

A. Calibrate the instrument as specified in Paragraph 4.

BOEING PROPRIETARY - Copyright © Unpublished Work - See title page for details

B. Examine the areas identified in Figure 1.

(1) For instruments with a meter display, refer to Part 6, 51-00-00, Procedure 4, paragraph 6, for the inspection procedure.

(2) For instruments with an impedance plane display, refer to Part 6, 51-00-00, Procedure 23, paragraph 6, for the inspection procedure.

6. Inspection Results

A. To make an analysis of the indications that occurred during the inspection, refer to Part 6, 51-00-00, Procedure 4, paragraph 7 (if a meter display instrument is used) or Part 6, 51-00-00, Procedure 23, paragraph 7 (if an impedance plane display instrument is used).

BOEING PROPRIETARY - Copyright © Unpublished Work - See title page for details

2159113 S0000471772_V1

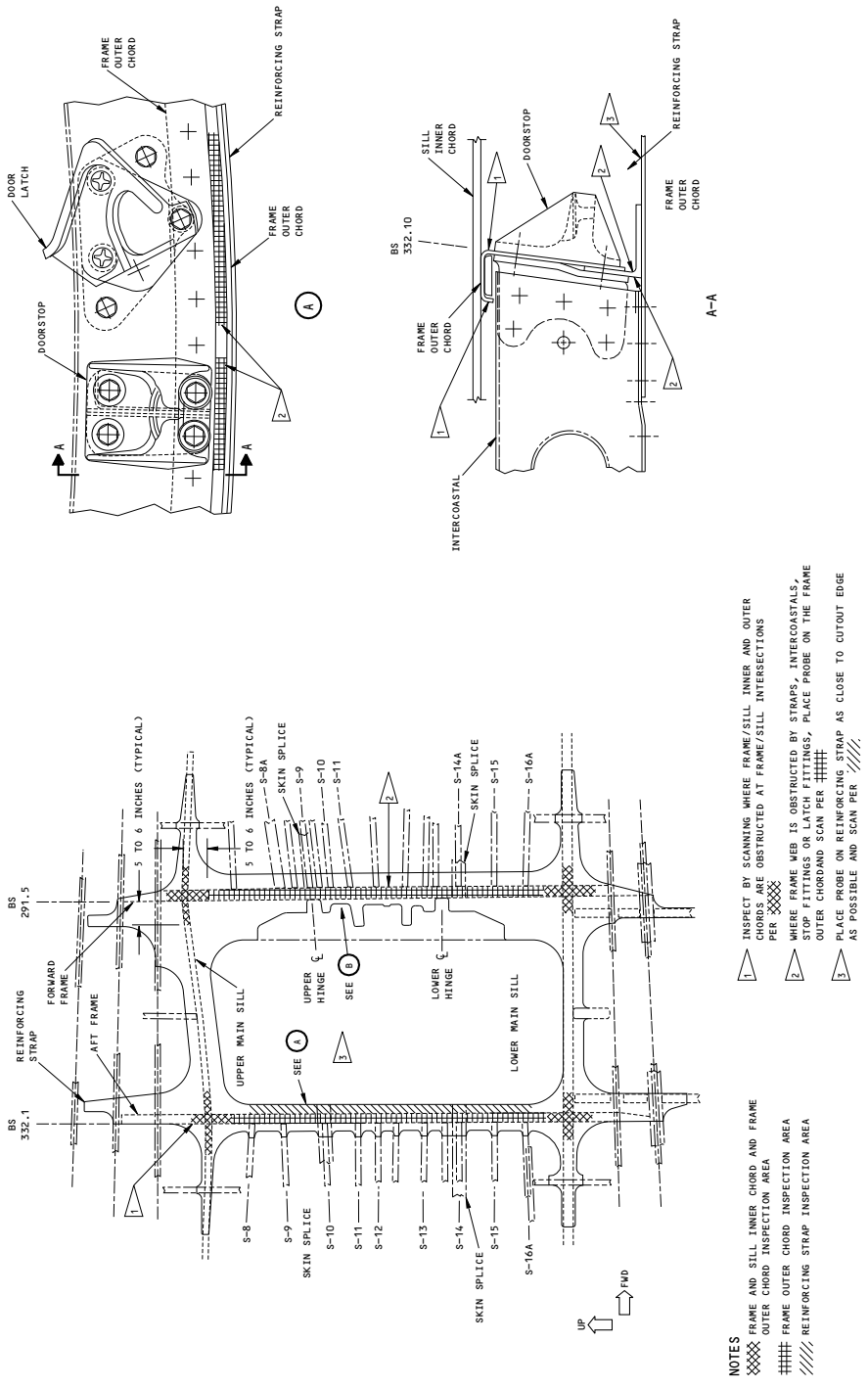

Forward Galley Door Cutout
Figure 1 (Sheet 1 of 2)

BOEING PROPRIETARY - Copyright © Unpublished Work - See title page for details

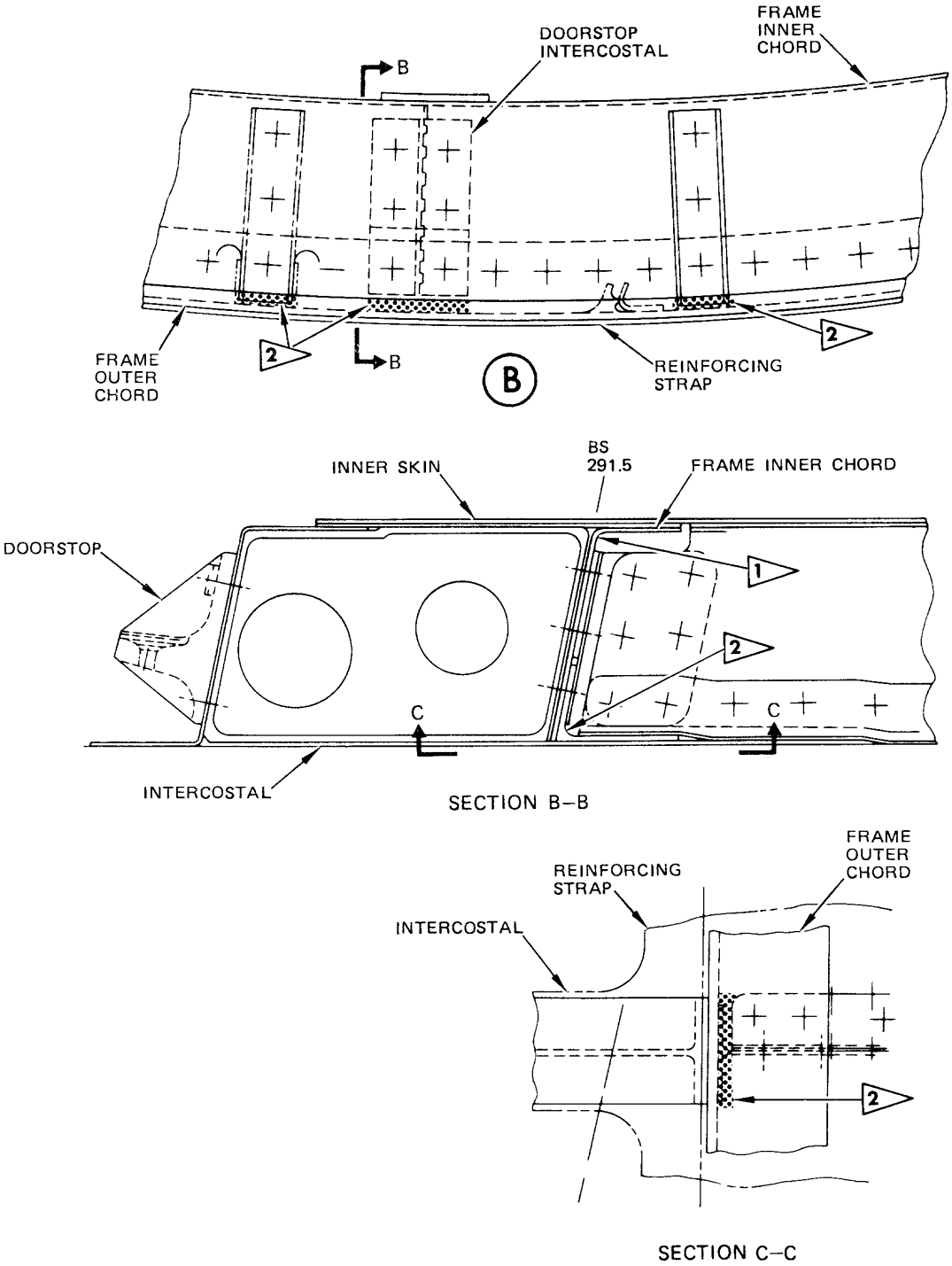

2159114 S0000471773_V1

Forward Galley Door Cutout
Figure 1 (Sheet 2 of 2)

BOEING PROPRIETARY - Copyright © Unpublished Work - See title page for details

PART 6 - EDDY CURRENT

FRAME INNER AND OUTER CHORD FLANGES AT AFT GALLEY DOOR CUTOUT (HFEC)

1. Purpose

A. To detect cracks in the frame inner chord flanges at frame-to-sill intersections of the aft galley door cutout and on the frame outer chord flanges, at locations where frame web is obscured to visual inspection, using high frequency eddy current.

B. 737 Supplemental Structural Inspection Document (D6-37089) Reference:

(1) Item: F-16

2. Equipment

A. Any eddy current instrument and probe combination that satisfies the performance requirements of this procedure is suitable for this inspection. The following equipment was used in the development of this procedure.

(1) Instrument - ED520; Magnaflux Corp. - Refer to Part 6, 51-00-00, Procedure 4.

(2) Probe - Shielded, right angle pencil probe per Part 6, 51-00-00, Procedure 4, with the following dimensions: A = 0.03 inch (0.08 cm), B = 0.16 inch (0.41 cm), C = 5.0 inch (12.7 cm)

(a) P/N MP 9003-50B; NDT Product Engineering

(3) Reference Standard - Refer to Part 6, 51-00-00, Procedure 4.

NOTE: Refer to Part 1, 51-01-00, for information on equipment manufacturers.

3. Prepare for the Inspection

A. Remove the aft galley seats, interior panels, and sufficient insulation to obtain access to the areas of interest. See Figure 1.

B. Clean surfaces at inspection area. See Figure 1.

4. Instrument Calibration

A. Refer to Part 6, 51-00-00, Procedure 4.

5. Inspection Procedure

A. Inspect per Figure 1.

B. Perform inspection scans per Part 6, 51-00-00, Procedure 4.

6. Inspection Results

A. A rapid meter movement occurring as probe is moved over a short distance is a potential crack indication and further investigation is required.

B. Refer to Part 6, 51-00-00, Procedure 4.

BOEING PROPRIETARY - Copyright © Unpublished Work - See title page for details

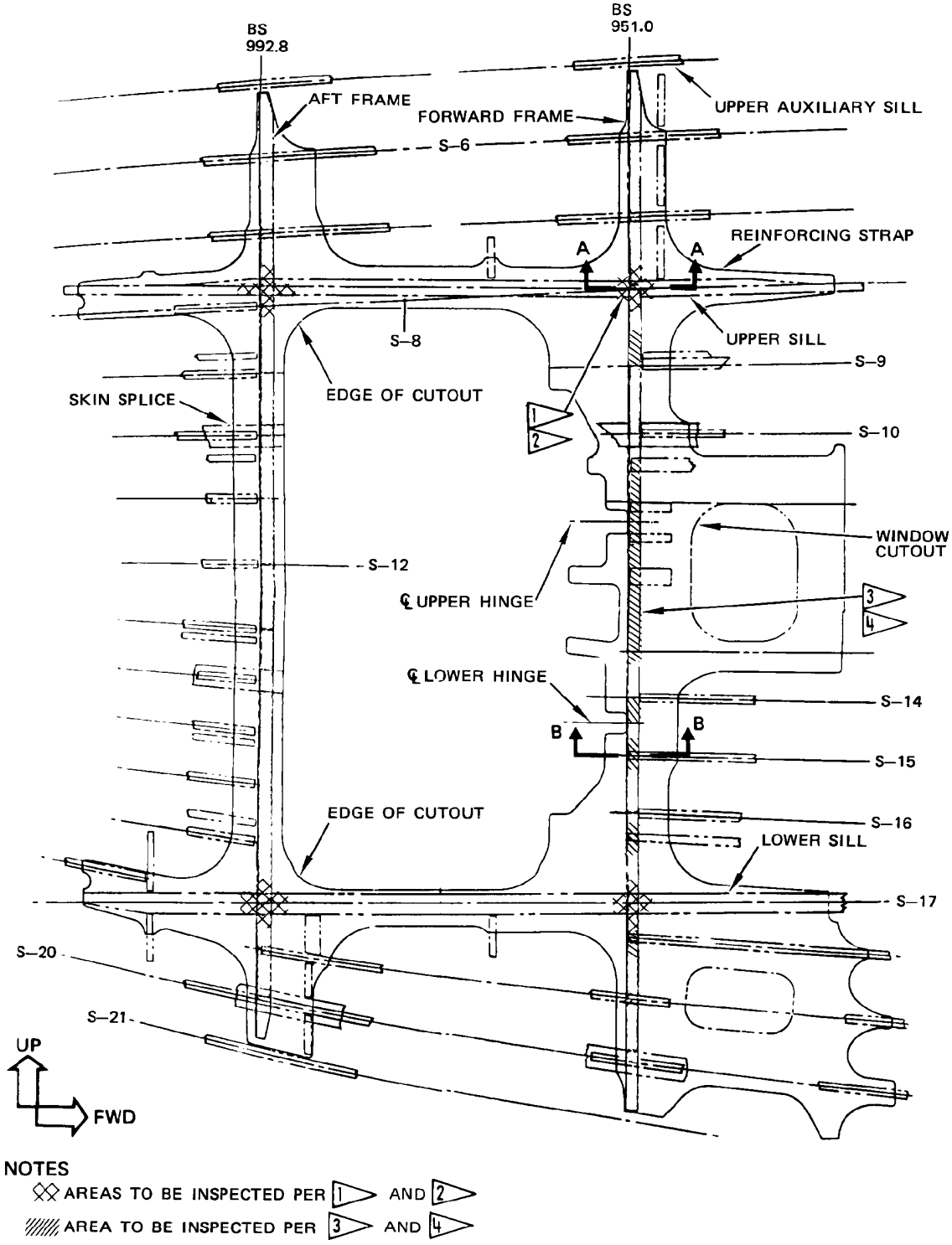

2159116 S0000471775_V1

Frame Inner and Outer Chords at Aft Galley Door Cutout
Figure 1 (Sheet 1 of 2)

BOEING PROPRIETARY - Copyright © Unpublished Work - See title page for details

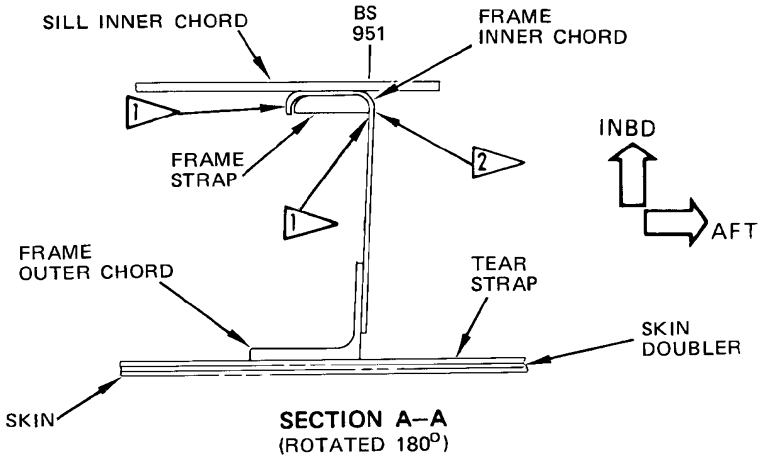

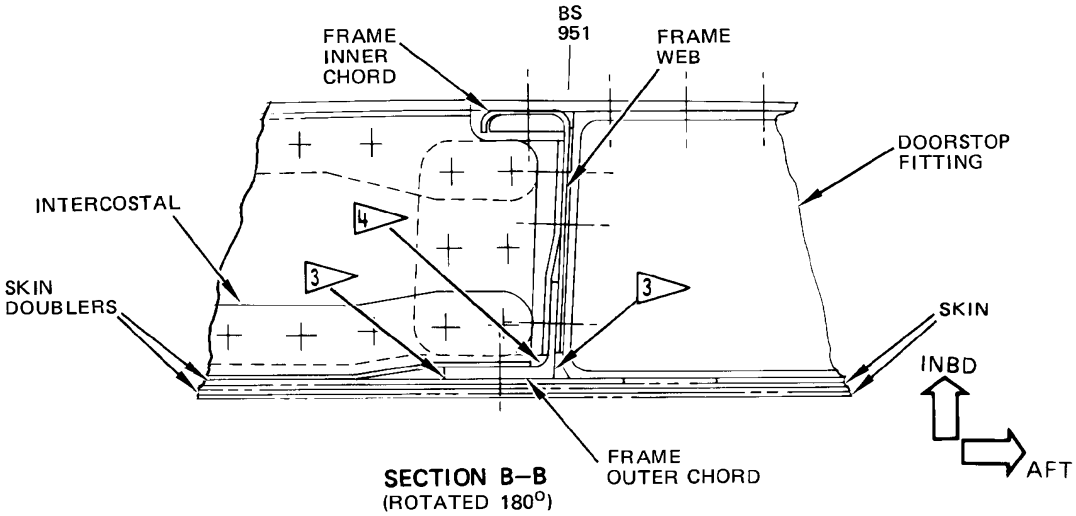

NOTES

1. PLACE PROBE ON THE INNER CHORD ADJACENT TO FRAME STRAP AT FRAME/SILL INTERSECTION AND SCAN PORTION OF CHORD COVERED BY SILL STRAP PER ⊠

2. WHERE INSPECTION PER FLAGNOTE 1 CANNOT BE PERFORMED ADJACENT TO FRAME STRAP BECAUSE OF INTERFERING STRUCTURE, PLACE PROBE ON OPPOSITE SIDE OF CHORD ON FLANGE RADIUS AND SCAN FOR LENGTH OF INTERFERENCE

3. PLACE PROBE ON FRAME OUTER CHORD HEEL AND TOE AND SCAN WHERE FRAME IS OBSTRUCTED PER ////

4. WHERE INSPECTION PER FLAGNOTE 3 CANNOT BE PERFORMED PLACE PROBE IN RADIUS OF CHORD FLANGE JUNCTURE AND SCAN FOR LENGTH OF OBSTRUCTION

NOTE: WHERE NEITHER INSPECTION PER FLAGNOTE 3 NOR FLAGNOTE 4 CAN BE ACCOMPLISHED, INSPECT ALL SUCH FASTENER LOCATIONS PER SEPARATE LOW FREQUENCY EDDY CURRENT PROCEDURE, REF. PART 6, 53–10–40

2159117 S0000471776_V1

Frame Inner and Outer Chords at Aft Galley Door Cutout
Figure 1 (Sheet 2 of 2)

BOEING PROPRIETARY - Copyright © Unpublished Work - See title page for details

PART 6 - EDDY CURRENT

AFT ENTRY DOOR CUTOUT - WITH AND WITHOUT AIRSTAIRS (HFEC)

1. **Purpose**

   A. To detect cracks in the frames and sills of the aft entry door cutout at BS 947.5 to BS 992.8 (with airstairs) and BS 951 to BS 992.8 (without airstairs) using high frequency eddy current.

   B. To detect cracks in the reinforcing strap of the aft entry door cutout adjacent to the forward frame at specified locations using high frequency eddy current.

   C. 737 Supplemental Structural Inspection Document (D6-37089) Reference:

      (1) Item: F-17

      (2) Item: F-18

2. **Equipment**

   A. Any eddy current instrument and probe combination that satisfies the performance requirements of this procedure is suitable for this inspection. The following equipment was used in the development of this procedure.

      NOTE: Refer to Part 1, 51-01-00, for information on equipment manufacturers.

      (1) Instrument - ED520; Magnaflux, Corp. - Refer to Part 6, 51-00-00, Procedure 4.

      (2) Probe - Shielded, right-angle pencil probe per Part 6, 51-00-00, Procedure 4, with the following dimensions:

         (a) A = 0.03 inch (0.076 cm), B = 0.150 inch (0.38 cm), C = 5.0 inches (12.7 cm).

         (b) P/N MP 9003-50FX; NDT Product Engineering

   B. Reference Standard - Refer to Part 6, 51-00-00, Procedure 4.

3. **Prepare for the Inspection**

   A. Remove seats, interior panels, threshold, divider partition, aft lavatory and insulation sufficient to obtain access to the areas of interest. See Figure 1.

   B. Access to bottom half of lower frame-to-sill intersection is from lower aft cargo compartment.

4. **Instrument Calibration**

   A. Refer to Part 6, 51-00-00, Procedure 4.

5. **Inspection Procedure**

   A. Inspect frames and sills per flagnotes 1, 2, and 3 of Figure 1 (SSID Items F-17B and F-18B).

      NOTE: Where frame web interferes with scanning in frame outer chord radius, scan as close as possible to radius area.

   B. Inspect reinforcing strap per flagnote 4 of Figure 1 (SSID Items F-17A and F-18A).

      NOTE: Where sealant bead interferes with scanning along frame edge, scan as close as possible to frame edge.

   C. Perform inspection scans per Part 6, 51-00-00, Procedure 4.

BOEING PROPRIETARY - Copyright © Unpublished Work - See title page for details

6. **Inspection Results**

A. A rapid meter movement occurring as probe is moved over a short distance is a potential crack indication and further investigation is required.

B. Refer to Part 6, 51-00-00, Procedure 4.

BOEING PROPRIETARY - Copyright © Unpublished Work - See title page for details

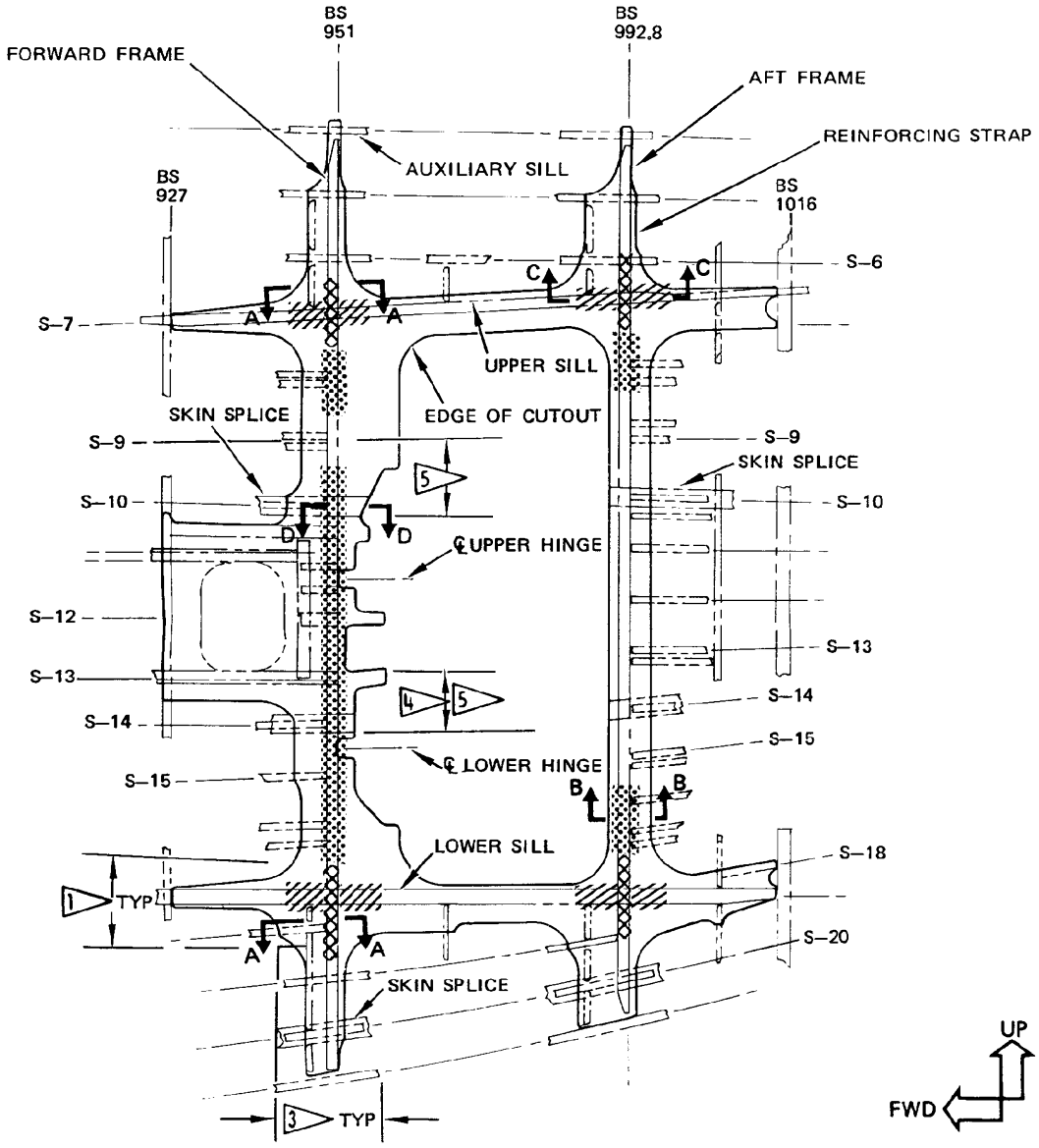

AFT ENTRY DOOR CUTOUT WITHOUT AIRSTAIRS

NOTES

- VIEW FROM EXTERIOR
- AREAS TO BE INSPECTED PER 1
- AREAS TO BE INSPECTED PER 2
- AREAS TO BE INSPECTED PER 3
- 4 PLACE PROBE ON REINFORCING STRAP AND SCAN BETWEEN STRINGERS S–9 AND S–10 AND BETWEEN STRINGERS S–13 AND S–14 USING BOTH SIDES OF FORWARD FRAME OUTER CHORD AS A GUIDE EXCEPT AS NOTED PER 5
- 5 FOR AIRPLANES WITHOUT AIRSTAIRS, INSPECTION BETWEEN STRINGERS S–13 AND S–14 CAN ONLY BE PERFORMED FROM FORWARD SIDE OF FRAME

2159120 S0000471779_V1

Aft Entry Door Cutout with and without Airstairs
Figure 1 (Sheet 1 of 3)

BOEING PROPRIETARY - Copyright © Unpublished Work - See title page for details

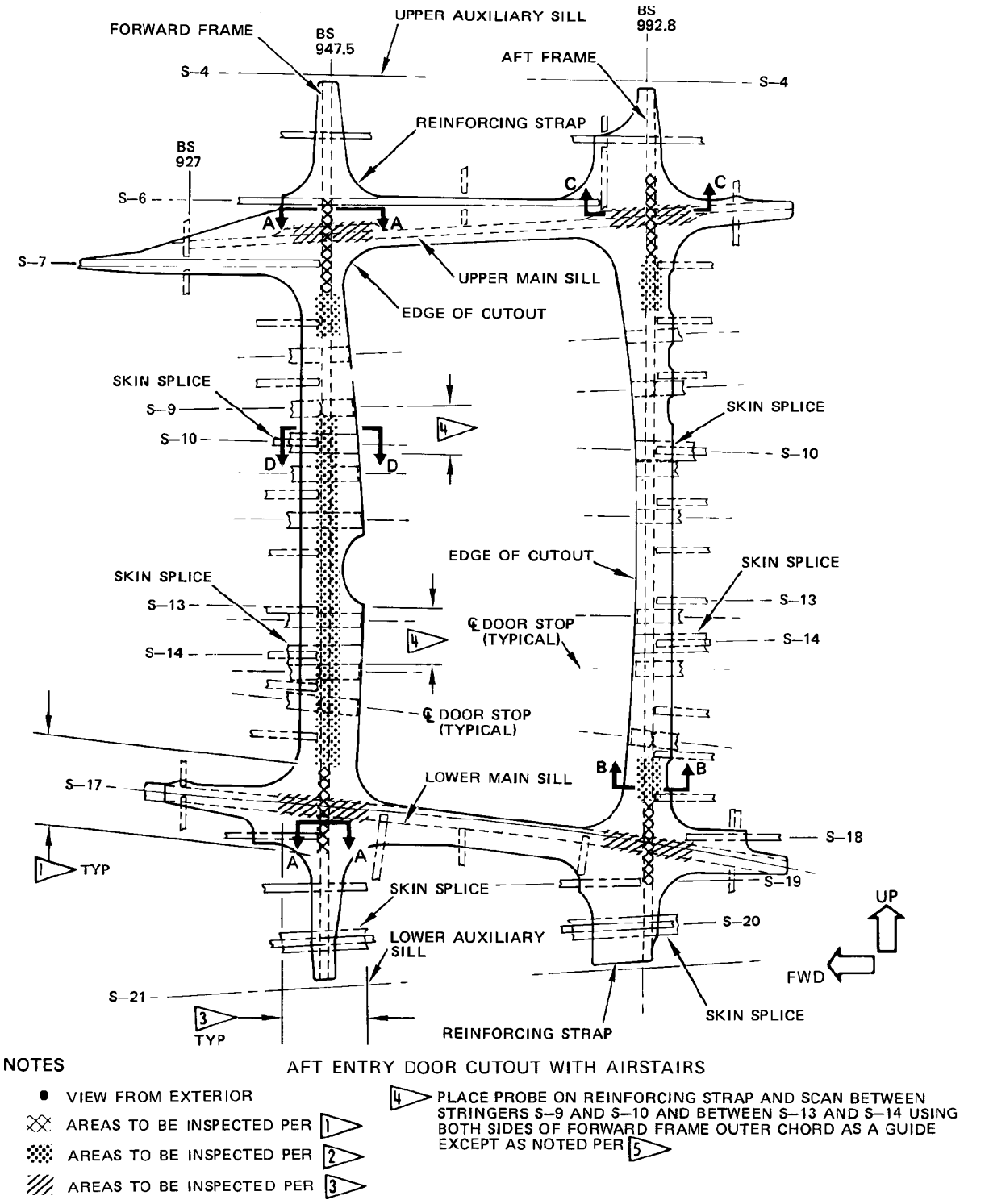

NOTES

- ● VIEW FROM EXTERIOR
- AREAS TO BE INSPECTED PER 1
- AREAS TO BE INSPECTED PER 2
- AREAS TO BE INSPECTED PER 3
- 4 PLACE PROBE ON REINFORCING STRAP AND SCAN BETWEEN STRINGERS S–9 AND S–10 AND BETWEEN S–13 AND S–14 USING BOTH SIDES OF FORWARD FRAME OUTER CHORD AS A GUIDE EXCEPT AS NOTED PER 5

AFT ENTRY DOOR CUTOUT WITH AIRSTAIRS

2159122 S0000471780_V1

Aft Entry Door Cutout with and without Airstairs
Figure 1 (Sheet 2 of 3)

BOEING PROPRIETARY - Copyright © Unpublished Work - See title page for details

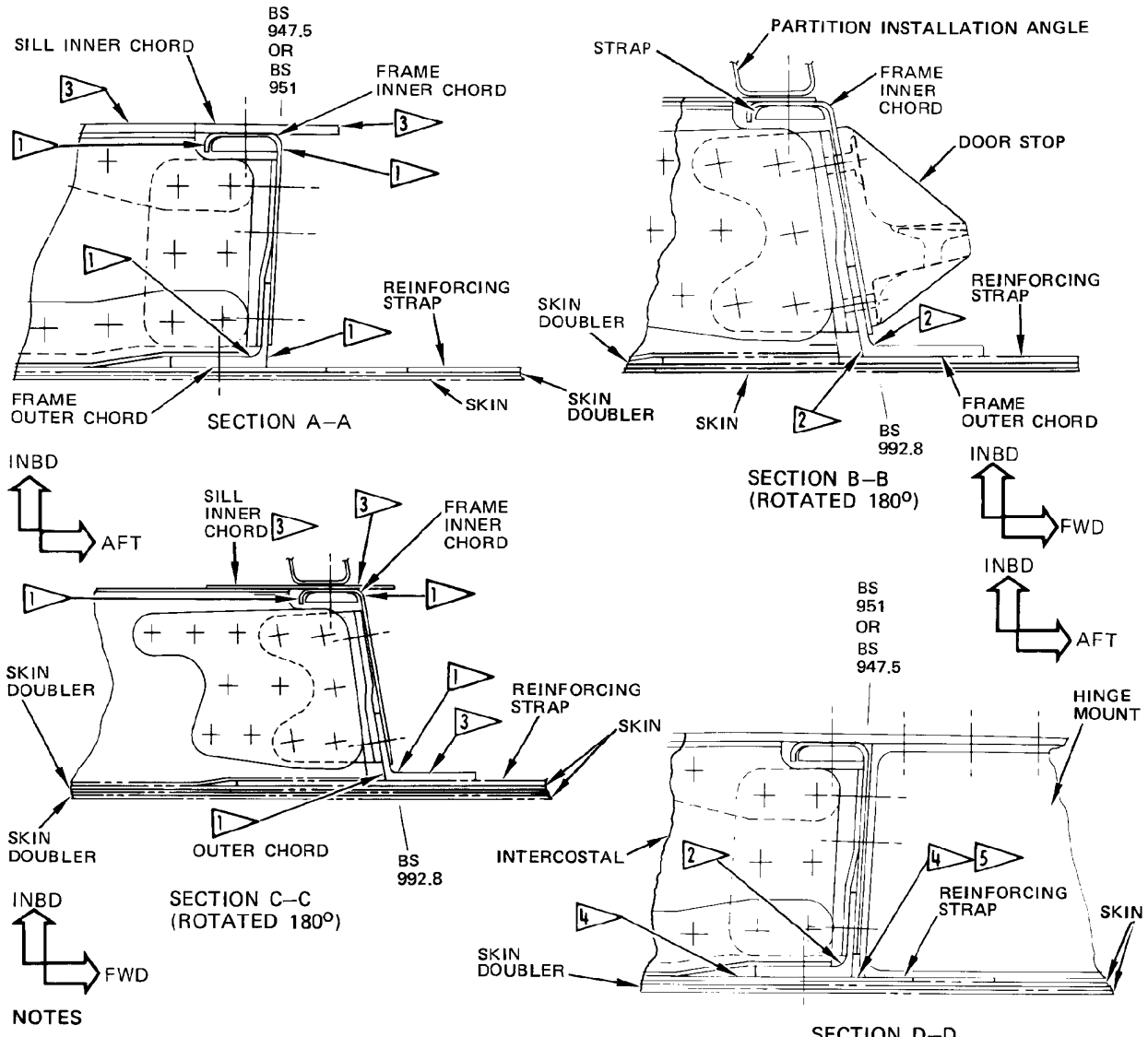

NOTES

1. PLACE PROBE ON FRAME INNER AND OUTER CHORDS AND SCAN 5.5 ± 0.5 INCHES ABOVE AND BELOW FRAME/SILL INTERSECTION PER XXXXX
2. PLACE PROBE ON FRAME OUTER CHORD, WHERE FRAME WEB IS OBSTRUCTED BY STRAPS, INTERCOSTALS, STOP AND LATCH FITTINGS AND SCAN PER
3. PLACE PROBE ON SILL INNER AND OUTER CHORDS AND SCAN 5.5 ± 0.5 INCHES EACH SIDE OF FRAME PER
4. PLACE PROBE ON REINFORCING STRAP AND SCAN BETWEEN STRINGERS S–9 AND S–10 AND BETWEEN STRINGERS S–13 AND S–14 USING BOTH SIDES OF FORWARD FRAME OUTER CHORD AS A GUIDE EXCEPT AS NOTED PER 5
5. FOR AIRPLANES WITHOUT AIRSTAIRS, INSPECTION BETWEEN STRINGERS S–13 AND S–14 CAN ONLY BE PERFORMED FROM FORWARD SIDE OF FRAME

2159125 S0000471781_V1

Aft Entry Door Cutout with and without Airstairs
Figure 1 (Sheet 3 of 3)

BOEING PROPRIETARY - Copyright © Unpublished Work - See title page for details

PART 6 - EDDY CURRENT

AFT ENTRY DOOR CUTOUT - WITH AND WITHOUT AIRSTAIRS (HFEC)

1. **Procedure Deleted**

   A. This procedure was deleted and is superseded by information in Part 6, 53-10-10.

BOEING PROPRIETARY - Copyright © Unpublished Work - See title page for details

PART 6 - EDDY CURRENT

AFT ENTRY DOOR CUTOUT WITH AND WITHOUT AIRSTAIRS (LFEC)

1. Purpose

A. To detect cracks in skin, doubler, straps, and frame outer chord of aft entry door cutouts at BS 947.5 and BS 992.8 (with airstairs) and BS 951.0 and BS 992.8 (without airstairs) using low frequency eddy current.

B. 737 Supplemental Structural Inspection Document (D6-37089) Reference:

(1) Item: F-17

(2) Item: F-18

2. Equipment

NOTE: Refer to Part 1, 51-01-00, for information on equipment manufacturers.

A. Instrument -- Any eddy current instrument that satisfies the performance requirements of this procedure is suitable for this inspection. The following equipment was used in development of this procedure.

(1) MIZ-10 or MIZ-10A; Zetec Inc.

B. Probes -- This procedure uses two probes. Any probes of similar size that satisfies performance requirements of this procedure are acceptable. The following probes were used in development of this procedure:

(1) Spot probe with 0.35-inch (0.87 cm) OD case, usable at 1.5 kHz, P/N SPO 1391; Nortec, Inc.

(2) Ring probe with 0.30-inch (0.76 cm) ID, 0.75-inch (1.90 cm) OD, shielded, usable at 400 Hz to 2.0 kHz, P/N SPO-996; Nortec Inc.

NOTE: Refer to Part 1, 51-06-00, for a general description of low frequency probe configurations.

C. Reference Standards - Manufacture Reference Standard 353A thru 353D per Figure 2 and Figure 4.

3. Prepare for the Inspection

A. Remove door cutout threshold.

B. Clean inspection surface and remove loose paint.

4. Instrument Calibration

A. Calibrate for fastener hole cracks using ring probe centered on the fastener (Inspection Codes A thru H).

(1) Set instrument frequency and select reference standard per Figure 1.

(2) Visually center probe over unnotched reference standard hole, (see Figure 3, Position 1) and manipulate until minimum meter reading is obtained.

(3) Balance instrument per manufacturer's instructions.

(4) Adjust liftoff control per manufacturer's instructions to obtain the same response when probe is on bare standard as when probe is lifted off part by 0.006 inch (approximately the thickness of two sheets of paper).

NOTE: Probe is visually centered over unnotched hole during liftoff calibration.

BOEING PROPRIETARY - Copyright © Unpublished Work - See title page for details

(5) Recenter probe over unnotched hole and manipulate probe, adjusting balance as necessary, until a minimum meter reading is obtained. Adjust meter response to read 20 percent of full scale with meter position control.

(6) Center probe over the notched reference standard hole (see Figure 3, Position 2). Response should be upscale.

(7) Adjust instrument sensitivity to obtain 70 percent of full scale meter response, or 50 percent of full scale meter response difference between notched and unnotched locations (Positions 1 and 2).

(8) Recheck null and liftoff. If readjustments are made, recheck sensitivity per Paragraph 4.A.(6) and Paragraph 4.A.(7).

(9) Cracks will be indicated by an upscale meter response.

B. Calibrate for tear strap cutout edge crack inspection using low frequency spot probe.

(1) Connect probe and set instrument frequency at 2.0 kHz.

(2) Place probe at Position 1 on Reference Standard 353D per Figure 5.

(3) Balance instrument per manufacturer's instructions.

(4) Adjust liftoff control per manufacturer's instructions to obtain the same response when the probe is on bare standard as when probe is lifted off part by 0.006 inch (approximately the thickness of two sheets of paper).

NOTE: The probe is located at Position 1 during liftoff calibration.

NOTE: Probe-to-fastener head spacing established during balance and liftoff calibration must be maintained for the remainder of the calibration procedure.

(5) Keep probe at Position 1 and use meter position control to adjust meter response to indicate 20 percent of full scale.

(6) Position or scan probe over notched portion of reference standard (see Figure 5, Position 2). Meter response should be upscale.

(7) Adjust instrument sensitivity to obtain 70 percent of full scale meter response, or 50 percent of full scale meter response difference between notched and unnotched locations (Positions 1 and 2).

(8) Reposition probe at Position 1 and recheck balance and liftoff. If readjustments are made, recheck sensitivity per Paragraph 4.B.(6) and Paragraph 4.B.(7).

5. Inspection Procedure

NOTE: It is suggested that a copy of Figure 6 or Figure 7 be made and used to record instrument responses at each location.

A. Inspect fastener holes for cracks using ring probe centered on fastener (see Figure 6 or Figure 7, Inspection Codes A thru H).

(1) Calibrate instrument per Paragraph 4.A.

(2) Establish baseline response for particular inspection code.

(a) Use a minimum of two inspection fasteners to establish baseline response for an acceptable fastener.

(b) Select a representative location from this group and set its response to 20 percent of full meter scale.

NOTE: Do not change instrument sensitivity when establishing the baseline response.

BOEING PROPRIETARY - Copyright © Unpublished Work - See title page for details

(c) Refer back to this location periodically to ensure that instrument response is the same as originally recorded.

NOTE: A meter response change may occur from instrument drift or probe temperature change.

(3) Inspect each fastener, of same code, by visually centering probe on fastener and manipulating probe about visual center to obtain minimum meter response.

B. Inspect tear strap cutout edge for cracks using low frequency eddy current spot probe (see Figure 6 or Figure 7).

(1) Calibrate instrument per Paragraph 4.B.

(2) Determine baseline response.

(a) Establish baseline response for an acceptable crack free area by comparing a minimum of two locations within the inspection area.

(b) Select a representative location from this group and set its response to 20 percent full scale on meter.

NOTE: Do not change instrument sensitivity when establishing the baseline response.

(c) Refer back to this location periodically to ensure that instrument response is the same as originally recorded.

NOTE: A meter response change may occur from instrument drift or probe temperature change.

(3) Inspect slowly, maintaining a constant edge margin when scanning, per Figure 6 or Figure 7.

6. Inspection Results

A. Any location which gives a meter deflection 30 percent of full scale above the baseline response, whether it occurs with a stationary or scanning probe, is a potential crack which requires further investigation.

(1) The following conditions may cause meter reading changes similar to crack indications.

(a) A decrease in fastener spacing - Compare with similarly spaced fasteners on airplane or on reference standard.

(b) Placing probe too close to edge of skin or subsurface structure - Check drawings (see Figure 6 or Figure 7) and compare with a similar location on airplane.

(c) Difference in conductivity between skin panels - Compare only inspection locations common to the same skin panel(s).

(d) Placing or scanning probe too close to a magnetic steel fastener - Compare response obtained with probe near a similar fastener, or by scanning the probe around fastener at a constant distance away from it.

(e) Magnetic metal chips in paint - Remove paint and inspect.

(f) Difference in fastener material (magnetic versus non-magnetic) - confirm by using a permanent magnet to determine the magnetic properties of the fasteners. If fastener material is different, complete recalibration is required. Remove and replace fasteners in reference standard with the same type of fastener as found in the aircraft and recalibrate. Contact the Boeing Commercial Airplane Company for further instructions.

(2) When investigating crack-like indications - Compare meter response obtained at same location on opposite side of airplane or at same location on another airplane of same configuration.

BOEING PROPRIETARY - Copyright © Unpublished Work - See title page for details

B. A downscale (lower) meter reading is an indication of metal thickening which indicates probe is over a beam chord or stiffener flange.

BOEING PROPRIETARY - Copyright © Unpublished Work - See title page for details

FASTENER CODE	REFERENCE STANDARD	INSTRUMENT FREQUENCY	PROBE P/N
A	353A	400 Hz	SPO 996
B	353A	400 Hz	SPO 996
D	353B	500 Hz	SPO 996
E	353B	500 Hz	SPO 996
F	353B	500 Hz	SPO 996
G	353B	500 Hz	SPO 996
H [1]	353C	2.0 kHz	SPO 996
- [2]	353D	2.0 kHz	SPO 1391

NOTE

[1] FRAME OUTER CHORD INSPECTION NOT REQUIRED AT THESE LOCATIONS. INSPECTION WILL DETECT CRACKS IN SKIN, DOUBLER AND TEAR STRAP ONLY.

[2] TEAR STRAP CUTOUT EDGE INSPECTION USING SPOT PROBE, SEE FIGURE 6 OR 7 FOR INSPECTION LOCATION.

2159126 S0000471786_V2

Calibration Table
Figure 1

BOEING PROPRIETARY - Copyright © Unpublished Work - See title page for details

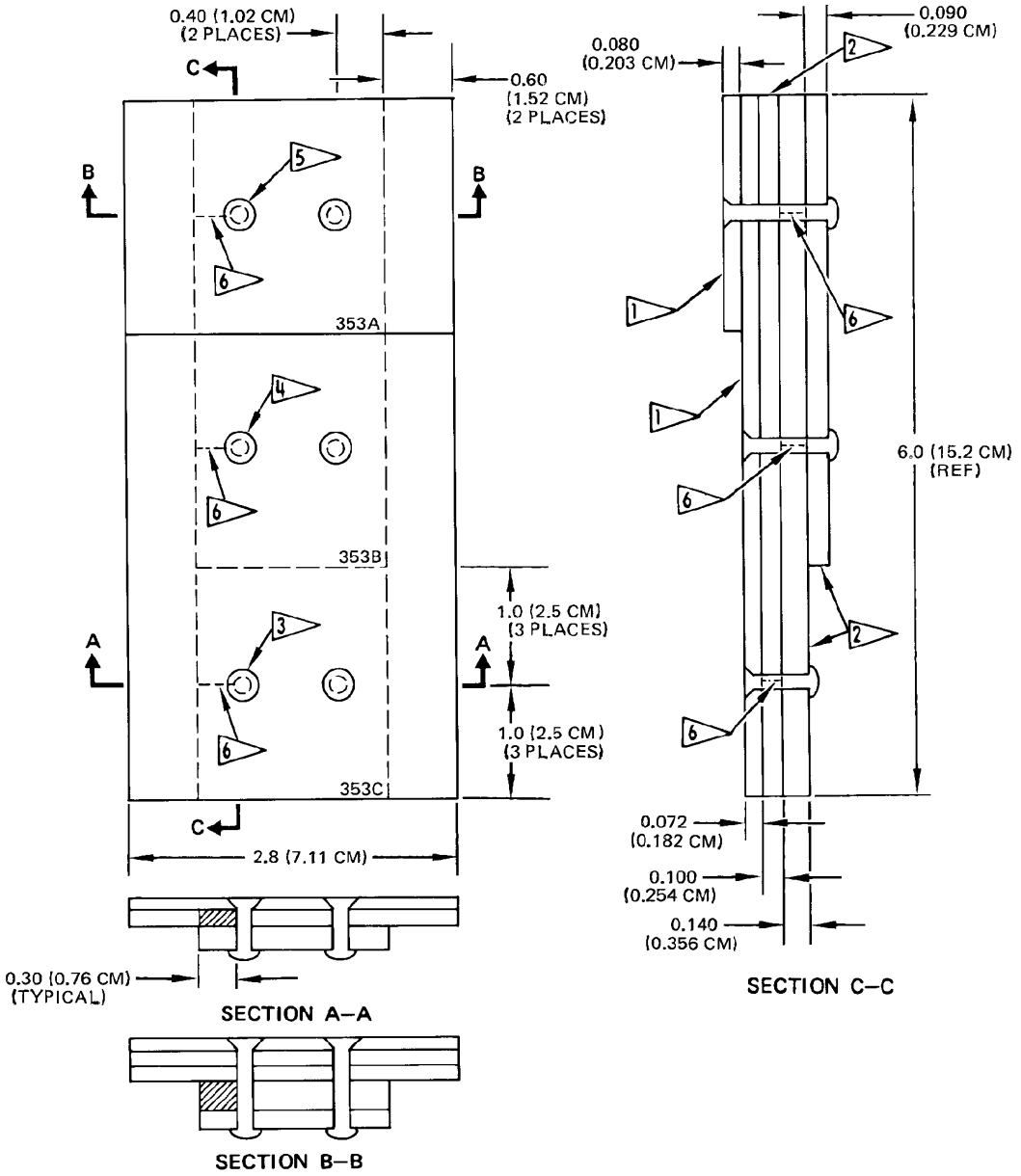

NOTES

- ALL DIMENSIONS ARE IN INCHES (CENTIMETERS IN PARENTHESES)
- TOLERANCE: X.X ± 0.05 (0.13 CM), X.XX ± 0.02 (0.05 CM), X.XXX ± 0.005 (0.013 CM)
- STEEL STAMP WITH 353A, 353B AND 353C

1 MATERIAL: 2024–T3 CLAD ALUMINUM

2 MATERIAL: 2024–T42 BARE ALUMINUM

3 FASTENERS: BACB30GY6A6 BOLT WITH BACC30K6 COLLAR (2 PLACES)

4 FASTENERS: BACB30GY6A7 BOLT WITH BACC30K6 COLLAR (2 PLACES)

5 FASTENERS: BACB30GY6A8 BOLT WITH BACC30K6 COLLAR (2 PLACES)

6 JEWELER'S SAWCUT 0.030 (0.076 CM) MAXIMUM WIDTH

2159127 S0000471787_V1

Reference Standard 353A, 353B and 353C
Figure 2

BOEING PROPRIETARY - Copyright © Unpublished Work - See title page for details

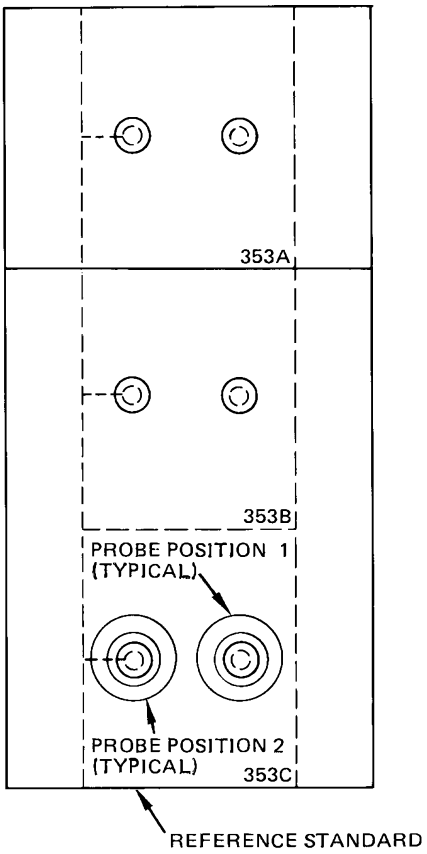

NOTE

- PROBE POSITIONS FOR REFERENCE STANDARD 353C SHOWN, PROBE POSITION FOR REFERENCE STANDARD 353A AND 353B SIMILAR

2159129 S0000471788_V1

Probe Calibration Positions on Reference Standard 353A, 353B and 353C
Figure 3

BOEING PROPRIETARY - Copyright © Unpublished Work - See title page for details

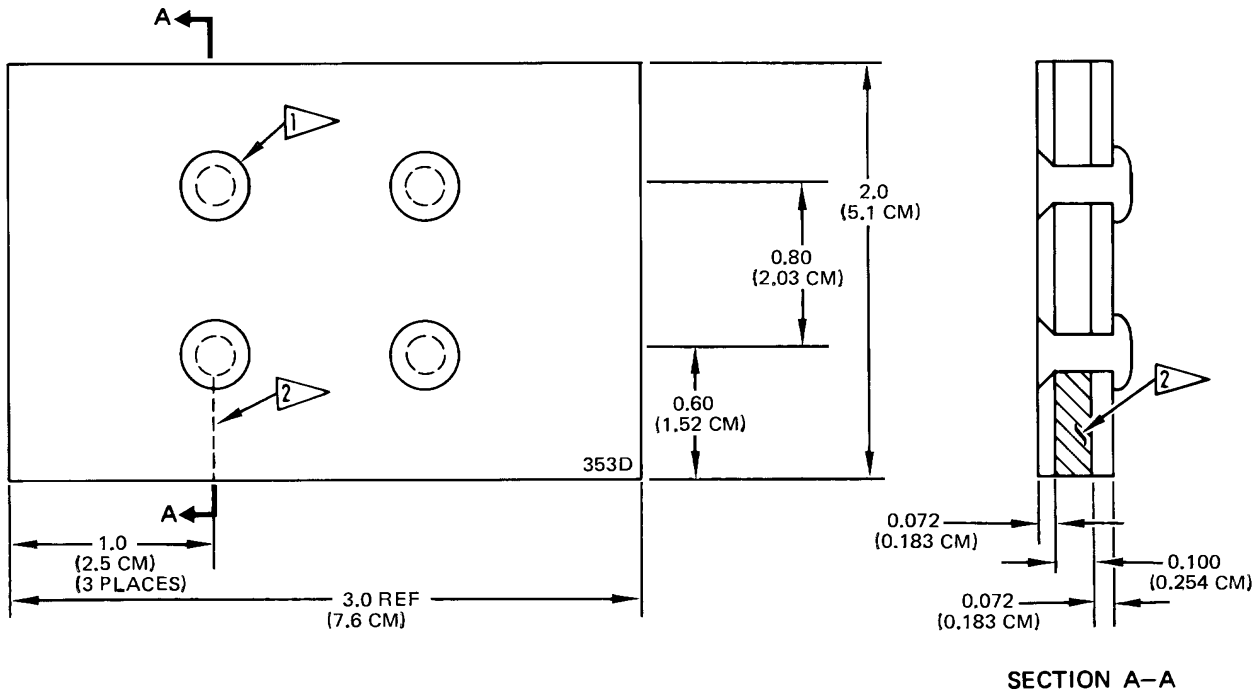

NOTES

- ALL DIMENSIONS ARE IN INCHES (CENTIMETERS IN PARENTHESES)
- TOLERANCE: X.X ± 0.05 (0.13 CM)
  X.XX ± 0.02 (0.05 CM)
  X.XXX ± 0.005 (0.013 CM)
- MATERIAL: 2024–T3 OR –T4 ALUMINUM
- STEEL STAMP WITH 353D

1 BACR15CE6D7 RIVET (4 PLACES)

2 JEWELER'S SAWCUT 0.030 (0.076 CM) MAXIMUM WIDTH

2159132 S0000471789_V1

Reference Standard 353D
Figure 4

BOEING PROPRIETARY - Copyright © Unpublished Work - See title page for details

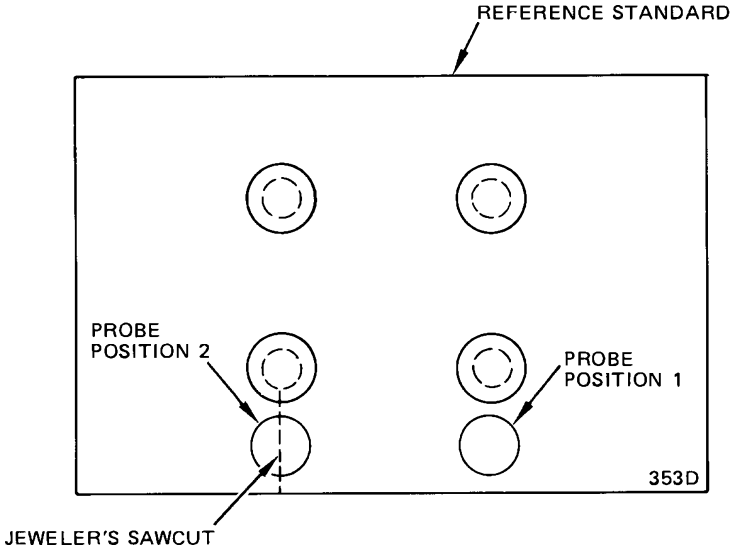

2159133 S0000471791_V1

Probe Calibration Positions on Reference Standard 353D
Figure 5

BOEING PROPRIETARY - Copyright © Unpublished Work - See title page for details

2159134 S0000471792_V1

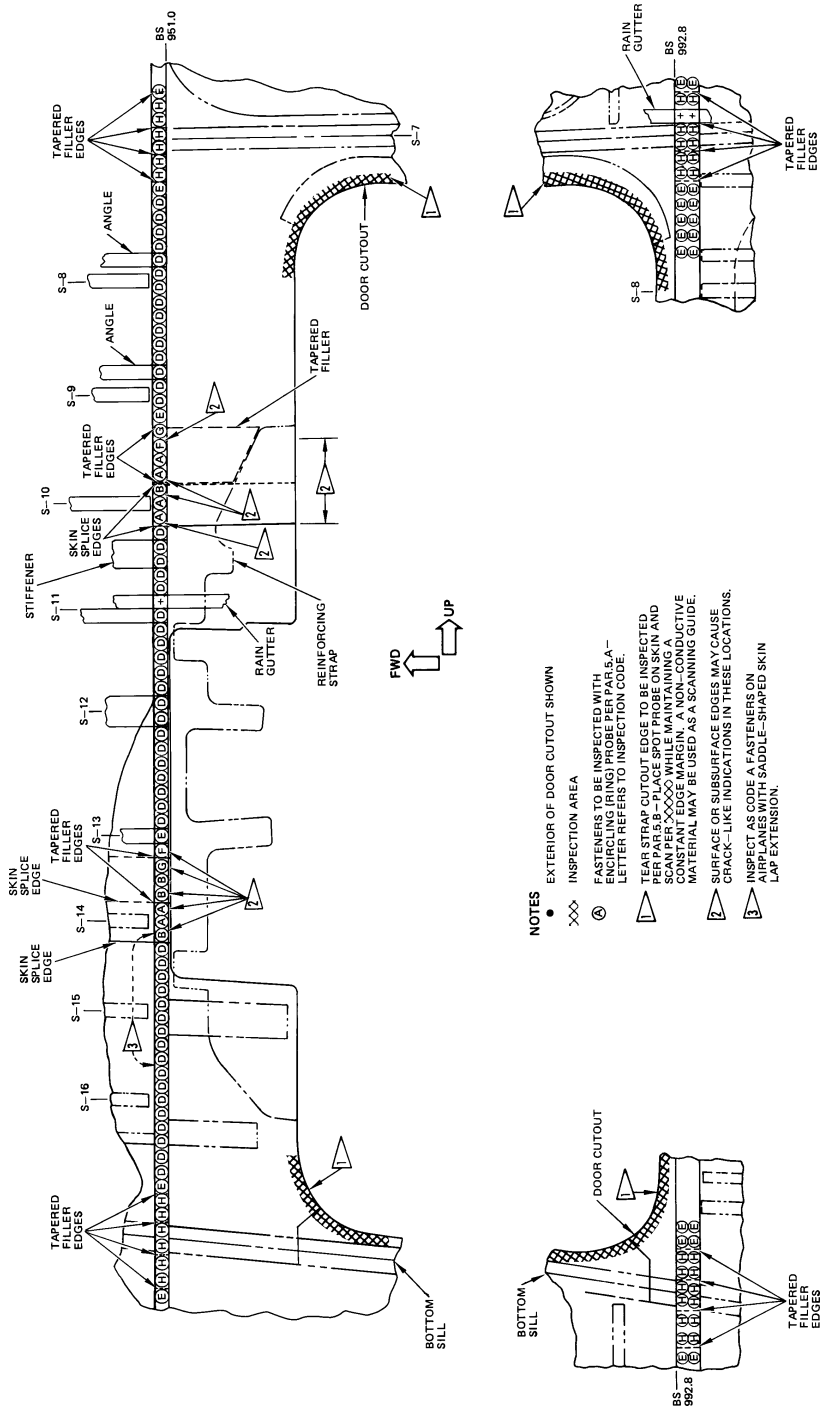

Aft Entry Door Cutout Without Airstairs BS 951.0 and BS 992.8
Figure 6

BOEING PROPRIETARY - Copyright © Unpublished Work - See title page for details

2159135 S0000471793_V1

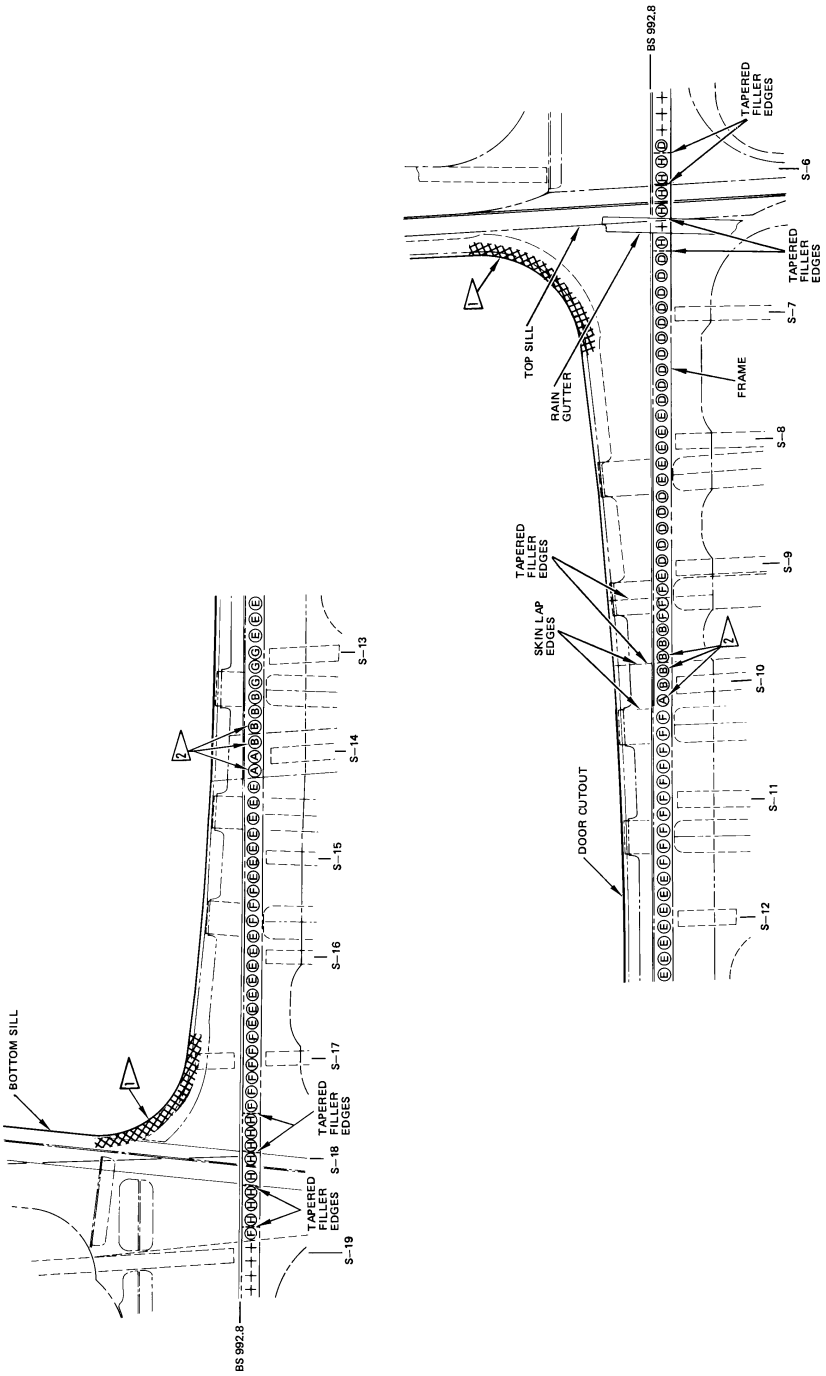

Aft Entry Door Cutout With Airstairs BS 947.5 and BS 992.8
Figure 7 (Sheet 1 of 2)

BOEING PROPRIETARY - Copyright © Unpublished Work - See title page for details

2159137 S0000471794_V1

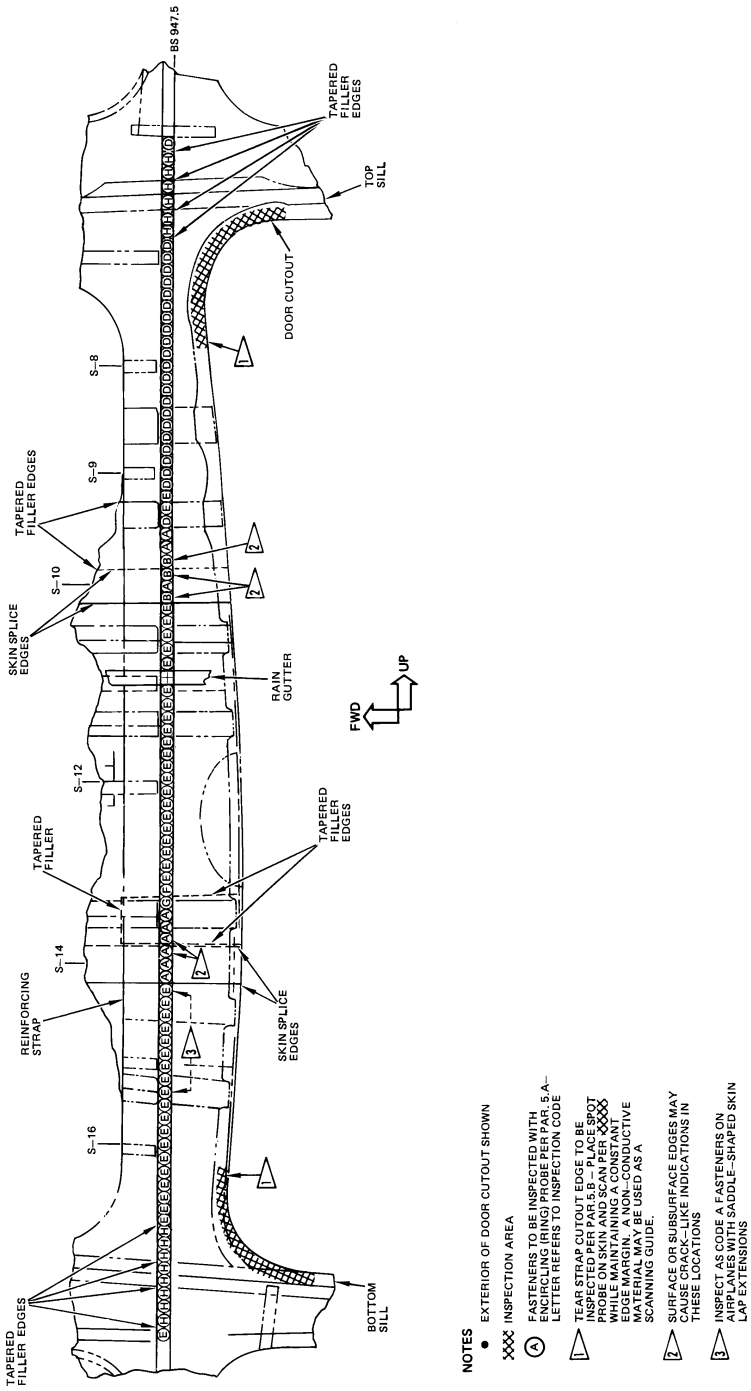

Aft Entry Door Cutout With Airstairs BS 947.5 and BS 992.8
Figure 7 (Sheet 2 of 2)

BOEING PROPRIETARY - Copyright © Unpublished Work - See title page for details

PART 6 - EDDY CURRENT

AFT GALLEY DOOR CUTOUT TEAR STRAP (LFEC)

1. Purpose

A. To detect cracks in designated areas of the skin, doublers, straps and frame outer chords of the aft galley door, BS 951.0 and BS 992.8, using low frequency eddy current.

B. 737 Supplemental Structural Inspection Document (D6-37089) Reference:

(1) Item: F-16

2. Equipment

NOTE: Refer to Part 1, 51-01-00, for information on equipment manufacturers.

A. Instrument -- Any eddy current instrument that satisfies the performance requirements of this procedure is suitable for this inspection. The following equipment was used in development of this procedure:

(1) MIZ-10 or MIZ-10A; Zetec Inc.

B. Probes -- This procedure uses two probes. Any probes of similar size that satisfy the performance requirements of this procedure are acceptable. The following probes were used in the development of this procedure:

(1) Spot probe with 0.35-inch (0.87 cm) OD case, usable at 1.5 kHz, P/N SPO 1391; Nortec, Inc.

(2) Ring probe with 0.30-inch (0.76 cm) ID, 0.75-inch (1.90 cm) OD, shielded, usable at 400 Hz to 2.0 kHz, P/N SPO 996; Nortec Inc.

NOTE: Refer to Part 1, 51-06-00, for a general description of low frequency probe configurations.

C. Reference Standards -- Manufacture Reference Standards 353A thru 353D per Figure 2 and Figure 4.

3. Preparation for the Inspection

A. Remove door cutout threshold.

B. Remove door scuff plate if present (see Figure 6).

C. Clean inspection surface and remove loose paint.

4. Instrument Calibration

A. Calibrate for fastener hole cracks using ring probe centered on the fastener. The following applies to Inspection Codes A thru F (see Figure 6).

(1) Connect ring probe to instrument. Select a reference standard and set instrument frequency per Figure 1.

(2) Visually center probe over unnotched reference standard hole (see Figure 3, Position 1) and manipulate until minimum meter response is obtained.

(3) Balance instrument per manufacturer's instructions.

(4) Adjust liftoff control per manufacturer's instructions to obtain the same response when probe is on bare standard as when probe is lifted off part by 0.006 inch (approximately the thickness of two sheets of paper).

NOTE: Probe is visually centered over unnotched hole during liftoff calibration.

BOEING PROPRIETARY - Copyright © Unpublished Work - See title page for details

(5) Recenter probe over unnotched hole and manipulate probe, adjusting balance as necessary, until a minimum meter response is obtained. Adjust meter response to read 20 percent of full scale with meter position control.

(6) Center probe over notched reference standard hole (see Figure 3, Position 2). Response should be upscale.

(7) Adjust instrument sensitivity to obtain 70 percent of full scale meter response, or 50 percent of full scale meter response difference between notched and unnotched locations (Positions 1 and 2).

(8) Reposition probe at Position 1 and check null and liftoff. If readjustments are made, recheck sensitivity per Paragraph 4.A.(6) and Paragraph 4.A.(7).

(9) Cracks will be indicated by an upscale meter response.

B. Calibrate for tear strap cutout edge crack inspection using low frequency spot probe.

(1) Connect probe and set instrument frequency at 2.0 kHz.

(2) Place probe at Position 1 on Reference Standard 353D per Figure 5.

(3) Balance instrument per manufacturer's instructions.

(4) Adjust liftoff control per manufacturer's instructions to obtain the same response when the probe is on bare standard as when probe is lifted off part by 0.006 inch (approximately the thickness of two sheets of paper).

NOTE: Probe is located at Position 1 during liftoff calibration.

NOTE: Probe-to-fastener head spacing established during balance and liftoff calibration must be maintained for the remainder of the calibration procedure.

(5) Keep probe at Position 1 and use meter position control to adjust meter response to indicate 20 percent of full scale.

(6) Position or scan probe over notched portion of reference standard (see Figure 5, Position 2). Meter response should be upscale.

(7) Adjust instrument sensitivity to obtain 70 percent of full scale meter response, or 50 percent of full scale meter response difference between notched and unnotched locations (Positions 1 and 2).

(8) Reposition probe at Position 1 and recheck balance and liftoff. If readjustments are made, recheck sensitivity per Paragraph 4.B.(6) and Paragraph 4.B.(7).

(9) Cracks will be indicated by an upscale meter response.

5. Inspection Procedure

NOTE: It is suggested that a copy of Figure 6 be made and used to record instrument responses at each location.

A. Inspect fastener holes for cracks using ring probe centered on fastener (see Figure 6), (Inspection Codes A thru F).

(1) Calibrate instrument per Paragraph 4.A.

(2) Establish baseline response for particular inspection code.

(a) Use a minimum of two inspection fasteners of same inspection code to establish airplane baseline response for an acceptable fastener.

BOEING PROPRIETARY - Copyright © Unpublished Work - See title page for details

(b) Select a representative fastener from this group and set its response to 20 percent of full meter scale.

NOTE: Do not change instrument sensitivity when establishing the baseline response.

(c) Refer back to this location periodically to ensure that instrument response is the same as originally recorded.

NOTE: Changes in meter response may occur as a result of instrument drift or probe temperature change.

(3) Inspect each fastener, of same code, by visually centering probe on fastener and manipulating probe about visual center to obtain minimum meter response.

B. Inspect tear strap cutout edge for cracks using low frequency eddy current spot probe (see Figure 6).

(1) Calibrate instrument per Paragraph 4.B.

(2) Establish baseline response for acceptable crack-free area by comparing minimum of three locations with probe placed adjacent to edge of door cutout in the inspection areas (see Figure 6).

(a) Select representative location from this group and set its response to 20 percent of full meter scale.

NOTE: Do not change instrument sensitivity when establishing the baseline response.

(b) Refer back to this location periodically to ensure that instrument response is same as originally recorded.

NOTE: Changes in meter response may occur as a result of instrument drift or probe temperature change.

(3) Inspect slowly, maintaining a constant edge margin when scanning, per Figure 6.

6. Inspection Results

A. Any location which gives a meter deflection 30 percent of full scale above the baseline response, whether it occurs with a stationary or scanning probe, is a potential crack which requires further investigation.

(1) The following conditions may cause meter reading changes similar to crack indications.

(a) Decrease in fastener spacing or edge margin - Compare with similarly spaced fasteners on airplane.

(b) Placing probe too close to edge of skin or subsurface structure - Check drawing (see Figure 6) and compare with a similar location on airplane.

(c) Difference in conductivity between skin panels - Compare only inspection locations common to the same skin panel(s).

(d) Difference in fastener material (magnetic versus nonmagnetic) - Confirm using a permanent magnet to determine magnetic properties of fasteners. If fastener material is different, complete recalibration is required. Remove and replace fasteners in reference standard with the same type of fastener as found in the aircraft and recalibrate. Contact the Boeing Commercial Airplane Company for further instructions.

(e) Placing or scanning probe too close to a magnetic steel fastener - Compare response obtained with probe near a similar fastener, or by scanning the probe around fastener at a constant distance away from it.

(2) When investigating crack-like indications - Compare meter response obtained at same location on opposite side of airplane or on another airplane of same configuration.

BOEING PROPRIETARY - Copyright © Unpublished Work - See title page for details

B. A downscale (lower) meter reading is an indication of metal thickening which indicates probe is over a beam chord or stiffener flange.

BOEING PROPRIETARY - Copyright © Unpublished Work - See title page for details

CALIBRATION TABLE			
FASTENER CODE	REFERENCE STANDARD	INSTRUMENT FREQUENCY	PROBE P/N
A	353A	400 Hz	SPO 996
B	353A	400 Hz	SPO 996
C	353A	400 Hz	SPO 996
D	353B	500 Hz	SPO 996
E	353B	500 Hz	SPO 996
F 1	353C	2.0 kHz	SPO 996
- 2	353D	2.0 kHz	SPO 1391

NOTES

1. FRAME OUTER CHORD INSPECTION NOT REQUIRED AT THESE LOCATIONS. INSPECTION WILL DETECT CRACKS IN SKIN, DOUBLER AND TEAR STRAP ONLY.

2. TEAR STRAP CUTOUT EDGE INSPECTION USING SPOT PROBE. SEE FIGURE 6 FOR INSPECTION LOCATION.

2159140 S0000471808_V2

Calibration Table
Figure 1

BOEING PROPRIETARY - Copyright © Unpublished Work - See title page for details

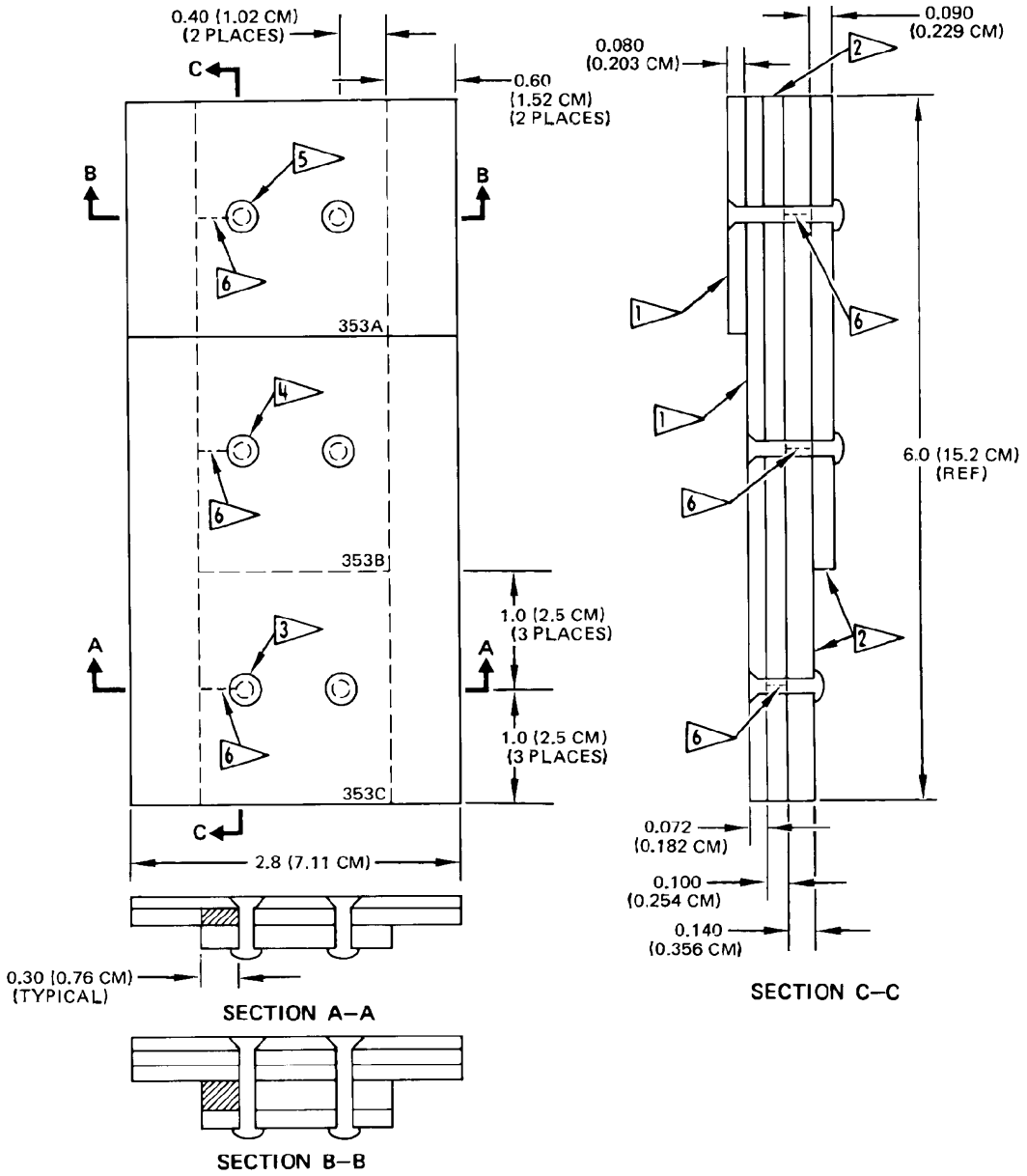

NOTES

- ALL DIMENSIONS ARE IN INCHES (CENTIMETERS IN PARENTHESES)
- TOLERANCE: X.X ± 0.05 (0.13 CM), X.XX ± 0.02 (0.05 CM), X.XXX ± 0.005 (0.013 CM)
- STEEL STAMP WITH 353A, 353B AND 353C

1 MATERIAL: 2024–T3 CLAD ALUMINUM

2 MATERIAL: 2024–T42 BARE ALUMINUM

3 FASTENERS : BACB30GY6A6 BOLT WITH BACC30K6 COLLAR (2 PLACES)

4 FASTENERS : BACB30GY6A7 BOLT WITH BACC30K6 COLLAR (2 PLACES)

5 FASTENERS : BACB30GY6A8 BOLT WITH BACC30K6 COLLAR (2 PLACES)

6 JEWELER'S SAWCUT 0.030 (0.076 CM) MAXIMUM WIDTH

2159143 S0000471809_V1

Reference Standard 353A, 353B and 353C
Figure 2

BOEING PROPRIETARY - Copyright © Unpublished Work - See title page for details

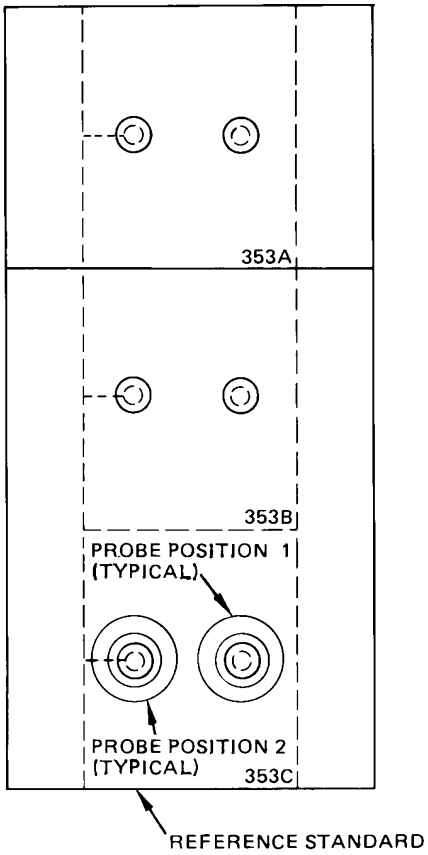

NOTE

- PROBE POSITIONS FOR REFERENCE STANDARD 353C SHOWN, PROBE POSITION FOR REFERENCE STANDARD 353A AND 353B SIMILAR

2159146 S0000471810_V1

Probe Calibration Positions on Reference Standard 353A, 353B and 353C
Figure 3

BOEING PROPRIETARY - Copyright © Unpublished Work - See title page for details

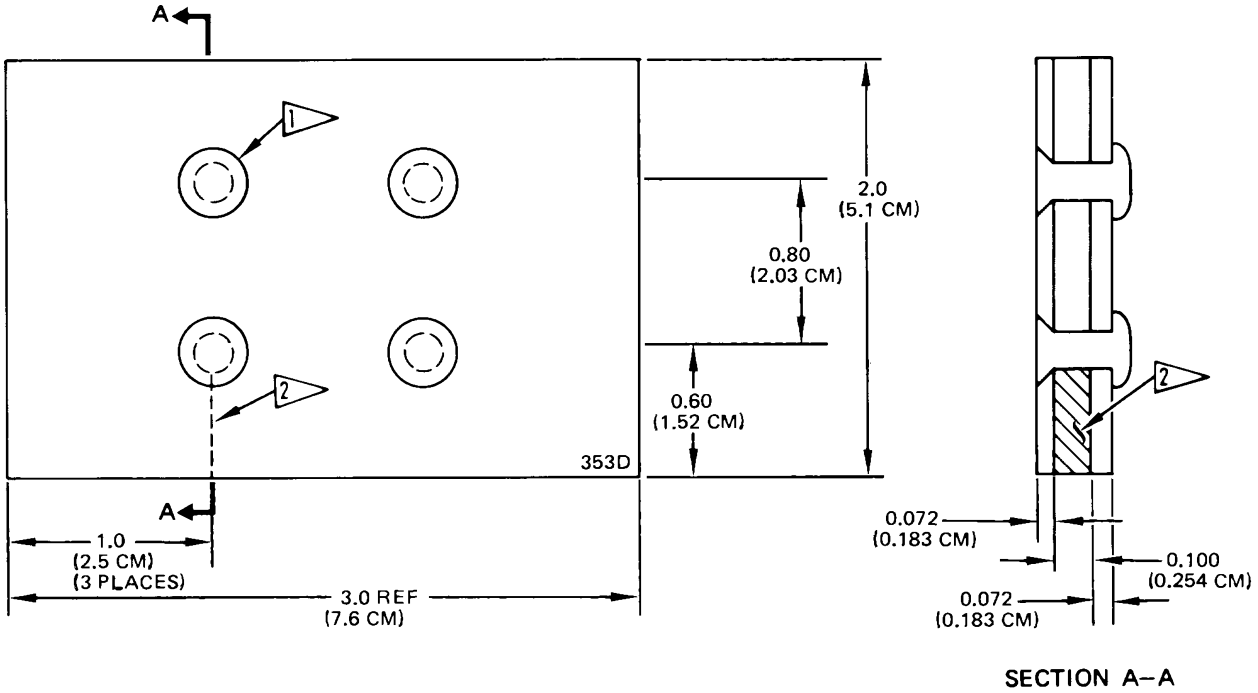

NOTES

- ALL DIMENSIONS ARE IN INCHES (CENTIMETERS IN PARENTHESES)
- TOLERANCE: X.X ± 0.05 (0.13 CM)
  X.XX ± 0.02 (0.05 CM)
  X.XXX ± 0.005 (0.013 CM)
- MATERIAL: 2024–T3 OR –T4 ALUMINUM
- STEEL STAMP WITH 353D

1 BACR15CE6D7 RIVET (4 PLACES)

2 JEWELER'S SAWCUT 0.030 (0.076 CM) MAXIMUM WIDTH

2159147 S0000471811_V1

Reference Standard 353D
Figure 4

BOEING PROPRIETARY - Copyright © Unpublished Work - See title page for details

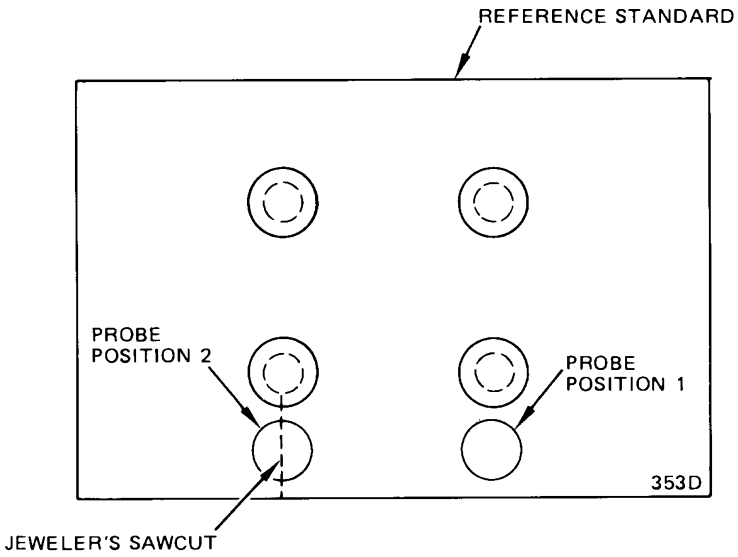

2159149 S0000471812_V1

Probe Calibration Position on Reference Standard 353D
Figure 5

BOEING PROPRIETARY - Copyright © Unpublished Work - See title page for details

2159151 S0000471813_V1

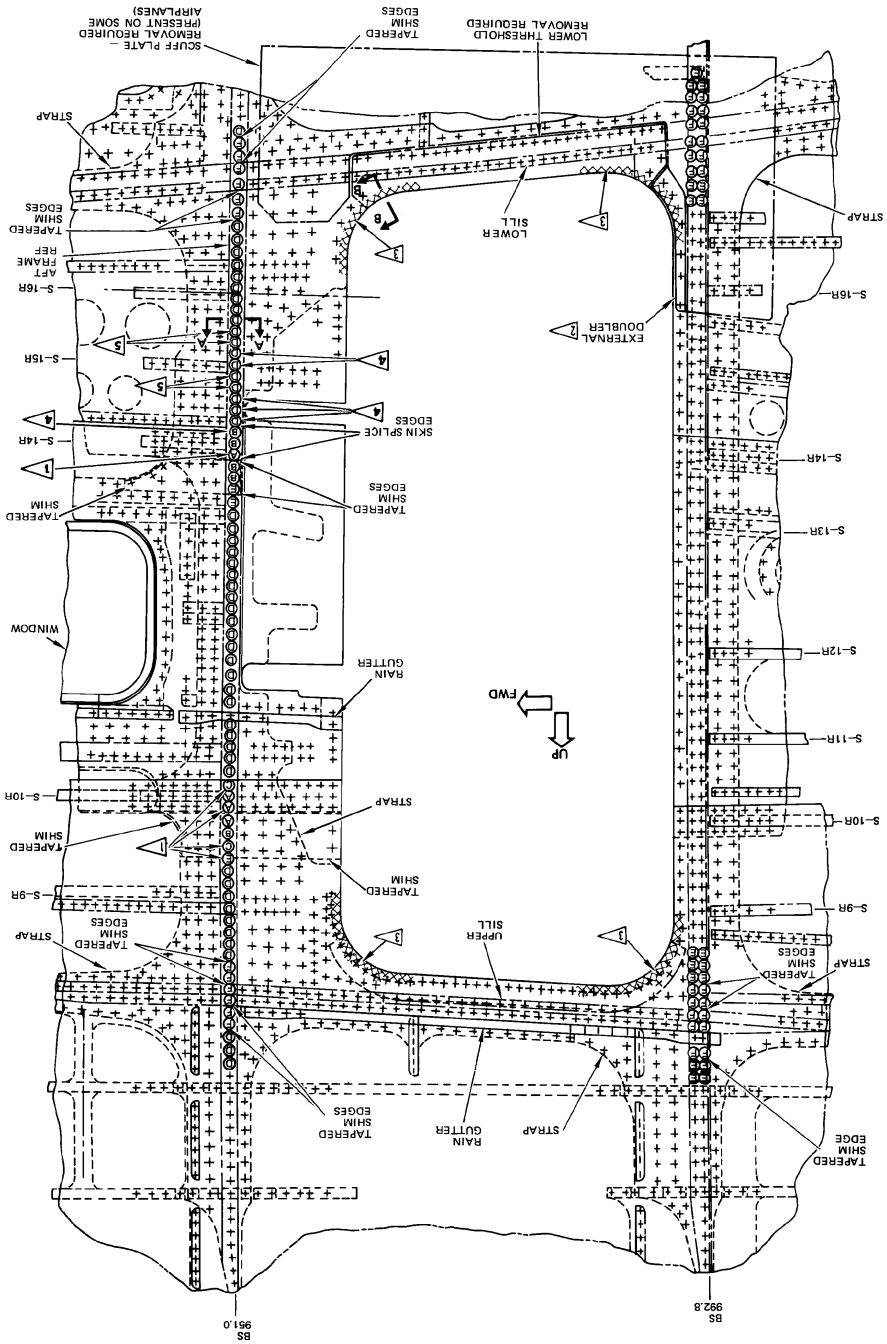

Aft Galley Door Cutout Tear Strap
Figure 6 (Sheet 1 of 2)

BOEING PROPRIETARY - Copyright © Unpublished Work - See title page for details

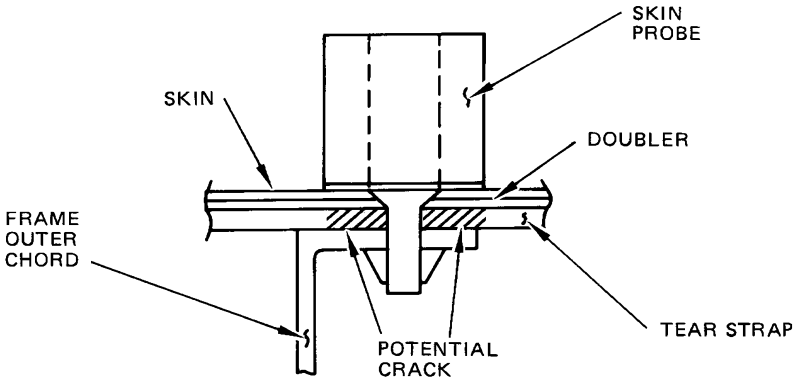

SECTION A–A (TYP)

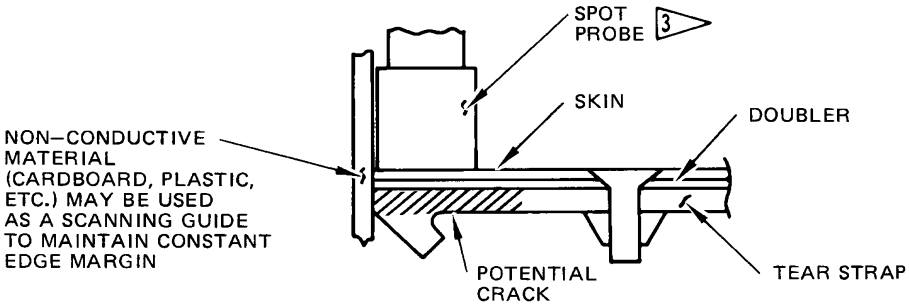

SECTION B–B (TYP)

NOTES

XXXX INSPECTION AREA

(A) FASTENERS TO BE INSPECTED WITH ENCIRCLING (RING) PROBE PER PAR .5.A – LETTER REFERS TO INSPECTION CODE.

1 SURFACE OR SUBSURFACE EDGES MAY CAUSE CRACK–LIKE INDICATIONS IN THESE LOCATIONS.

2 EXTERNAL DOUBLER (NON–REMOVABLE) – PRESENT ON AIRPLANES WITH SCUFF PLATE.

3 TEAR STRAP CUTOUT EDGE TO BE INSPECTED PER PAR.5.B – PLACE SPOT PROBE ON SKIN AND SCAN PER XXXX WHILE MAINTAINING A CONSTANT EDGE MARGIN. A NON–CONDUCTIVE MATERIAL MAY BE USED AS A SCANNING GUIDE – SEE SECTION B–B.

4 INSPECT AS CODE A FASTENERS ON AIRPLANES WITH SADDLE–SHAPED SKIN LAP EXTENSION.

5 INSPECT AS CODE B FASTENERS ON AIRPLANES WITH SADDLE–SHAPED SKIN LAP EXTENSION.

2159152 S0000471814_V1

Aft Galley Door Cutout Tear Strap
Figure 6 (Sheet 2 of 2)

BOEING PROPRIETARY - Copyright © Unpublished Work - See title page for details

PART 6 - EDDY CURRENT

PRESSURE BULKHEAD "Y" CHORD - BS 1016 (LFEC)

1. Purpose

A. This procedure uses low frequency eddy current to find circumferential cracks in the “Y” chord of the BS 1016 aft pressure bulkhead. See Figure 1 for the inspection areas.

B. This procedure uses an instrument with an impedance plane display or a meter display.

C. 737 Supplemental Structural Inspection Document (D6-37089) Reference:

(1) Item: F-30

2. Equipment

A. Instrument - Use an eddy current instrument with a variable frequency that can be calibrated as specified in this procedure. The instruments that follow were used to help prepare this procedure.

(1) Phasec 1.1; Hocking Instruments

(2) Phasec 2200; Hocking Instruments

(3) NDT 19; Staveley, Inc.

B. Probe - Use a shielded, low frequency, ring probe with an inner diameter of 0.30 inch (7.6 mm) and an outer diameter of 0.80 inch (20.3 mm) that can be adjusted to 400 Hz. The probe that follows was used to help prepare this procedure.

(1) SPO 996; Nortec, Inc.

C. Reference Standard – Make reference standard 317 as specified in Figure 2.

D. Probe Positioner – Make the probe positioner as specified in Figure 3.

3. Prepare for the Inspection

A. Identify all of the inspection areas. See Figure 1 and Figure 5.

B. Get access to the aft side of the BS 1016 aft pressure bulkhead through the access door shown in Figure 1.

C. Clean the inspection area.

4. Instrument Calibration

A. Calibrate the instrument to examine the BS 1016 “Y” Chord for circumferential cracks.

(1) Set the instrument frequency to 400 Hz.

(2) Put the probe at position 1 on reference standard 317. See Figure 4.

NOTE: The probe must be held tightly against the edge of the simulated pressure bulkhead (of the reference standard).

(3) Balance the instrument as specified in the manufacturer’s instructions.

(4) Adjust the instrument for lift-off.

NOTE: This adjustment can be done with two sheets of paper on the reference standard.

(5) Set the balance point signal from position 1 to 20 percent of full screen height.

BOEING PROPRIETARY - Copyright © Unpublished Work - See title page for details

(6) Put the probe at position 2 (see Figure 4). At this position, you must get an increase in signal height.

(7) Adjust the sensitivity so that the difference in the signals from the notched (Position 2) and the unnotched (Position 1) locations is 60 percent of full screen height (see Figure 6).

(8) Put the probe back at position 1 and make sure that the balance and the lift-off signals are correct. If adjustments are necessary, do Paragraph 4.A.(2) thru Paragraph 4.A.(7) again.

5. Inspection Procedure

A. Examine the BS 1016 “Y” chord for circumferential cracks. See Figure 1 and Figure 5 for the inspection locations.

(1) Calibrate the instrument as specified in Paragraph 4.

(2) Identify the inspection locations shown in Figure 5.

CAUTION: THE BASELINE MUST NOT BE MADE AT AREAS ADJACENT TO INSPECTION LOCATIONS BECAUSE CRACKS CAN TRAVEL CIRCUMFERENTIALLY INTO THESE LOCATIONS.

(3) Put the probe at several inspection locations to identify the baseline signal (the signal that identifies a satisfactory location) before you examine all of the inspection locations.

NOTE: The baseline signal must be from a location that does not have a crack. The baseline signal can not be from a location where the structure can give a crack type signal. Areas between S-3L and S-4L and also between S-15L and S-16L can be used to get a satisfactory baseline.

(a) Put the probe at a location that gives a satisfactory baseline signal and set the balance point to 20 percent of full screen height. Make a record of this location because you can go back to this location during the inspection to make sure the instrument stays calibrated as specified in Paragraph 4.

NOTE: Do not make sensitivity adjustments after the baseline signal has been adjusted to 20 percent of full screen height.

(b) Put the probe at the “Y” chord frame splice shown in Figure 5, flagnote 2, to make sure you can continue to get a crack signal. This location will give you a full screen height signal.

(4) Examine each location identified in Figure 5 for cracks and make a record of the instrument indications.

NOTE: It is recommended that you make a copy of Figure 5 to take to the airplane. It can be used to identify the inspection locations and to make a record of the instrument indications that occur during the inspection.

6. Inspection Results

A. Inspection locations that cause signals to occur that are 40 percent of full screen height (or more) (or 20 percent higher (or more) than the baseline signal identified in Paragraph 5.A.(3)) are possible crack indications. Areas that cause possible crack indications to occur must be examined some more.

BOEING PROPRIETARY - Copyright © Unpublished Work - See title page for details

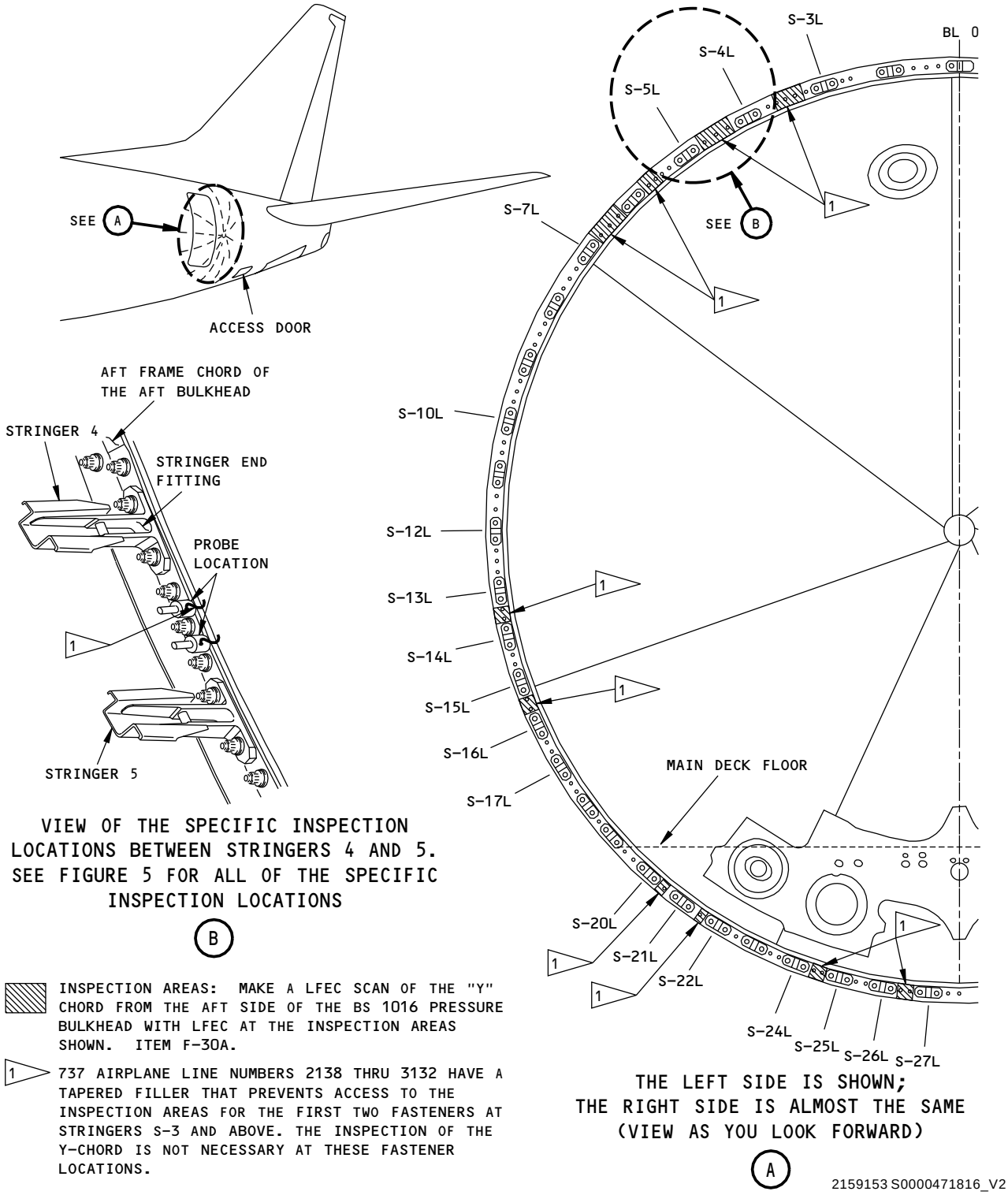

BS 1016 Pressure Bulkhead "Y" Chord Inspection Areas
Figure 1

BOEING PROPRIETARY - Copyright © Unpublished Work - See title page for details

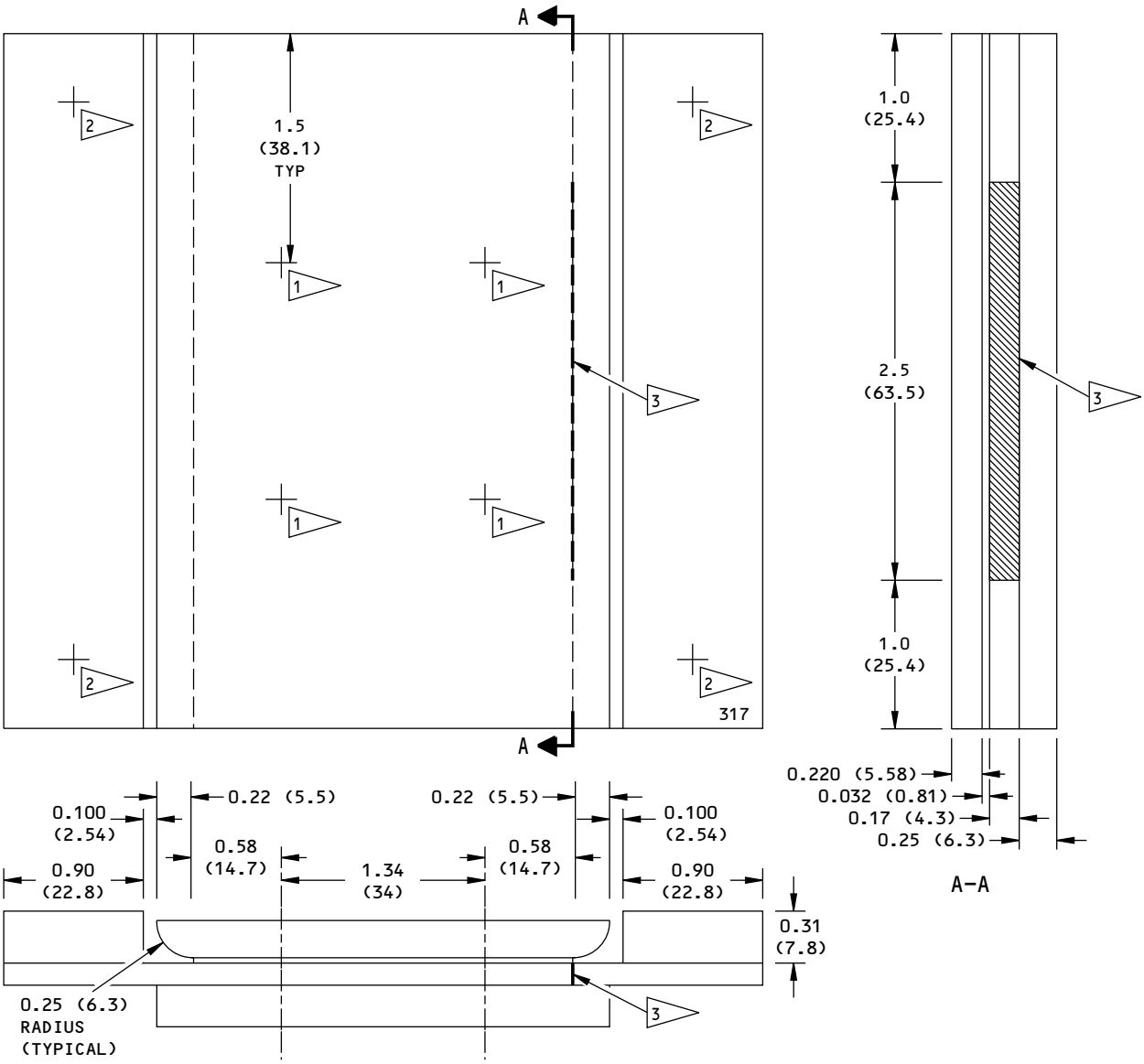

NOTES:

- ALL DIMENSIONS ARE IN INCHES (MILLIMETERS ARE IN PARENTHESES)
- TOLERANCE: X.XXX = ±0.005 (0.127) X.XX = ±0.02 (0.51) X.X = ±0.05 (1.3)
- MATERIAL: 2024-T3 OR T4 ALUMINUM
- ETCH OR STEEL STAMP WITH 317

1 FASTENERS: BACB30MR5C10 BOLTS, BACN10GW5 NUTS (ALUMINUM BOLTS WITH 0.58-INCH (14.7) DIAMETER HEADS MAY BE SUBSTITUTED FOR BACB30MR5C10 BOLTS. ANY STEEL NUT MAY BE SUBSTITUTED FOR BACN10GW5 NUTS.

2 FASTENERS: ALL BOLTS AND NUTS CAN BE USED; 0.375 (9.52) MAXIMUM DIAMETER

3 JEWELER'S SAWCUT OR EDM NOTCH; 0.030 (0.76) MAXIMUM WIDTH. ALIGN THE NOTCH WITH THE EDGE OF THE 0.032 (0.81) PIECE ± 0.005 (0.13).

2159160 S0000471817_V1

Reference Standard 317
Figure 2

BOEING PROPRIETARY - Copyright © Unpublished Work - See title page for details

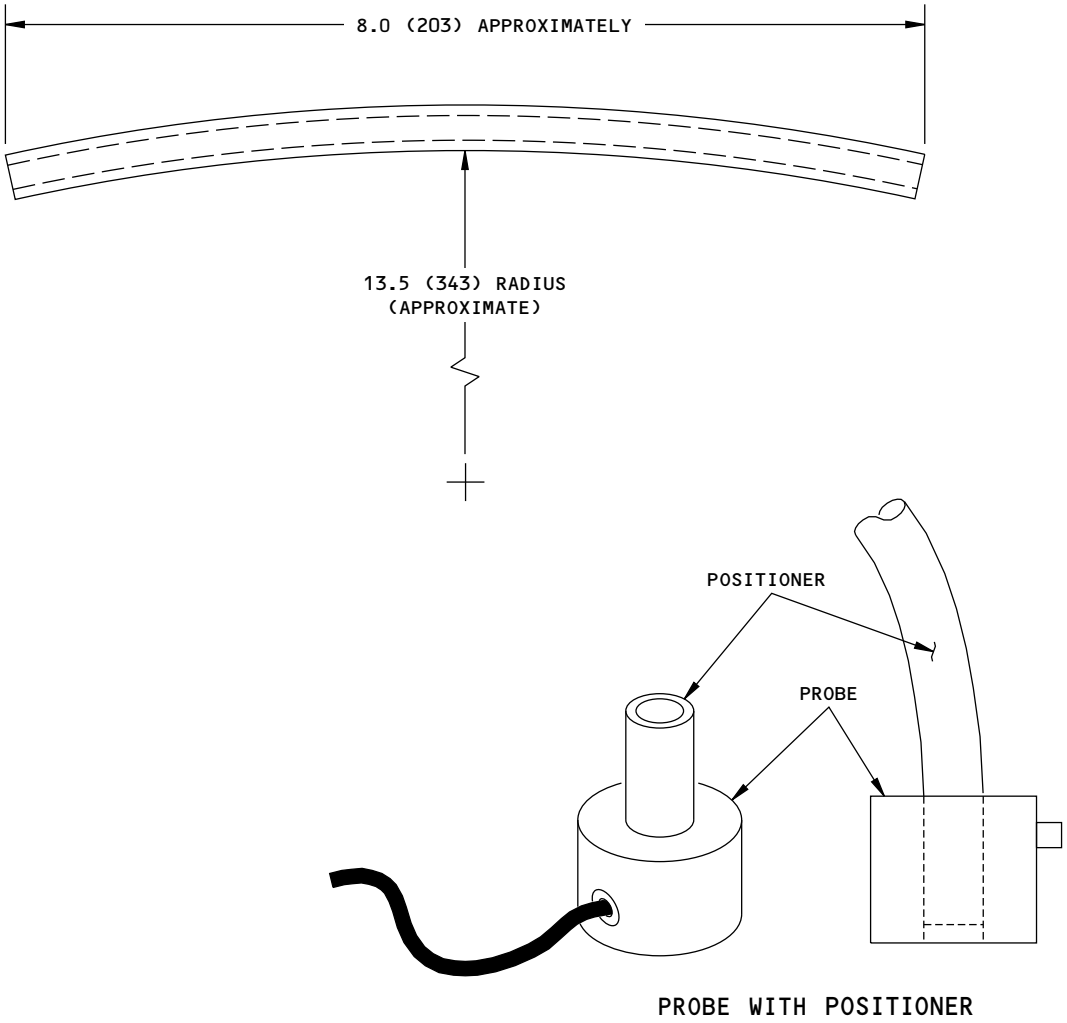

NOTES:

- ALL DIMENSIONS ARE IN INCHES (MILLIMETERS ARE IN PARENTHESES)
- MATERIAL: 0.3 (7.6) OUTER DIAMETER PLASTIC ROD OR TUBE
- THE TUBE MUST FIT TIGHTLY INTO THE HOLE OF THE PROBE
- USE WITH PROBE SPO 996

2159163 S0000471818_V1

Probe Positioner
Figure 3

BOEING PROPRIETARY - Copyright © Unpublished Work - See title page for details

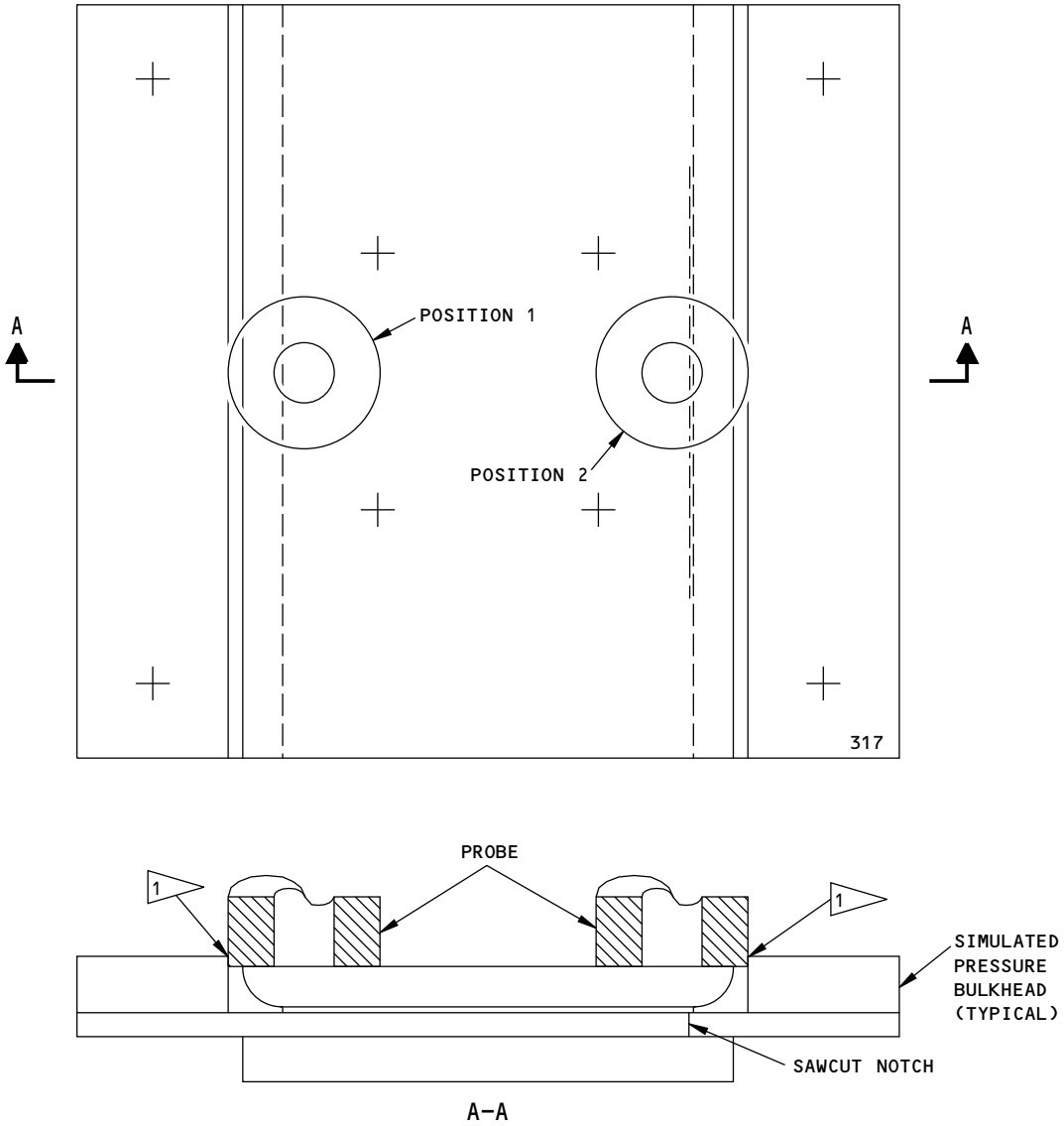

NOTE:

1 PUT THE PROBE ON THE REFERENCE STANDARD AT THE POSITIONS SHOWN AND MOVE THE PROBE SO THAT IT IS AGAINST THE SIMULATED PRESSURE BULKHEAD.

2159165 S0000471819_V1

Probe Calibration Positions on Reference Standard 317
Figure 4

BOEING PROPRIETARY - Copyright © Unpublished Work - See title page for details

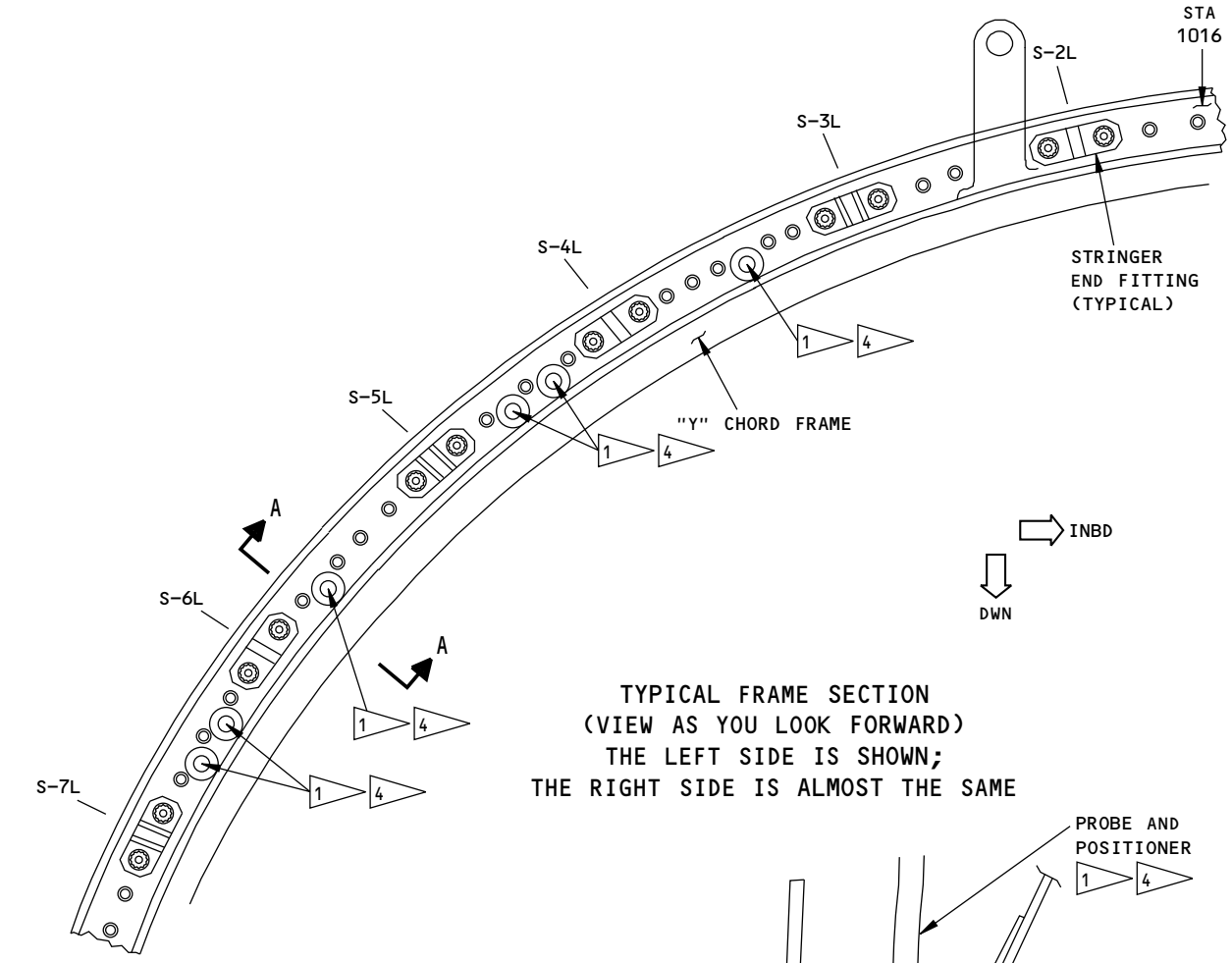

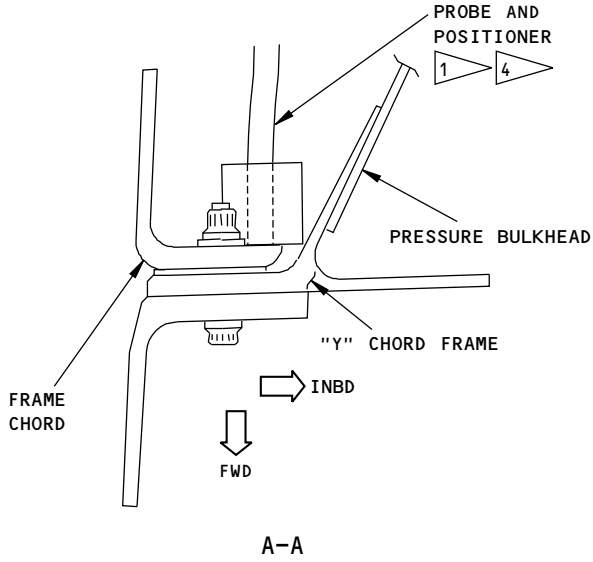

RING PROBE

CALIBRATION VERIFICATION LOCATION

1 PUT THE PROBE ON THE AFT SIDE OF THE FRAME CHORD SO THAT IT IS HELD TIGHTLY AGAINST THE "Y" CHORD AS SHOWN IN SECTION A-A.

2 PUT THE PROBE ON THE AFT SIDE OF THE "Y" CHORD SPLICE. A FULL SCREEN HEIGHT SIGNAL WILL OCCUR IF THE INSTRUMENT IS CALIBRATED CORRECTLY.

3 IF YOU PUT THE PROBE AT THESE LOCATIONS YOU WILL GET A CRACK-TYPE INDICATION.

4 737 AIRPLANE LINE NUMBERS 2138 THRU 3132 HAVE A TAPERED FILLER THAT PREVENTS ACCESS TO THE INSPECTION AREAS FOR THE FIRST TWO FASTENERS AT STRINGERS S-3 AND ABOVE. THE INSPECTION OF THE Y-CHROD IS NOT NECESSARY AT THESE FASTENER LOCATIONS.

2159166 S0000471820_V2

BS 1016 Pressure Bulkhead "Y" Chord Inspection Areas
Figure 5 (Sheet 1 of 3)

BOEING PROPRIETARY - Copyright © Unpublished Work - See title page for details

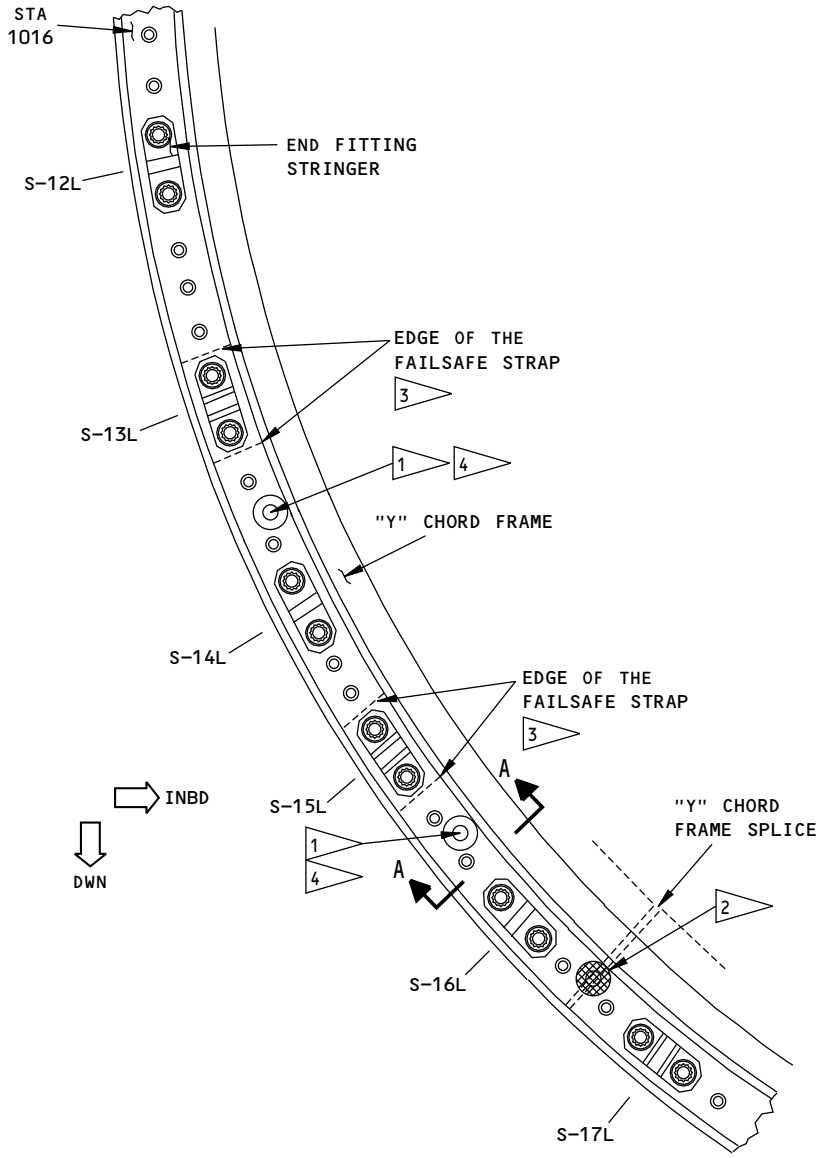

TYPICAL FRAME SECTION
(VIEW AS YOU LOOK FORWARD)
THE LEFT SIDE IS SHOWN;
THE RIGHT SIDE IS ALMOST THE SAME

2159169 S0000471821_V2

BS 1016 Pressure Bulkhead "Y" Chord Inspection Areas
Figure 5 (Sheet 2 of 3)

BOEING PROPRIETARY - Copyright © Unpublished Work - See title page for details

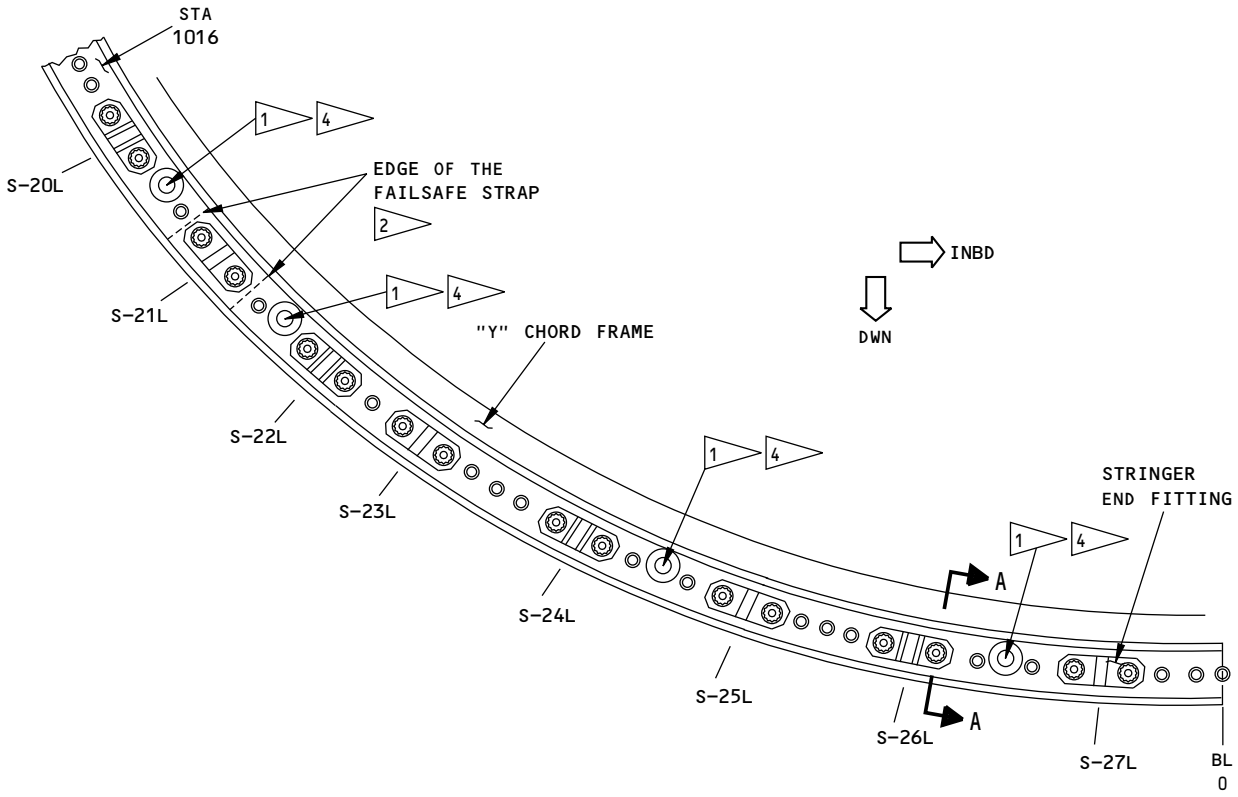

TYPICAL FRAME SECTION
(VIEW AS YOU LOOK FORWARD)
THE LEFT SIDE IS SHOWN;
THE RIGHT SIDE IS ALMOST THE SAME

2159170 S0000471822_V2

BS 1016 Pressure Bulkhead "Y" Chord Inspection Areas
Figure 5 (Sheet 3 of 3)

BOEING PROPRIETARY - Copyright © Unpublished Work - See title page for details

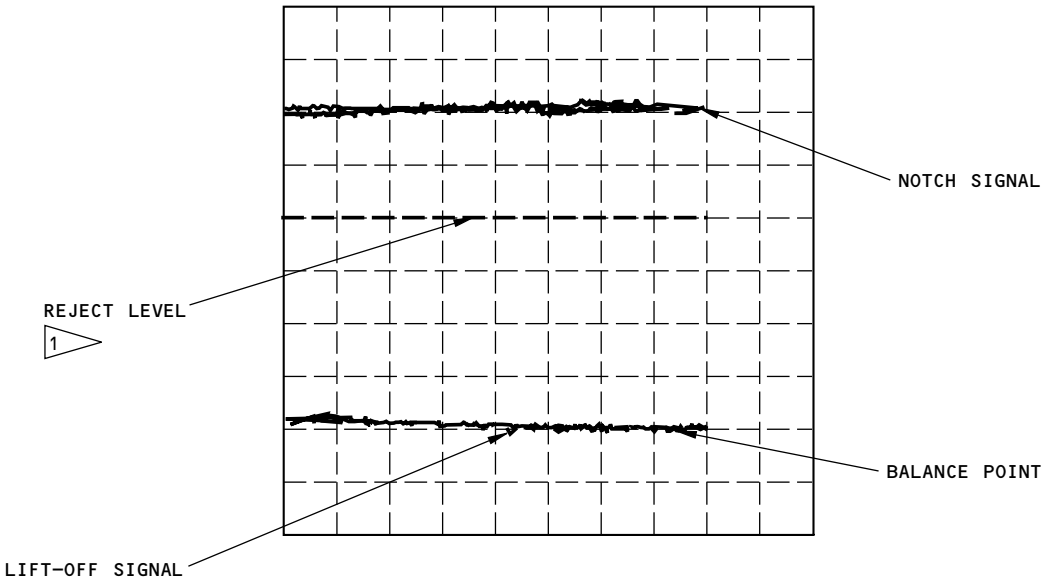

SCREEN DISPLAY

NOTES:

1 REJECT LEVEL (40% OR MORE ABOVE THE BASELINE SIGNAL)

2159171 S0000471823_V1

Calibration Screen Display
Figure 6

BOEING PROPRIETARY - Copyright © Unpublished Work - See title page for details

PART 6 - EDDY CURRENT

BULKHEAD OUTER CHORD, DOUBLER AND STRAP, STRINGERS S-25L THRU S-25R AT BS 294.5 (LFEC)

1. Purpose

A. Use this procedure to do a subsurface inspection for cracks in the chord, doubler, and strap of the aft bulkhead in the nose gear wheel well at BS 294.5, from stringers S-25L to S-25R.

B. See Figure 1 for the location of this inspection and the fastener locations to examine.

C. 737 Supplemental Structural Inspection Document (D6-37089) Reference:

(1) Item: F-24

2. Equipment

A. General

(1) Use inspection equipment that can be calibrated on the reference standard as specified in Paragraph 4.

(2) Refer to Part 1, 51-01-00, for data about the equipment manufacturers.

B. Instrument - Use an eddy current instrument with an impedance plane display that can:

(1) Operate at a frequency of 800 Hz.

(2) Be calibrated as specified in the calibration instructions of this procedure. The instruments that follow were used to help prepare this procedure.

(a) NDT 19e; Nortec/Staveley, Inc.

(b) Phasec 2200; Hocking

C. Probes – Use a reflection ring probe that:

(1) Can operate at a frequency of 800 Hz.

(2) Has an inner diameter between 0.30 inch (7.6) and 0.33 inch (8.4 mm). The probes that follow were used to help prepare this procedure.

(a) SPO-996; Nortec Inc.

(b) RR057-6/TF; NDT Engineering, Inc. (Olympus)

(c) RR207-1 TF; NDT Engineering, Inc. (Olympus)

(d) RR028-1; NDT Engineering, Inc. (Olympus)

D. Reference Standards - Make reference standards 312 and 313A and B as specified in Figure 2 and Figure 3.

3. Prepare for the Inspection

A. Identify and clean the inspection areas shown in Figure 1.

B. If the fasteners cannot be seen through the paint, remove some paint until the fasteners can be seen.

C. Refer to Figure 1 and mark the fasteners in the inspection area with the different fastener codes given in Figure 1 (use an approved marker).

BOEING PROPRIETARY - Copyright © Unpublished Work - See title page for details

4. **Instrument Calibration**

NOTE: An inspection code is used to identify fastener locations that have equivalent inspection conditions. There are three inspection codes identified in this procedure and a new calibration must be done for each inspection code identified. The steps that follow are applicable to all of the inspection codes.

A. Refer to Figure 1 and identify the fastener locations to examine and the inspection code to calibrate the instrument to.

B. Refer to Table 1 and determine the necessary reference standard to use to examine fasteners with the same inspection code.

Table 1: Inspection Code/Reference Standard

Inspection Code	Reference Standard
A	313A
B	312
C	313B

C. Set the instrument frequency to 800 Hz.

D. Put the probe at position 1 on the necessary reference standard and center the probe on the fastener as shown in Figure 4.

E. Balance the instrument with the null/balance instrument control.

F. Set the instrument balance point at 20 percent of the vertical display and 60 percent of the horizontal display.

G. Adjust the phase control so that the signal moves horizontally from right to left when the probe is lifted off the reference standard.

H. Put the probe at position 2 on the reference standard as shown in Figure 4. Make sure to center the probe on the fastener.

NOTE: If the signal is not on the screen with the probe centered on the fastener at position 2, it is possible that the gain is set too high. Decrease the gain until the signal comes into view.

I. Adjust the gain to set the signal from the reference notch at 80 percent of the screen display height (full screen height, FSH).

5. **Inspection Procedure**

A. Get a standard signal on the airplane as follows:

(1) Center the probe on a fastener in the inspection area (of the same inspection code that the instrument is calibrated for) and balance the instrument. See Figure 1 for the fastener locations to examine.

NOTE: Do not adjust the instrument gain.

(2) Examine a minimum of two more fastener locations of the same inspection code to identify the standard signal for a satisfactory fastener location.

NOTE: It is possible that the fastener hole you used to get the standard signal was cracked. If this occurs, all fastener holes that are not cracked will have a screen signal below the balance point. Put the probe on a different inspection fastener location if you think you set-up on a cracked fastener hole.

BOEING PROPRIETARY - Copyright © Unpublished Work - See title page for details

(3) Put the probe on the fastener location that gives the minimum signal and balance the instrument again at this fastener location. Refer back to this fastener location as necessary to do a check of the standard signal.

B. Do an inspection at all the fastener locations that have the same inspection code for which the instrument is calibrated. See Figure 1 for the fastener locations and inspection codes. During the inspection, do as follows:

(1) Make sure that you center the ring probe on each fastener location.

(2) Make a mark at the locations where signals occur that are 50 percent or more of the display.

(3) Frequently do a calibration test of the instrument as follows:

NOTE: Do not adjust the instrument gain.

(a) Put the probe at position 1 on the reference standard used for the instrument calibration and balance the instrument.

(b) Put the probe at position 2 and compare the signal you get now with the signal you got from the notch during instrument calibration.

(c) If the signal from the notch in the reference standard has changed 10 percent or more from the signal you got during calibration, do the calibration and inspection again for all the fasteners examined since the last calibration test.

C. Do Paragraph 5.A. and Paragraph 5.B. for all inspection codes.

NOTE: The instrument must be calibrated to the instructions of Paragraph 4., before the fastener locations of different inspection codes are examined.

6. Inspection Results

A. A signal that is 50 percent or more of the vertical display (FSH) is an indication of a crack. Areas that cause crack signals to occur must be examined more fully.

B. Compare the signal that occurs during the inspection to the signal you got from the notch in the reference standard during calibration.

C. Other conditions that can cause crack-type signals are:

(1) A change in the space between fasteners or from the fastener to the edge. See if the same fastener location on the other side of the door has the same amount of space and, if so, compare the results from the two locations.

(2) The probe is too close to the edge of the skin or subsurface structure. See if the same location on the opposite side of the inspection area (left or right stringer location) gives equivalent results.

(3) A different type of fastener has been installed. See if the same type fastener is installed on the opposite stringer location and compare the results with that fastener.

(4) An edge of a strap splice is at this location. Look at the edge of the door cutout for a strap splice that is at the location of the indication.

D. Compare the signal that occurs during the inspection with the signal from the same fastener location on the opposite stringer (left or right stringer location) or on a different airplane of the same configuration.

E. To make an analysis of possible subsurface cracks, remove the fastener and do an open hole eddy current inspection as specified in Part 6, 51-00-00, Procedure 16.

BOEING PROPRIETARY - Copyright © Unpublished Work - See title page for details

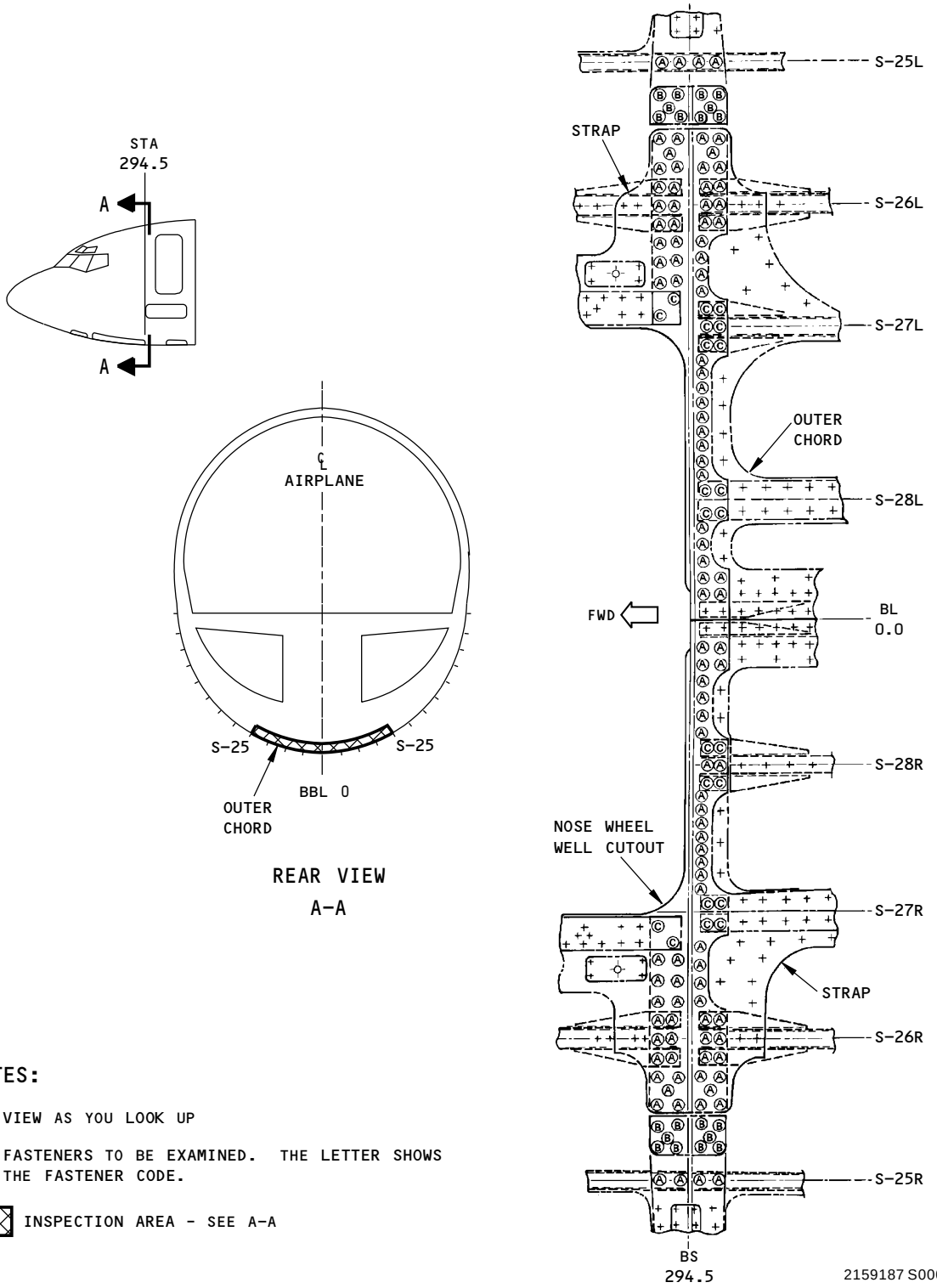

NOTES:

- VIEW AS YOU LOOK UP

Ⓐ FASTENERS TO BE EXAMINED. THE LETTER SHOWS THE FASTENER CODE.

INSPECTION AREA - SEE A-A

Bulkhead Outer Chord, Doubler and Strap from Stringer S-25L thru S-25R - BS 294.5
Figure 1

BOEING PROPRIETARY - Copyright © Unpublished Work - See title page for details

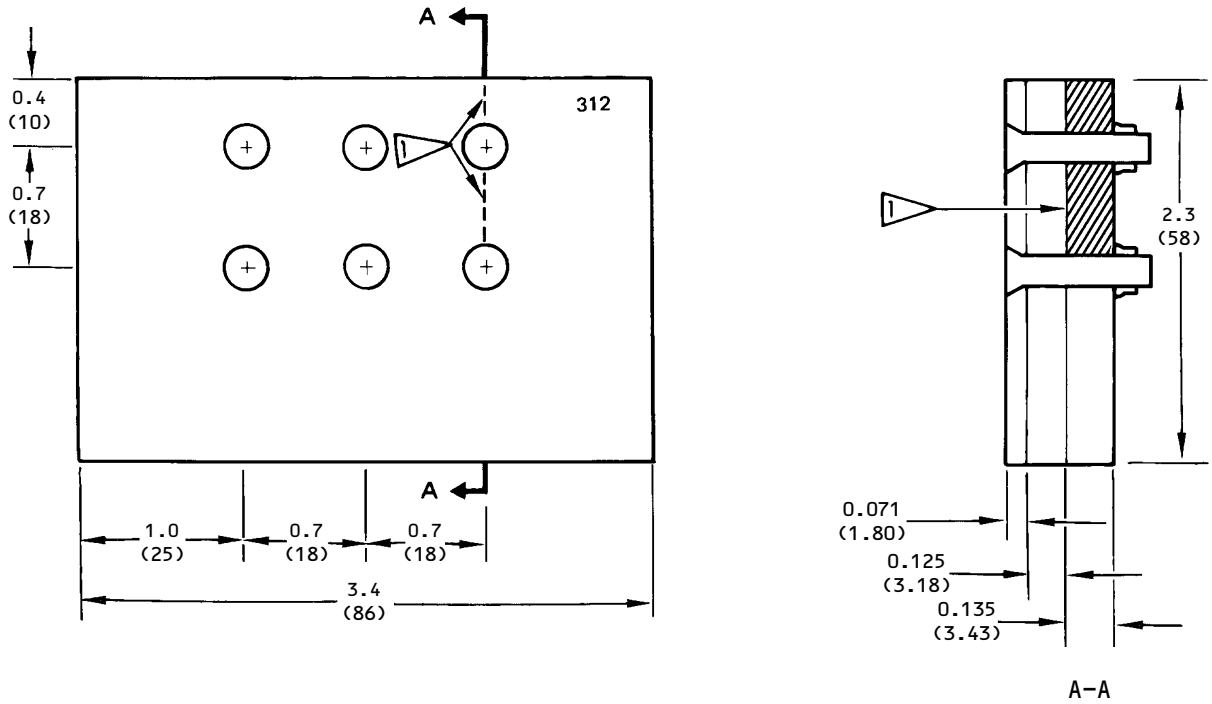

NOTES:

- ALL DIMENSIONS ARE IN INCHES
  (MILLIMETERS ARE IN PARENTHESES).
- TOLERANCES (UNLESS SPECIFIED DIFFERENTLY):
  X.XXX = ±0.005 (±0.13)
  X.XX = ±0.02 (±0.5)
  X.X = ±0.05 (±1.3)
- MATERIAL: 2024-T3 OR T4 ALUMINUM
- FASTENERS: BACB30GY6A5 BOLTS, BACC30K6 COLLARS (6 LOCATIONS)
  (OPTIONAL: BACB30FN6A5 BOLTS, BACC30M6 COLLARS)
- ETCH OR STEEL STAMP WITH 312

1 EDM NOTCH OR JEWELER'S SAWCUT
0.030 (7.62) MAXIMUM WIDTH

2159188 S0000471826_V1

Reference Standard 312
Figure 2

BOEING PROPRIETARY - Copyright © Unpublished Work - See title page for details

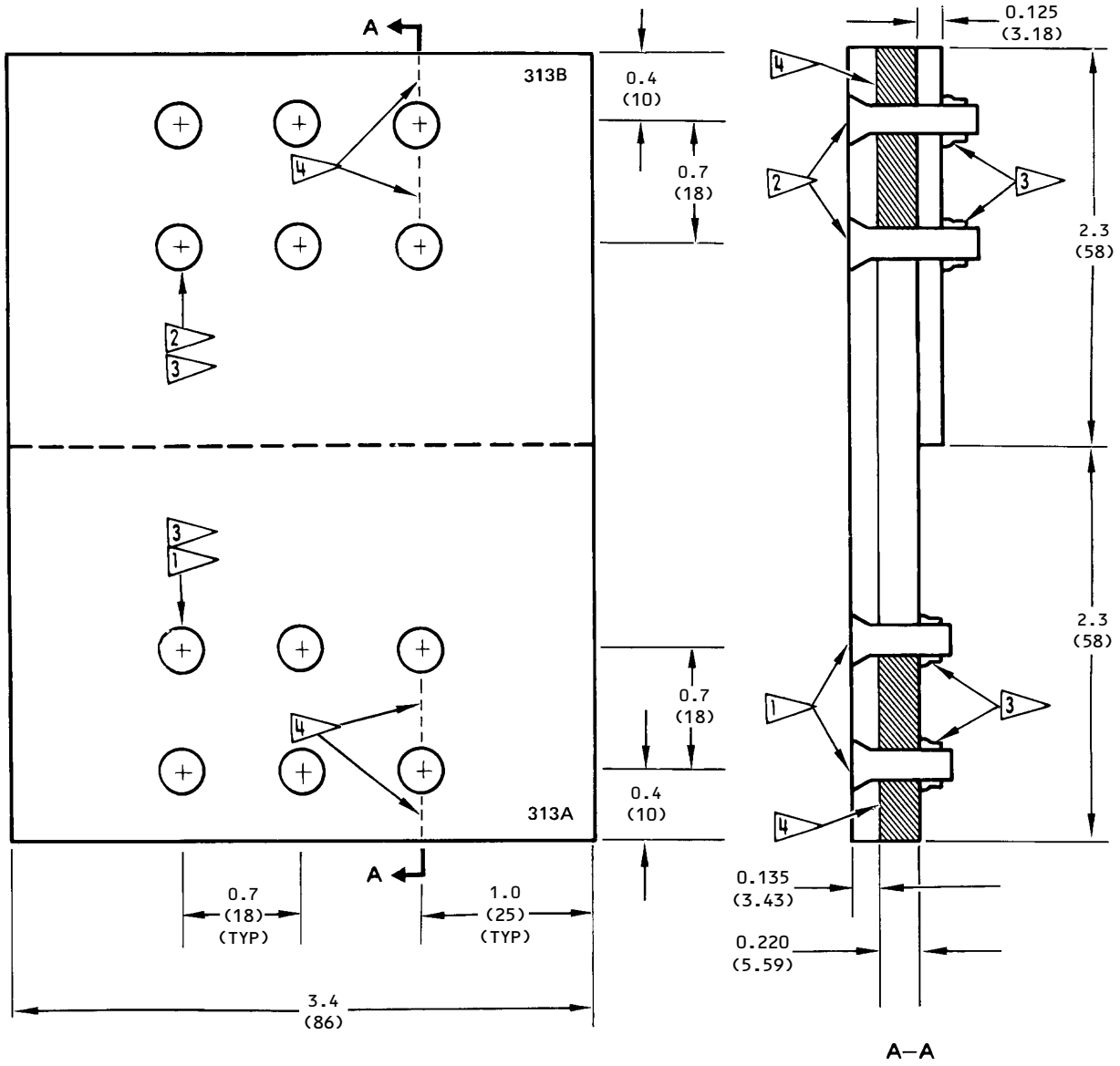

NOTES:

- ALL DIMENSIONS ARE IN INCHES (MILLIMETERS ARE IN PARENTHESES).
- TOLERANCES (UNLESS SPECIFIED DIFFERENTLY):
  X.XXX = ±0.005 (±0.13)
  X.XX = ±0.02 (±0.5)
  X.X = ±0.05 (±1.3)
- MATERIAL: 2024-T3 OR T4 ALUMINUM
- ETCH OR STEEL STAMP WITH 313A AND 313B

1 BACB30GY6A-6 (6 LOCATIONS) OR BACB30FN6A-6

2 BACB30GY6A-8 (6 LOCATIONS) OR BACB30FN6A-8

3 BACC30K6 COLLARS (12 LOCATIONS) OR BACC30M6

4 EDM NOTCH OR JEWELER'S SAWCUT; 0.030 (7.62) MAXIMUM WIDTH

2159190 S0000471828_V1

Reference Standard 313A and 313B
Figure 3

BOEING PROPRIETARY - Copyright © Unpublished Work - See title page for details

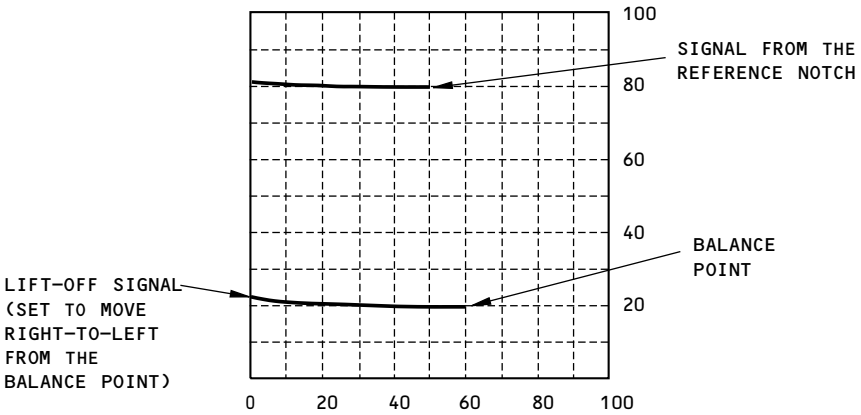

SCREEN DISPLAY OF INSTRUMENT CALIBRATION

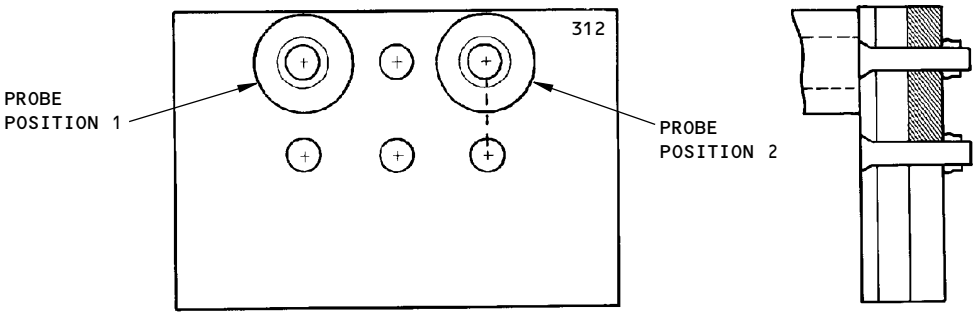

PROBE CALIBRATION POSITIONS ON REFERENCE STANDARD 312

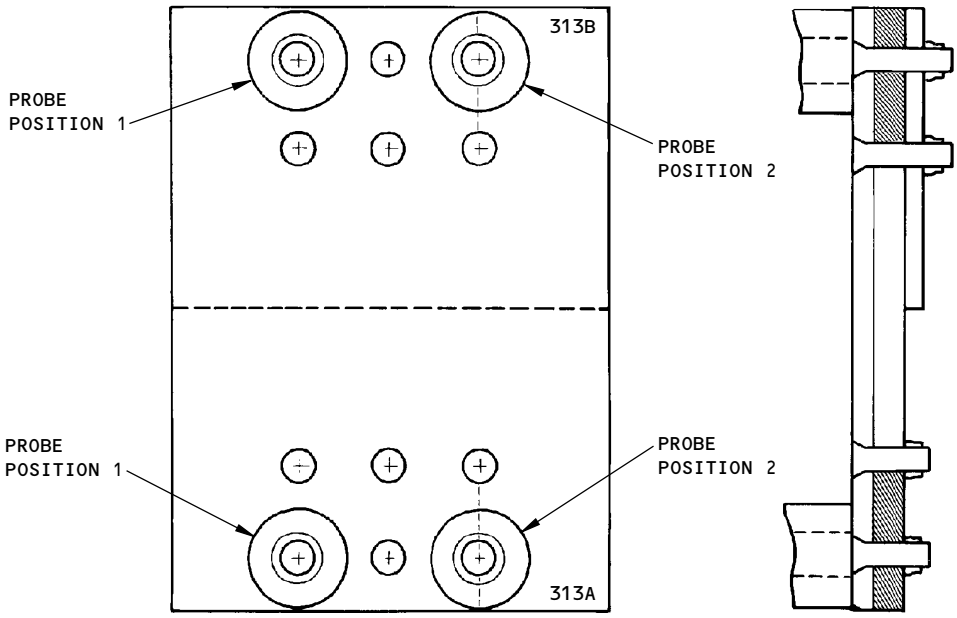

PROBE CALIBRATION POSITIONS ON REFERENCE STANDARDS 313A AND 313B

2159192 S0000471829_V1

Instrument Calibration
Figure 4

BOEING PROPRIETARY - Copyright © Unpublished Work - See title page for details

PART 6 - EDDY CURRENT

BULKHEAD OUTER CHORD AT BL 0.0 - BS 294.5 (HFEC)

1. **Purpose**
   - A. To find cracks in the leading edge of the outer chord horizontal flange at the BS 294.5 bulkhead.
   - B. The inspection area is 2.0 inches on each side of BL 0.0 at BS 294.5.
   - C. 737 Supplemental Structural Inspection Document (D6-37089) Reference:
     - (1) Item: F-24
2. **Equipment**
   - A. General
     - (1) Use inspection equipment that can be calibrated on the reference standard as specified in Paragraph 4.
     - (2) Refer to Part 6, 51-00-00, Procedure 23, for the data about the equipment.
   - B. Instrument
     - (1) Use an eddy current instrument that:
       - (a) Has an impedance plane display.
       - (b) Operates at a frequency between 50 kHz and 500 kHz.
   - C. Probe
     - (1) A straight or right angle probe is necessary. The probe must:
       - (a) Operate at a frequency from 50 kHz to 500 kHz.
       - (b) Have a maximum external diameter of 0.13 inch (3.3 mm).
       - (c) Be shielded.
       - (d) Operate as specified in Part 6, 51-00-00, Procedure 23.
     - (2) The probe that follows was used to help prepare this procedure.
       - (a) MP 902-50B; NDT Product Engineering
   - D. Reference Standard
     - (1) Use reference standard 189 or an equivalent. Refer to Part 6, 51-00-00, Procedure 23, for instructions to make this reference standard.
3. **Prepare for the Inspection**
   - A. Get access through the nose wheel well area.
   - B. Clean the surfaces of the inspection area. See Figure 1.
4. **Instrument Calibration**
   - A. Refer to Part 6, 51-00-00, Procedure 23, paragraph 5., for the calibration procedure.
5. **Inspection Procedure**
   - A. Make a scan of the inspection areas identified in Figure 1.
     - (1) Refer to Part 6, 51-00-00, Procedure 23, paragraph 6., for the inspection procedure.

BOEING PROPRIETARY - Copyright © Unpublished Work - See title page for details

6. **Inspection Results**

A. Refer to Part 6, 51-00-00, Procedure 23, paragraph 7., for the inspection result instructions.

BOEING PROPRIETARY - Copyright © Unpublished Work - See title page for details

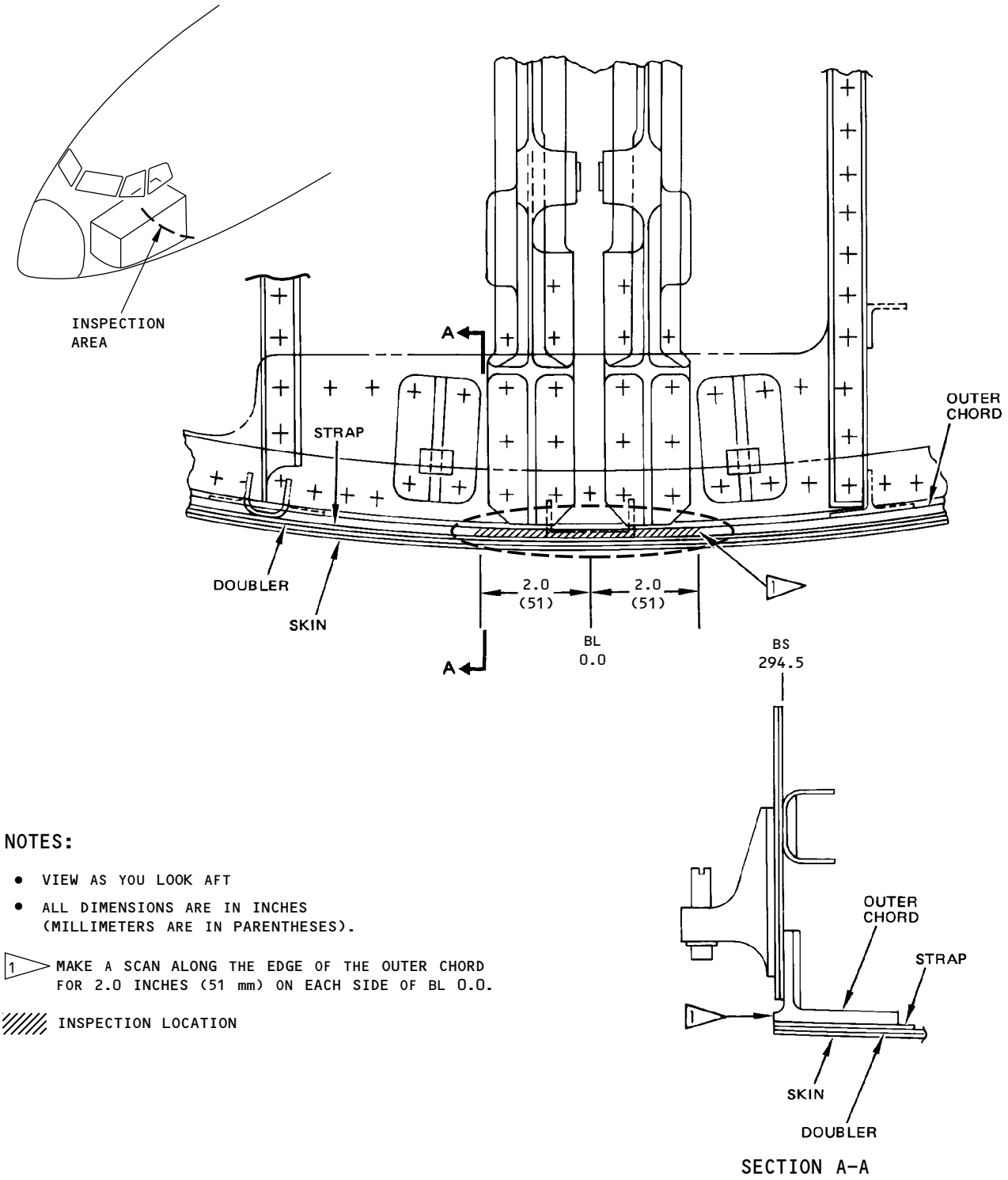

NOTES:

- VIEW AS YOU LOOK AFT
- ALL DIMENSIONS ARE IN INCHES (MILLIMETERS ARE IN PARENTHESES).

1 MAKE A SCAN ALONG THE EDGE OF THE OUTER CHORD FOR 2.0 INCHES (51 mm) ON EACH SIDE OF BL 0.0.

INSPECTION LOCATION

2159194 S0000471840_V1

Bulkhead Outer Chord at BL 0.0 - BS 294.5
Figure 1

BOEING PROPRIETARY - Copyright © Unpublished Work - See title page for details

PART 6 - EDDY CURRENT

AFT CARGO DOOR CUTOUT TEAR STRAP (LFEC)

1. **Purpose**

   A. To detect cracks in the tear strap at fastener holes common to forward and aft frames and around periphery of aft cargo door cutout using low frequency eddy current.

   B. 737 Supplemental Structural Inspection Document (D6-37089) Reference:

      (1) Item: F-11

2. **Equipment**

   A. Any eddy current instrument and probe combination that satisfies performance requirements of this procedure is suitable for this inspection. The following equipment was used in development of this procedure.

      (1) Instrument - Eddy current instrument capable of operating at 700 and 1200 Hz.

         (a) MIZ-10 or MIZ-10A; Zetec Inc.

      (2) Probe - Spot probe 0.50 inch (1.27 cm) OD used at 700 and 1200 Hz.

         (a) P/N SPO-565A; Nortec, Inc.

      (3) Reference Standards - Manufacture Reference Standards 320 and 321 per Figure 2 and Figure 3, or procure P/N 6412-164 and P/N 6412-176 from Ideal Specialty Co.

         NOTE: Refer to Part 1, 51-01-00, for information on equipment manufacturers.

3. **Prepare for the Inspection**

   A. Remove cargo door scuff plate.

   B. Clean inspection surface.

4. **Instrument Calibration**

   NOTE: Calibration is required for each inspection code. An inspection code is used to identify fasteners which have similar inspection conditions.

   A. Calibrate for detection of cracks between fasteners and from edge of cutout using spot probe.

      (1) Connect probe and set frequency per Figure 1.

      (2) Select proper reference standard per Figure 1 and place probe at Position 1, Figure 4. Manipulate probe until minimum meter reading is obtained.

      (3) Balance instrument per manufacturer's instructions.

      (4) Adjust liftoff control per manufacturer's instructions to obtain the same response when the probe is on the bare standard as with the probe lifted off the part by 0.006 inch (approximately the thickness of two sheets of paper).

         NOTE: The probe is located at Position 1 during liftoff calibration.

      (5) Keep the probe at Position 1 and use the meter position control to adjust meter response to indicate 20% of full scale.

      (6) Position or scan probe over the notched portion of the reference standard. Meter response should be upscale. Refer to Probe Position 2 of Figure 4.

BOEING PROPRIETARY - Copyright © Unpublished Work - See title page for details

(7) Adjust instrument sensitivity to obtain 70% of full scale meter response, or 50% of full scale meter response difference between the notched and unnotched locations. (Position 1 and 2.)

(8) Reposition probe at Position 1 and recheck balance and liftoff. If readjustments are made, recheck sensitivity per Paragraph 4.A.(6) and Paragraph 4.A.(7).

(9) Cracks will be indicated by a higher meter response.

5. Inspection Procedure

A. Inspection for cracks between fastener holes and from edge of cutout using low frequency eddy current spot probe.

(1) Calibrate instrument per Paragraph 4.

(2) Establish baseline reponse for acceptable crack-free area by comparing minimum of two locations on each frame and sill location.

(a) Select representative location from this group and set its response to 20% of full meter scale.

NOTE: Do not change instrument sensitivity when establishing the aircraft baseline response.

(b) Refer back to this location periodically to ensure that instrument response is same as originally recorded.

NOTE: Changes in meter response may occur as a result of instrument drift or probe temperature change.

(3) Inspect per Figure 5.

6. Inspection Results

A. Any location that gives a minimum response of 30% of full meter scale above the established baseline response is a potential crack indication and should be investigated further.

(1) The following conditions may cause meter reading changes similar to crack indications:

(a) A decrease in fastener spacing - Compare with similarly spaced fasteners on the airplane.

(b) Close edge of skin or subsurface structure - Check drawings in the specific inspection procedure and compare with a similar location on the airplane.

(c) Difference in conductivity between skin panels - Compare only inspection locations common to a skin panel.

(d) Placing or scanning probe too close to a magnetic steel fastener - Compare the response obtained with the probe near a similar fastener, or by scanning the probe around the fastener at a constant distance away from it.

(e) Magnetic metal chips in paint - Remove paint and inspect.

(f) Difference in fastener material (magnetic versus non magnetic) - confirm by using a permanent magnet to determine the magnetic properties of the fasteners. If fastener material is different, complete recalibration is required. Remove and replace fasteners in reference standard with the same type of fastener as found in the aircraft and recalibrate. Contact the Boeing Commercial Airplane Company for further instructions.

(2) When investigating crack-like indications, compare meter responses obtained at the same location on another airplane of the same configuration.

(3) A downscale (lower) meter reading is an indication of metal thickening which indicates probe is over a beam chord or stiffener flange.

BOEING PROPRIETARY - Copyright © Unpublished Work - See title page for details

INSPECTION AREA (SEE FIGURE 5 FOR FLAGNOTES)	REFERENCE STANDARD NO.	INSTRUMENT FREQUENCY (Hz)
1	320	1200 Hz
2	321	700 Hz

2159196 S0000471847_V2

Calibration Table
Figure 1

BOEING PROPRIETARY - Copyright © Unpublished Work - See title page for details

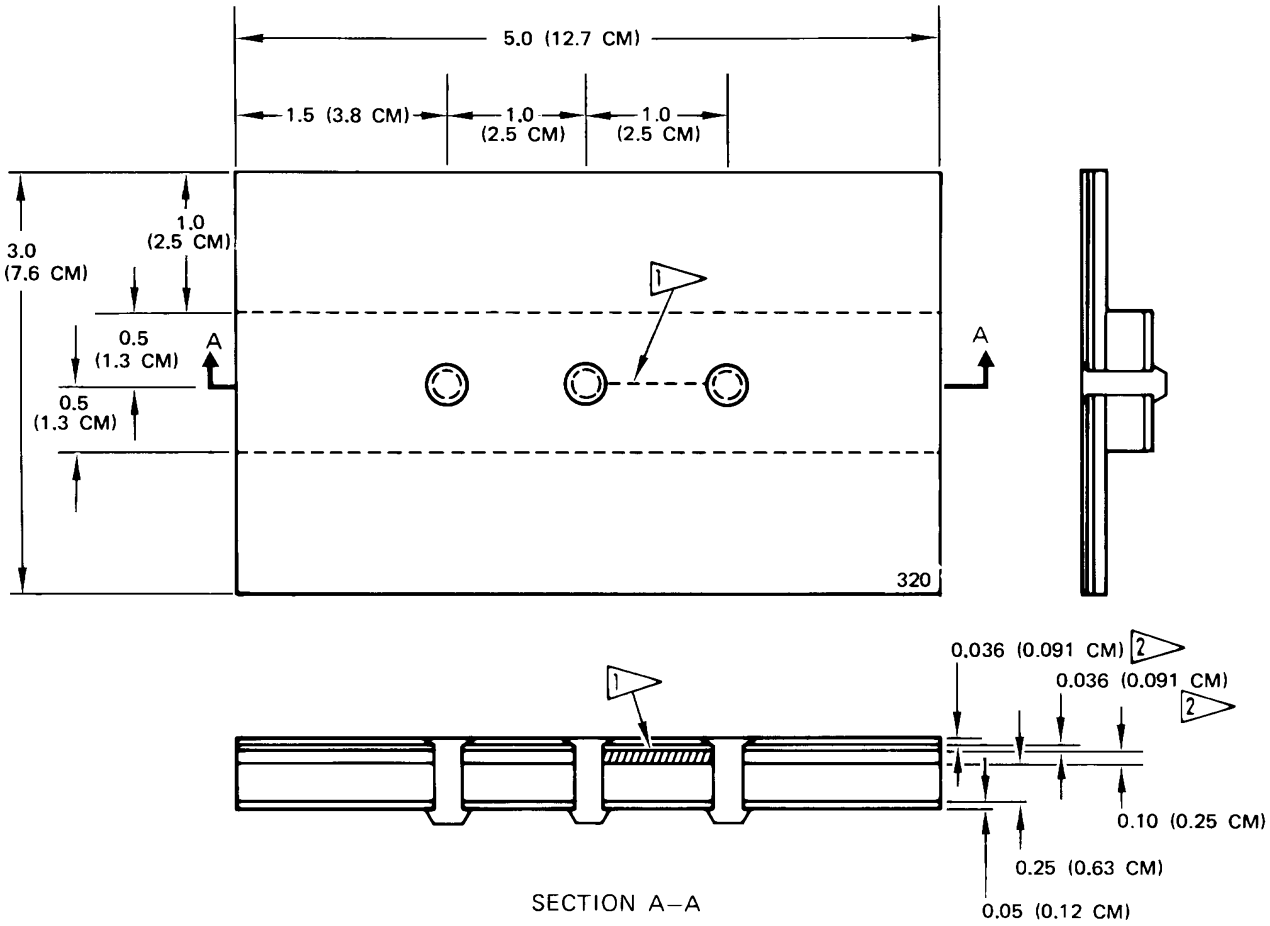

NOTES

- ALL DIMENSIONS ARE IN INCHES (CENTIMETERS IN PARENTHESES)
- TOLERANCE: X.X ± 0.05 (0.13 CM), X.XX ± 0.02 (0.05 CM), X.XXX ± 0.005 (0.013 CM)
- MATERIAL: 2024–T3 OR –T4 ALUMINUM
- FASTENERS: BACB30GY6A8 BOLTS, BACC30K6 COLLARS
- ETCH OR STEEL STAMP WITH 320
- P/N 6412–164 AVAILABLE FROM IDEAL SPECIALTY CO.

1 JEWELER'S SAWCUT 0.030 (0.08 CM) MAX WIDTH

2 A SINGLE 0.071 (0.180 CM) MEMBER MAY BE SUBSTITUTED FOR THE 0.036 (0.091 CM) MEMBERS

2159198 S0000471849_V1

Reference Standard 320
Figure 2

BOEING PROPRIETARY - Copyright © Unpublished Work - See title page for details

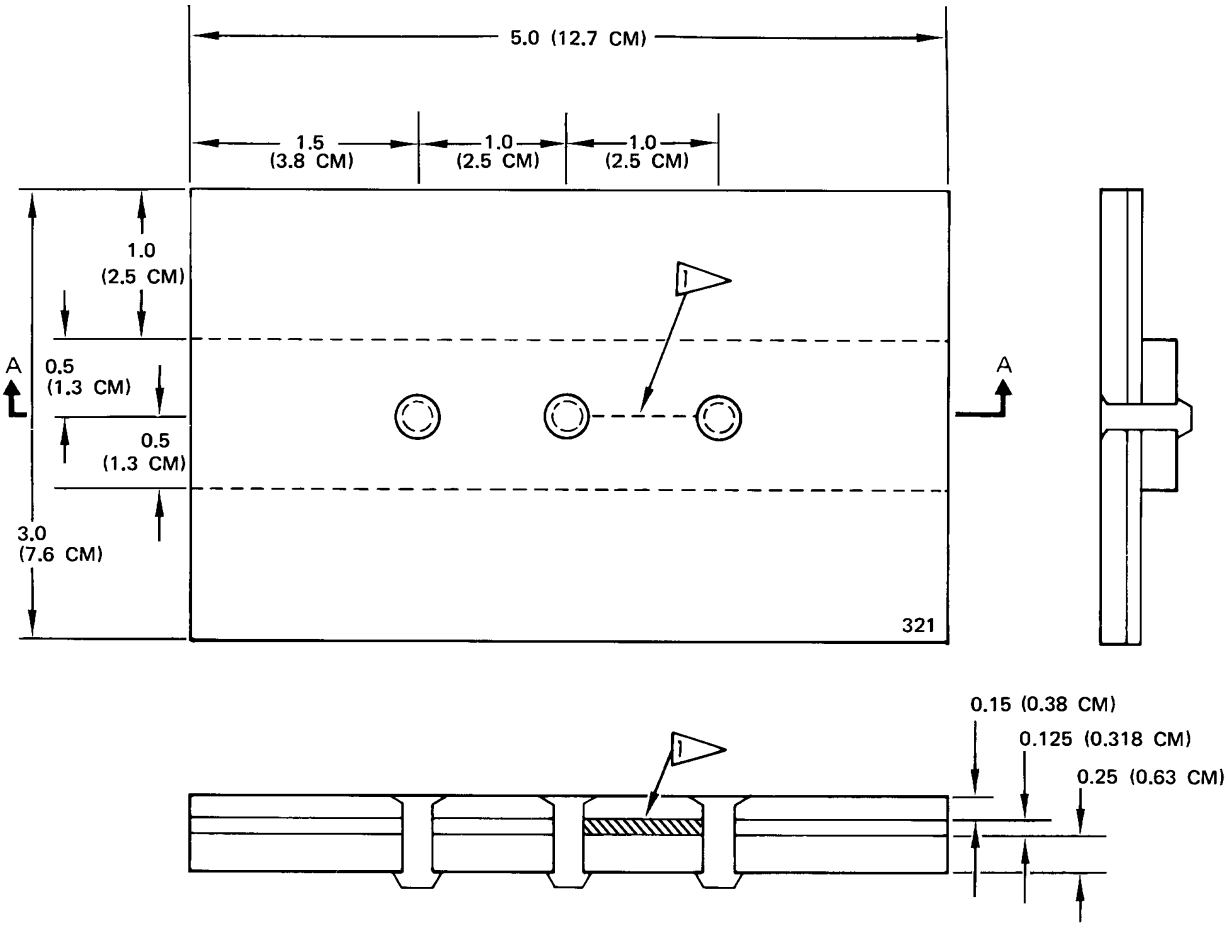

NOTES

- ALL DIMENSIONS ARE IN INCHES (CENTIMETERS IN PARENTHESES)
- TOLERENCE: X.X ± 0.05 (0.13 CM), X.XX ± 0.02 (0.05 CM), X.XXX ± 0.005 (0.013 CM)
- MATERIAL: 2024–T3 OR T4 ALUMINUM
- FASTENERS: BACB30GY6A8 BOLTS, BACC30K6 COLLARS
- ETCH OR STEEL STAMP WITH 321
- P/N 6412–176 AVAILABLE FROM IDEAL SPECIALTY CO.

1 JEWELER'S SAWCUT 0.030 (0.08 CM) MAX WIDTH

2159199 S0000471851_V1

Reference Standard 321
Figure 3

BOEING PROPRIETARY - Copyright © Unpublished Work - See title page for details

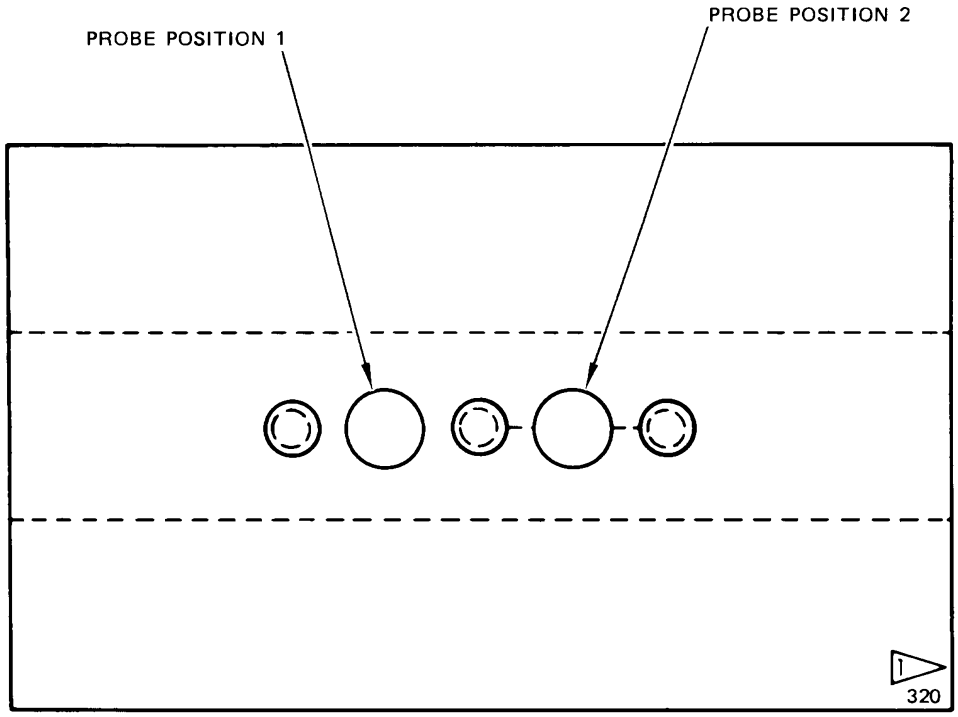

NOTE

1 PROBE POSITIONS APPLICABLE TO REFERENCE STANDARDS 320 AND 321

2159202 S0000471853_V1

Probe Calibration Positions on Reference Standards 320 and 321
Figure 4

BOEING PROPRIETARY - Copyright © Unpublished Work - See title page for details

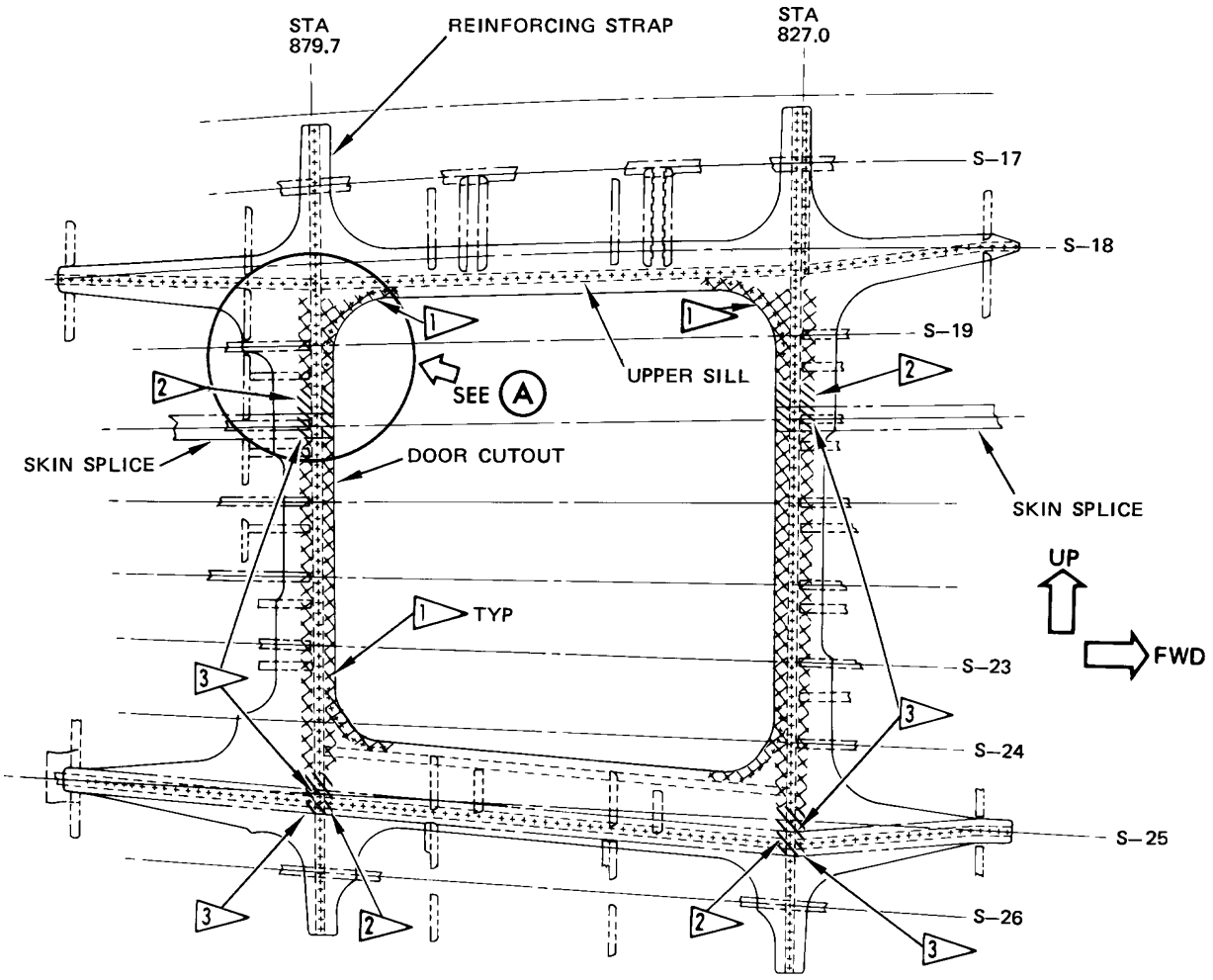

NOTES

- AFT CARGO DOOR CUTOUT APPLICABLE TO 737–100 AIRCRAFT, 737–200 SIMILAR

1 PLACE PROBE ON SKIN AND SCAN PER

2 PLACE PROBE ON SKIN AND SCAN PER

3 CAUTION – THE EDGES OF THE SKIN SPLICE WILL CAUSE A CRACK LIKE INDICATION

2159204 S0000471856_V1

Aft Cargo Door Cutout Tear Strap
Figure 5 (Sheet 1 of 2)

BOEING PROPRIETARY - Copyright © Unpublished Work - See title page for details

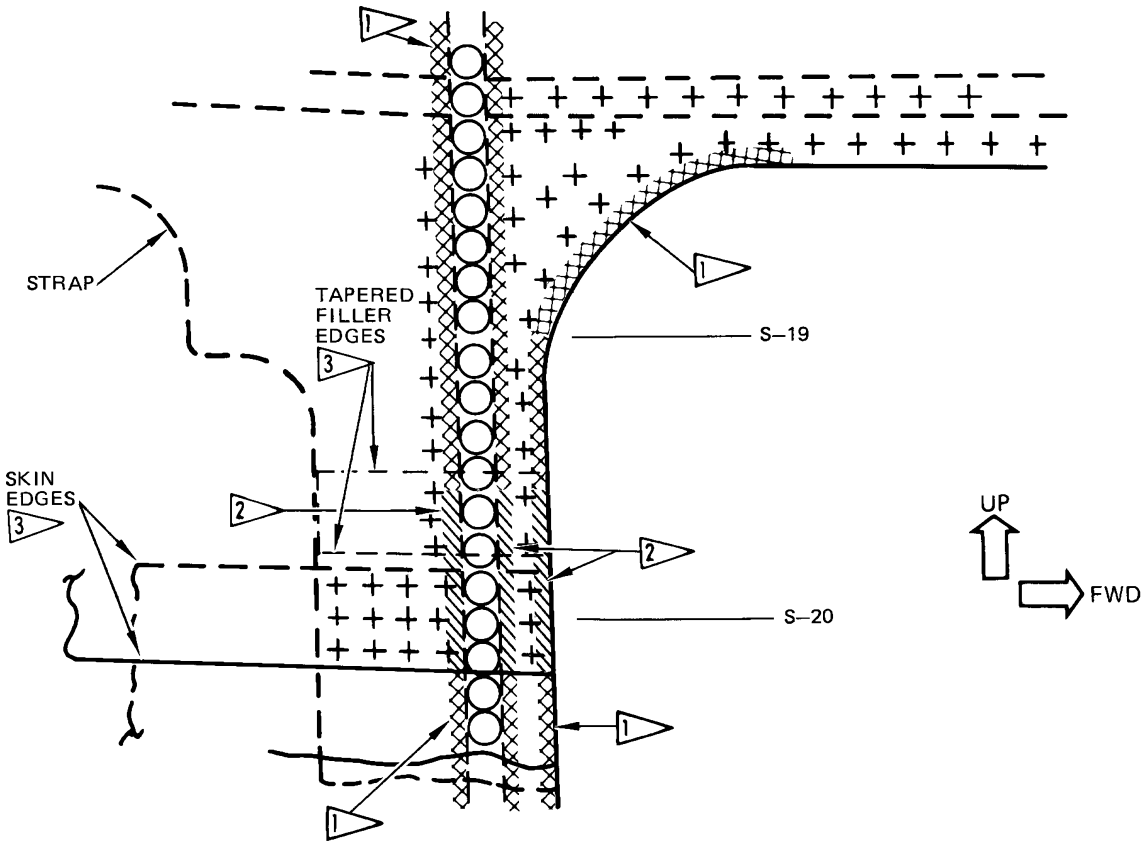

TYPICAL SKIN LAP AND TAPERED FILLER AREA

(A)

NOTES

- AFT CARGO DOOR CUTOUT APPLICABLE TO 737–100 AIRCRAFT, 737–200 SIMILAR

1 PLACE PROBE ON SKIN AND SCAN PER

2 PLACE PROBE ON SKIN AND SCAN PER

3 THE EDGES OF THE SKIN SPLICE WILL CAUSE A CRACK LIKE INDICATION

2159205 S0000471857_V1

Aft Cargo Door Cutout Tear Strap
Figure 5 (Sheet 2 of 2)

BOEING PROPRIETARY - Copyright © Unpublished Work - See title page for details

PART 6 - EDDY CURRENT

AFT CARGO DOOR CUTOUT FRAMES

1. **Purpose**

   A. Use this procedure to do a surface eddy current inspection to find cracks in the frames at BS 794.3 and BS 847, between the upper and lower sills of the aft lower cargo door. See Figure 1 for the inspection areas.

   B. Use this procedure to examine the cutout of the aft lower cargo door in the inspection areas that follow:

      (1) Toe of the inner chord of the frame at the frame-to-sill intersection of the upper and lower sills.

      (2) Heel of the inner and outer chords of the frame at all the (10) doorstop locations.

   C. This procedure uses an instrument with an impedance plane display or a meter display.

   D. 737 Supplemental Structural Inspection Document (D6-37089 for -100/-200/-200C airplanes; D6-82669 for -300/-400/-500 airplanes) Reference:

      (1) Item: F-11B

2. **Equipment**

   A. General

      (1) Use inspection equipment that can be calibrated on the reference standard as specified in Paragraph 4.

      (2) Refer to Part 1, 51-01-00, for data about the equipment manufacturers.

   B. Instrument, Probes and Reference Standard

      (1) Refer to Part 6, 51-00-00, Procedure 4 (if a meter display instrument is used) or Part 6, 51-00-00, Procedure 23 (if an impedance plane display instrument is used) for instrument, probe and reference standard instructions to do this inspection.

      NOTE: It can be necessary to use a 0.0625 inch (1.59 mm) diameter probe because of the small space available for the probe tip to fit into the inspection areas.

      (2) The probe used to help prepare this procedure was an MMP902-50 which is made by the NDT Engineering Corp.

3. **Prepare for the Inspection**

   A. Identify the inspection areas. See Figure 1.

   B. Remove the interior cargo bay liners, insulation blankets and scuff plate to get access to the inspection areas.

   C. Clean the inspection area. Remove sealant if necessary. Remove paint only if it is loose.

4. **Instrument Calibration**

   A. Calibrate the instrument as specified in Part 6, 51-00-00, Procedure 4 (if meter display instrument is used) or Part 6, 51-00-00, Procedure 23 (if an impedance plane display instrument is used).

5. **Inspection Procedure**

   A. Calibrate the instrument as specified in Paragraph 4.

   B. Do a scan inspection of the inspection areas identified in Figure 1.

BOEING PROPRIETARY - Copyright © Unpublished Work - See title page for details

(1) For instruments with a meter display, refer to Part 6, 51-00-00, Procedure 4, paragraph 6, for the inspection procedure. Refer to paragraph 6.D.(5) to examine near the edges.

(2) For instruments with an impedance plane display, refer to Part 6, 51-00-00, Procedure 23, paragraph 6 for the inspection procedure. Refer to paragraph 6.E.(3)(e) to examine near the edges.

6. Inspection Results

A. Refer to the applicable inspection procedure for data to help make an analysis of the inspection results.

BOEING PROPRIETARY - Copyright © Unpublished Work - See title page for details

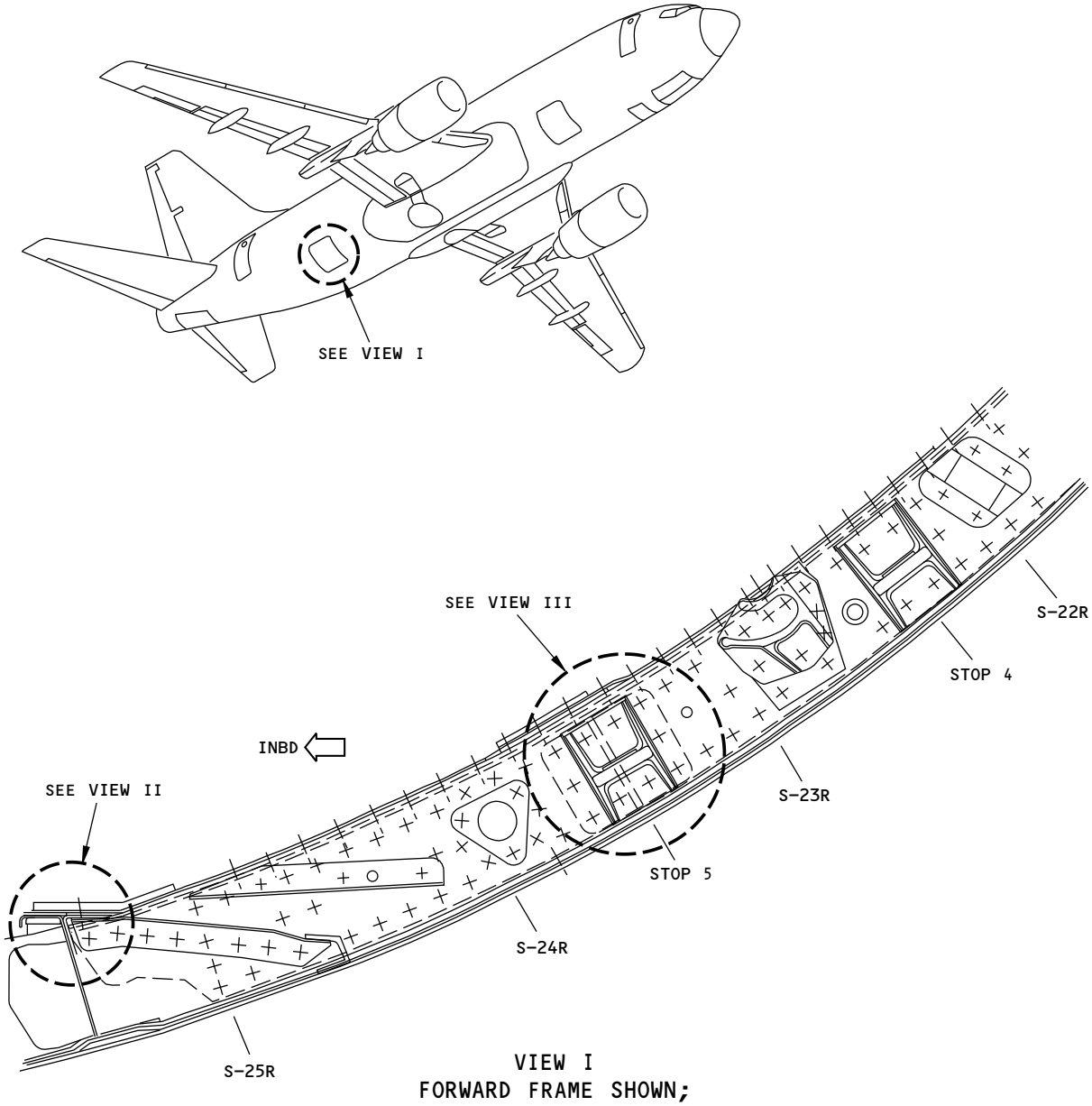

VIEW I
FORWARD FRAME SHOWN;
AFT FRAME OPPOSITE

NOTES:

- THE INSPECTION AREAS ARE THE INNER AND OUTER CHORDS OF THE FORWARD AND AFT FRAMES AT THE TEN DOOR STOP LOCATIONS AND THE UPPER AND LOWER SILL LOCATIONS. NOT ALL LOCATIONS ARE SHOWN IN VIEW I, ONLY TYPICAL LOCATIONS. SEE VIEWS II AND III FOR THE INSPECTION AREAS.

2159276 S0000471861_V1

Aft Cargo Door Cutout Frames
Figure 1 (Sheet 1 of 2)

BOEING PROPRIETARY - Copyright © Unpublished Work - See title page for details

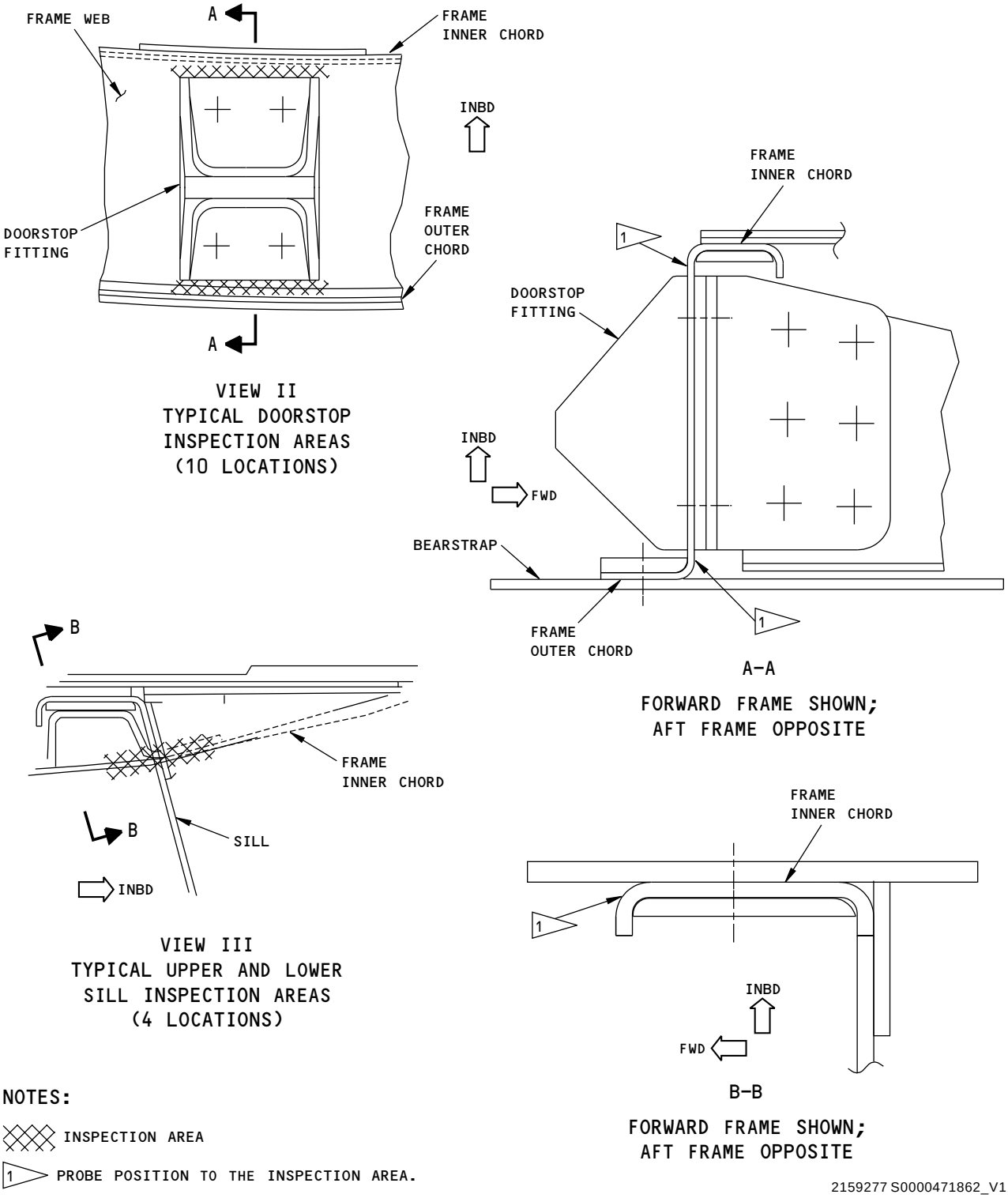

Aft Cargo Door Cutout Frames
Figure 1 (Sheet 2 of 2)

BOEING PROPRIETARY - Copyright © Unpublished Work - See title page for details

PART 6 - EDDY CURRENT

BULKHEAD FAIL-SAFE CHORD AND STRAP - BS 727.0 (LFEC)

1. Purpose

A. To find cracks in the skin flange side of the BS 727 bulkhead fail-safe chord that is behind the stringer tie at stringer locations S-20L to S-22L and S-20R to S-22R.

B. To find cracks in the BS 727 bulkhead fail-safe strap that is behind the stringer tie at stringer locations S-23L to S-25L and S-23R to S-25R.

C. The inspections are done between the two fasteners that go through the stringer tie and the fail-safe chord or the stringer tie and the fail-safe strap.

D. This procedure uses low frequency eddy current.

E. 737 Supplemental Structural Inspection Document (D6-37089 and D6-82669) Reference:

(1) Item: F-29B

2. Equipment

A. Use an eddy current instrument and probe that can be calibrated as specified in this procedure.

(1) Instrument - Use an eddy current instrument that can operate at frequencies between 3 and 5 kHz. The instruments that follow were used to help prepare this procedure.

(a) Miz - 10 or Miz 10 A

(b) Staveley NDT 19 or 19E

(c) Hocking Phasec 2

(2) Probe - Use a shielded spot probe that can operate at frequencies between 3 and 5 kHz and has an outer diameter of 0.32-inch (16 mm) or less. A 90 degree probe can be necessary to access some of the stringer ties that are adjacent to vertical stiffeners. The probes that follow were used to help prepare this procedure.

(a) VMR102FX-5/16X7; VM Products

(b) NEC-4088-1; NDT Engineering Corporation

(c) SPO-5327; Staveley NDT Technology

(3) Reference Standards – Use reference standard NDT322A as shown in Figure 1.

3. Prepare for the Inspection

A. Get access through the aft cargo compartment.

B. Remove the floor panels, cargo liners and insulation blankets in the inspection area.

C. Make sure that the area is clean and free of loose paint, sealant, dirt, grease, and other unwanted materials.

4. Instrument Calibration

A. Connect the probe and set the instrument to a frequency between 3 and 5 kHz.

B. If the inspection surface has a thick paint buildup (more than 0.003 inch), put a layer of non-conductive material on the reference standard in the area between the fasteners at probe Position 1 and probe Position 2 (see Figure 2). The thickness of the non-conductive material must be equivalent (±0.003 inch) to the actual paint thickness on the inspection surface.

BOEING PROPRIETARY - Copyright © Unpublished Work - See title page for details

C. Put the probe on the reference standard so that the side of the probe touches the fastener at Position 1 (see Figure 2).

D. Balance the instrument as specified in the manufacturer's instructions.

E. Set the balance point to 20 percent of the display height.

F. Adjust for lift-off as specified in the manufacturer's instructions.

NOTE: The probe is at Position 1 during the lift-off calibration.

(1) When the probe is lifted off of the reference standard by 0.006 inch (approximately the thickness of two sheets of paper) the lift-off signal must be as follows:

(a) Less than 5% of full scale different than the signal that occurs when the probe is on the reference standard for a meter display instrument.

(b) A horizontal line that goes to the left for an impedance plane display instrument.

G. Put the probe on the reference standard so that the side of the probe touches the fastener at probe Position 2 (see Figure 2).

H. Adjust the instrument gain to get a signal that is 80 percent of the display height.

I. Put the probe back at probe Position 1 and do a check of the balance and the lift-off. If adjustments are made, do a check of the gain again with the probe at probe Position 2 as specified in Paragraph 4.H.

J. Set the instrument to alarm for signals that are 50 percent (or more) of the display height.

5. Inspection Procedure

A. Calibrate the instrument as specified in Paragraph 4.

B. Identify the standard signal that occurs on the airplane at a location without a crack as follows:

NOTE: The standard signal is the signal of a location that does not have a crack.

(1) Put the probe between, and adjacent to, the two fasteners that go through the stringer tie at four different stringer locations, and monitor the signal.

(2) Identify the location that has the smallest signal as the location of the standard signal.

(3) Balance the instrument at the location of the standard signal.

NOTE: Do not change the instrument sensitivity.

C. Examine the fail-safe chords and straps for cracks at the two fastener locations that go through the stringer ties between S-20L to S-25L and between S-20R and S-25R (see Figure 3). During the inspection:

(1) Put the probe adjacent to the two fasteners so that you examine the areas that are adjacent to the forward side of the aft fastener and the aft side of the forward fastener.

(2) Make a record of all the locations that cause a signal to occur that is 50 percent (or more) of the display height.

(3) Regularly do a calibration test on the reference standard to compare the signal you got from the notch during calibration with the signal you get from the notch of the reference standard during the inspection. Also, do a check of the instrument's balance signal at the location that you used to identify your standard signal. If the calibration is found to be unsatisfactory, calibrate the equipment again and examine all areas that were examined since the last calibration test was done.

BOEING PROPRIETARY - Copyright © Unpublished Work - See title page for details

6. **Inspection Results**

A. A location has a possible crack and must be examined some more if it causes a signal to occur that is 50 percent (or more) of the display height (which is 30 percent above the standard signal).

B. The conditions that follow can cause crack type signals to occur.

(1) A decrease in the space between fasteners. Compare the space between fasteners with the space between other fasteners in the inspection area.

(2) The probe is too near to the edge of the stringer cap, the radius of the stringer cap or the subsurface edge of the fail-safe strap. Examine the inspection area drawings and compare the signal with a signal from a location that is almost the same on the other side of the airplane.

(3) A difference in the thickness of the stringer tie. Examine the inspection area drawings and compare the signal with a signal from a location that is almost the same on the other side of the airplane.

(4) Magnetic metal chips in the paint. Remove the paint and examine the area again.

(5) A difference in the fastener material (magnetic or nonmagnetic). Use a magnet to identify the magnetic properties of the fasteners. If the fastener material is different on the airplane than the fastener material of the reference standard, remove and replace the fasteners in the reference standard with the same type of fastener that is on the airplane and do a complete calibration and inspection again.

C. When you examine areas that cause crack-type indications, compare the signals with the signals you get at the same location on the opposite side of the airplane or on a different airplane of the same configuration.

BOEING PROPRIETARY - Copyright © Unpublished Work - See title page for details

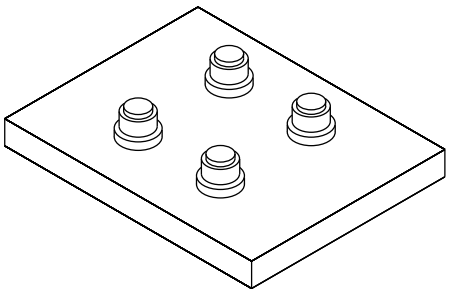

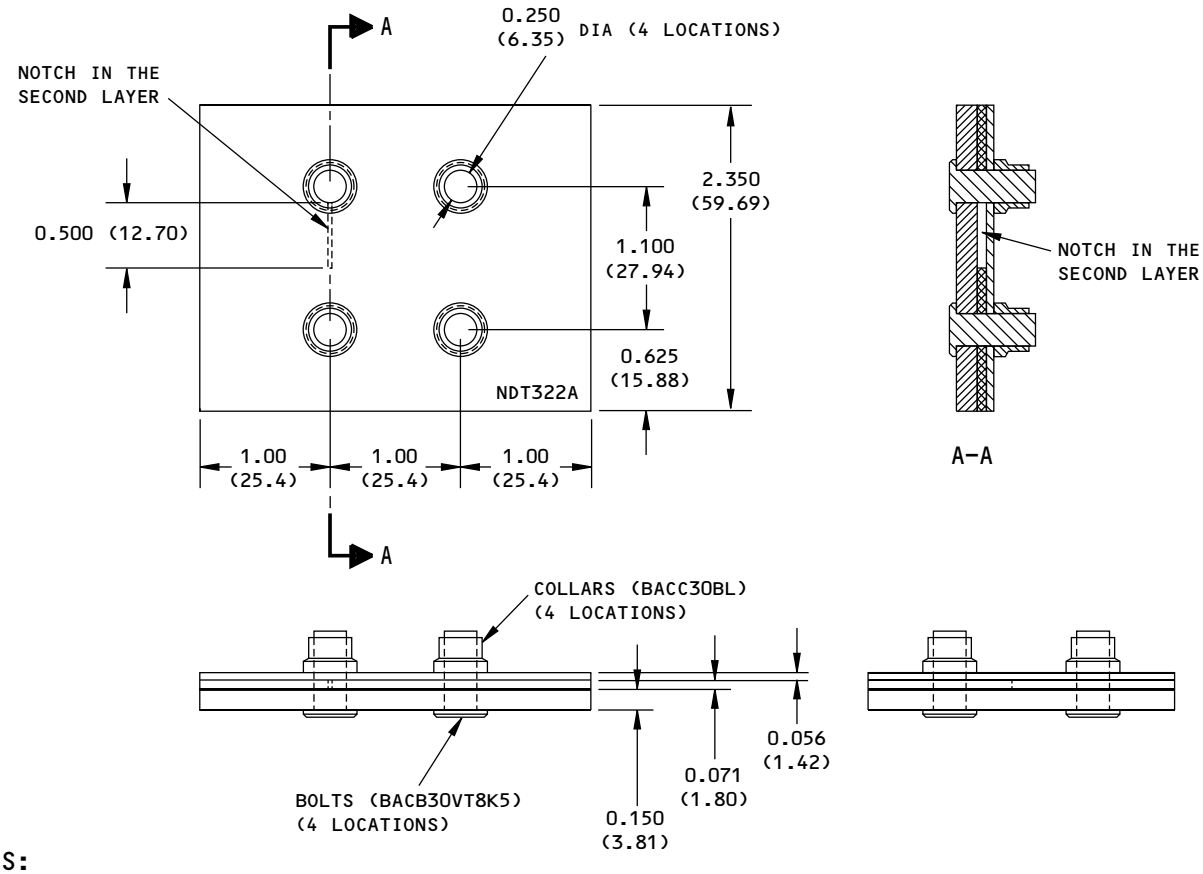

NOTES:

- ALL DIMENSIONS ARE IN INCHES (MILLIMETERS IN PARENTHESES).
- TOLERANCES (UNLESS SPECIFIED DIFFERENTLY):

INCHES	MILLIMETERS
X.XXX = ±0.005	X.XX = ±0.10
X.XX = ±0.025	X.X = ±0.5
X.X = ±0.050	X = ±1

- NOTCH: WIDTH: 0.030 (0.76) MAXIMUM
  LENGTH: 0.500 ±0.050 (12.7 ±1.3)
- MATERIAL: 7075-T6 ALUMINUM
- ETCH OR STAMP WITH NDT322A

2159278 S0000471864_V1

Reference Standard NDT322A
Figure 1

BOEING PROPRIETARY - Copyright © Unpublished Work - See title page for details

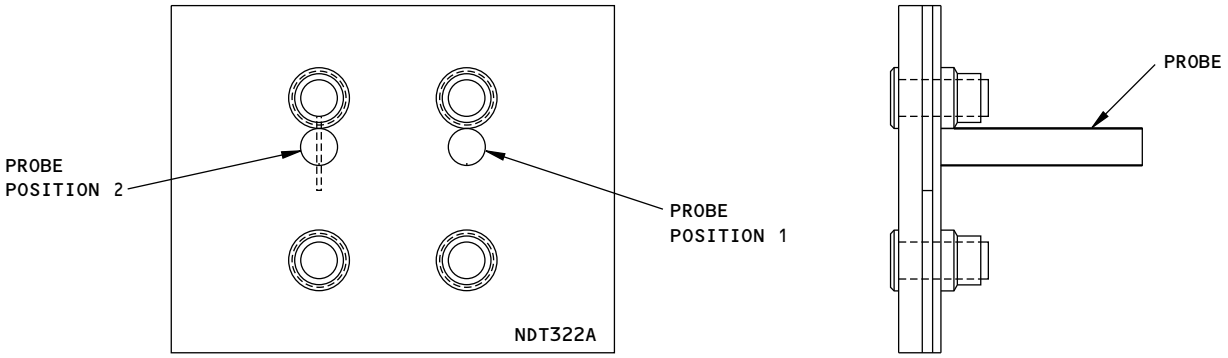

2159279 S0000471865_V1

Probe Calibration Positions on Reference Standard NDT322A
Figure 2

BOEING PROPRIETARY - Copyright © Unpublished Work - See title page for details

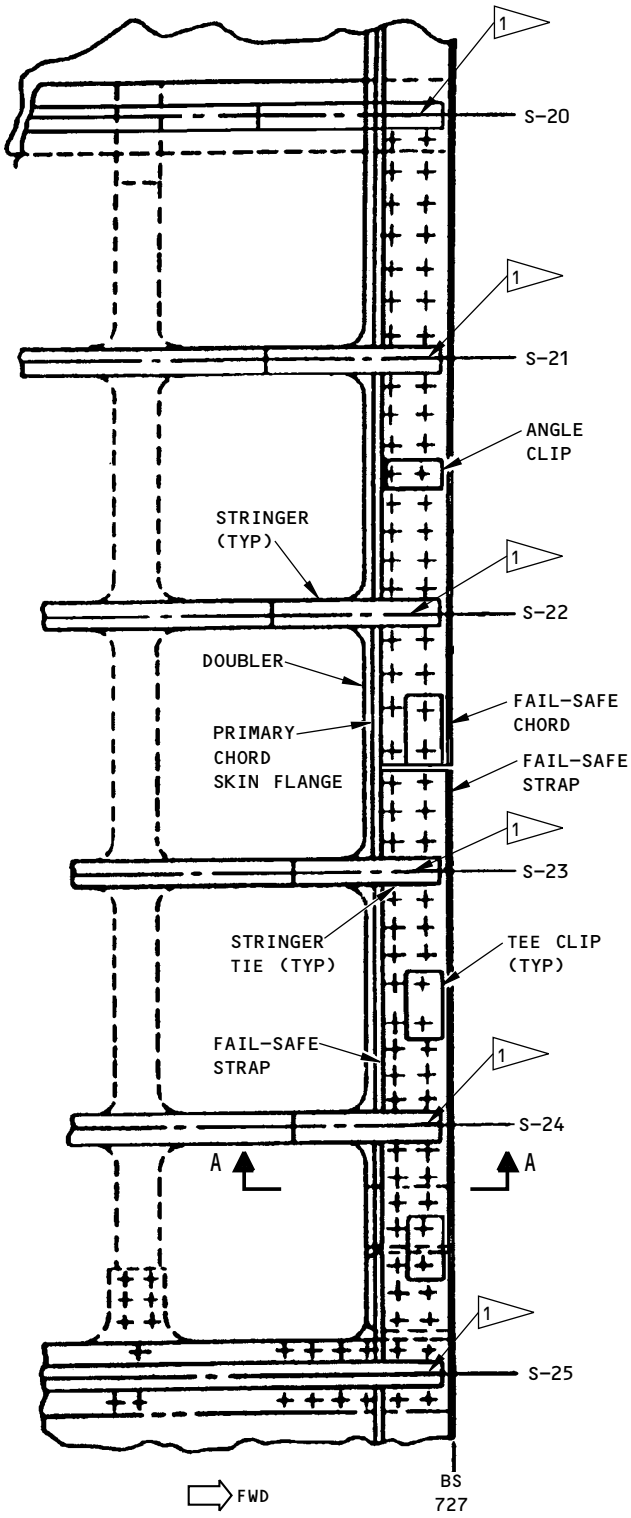

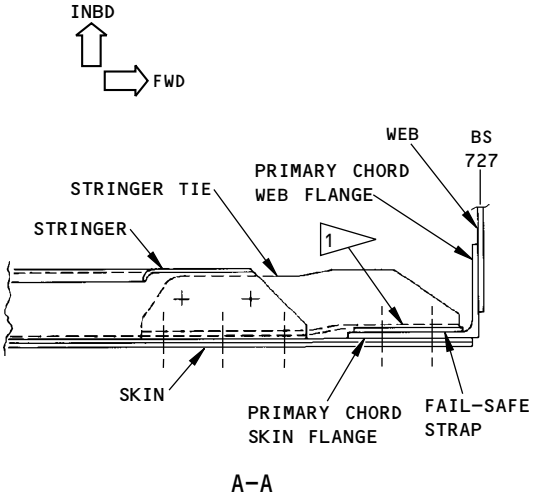

NOTES:

- THE LEFT SIDE IS SHOWN; THE RIGHT SIDE IS OPPOSITE

1 EXAMINE EACH STRINGER TIE AT TWO LOCATIONS. PUT THE PROBE ADJACENT TO THE FORWARD SIDE OF THE AFT FASTENER AND THE AFT SIDE OF THE FORWARD FASTENER.

2159281 S0000471866_V1

Inspection Area
Figure 3

BOEING PROPRIETARY - Copyright © Unpublished Work - See title page for details

PART 6 - EDDY CURRENT

BULKHEAD PRIMARY AND FAILSAFE CHORDS SKIN AND WEB FLANGES FROM STRINGER S-18L THRU S-25L AND S-18R THRU S-25R - BS 727 (HFEC)

1. Purpose

A. To detect cracks in the primary and failsafe chords of the 727 bulkhead from stringer S-18 left to stringer S-25 left and stringer S-18 right to stringer S-25 right using high frequency eddy current.

B. 737 Supplemental Structural Inspection Document (D6-37089) Reference:

(1) Item: F-29

2. Equipment

A. Any eddy current instrument and probe combination that satisfies the performance requirements of this procedure is suitable for this inspection. The following equipment was used in the development of this procedure.

(1) Instrument - ED520; Magnaflux Corp. - Refer to Part 6, 51-00-00, Procedure 4.

(2) Probe - Shielded, right-angle pencil probe per Part 6, 51-00-00, Procedure 4 with the following dimensions: 0.125 inch (0.318 cm) dia, A = 0.030 inch (0.076 cm), B = 0.155 inch (0.394 cm), C = 6.0 inches (15.2 cm).

(a) P/N MP 9003-60FX; NDT Product Engineering

B. Reference Standard - Refer to Part 6, 51-00-00, Procedure 4.

NOTE: Refer to Part 1, 51-01-00, for information on equipment manufacturers.

3. Prepare for the Inspection

A. Gain access to primary and failsafe chords through aft cargo compartment.

(1) Remove floor panels, cargo area liners and insulation blankets.

B. Gain access to forward side of primary chord through main wheel well.

(1) Remove shroud.

C. Clean inspection areas.

4. Instrument Calibration

A. Refer to Part 6, 51-00-00, Procedure 4.

5. Inspection Procedure

A. Inspect per Figure 1.

B. Perform inspection scans per Part 6, 51-00-00, Procedure 4.

6. Inspection Results

A. A rapid meter movement occurring as probe is moved over a short distance is a potential crack indication and further investigation is required.

B. Refer to Part 6, 51-00-00, Procedure 4.

BOEING PROPRIETARY - Copyright © Unpublished Work - See title page for details

2159284 S0000471868_V1

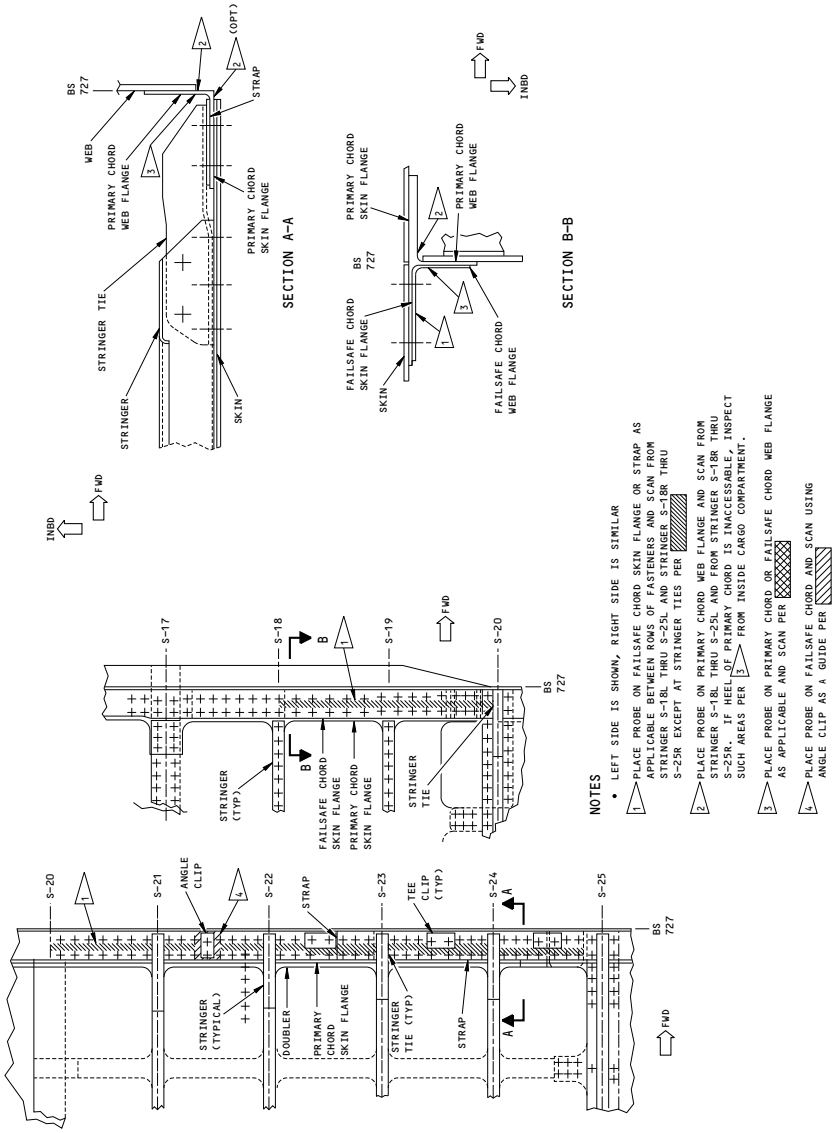

Bulkhead Primary and Failsafe Chords Skin and Web Flanges from Stringer S-18L thru S-25L and S-18R thru S-25R - BS 727
Figure 1 (Sheet 1 of 2)

BOEING PROPRIETARY - Copyright © Unpublished Work - See title page for details

2159286 S0000471869_V1

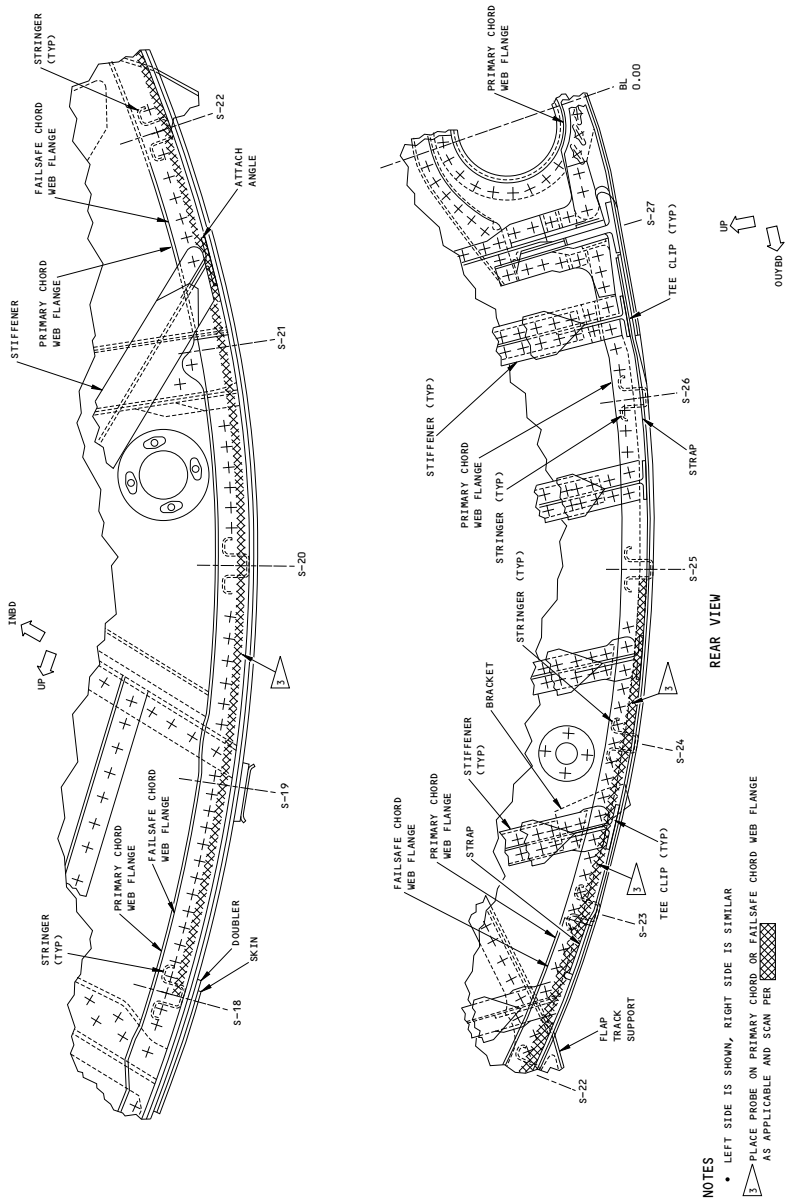

Bulkhead Primary and Failsafe Chords Skin and Web Flanges from Stringer S-18L thru S-25L and S-18R thru S-25R - BS 727
Figure 1 (Sheet 2 of 2)

BOEING PROPRIETARY - Copyright © Unpublished Work - See title page for details

PART 6 - EDDY CURRENT

AFT BULKHEAD CHORD, CHORD WEB AND DOUBLER - BS 1156 (LFEC)

1. Purpose

A. To detect cracks in aft bulkhead chord, web and doubler between aft hinge support beam chords of BS 1156 bulkhead using low frequency eddy current.

B. 737 Supplemental Structural Inspection Document (D6-37089) Reference:

(1) Item: F-32

2. Equipment

A. Any eddy current instrument and probe combination that satisfies performance requirements of this procedure is suitable for this inspection. The following equipment was used in development of this procedure.

(1) Instrument(s) capable of operating at 2 kHz:

(a) MIZ-10 or MIZ-10A; Zetec Inc.

(2) Probe(s) spot probe 0.50 inch (1.27 cm) OD used at 2 kHz:

(a) P/N SPO-1125; Nortec, Inc.

(3) Reference Standard - Manufacture Reference Standard 326 per Figure 1, or procure P/N 6412-169 from Ideal Specialty Co.

NOTE: Refer to Part 1, 51-01-00, for information on equipment manufacturers.

3. Prepare for the Inspection

A. Gain access through tailcone access door.

B. Place elevators in full up position.

C. Clean inspection areas.

4. Instrument Calibration

A. Calibration for detection of cracks between fasteners using low frequency eddy current spot probe.

(1) Connect probe and set instrument frequency at 2.0 kHz.

(2) Place probe on reference standard per Figure 2, Position 1.

(3) Balance instrument per manufacturer's instructions.

(4) Adjust liftoff control per manufacturer's instructions to obtain same response when probe is on bare standard as when probe is lifted off part by 0.006 inch (approximately the thickness of two sheets of paper.

NOTE: The probe is located at Position 1 during liftoff calibration.

(5) Keep probe at Position 1 and use meter position control to adjust meter response to indicate 20% of full scale.

(6) Position or scan probe over notched portion of reference standard. Meter response should be upscale. Refer to Probe Position 2 in Figure 2.

(7) Adjust instrument sensitivity to obtain 70% of full scale, or 50% of full scale meter response difference between notched and unnotched locations (Positions 1 and 2).

BOEING PROPRIETARY - Copyright © Unpublished Work - See title page for details

(8) Reposition probe at Position 1 and recheck balance and liftoff. If readjustments are made, recheck sensitivity per Paragraph 4.A.(6) and Paragraph 4.A.(7).

(9) Cracks will be indicated by a higher meter response.

5. Inspection Procedure

A. Inspection for detection of cracks between fasteners using low frequency eddy current spot probe.

(1) Calibrate instrument per Paragraph 4.

(2) Establish airplane baseline response for an acceptable crackfree location by comparing a minimum of two locations on each side of aircraft:

(a) Select a representative location from this group and set its response to 20% of full meter scale.

NOTE: The areas recommended for baseline responses are 1.0 inch (2.5 cm) and 7.5 inches (19.1 cm) down from the elevator hinge fitting and 1.5 inches (3.8 cm) above the fasteners common to the bulkhead chord and lower deck stiffener.

NOTE: Do not change instrument sensitivity when establishing the airplane baseline response.

(b) Refer back to this location periodically to ensure that instrument response is the same as originally recorded. (Changes in meter response may occur as a result of instrument drift or probe temperature change).

(3) Inspect per Figure 3.

6. Inspection Results

A. Any location that gives a minimum response 30% of full meter scale above the established baseline response is a potential crack indication and should be investigated further.

NOTE: The following conditions may cause meter reading changes similar to crack indications:

(1) A decrease in fastener spacing - Compare with similarly spaced fasteners on the airplane or on the reference standard.

(2) Placing probe to close to edge of skin or subsurface structure - Check drawings in the specific inspection procedure and compare with a similar location on the airplane.

(3) Differences in conductivity between skin panels - Compare only inspection locations common to a skin panel.

(4) Placing or scanning the probe too close to a magnetic steel fastener - Compare the response obtained with the probe placed near a similar fastener at a constant distance away from it.

(5) Magnetic chips in paint - Remove paint and reinspect.

(6) Difference in fastener material (magnetic versus non magnetic) - confirm by using a permanent magnet to determine the magnetic properties of the fasteners. If fastener material is different, complete recalibration is required. Remove and replace fasteners in reference standard with the same type of fastener as found in the aircraft and recalibrate. Contact the Boeing Commercial Airplane Company for further instructions.

B. When investigating crack-like indications, compare meter responses obtained at the same location on the opposite side of the airplane or at the same location on another airplane of the same configuration.

C. A downscale (lower) meter reading is an indication of metal thickening which indicates probe is over a beam chord or stiffener flange.

BOEING PROPRIETARY - Copyright © Unpublished Work - See title page for details

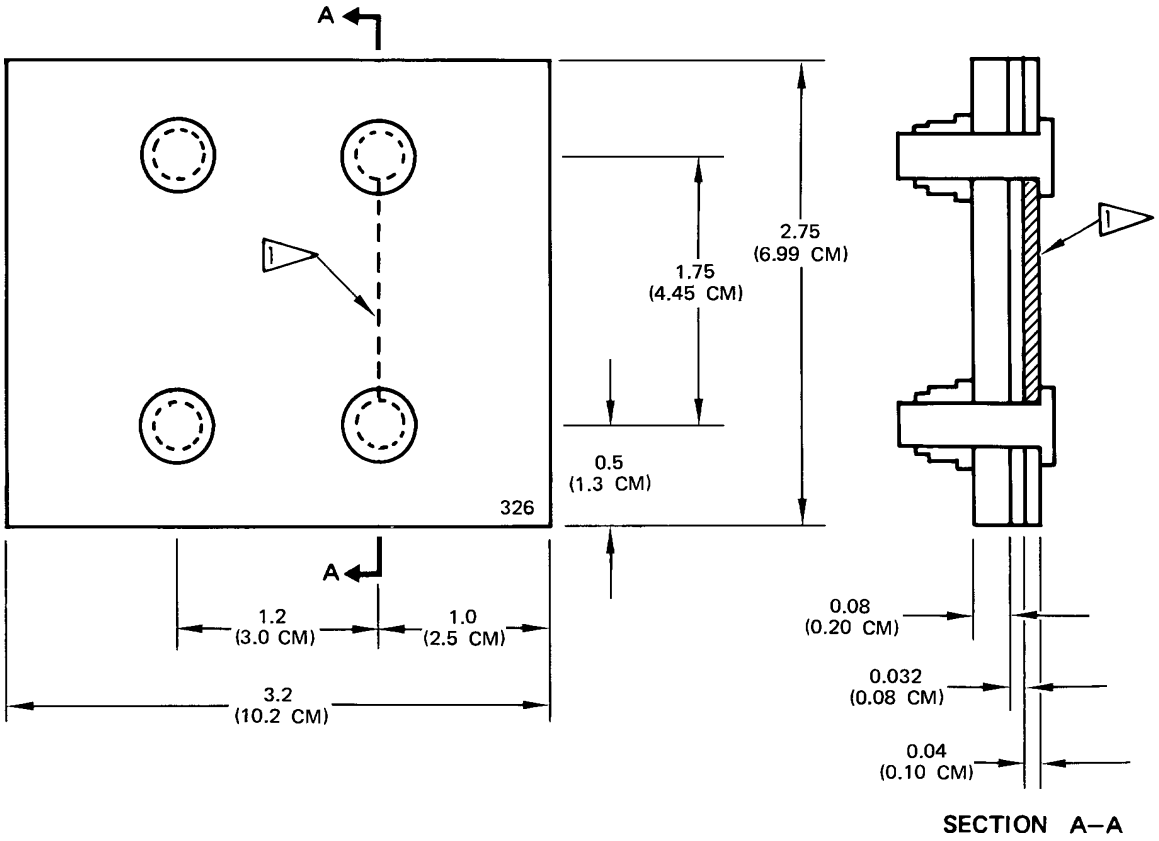

NOTES

- ALL DIMENSIONS ARE IN INCHES (CENTIMETERS IN PARENTHESES)
- TOLERANCE: X.X ± 0.05 (0.13 CM), X.XX ± 0.02 (0.05 CM), X.XXX ± 0.005 (0.013 CM)
- MATERIAL: 7075–T6 ALUMINUM
- FASTENERS: BACB30DX8–3 BOLTS AND NAS1080 COLLARS (4 PLACES)
- ETCH OR STEEL STAMP WITH 326
- P/N 6412–169 AVAILABLE FROM IDEAL SPECIALTY CO.

1 JEWELER'S SAWCUT 0.030 (0.08 CM) MAX WIDTH

2159288 S0000471871_V1

Reference Standard 326
Figure 1

BOEING PROPRIETARY - Copyright © Unpublished Work - See title page for details

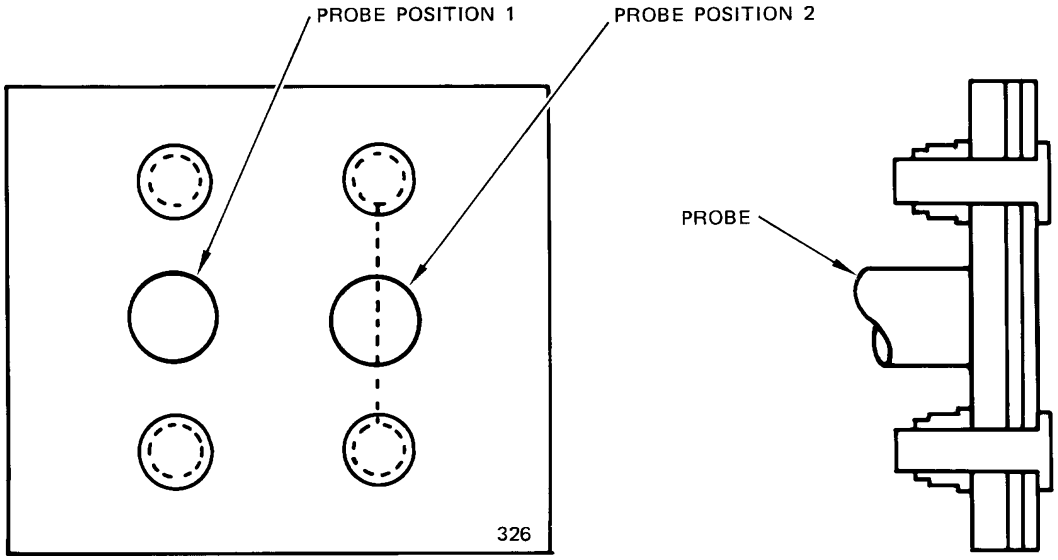

2159292 S0000471872_V1

Probe Calibration Positions for Reference Standard 326
Figure 2

BOEING PROPRIETARY - Copyright © Unpublished Work - See title page for details

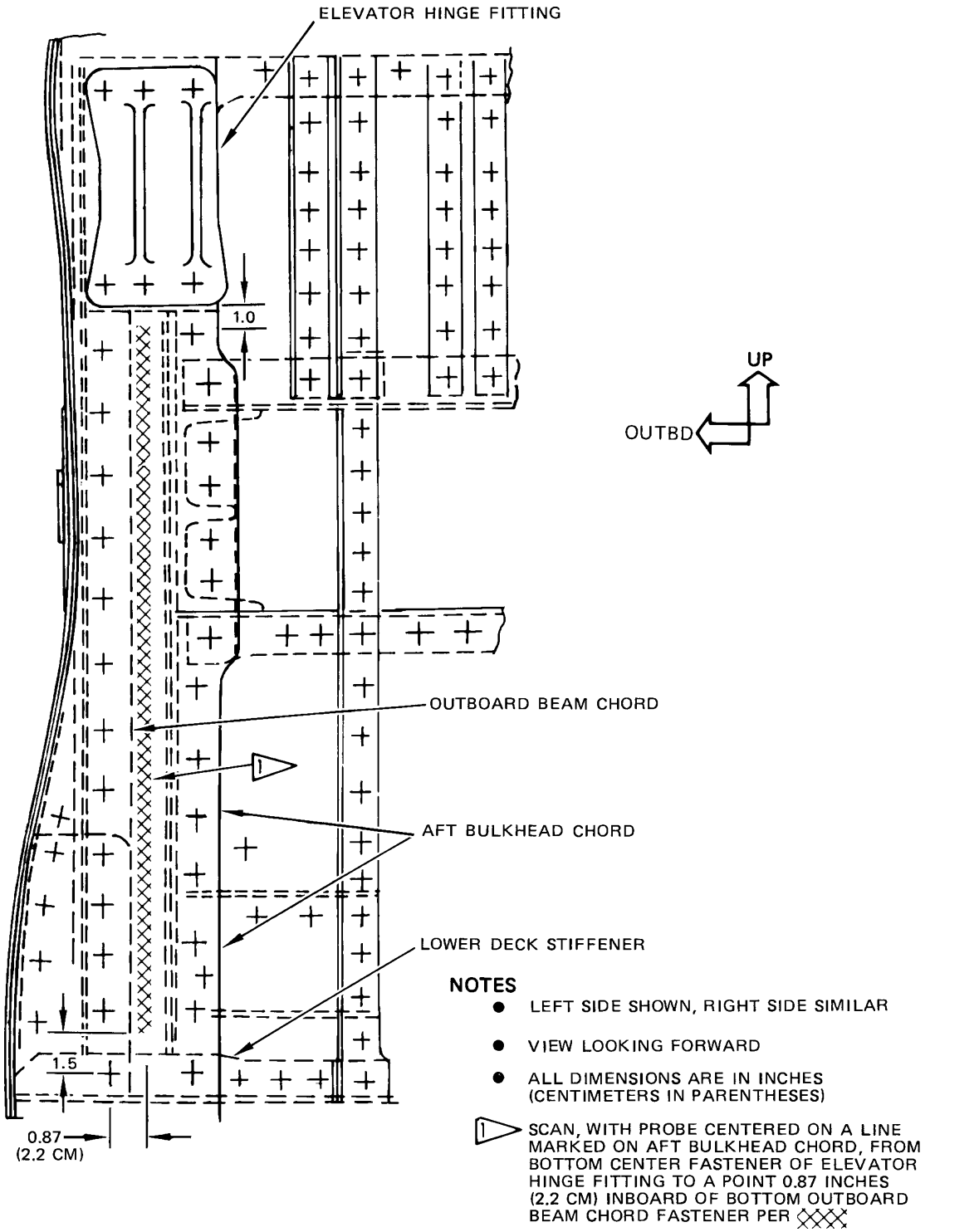

Aft Bulkhead Chord, Chord Web and Doubler - BS 1156
Figure 3

BOEING PROPRIETARY - Copyright © Unpublished Work - See title page for details

PART 6 - EDDY CURRENT

FORWARD AND AFT CARGO DOOR CUTOUTS (LFEC)

1. **Purpose**

   A. To inspect cracks in the bear strap, upper sill inner and outer chord, and frame inner chord at the forward cargo door cutout, using low frequency eddy current.

   NOTE: This inspection is intended to detect cracks in the structures listed above. However, technique A of this procedure will also detect cracks in the frame outer chords at the forward and aft sides of the door cutout.

   B. Service Bulletin Reference: 737-53A1228

   C. 737 Supplemental Structural Inspection Document (D6-37089) Reference:

      (1) Item: F-10

2. **Equipment**

   A. Any eddy current instrument and probe combination that satisfies the performance requirements of this procedure is suitable for this inspection. The following equipment was used in the development of this procedure.

      (1) Instrument - Eddy current instrument capable of operating at 1.0 to 2.0 kHz.

         (a) MIZ-10 or MIZ-10A; Zetec Inc.

      (2) Probe - Ring probe 0.30-inch (0.76 cm) ID, 0.75-inch (1.91 cm) OD

         (a) P/N SPO 996; Nortec Inc.

      (3) Probe - Spot probe 0.50-inch (1.2 cm) OD

         (a) P/N SPO 1391; Nortec Inc.

      (4) Reference Standard - Manufacture Reference Standard 335 per Figure 3.

      NOTE: Refer to Part 1, 51-01-00, for information on equipment manufacturers.

3. **Prepare for the Inspection**

   A. Clean surfaces of inspection area and remove loose paint.

4. **Instrument Calibration**

   A. Calibration for fastener hole crack inspection using inspection technique A.

      (1) Connect ring probe (P/N SPO 996) and set instrument frequency to 1.0 kHz.

      (2) Visually center probe over unnotched reference standard hole, Position 1, Figure 4 and manipulate until minimum meter reading is obtained.

      (3) Balance instrument per manufacturer's instructions.

      (4) Adjust liftoff control per manufacturer's instructions to obtain same response when probe is on bare standard as when probe is lifted off part by 0.006 inch (approximate thickness of two sheets of paper).

      NOTE: Probe is visually centered over unnotched hole during liftoff calibration.

      (5) Place probe over unnotched hole and manipulate to obtain minimum meter response. Adjust meter position control to obtain a meter response of 20% of full scale.

BOEING PROPRIETARY - Copyright © Unpublished Work - See title page for details

(6) Center probe over notched reference standard hole, Position 2. See Figure 4. Response should be upscale.

(7) Adjust instrument sensitivity to obtain 80% of full scale or 60% meter response difference between notched and unnotched locations (Positions 1 and 2).

(8) Recheck null and liftoff. If readjustments are made, recheck sensitivity per Paragraph 4.A.(7).

(9) Cracks will be indicated by a higher meter response.

B. Calibration for inspection using inspection technique B.

(1) Connect spot probe (P/N SPO 1391) and set instrument frequency at 2.0 kHz.

(2) Place probe on reference standard at Position 1 per Figure 4.

(3) Balance instrument per manufacturer's instructions.

(4) Adjust liftoff control per manufacturer's instructions to obtain same response when probe is on bare standard as when probe is lifted off part by 0.006 inch (approximate thickness of two sheets of paper).

(5) Keep probe at Position 1 and use meter position control to adjust meter response to indicate 20% of full scale.

(6) Scan probe over notched portion of the reference standard, to Position 2. Meter response should be upscale.

(7) Adjust instrument sensitivity to obtain 80% of full scale or 60% meter response difference between notched and unnotched locations (Positions 1 and 2).

(8) Reposition probe at Position 1 and recheck balance and liftoff. If readjustments are made, recheck sensitivity per Paragraph 4.B.(6) and Paragraph 4.B.(7).

5. Inspection Procedure

A. Inspection of fastener holes for cracks using ring probe and inspection technique A. See Figure 5 for typical ring probe placement.

(1) Calibrate instrument per Paragraph 4.A.

(2) Refer to Figure 6 to identify areas to be inspected with technique A.

(3) Determine baseline response.

(a) Determine a baseline response on a minimum of two (2) fasteners.

(b) Select a representative baseline fastener and set its response to 20% of full meter scale.

(c) Do not change instrument sensitivity when establishing airplane baseline response.

(d) Check instrument settings on this fastener periodically to ensure that instrument response is the same as originally recorded (changes in meter response may occur as a result of instrument drift or probe temperature change).

(4) Inspect each fastener by visually centering probe on fastener and minimizing meter response.

B. Inspection of fastener holes for cracks using low frequency eddy current (LFEC) spot probe and inspection technique B. See Figure 5 for typical probe placement.

(1) Calibrate instrument per Paragraph 4.B.

(2) Refer to Figure 6 thru Figure 10 to identify areas to be inspected with technique B.

(3) Determine baseline response.

BOEING PROPRIETARY - Copyright © Unpublished Work - See title page for details

(a) Establish a baseline response for an acceptable crack free area by comparing a minimum of two locations on each frame and sill location.

(b) Select a representative location for this group and set its response to 20% full scale on meter.

(c) Do not change instrument sensitivity when establishing aircraft baseline response.

(d) Refer back to this location periodically to ensure that instrument response is the same as originally recorded. Changes in meter response may occur as a result of instrument drift or probe temperature change.

NOTE: Internal splice strap at upper aft corner of door will cause baseline shift. Re-establish baseline when probe is over strap. See Figure 8.

6. Inspection Results

A. Any location that shows a minimum meter deflection of 30% of full meter scale above established baseline response is a potential crack indication and further investigation is required.

NOTE: The following conditions may cause meter reading changes similar to crack indications.

(1) A decrease in fastener spacing - Compare with similarly spaced fasteners on the airplane or on the reference standard.

(2) Placing the probe too close to the edge of a skin or subsurface structure. Check drawings in the specific inspection procedure and compare with a similar location on the airplane.

(3) Difference in conductivity between skin panels - Compare only inspection locations common to the same skin panel(s).

(4) Placing or scanning probe too close to a magnetic steel fastener - Compare response obtained with probe near a similar fastener, or by scanning probe around the fastener at a constant distance away from it.

(5) Magnetic metal chips in paint - Remove paint and inspect.

B. When investigating crack-like indications, compare meter response obtained at same location on another airplane of same configuration.

C. A downscale (lower) meter reading is an indication of metal thickening which indicates probe is over a beam chord or stiffener flange.

BOEING PROPRIETARY - Copyright © Unpublished Work - See title page for details

INSPECTION TECHNIQUE	PROBE P/N	INSTRUMENT FREQUENCY
A 1	SPO 996	1.0 kHz
B 2	SPO 1391	2.0 kHz

NOTES

1 SEE FLAGNOTE 1, FIGURE 4 AND FIGURE 5 FOR CALIBRATION POSITIONS AND RING PROBE TYPICAL PLACEMENT

2 SEE FLAGNOTE 2, FIGURE 4 AND FIGURE 5 FOR CALIBRATION POSITIONS AND SPOT PROBE TYPICAL PLACEMENT

2159295 S0000471875_V2

Calibration Table
Figure 1

BOEING PROPRIETARY - Copyright © Unpublished Work - See title page for details

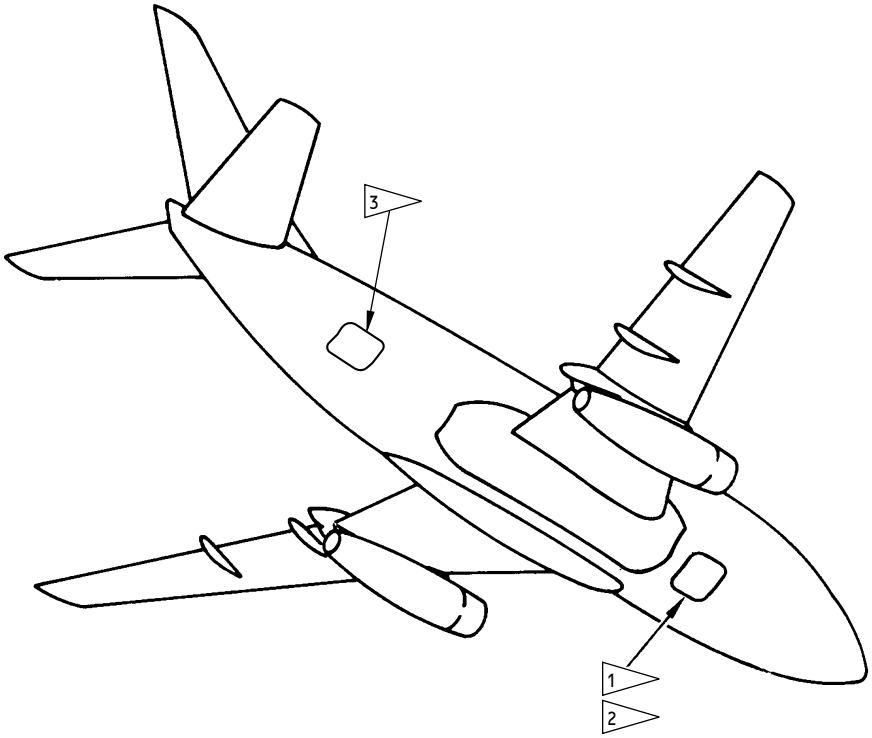

NOTES:

1. FOR SSI F-10, EXAMINE (SEE FIGURES 5 THRU 8):
   A. THE BEAR STRAP
   B. THE UPPER SILL INNER AND OUTER CHORD
   C. THE FRAME INNER CHORD AT THE FORWARD CARGO DOOR CUTOUT
2. FOR SB 737-53A1228, EXAMINE THE FORWARD CARGO DOOR BEAR STRAP AT THE LOWER DOOR CORNERS AS SHOWN IN FIGURE 10. ALSO EXAMINE THE BEAR STRAP AT THE LOCATIONS WHERE FASTENERS ARE IN THE FORWARD AND AFT FRAMES AS SHOWN IN FIGURE 6.
3. FOR SB 737-53A1228, EXAMINE THE AFT CARGO DOOR BEAR STRAP AT THE LOWER DOOR CORNERS AS SHOWN IN FIGURES 9 AND 10.

SSI F-10 AND SB 737-53A1228

2159296 S0000471876_V1

Forward and Aft Cargo Door Cutouts
Figure 2

BOEING PROPRIETARY - Copyright © Unpublished Work - See title page for details

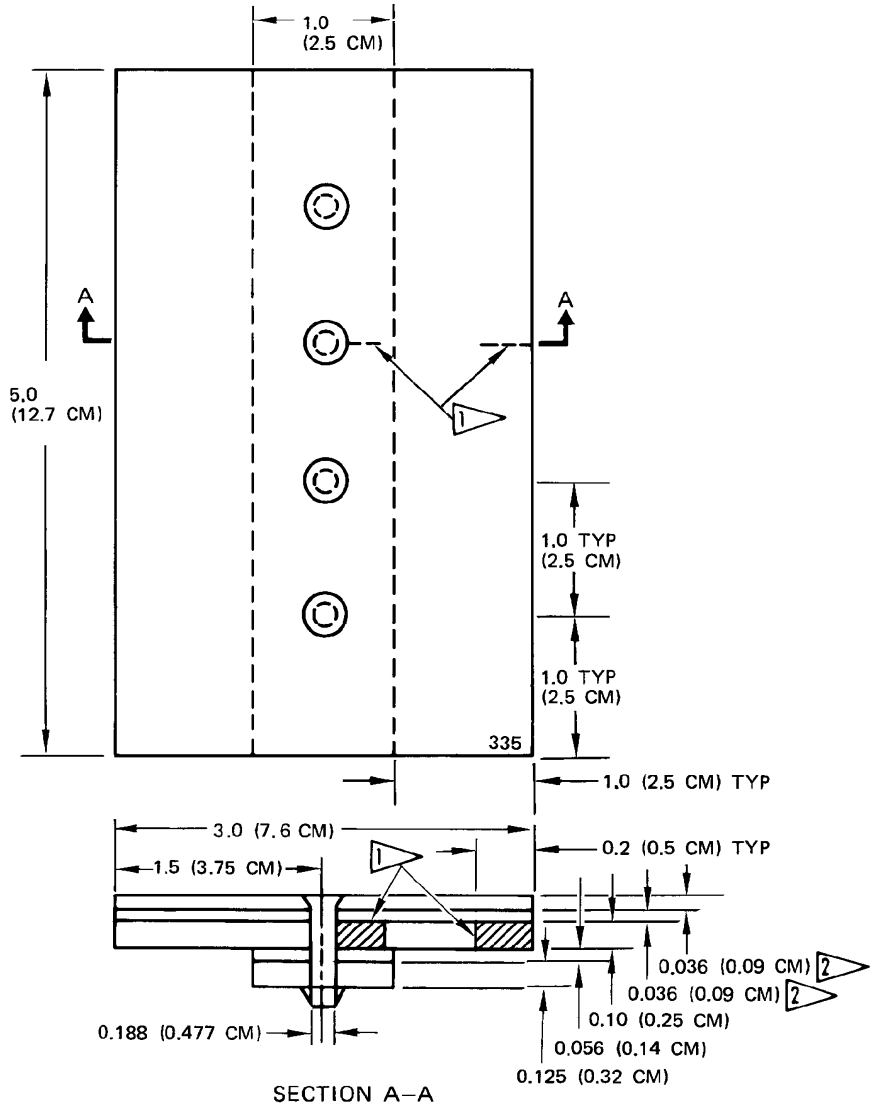

NOTES

- ALL DIMENSIONS ARE IN INCHES (CENTIMETERS IN PARENTHESES)
- TOLERANCE: X.X ± 0.05 (0.13 CM), X.XX ± 0.02 (0.05 CM), X.XXX ± 0.005 (0.013 CM)
- MATERIAL: 2024–T3 OR –T4 ALUMINUM
- FASTENERS: BACB30GY6A6 BOLTS, BACC30K6 COLLARS
- ETCH OR STEEL STAMP WITH 335
- P/N 6412–249 AVAILABLE FROM IDEAL SPECIALTY CO.

1 JEWELER'S SAWCUT 0.030 (0.08 CM) MAX WIDTH, 0.2 (0.5 CM) IN LENGTH

2 A SINGLE 0.072 (0.180 CM) MEMBER MAY BE SUBSTITUTED FOR THE 0.036 (0.091 CM) MEMBERS

2159298 S0000471877_V1

Reference Standard 335
Figure 3

BOEING PROPRIETARY - Copyright © Unpublished Work - See title page for details

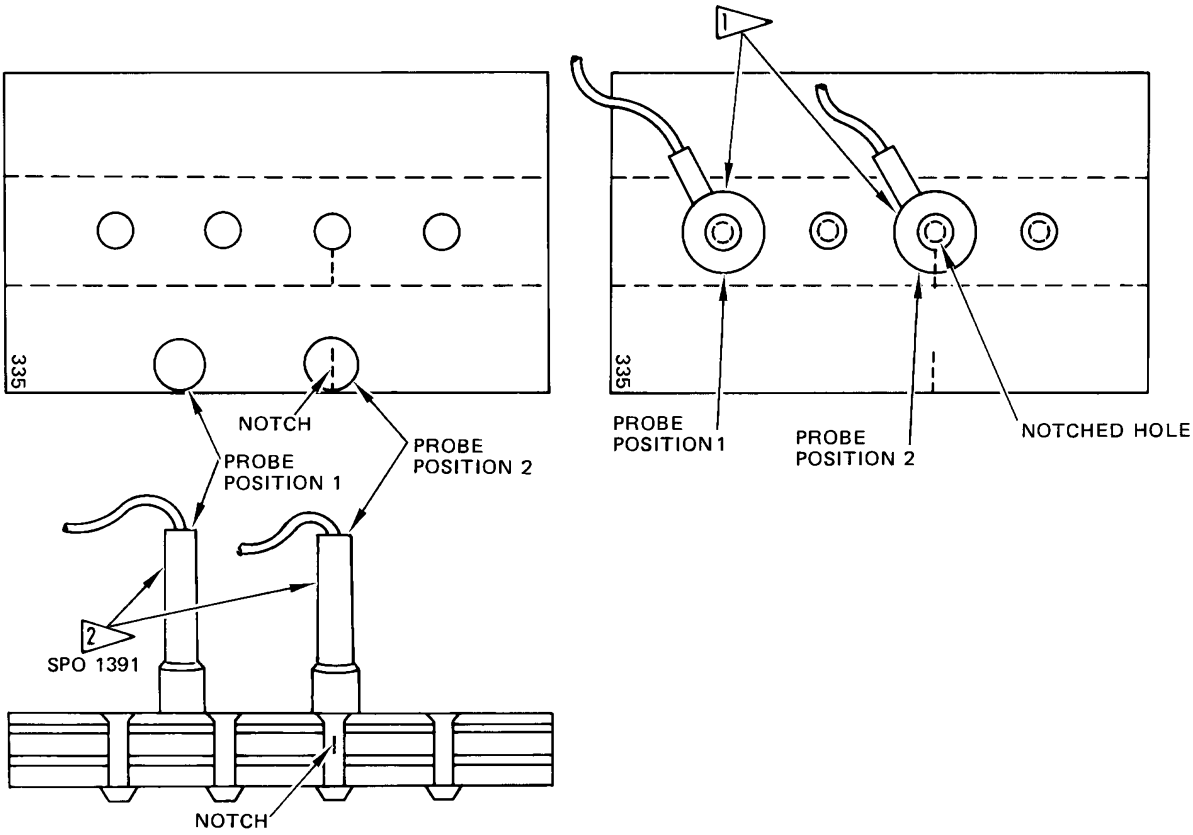

NOTES

1. CALIBRATION POSITION FOR TECHNIQUE A USING RING PROBE, SPO 996

2. CALIBRATION POSITION FOR TECHNIQUE B USING SPOT PROBE, SPO 1391

2159302 S0000471878_V1

Probe Calibration Positions on Reference Standard 335
Figure 4

BOEING PROPRIETARY - Copyright © Unpublished Work - See title page for details

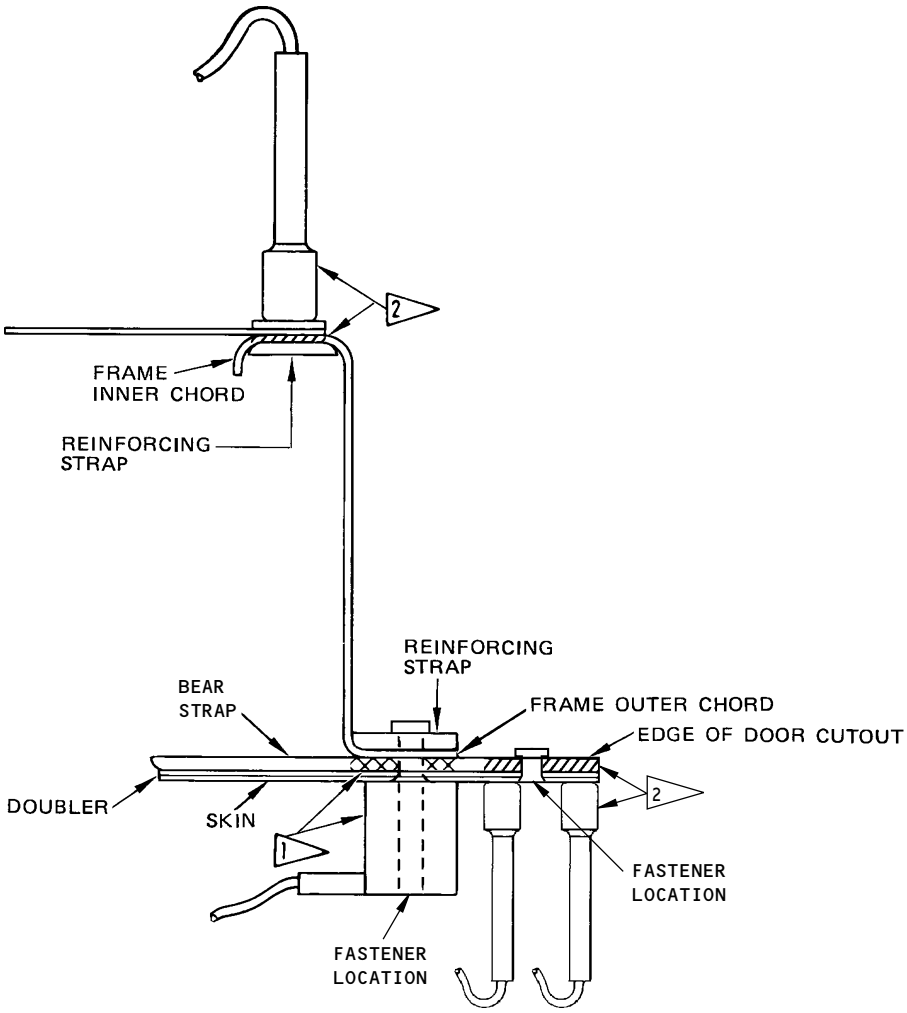

NOTES:

1. TYPICAL PROBE PLACEMENT FOR INSPECTION TECHNIQUE A, USING RING PROBE P/N SPO 996 PER ⁘ .
2. TYPICAL PROBE PLACEMENT FOR INSPECTION TECHNIQUE B, USING SPOT PROBE P/N SPO 1391 PER ⁄⁄⁄⁄ . DO A PROBE SCAN ALONG THE EDGE OF THE DOOR CUTOUT AND FRAME INNER CHORD FOR SSI F-10. FOR SB 737-53A1228, DO A PROBE SCAN ALONG THE EDGE OF THE DOOR CUTOUT AND AROUND AND BETWEEN THE FASTENERS IN THE ⁄⁄⁄⁄ AREA.

2159303 S0000471879_V1

Typical Probe Placement
Figure 5

BOEING PROPRIETARY - Copyright © Unpublished Work - See title page for details

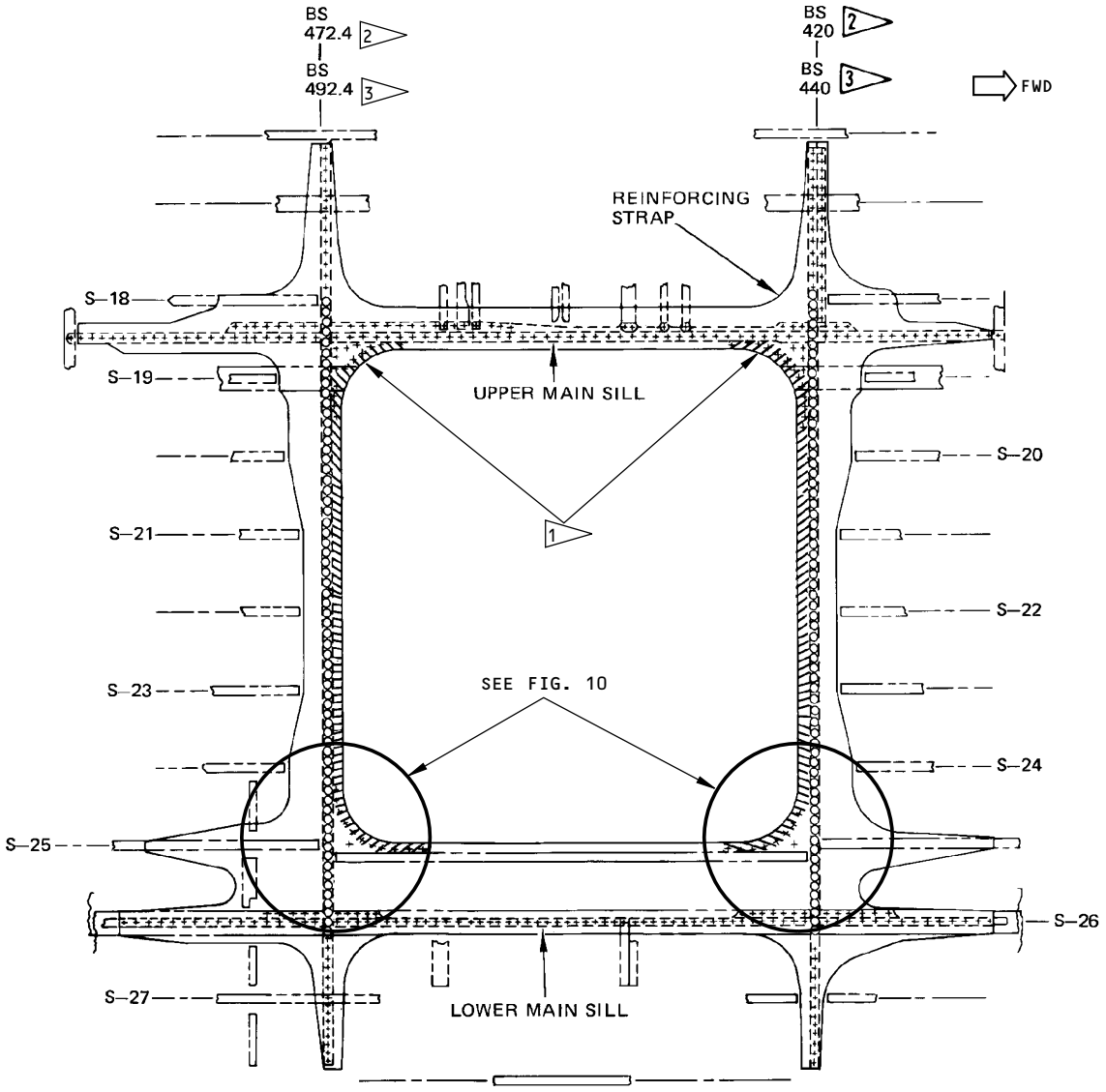

NOTES:

○ FASTENERS TO BE INSPECTED USING INSPECTION TECHNIQUE A FOR SSI F-10 AND SB 737-53A1228

1 PLACE SPOT PROBE PER ▨ AND SCAN PER TECHNIQUE B. SEE FIG. 5 FOR TYPICAL PROBE PLACEMENT FOR SSI F-10 INSPECTION. SEE FIG. 10 FOR THE SB 737-53A1228 SPOT PROBE SCAN AREA.

2 CUM LINE NO. 1 THROUGH 24

3 CUM LINE NO. 25 AND ON

2159304 S0000471880_V1

SSI F-10 and SB 737-53A1228 Forward Cargo Door Cutout
Figure 6

BOEING PROPRIETARY - Copyright © Unpublished Work - See title page for details

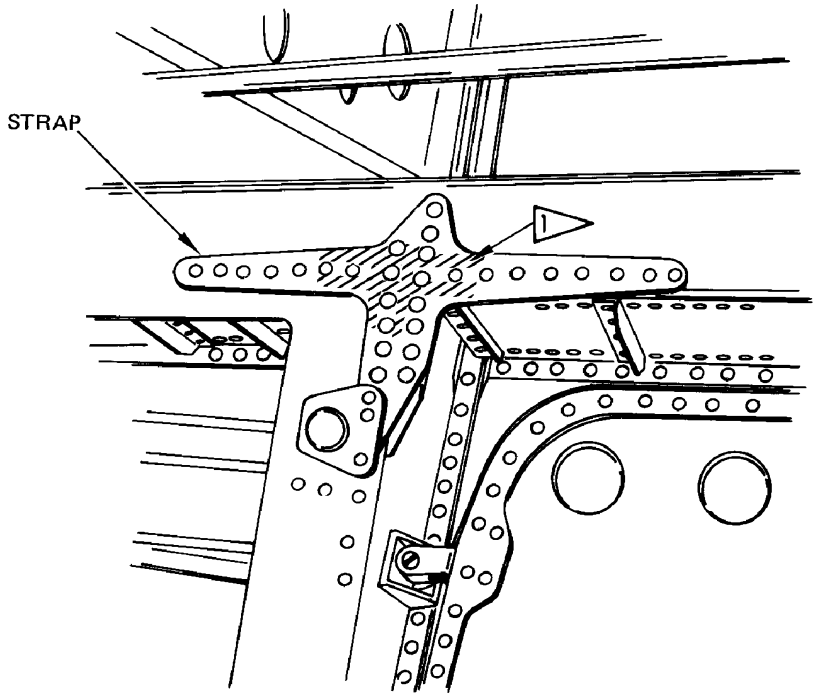

NOTES:

- FORWARD CARGO DOOR, UPPER FORWARD INTERIOR CORNER, RIGHT SIDE OF AIRPLANE

1 PLACE SPOT PROBE BETWEEN FASTENERS AND SCAN USING TECHNIQUE B PER ////. SEE FIGURE 5 FOR TYPICAL PROBE PLACEMENT

SSI F-10

2159305 S0000471882_V2

Forward Cargo Door Cutout - Upper Forward Inner Frame and Sill Chords
Figure 7

BOEING PROPRIETARY - Copyright © Unpublished Work - See title page for details

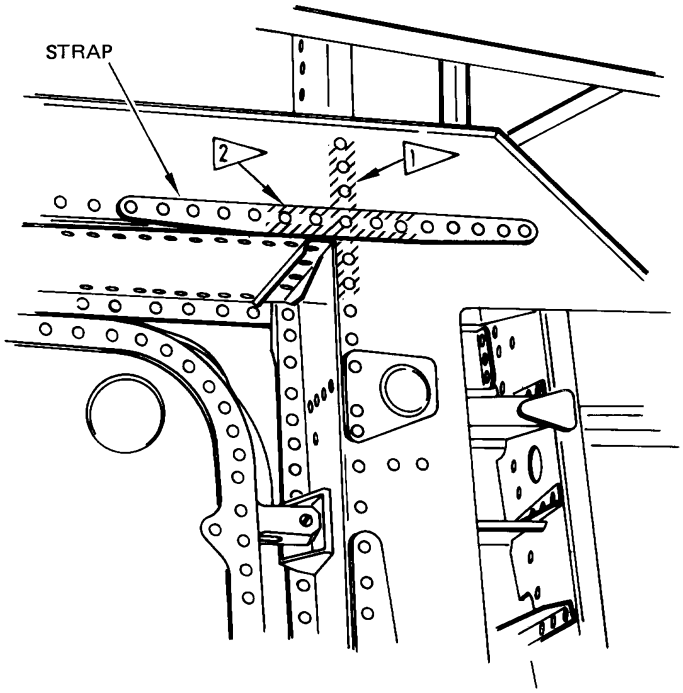

NOTES:

- FORWARD CARGO DOOR, UPPER AFT INTERIOR CORNER

1 PLACE SPOT PROBE BETWEEN FASTENERS AND SCAN USING TECHNIQUE B PER//////. SEE FIGURE 5 FOR TYPICAL PROBE PLACEMENT

2 THE STRAP OVER INNER SILL CHORD WILL CAUSE A BASELINE SHIFT, RE–ESTABLISH BASELINE WHEN PROBE IS OVER STRAP

NOTE: TO AVOID BASELINE SHIFT WHEN SCANNING HORIZONTALLY, EDGE MARGIN OF PROBE ON STRAP MUST BE CONSTANT

SSI F-10

2159306 S0000471883_V2

Forward Cargo Door Cutout - Upper Aft Inner Frame and Sill Chords
Figure 8

BOEING PROPRIETARY - Copyright © Unpublished Work - See title page for details

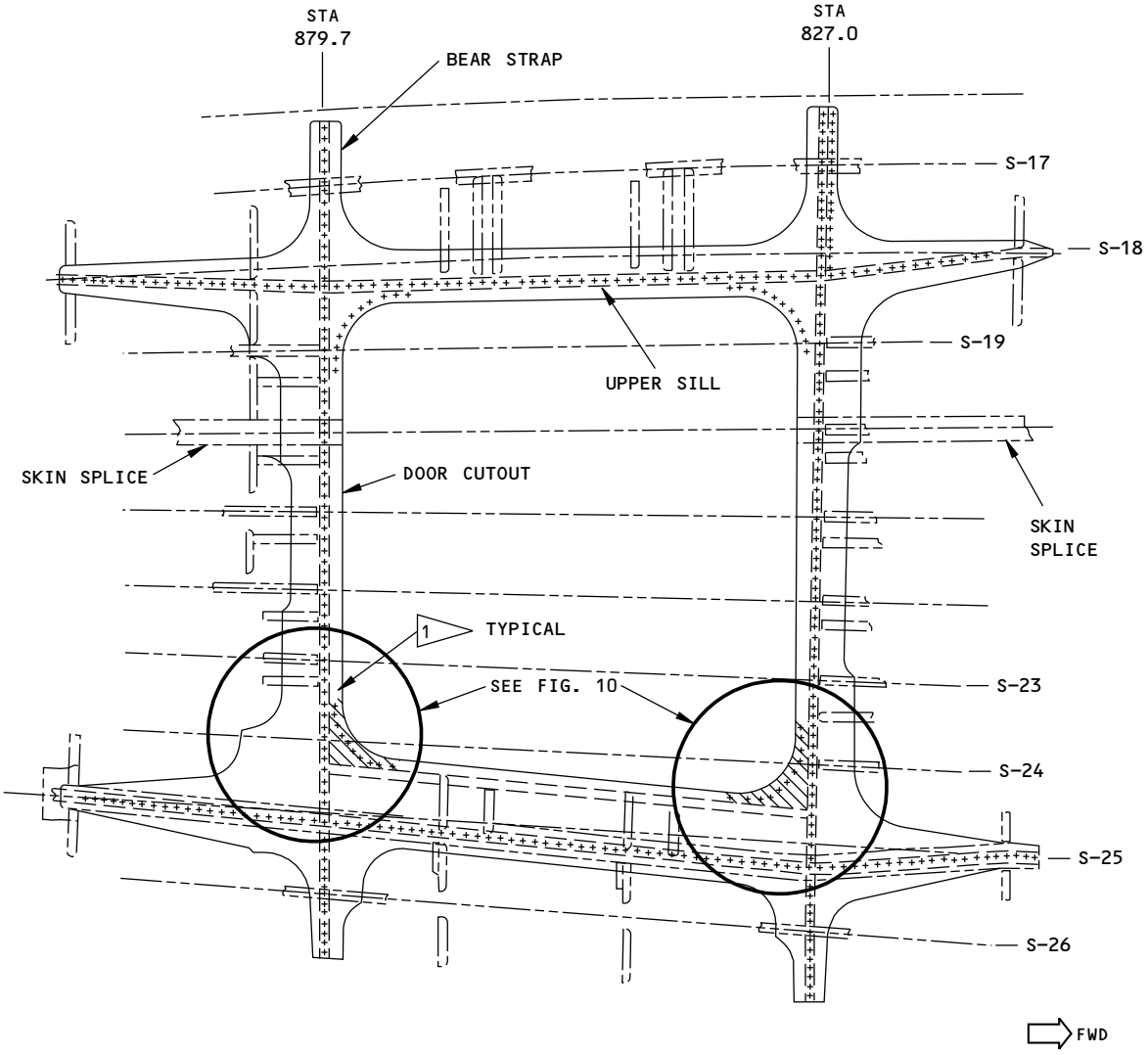

NOTES:

- THE AFT CARGO DOOR CUTOUT IS APPLICABLE TO 737-100 AIRPLANES; 737-200 IS ALMOST THE SAME.

1 PUT THE PROBE ON THE SKIN AND DO A SCAN BETWEEN AND AROUND ALL OF THE FASTENERS AT THE EDGE OF THE DOOR CORNERS. THE INSPECTION AREAS ARE IDENTIFIED WITH THE ▨ MARKS. SEE FIGURE 10

SB 737-53A1228

2159309 S0000471884_V2

Aft Cargo Door Cutout Bear Strap
Figure 9

BOEING PROPRIETARY - Copyright © Unpublished Work - See title page for details

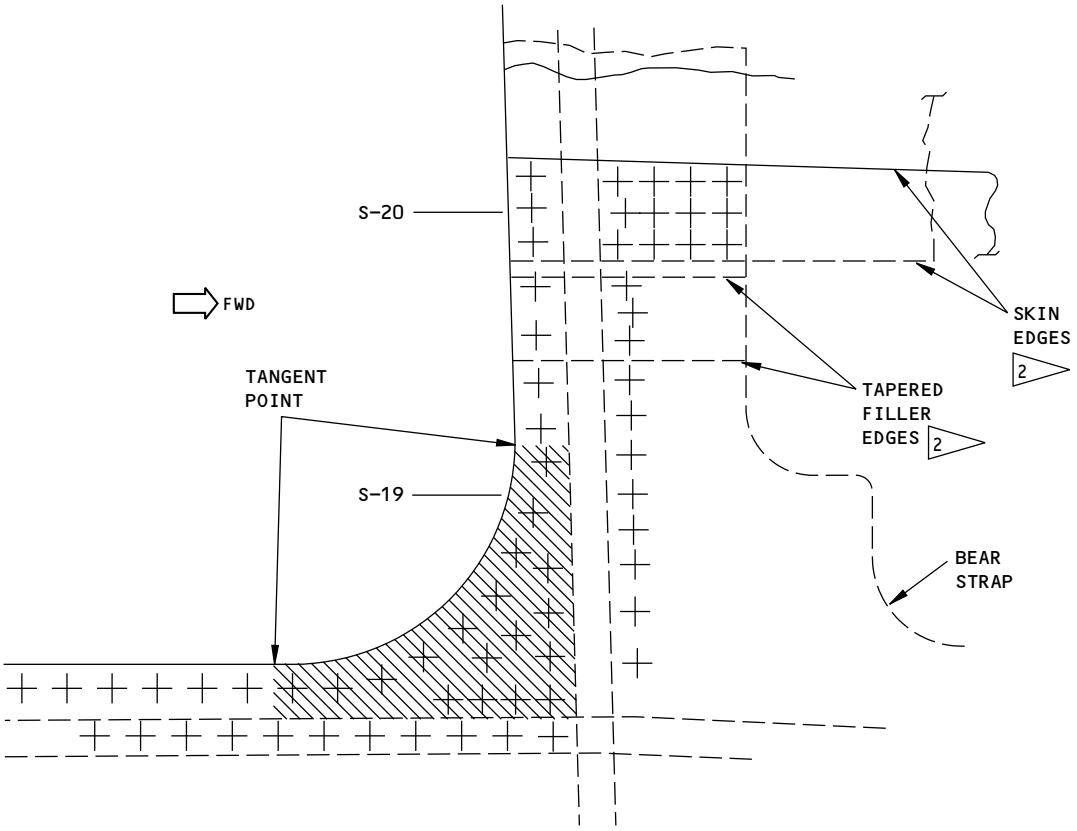

LOWER CORNER OF THE DOOR INSPECTION AREA

NOTES:

- FORWARD AND AFT CARGO DOOR CUTOUT APPLICABLE TO 737-100 AIRPLANES; 737-200 IS ALMOST THE SAME.
- THE LOWER RIGHT CORNER IS SHOWN; THE LOWER LEFT CORNER IS ALMOST THE SAME.
- DO A SCAN BETWEEN AND AROUND ALL OF THE FASTENERS AT THE EDGE OF THE DOOR CORNERS. THE INSPECTION AREAS ARE IDENTIFIED WITH THE \\\\\\ MARKS.

1 PUT THE PROBE ON THE SKIN AND USE TECHNIQUE B TO DO A SCAN OF THE AREAS IDENTIFIED BY THE \\\\\\ MARKS.

2 THE EDGES OF THE SKIN OR FILLER WILL CAUSE A CRACK TYPE INDICATION.

SB 737-53A1228

2159313 S0000471885_V1

Forward and Aft Cargo Door Cutout Bear Strap
Figure 10

BOEING PROPRIETARY - Copyright © Unpublished Work - See title page for details

PART 6 - EDDY CURRENT

FORWARD CARGO DOOR FRAMES (HFEC)

1. **Purpose**

   A. To detect cracks in the forward, lower cargo door frames, where frame webs are covered by door stop fittings, using high frequency eddy current.

   B. 737 Supplemental Structural Inspection Document (D6-37089) Reference:

      (1) Item: F-10

2. **Equipment**

   A. Any eddy current instrument and probe combination that satisfies the performance requirements of this procedure is suitable for this inspection. The following equipment was used in the development of this procedure.

      (1) Instrument - ED520; Magnaflux Corp. - Refer to Part 6, 51-00-00, Procedure 4.

      (2) Probe - Shielded, right angle pencil probe per Part 6, 51-00-00, Procedure 4 with the following dimensions: A = 0.10 inch (0.25 cm), B = 0.20 inch (0.50 cm), and C = 5.0 inches (12.7 cm), diameter = 0.125 inch (0.318 cm).

         (a) P/N MP 901-50B; NDT Product Engineering

      (3) Reference Standard - Refer to Part 6, 51-00-00, Procedure 4.

      NOTE: Refer to Part 1, 51-01-00, for information on equipment manufacturers.

3. **Prepare for the Inspection**

   A. Remove interior cargo bay liners/wall panels and insulation blankets to gain access to inspection areas.

   B. Clean surfaces at inspection areas (see Figure 1).

4. **Instrument Calibration**

   A. Refer to Part 6, 51-00-00, Procedure 4.

5. **Inspection Procedure**

   A. Inspect frames at outboard edge of door stop fittings. See Figure 1.

   B. Perform inspection scans per Part 6, 51-00-00, Procedure 4.

6. **Inspection Results**

   A. A rapid meter movement occurring as probe is moved over a short distance is a potential crack indication and further investigation is required.

   B. Refer to Part 6, 51-00-00, Procedure 4.

BOEING PROPRIETARY - Copyright © Unpublished Work - See title page for details

2159314 S0000471887_V1

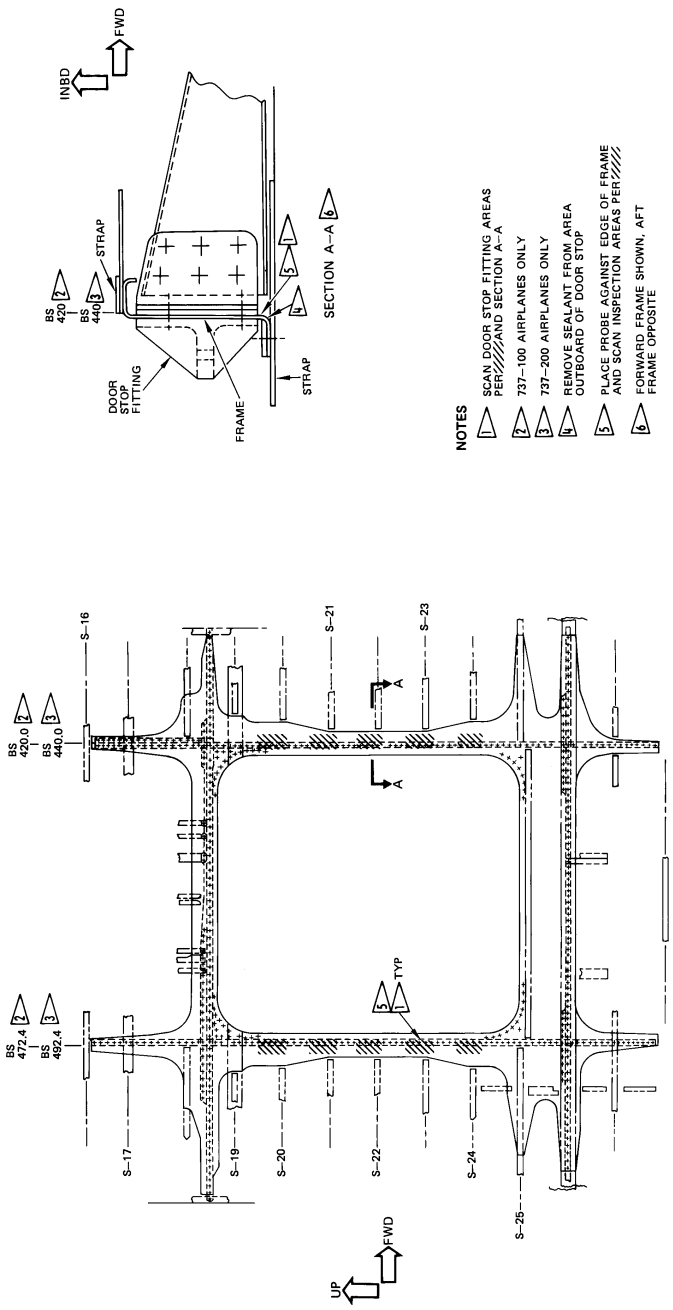

Forward Cargo Door Frames
Figure 1

BOEING PROPRIETARY - Copyright © Unpublished Work - See title page for details

PART 6 - EDDY CURRENT

FORWARD CARGO DOOR CUTOUT - BS 400 (-500), 440 (-300/-400) AND BS 452.4 (-500), 492.4 (-300/-400) FRAMES

1. Purpose

A. Use this procedure to do a surface inspection to find cracks in the forward and aft frames of the forward cargo door cutout. See Figure 1. The locations of the frames are as follows:

(1) The forward frame at BS 400 for the -500 airplanes and BS 440 for the -300/-400 airplanes.

(2) The aft frame at BS 452.4 for the -500 airplanes and BS 492.4 for the -300/-400 airplanes.

B. This procedure examines the frames at the inspection areas that follow:

(1) The frame inner chord at the frame-to-sill intersection of the upper and lower sills. See Views B thru E in Figure 1.

(2) The frame inner and outer chords at the ten door stop locations. See View F in Figure 1.

C. 737 Supplemental Structural Inspection Document (D6-37089) Reference:

(1) Item: F-10B

2. Equipment

A. General

(1) Use inspection equipment that can be calibrated on the reference standard as specified in Paragraph 4.

(2) Refer to Part 1, 51-01-00, for data about the equipment manufacturers.

B. Instrument

(1) Use an eddy current instrument that:

(a) Has an impedance plane display.

(b) Operates at a frequency range between 50 and 500 kHz.

(2) The instruments that follow were used to help prepare this procedure.

(a) Phasec 2d; GE Inspection Technologies

(b) Nortec 500; Olympus NDT

C. Probes

(1) To examine the frame inner chords at the frame-to-sill intersections of the upper sill, use a shielded, right-angle, 0.030 inch (0.76 mm) drop pencil probe with a length from 8 to 10 inches (203 to 254 mm) and a maximum diameter of 0.13 inches (3.2 mm). A flexible shaft is recommended. Refer to Part 6, 51-00-00, Procedure 23, paragraph 3, for data about probe selection.

(a) The probes that follow were used to help prepare this procedure.

1) TPENFLX903.-8; Techna NDT

2) MP9003-80FX; Olympus NDT

(2) To examine the frame inner chords at the frame-to-sill intersections of the lower sill, use a shielded, straight, 0.060 inch (1.14 mm) thick blade probe with a length from 6 to 8 inches (152 to 203 mm). A flexible shaft is recommended. Refer to Part 6, 51-00-00, Procedure 23, paragraph 3, for data about probe selection.

BOEING PROPRIETARY - Copyright © Unpublished Work - See title page for details

(a) The probe that follows was used to help prepare this procedure.

1) TBL060-8; Techna NDT

(3) To examine the frame inner and outer chords at the door stop fitting locations, use a shielded, right-angle or straight pencil probe with a maximum diameter of 0.060 inches (3.2 mm). A flexible shaft is recommended. Refer to Part 6, 51-00-00, Procedure 23, paragraph 3 for data about probe selection.

(a) The probes that follow were used to help prepare this procedure.

1) XPEN45-5; Techna NDT

2) MMT901-50FX; Olympus NDT

D. Reference Standard

(1) Use reference standard 126 (or an equivalent) as given in Part 6, 51-00-00, Procedure 23, paragraph 3.

3. Prepare for the Inspection

A. Identify the inspection areas shown in Figure 1.

B. Remove the interior cargo bay liners, insulation blankets, floor panels above the upper sill and scuff plates to get access to the inspection areas.

C. Clean the inspection areas. Remove sealant if necessary. Remove paint only if it is loose.

4. Instrument Calibration

A. Calibrate the equipment as specified in Part 6, 51-00-00, Procedure 23. Use reference standard 126 (or an equivalent).

5. Inspection Procedure

A. Examine the frame inner chords at the frame-to-sill intersections of the upper and lower sills as follows:

(1) Calibrate the instrument as specified in Paragraph 4.

(a) Use the probe identified in Paragraph 2.C.(1) to examine the upper sill inspection areas.

(b) Use the probe identified in Paragraph 2.C.(2) to examine the lower sill inspection areas.

(2) Make a scan on the inner chord at the inspection areas identified in Views B thru E in Figure 1 as specified in Part 6, 51-00-00, Procedure 23, paragraph 6.

NOTE: It can be necessary to go from inside the fuselage, through the lighting holes in the S-17 crease beam to get better access to the inspection areas in the upper sill.

B. Examine the frame inner and outer chords at the ten door stop fitting locations as follows:

(1) Calibrate the instrument as specified in Paragraph 4.A. Use the probe identified in Paragraph 2.C.(3).

(2) Make a scan on the frame inner and outer chord at the inspection areas identified in Views A and F in Figure 1 as specified in Part 6, 51-00-00, Procedure 23, paragraph 6. If there is no access to the inspection area at the frame outer chord and the inspection cannot be done on the opposite side of the frame, as shown in flagnote 4, remove the door stop fitting.

6. Inspection Results

A. Refer to Part 6, 51-00-00, Procedure 23, paragraph 7, for instructions to help make an analysis of the inspection results.

BOEING PROPRIETARY - Copyright © Unpublished Work - See title page for details

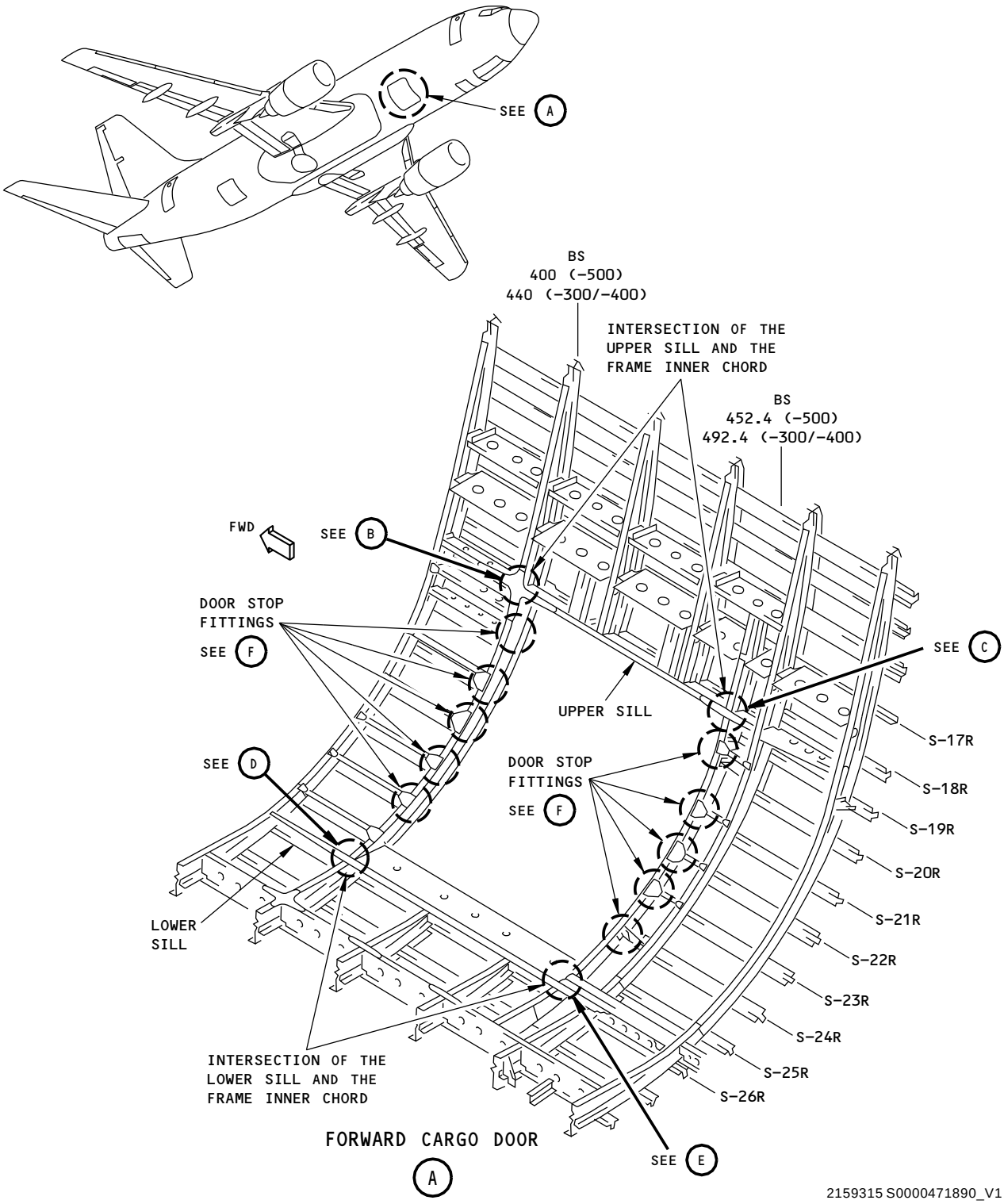

Forward Cargo Door Cutout Inspection Areas
Figure 1 (Sheet 1 of 4)

BOEING PROPRIETARY - Copyright © Unpublished Work - See title page for details

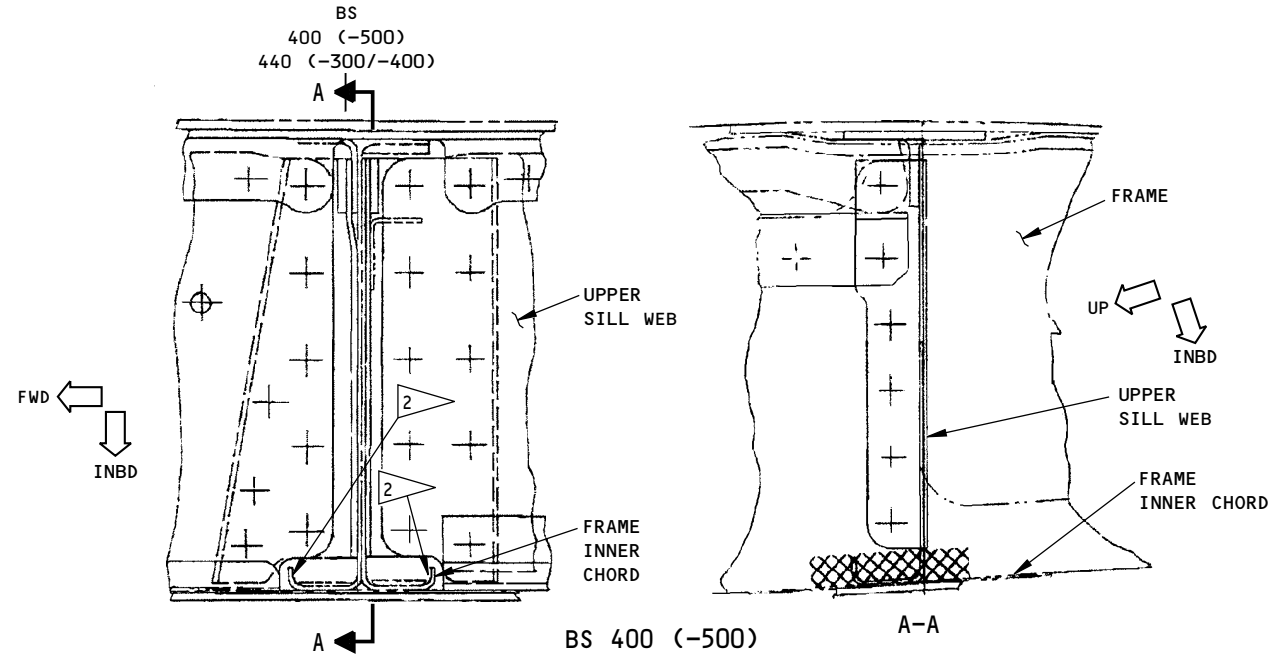

BS 400 (-500)
BS 440 (-300/-400)
FRAME TO UPPER SILL INSPECTION AREA

B

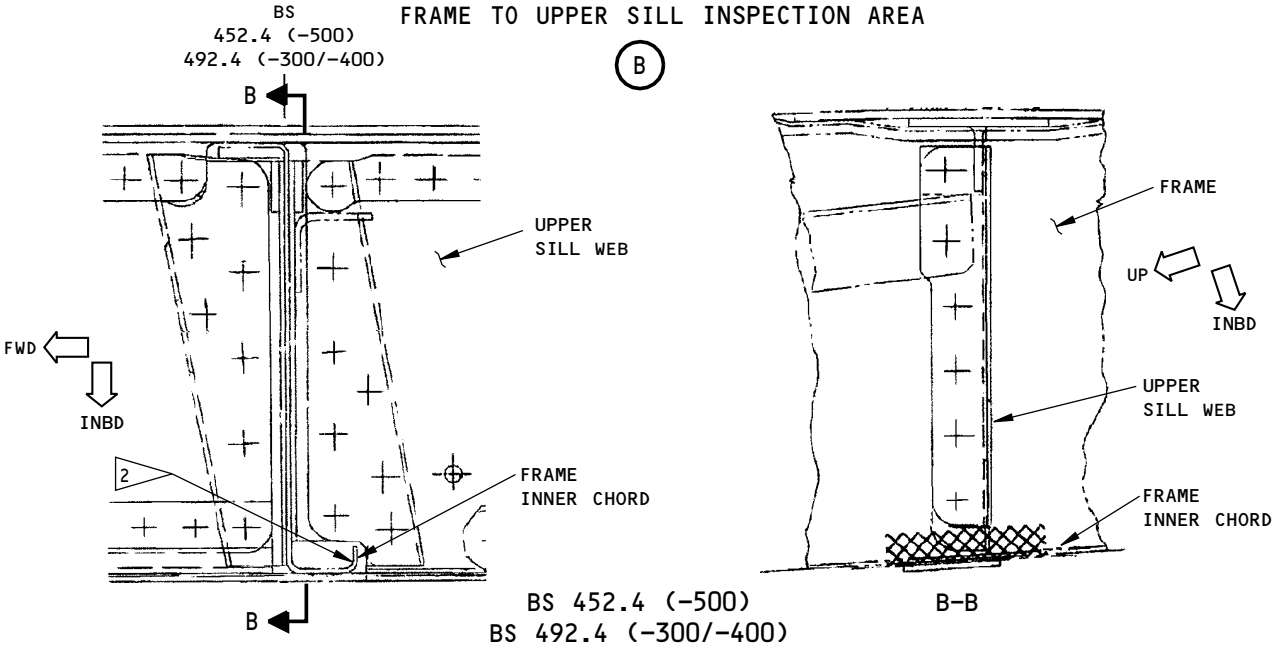

BS 452.4 (-500)
BS 492.4 (-300/-400)
FRAME TO UPPER SILL INSPECTION AREA

C

NOTES:

INSPECTION AREA

1 INSPECTION AREA ON THE OUTER RADIUS OF THE INNER FRAME.

2 INSPECTION AREA ON THE INNER SURFACE OF THE INNER FRAME.

2159316 S0000471891_V1

Forward Cargo Door Cutout Inspection Areas
Figure 1 (Sheet 2 of 4)

BOEING PROPRIETARY - Copyright © Unpublished Work - See title page for details

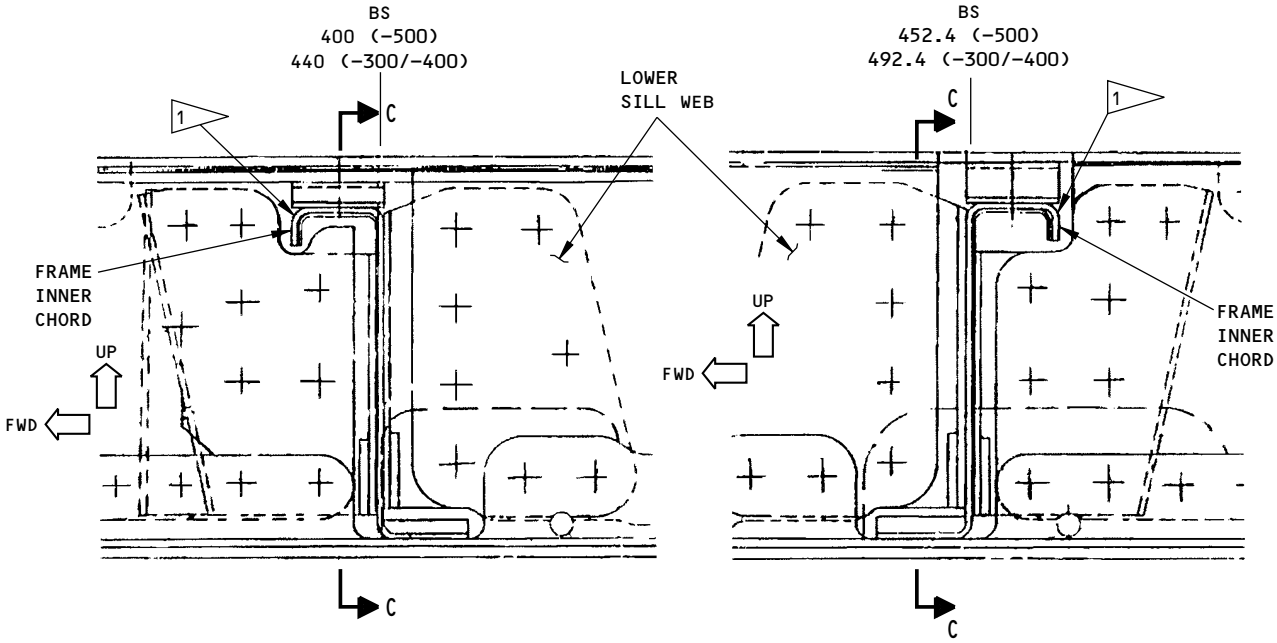

BS 400 (-500)
BS 440 (-300/-400)
FRAME TO LOWER SILL INSPECTION AREA

D

BS 452.4 (-500)
BS 492.4 (-300/-400)
FRAME TO LOWER SILL INSPECTION AREA

E

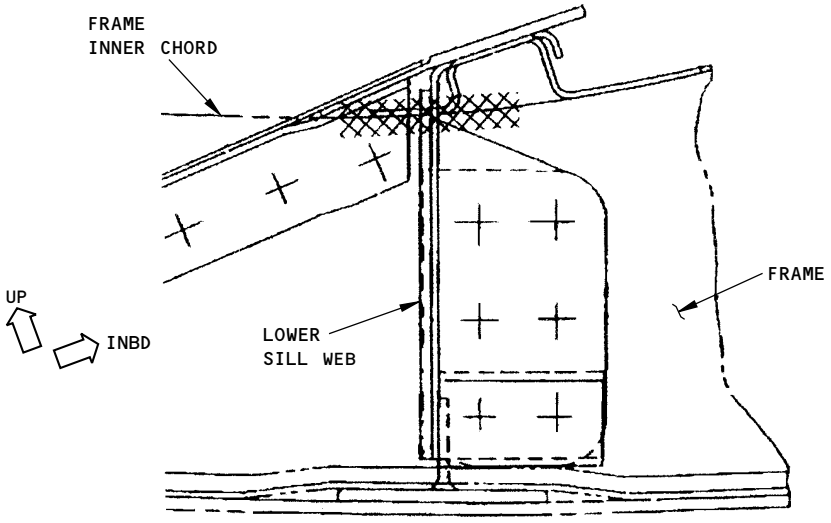

C-C

BS 452.4 (-500), BS 492.4 (-300/-400) FRAME SHOWN;
BS 400 (-500), BS 440 (-300/-400) FRAME OPPOSITE

2159317 S0000471892_V1

Forward Cargo Door Cutout Inspection Areas
Figure 1 (Sheet 3 of 4)

BOEING PROPRIETARY - Copyright © Unpublished Work - See title page for details

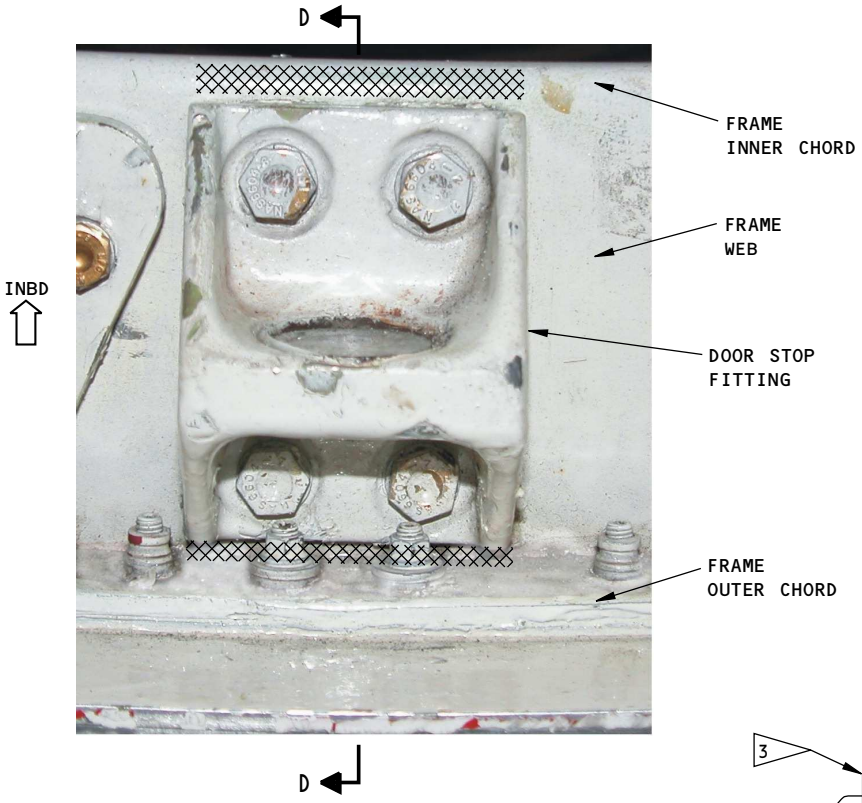

TYPICAL DOOR STOP FITTING
INSPECTION AREAS
(10 LOCATIONS)

F

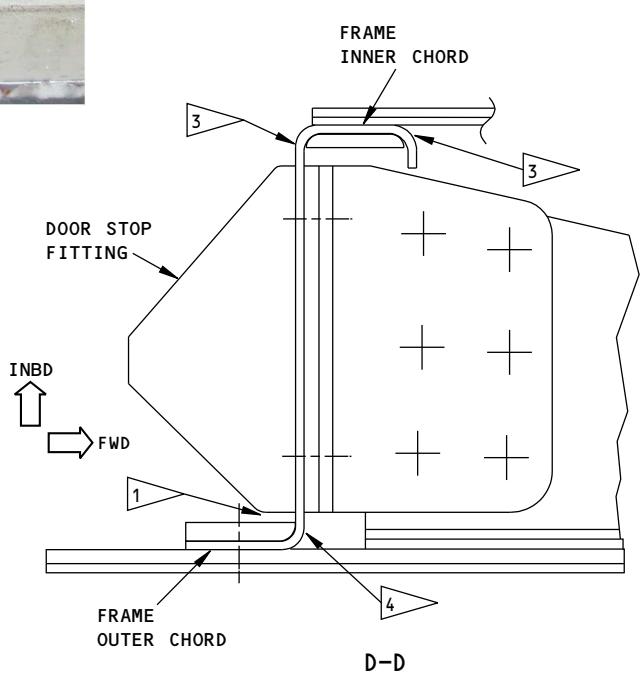

NOTES:

INSPECTION AREA

3 PROBE POSITION AT THE INSPECTION AREA.

4 PROBE POSITION WHEN ACCESS IS NOT POSSIBLE BELOW THE DOOR STOP FITTING.

BS 452.4 (-500), BS 492.4 (-300/-400) FRAME SHOWN;
BS 400 (-500), BS 440 (-300/-400) FRAME OPPOSITE

2159318 S0000471893_V1

Forward Cargo Door Cutout Inspection Areas
Figure 1 (Sheet 4 of 4)

BOEING PROPRIETARY - Copyright © Unpublished Work - See title page for details

PART 6 - EDDY CURRENT

NOSE LANDING GEAR WHEEL WELL WEB STIFFENER - BS 268.25

1. **Purpose**
   - A. Use this high frequency eddy current procedure to find cracks in the web stiffener that is in the wheel well of the nose landing gear. The inspection area of the web stiffener is from WL 160.0 to WL 180.0 at BS 268.25.
   - B. This procedure uses an instrument with an impedance plane display or a meter display.
   - C. 737 Supplemental Structural Inspection Document (D6-37089) Reference:
     - (1) Item: F-49
2. **Equipment**
   - A. General
     - (1) Use inspection equipment that can be calibrated on the reference standard as specified in Paragraph 4.
     - (2) Refer to Part 1, 51-01-00, for data about the equipment manufacturers.
   - B. Instrument, Probes and Reference Standard
     - (1) Refer to Part 6, 51-00-00, Procedure 4, if a meter display instrument is used and Part 6, 51-00-00, Procedure 23, if an impedance plane display instrument is used.
     - (2) Use a shielded, right angle, pencil probe as specified in Part 6, 51-00-00, Procedure 4 or Part 6, 51-00-00, Procedure 23, that has the dimensions that follow: A = 0.5 inch (12.7 mm), B = 0.625 inch (15.9 mm), C = 5.0 inches (127 mm).
3. **Prepare for the Inspection**
   - A. Remove the aft access panels on the left and right side walls of the wheel well, and sufficient insulation to get access to the inspection areas. (see Figure 1).
   - B. Clean the surfaces of the inspection area. See Figure 2.
4. **Instrument Calibration**
   - A. Refer to Part 6, 51-00-00, Procedure 4, if a meter display instrument is used or Part 6, 51-00-00, Procedure 23, if an impedance plane display instrument is used.
5. **Inspection Procedure**
   - A. Examine the web stiffener for cracks as specified in Figure 2.
     - (1) Do the inspection scans as specified in Part 6, 51-00-00, Procedure 4, or Part 6, 51-00-00, Procedure 23.
6. **Inspection Results**
   - A. Refer to the applicable inspection procedure for data to help make an analysis of the inspection results.

BOEING PROPRIETARY - Copyright © Unpublished Work - See title page for details

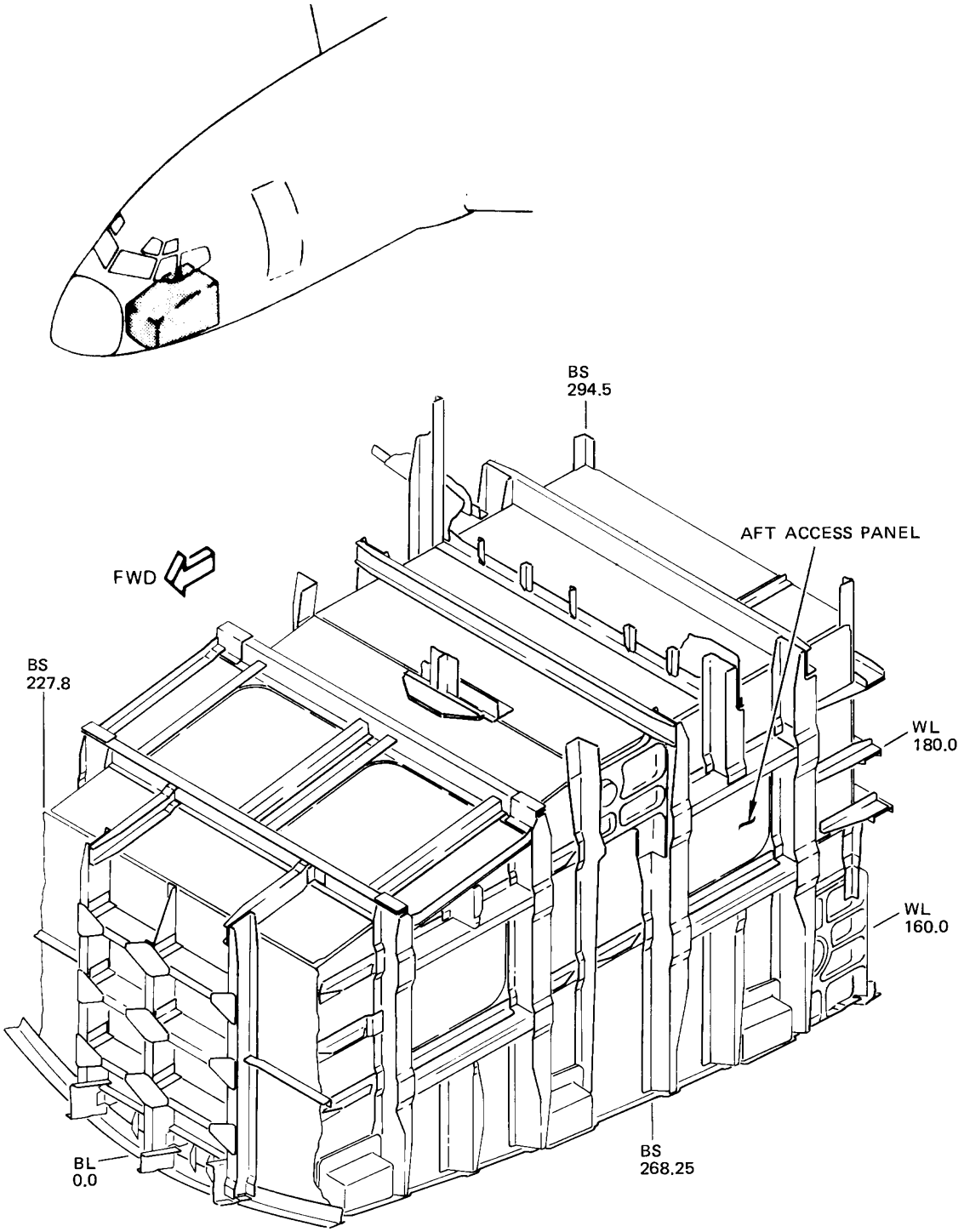

2159319 S0000471896_V1

Nose Wheel Well Structure Identification
Figure 1

BOEING PROPRIETARY - Copyright © Unpublished Work - See title page for details

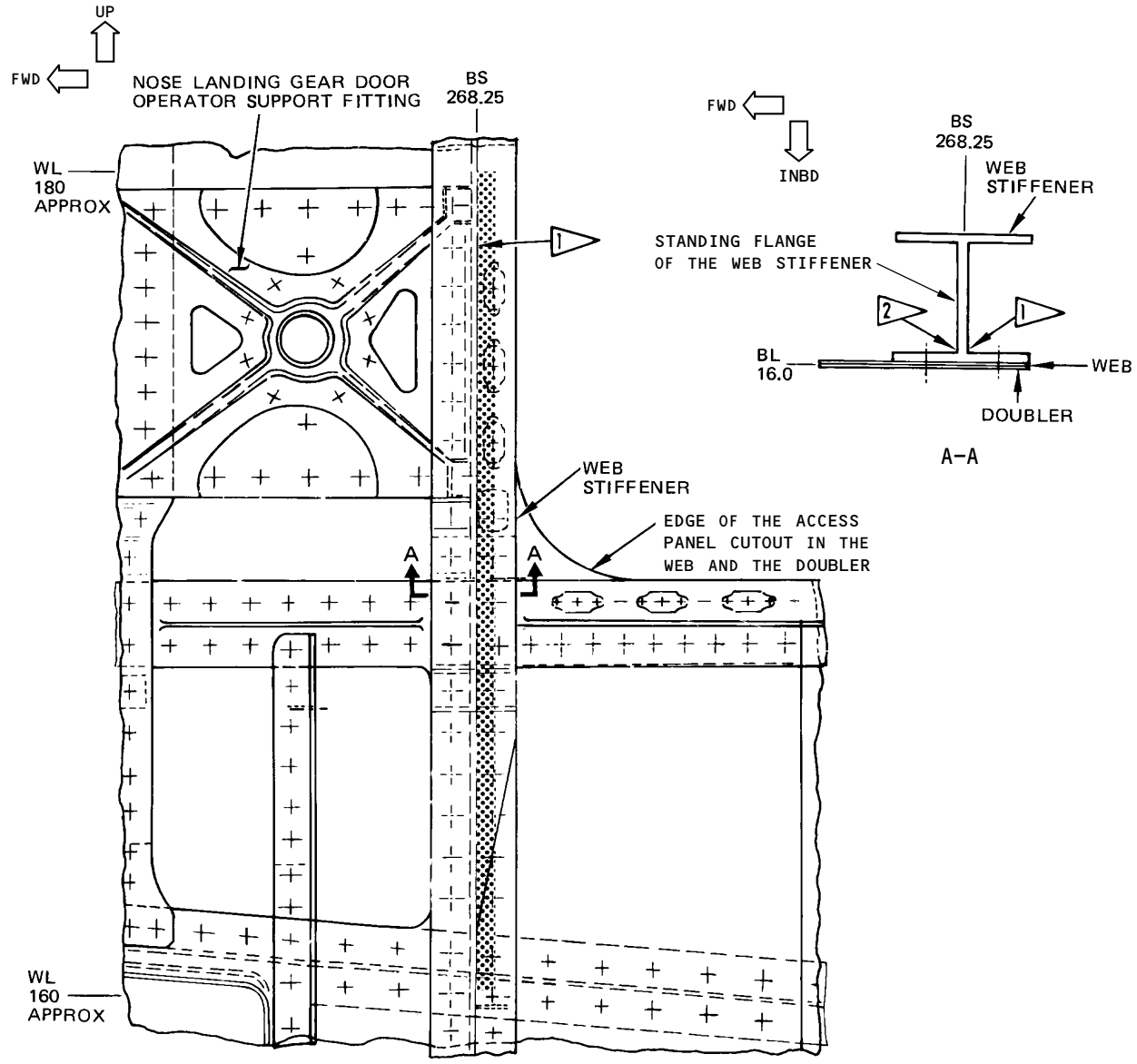

NOTES:

- VIEW AS YOU LOOK INBOARD
- THE LEFT SIDE IS SHOWN; THE RIGHT SIDE IS OPPOSITE

INSPECTION AREA

1 PUT THE PROBE ON THE AFT SIDE OF THE WEB STIFFENER IN THE RADIUS OF THE STANDING FLANGE AND DO A SCAN FROM WL 180 TO WL 160.

2 PUT THE PROBE ON THE FORWARD SIDE OF THE WEB STIFFENER, IN THE RADIUS OF THE STANDING FLANGE, TO EXAMINE AREAS OF THE WEB STIFFENER THAT YOU CANNOT GET ACCESS TO FROM THE FLAG NOTE 1 SIDE OF THE WEB STIFFENER.

2159321 S0000471897_V1

Nose Gear Wheel Well Stiffener - BS 268.25
Figure 2

BOEING PROPRIETARY - Copyright © Unpublished Work - See title page for details

PART 6 - EDDY CURRENT

FORWARD GALLEY DOOR CUTOUT (LFEC)

1. **Purpose**

   A. To detect cracks in the skin and strap of the forward galley door cutout using low frequency eddy current.

   B. 737 Supplemental Structural Inspection Document (D6-37089) Reference:

      (1) Item: F-15

2. **Equipment**

   NOTE: Refer to Part 1, 51-01-00, for information on equipment manufacturers.

   A. Instrument - Any eddy current instrument satisfying the performance requirements of this procedure is suitable for this inspection. The following instrument was used during development of this procedure:

      (1) MIZ-10 or MIZ-10A; Zetec Inc., eddy current instrument capable of operating between 200 Hz and 2.0 kHz.

   B. Probe - This procedure uses two probes. Any probes of similar size that will satisfy the requirements of this procedure are acceptable. The following probes were used to develop this procedure:

      (1) Spot probe with 0.40-inch (1.02 cm) OD case, usable at 1.5 kHz, P/N SPO 1391; Nortec Inc.

      (2) Ring (encircling) probe with 0.75-inch (1.91 cm) OD, 0.30-inch (0.76 cm) ID, usable at 200 Hz, P/N SPO 996; Nortec Inc.

   C. Reference Standard - Manufacture Reference Standard 338A and 338B per Figure 1.

      NOTE: Reference Standard 338B is required only for airplanes which have 301 stainless steel doublers in the areas circled on Figure 3.

3. **Prepare for the Inspection**

   A. Remove scuff plate.

   B. Wipe skin surface clean and remove loose paint.

4. **Instrument Calibration**

   NOTE: Calibration is required for each inspection code. An inspection code is used to identify fasteners which have similar inspection conditions.

   A. Calibrate for fastener hole crack inspection using the ring probe centered on the fastener.

      (1) Set instrument frequency to 200 Hz.

      (2) Visually center probe over the unnotched reference standard hole, Position 1, Figure 2.

      (3) Balance instrument per manufacturer's instructions.

      (4) Adjust liftoff control per manufacturer's instructions to obtain same response when probe is on bare standard as with probe lifted off part by 0.006 inch (approximately the thickness of two sheets of paper).

         NOTE: Probe is visually centered over unnotched hole during liftoff calibration. Obtain minimum meter reading.

BOEING PROPRIETARY - Copyright © Unpublished Work - See title page for details

(5) Recenter probe over unnotched hole and adjust meter response to read 20% of full scale with meter position control.

NOTE: Probe is centered by manipulating to obtain minimum meter response.

(6) Center probe over notched reference standard hole, Position 2, Figure 2. Response should be upscale.

(7) Adjust instrument sensitivity to obtain a 70% of full scale meter response, or 50% of full scale meter response difference between notched and unnotched holes.

(8) Recheck null and liftoff. If readjustments are made, recheck sensitivity per Paragraph 4.A.(6) and Paragraph 4.A.(7).

(9) Cracks will be indicated by higher meter response.

B. Calibrate for subsurface crack detection using low frequency eddy current spot probe.

(1) Set frequency at 1.5 kHz.

(2) Place probe over unnotched area of reference standard, Position 3, Figure 2.

(3) Balance instrument per manufacturer's instructions.

(4) Adjust liftoff control per manufacturer's instructions to obtain same response when probe is on bare standard as with probe lifted off part by 0.006 inch (approximately the thickness of two sheets of paper).

NOTE: Probe is located at Position 3 during liftoff calibration.

(5) With probe adjacent to unnotched hole (Position 3), adjust meter response to indicate 20% of full scale with meter position control.

(6) Position probe over notched area of reference standard, Position 4. Response should be upscale.

(7) Adjust instrument sensitivity to obtain a 70% of full scale meter response, or 50% of full scale meter response difference between notched and unnotched locations (Positions 3 and 4).

(8) Reposition probe at Position 3 and check null and liftoff. If readjustments are made, recheck sensitivity per Paragraph 4.B.(7).

(9) Cracks will be indicated by higher meter response.

5. Inspection Procedure

A. Inspect fastener holes for cracks using ring probe centered on fastener.

(1) Calibrate instrument per Paragraph 4.A.

(2) Use a minimum of two fasteners to establish airplane baseline response for an acceptable fastener.

(a) Select a representative fastener from this group and set its response to 20% of full meter scale.

NOTE: Do not change instrument sensitivity when establishing airplane baseline response.

(b) Refer back to this fastener periodically to ensure that instrument response is same as originally recorded.

NOTE: Changes in meter response may occur as a result of instrument drift or probe temperature change.

(3) Inspect each fastener by visually centering probe on fastener and manipulating to obtain minimum response.

BOEING PROPRIETARY - Copyright © Unpublished Work - See title page for details

B. Inspect fuselage cutout corners for cracks using low frequency eddy current spot probe.

(1) Calibrate instrument per Paragraph 4.B.

(2) Establish baseline response for acceptable crack-free area by comparing minimum of two locations at each corner of door cutout.

(a) Select representative location from this group and set its response to 20% of full meter scale.

NOTE: Do not change instrument sensitivity when establishing the aircraft baseline response.

(b) Refer back to this location periodically to ensure that instrument response is same as originally recorded.

NOTE: Changes in meter response may occur as a result of instrument drift or probe temperature change.

6. Inspection Results

A. Any location that shows minimum meter reading of 30% above established baseline response is a potential crack indication and further investigation is required.

NOTE: Following conditions may cause meter reading changes similar to crack indications.

(1) Decrease in fastener spacing. Compare with similarly spaced fasteners on airplane or on reference standard.

(2) Nearby edge of skin or subsurface structure. Check inspection figure and compare with similar location on airplane.

(3) Difference in conductivity between skin panels. Compare only inspection locations common to a skin panel.

(4) Placing or scanning probe too close to magnetic steel fastener. Compare response obtained with probe placed near similar fastener, or by scanning area around fastener at constant distance away from it.

(5) Magnetic chips in paint. Remove paint and reinspect.

(6) Difference in fastener material (magnetic versus nonmagnetic). Confirm using a permanent magnet. If fastener material is different, complete recalibration is required. Remove and replace reference standard fasteners with same type as found on airplane and recalibrate. Contact Boeing Commercial Airplane Company for further instructions.

B. When investigating crack-like indications, compare meter responses obtained at same location on opposite side of airplane or at same location on another airplane of same configuration.

C. A downscale (lower) meter reading is an indication of metal thickening which indicates probe is over a beam chord or stiffener flange.

BOEING PROPRIETARY - Copyright © Unpublished Work - See title page for details

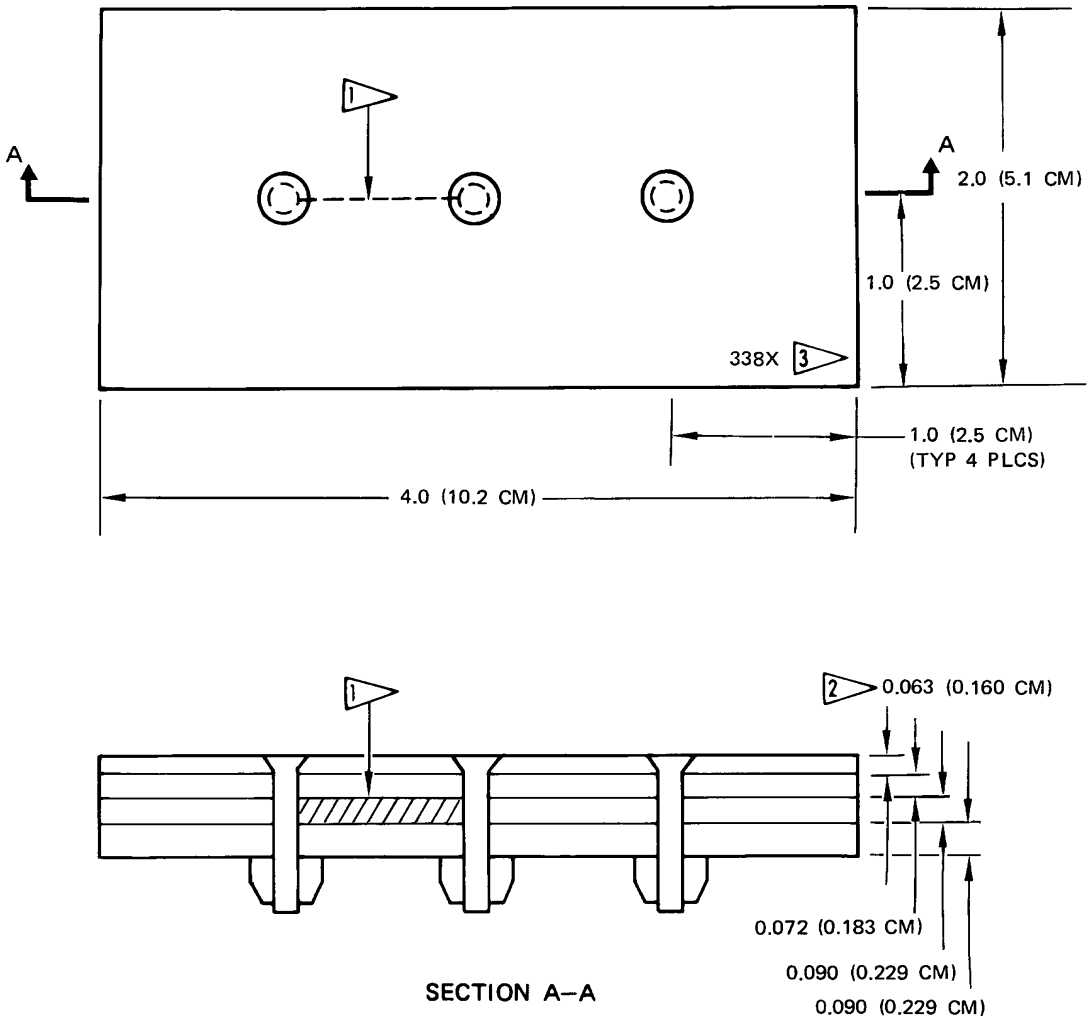

NOTES

- ALL DIMENSIONS IN INCHES (CENTIMETERS IN PARENTHESES)
- TOLERANCE: X.X ± 0.05 (0.13 CM), X.XX ± 0.02 (0.05 CM), X.XXX ± 0.005 (0.013 CM)
- MATERIAL: 2024-T3 OR T4 ALUMINUM EXCEPT AS NOTED
- FASTENERS: BACB30GY6A4 (338A) OR BACB30GY6A5 (338B) LOCKBOLTS, BACC30K6 COLLARS (3 PLACES)
- P/N 6412-244 AVAILABLE FROM IDEAL SPECIALTY CO.

1 JEWELER'S SAWCUT 0.030 (0.08 CM) MAX WIDTH

2 0.063 (0.160 CM) LAYER PRESENT ONLY FOR REFERENCE STANDARD 338B. MAKE FROM 301 CRES STAINLESS STEEL 1/2 HARD CONDITION AND STEEL STAMP WITH 338B FOR USE ON AIRCRAFT WITH EXTERIOR STEEL DOUBLERS PER FIGURE 3

3 ETCH OR STEEL STAMP WITH 338A OR 338B

2159323 S0000471899_V2

Reference Standards 338A and 338B
Figure 1

BOEING PROPRIETARY - Copyright © Unpublished Work - See title page for details

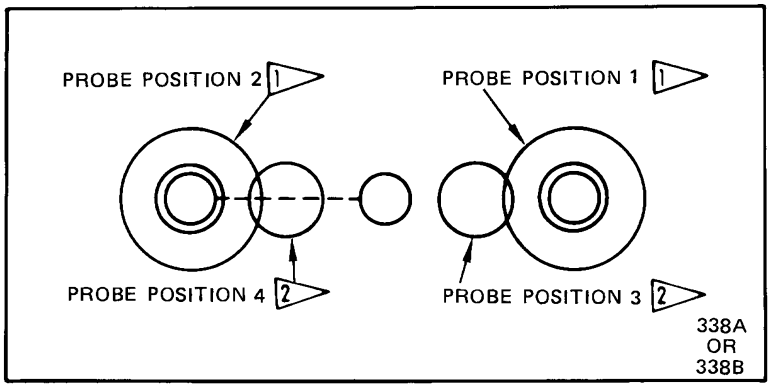

NOTES

1. PROBE POSITION FOR PROBE P/N SP0996
2. PROBE POSITION FOR PROBE P/N SPO1391. THIS PROBE IS USED ONLY WITH REFERENCE STANDARD 338A

2159325 S0000471900_V1

Probe Calibration Positions for Reference Standards 338A and 338B
Figure 2

BOEING PROPRIETARY - Copyright © Unpublished Work - See title page for details

2159326 S0000471901_V1

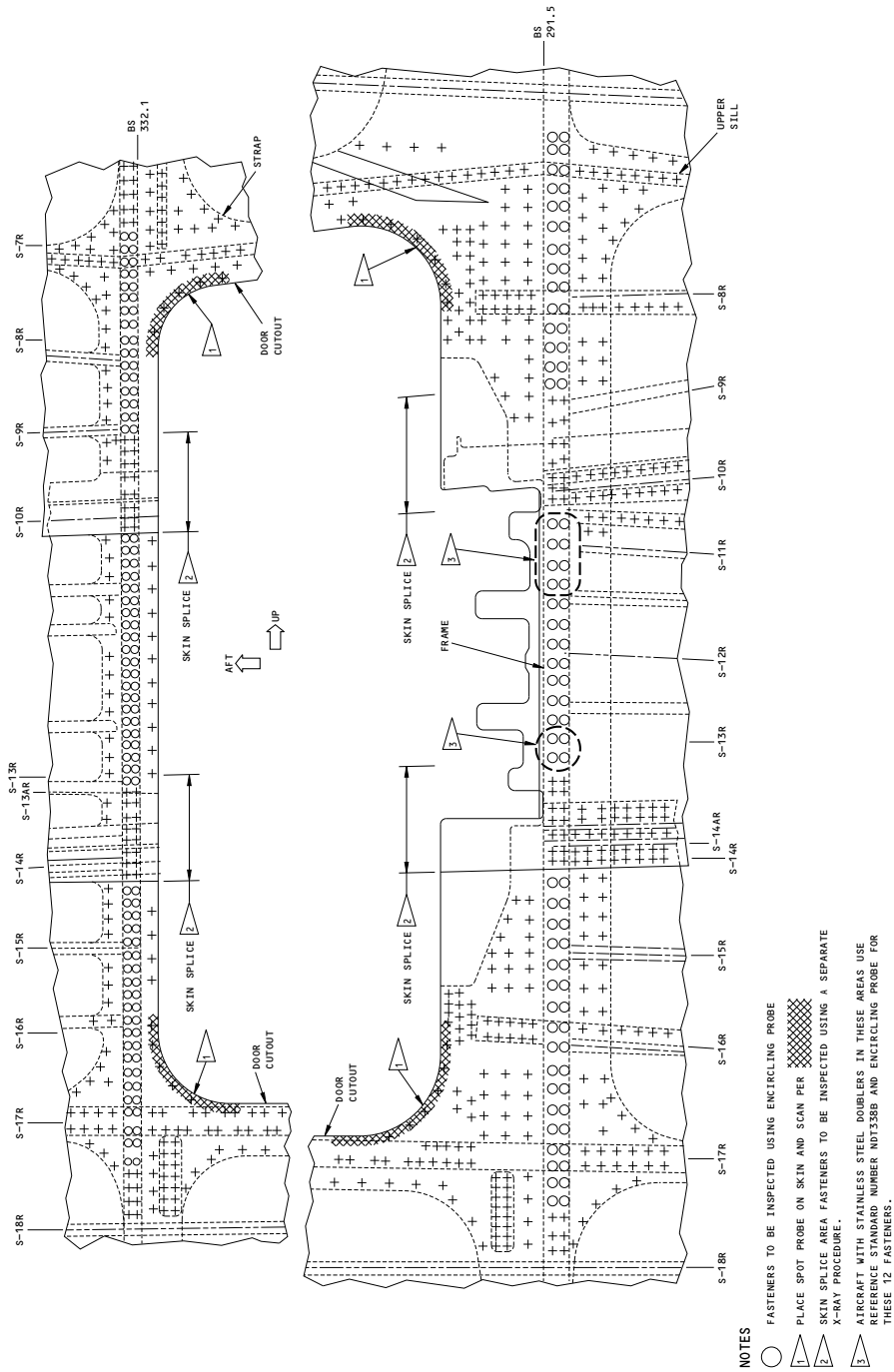

Forward Galley Door Cutout - BS 291.5 to BS 332.1
Figure 3

BOEING PROPRIETARY - Copyright © Unpublished Work - See title page for details

PART 6 - EDDY CURRENT

FORWARD LOWER ACCESS DOOR CUTOUT (HFEC)

1. **Purpose**
   A. To detect cracks in frame chord skin flange of forward lower access door cutout at BS 203.8 and BS 219.8 using high frequency eddy current.
   B. 737 Supplemental Structural Inspection Document (D6-37089) Reference:
      (1) Item: F-19
2. **Equipment**
   A. Any eddy current instrument and probe combination that satisfies the performance requirements of this procedure is suitable for this inspection. The following equipment was used in the development of this procedure.
      (1) Instrument - ED520, Magnaflux, Corp. - Refer to Part 6, 51-00-00, Procedure 4.
      (2) Probe - Shielded, right angle pencil probe per Part 6, 51-00-00, Procedure 4.
   B. Reference Standard - Refer to Part 6, 51-00-00, Procedure 4.

      NOTE: Refer to Part 1, 51-01-00, for information on equipment manufacturers.
3. **Prepare for the Inspection**
   A. Open forward access door.
   B. Clean surfaces at inspection area. See Figure 1.
4. **Instrument Calibration**
   A. Refer to Part 6, 51-00-00, Procedure 4.
5. **Inspection Procedure**
   A. Inspect per Figure 1.
   B. Perform inspection scans per Part 6, 51-00-00, Procedure 4.
6. **Inspection Results**
   A. A rapid meter movement occurring as probe is moved over a short distance is a potential crack indication and further investigation is required.
   B. Refer to Part 6, 51-00-00, Procedure 4.

BOEING PROPRIETARY - Copyright © Unpublished Work - See title page for details

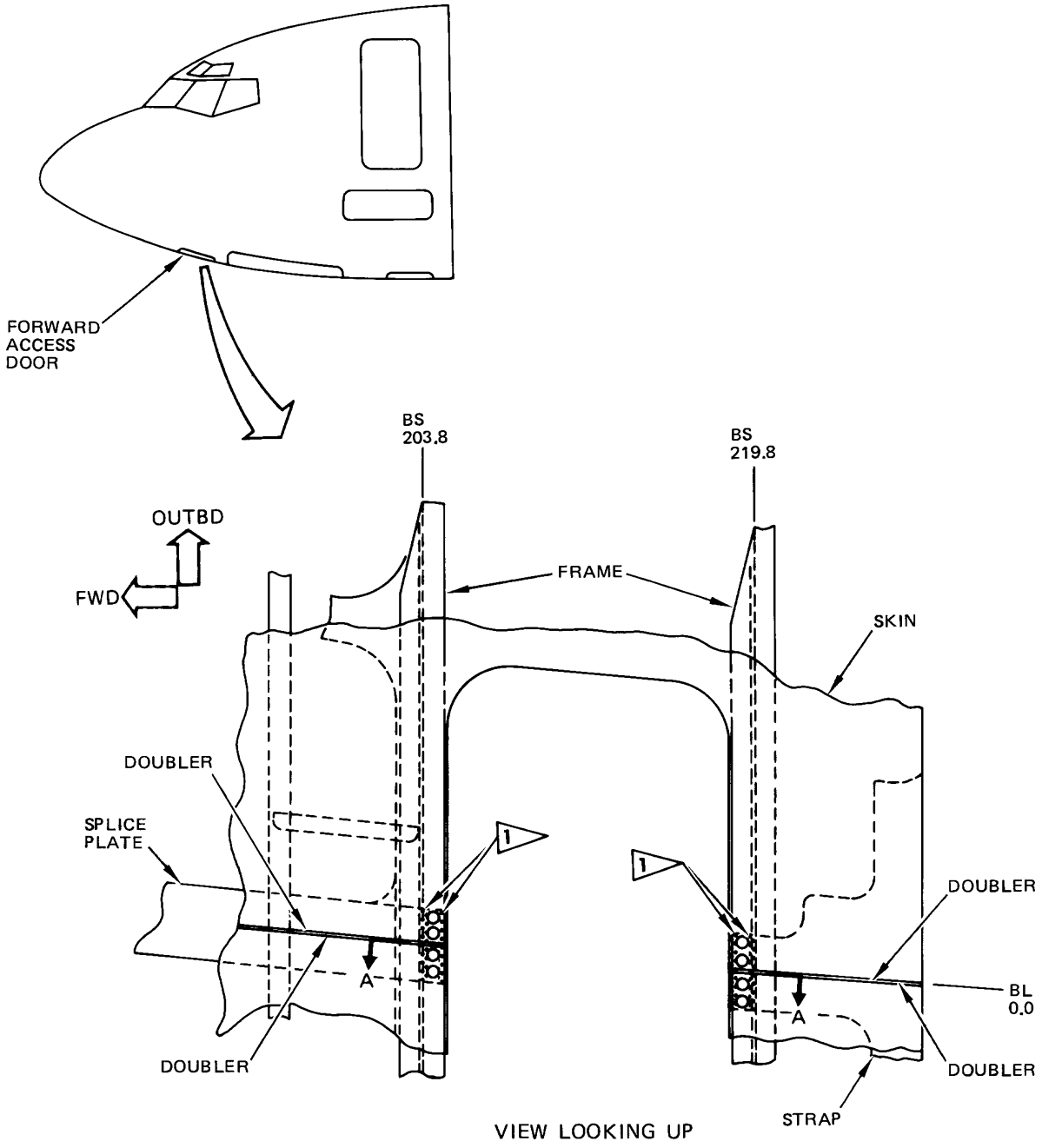

2159327 S0000471904_V1

Forward Access Door Cutout
Figure 1 (Sheet 1 of 2)

BOEING PROPRIETARY - Copyright © Unpublished Work - See title page for details

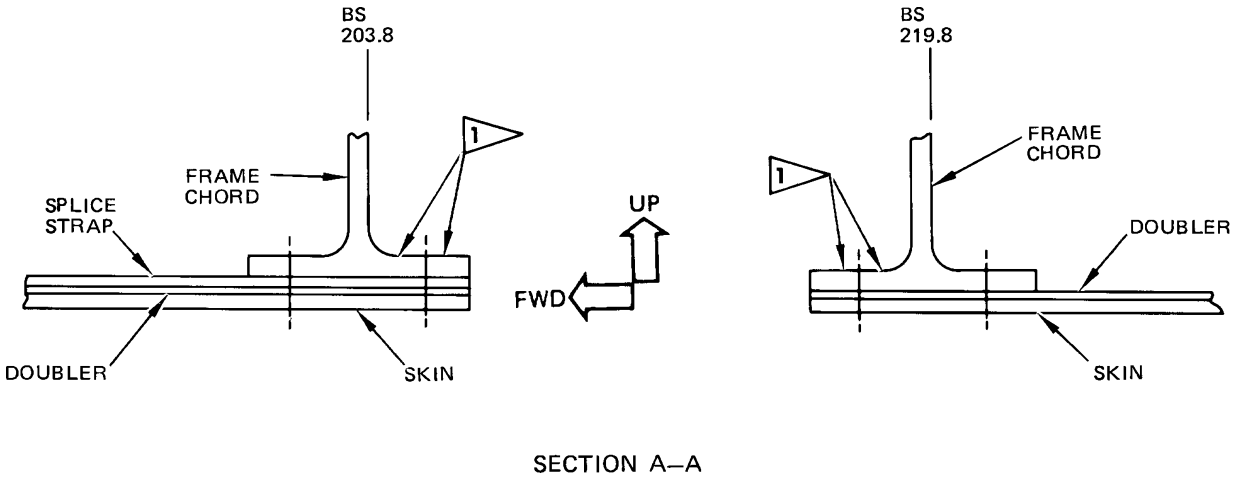

NOTES

INSPECTION AREA

FASTENERS TO BE INSPECTED

1 PLACE PROBE ON INNER SURFACE OF FRAME CHORD AND SCAN PAST INSPECTION FASTENERS PER

2159328 S0000471905_V1

Forward Access Door Cutout
Figure 1 (Sheet 2 of 2)

BOEING PROPRIETARY - Copyright © Unpublished Work - See title page for details

PART 6 - EDDY CURRENT

FORWARD ENTRY DOOR CUTOUT WITH AND WITHOUT AIRSTAIRS (LFEC)

1. Purpose

A. To detect cracks in reinforcing strap and/or frame outer chord at BS 303.9, 348.2 and 351.2 of the forward entry door cutout and airstair door cutout (if applicable) using low frequency eddy current.

B. Service Bulletin Reference: 737-53-1058

C. 737 Supplemental Structural Inspection Document (D6-37089) Reference:

(1) Item: F-13

(2) Item: F-14

2. Equipment

A. Instrument - Any eddy current instrument that satisfies the performance requirements of this procedure is suitable for this inspection. The following equipment was used in development of this procedure.

(1) MIZ-10 or MIZ-10A; Zetec Inc.

B. Probes - This procedure uses two types of probes (spot and ring). Any probes of similar size that satisfies performance requirements of this procedure are acceptable. The following probes were used in development of this procedure:

(1) Spot probe P/N SPO 565A, with 0.45 (1.14 cm) OD case, usable at 800 Hz and 1.8 kHz; Nortec, Inc.

(2) Ring (encircling) probe with 0.30-inch (0.76 cm) ID, 0.75-inch (1.91 cm) OD, shielded, usable at 350 Hz and 600 Hz, P/N SPO 996; Nortec Inc.

(3) Ring probe with 0.30 inch (0.76 cm) ID, P/N RR 058-1; NDT Eng. Corp.

NOTE: Refer to Part 1, 51-06-00, for a general description of low frequency probe configurations.

C. Reference Standards - Manufacture Reference Standards 328A, 328B, 328C and 328D per Figure 2 and Figure 3 and NDT3078 per Figure 4.

NOTE: Refer to Part 1, 51-01-00, for information on equipment manufacturers.

3. Prepare for the Inspection

A. Clean inspection surface and remove loose paint.

B. Remove scuff plates.

4. Instrument Calibration

A. Calibrate for fastener hole cracks in the reinforcing strap and frame outer chord using ring probe centered on the fastener. Refer to Figure 7 for the Inspection Code "C" and "D" areas.

(1) Use the Calibration Table in Figure 1 to identify the correct reference standard to use for the applicable airplane model.

(2) Set instrument frequency per Figure 1.

(3) Visually center probe over unnotched reference standard hole, Position 1, Figure 6, and manipulate until minimum meter reading is obtained.

(4) Balance instrument per manufacturer's instructions.

BOEING PROPRIETARY - Copyright © Unpublished Work - See title page for details

(5) Adjust liftoff control per manufacturer's instructions to obtain the same response when probe is on bare standard as when probe is lifted off part by 0.006 inch (approximately the thickness of two sheets of paper).

NOTE: Probe is visually centered over unnotched hole during liftoff calibration.

(a) Obtain minimum meter reading.

(6) Recenter probe over unnotched hole and manipulate probe, adjusting balance as necessary, until a minimum meter reading is obtained. Adjust meter response to read 20% of full scale with meter position control.

(7) Center probe over the notched reference standard hole, Position 2. See Figure 6. Response should be upscale.

(8) Adjust instrument sensitivity to obtain 70% of full scale meter response, or 50% meter response difference, between notched and unnotched locations (Positions 1 and 2).

(9) Recheck null and liftoff. If readjustments are made, recheck sensitivity per Paragraph 4.A.(8).

(10) Cracks will be indicated by a high meter response.

B. Calibration for fastener hole crack inspection in the reinforcing strap using low frequency spot probe. Refer to Figure 7 for the Inspection Code "A" and "B" areas.

(1) Use the Calibration Table in Figure 1 to identify the correct reference standard to use for the applicable airplane model.

(2) Connect probe and set instrument frequency per Figure 1.

(3) Place probe on reference standard per Position 1, Figure 5.

(4) Balance instrument per manufacturer's instructions.

(5) Adjust liftoff control per manufacturer's instructions to obtain the same response when the probe is on bare standard as when probe is lifted off part by 0.006 inch (approximately the thickness of two sheets of paper).

NOTE: The probe is located at Position 1 during liftoff calibration.

(6) Keep probe at Position 1 and use meter position control to adjust meter response to indicate 20% of full scale.

(7) Position or scan probe over notched portion of reference standard. Meter response should be upscale. Refer to Position 2 of Figure 5.

(8) Adjust instrument sensitivity to obtain 70% of full scale meter response, or 50% meter response difference between notched and unnotched locations (Positions 1 and 2).

(9) Reposition probe at Position 1 and recheck balance and liftoff. If readjustments are made, recheck sensitivity per Paragraph 4.B.(7) and Paragraph 4.B.(8).

5. Inspection Procedure

A. Inspection of fastener holes for cracks in the reinforcing strap and frame outer chord using ring probe centered on fastener (Inspection Codes C and D). See Figure 7.

(1) Calibrate instrument per Paragraph 4.A.

(2) Establish airplane baseline response for a particular inspection code.

(a) Use a minimum of two inspection fasteners to establish airplane baseline response for an acceptable fastener.

BOEING PROPRIETARY - Copyright © Unpublished Work - See title page for details

(b) Select a representative location from this group and set its response to 20% of full meter scale.

NOTE: Do not change instrument sensitivity when establishing the airplane baseline response.

(c) Refer back to this location periodically to ensure that instrument response is the same as originally recorded. (Changes in meter response may occur as a result of instrument drift or probe temperature change.)

(3) Inspect each fastener, of same code, by visually centering probe on fastener and manipulating probe about visual center to obtain minimum meter response.

B. Inspection of fastener holes for cracks in the reinforcing strap using low frequency eddy current spot probe (Inspection Codes A and B). See Figure 7.

(1) Calibrate instrument per Paragraph 4.B.

(2) Establish airplane baseline response for a particular inspection code.

(a) Establish a baseline response for an acceptable crack free area by comparing a minimum of two locations on each frame or strap location.

(b) Select a representative location from this group and set its response to 20% full scale on meter.

NOTE: Do not change instrument sensitivity when establishing the aircraft baseline response.

(c) Refer back to this location periodically to ensure that instrument response is the same as originally recorded. (Changes in meter response may occur as a result of instrument drift or probe temperature change.)

(3) Scan areas per Figure 7.

6. Inspection Results

A. Any location which gives a meter deflection 30% of full scale above the baseline response, whether it occurs with a stationary or scanning probe, is a potential crack which requires further investigation.

(1) The following conditions may cause meter reading changes similar to crack indications.

(a) A decrease in fastener spacing - Compare with similarly spaced fasteners on airplane or on reference standard.

(b) Placing probe too close to or scanning over the edge of skin or subsurface structure - Check locations per Figure 6 and compare with a similar location on airplane.

(c) Difference in conductivity between skin panels - Compare only inspection locations common to the same skin panel(s).

(d) Placing or scanning probe too close to a magnetic steel fastener - Compare response obtained with probe near a similar fastener, or by scanning the probe around fastener at a constant distance away from it.

(e) Magnetic metal chips in paint - Remove paint and reinspect.

(f) Difference in fastener material (magnetic versus non-magnetic) - confirm by using a permanent magnet to determine the magnetic properties of the fasteners. If fastener material is different, complete recalibration is required. Remove and replace fasteners in reference standard with the same type of fastener as found in the aircraft and recalibrate. Contact the Boeing Commercial Airplane Company for further instructions.

BOEING PROPRIETARY - Copyright © Unpublished Work - See title page for details

(2) When investigating crack-like indications, compare meter response obtained at same location on another airplane of same configuration.

(3) A downscale (lower) meter reading is an indication of metal thickening which indicates probe is over a beam chord or stiffener flange.

BOEING PROPRIETARY - Copyright © Unpublished Work - See title page for details

CALIBRATION TABLE				
AIRPLANE MODEL	INSPECTION CODE	REFERENCE STANDARD - CALIBRATION LOCATION	INSTRUMENT FREQUENCY	PROBE
-100/-200 PASSENGER AND CARGO	A	328A	1.8 kHz	SPOT
	B	328B	800 Hz	SPOT
-100/-200 PASSENGER	C	328C	600 Hz	RING
	D	328D	350 Hz	RING
-200 CARGO	C	NDT3078-C	400 Hz	RING
	D	NDT3078-D	250 Hz	RING

NOTES:

1 INSPECT PER FIGURE 6, FLAGNOTES 1, 2 AND 3

2 INSPECT PER FIGURE 6, FLAGNOTES 4 AND 5

2159352 S0000471907_V2

Calibration Table
Figure 1

BOEING PROPRIETARY - Copyright © Unpublished Work - See title page for details

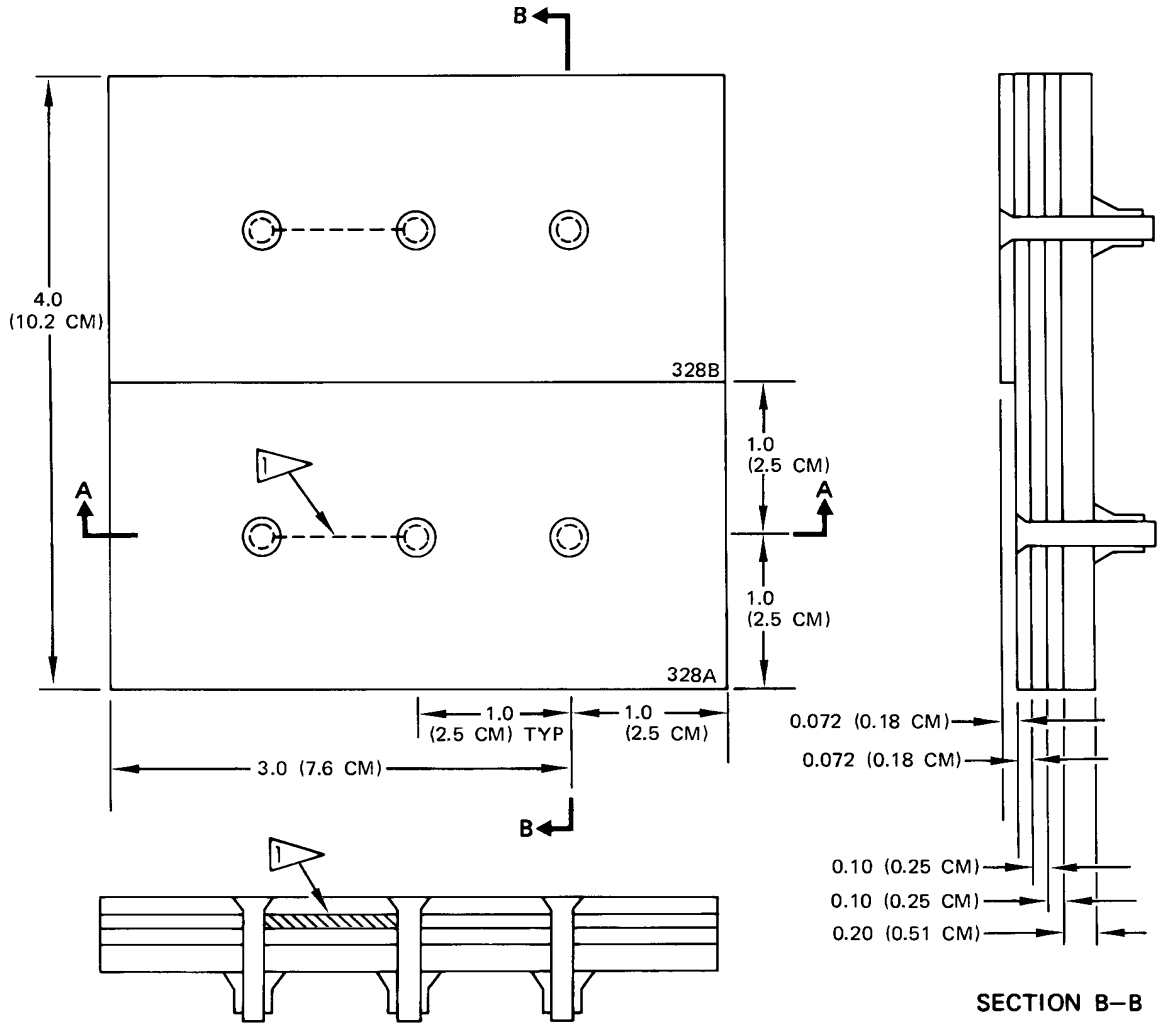

NOTES

- ALL DIMENSIONS ARE IN INCHES (CENTIMETERS IN PARENTHESES)
- TOLERANCE: X.X ± 0.05 (0.13 CM), X.XX ± 0.02 (0.05 CM), X.XXX ± 0.005 (0.013 CM)
- MATERIAL: 2024–T3 OR – T4 ALUMINUM
- FASTENERS: BACB30FN6AX HI–LOK BOLT, BACC30M6 COLLAR (6 PLACES)
- ETCH OR STEEL STAMP WITH 328A AND 328B
- P/N 6412–245 AVAILABLE FROM IDEAL SPECIALTY CO.

1 JEWELER'S SAWCUT 0.030 (0.08 CM) MAX WIDTH

2159353 S0000471908_V1

Reference Standard 328A and 328B
Figure 2

BOEING PROPRIETARY - Copyright © Unpublished Work - See title page for details

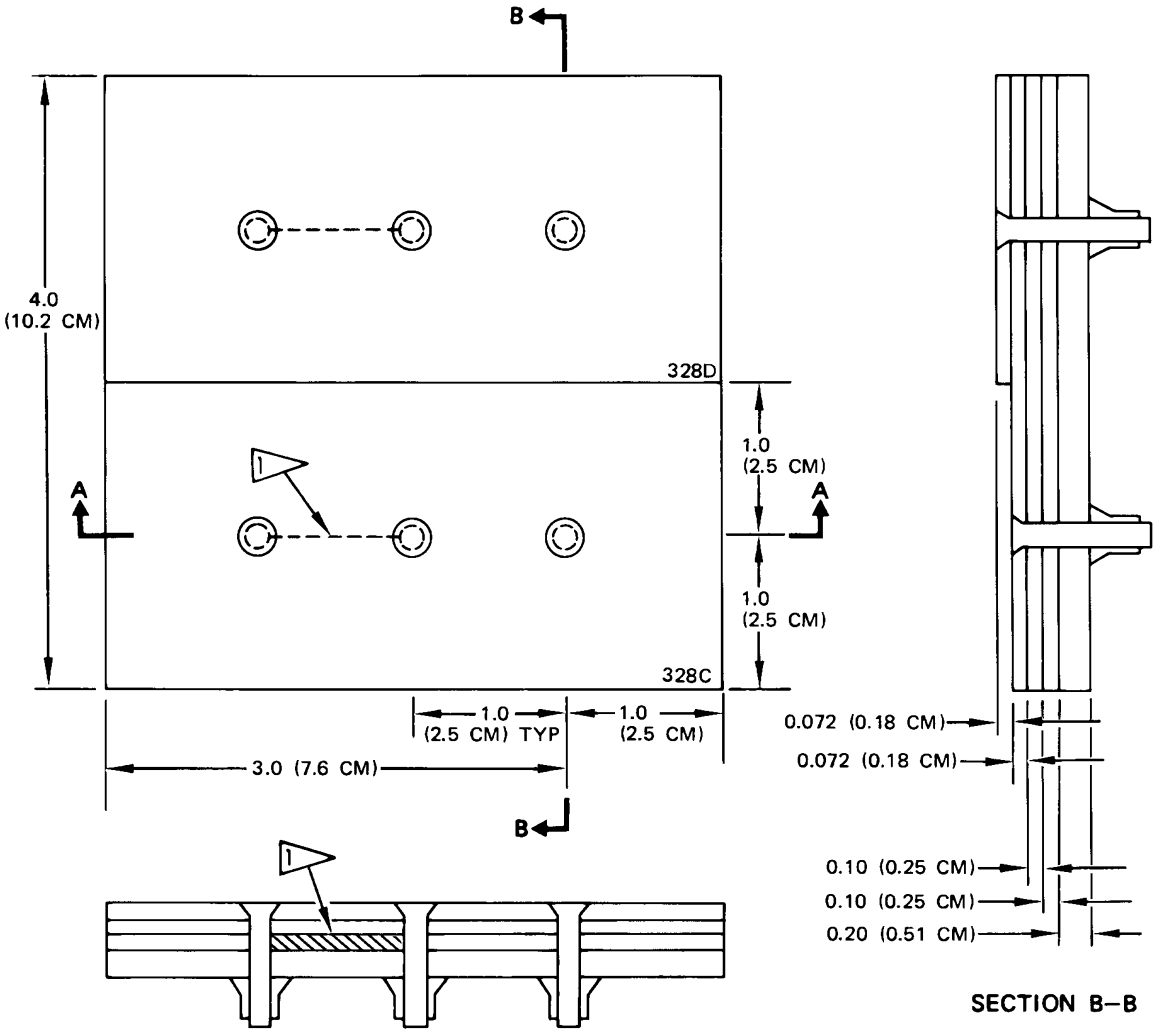

NOTES

- ALL DIMENSIONS ARE IN INCHES (CENTIMETERS IN PARENTHESES)
- TOLERANCE: X.X ± 0.05 (0.13 CM), X.XX ± 0.02 (0.05 CM), X.XXX ± 0.005 (0.013 CM)
- MATERIAL: 2024–T3 OR – T4 ALUMINUM
- FASTENERS: BACB30FN6AX HI–LOK BOLT, BACC30M6 COLLAR (6 PLACES)
- ETCH OR STEEL STAMP WITH 328C AND 328D
- P/N 6412–248 AVAILABLE FROM IDEAL SPECIALTY CO.

1 JEWELER'S SAWCUT 0.030 (0.08 CM) MAX WIDTH

2159356 S0000471909_V1

Reference Standard 328C and 328D
Figure 3

BOEING PROPRIETARY - Copyright © Unpublished Work - See title page for details

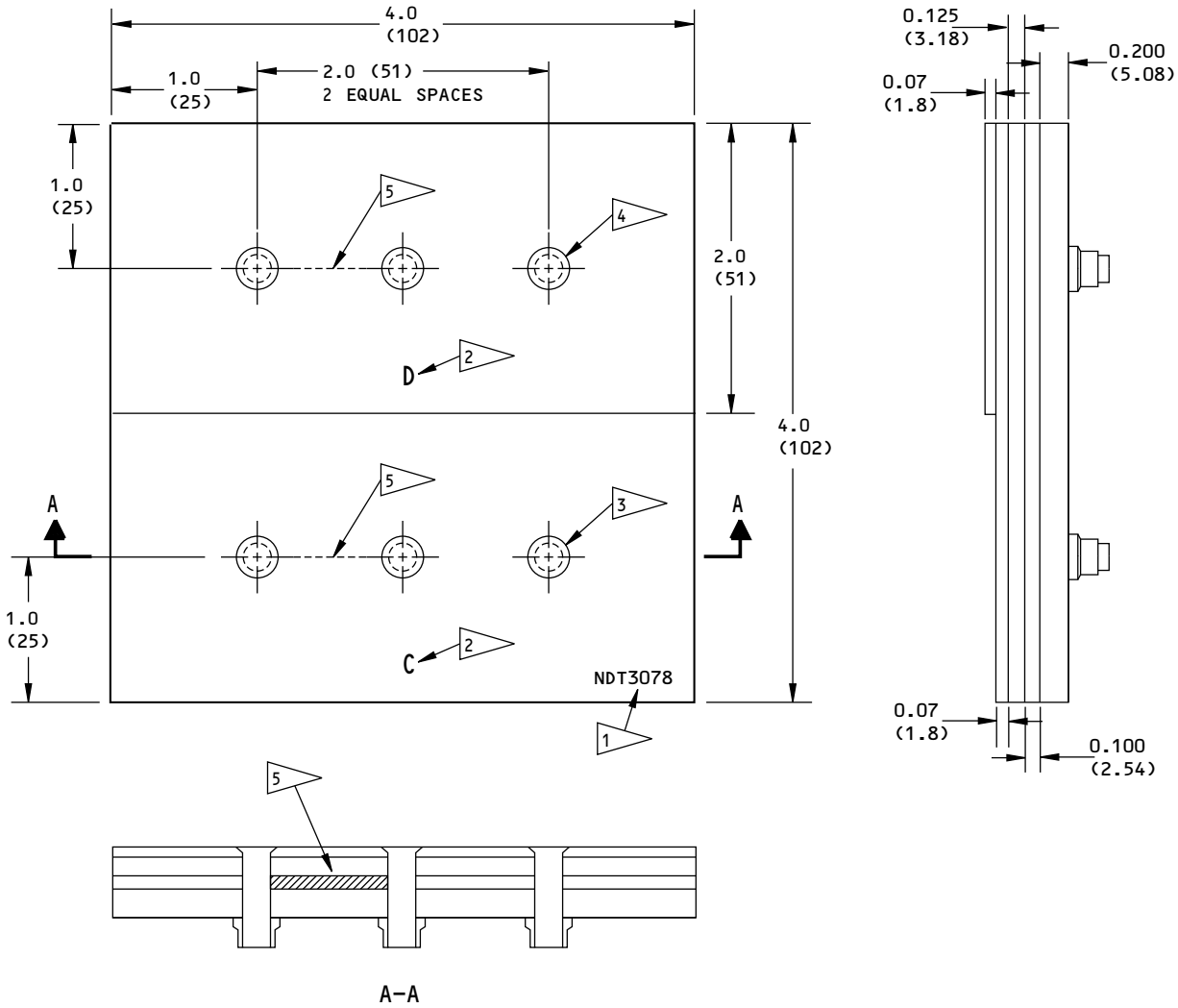

NOTES:

- ALL DIMENSIONS ARE IN INCHES (MILLIMETERS ARE IN PARENTHESES)
- TOLERANCES: (UNLESS SPECIFIED DIFFERENTLY)

INCHES	MILLIMETERS
X.XXX = ±0.005	X.XX = ±0.10
X.XX = ±0.025	X.X = ±0.5
X.X = ±0.050	X = ±1

- NOTCH LOCATION TOLERANCE:
  THE NOTCH LOCATION MUST BE WITHIN ±0.005 (±0.10) OF THE CENTERLINE OF THE HOLE AS SHOWN.
- MATERIAL: 2024-T3 OR -T4 ALUMINUM (CLAD)
- SURFACE ROUGHNESS: 63 Ra OR BETTER

1. ETCH OR STEEL STAMP THE REFERENCE STANDARD NUMBER NDT3078
2. ETCH OR STEEL STAMP THE LETTER SHOWN TO IDENTIFY THE CALIBRATION LOCATION TO USE FOR THE INSTRUMENT CALIBRATION.
3. FASTENER: BACB30FN6A8 (3 LOCATIONS)
   COLLAR: BACC30M6
4. FASTENER: BACB30FN6A9 (3 LOCATIONS)
   COLLAR: BACC30M6
5. EDM NOTCH:
   LENGTH: HOLE-TO-HOLE
   DEPTH: THROUGH THICKNESS
   WIDTH: 0.007 (0.18) ±0.002 (0.05)

2159359 S0000471910_V1

Reference Standard NDT3078
Figure 4

BOEING PROPRIETARY - Copyright © Unpublished Work - See title page for details

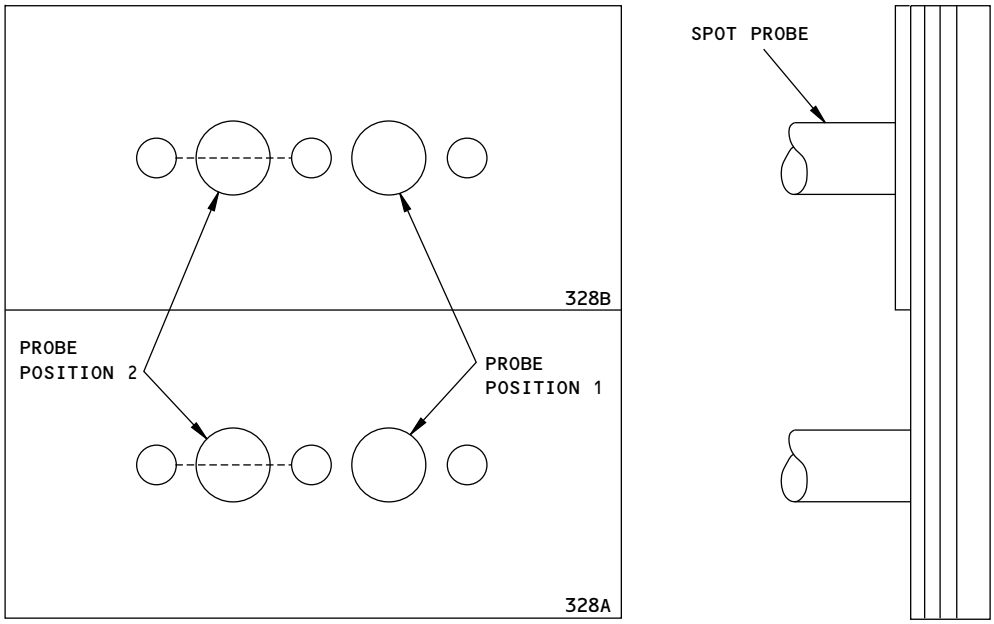

2159360 S0000471911_V1

Spot Probe Calibration Positions on Reference Standard 328A and 328B
Figure 5

BOEING PROPRIETARY - Copyright © Unpublished Work - See title page for details

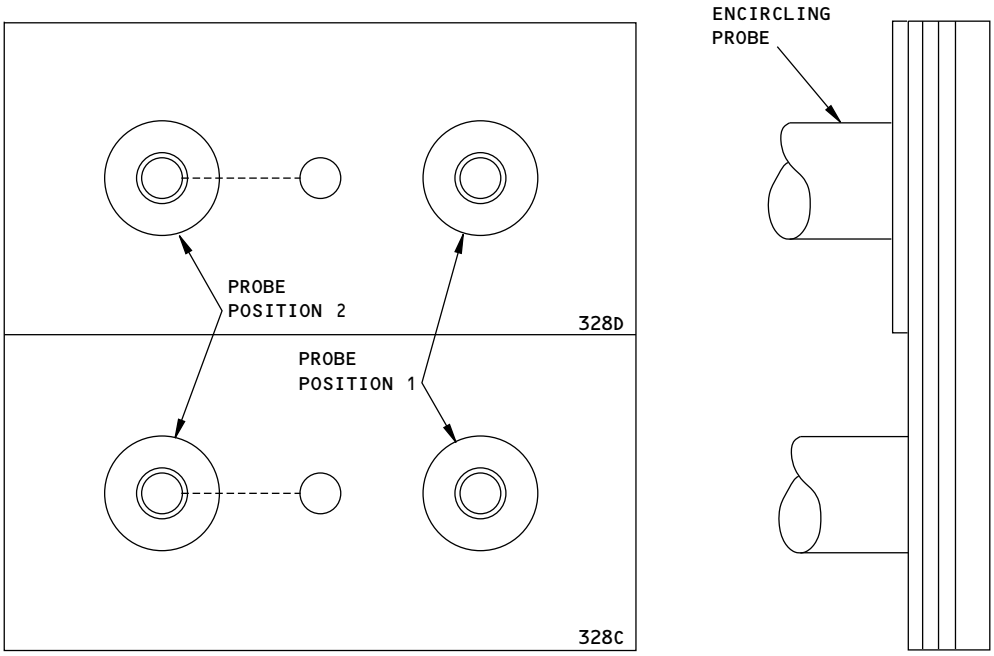

NOTES:

- REFERENCE STANDARDS 328C AND 328D (SHOWN ABOVE) ARE USED TO EXAMINE -100/-200 PASSENGER AIRPLANES ONLY. REFERENCE STANDARD NDT3078 (NOT SHOWN) IS USED TO EXAMINE -200C AIRPLANES ONLY. PROBE POSITIONS 1 AND 2 ARE THE SAME WHEN REFERENCE STANDARD NDT3078 IS USED.

2159362 S0000471912_V1

Ring (Encircling) Probe Calibration Positions on Reference Standard 328C, 328D and NDT3078
Figure 6

BOEING PROPRIETARY - Copyright © Unpublished Work - See title page for details

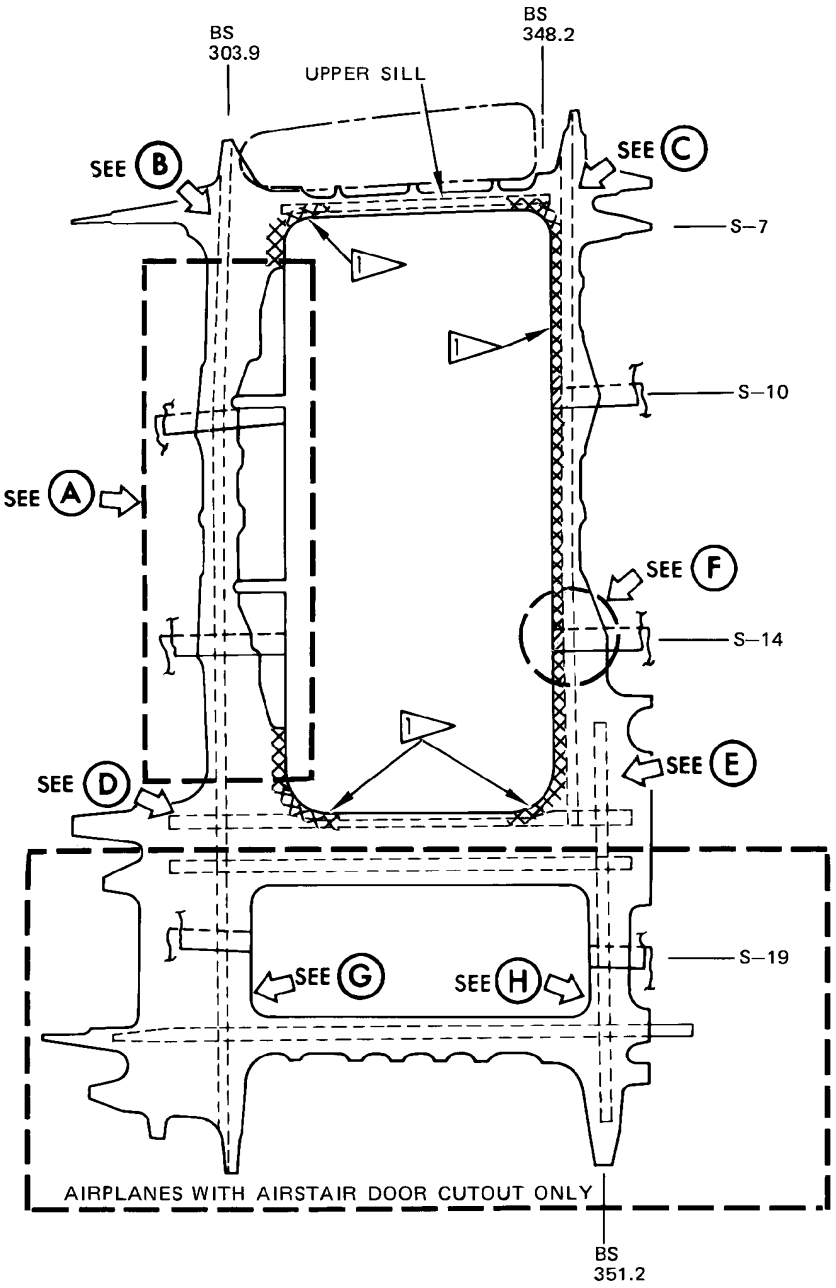

NOTES

- AIRPLANES WITH AIRSTAIR DOOR CUTOUT INSPECT PER VIEWS A THRU H
- AIRPLANES WITHOUT AIRSTAIR DOOR CUTOUT INSPECT PER VIEWS A THRU F ONLY

1 FOR ALL AIRPLANES, PLACE SPOT PROBE P/N SPO 565A ON SKIN AND SCAN EXTERIOR PER XXXX AND INSPECTION CODE A, USING CALIBRATION PER PAR. 4.B.

2159363 S0000471914_V1

Forward Entry Door Cutout
Figure 7 (Sheet 1 of 7)

BOEING PROPRIETARY - Copyright © Unpublished Work - See title page for details

2159366 S0000471915_V2

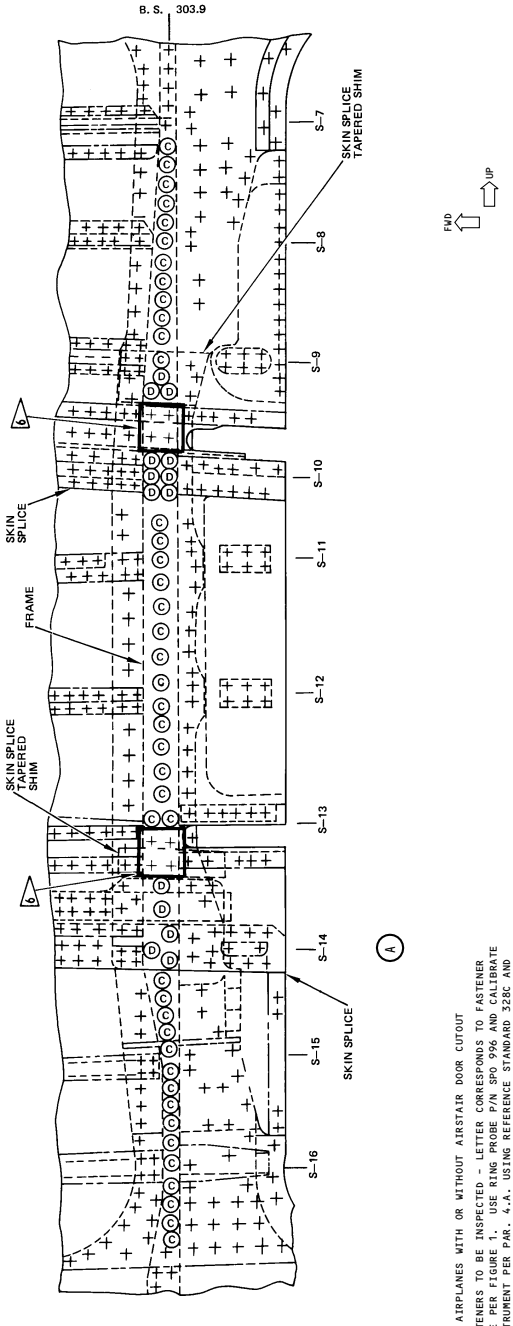

NOTES:

- FOR AIRPLANES WITH OR WITHOUT AIRSTAIR DOOR CUTOUT
- (C) FASTENERS TO BE INSPECTED - LETTER CORRESPONDS TO FASTENER CODE PER FIGURE 1. USE RING PROBE P/N SPO 996 AND CALIBRATE INSTRUMENT PER PAR. 4.A. USING REFERENCE STANDARD 328C AND 328D FOR PASSENGER AIRPLANES AND ND75078 FOR CARGO AIRPLANES.

NOTE: PAY PARTICULAR ATTENTION TO FALSE INDICATIONS FROM EDGES OF TAPERED FILLERS, DOUBLERS, SKIN, ETC. COMPARE WITH INDICATIONS FROM OTHER AIRPLANES PER PAR. 6.A.(2).

6 INSPECTION IN THIS AREA IS ACCOMPLISHED BY A SEPARATE HIGH FREQUENCY EDDY CURRENT PROCEDURE.

Forward Entry Door Cutout
Figure 7 (Sheet 2 of 7)

BOEING PROPRIETARY - Copyright © Unpublished Work - See title page for details

2159367 S0000471916_V1

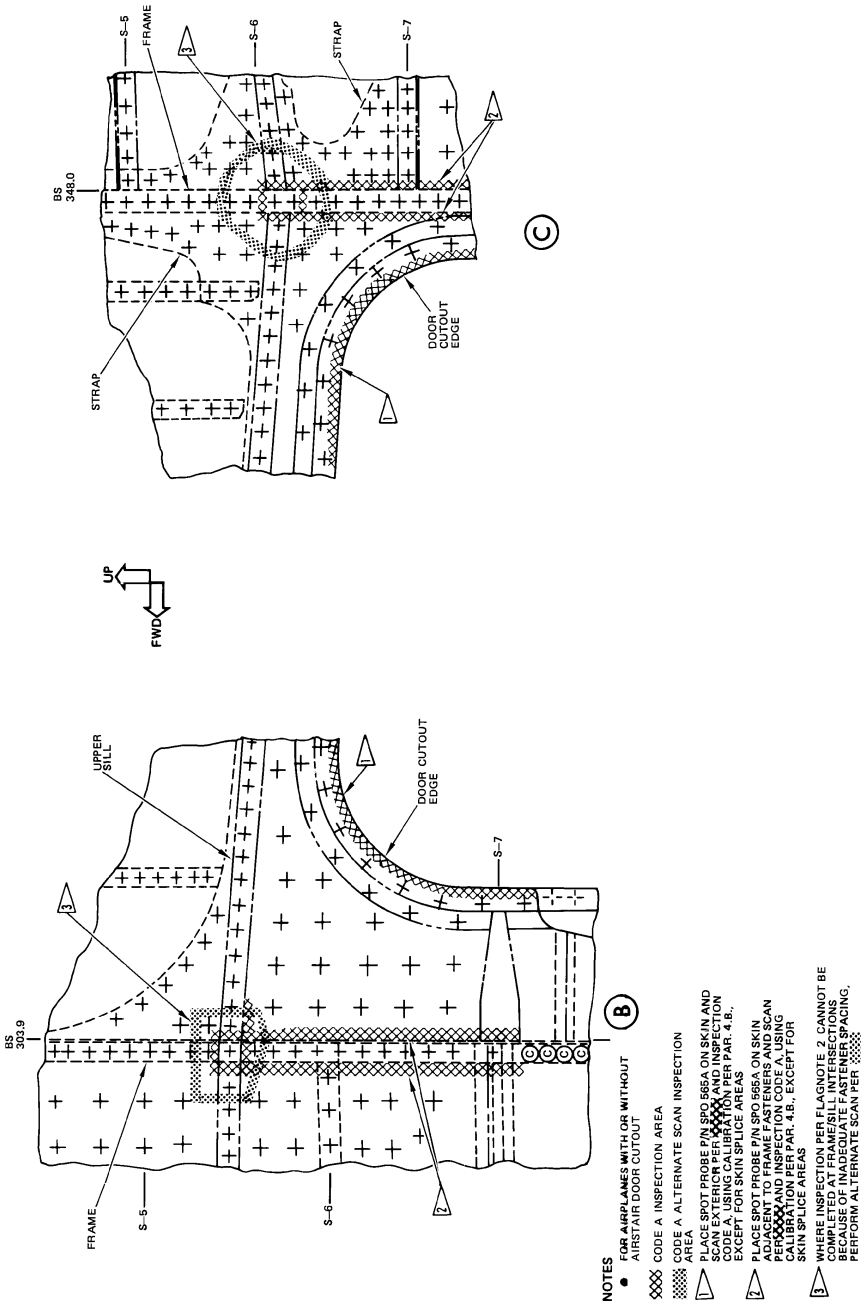

Forward Entry Door Cutout
Figure 7 (Sheet 3 of 7)

BOEING PROPRIETARY - Copyright © Unpublished Work - See title page for details

2159368 S0000471917_V2

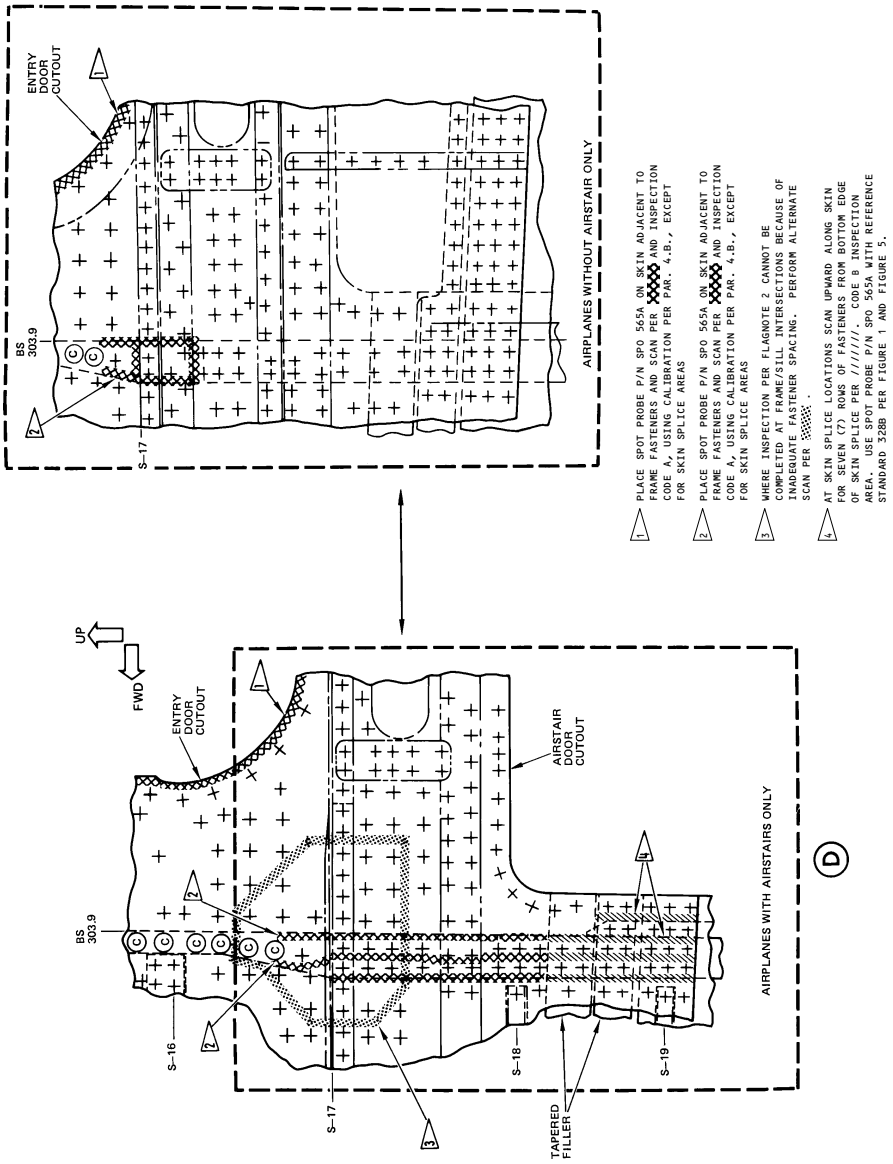

Forward Entry Door Cutout
Figure 7 (Sheet 4 of 7)

BOEING PROPRIETARY - Copyright © Unpublished Work - See title page for details

2159369 S0000471918_V2

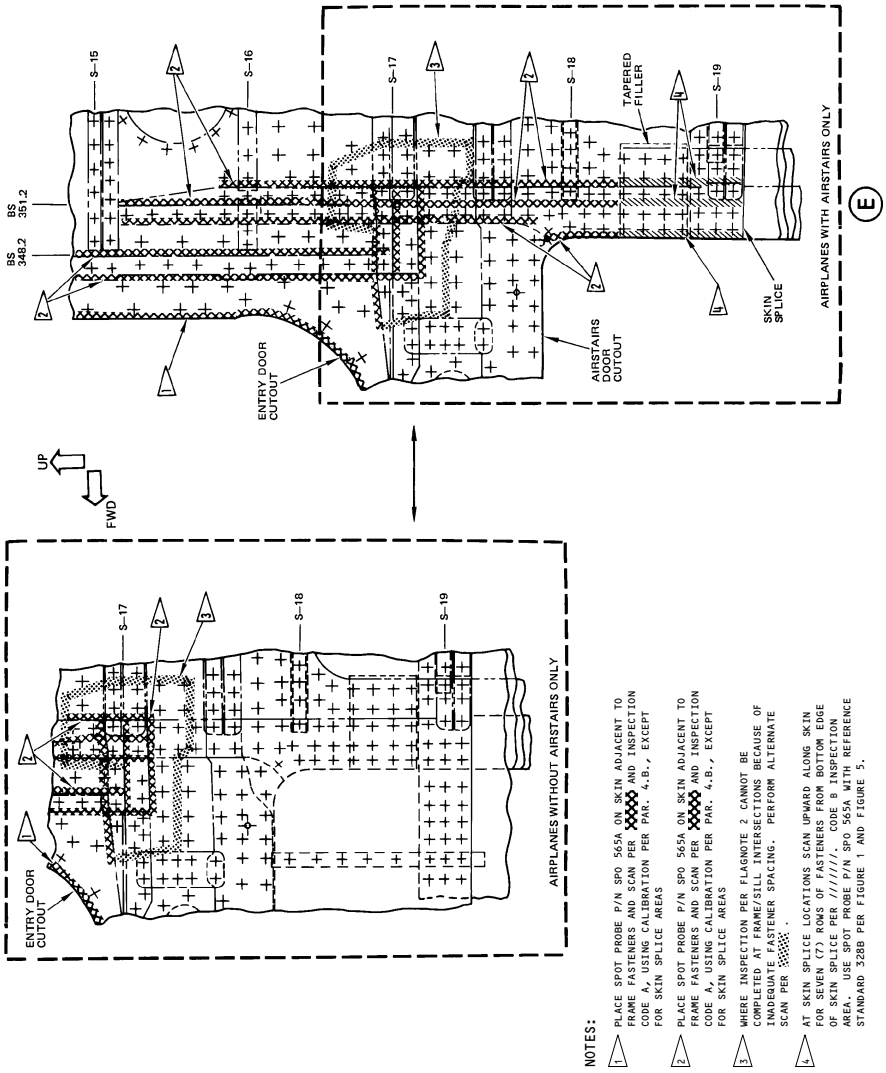

Forward Entry Door Cutout
Figure 7 (Sheet 5 of 7)

BOEING PROPRIETARY - Copyright © Unpublished Work - See title page for details

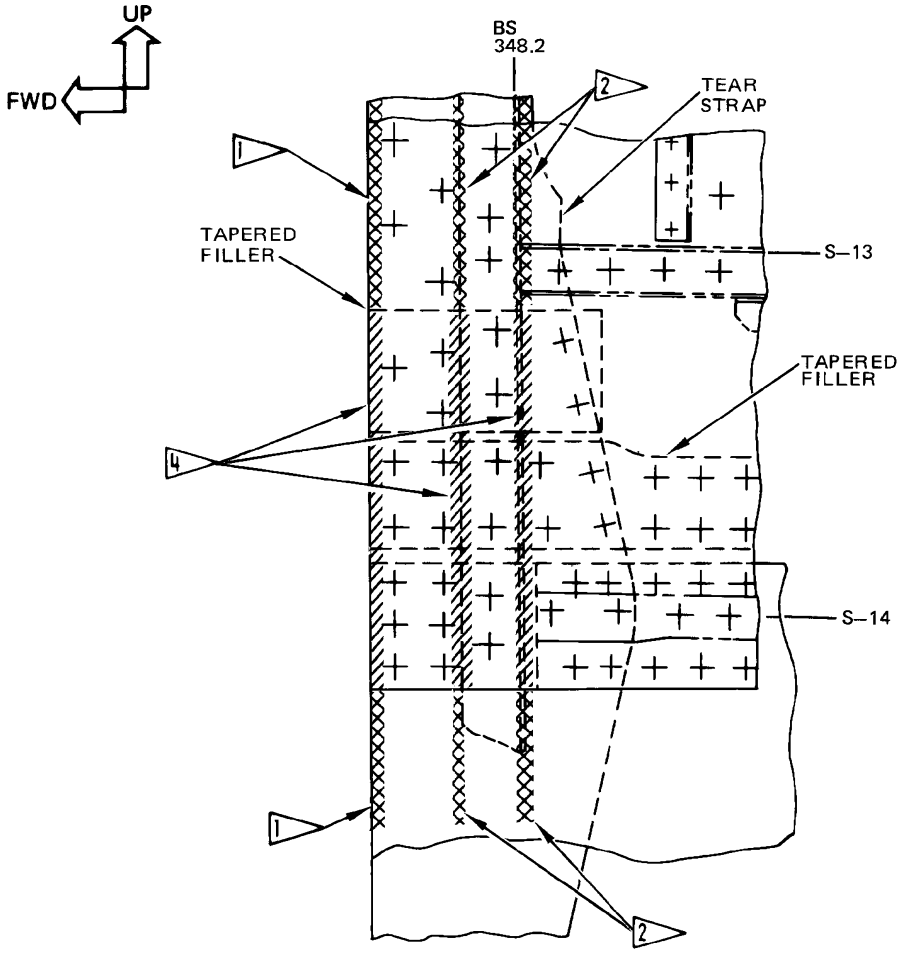

TYPICAL SKIN SPLICE AT STRINGERS S–10 AND S–14

F

NOTES:

- FOR AIRPLANES WITH OR WITHOUT AIRSTAIR DOOR CUTOUT

1 PLACE SPOT PROBE P/N SPO 565A ON SKIN AND SCAN EXTERIOR EDGE PER XXXXX AND INSPECTION CODE A, USING CALIBRATION PER PAR. 4.B., EXCEPT FOR SKIN SPLICE AREAS

2 PLACE SPOT PROBE P/N SPO 565A ON SKIN ADJACENT TO FRAME FASTENERS AND SCAN PER XXXXX AND INSPECTION CODE A, USING CALIBRATION PER PAR. 4.B., EXCEPT FOR SKIN SPLICE AREAS

4 AT SKIN SPLICE LOCATIONS SCAN UPWARD ALONG SKIN FOR SEVEN (7) ROWS OF FASTENERS FROM BOTTOM EDGE OF SKIN SPLICE PER ///////. CODE B INSPECTION AREA. USE SPOT PROBE P/N SPO 565A WITH REFERENCE STANDARD 328B PER FIGURE 1 AND FIGURE 5.

2159370 S0000471919_V2

Forward Entry Door Cutout
Figure 7 (Sheet 6 of 7)

BOEING PROPRIETARY - Copyright © Unpublished Work - See title page for details

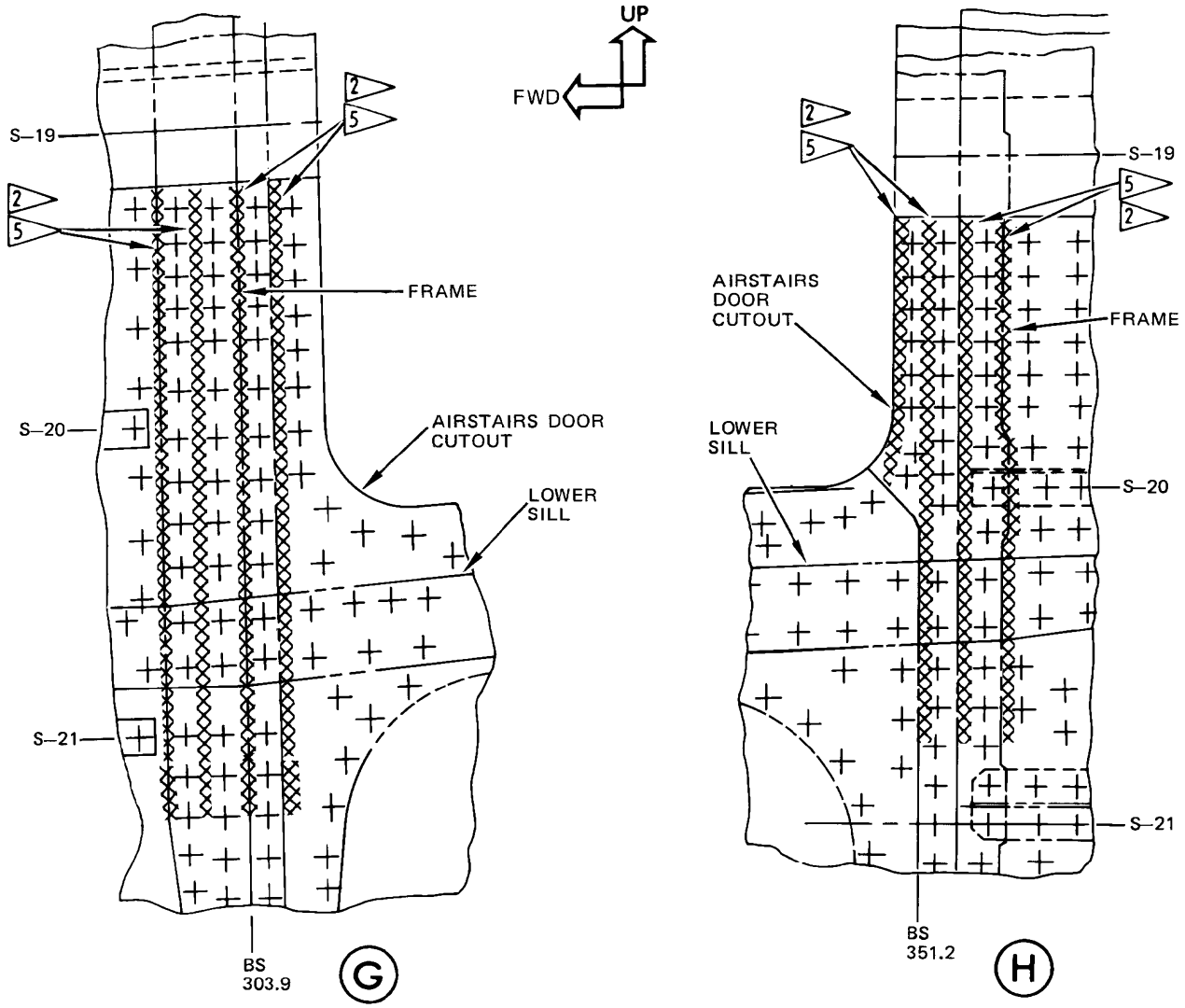

NOTES

- VIEWS G AND H SHOWN FOR AIRPLANES WITH AIRSTAIRS ONLY

2 SCAN ALONG SKIN ADJACENT TO FRAME FASTENERS PER USE SPOT PROBE P/N SPO 565A WITH REFERENCE STANDARD 328A PER FIGURE 1 AND FIGURE 5.

5 FOR AIRPLANES WITH EXTERNAL DOUBLERS AROUND THE BOTTOM EDGE OF THE AIRSTAIRS DOOR CUTOUT SCAN ALONG DOUBLER ADJACENT TO FRAME PER USE SPOT PROBE P/N SPO 565A WITH REFERENCE STANDARD 328B PER FIGURE 1 AND FIGURE 5.

2159371 S0000471920_V2

Forward Entry Door Cutout
Figure 7 (Sheet 7 of 7)

BOEING PROPRIETARY - Copyright © Unpublished Work - See title page for details

PART 6 - EDDY CURRENT

FORWARD ENTRY DOOR CUTOUT WITH AND WITHOUT AIRSTAIRS (HFEC)

1. Purpose

A. Use this procedure to do a surface eddy current inspection to find cracks in the frames at BS 303.9, BS 348.2 and BS 351.2 between the upper and lower sills of the forward entry door. See Figure 1 for the inspection areas.

B. For airplanes with airstairs, use this procedure to do a surface eddy current inspection to find cracks in the frames at BS 303.9 and BS 351.2 between the upper and lower sills of the airstairs. See Figure 1 for the inspection areas.

C. Use this procedure to examine the inspection areas of the forward entry door only, as follows:

(1) Inner and outer chords of the frame at the frame-to-sill intersection of the upper and lower sills at BS 303.9 and 348.2 and the lower sill at BS 351.2.

(2) Outer chord and/or radius filler of the frame at all the door stop locations between stringers 6 and 16 at BS 303.9 and BS 348.2 and stringer 16 at BS 351.2.

(3) The strap between stringers 9 and 10 and stringers 13 and 14 at BS 303.9.

D. Use this procedure to examine the inspection areas of the forward airstair door as follows:

(1) Inner and outer chords of the frame at the frame-to-sill intersection of the upper and lower sills at BS 303.9 and 351.2.

(2) Outer chord of the frame at stringer 20 at BS 303.9 and stringers 18 thru 20 at BS 351.2.

E. This procedure uses an instrument with an impedance plane display or a meter display.

F. 737 Supplemental Structural Inspection Document (D6-37089) Reference:

(1) Item: F-13

(2) Item: F-14

2. Equipment

A. General

(1) Use inspection equipment that can be calibrated on the reference standard as specified in Paragraph 4.

(2) Refer to Part 1, 51-01-00, for data about the equipment manufacturers.

B. Instrument

(1) Use an eddy current instrument that:

(a) Has an impedance plane display or a meter display.

(b) Operates at a frequency range of 50 to 500 kHz

(2) The instruments that follow were used to help prepare this procedure.

(a) Phasec 2200 (impedance plane display); Hocking Krautkramer

(b) Nortec 19e, 1000, 2000 (impedance plane display); Staveley Instruments

(c) Elotest B1 (impedance plane display); Rohman GmbH

(d) MIZ 10B (meter display); Zetec Inc.

(e) Locator (meter display); Hocking

BOEING PROPRIETARY - Copyright © Unpublished Work - See title page for details

C. Probes

(1) Use a shielded, right angle, 0.125 inch (3.17 mm) diameter pencil probe with a drop length that is not more than 0.030 inch (0.76 mm). Refer to Part 6, 51-00-00, Procedure 4, paragraph. 3.B., for data about probe selection.

(2) Use a probe with a flexible shaft and a total length of 9.0 inches (229 mm) to get access to all of the inspection areas.

NOTE: A shorter length probe can be used for all of the inspection areas where the above probe is not necessary.

(3) The probes that follow were used to help prepare this procedure.

(a) MTF9003-90FX; NDT Engineering Corp.

(b) MP9003-50FX; NDT Engineering Corp.

D. Reference Standard

(1) Use reference standard 126 (or the equivalent) identified in Part 6, 51-00-00, Procedure 4, or Part 6, 51-00-00, Procedure 23.

3. Prepare for the Inspection

A. Identify all of the inspection areas. See Figure 1.

B. Clean the inspection area.

(1) Remove sealant as necessary.

(2) Remove paint only if it is loose.

4. Instrument Calibration

A. Refer to Part 6, 51-00-00, Procedure 4, for the calibration instructions if a meter display instrument is used or Part 6, 51-00-00, Procedure 23, if an impedance plane display instrument is used.

5. Inspection Procedure

A. Calibrate the instrument as specified in Paragraph 4.

B. Make a scan inspection of the inspection areas identified in Figure 1.

(1) For instruments with a meter display, refer to Part 6, 51-00-00, Procedure 4, paragraph. 6., for the inspection procedure.

(2) For instruments with an impedance plane display, refer to Part 6, 51-00-00, Procedure 23, paragraph. 6., for the inspection procedure.

6. Inspection Results

A. Refer to the applicable inspection procedure for data to help make an analysis of the inspection results.

BOEING PROPRIETARY - Copyright © Unpublished Work - See title page for details

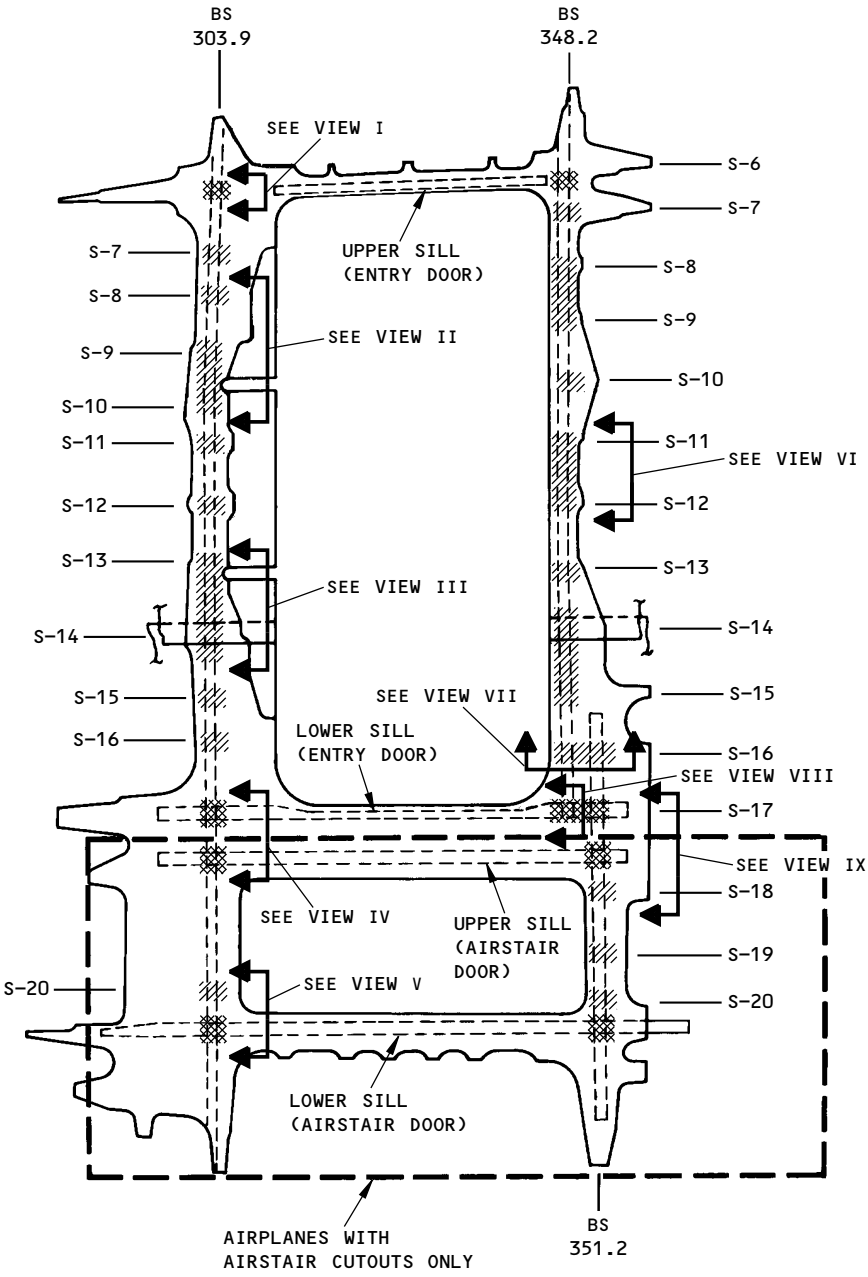

NOTES:

INSPECTION AREAS

OUTER CHORD INSPECTION AREA ONLY

OUTER AND INNER CHORD INSPECTION AREA AT THE FRAME-TO-SILL INTERSECTIONS.

- THERE ARE TWO CONFIGURATIONS OF FRAME INSTALLATIONS AT BS 303.9. THE VIEWS SHOWN IN SHEETS 2 THRU 9 SHOW ONE CONFIGURATION AND CAN BE DIFFERENT THAN YOUR AIRPLANE. THE INSPECTION AREAS SPECIFIED IN SHEETS 2 THRU 9 ARE FOR EACH CONFIGURATION.

2159375 S0000471922_V1

Forward Entry Door Cutout With and Without Airstairs
Figure 1 (Sheet 1 of 9)

BOEING PROPRIETARY - Copyright © Unpublished Work - See title page for details

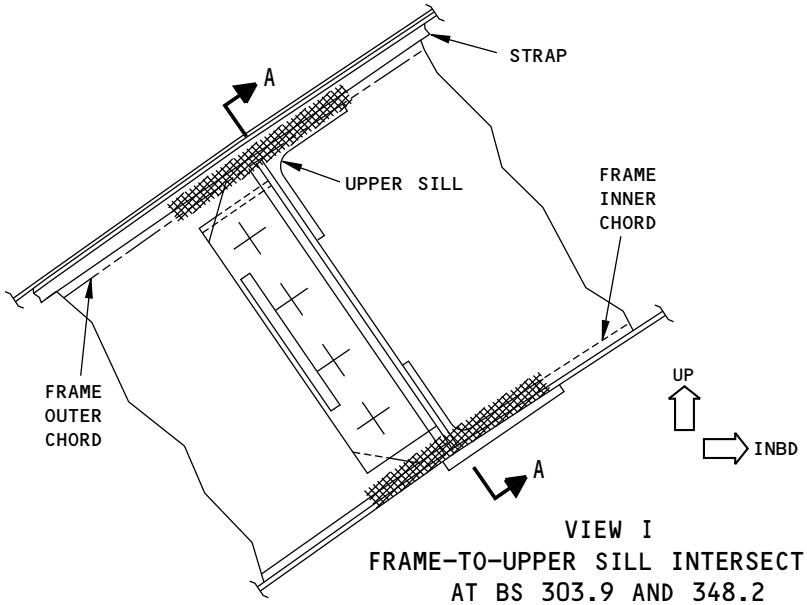

VIEW I
FRAME-TO-UPPER SILL INTERSECTION
AT BS 303.9 AND 348.2
REAR VIEW

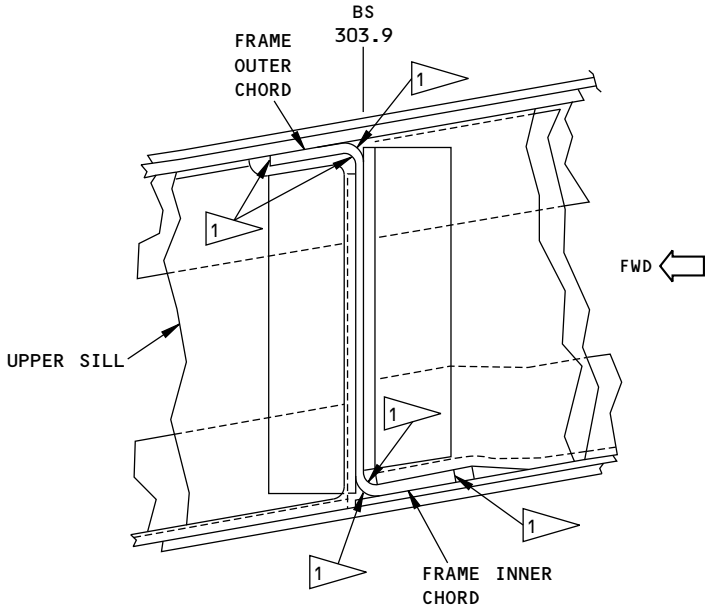

A-A
TYPICAL INSPECTION AREAS AT
BS 303.9 AND BS 348.2
(BS 303.9 SHOWN, BS 348.2 OPPOSITE)

NOTES:

1 PROBE POSITION TO THE INSPECTION AREA. MAKE A COMPLETE SCAN OF THE INSPECTION AREA, WHICH INCLUDES GAPS, SUCH AS UNDER AND AT THE ENDS OF STRINGERS.

2159377 S0000471923_V1

Forward Entry Door Cutout With and Without Airstairs
Figure 1 (Sheet 2 of 9)

BOEING PROPRIETARY - Copyright © Unpublished Work - See title page for details

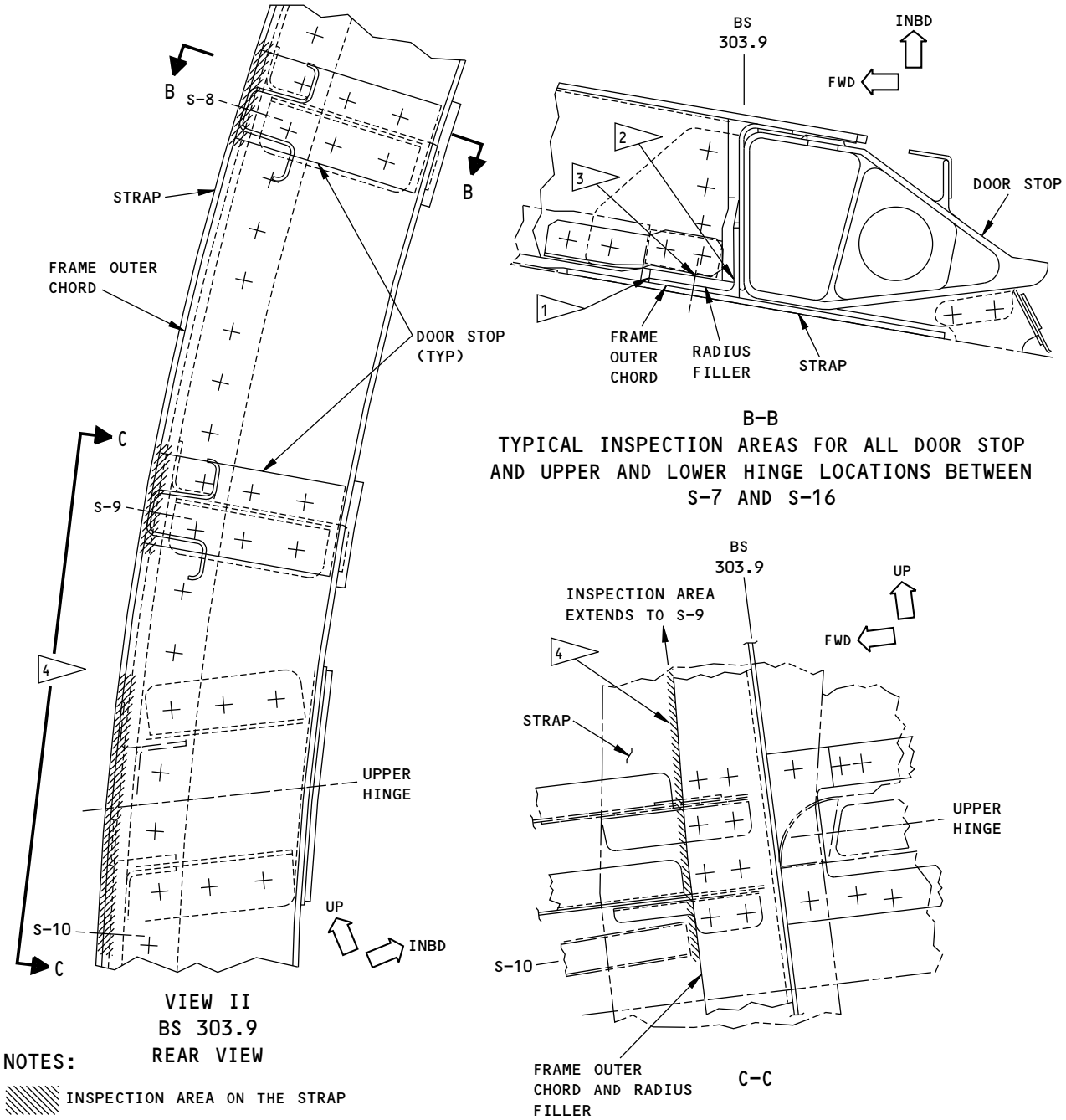

NOTES:

INSPECTION AREA ON THE STRAP

2 PROBE POSITION TO EXAMINE THE WEB OF THE FRAME. USE THE RADIUS FILLER AS THE PROBE GUIDE.

3 MAKE A SCAN INSPECTION ON THE RADIUS FILLER, ON THE FORWARD AND AFT SIDE OF THE FASTENER COLLAR.

4 EXAMINE THE STRAP FROM STRINGER S-9 TO STRINGER S-10.

2159378 S0000471924_V1

Forward Entry Door Cutout With and Without Airstairs
Figure 1 (Sheet 3 of 9)

BOEING PROPRIETARY - Copyright © Unpublished Work - See title page for details

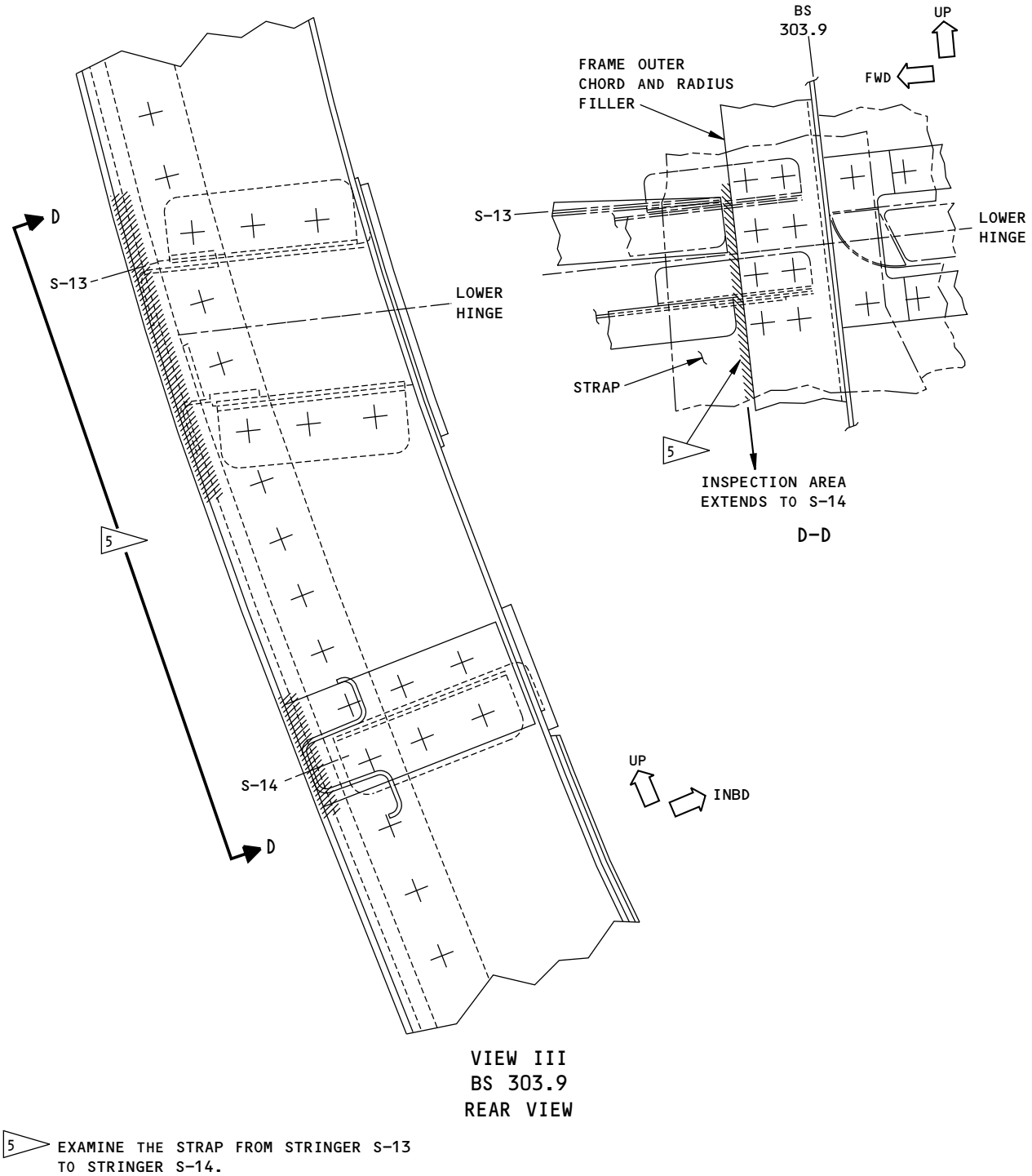

2159379 S0000471925_V1

Forward Entry Door Cutout With and Without Airstairs
Figure 1 (Sheet 4 of 9)

BOEING PROPRIETARY - Copyright © Unpublished Work - See title page for details

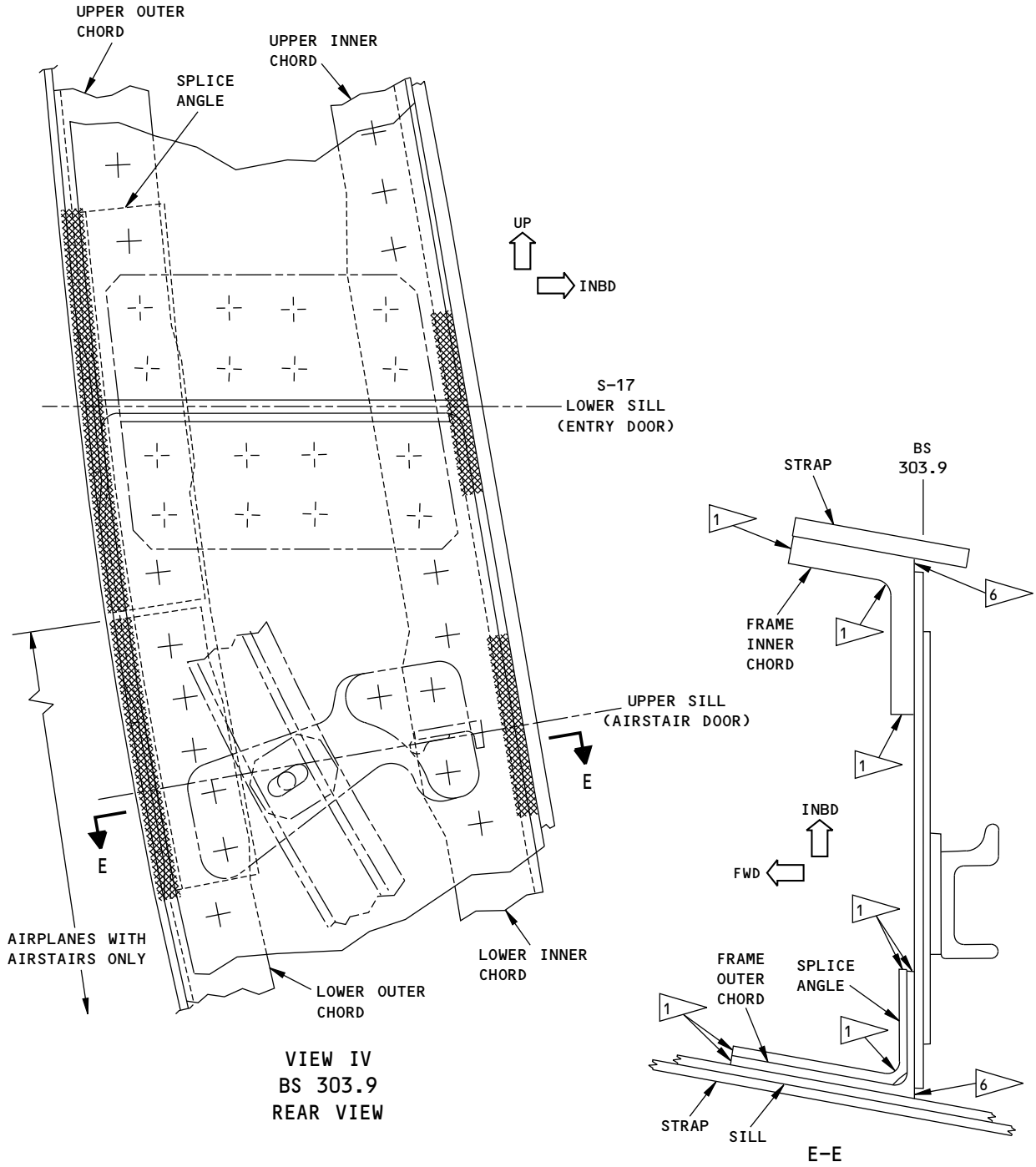

TYPICAL INSPECTION AREAS FOR THE LOWER SILL (ENTRY DOOR) AND THE UPPER SILL (AIRSTAIR DOOR)

2159381 S0000471926_V1

NOTES:

6 EXAMINE THIS AREA ONLY IF THERE IS GOOD ACCESS TO DO A SCAN INSPECTION.

Forward Entry Door Cutout With and Without Airstairs
Figure 1 (Sheet 5 of 9)

BOEING PROPRIETARY - Copyright © Unpublished Work - See title page for details

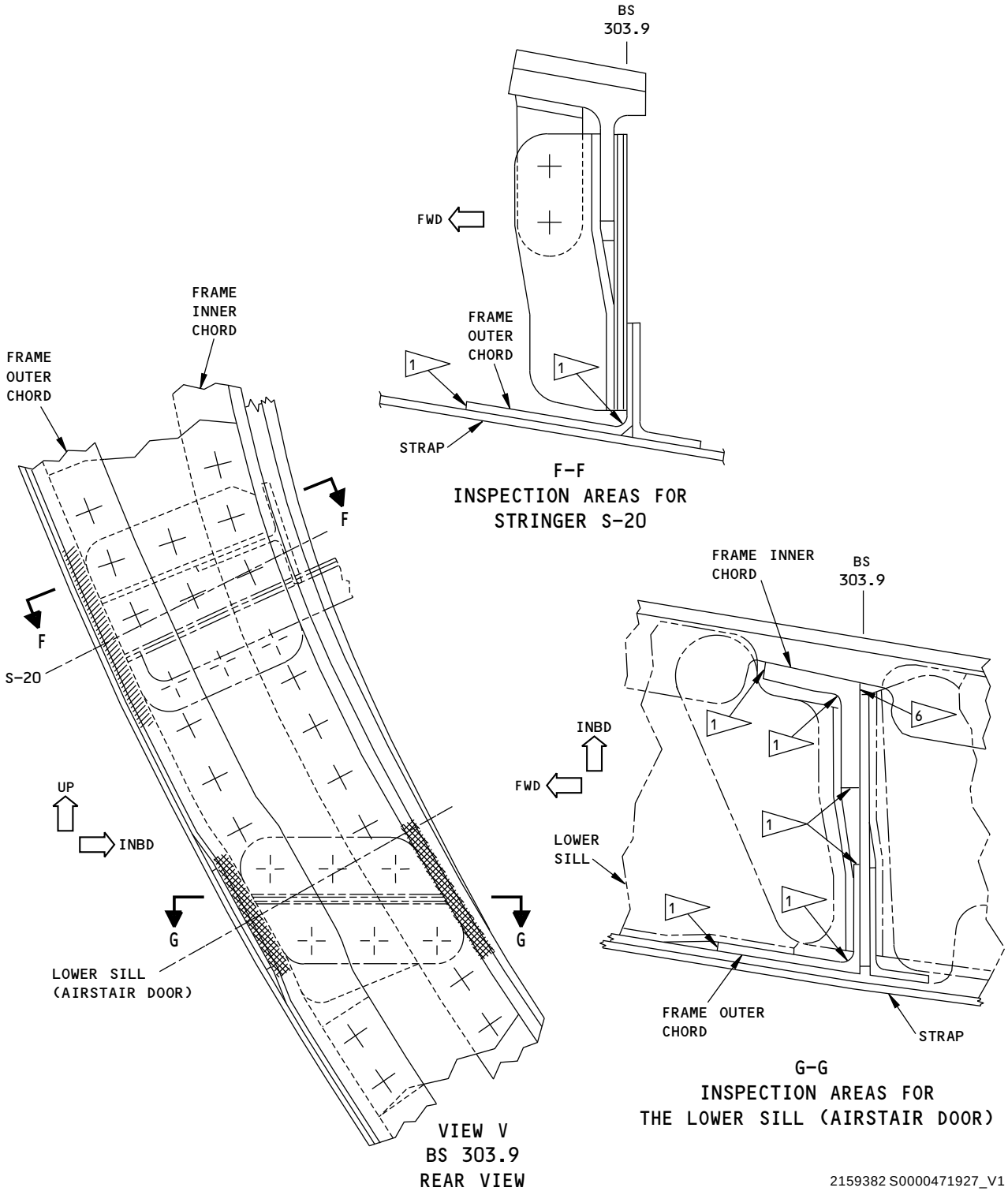

Forward Entry Door Cutout With and Without Airstairs
Figure 1 (Sheet 6 of 9)

BOEING PROPRIETARY - Copyright © Unpublished Work - See title page for details

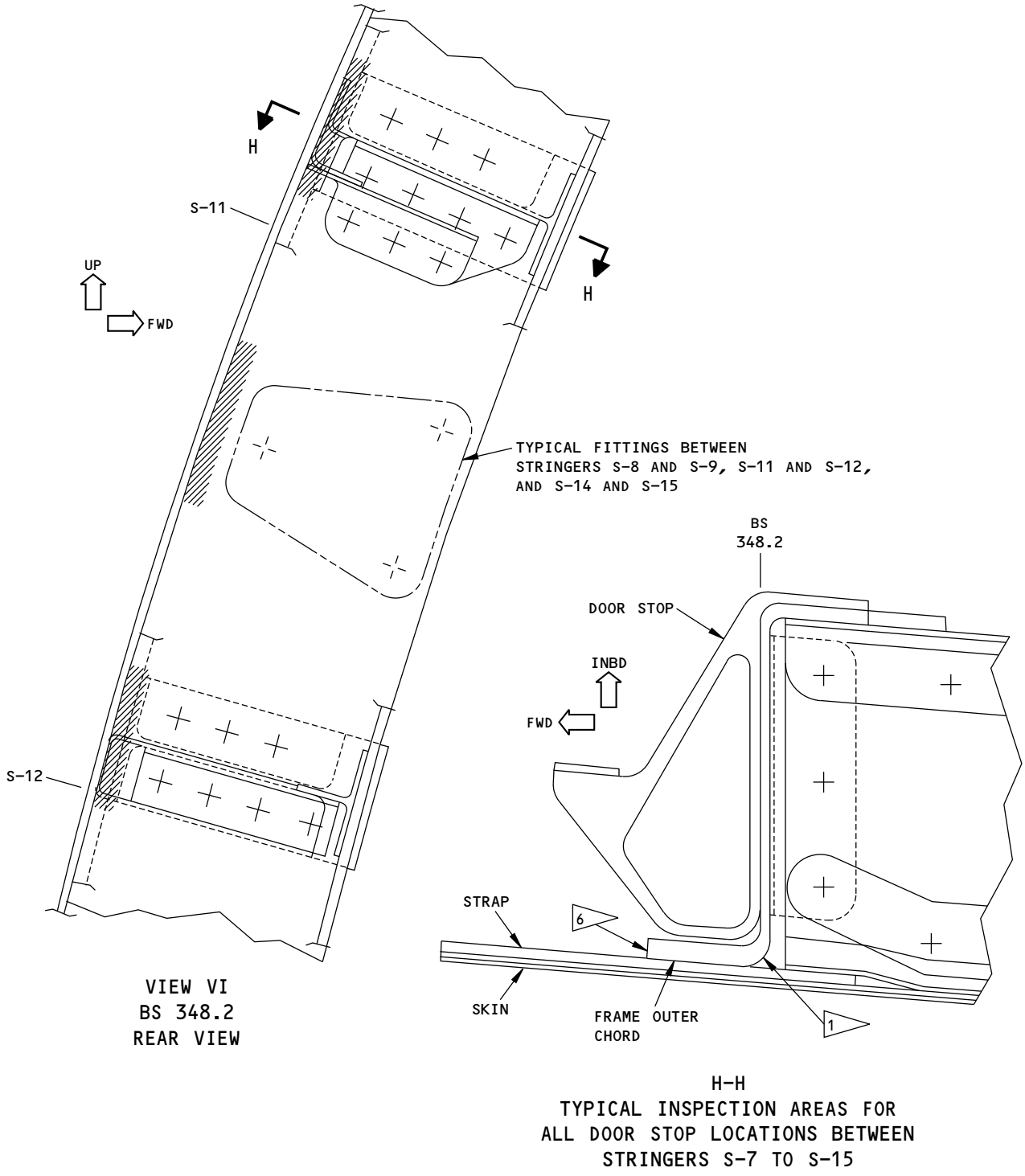

2159383 S0000471928_V1

Forward Entry Door Cutout With and Without Airstairs
Figure 1 (Sheet 7 of 9)

BOEING PROPRIETARY - Copyright © Unpublished Work - See title page for details

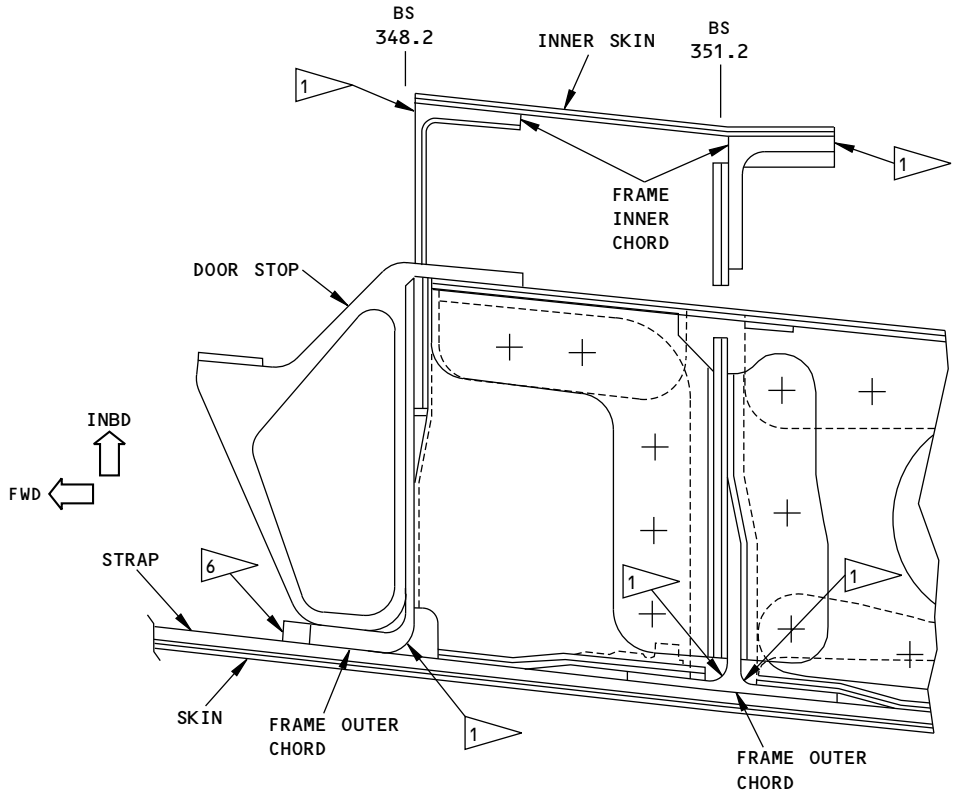

VIEW VII
INSPECTION AREAS AT STRINGER S-16
BS 348.2 AND BS 351.2

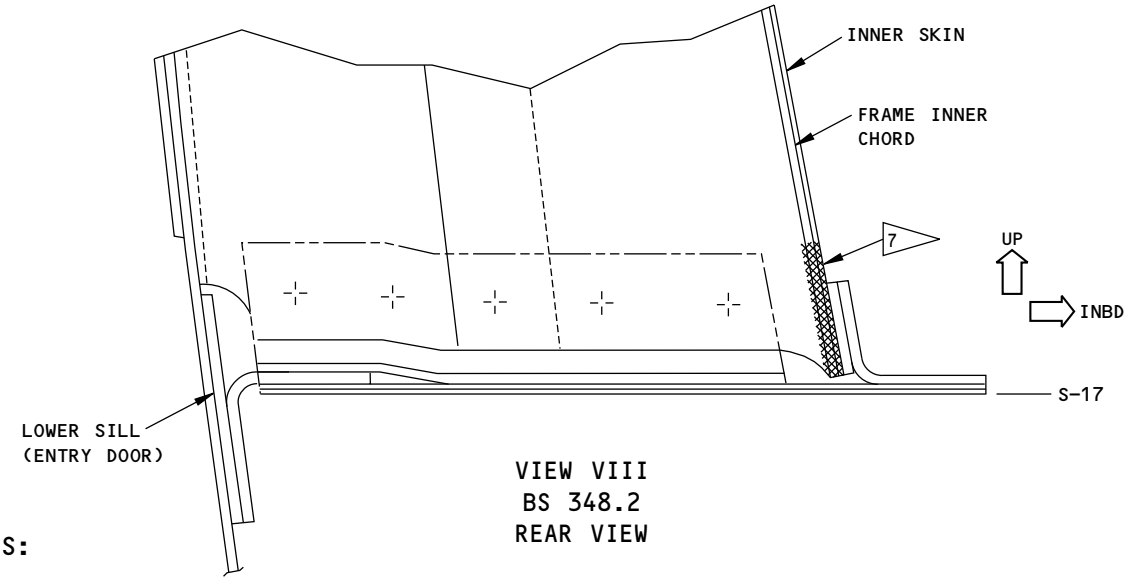

VIEW VIII
BS 348.2
REAR VIEW

NOTES:

7 MAKE A SCAN INSPECTION ALONG THE OUTER RADIUS OF THE INNER CHORD.

2159384 S0000471929_V1

Forward Entry Door Cutout With and Without Airstairs
Figure 1 (Sheet 8 of 9)

BOEING PROPRIETARY - Copyright © Unpublished Work - See title page for details

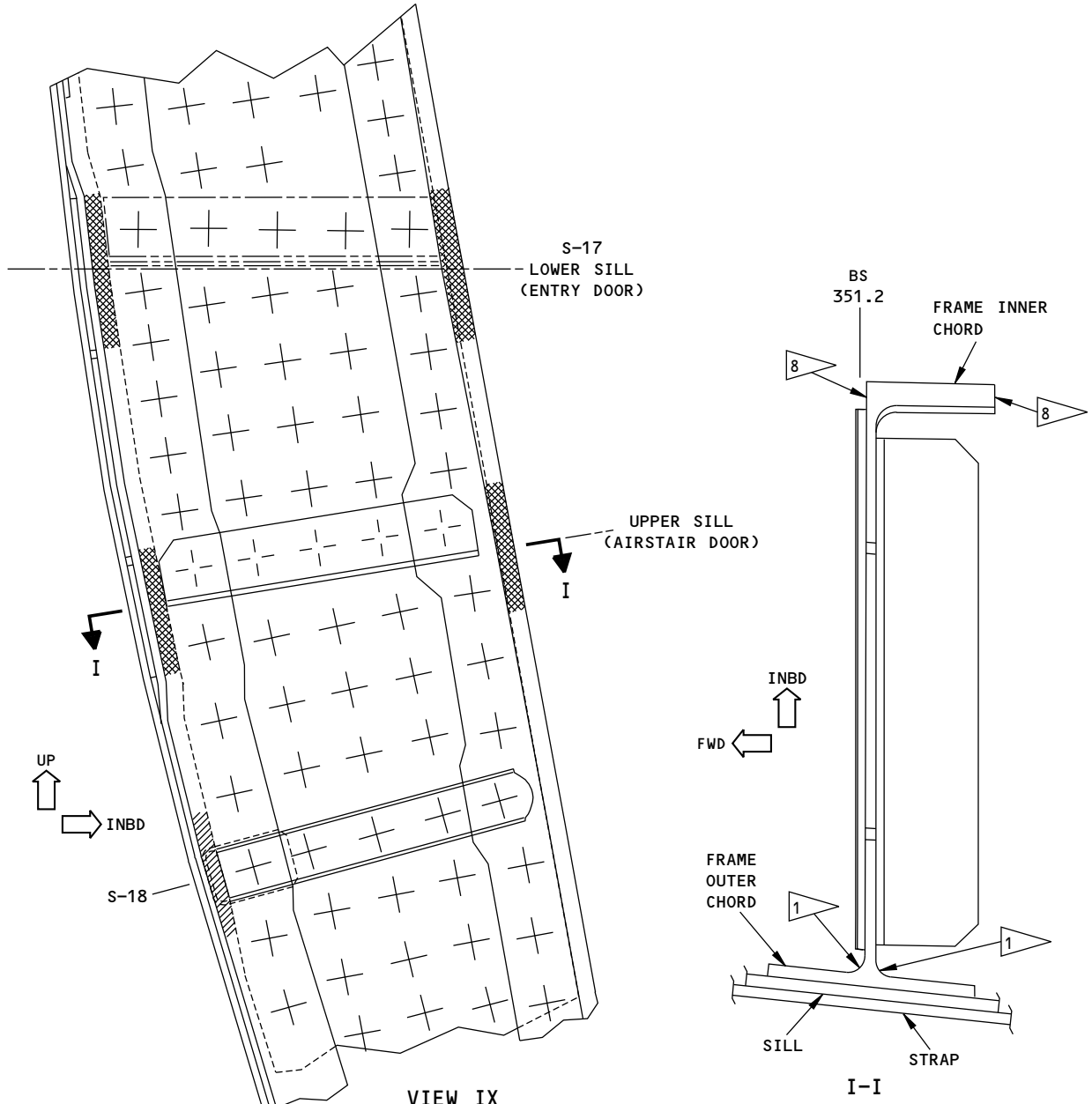

TYPICAL INSPECTION AREAS FOR THE LOCATIONS AT STRINGERS S-17, UPPER SILL (AIRSTAIR DOOR), S-18, S-19, S-20 AND THE LOWER SILL (AIRSTAIR DOOR)

8 MAKE A SCAN INSPECTION OF THE FRAME INNER CHORD AT THE FRAME-TO-SILL INTERSECTIONS AT STRINGER S-17 AND BETWEEN S-17 AND S-18 ONLY.

2159385 S0000471930_V1

Forward Entry Door Cutout With and Without Airstairs
Figure 1 (Sheet 9 of 9)

BOEING PROPRIETARY - Copyright © Unpublished Work - See title page for details

PART 6 - EDDY CURRENT

AFT GALLEY DOOR CUTOUT FRAME - BS 951.0 (LFEC)

1. Purpose

A. To detect cracks in frame outer chord horizontal flange of the aft galley door cutout at BS 951.0 using low frequency eddy current. See Figure 3.

B. 737 Supplemental Structural Inspection Document (D6-37089) Reference:

(1) Item: F-16

2. Equipment

A. Any eddy current instrument that will satisfy performance requirements of this procedure is suitable for this inspection. The following equipment was used in development of this procedure.

(1) Instrument - MIZ-10; Zetec Inc.

(2) Probe - This procedure uses one probe. Any probe of similar size satisfying the performance requirements of this procedure is acceptable. The following probe was used in development of this procedure:

(a) Ring Probe, Nortec P/N SPO-996 with 0.30-inch (0.76 cm) ID, 0.70-inch (1.78 cm) OD, shielded, usable at 500 Hz, available from Nortec Inc.

(3) Reference Standards - Manufacture Reference Standard 341 per Figure 1.

NOTE: Refer to Part 1, 51-01-00, for information on equipment manufacturers.

3. Prepare for the Inspection

A. Clean inspection surface and remove loose paint.

4. Instrument Calibration

A. Calibrate for fastener hole crack inspection using ring probe centered on fastener.

(1) Set frequency at 500 Hz.

(2) Visually center probe over unnotched reference standard hole. See Figure 2, Position 1, manipulate until minimum meter reading is obtained.

(3) Balance instrument per manufacturer's instructions.

(4) Adjust liftoff control per manufacturer's instructions to obtain same response when probe is on bare standard as with probe lifted off part by 0.006 inch (approximately thickness of two sheets of paper).

NOTE: Probe is visually centered over unnotched hole during liftoff calibration. Obtain minimum meter reading.

(5) Visually recenter probe over unnotched hole and adjust meter response to read 20% of full scale with meter position control.

NOTE: Manipulate probe (adjust balance as necessary) about visual center of fastener until 20% is minimum meter reading obtainable.

(6) Center probe over notched reference standard hole. See Figure 2, Position 2. Response should be upscale.

(7) Adjust instrument sensitivity to obtain a 50% of full scale meter response difference between notched and unnotched holes.

BOEING PROPRIETARY - Copyright © Unpublished Work - See title page for details

(8) Recheck null and liftoff. If readjustments are made, recheck sensitivity per Paragraph 4.A.(7).

(9) Cracks will be indicated by a higher meter response.

5. Inspection Procedure

A. Inspection of fastener holes for cracks using ring probe centered on fastener.

(1) Calibrate instrument per Paragraph 4.

(2) Use a minimum of three fasteners to establish airplane baseline response for an acceptable fastener.

(a) Select a representative fastener from this group and set its response to 20% of full meter scale.

NOTE: Do not change instrument sensitivity when establishing airplane baseline response.

(b) Refer back to this fastener periodically to ensure that instrument response is same as originally recorded.

NOTE: Changes in meter response may occur as a result of instrument drift or probe temperature change.

(3) Inspect each fastener by visually centering probe on fastener and manipulating to obtain minimum meter response.

6. Inspection Results

A. Fastener locations that give a response that is 30% of full meter scale higher than established baseline are potential crack indications and further investigation is required.

NOTE: The following conditions may cause meter reading changes similar to crack indications:

(1) A decrease in fastener spacing - Compare with similarly spaced fasteners on airplane.

(2) A fastener close to edge of skin or subsurface structure - Check drawings and compare with similar fasteners on airplane.

(3) Difference in conductivity between skin panels - Compare only inspection locations common to a skin panel.

(4) Differences in fastener material - If fastener material is different, complete recalibration is required using new fasteners of same material.

B. When investigating crack-like indications, compare meter response obtained at same location on another airplane of same configuration.

BOEING PROPRIETARY - Copyright © Unpublished Work - See title page for details

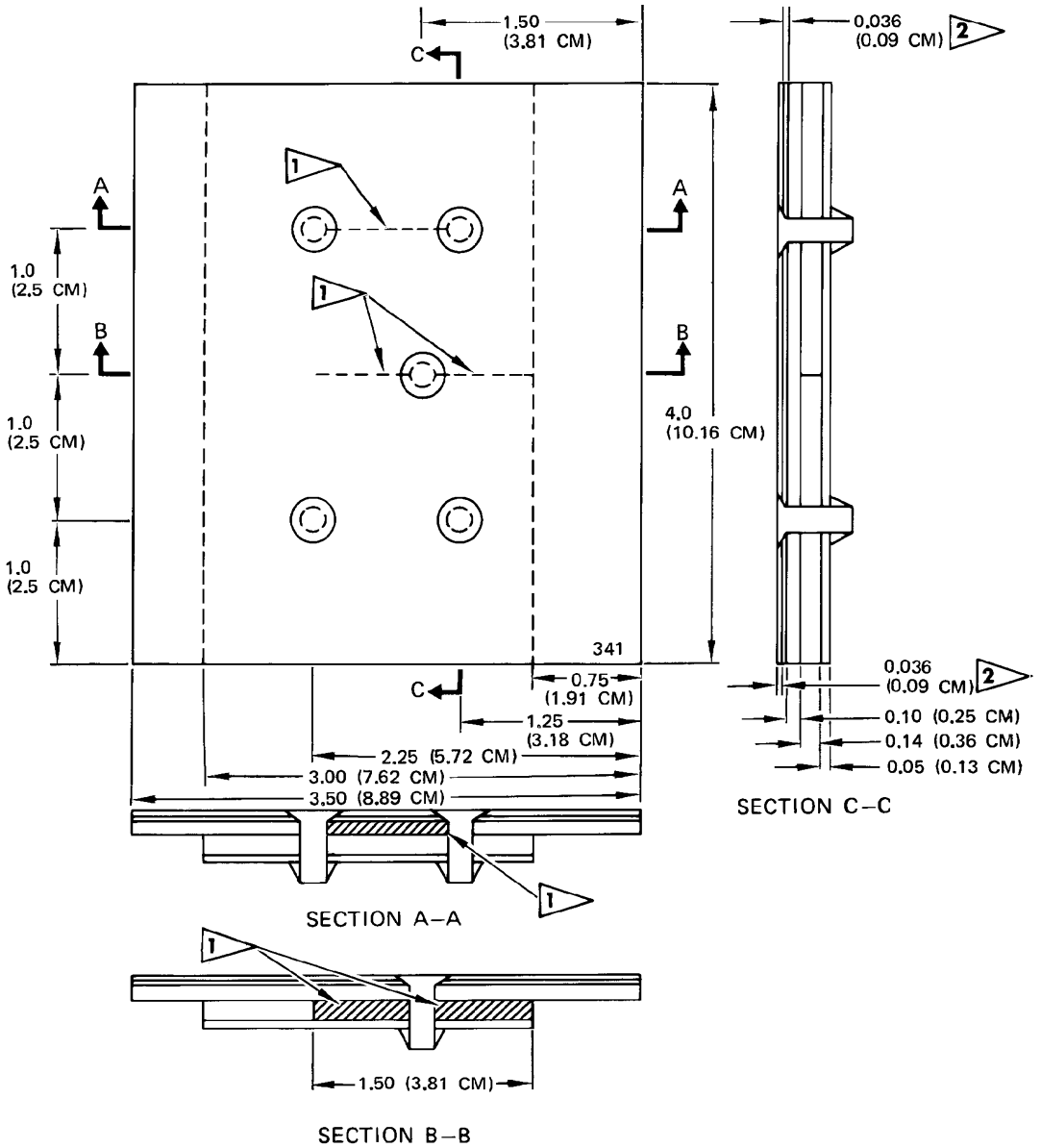

NOTES

- ALL DIMENSIONS ARE IN INCHES (CENTIMETERS IN PARENTHESES)
- TOLERANCE: X.X ± 0.05 (0.13 CM), X.XX ± 0.02 (0.05 CM), X.XXX ± 0.005 (0.013 CM)
- MATERIAL: 2024–T3 OR –T4 ALUMINUM
- FASTENERS: BACB30GY6A6 LOCKBOLT, BACC30K6 COLLAR (5 PLACES)
- ETCH OR STEEL STAMP WITH 341
- P/N 6412–242 AVAILABLE FROM IDEAL SPECIALTY CO.

  NOTE: REFERENCE STANDARD 341 USED ALSO BY PART 6, 53–10–15

1 JEWELER'S SAWCUT 0.030 (0.08 CM) MAX WIDTH

2 A SINGLE 0.071 (0.180 CM) MEMBER MAY BE SUBSTITUTED FOR THE TWO 0.036 (0.09 CM) LAYERS

2159387 S0000471932_V1

Reference Standard 341
Figure 1

BOEING PROPRIETARY - Copyright © Unpublished Work - See title page for details

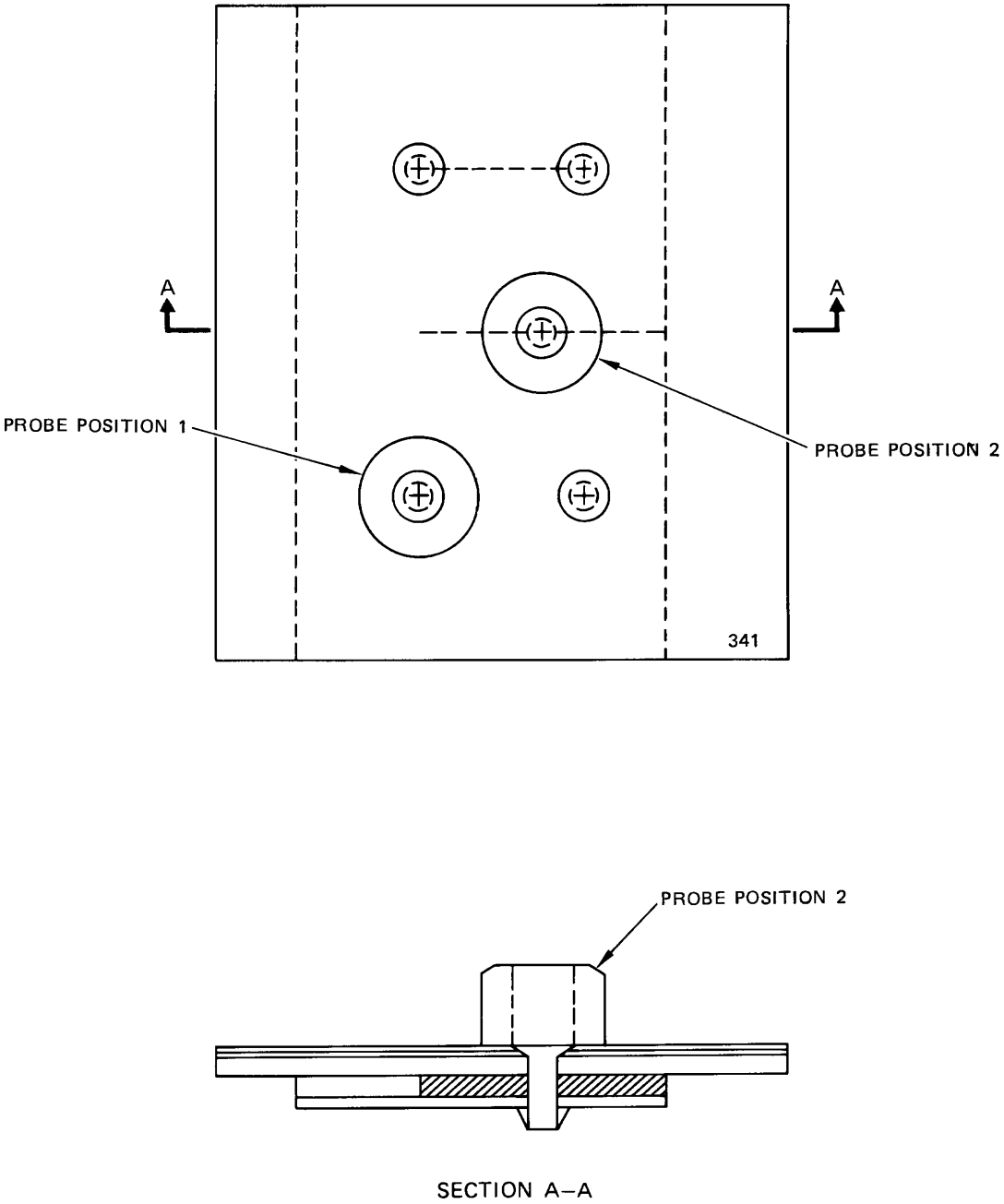

2159423 S0000471933_V1

Probe Calibration Positions on Reference Standard 341
Figure 2

BOEING PROPRIETARY - Copyright © Unpublished Work - See title page for details

2159425 S0000471934_V1

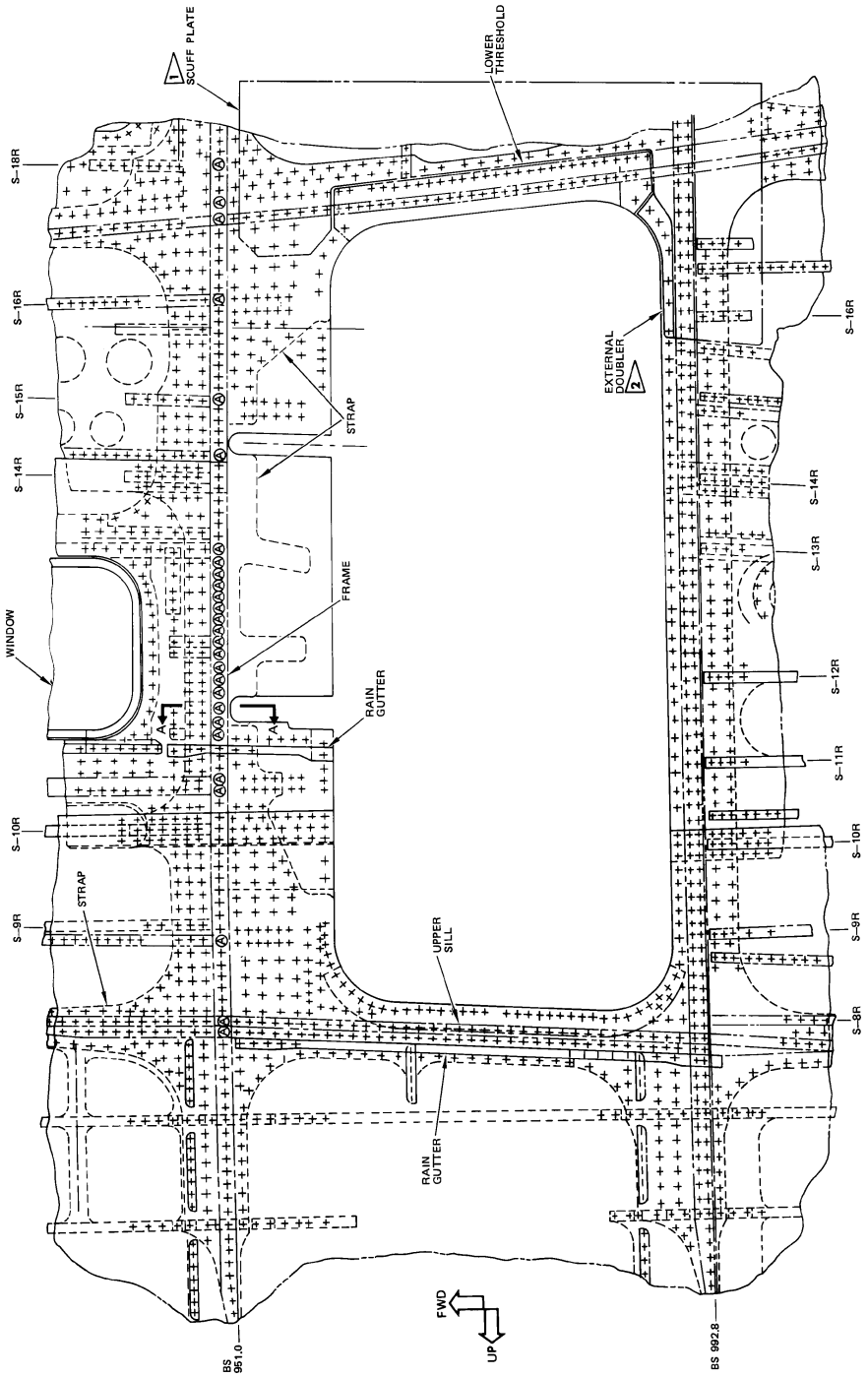

Aft Galley Door Cutout Frame - BS 951.0
Figure 3 (Sheet 1 of 2)

BOEING PROPRIETARY - Copyright © Unpublished Work - See title page for details

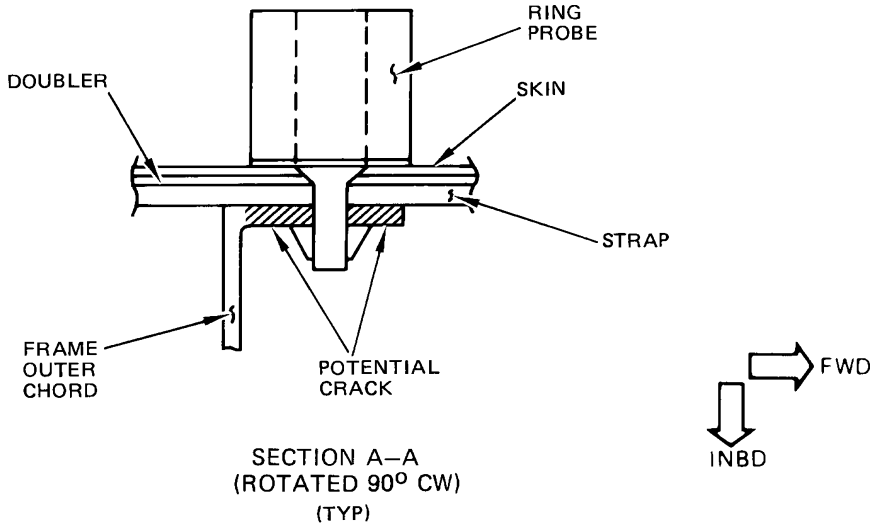

NOTES

(A) FASTENERS TO BE INSPECTED

1 SCUFF PLATE – PRESENT ON SOME AIRPLANES

2 EXTERNAL DOUBLER – PRESENT ON AIRPLANES FITTED WITH SCUFF PLATE

2159426 S0000471935_V1

Aft Galley Door Cutout Frame - BS 951.0
Figure 3 (Sheet 2 of 2)

BOEING PROPRIETARY - Copyright © Unpublished Work - See title page for details

PART 6 - EDDY CURRENT

AFT PRESSURE BULKHEAD - BS 1016 (LFEC)

1. Purpose

A. Use this subsurface inspection procedure to find cracks in the web of the aft pressure bulkhead at BS 1016. See Figure 1.

B. This procedure uses a shielded spot probe to look for cracks in the web that start at the fastener holes and extend in the direction along the fastener row.

C. The locations that follow are the inspection areas that examine the web for cracks that are 0.25 inch (6.4 mm) in length or longer:

(1) At web splices - This inspection is done through the first web layer (0.032 inch (0.81 mm)) to examine the second layer (0.032 inch (0.81 mm)). See Figure 2, flagnote 1.

(2) At web splices below the circumferential tear straps - This inspection is done through a tear strap (0.063 inch (1.6 mm)) or (0.040 inch (1.0 mm)) or (0.025 inch (0.64 mm)) to examine each (0.032 inch (0.81 mm)) layer of the web splice. See Figure 2, flagnote 2.

(3) At circumferential tear strap splices (0.040 inch (1.0 mm)) each or (0.025 inch (0.64 mm)) each - This inspection is done through two tear strap layers (0.040 inch (1.0 mm)) each or (0.025 inch (0.64 mm)) each to examine the web (0.032 inch (0.81 mm)). See Figure 2, flagnote 3.

(4) The web layer below the circumferential tear strap - This inspection is done through a tear strap (0.063 inch (1.6 mm)) or (0.040 inch (1.0 mm)) or (0.025 inch (0.64 mm)) to examine the web (0.032 inch (0.81 mm)). See Figure 2, flagnote 4.

(5) At a doubler above a web lap splice - This inspection is done through a doubler (0.040 inch (1.0 mm)) to examine each (0.032 inch (0.81 mm)) layer of the web splice. See Figure 2, flagnote 5.

(6) At the outer circumferential tear strap above a doubler - This inspection is done through the outer tear strap (0.040 inch (1.0 mm)) or (0.025 inch 6.4 mm)) above a doubler (0.040 inch (1.0 mm)) to examine the web (0.032 inch (0.81 mm)). See Figure 2, flagnote 6.

(7) At a doubler above the web - This inspection is done through a doubler (0.040 inch (1.0 mm)) to examine the web (0.032 inch (0.81 mm)). See Figure 2, flagnote 8.

D. The locations that follow are the inspection areas that examine the web for cracks that are 0.35 inch (8.9 mm) in length or longer:

(1) At circumferential tear strap splices (0.063 inch (1.6 mm)) each - This inspection is done through two tear strap layers (0.063 inch (1.6 mm)) each to examine the web (0.032 inch (0.81 mm)). See Figure 2, flagnote 3.

(2) At the pan that is between S-25L and S-25R - This inspection is done through the flange of the pan (0.080 inch (2.0 mm)) and a doubler (0.040 inch (1.0 mm)) to examine the web (0.032 inch (0.81 mm). See Figure 2, flagnote 9.

E. 737 Supplemental Structural Inspection Document (D6-37089) Reference:

(1) Item: F-30C

(2) Item: F-30E

(3) Item: F-30F

2. Equipment

A. General

BOEING PROPRIETARY - Copyright © Unpublished Work - See title page for details

(1) Use inspection equipment that can be calibrated on the reference standard as specified in Paragraph 4.

(2) Refer to Part 1, 51-01-00, for data about the equipment manufacturers.

B. Instrument

(1) Use an eddy current instrument that:

(a) Has an impedance plane or a meter display.

(b) Operates at a frequency between 1 and 12 kHz.

(2) The instruments specified below were used to help prepare this procedure.

(a) Miz-10A/B (Meter display); Zetec, Inc.

(b) Phasec 2200 (Impedance display); Hocking/Krautkramer

(c) Nortec 1000/2000 (Impedance display); Staveley, Inc.

(d) NDT 19e (Impedance display); Staveley, Inc.

C. Probes

(1) Use a spot probe with these properties:

NOTE: A reflection type probe is recommended.

(a) Two different diameter probes are necessary to do all the inspections identified in this procedure.

1) Use a probe with an end diameter of 0.25 inch (6.4 mm) to 0.40 inch (10.1 mm) to examine the locations identified in Paragraph 1.C.

2) Use a probe with an end diameter of 0.44 inch (11.2 mm) to 0.50 inch (12.7 mm) to examine the locations identified in Paragraph 1.D.

(b) Operates at a frequency between 1 and 12 kHz.

(c) Is straight or at a right angle.

(2) The probes specified below were used to help prepare this procedure.

NOTE: Probes different from those identified below can be used if they have the properties identified in Paragraph 2.C.(1).

(a) NEC-1087, 0.25 inch (6.4 mm) diameter; NDT Engineering

(b) RS053-1, 0.31 inch (7.9 mm) diameter; NDT Engineering

(c) SPO 5327, 0.31 inch (7.9 mm) diameter; Staveley, Inc.

(d) DP-375-SP, 0.38 inch (9.5 mm) diameter; Zetec, Inc.

(e) SPO-5328, 0.44 inch (11.2 mm) diameter; Staveley Inc.

(f) SPO-5329, 0.50 inch (12.7 mm) diameter; Staveley, Inc.

(g) RS1005-5/TF, 0.50 inch (12.7 mm) diameter; NDT Engineering

D. Reference Standards

(1) Use reference standard A389A --The top two layers of this standard are 0.040 inch (1.0 mm) thick. See Figure 3 for data about the reference standard.

(2) Use reference standard A389B --The top two layers of this standard are 0.025 inch (0.64 mm) thick. See Figure 3 for data about the reference standard.

BOEING PROPRIETARY - Copyright © Unpublished Work - See title page for details

(3) Use reference standard A389C --The top two layers of this standard are 0.063 inch (1.6 mm) thick. See Figure 3 for data about the reference standard.

3. Prepare for the Inspection

A. Go through door 3701L to get access to the aft side of the BS 1016 pressure bulkhead.

B. Remove loose material from the inspection surface. Do not remove the corrosion inhibiting compound.

4. Instrument Calibration

A. Identify the inspection area(s) to examine and use a probe diameter that is identified in Paragraph 2.C.(1)(a) for the applicable inspection area. See Figure 2 for the inspection areas.

B. See Figure 4 for the calibration specifications that identify:

(1) The inspection area.

(2) The reference standard to use for the inspection area.

(3) The location on the reference standard to calibrate the instrument.

(4) The instrument frequency to use.

C. Put the probe at probe position 1 of the applicable reference standard and location. See Figure 4 and Detail I in Figure 5.

D. Balance the instrument.

E. Set the lift-off as follows:

(1) If a meter display instrument is used: adjust the phase control so that the meter needle moves no more than 5 percent of full scale for probe-to-part distances of up to 0.006 inch (0.15 mm). This is the thickness of two sheets of paper (approximately).

(2) If an impedance plane display instrument is used: adjust the phase control so that the lift-off signal moves horizontally to the left as shown in Detail III in Figure 5.

F. Adjust the balance point to the position shown in Figure 5. See Detail II for the meter display and Detail III for the impedance plane display.

G. Adjust the instrument sensitivity as follows:

(1) Put the probe at probe position 2 on the reference standard, above the notch to get a maximum signal. See Detail I in Figure 5.

(2) If a meter display instrument is used:

(a) Adjust the instrument sensitivity to get a notch signal that is 70 percent of full scale (50 percent of full scale higher than the balance point). See Detail II in Figure 5.

(3) If an impedance plane display instrument is used:

(a) Adjust the instrument sensitivity to put the notch signal at 70 percent of full screen height (50 percent higher than the balance point). See Detail III in Figure 5.

NOTE: Use a higher vertical gain than the horizontal gain to give a more satisfactory vertical signal, approximately 3 to 1 vertical/horizontal gain ratio.

H. Move the probe around the fastener and in the direction of the reference standard's edge until a signal from the edge starts to show. Identify the distance the probe is from the edge; this will be the maximum scan distance around the fastener that you will use during the inspection.

BOEING PROPRIETARY - Copyright © Unpublished Work - See title page for details

5. **Inspection Procedure**

A. Examine the BS 1016 pressure bulkhead web as follows:

(1) Calibrate the instrument as specified in Paragraph 4.

(2) Put the probe on the inspection area and adjacent to the fastener. See Figure 2 that identifies the inspection areas.

(3) Move the probe around each fastener the maximum scan distance identified during calibration (see Paragraph 4.H.) and monitor the instrument display for crack signals.

6. **Inspection Results**

A. Inspection results for meter display instruments:

(1) An upscale needle movement that occurs during a short scan and is 40% or more of full scale (20% higher than the balance position) is a possible crack signal.

B. Inspection results for impedance plane display instruments:

(1) A vertical signal that occurs during a short scan and is 40% or more of full screen height (20% higher than the balance point) is a possible crack signal.

C. A slow upscale needle movement from the meter display instrument or a slow vertical indication from the impedance plane display instrument can be caused by separation between layers. This type of indication will occur during a longer scan than a crack indication. Compare the signals you get during the inspection to the signals you got from the reference standard during calibration.

D. Make sure an indication that occurs during the inspection is not caused by the edge of the surface layer or subsurface layer.

E. To make sure you have a crack, you can do a high frequency eddy current inspection as specified in Part 6, 51-00-00, Procedure 4, or Part 6, 51-00-00, Procedure 23, from the forward side of the BS 1016 Pressure Bulkhead at the location that caused the crack indication.

BOEING PROPRIETARY - Copyright © Unpublished Work - See title page for details

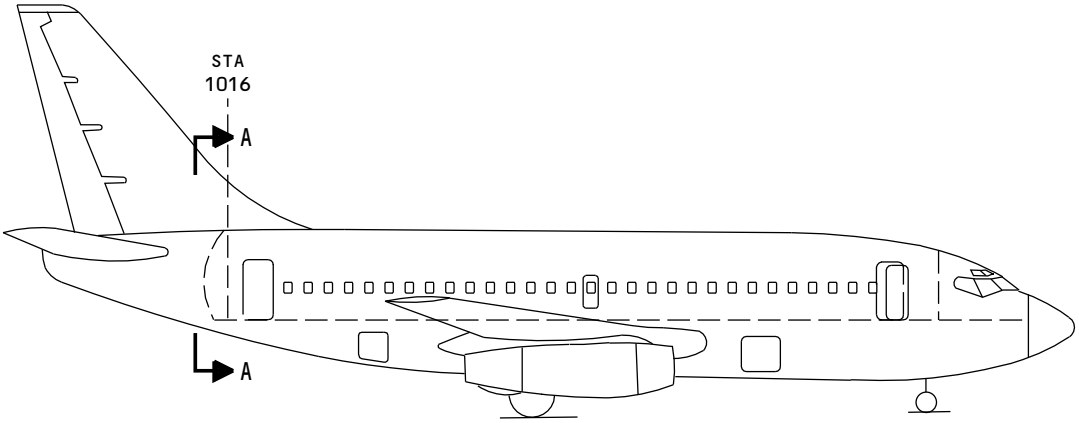

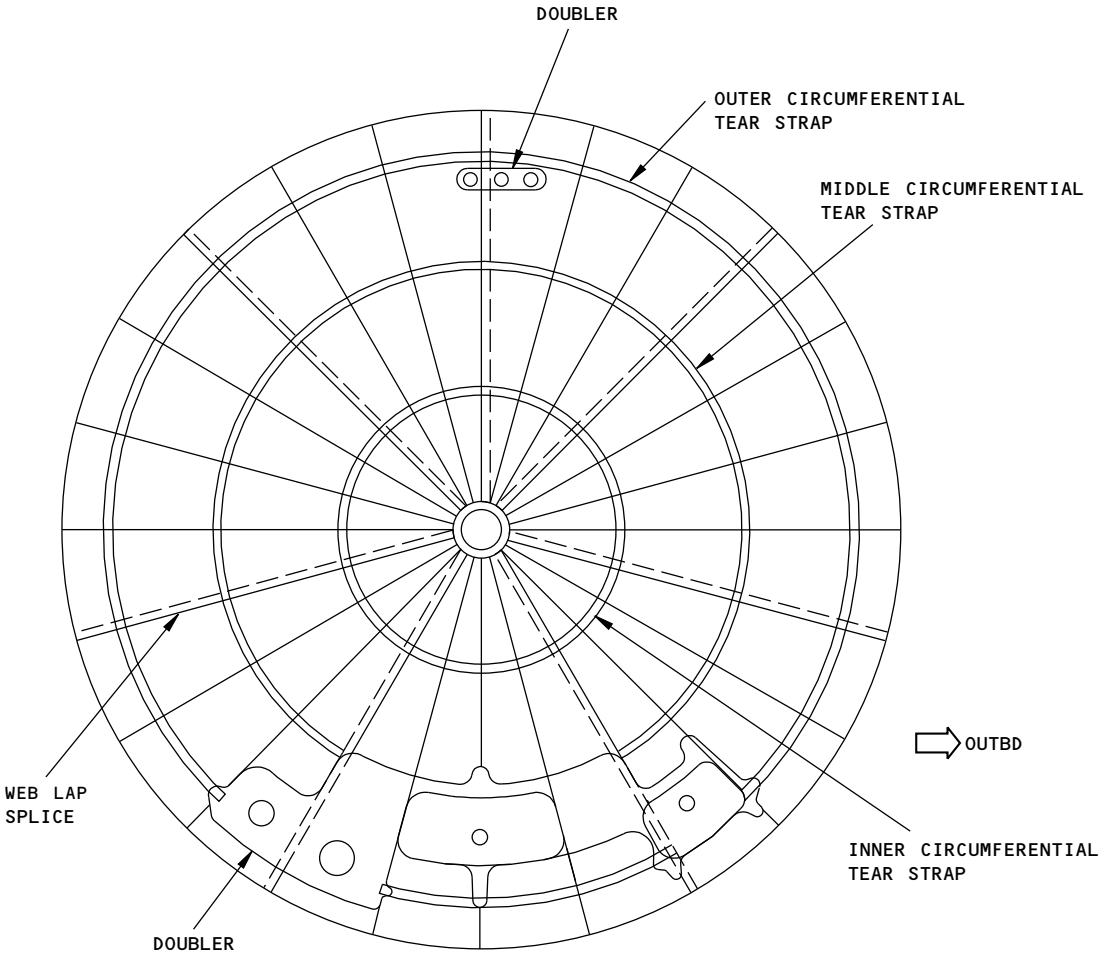

VIEW A-A
AFT SIDE OF BULKHEAD SHOWN

2159436 S0000471937_V1

Aft Pressure Bulkhead
Figure 1

BOEING PROPRIETARY - Copyright © Unpublished Work - See title page for details

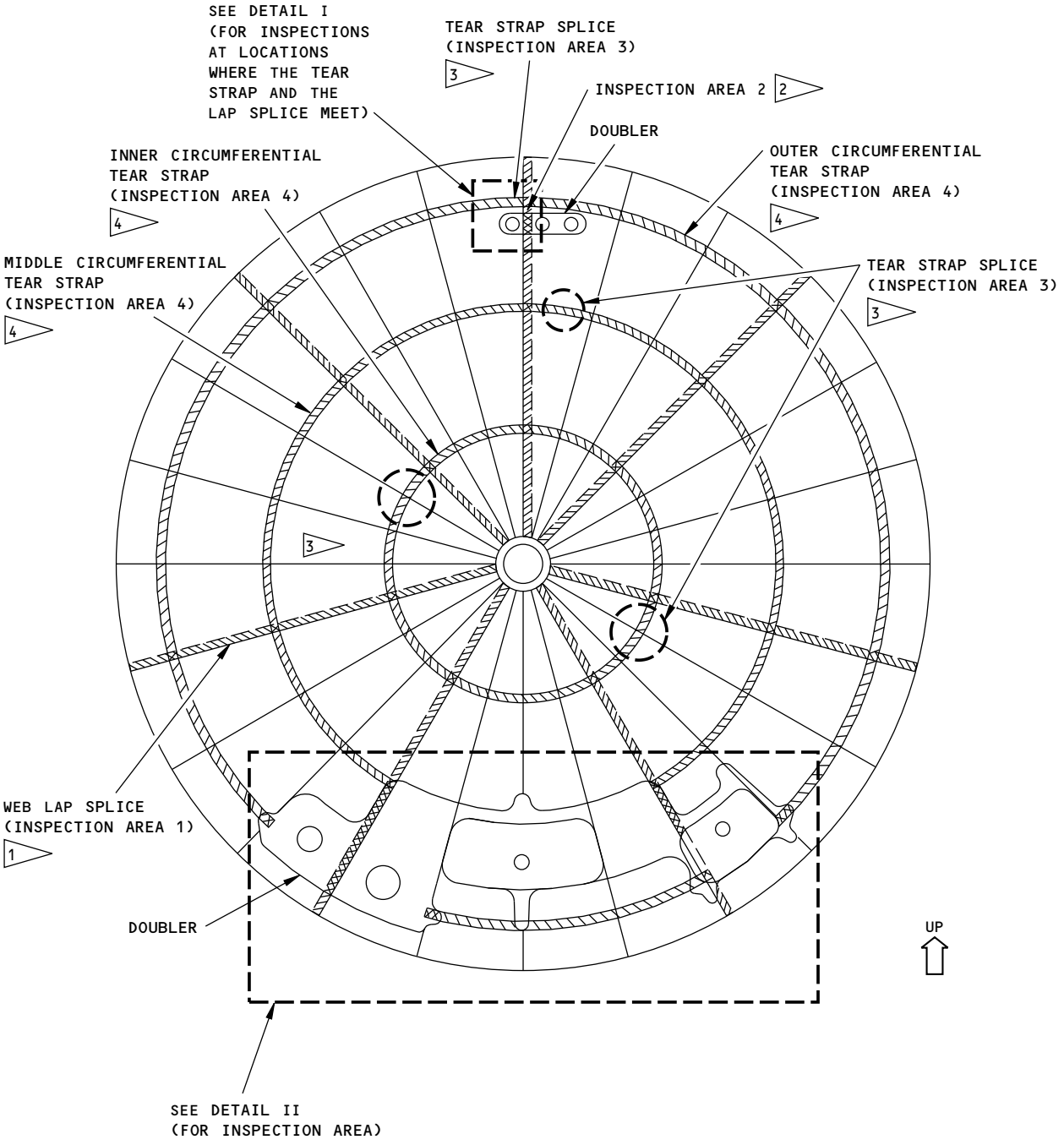

AFT SIDE OF BULKHEAD SHOWN

2159446 S0000471938_V2

Aft Pressure Bulkhead Inspection Areas
Figure 2 (Sheet 1 of 3)

BOEING PROPRIETARY - Copyright © Unpublished Work - See title page for details

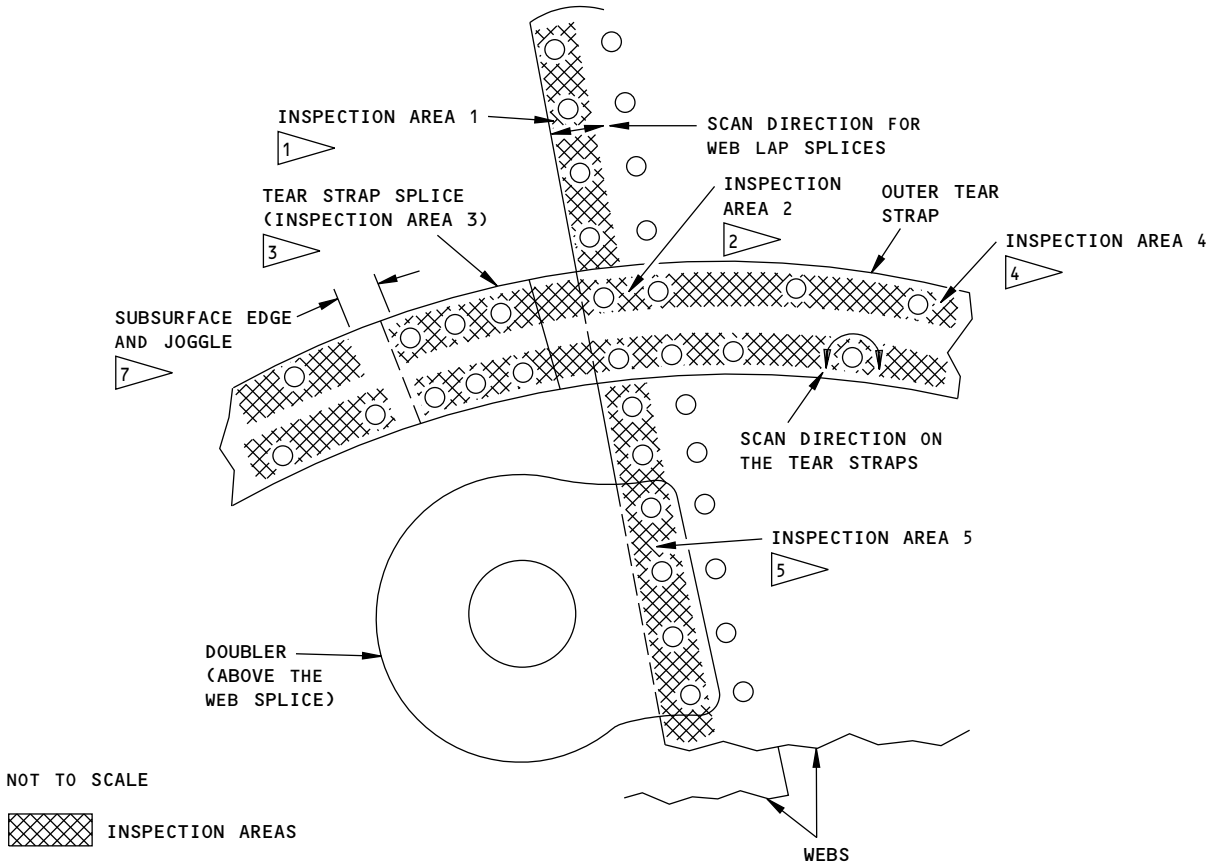

AFT SIDE OF BULKHEAD SHOWN
DETAIL I

NOTES

- ONLY DO THE INSPECTIONS AT THE OUTER CIRCUMFERENTIAL TEAR STRAP FOR SERVICE BULLETIN 737-53A1214.
- DO THE INSPECTIONS AT ALL OF THE CIRCUMFERENTIAL TEAR STRAPS AND WEB LAP SPLICES FOR SSID ITEM F-30.
- REFER TO FIGURE 4 FOR MORE DATA ON THE CALIBRATION AND INSPECTION.
- THE FLAGNOTES RELATE TO THE INSPECTION AREAS SHOWN ON FIGURE 4.

1 INSPECTION AREA 1 FOR THE WEB LAP SPLICES (ONE FASTENER ROW AS SHOWN FOR ALL LAP SPLICES)

2 INSPECTION AREA 2 FOR WEB LAP SPLICES THAT ARE BELOW THE CIRCUMFERENTIAL TEAR STRAPS (ALL LOCATIONS)

3 INSPECTION AREA 3 FOR WEBS BELOW THE CIRCUMFERENTIAL TEAR STRAP SPLICES (ALL LOCATIONS)

4 INSPECTION AREA 4 FOR WEBS BELOW THE CIRCUMFERENTIAL TEAR STRAPS (ALL LOCATIONS)

5 INSPECTION AREA 5 FOR WEB LAP SPLICES BELOW THE DOUBLERS (ALL LOCATIONS)

6 INSPECTION AREA 6 FOR WEB BELOW THE DOUBLER AND CIRCUMFERENTIAL TEAR STRAP (ALL LOCATIONS)

7 DO NOT DO AN INSPECTION NEAR THE SUBSURFACE EDGE OF THE TEAR STRAP SPLICES OR NEAR THE JOGGLES.

2159447 S0000471939_V3

Aft Pressure Bulkhead Inspection Areas
Figure 2 (Sheet 2 of 3)

BOEING PROPRIETARY - Copyright © Unpublished Work - See title page for details

2159451 S0000471940_V2

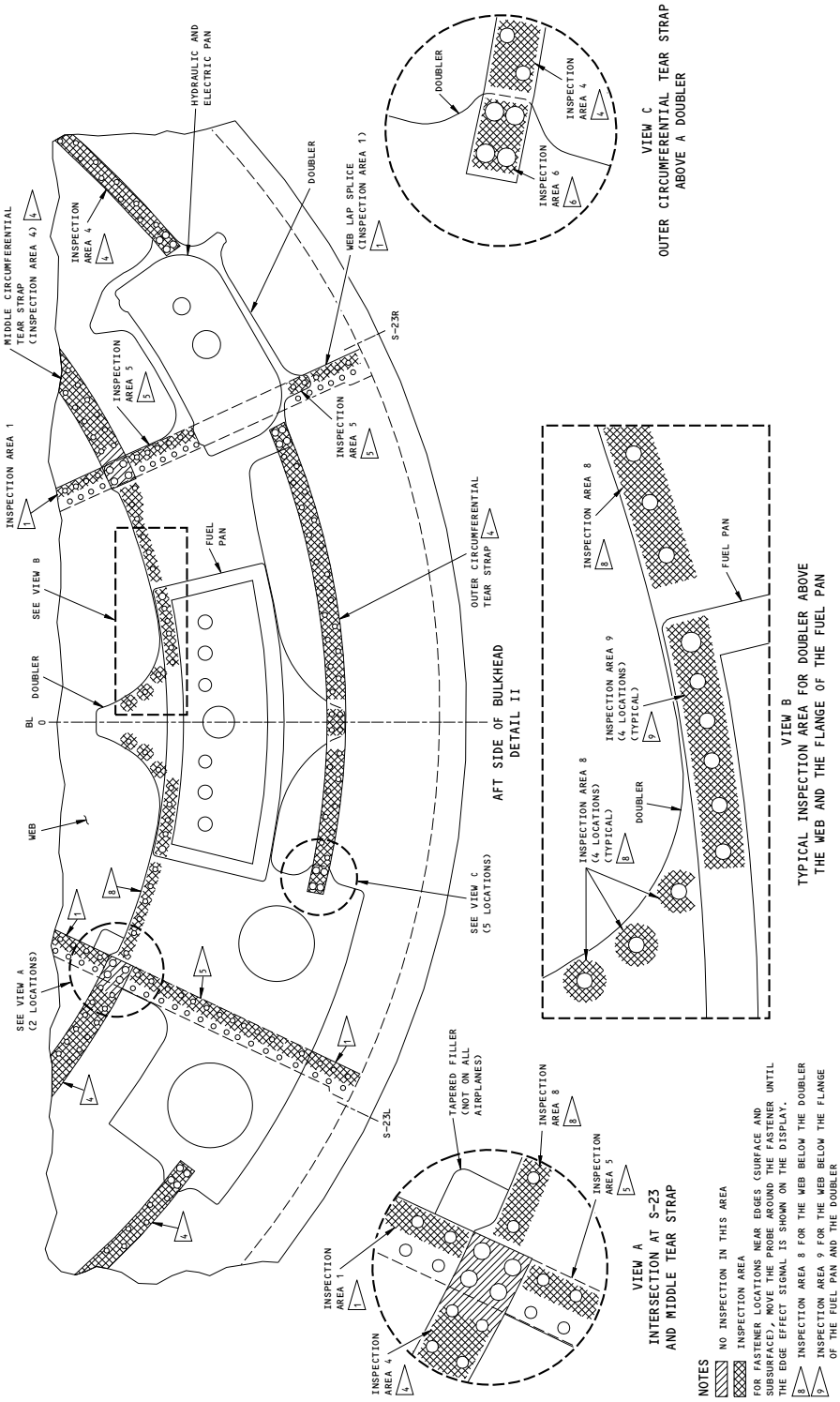

Aft Pressure Bulkhead Inspection Areas
Figure 2 (Sheet 3 of 3)

BOEING PROPRIETARY - Copyright © Unpublished Work - See title page for details

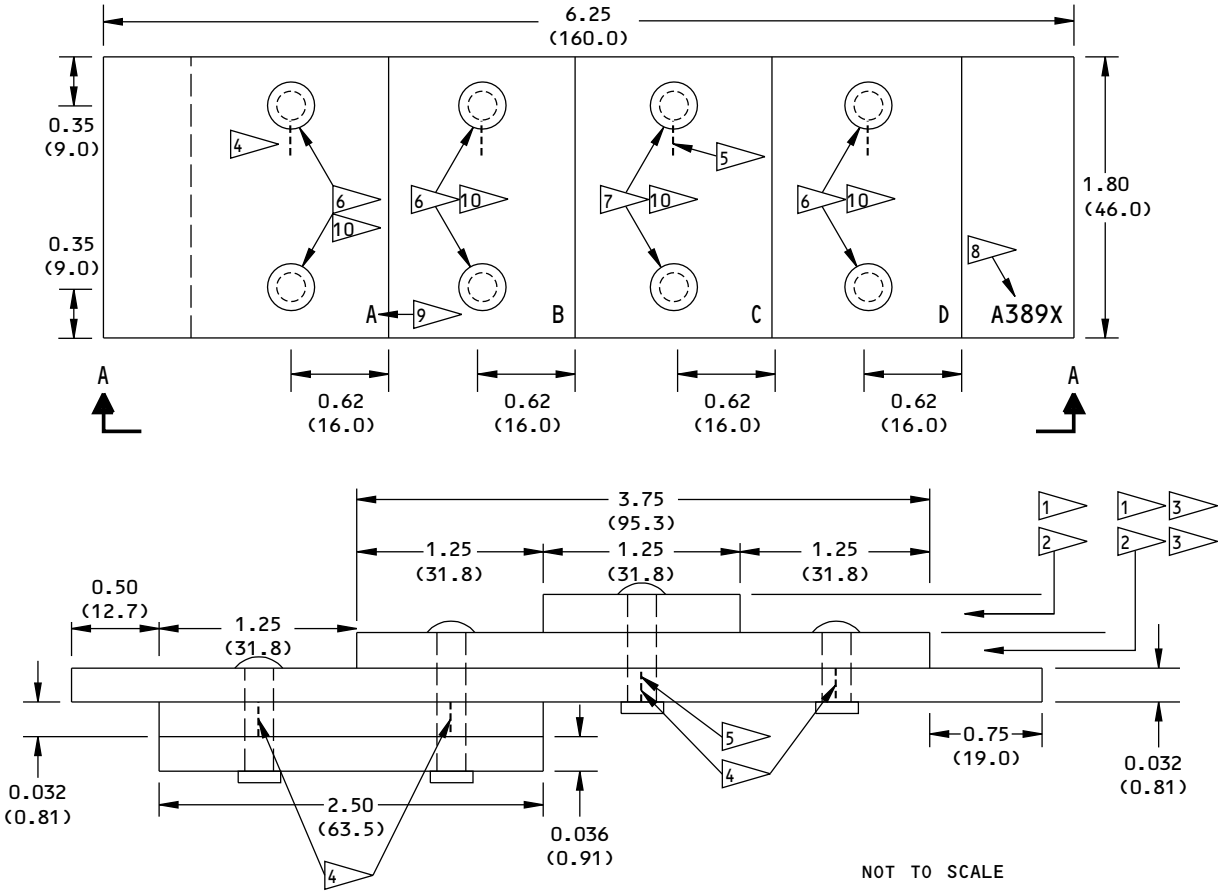

NOTES:

- ALL DIMENSIONS ARE IN INCHES (MILLIMETERS ARE IN PARENTHESES)
- DIMENSION TOLERANCE:
  X.XXX = ± 0.005 (0.12)
  X.XX = ± 0.025 (0.63)
  X.X = ± 0.050 (1.2)
- ALL SKIN MATERIAL IS 2024-T3 CLAD

1 STRAP THICKNESS 0.040 (1.01), THE TWO TOP LAYERS - FOR REFERENCE STANDARD A389A

2 STRAP THICKNESS 0.025 (0.63), THE TWO TOP LAYERS - FOR REFERENCE STANDARD A389B

3 STRAP THICKNESS 0.063 (1.60), THE TWO TOP LAYERS - FOR REFERENCE STANDARD A389C

4 EDM NOTCH OR SAWCUT - WIDTH: 0.025 (0.63) MAXIMUM, LENGTH: 0.250 (6.3) ± 0.025 (0.63), DEPTH: THROUGH THICKNESS. PUT NOTCHES AT FOUR LOCATIONS AS SHOWN.

5 EDM NOTCH OR SAWCUT - WIDTH: 0.025 (0.63) MAXIMUM; LENGTH: 0.350 (8.9) ± 0.035 (0.89); DEPTH: THROUGH THICKNESS. THIS NOTCH IS FOR REFERENCE STANDARD A389C, LOCATION "C" ONLY.

6 BACR15BB5B * RIVETS, 6 LOCATIONS

7 BACR15BB6B * RIVETS, 2 LOCATIONS

8 MAKE A MARK OR STEEL STAMP "A389A" (FLAG NOTE 1), OR "A389B" (FLAG NOTE 2), OR "A389C" (FLAGNOTE 3). PUT A LETTER "A" IN FRONT OF THE REFERENCE STANDARD NUMBER TO SHOW THAT IT HAS ALODINED RIVETS. SEE FLAGNOTE 10.

9 MAKE A MARK OR STEEL STAMP "A", "B", "C", "D" AT FOUR LOCATIONS AS SHOWN ABOVE.

10 THESE RIVETS MUST HAVE A CONVERSION COATED (ALODINED) FINISH. TO MAKE SURE THE FINISH IS ALODINE, REFER TO PART 1, 51-06-01. INSTALL THE RIVETS AS SPECIFIED IN PART 1, 51-01-04.

2159456 S0000471941_V1

Reference Standard A389A, A389B and A389C for the Aft Pressure Bulkhead
Figure 3

BOEING PROPRIETARY - Copyright © Unpublished Work - See title page for details

CALIBRATION SPECIFICATIONS AND INSPECTION AREAS AT THE OUTER CIRCUMFERENTIAL TEAR STRAPS ON APPLICABLE AIRPLANES: 737-100 THRU -500 BASIC NUMBERS: P0013-P2499, P2513-P4399, P4401-P4799, P4801-P5499, P5501-P8499, P8501-P8999; 737-600 THRU -900: ALL AIRPLANES

INSPECTION AREA	REFERENCE STANDARD	LOCATION ON REF STANDARD	FREQUENCY
2	A389B	B	4 KHZ
3	A389B	C	5 KHZ
4	A389B	D	12 KHZ
6	A389B	B	4 KHZ

CALIBRATION SPECIFICATIONS AND INSPECTION AREAS AT THE OUTER CIRCUMFERENTIAL TEAR STRAPS ON APPLICABLE AIRPLANES: 737-100/-200 BASIC NUMBERS: P0001-P0012, P2501-P2512:

INSPECTION AREA	REFERENCE STANDARD	LOCATION ON REF STANDARD	FREQUENCY
2	A389A	B	3 KHZ
3	A389A	C	3 KHZ
4	A389A	D	9 KHZ
6	A389A	B	3 KHZ

CALIBRATION SPECIFICATIONS AND INSPECTION AREAS AT THE WEB SPLICES AWAY FROM THE CIRCUMFERENTIAL TEAR STRAPS: 737-100 THRU -500 BASIC NUMBERS: ALL AIRPLANES; 737-600 THRU -900: ALL AIRPLANES

INSPECTION AREA	REFERENCE STANDARD	LOCATION ON REF STANDARD	FREQUENCY
1	A389A OR A389B	A	11 KHZ
5	A389A	B	4 KHZ

CALIBRATION SPECIFICATIONS AND INSPECTION AREAS AT THE MIDDLE AND INNER CIRCUMFERENTIAL TEAR STRAPS: 737-100 THRU -400 BASIC NUMBERS: P0001-P2499, P2501-P4399, P4401-P4799, P4801-P5499, P5501-P6030, P7801-P7836, P8151-P8157, P8501-P8999; 737-600 THRU -900: ALL AIRPLANES

INSPECTION AREA	REFERENCE STANDARD	LOCATION ON REF STANDARD	FREQUENCY
2	A389A	B	3 KHZ
3	A389A	C	3 KHZ
4	A389A	D	12 KHZ

CALIBRATION SPECIFICATIONS AND INSPECTION AREAS AT THE MIDDLE AND INNER CIRCUMFERENTIAL TEAR STRAPS: 737-300 THRU -500 BASIC NUMBERS: P6031-P6999, P7001-P7799, P7837-P8150, P8158-P8499; 737-600 THRU -900: ALL AIRPLANES

INSPECTION AREA	REFERENCE STANDARD	LOCATION ON REF STANDARD	FREQUENCY
2	A389C	B	2 KHZ
3	A389C	C	1 KHZ
4	A389C	D	5 KHZ

CALIBRATION SPECIFICATIONS AND INSPECTION AREAS AT THE DOUBLERS THAT ARE BETWEEN S-23L AND S-23R AND BETWEEN THE MIDDLE AND OUTER CIRCUMFERENTIAL TEAR STRAPS (SEE DETAIL II): 737-100 THRU -500 BASIC NUMBERS: ALL AIRPLANES; 737-600 THRU -900: ALL AIRPLANES

INSPECTION AREA	REFERENCE STANDARD	LOCATION ON REF STANDARD	FREQUENCY
8	A389A	D	3 KHZ
9	A389C	C	1 KHZ

NOTE

REFER TO FIGURE 2 FOR THE INSPECTION AREAS SHOWN ABOVE.

2159463 S0000471942_V1

Calibration Specifications
Figure 4

BOEING PROPRIETARY - Copyright © Unpublished Work - See title page for details

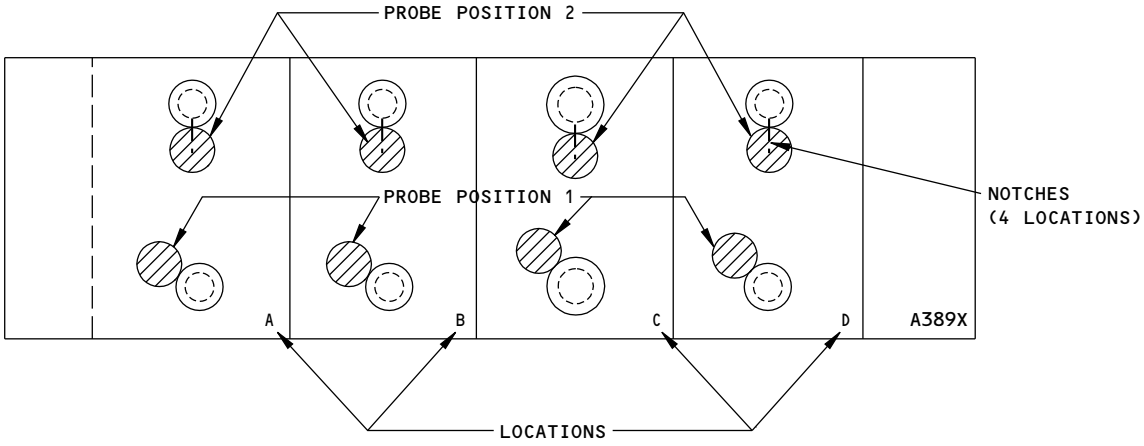

PROBE POSITIONS ON THE REFERENCE STANDARD
DETAIL I

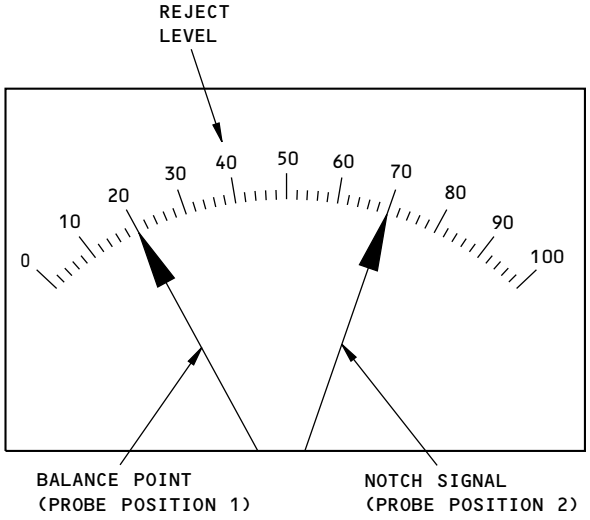

METER DISPLAY
DETAIL II

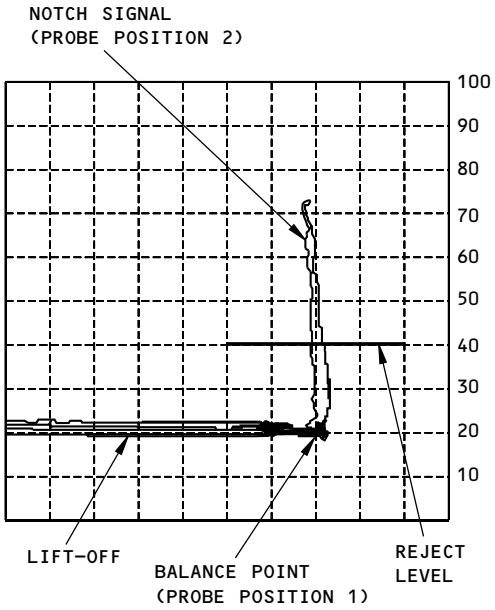

IMPEDANCE PLANE DISPLAY
DETAIL III

NOTES

- REFER TO FIGURE 4 FOR THE APPLICABLE REFERENCE STANDARD AND THE LOCATION ON THE REFERENCE STANDARD.
- MAKE SURE THE CALIBRATION IS DONE ON THE REFERENCE STANDARD LOCATION THAT AGREES WITH THE INSPECTION LOCATION.

2159466 S0000471943_V2

Instrument Calibration
Figure 5

BOEING PROPRIETARY - Copyright © Unpublished Work - See title page for details

PART 6 - EDDY CURRENT

FORWARD GALLEY DOOR CUTOUT

1. **Purpose**

   A. To detect cracks emanating from fastener holes in the skin doubler at the upper corners of the forward galley door cutout.

   B. This inspection is done to fastener holes with the fasteners removed. Service Bulletin 737-53-1116 removes the fasteners.

   C. Part 6, 51-00-00, Procedure 16 can be used as an alternative procedure.

   D. Service Bulletin Reference: 737-53-1116

2. **Equipment**

   A. Any eddy current instrument and probe combination which will satisfy the requirements of this procedure is suitable for this inspection. The following equipment was used in development of this procedure.

      (1) Instrument -- MIZ 10B; Zetec, Inc.

      (2) Probe -- Low frequency spot probe with active coil diameter of approximately 0.275 inch, capable of operating at 3 kHz.

         (a) LS203-1; NDT Product Engineering

         (b) VM111; VM Products

      (3) Reference Standard -- Manufacture reference standard 368 per Figure 1.

      NOTE: Refer to Part 1, 51-01-00, for information on equipment manufacturers.

3. **Prepare for the Inspection**

   A. Clean inspection surface, if necessary, and identify inspection fastener locations by referring to Figure 3.

4. **Instrument Calibration**

   A. Calibrate to inspect for cracks in the skin doubler.

      (1) Attach probe to instrument and set instrument frequency at 3 kHz.

      (2) Place the probe on the reference standard adjacent to the fastener hole in the unnotched area (position 1, Figure 2).

      (3) Adjust lift-off control to obtain the same response when probe is on bare standard as when probe is lifted off the part by 0.006 inch. (Approximately the thickness of two sheets of paper.)

      (4) Keep the probe at position 1 and use the meter position control to adjust the meter response to 20 percent of full scale.

      (5) Place the probe over the notched portion of the reference standard (position 2). Meter response should be upscale.

      NOTE: Manipulate probe to obtain maximum meter deflection.

      (6) Adjust instrument sensitivity to obtain a 40 percent of full scale meter response difference between the notched and unnotched locations.

BOEING PROPRIETARY - Copyright © Unpublished Work - See title page for details

(7) Reposition the probe at position 1 and recheck balance and lift-off. If readjustments are made, recheck sensitivity per Paragraph 4.A.(6) and Paragraph 4.A.(7).

5. Inspection Procedure

A. Inspect for cracks in the skin doubler.

(1) Calibrate the instrument per Paragraph 4. and Figure 2.

(2) Note inspection fastener locations per Figure 3.

(3) Put the probe adjacent to the fastener hole and do a scan around the circumference of the fastener hole (see Detail A in Figure 3).

(4) Use several inspection locations to establish the airplane baseline response, and if necessary, reset meter response to 20 percent of full scale.

(5) Do an inspection of the hole for each fastener location shown in Detail A in Figure 3.

6. Inspection Results

A. Inspection locations that give a response which is 20 percent higher than the established baseline response is a potential crack indication and further investigation is required.

BOEING PROPRIETARY - Copyright © Unpublished Work - See title page for details

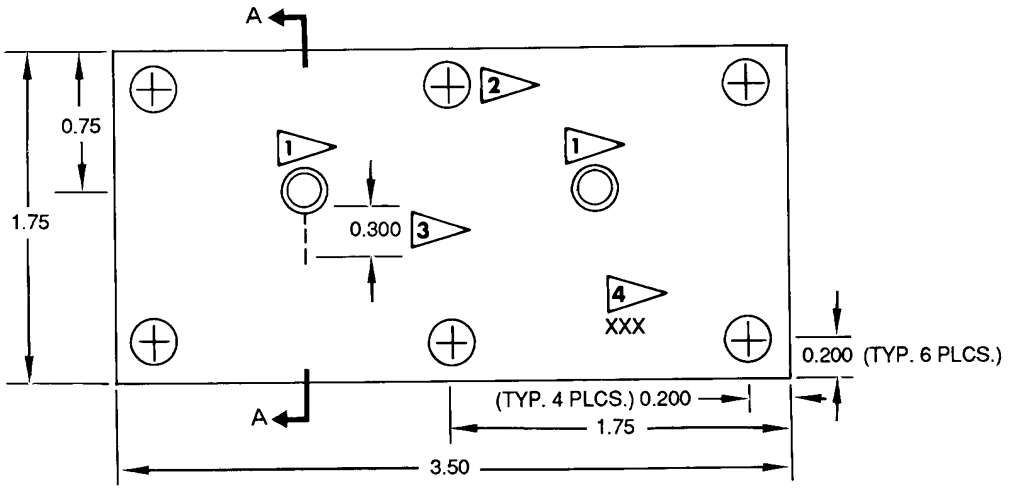

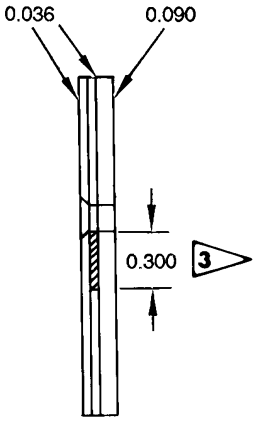

SECTION A–A

X.XX ± 0.010
X.XXX ± 0.005

ALL DIMENSIONS IN INCHES

MATERIAL: 2024-T3,-T4 CLAD

1. 3/16 INCH DIAMETER HOLE. COUNTERSINK THE TOP PLATE 100 DEGREES.
2. INSTALL ANY 5/32 INCH RIVETS IN 6 LOCATIONS AS REQUIRED TO PREVENT BUCKLING OF MATERIAL. ALL SHEETS MUST BE TIGHT AND SECURE.
3. MAXIMUM 0.030 INCH WIDE JEWELER SAW OR EDM NOTCH 0.300 INCH LONG MEASURED FROM BORE OF HOLE.
4. ETCH OR STEEL STAMP 368 IN THIS LOCATION

2159477 S0000471945_V1

Reference Standard 368
Figure 1

BOEING PROPRIETARY - Copyright © Unpublished Work - See title page for details

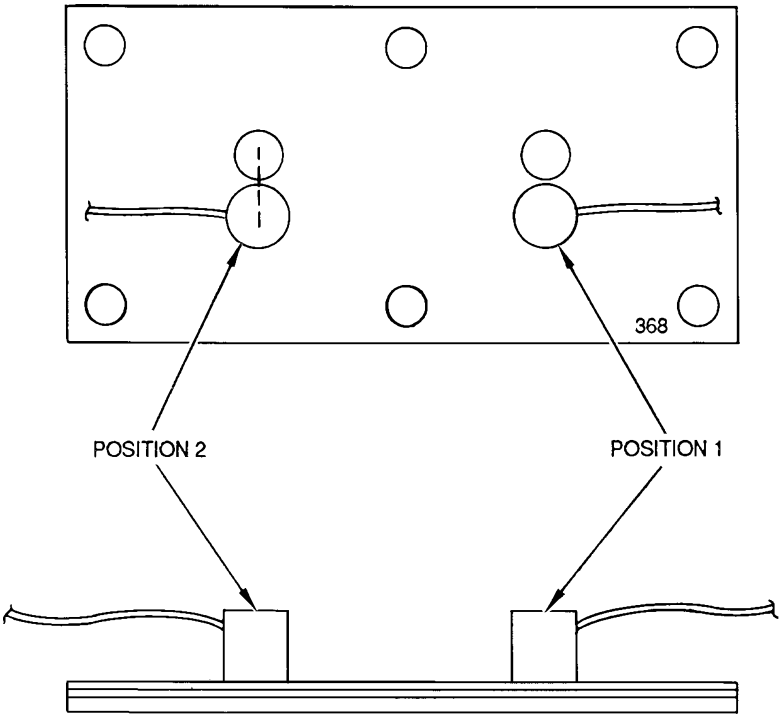

2159479 S0000471946_V1

Probe Calibration Positions
Figure 2

BOEING PROPRIETARY - Copyright © Unpublished Work - See title page for details

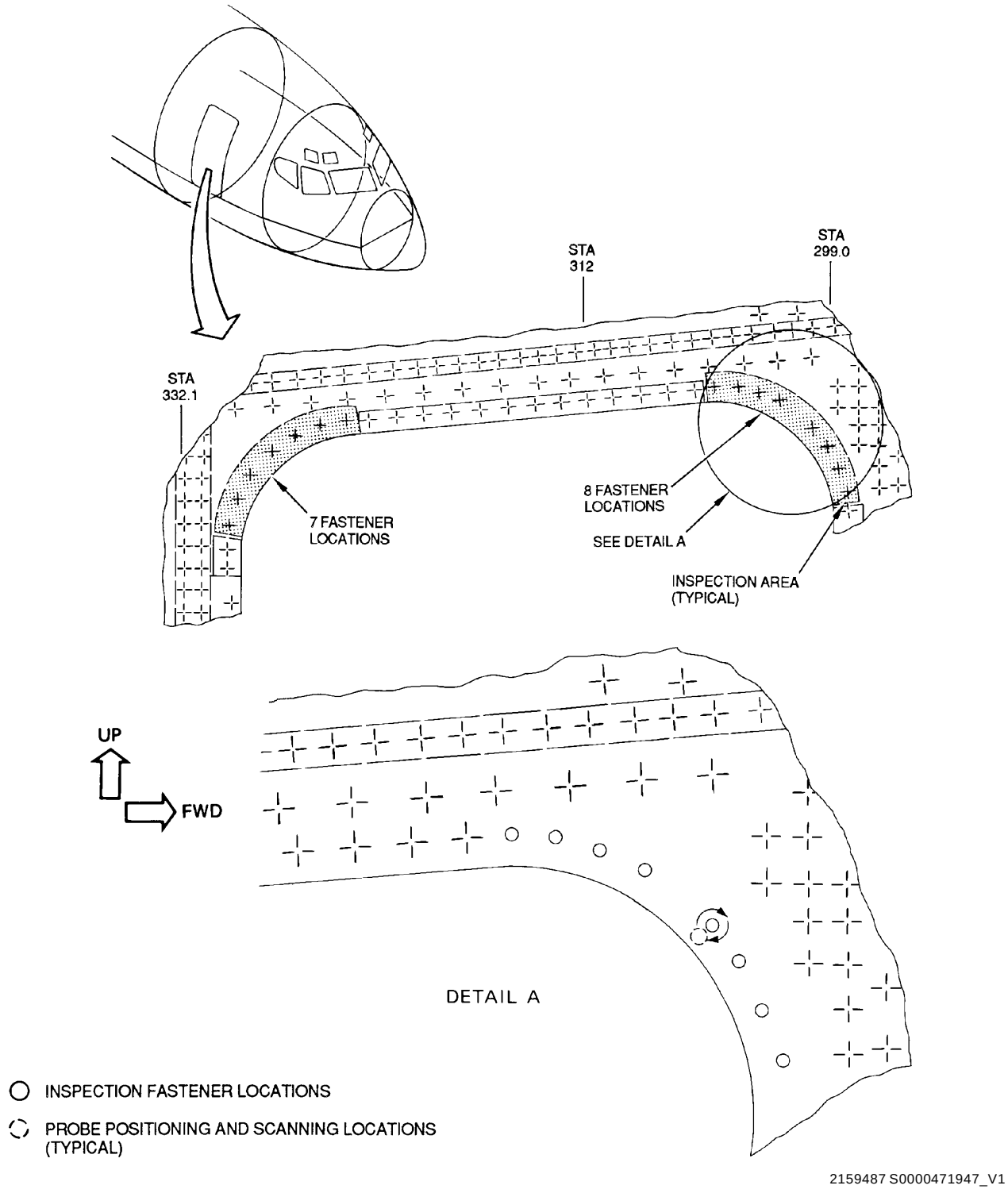

Forward Galley Door Cutout
Figure 3

BOEING PROPRIETARY - Copyright © Unpublished Work - See title page for details

PART 6 - EDDY CURRENT

MAIN DECK CARGO DOOR CUTOUT (HFEC)

1. Purpose

A. To use a high-frequency eddy-current surface inspection to find cracks in the 737 main-deck cargo-door cutout of the inner and outer chords of the sills and the frames.

B. To use a high-frequency eddy-current bolthole method of inspection to find cracks in the tear strap at the upper sill hinge locations.

C. 737 Supplemental Structural Inspection Document (D6-37089) Reference:

(1) Item: F-12

2. Equipment

A. The following equipment was used to do this inspection. Other instrument and probe combinations can be used if they get the same results on the reference standard and if they are satisfactory for the conditions of this procedure.

(1) Instrument - Locator UH; Hocking Electronics, Inc. Refer to Part 6, 51-00-00, Procedure 4.

(2) Probes - Refer to Part 6, 51-00-00, Procedure 4.

(a) Right-angle shielded pencil-probes with the following dimensions:

1) "A" 0.5 inch (1.27 cm), "B" 0.625 inch (1.59 cm), "C" 5.0 inches (12.7 cm)

2) "A" 0.030 inch (0.076 cm), "B" 0.155 inch (0.394 cm), "C" 5.0 inches (12.7 cm)

(b) Straight shielded pencil probe.

(c) Bolthole probe - 0.25 inch (0.64 cm) diameter. Refer to Part 6, 51-00-00, Procedure 1.

(3) Reference Standard - Refer to Part 6, 51-00-00, Procedure 1, for the bolthole standard and Part 6, 51-00-00, Procedure 4, for the surface crack standard, Part No. 126.

NOTE: Refer to Part 1, 51-01-00, for information about who makes the equipment.

3. Prepare for the Inspection

A. Surface Inspection (see Figure 1 thru Figure 6)

(1) Remove the inner seats, panels, reveal, insulation and all other related hardware that can cause a blockage of the area of the inspection. (Refer to Figure 1 thru Figure 6).

(2) Set the cargo door in the open position.

(3) Remove the kick panels from the lower part of the door.

(4) Clean the area of the inspection.

B. Bolthole Inspection

(1) Remove the inner hardware to get sufficient access to remove the fasteners that are to be examined. Refer to Figure 5.

(2) Remove the fasteners from the holes that are to be examined. Refer to Figure 5.

NOTE: Remove two fasteners at a time so that the hinge will stay aligned

(3) Refer to Part 6, 51-00-00, Procedure 1, or Part 6, 51-00-00, Procedure 11.

BOEING PROPRIETARY - Copyright © Unpublished Work - See title page for details

4. **Instrument Calibration**

   A. To find surface cracks, refer to Part 6, 51-00-00, Procedure 4.

   B. For the inspection of boltholes, refer to Part 6, 51-00-00, Procedure 1, or Part 6, 51-00-00, Procedure 11.

5. **Inspection Procedure**

   A. Do an inspection for surface cracks in the frame chords and the sills as specified in Figure 1 thru Figure 6. Do the inspection as specified in Part 6, 51-00-00, Procedure 4.

   B. Inspection of the boltholes.

      (1) Remove two of the fasteners identified in Figure 5 and do an inspection for cracks in the fastener holes as specified in Part 6, 51-00-00, Procedure 1, or Part 6, 51-00-00, Procedure 11.

      NOTE: Remove only two fasteners at one time to keep the hinge fitting correctly aligned.

      (2) Install the fasteners removed in Paragraph 5.B.(1).

      (3) Do Paragraph 5.B.(1) and Paragraph 5.B.(2) again until all of the fastener holes identified in Figure 5 are examined.

6. **Inspection Results**

   A. A fast meter movement that occurs as the probe is moved over a short distance is a possible indication of a crack.

   B. Refer to Part 6, 51-00-00, Procedure 4, for the procedure to find surface cracks.

   C. Refer to Part 6, 51-00-00, Procedure 1, or Part 6, 51-00-00, Procedure 11 for the inspection of the bolthole.

BOEING PROPRIETARY - Copyright © Unpublished Work - See title page for details

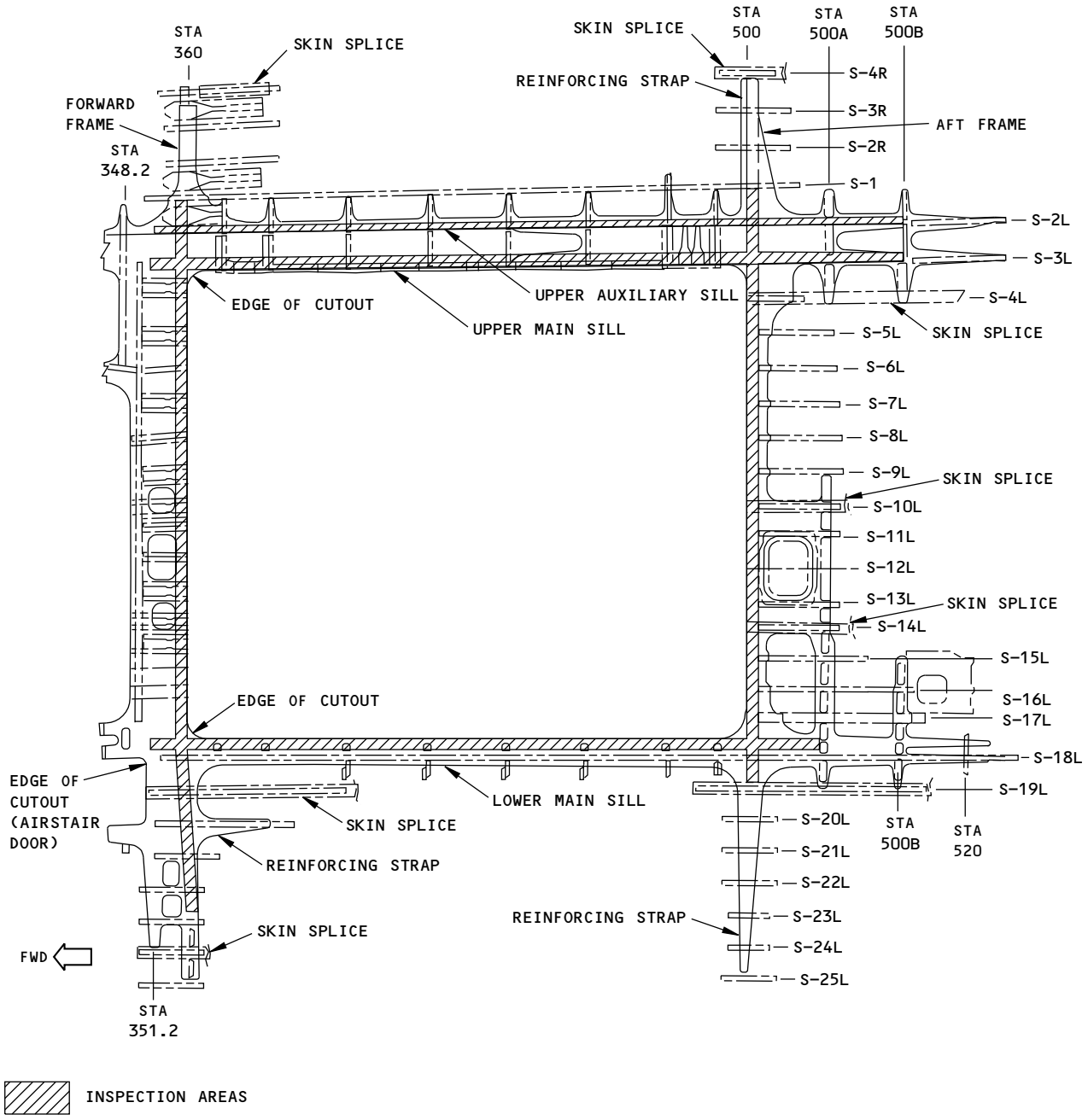

NOTE

- INSPECT ALL OF THE SHADED AREAS AS REFERRED TO IN THE INSTRUCTIONS ON FIGURES 2,3,4,5, AND 6

2159493 S0000471950_V2

Upper Deck Cargo Door Cutout
Figure 1

BOEING PROPRIETARY - Copyright © Unpublished Work - See title page for details

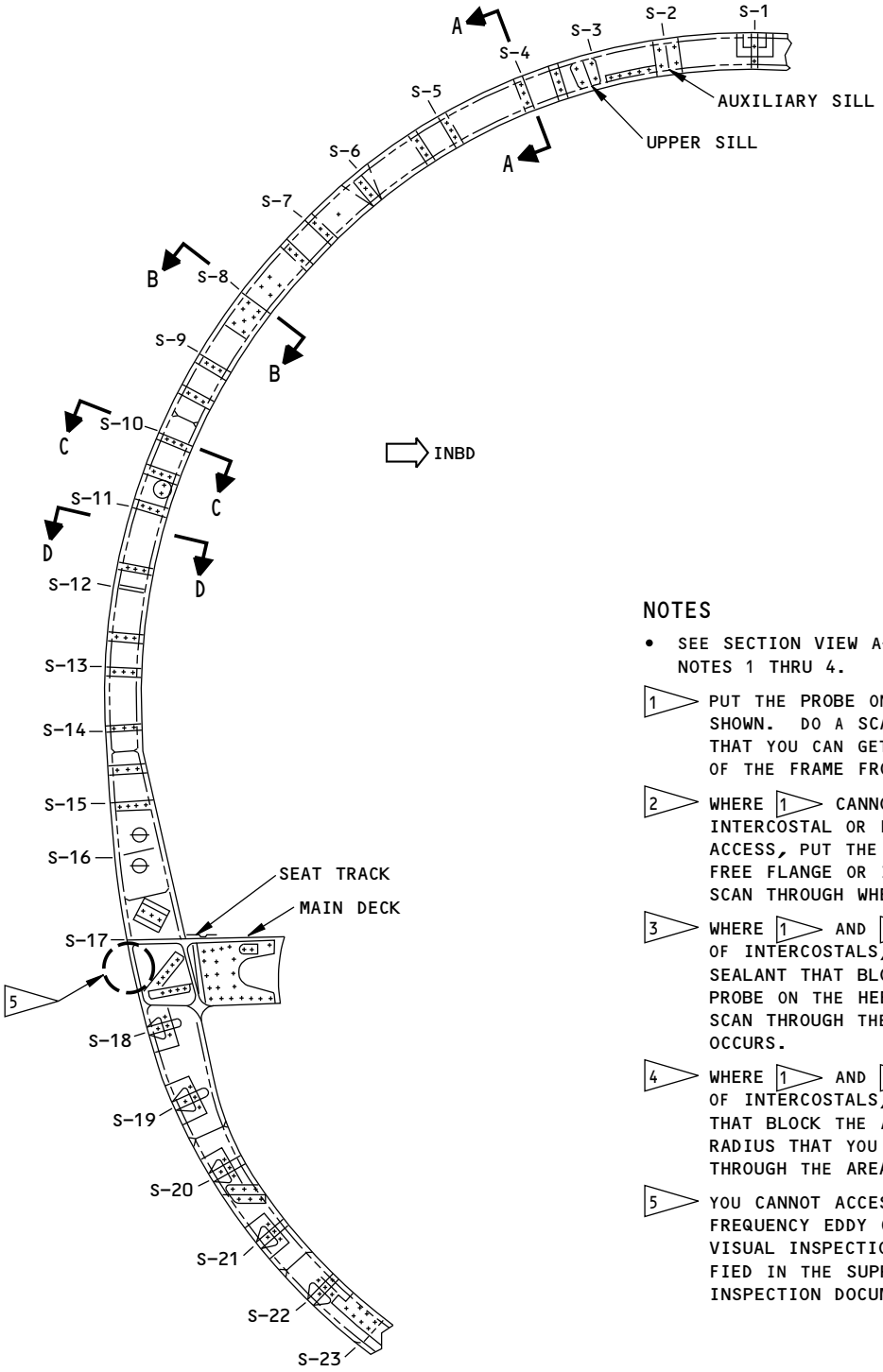

NOTES

- SEE SECTION VIEW A-A THRU D-D FOR FLAG NOTES 1 THRU 4.

1 PUT THE PROBE ON THE FRAME CHORD FLANGES SHOWN. DO A SCAN OF ALL THE LOCATIONS THAT YOU CAN GET ACCESS TO FOR THE LENGTH OF THE FRAME FROM S-1 TO S-23.

2 WHERE 1 CANNOT BE DONE BECAUSE OF AN INTERCOSTAL OR FITTING THAT BLOCKS ITS ACCESS, PUT THE PROBE ON THE EDGE OF THE FREE FLANGE OR IN THE RADIUS AND DO A SCAN THROUGH WHERE THE BLOCKAGE OCCURS.

3 WHERE 1 AND 2 CANNOT BE DONE BECAUSE OF INTERCOSTALS, FITTINGS, FILLERS, OR SEALANT THAT BLOCKS THE ACCESS, PUT THE PROBE ON THE HEEL OF THE CHORD AND DO A SCAN THROUGH THE AREA WHERE THE BLOCKAGE OCCURS.

4 WHERE 1 AND 2 CANNOT BE DONE BECAUSE OF INTERCOSTALS, FITTINGS, AND FILLERS THAT BLOCK THE ACCESS, PUT THE PROBE ON A RADIUS THAT YOU CAN ACCESS AND DO A SCAN THROUGH THE AREA WHERE THE BLOCKAGE OCCURS.

5 YOU CANNOT ACCESS THIS AREA TO DO A HIGH FREQUENCY EDDY CURRENT INSPECTION. DO A VISUAL INSPECTION OF THIS AREA AS SPECIFIED IN THE SUPPLEMENTAL STRUCTURAL INSPECTION DOCUMENT (SSID), ITEM F-12.

2159498 S0000471951_V1

Upper Deck Cargo Door Cutout, Forward Frame at Body Station 360
Figure 2 (Sheet 1 of 2)

BOEING PROPRIETARY - Copyright © Unpublished Work - See title page for details

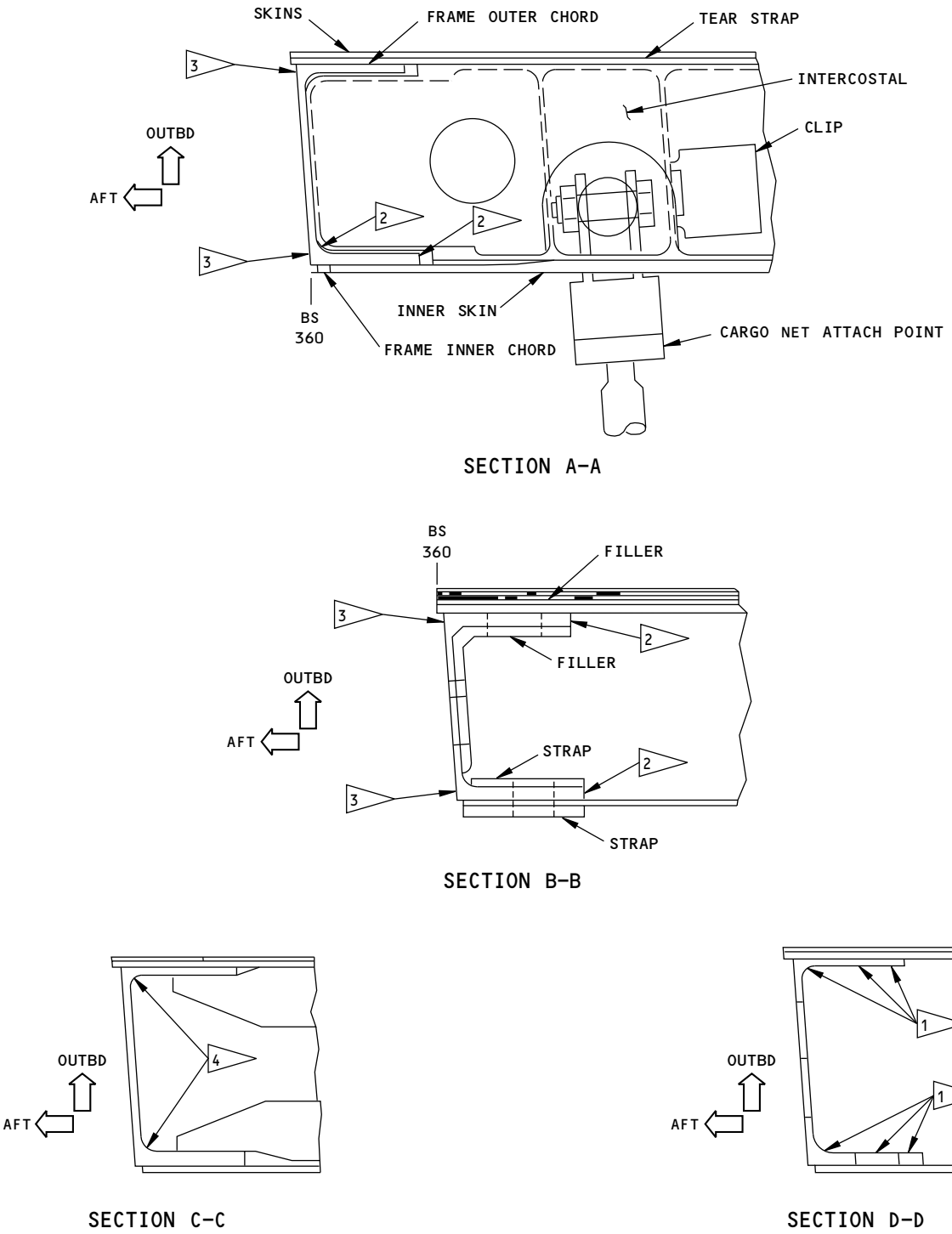

2159499 S0000471952_V1

Upper Deck Cargo Door Cutout, Forward Frame at Body Station 360
Figure 2 (Sheet 2 of 2)

BOEING PROPRIETARY - Copyright © Unpublished Work - See title page for details

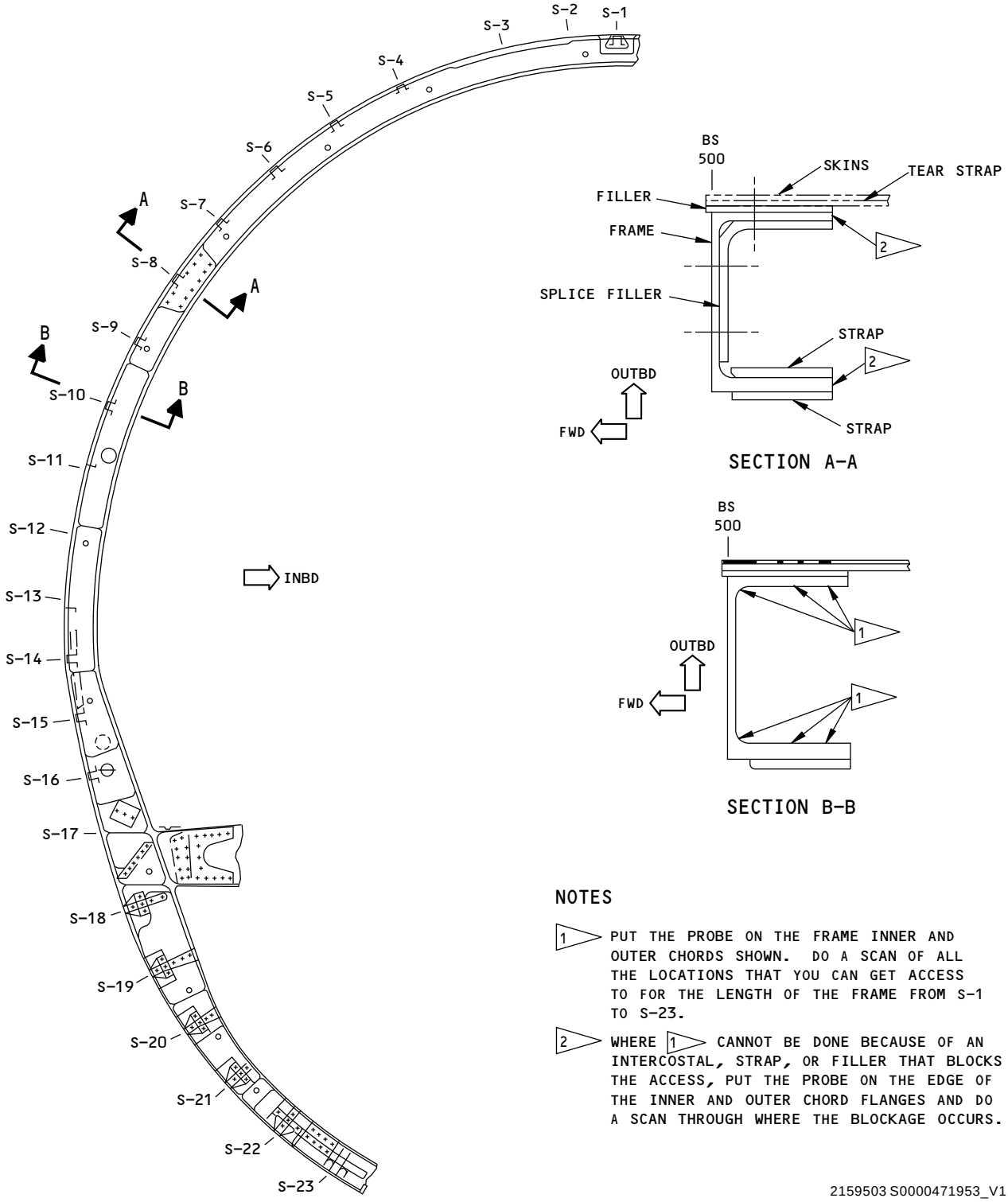

NOTES

1. PUT THE PROBE ON THE FRAME INNER AND OUTER CHORDS SHOWN. DO A SCAN OF ALL THE LOCATIONS THAT YOU CAN GET ACCESS TO FOR THE LENGTH OF THE FRAME FROM S-1 TO S-23.

2. WHERE 1 CANNOT BE DONE BECAUSE OF AN INTERCOSTAL, STRAP, OR FILLER THAT BLOCKS THE ACCESS, PUT THE PROBE ON THE EDGE OF THE INNER AND OUTER CHORD FLANGES AND DO A SCAN THROUGH WHERE THE BLOCKAGE OCCURS.

2159503 S0000471953_V1

Upper Deck Cargo Door Cutout, Aft Frame at Body Station 500
Figure 3

BOEING PROPRIETARY - Copyright © Unpublished Work - See title page for details

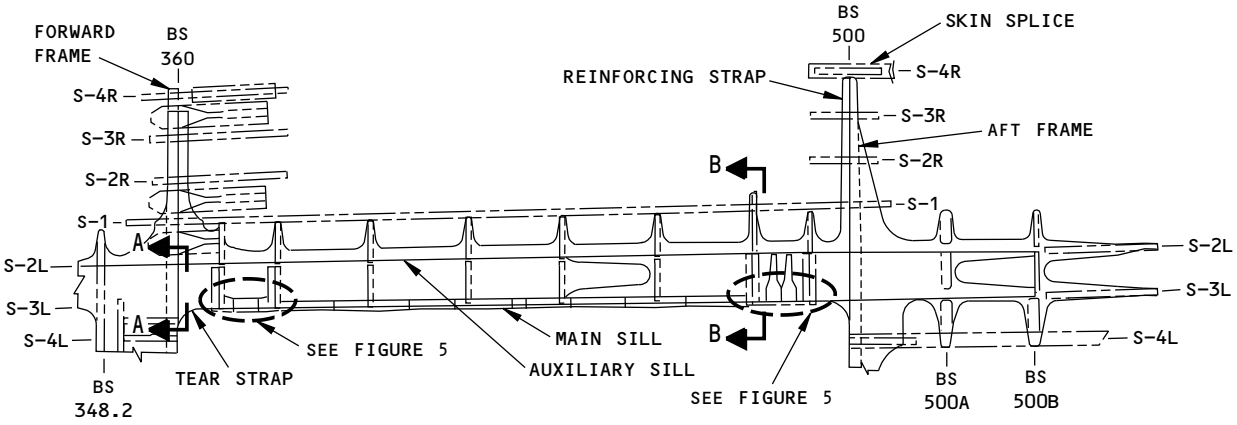

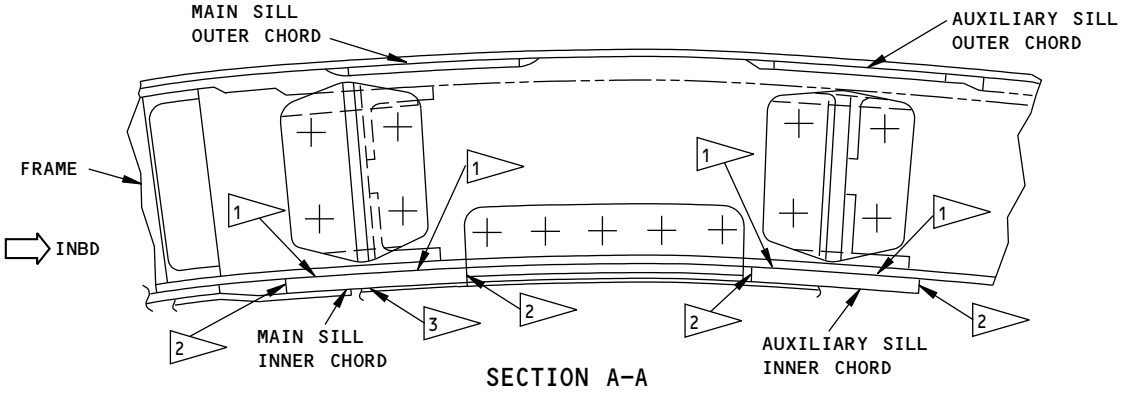

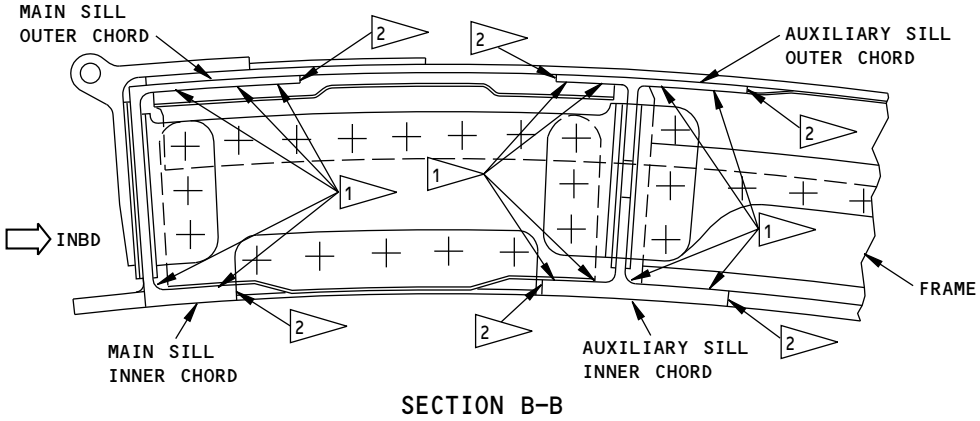

NOTES

1. PUT THE PROBE ON THE INNER AND OUTER CHORD FLANGES SHOWN. DO A SCAN OF ALL THE LOCATIONS THAT YOU CAN GET ACCESS TO FROM BS 360 TO BS 520.
2. WHERE 1 CANNOT BE DONE BECAUSE OF MEMBERS THAT BLOCK ACCESS TO THE AREA OF INSPECTION, PUT THE PROBE ON THE EDGE OF THE SILL INNER AND OUTER CHORD FLANGES AND DO A SCAN THROUGH WHERE THE BLOCKAGE OCCURS.
3. AT BS 360, THE SILL IS BLOCKED BY A CLIP. WHERE 1 AND 2 CANNOT BE DONE, PUT THE PROBE ON THE INNER SILL CHORD AND DO A SCAN THAT USES THE CLIP AS A GUIDE.

2159506 S0000471954_V2

Upper Deck Cargo Door Cutout, Upper Main and Auxiliary Sill
Figure 4

BOEING PROPRIETARY - Copyright © Unpublished Work - See title page for details

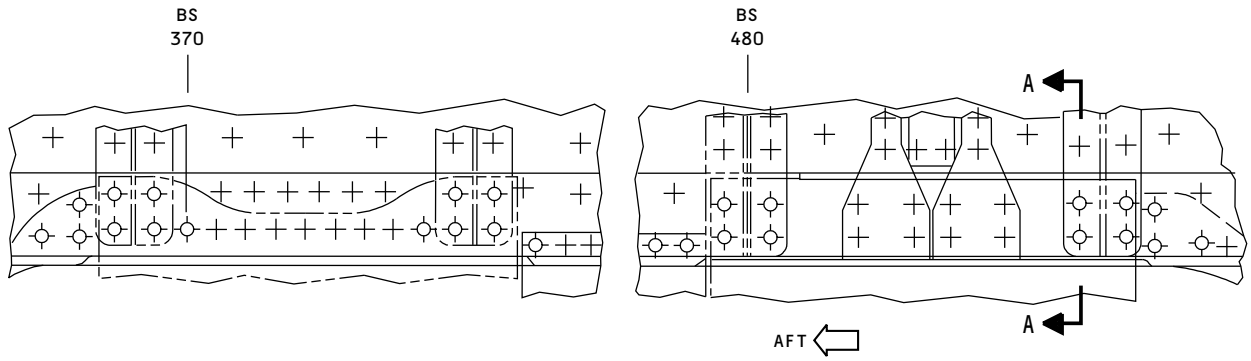

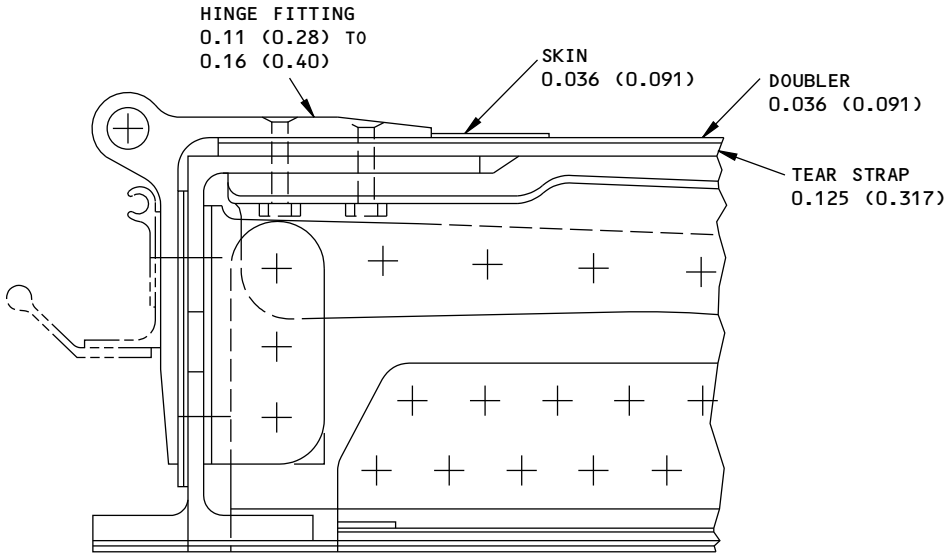

SECTION A-A

NOTES

- ALL DIMENSIONS ARE SHOWN IN INCHES WITH CENTIMETERS SHOWN IN PARENTHESIS
- THE ABOVE FIGURES ARE REFERRED TO IN FIGURE 4
- REMOVE ONLY 2 FASTENERS AT A TIME. SEE PARAGRAPH 5.B. NOTE OF THE TEXT

⊕ DO AN INSPECTION OF THESE FASTENER HOLES

2159508 S0000471955_V1

Upper Deck Cargo Door Cutout, Upper Sill Hinge Fittings
Figure 5

BOEING PROPRIETARY - Copyright © Unpublished Work - See title page for details

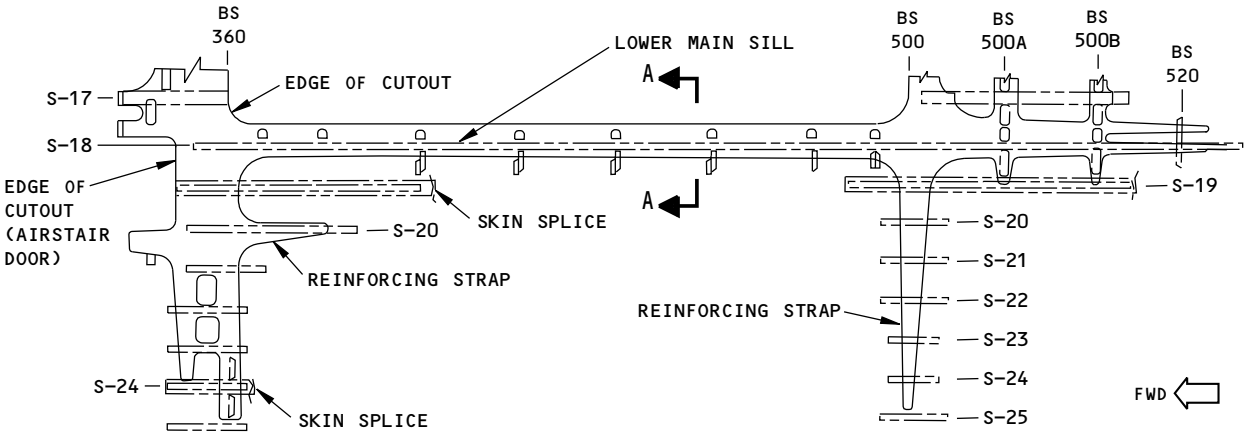

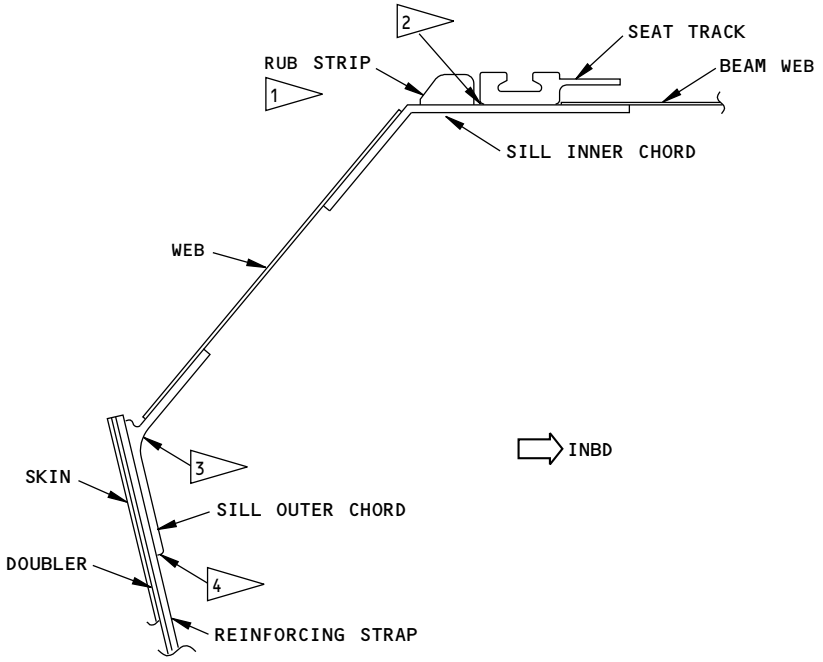

SECTION A-A

NOTES

1. THE RUB STRIP MUST BE REMOVED TO PERFORM THE 2 INSPECTION.
2. PUT THE PROBE ON THE LOWER SILL INNER CHORD WHERE SHOWN. DO A SCAN FOR THE LENGTH OF THE SILL.
3. PUT THE PROBE ON THE LOWER SILL OUTER CHORD WHERE SHOWN. DO A SCAN FOR THE LENGTH OF THE SILL.
4. WHERE 3 CANNOT BE DONE BECAUSE A MEMBER BLOCKS THE ACCESS TO THE AREA OF THE INSPECTION, PUT THE PROBE ON THE EDGE OF THE FLANGE WHERE SHOWN AND DO A SCAN THROUGH THE AREA WHERE THE BLOCKAGE OCCURS.

2159510 S0000471956_V1

Upper Deck Cargo Door Cutout, Lower Sill
Figure 6

BOEING PROPRIETARY - Copyright © Unpublished Work - See title page for details

PART 6 - EDDY CURRENT

MAIN DECK CARGO DOOR CUTOUT - BEAR STRAP DOUBLER (LFEC)

1. **Purpose**
   A. To find cracks in the bear strap doubler, at specified locations, at the main deck cargo door cutout.
   B. 737 Supplemental Structural Inspection Document Reference:
      (1) Item: F-12
2. **Equipment**
   A. Instrument - All eddy current instruments with variable frequency which satisfy the requirements of this procedure can be used. These instruments were used to do this procedure:
      (1) MIZ-10B; Zetec, Inc.
      (2) NDT 19; Nortec-Stavely, Inc.
      (3) AV100; Hocking Instruments
   B. Probe - All probes which satisfy the requirements of this procedure are satisfactory. The following probes were used to do this procedure:

      NOTE: The probe(s) used must be able to operate at 300 Hz, 800 Hz, 1.4 kHz and 2.0 kHz.

      (1) LR058-1; NDT Engineering Corp. (For 3/16 inch fasteners)
         (a) 0.85 inch OD, 0.30 inch ID ring probe
      (2) SPO 3992; Nortec (For 1/4 inch fasteners)
         (a) 1.0 inch OD, 0.42 inch ID ring probe
   C. Reference Standard - Manufacture Reference Standard No. 378. Refer to Figure 2.
3. **Prepare for the Inspection**
   A. Remove the scuff plate and all sealant which covers the specified fasteners.
   B. Remove the hinge fairing plates at the forward and aft ends of the door hinge.
4. **Instrument Calibration**
   A. Calibrate for code A fasteners. See Figure 3.
      (1) Set the instrument frequency at 2.0 kHz.
      (2) Put the probe on the reference standard on Section A, Position A, and visually center the probe over the fastener head.
      (3) Balance the instrument, refer to the instructions of the manufacturer.
      (4) Adjust the instrument for lift-off. If a meter display instrument is used, adjust the phase control so that the response is the same when the probe is on the bare surface as well as when it is lifted off the part by 0.006 inch. If an impedance plane instrument is used, adjust the phase control so that the signal moves horizontally and to the left when the probe is lifted off of the part surface.

         NOTE: Once the lift-off is adjusted, move the probe over the fastener and watch for the minimum indication of the instrument to center the probe over the fastener.

      (5) If a meter instrument is used, set the needle at 20 percent of full scale. If an impedance plane instrument is used, set the balance point in the lower right quadrant of the screen.

BOEING PROPRIETARY - Copyright © Unpublished Work - See title page for details

(6) Put the probe at Position B. The response must be upscale.

(7) Adjust the sensitivity to get 60 percent of full scale difference between Position A (no EDM notch) and Position B (EDM notch). If an impedance plane instrument is used, adjust the sensitivity to get a minimum difference of 60 percent of full screen height.

NOTE: To do this sensitivity adjustment:

(a) Put the probe on Position A.

(b) Adjust the gain of the instrument.

(c) Balance the instrument.

(d) Put the probe on Position B and see the indication of the instrument.

(e) Do Paragraph 4.A.(7)(a) thru Paragraph 4.A.(7)(c) again, if necessary to get the correct indication of the instrument which is 60 percent of full screen height.

B. Calibrate for B code fasteners.

(1) Set the frequency of the instrument at 1.4 kHz.

(2) Put the probe on the reference standard on Section B in Position A.

(3) Do Paragraph 4.A.(3) thru Paragraph 4.A.(6) again.

C. Calibrate for C code fasteners.

(1) Set the instrument frequency at 800 Hz.

(2) Put the probe on the reference standard on Section C in Position A.

(3) Do Paragraph 4.A.(3) thru Paragraph 4.A.(6) again.

D. Calibrate for D code fasteners.

(1) Set instrument frequency at 300 Hz.

(2) Put the probe on the reference standard on Section D in Position A.

(3) Do Paragraph 4.A.(2) thru Paragraph 4.A.(5) again.

5. Inspection Procedure

NOTE: (1) If magnetic steel fasteners are found on the airplane, refer to Paragraph 5.E.

NOTE: (2) The ring probe with the larger inner diameter (0.35 inch to 0.42 inch) works better to examine the larger 1/4 inch fasteners. Reference Standard 378 only has 3/16 inch fasteners. It is satisfactory to do the calibration on these 3/16 inch fasteners to examine the 1/4 inch fasteners on the airplane.

A. Do an inspection of A code fasteners.

(1) Calibrate for A code fasteners, refer to Paragraph 4.A.

(2) Find the A code fasteners, refer to Figure 1 and Figure 4. Use a group of fasteners, such as in the area at B.S. 360, stringers 3 and 4 to find the baseline response of the airplane.

(3) Center the probe over one of the fastener heads in this group. Move the probe over the fastener to get a minimum indication of the instrument.

(4) Balance the instrument.

(5) Compare the indications of three or more additional fasteners in this group with the indication from the first fastener.

BOEING PROPRIETARY - Copyright © Unpublished Work - See title page for details

(6) Use the fastener from this group which has the average indication as the baseline response of the airplane.

(7) Do an inspection of the remaining fasteners with the same fastener code. For the inspection along the frames, complete one vertical row of fasteners before you examine the second vertical row of fasteners. Refer back to the baseline fastener to be sure that the response of the instrument has not changed because of temperature changes, etc.

B. Do an inspection of B code fasteners.

(1) Calibrate for B code fasteners, refer to Paragraph 4.B.

(2) Find the B code fasteners. Refer to Figure 1 and Figure 4. Use a group of fasteners, such as in the area at B.S. 500, stringers 17 to 19 to find the baseline response of the airplane.

(3) Do Paragraph 5.A.(3) thru Paragraph 5.A.(6) again.

C. Do an inspection of C code fasteners.

(1) Calibrate for C code fasteners per Paragraph 4.C.

(2) Find the C code fasteners, refer to Figure 1 and Figure 4. Use a group of fasteners, such as in the area at B.S. 500, stringers 6 thru 8 to find the baseline response of the airplane.

(3) Do Paragraph 5.A.(3) thru Paragraph 5.A.(6).

D. Do an inspection of D code fasteners.

(1) Calibrate for D code fasteners per Paragraph 4.D.

(2) Find the D code fasteners at B.S. 360, lower sill, refer to Figure 1 and Figure 4.

(3) Do Paragraph 5.A.(3) thru Paragraph 5.A.(6).

E. Do an inspection of magnetic steel fastener locations.

NOTE: Use this inspection method if alloy steel (magnetic) fasteners are installed in place of the CRES (non-magnetic) fasteners.

(1) Replace the fasteners in the reference standard for that inspection code with alloy steel fasteners (BACR30FNG-*).

(2) Calibrate the instrument. Refer to Paragraph 4.

(3) Do the inspection. Refer to Paragraph 5.

6. Inspection Results

A. An indication of the meter instrument which is 30 percent of full scale above the balance position, is a sign of a possible crack. An indication of an impedance plane instrument which is 30 percent of full screen height above the balance position, is a sign of a possible crack.

(1) Remove the fastener at such locations and do an inspection on the hole, refer to Part 6, 51-00-00, Procedure 1, or Part 6, 51-00-00, Procedure 11.

BOEING PROPRIETARY - Copyright © Unpublished Work - See title page for details

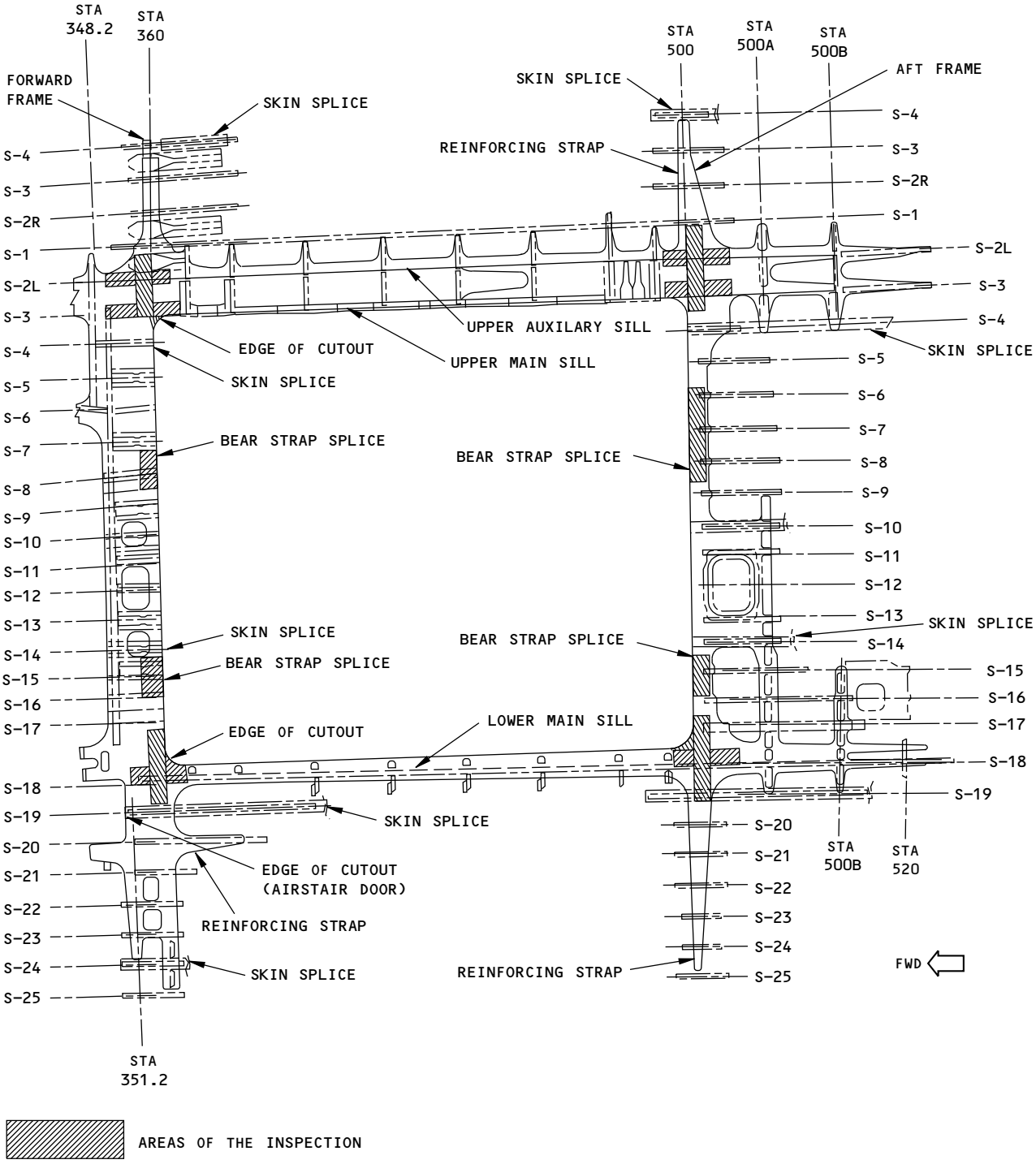

2159522 S0000471958_V1

Main Deck Cargo Door
Figure 1

BOEING PROPRIETARY - Copyright © Unpublished Work - See title page for details

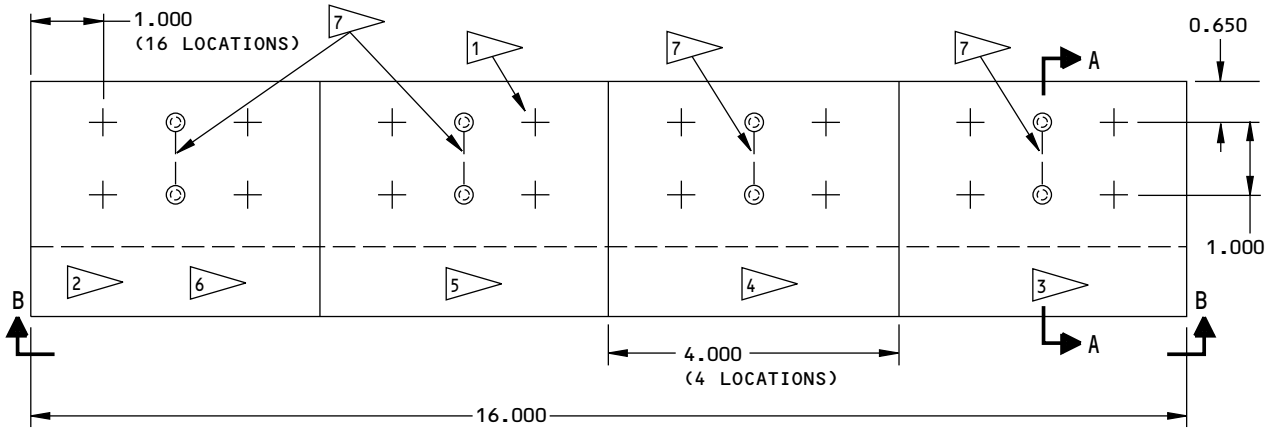

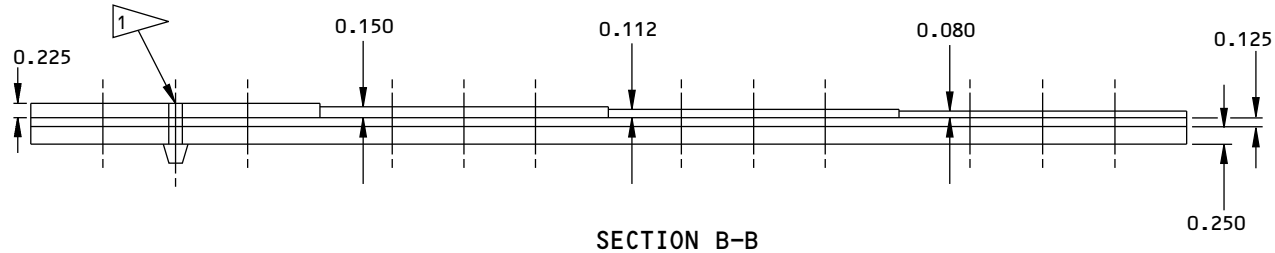

SECTION B-B

NOTES

- ALL DIMENSIONS ARE IN INCHES
- MATERIAL: 2024-T3 CLAD (AS AVAILABLE)
- TOLERANCE: XXX ±0.005
  XX ±0.010
  X ±0.020

1 BACB30FN6A(*) 100 DEGREE COUNTERSINK HEX DRIVE WITH BACC30M-6 COLLAR (24 LOCATIONS)

(±): SHANK LENGTH
SECTION A=7
SECTION B=8
SECTION C=8
SECTION D=10

2 ETCH OR STEEL STAMP 378 THIS LOCATION

3 ETCH OR STEEL STAMP A THIS LOCATION

4 ETCH OR STEEL STAMP B THIS LOCATION

5 ETCH OR STEEL STAMP C THIS LOCATION

6 ETCH OR STEEL STAMP D THIS LOCATION

7 EDM OR SAW CUT NOTCH - MAXIMUM WIDTH 0.030

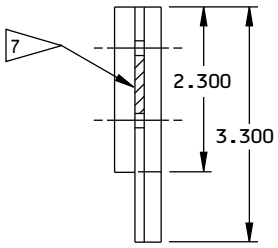

SECTION A-A

2159524 S0000471959_V1

Reference Standard 378
Figure 2

BOEING PROPRIETARY - Copyright © Unpublished Work - See title page for details

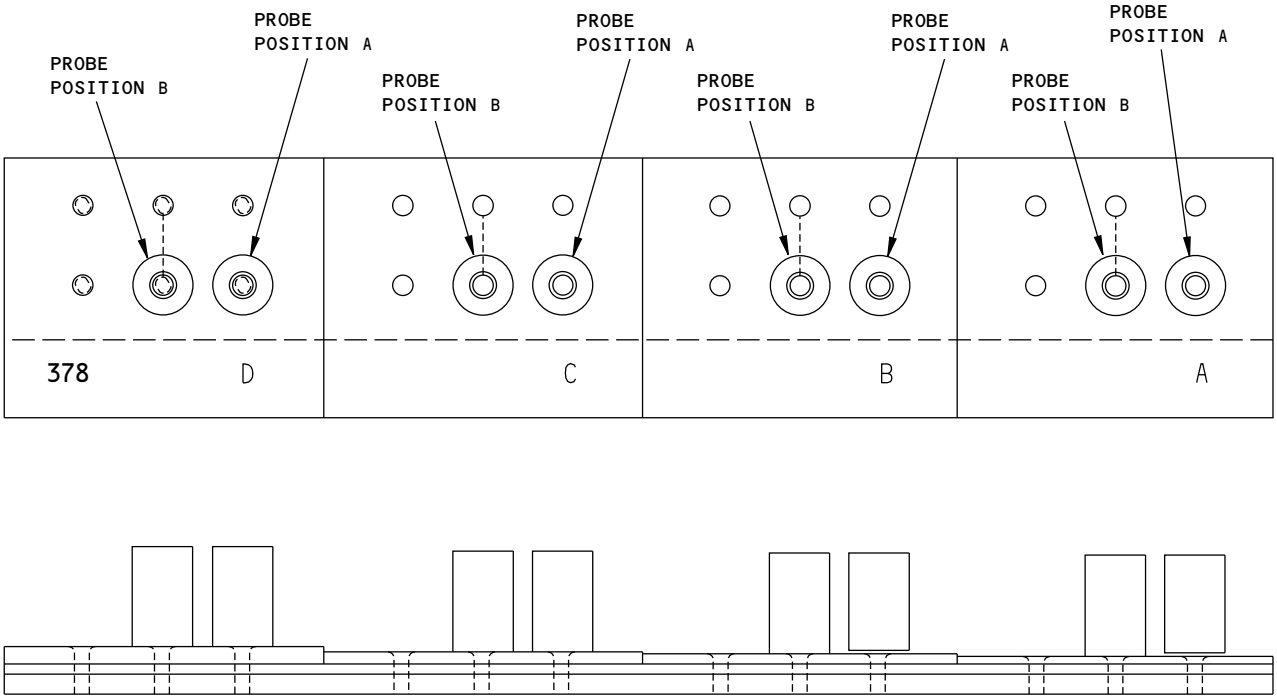

2159526 S0000471960_V1

Probe Positions for Instrument Calibration
Figure 3

BOEING PROPRIETARY - Copyright © Unpublished Work - See title page for details

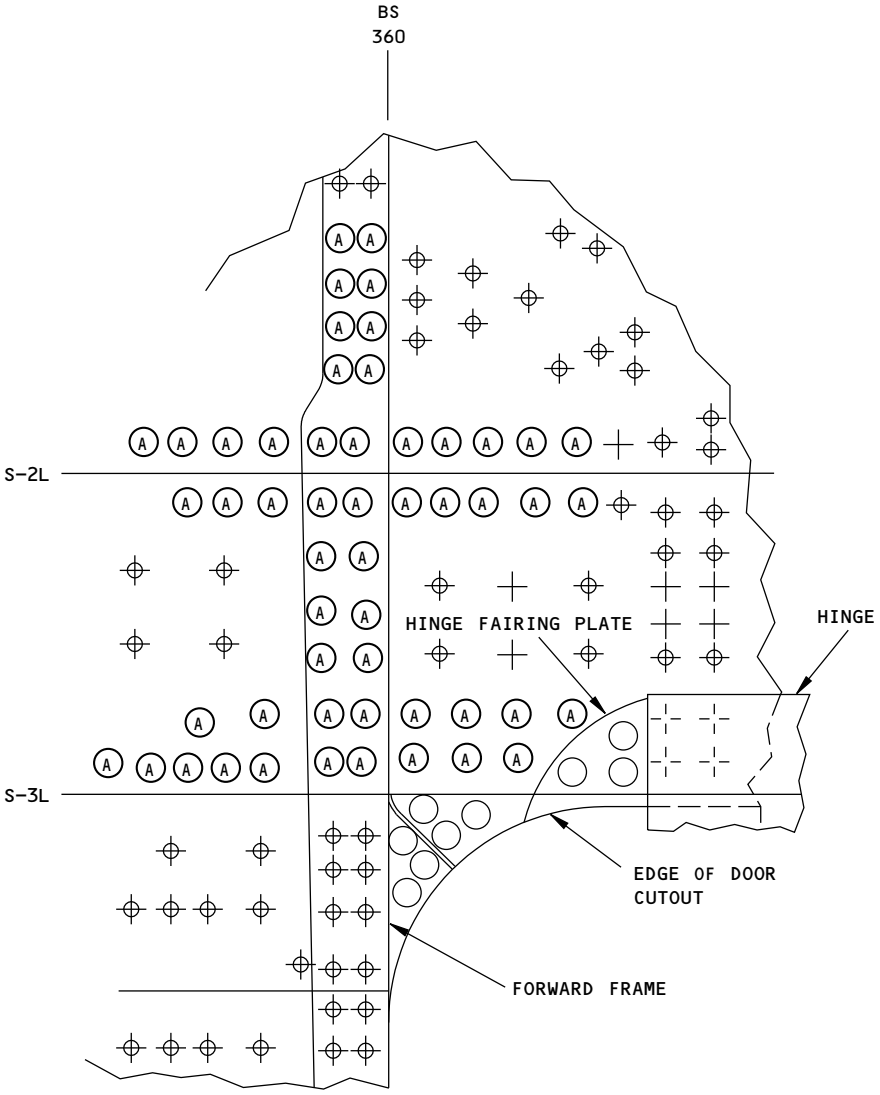

2159528 S0000471961_V1

Location of Coded Fasteners
Figure 4 (Sheet 1 of 8)

BOEING PROPRIETARY - Copyright © Unpublished Work - See title page for details

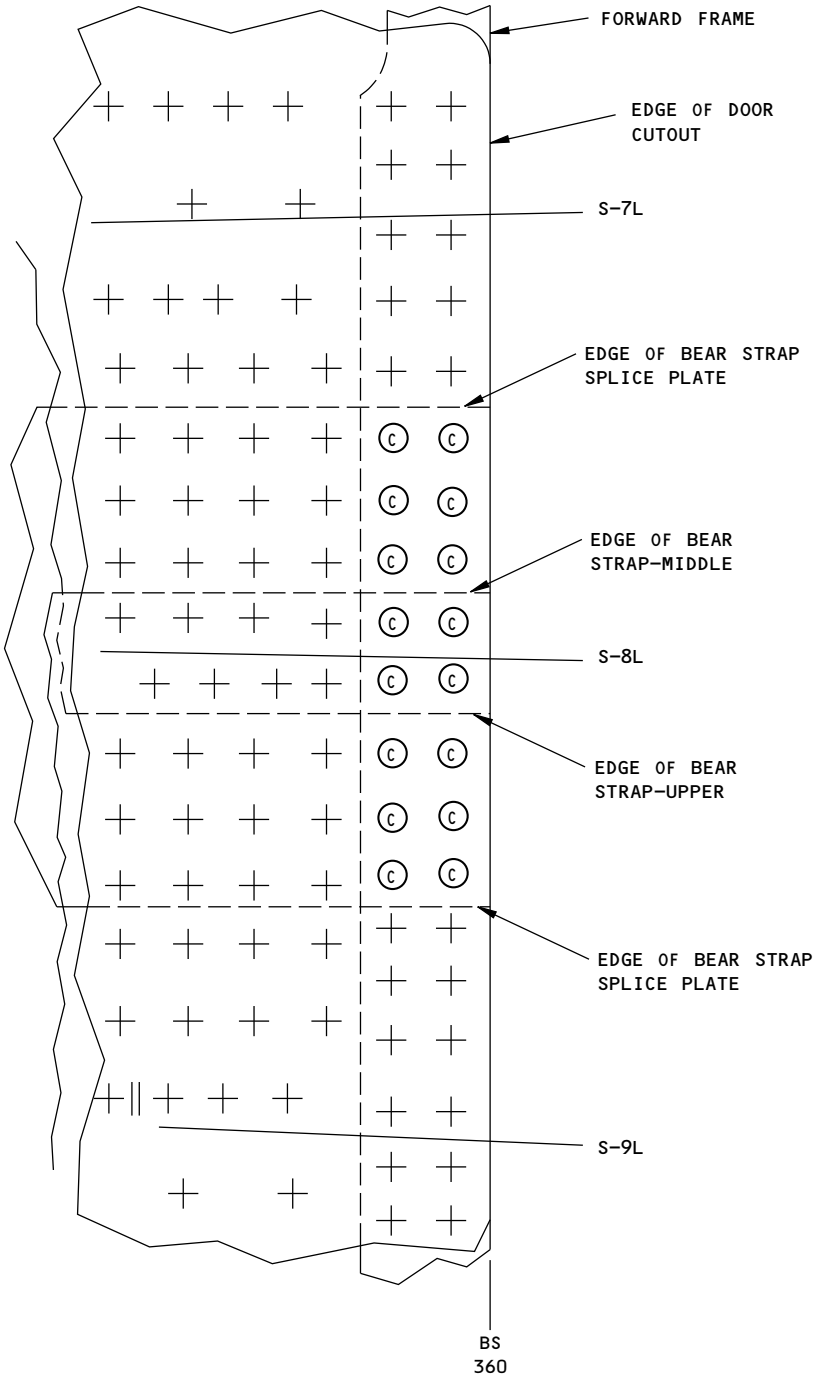

2159530 S0000471962_V1

Location of Coded Fasteners
Figure 4 (Sheet 2 of 8)

BOEING PROPRIETARY - Copyright © Unpublished Work - See title page for details

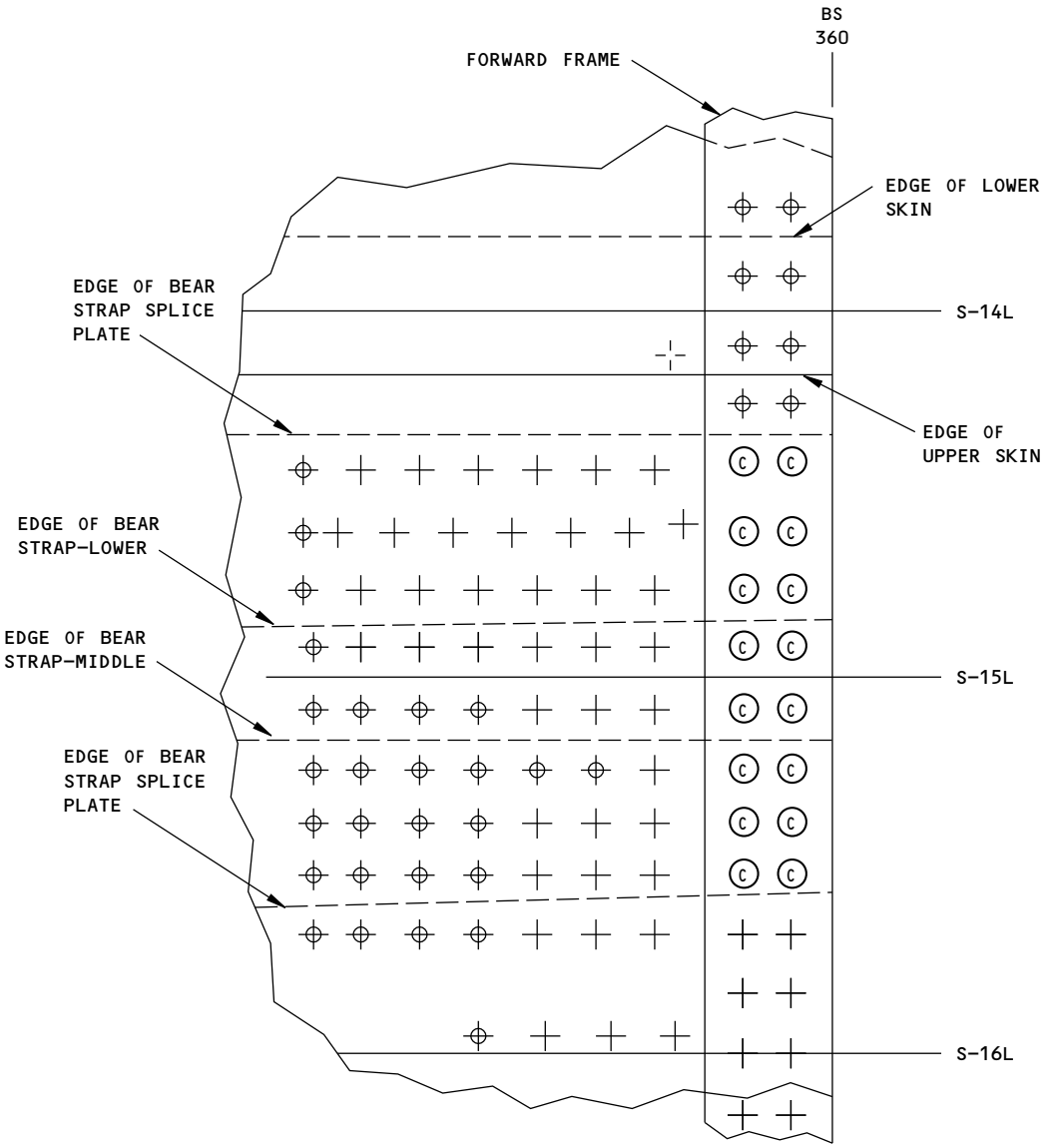

2159533 S0000471963_V1

Location of Coded Fasteners
Figure 4 (Sheet 3 of 8)

BOEING PROPRIETARY - Copyright © Unpublished Work - See title page for details

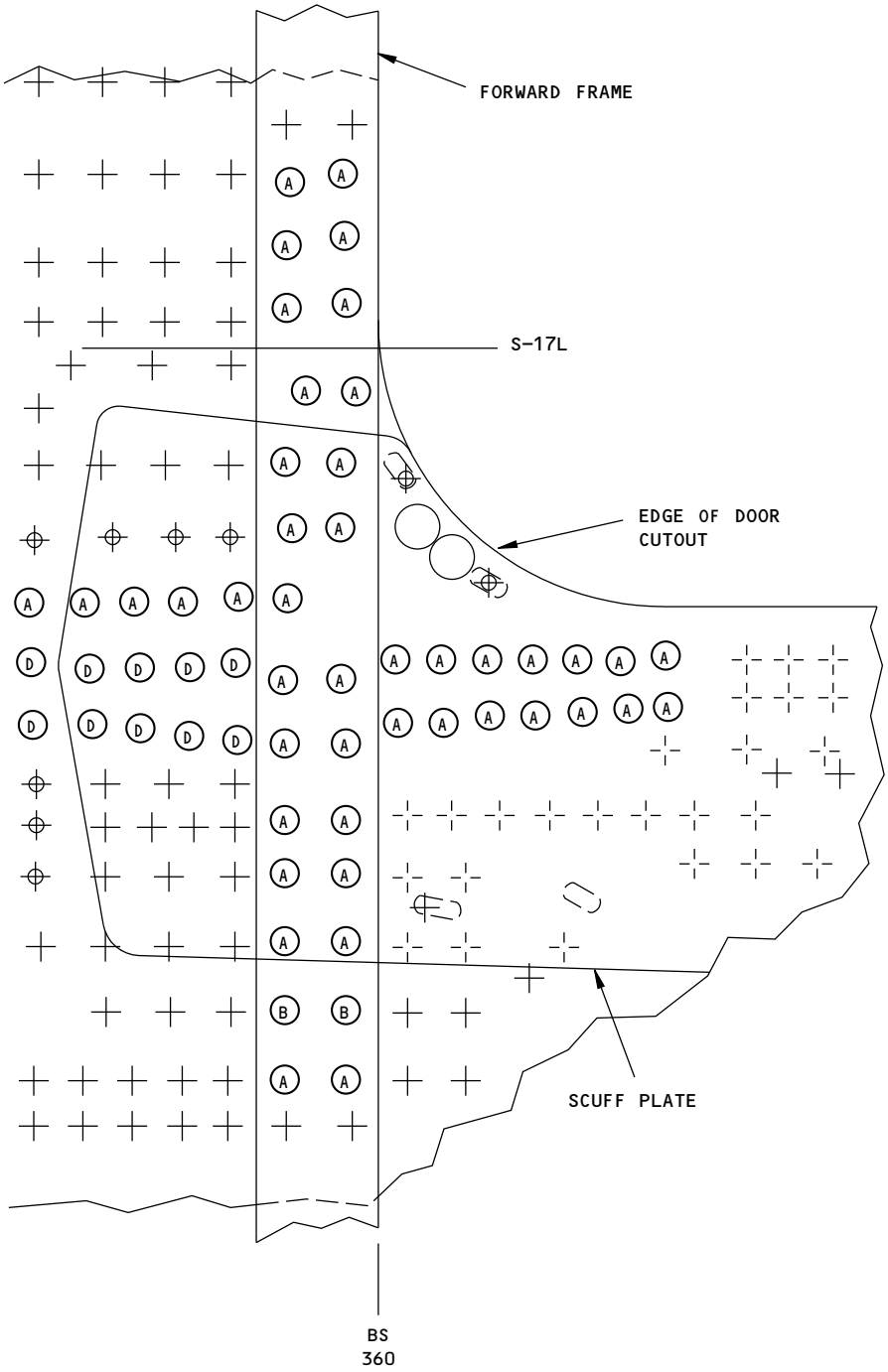

2159536 S0000471964_V1

Location of Coded Fasteners
Figure 4 (Sheet 4 of 8)

BOEING PROPRIETARY - Copyright © Unpublished Work - See title page for details

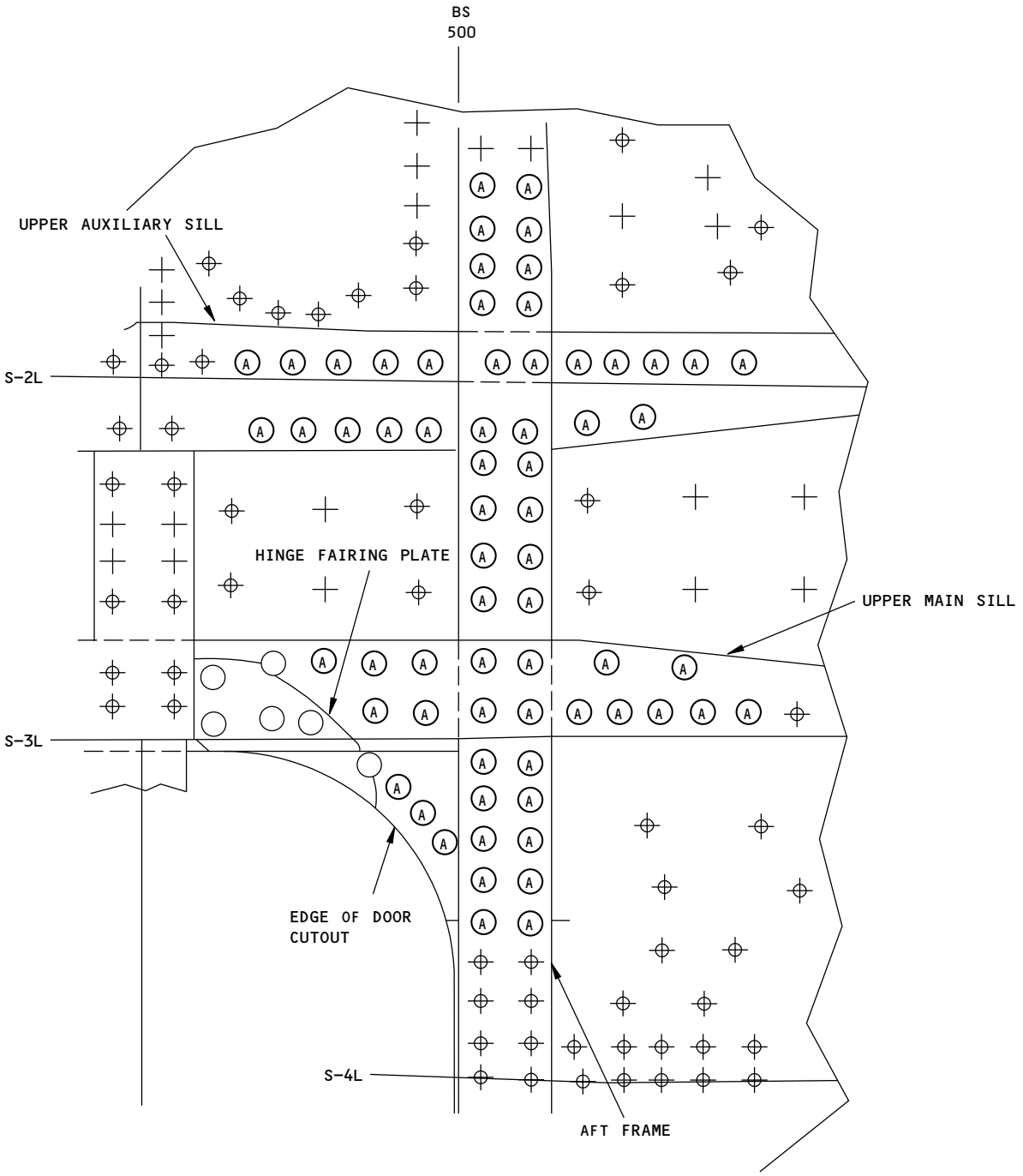

2159537 S0000471965_V1

Location of Coded Fasteners
Figure 4 (Sheet 5 of 8)

BOEING PROPRIETARY - Copyright © Unpublished Work - See title page for details

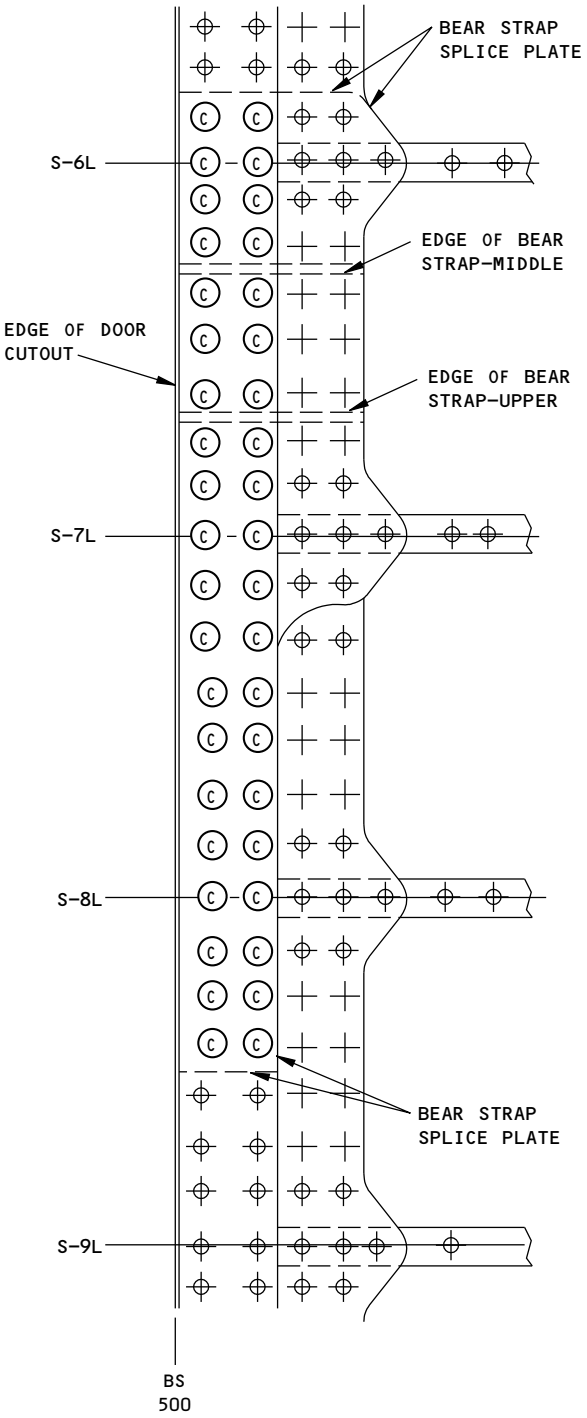

2159548 S0000471966_V1

Location of Coded Fasteners
Figure 4 (Sheet 6 of 8)

BOEING PROPRIETARY - Copyright © Unpublished Work - See title page for details

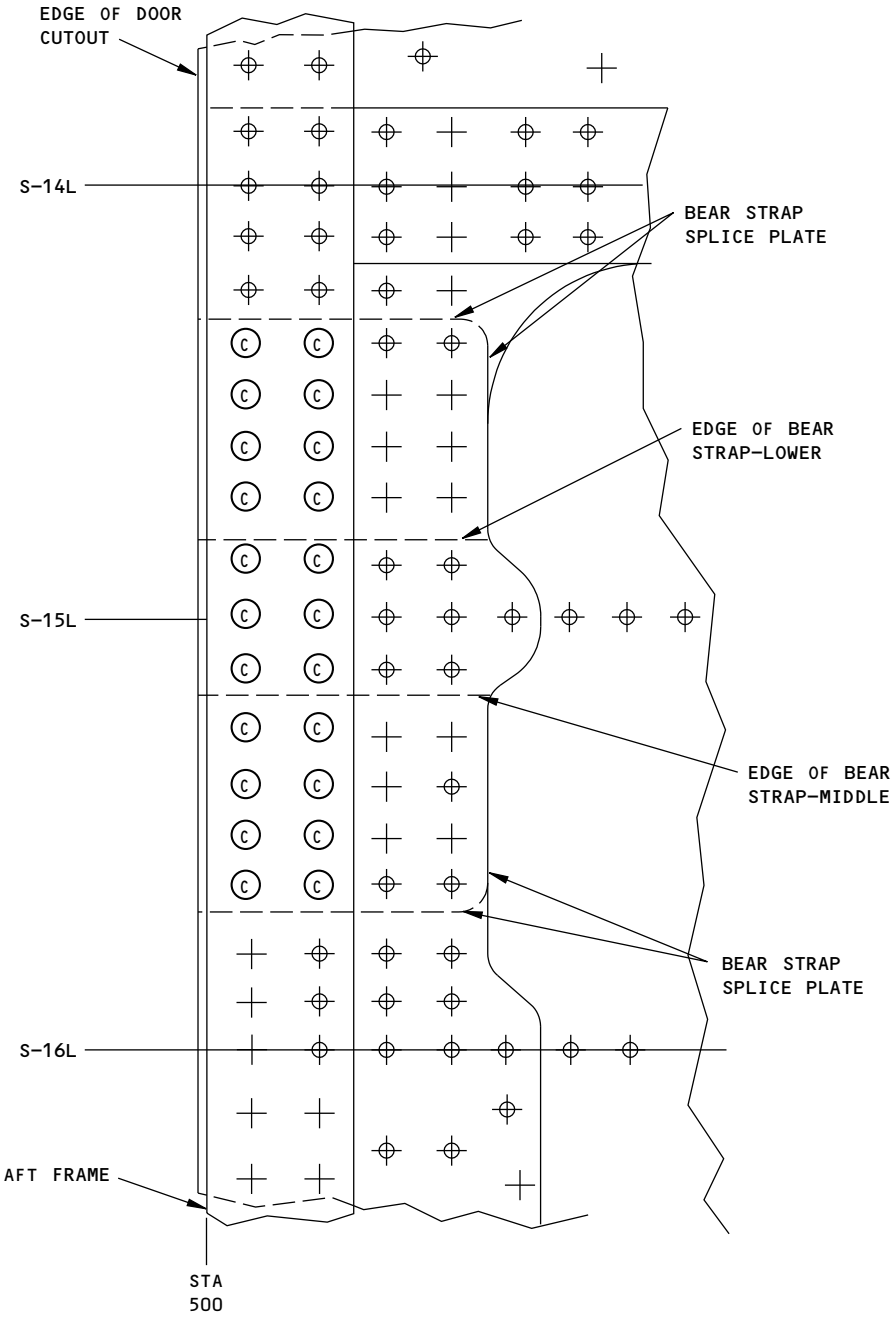

2159613 S0000471967_V1

Location of Coded Fasteners
Figure 4 (Sheet 7 of 8)

BOEING PROPRIETARY - Copyright © Unpublished Work - See title page for details

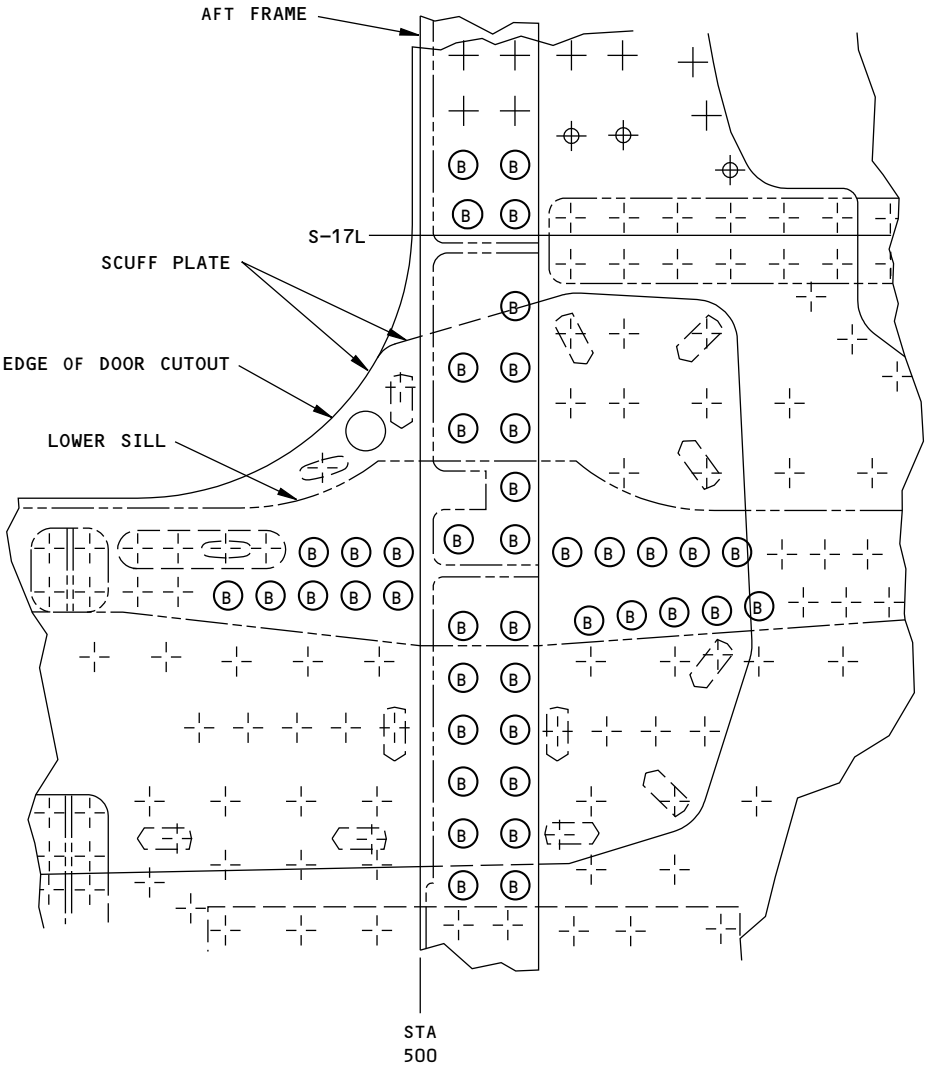

2159616 S0000471968_V1

Location of Coded Fasteners
Figure 4 (Sheet 8 of 8)

BOEING PROPRIETARY - Copyright © Unpublished Work - See title page for details

PART 6 - EDDY CURRENT

FORWARD CORNERS OF THE HORIZONTAL STABILIZER CUTOUT AT THE UPPER HORIZONTAL BEAM (STRINGER S-5A) AND THE LOWER HORIZONTAL BEAM (STRINGER S-12) BODY STATION 1138

1. Purpose

A. To find cracks in the straps (subsurface and surface inspection) and in the chords (surface inspection). See Figure 1 thru Figure 8 for the inspection locations.

B. The beam strap subsurface inspection of this procedure is used to do an inspection of the beam straps through the skin of the airplane. The frame strap subsurface inspection is used to do an inspection of the frame straps through the channel in the airplane. These subsurface inspections will find cracks in the straps that are 0.250 inch in length or longer.

C. The surface inspection of this procedure will find cracks that are 0.125 inch in length or longer.

D. Service Bulletin Reference: 737-53-1134

2. Equipment

NOTE: Refer to Part 1, 51-01-00, for information on the manufacturers of the equipment.

A. Instruments

(1) All eddy-current instruments that have meters are permitted for use if they:

(a) Can operate with the probe between 2 kHz and 5 kHz.

(b) Can operate with the probe between 150 and 500 kHz.

(c) Agree with the necessary conditions of this procedure.

1) The instruments specified below were used to make this procedure:

a) MIZ 10A; Zetec

b) MIZ 10B; Zetec

c) Locator UH; Hocking - for the surface inspection only

B. Probes - Three probes are needed to do this inspection.

(1) For the subsurface beam strap inspection - Use a shielded spot probe that can operate at 2 kHz and has a tip diameter of 0.31 inch or less. This probe will be used to examine the straps through the skin from the external side of the skin (see Figure 2 and Figure 3).

(a) The subsurface probes specified below were used to make this procedure:

1) SPO 1305 1-5 kHz; Nortec

2) SPO 1284 1-5 kHz; Nortec

(2) For the subsurface frame strap inspection - Use a shielded angle spot probe that can operate between 4 kHz and 5 kHz and has a tip diameter of 0.25 inch or less. This probe will be used to examine the frame straps through the channels from in the airplane. (See Figure 14 for the necessary probe dimensions.)

(a) The subsurface probe specified below was used to make this procedure:

1) LP1Q9025-50B/5K; NDT Engineering Corporation

BOEING PROPRIETARY - Copyright © Unpublished Work - See title page for details

(3) For the surface inspection - All shielded 90 degree and/or straight pencil probes that can operate between 150 and 500 kHz. The tip diameter must be 0.125 inch or less. This probe will be used to examine the chord flanges, chord radii, and the areas of the straps that can be seen. See Figure 5, Figure 6, Figure 7, Figure 8 and Figure 9 for the inspection areas.

(a) The surface probes shown below were used to make this procedure:

1) MP902-40BL/500K; NDT Engineering Corporation

2) MP-20 L/500K; NDT Engineering Corporation

C. Reference Standards

(1) Reference standard A376 - See Figure 10, for the beam strap subsurface inspection.

(2) Reference standard A386 - See Figure 11, for the frame strap subsurface inspection.

(3) Reference standard 126 - See Part 6, 51-00-00, Procedure 4, for the surface inspection.

3. Prepare for the Inspection

A. Prepare for the subsurface inspection of the beam straps as follows:

(1) Make sure that the instrument, probe, reference standard, and the aircraft are at the same temperature.

(2) Move the horizontal stabilizers as necessary to get access to the inspection areas.

(3) Make sure that the airplane skins are clean in the inspection areas. See Figure 2 and Figure 3 for the inspection areas.

B. Prepare for the subsurface inspection of the frame straps as follows:

(1) Make sure that the instrument, probe, reference standard, and the aircraft are at the same temperature.

CAUTION: BEFORE ACCESS TO THE STAR TRUSS IS MADE, MAKE SURE THE STAR TRUSS CANNOT OPERATE. DISCONNECT THE CONNECTIONS SO THAT THE STAR TRUSS CANNOT MOVE UP OR DOWN.

(2) Move the star truss to the "full up" position. Get access to the inspection area aft of BS 1138 in the airplane at panel P-25. Panel P-25 is aft of the pressure dome. Go below the star truss.

(3) Make sure that the channel in the inspection area that is immediately aft of BS 1138 and immediately above stringer 12 is clean.

C. Prepare for the surface inspection of chords, chord radii, and the strap areas as follows:

(1) Make sure that the instrument, probe, reference standard, and the aircraft are at the same temperature.

CAUTION: BEFORE ACCESS TO THE STAR TRUSS IS MADE, MAKE SURE THE STAR TRUSS CANNOT OPERATE. DISCONNECT THE CONNECTIONS SO THAT THE STAR TRUSS CANNOT MOVE UP OR DOWN.

(2) Place the Star Truss structure in the up position.

(3) Get access to the inspection area at BS 1138 in the aircraft at panel P25. Panel P25 is aft of the pressure dome. Go on top of the Star Truss.

NOTE: For access to the inspection area of stringer S-5A, go up through the center of the Star Truss.

BOEING PROPRIETARY - Copyright © Unpublished Work - See title page for details

(4) Make sure the chords are clean at least 8 inches forward and aft from BS 1138 at these areas:

(a) Stringer S-5A, left and right side, upper and lower chords (access to the upper chords from BS 1138 to BS 1146 is through one of the lightening holes in the web at BS 1138). See Figure 5.

NOTE: A mirror and a flashlight will be a good visual aid to see the upper chords from BS 1138 to BS 1146.

(b) Stringer S-12, left and right side, upper chord only. See Figure 7.

(5) Clean the left and right side strap areas that are shown in Figure 6, Figure 8, and Figure 9.

4. Instrument Calibration

A. Calibration for the subsurface inspection of the beam straps.

(1) Set the instrument frequency to 2 kHz.

(2) Put the probe at Position 1 on reference standard A376. See Figure 12.

(3) Use the manufacturer's instructions to balance the instrument.

(4) Set lift-off at Position 1 (see Figure 12). Set lift-off so that the meter needle moves no more than 5 percent of full scale for probe to part distances of up to 0.006 inch (thickness of two sheets of paper).

(5) Put the probe on reference standard A376 adjacent to the fastener head that does not have a notch adjacent to it. See Figure 12, Position 2.

(6) Balance the instrument again.

(7) Adjust the meter position control to set the meter needle to 20 percent of full scale.

(8) Put the probe on reference standard A376 adjacent to the fastener head that has a notch adjacent to it. See Figure 12, Position 3.

(9) Move the probe around this fastener head to make a scan. Adjust the instrument sensitivity to get a meter response which is 90 percent of full scale (70 percent of full scale higher than the balance position).

NOTE: Make sure that the probe edge does not go on the edge of the fastener during the scan. If this occurs, an upscale needle movement will occur. Make the scan as close to the fastener as possible.

(10) Do a check of the lift-off again as specified in Paragraph 4.A.(4).

B. Calibration for the subsurface inspection of the frame straps which are under the channels at the areas shown in Figure 4.

(1) Set the instrument frequency between 4 kHz and 5 kHz.

(2) Put the probe at Position 1 on reference standard A386. See Figure 13.

(3) Use the manufacturer's instructions to balance the instrument.

(4) Set lift-off at Position 1 (see Figure 13). Set lift-off so that the meter needle moves no more than 5 percent of full scale for probe to part distances of up to 0.006 inch (thickness of two sheets of paper).

(5) Put the probe on reference standard A386 adjacent to the rivet end that does not have a notch adjacent to it. See Figure 13, Position 2.

(6) Balance the instrument again.

BOEING PROPRIETARY - Copyright © Unpublished Work - See title page for details

(7) Adjust the meter position control to set the meter needle to 20 percent of full scale.

(8) Put the probe on reference standard A386 adjacent to the rivet end that has a notch adjacent to it. See Figure 13, Position 3.

(9) Move the probe around this rivet end to make a scan. Adjust the instrument sensitivity to get a meter response which is 70 percent of full scale (50 percent of full scale higher than the balance position).

(10) Do a check of the lift-off again as specified in Paragraph 4.B.(4).

C. Calibration for the surface inspection of the chord flanges, chord radii, and strap areas shown in Figure 5, Figure 6, Figure 7, Figure 8, and Figure 9.

(1) Set the instrument between 150 and 500 kHz. Calibrate a surface probe and the instrument with reference standard 126 as shown in Part 6, 51-00-00, Procedure 4.

5. Inspection Procedure

A. Inspection procedure for the subsurface inspection of the beam straps.

(1) Calibrate the equipment as specified in Paragraph 4.A.

(2) Put the probe on the skin adjacent to a fastener at BS 1138, Stringer S-5A, or Stringer S-12.

(3) Balance the instrument and adjust the needle to 20 percent on the meter.

(4) Do a scan with the probe in the areas specified in Paragraph 5.A.(5). To do the scan, first move the probe in a horizontal direction between the fasteners. Move the probe in increments of 0.250 inch between each horizontal scan. Then move the probe in a vertical direction between the fasteners. Move the probe in increments of 0.250 inch between each vertical scan.

(5) Use the scan procedure of Paragraph 5.A.(4) to examine the areas specified below for each side of the airplane. See Figure 2 and Figure 3:

(a) Stringer S-5A, from the butt splice to 2.5 inches above the butt splice. Do a scan between rows of fasteners from BS 1130 to BS 1140. See Figure 2.

(b) Stringer S-5A, from the butt splice to 2 inches below the butt splice. Start the scan at the forward edge of the steel rub plate and go to BS 1130. See Figure 2.

(c) Stringer S-12, from the butt splice to 0.5 inch below the steel rub plate at BS 1138. Do a scan between the vertical row of the fasteners. See Figure 3.

(d) Stringer S-12, above and below the butt splice. Do a scan between the fasteners from BS 1130 to BS 1143. See Figure 3.

(e) Stringer S-12, below the butt splice at BS 1138 down 5 inches. Do a scan between the triple row of fasteners. See Figure 3.

B. Inspection procedure for the subsurface inspection of the frame straps through the channels.

(1) Calibrate the equipment as specified in Paragraph 4.B.

(2) Put the probe on the channel adjacent to the aft side of the rivet end immediately aft of BS 1138 and immediately above stringer S-12 (see Figure 4).

(3) Balance the instrument and adjust the needle to 20 percent on the meter.

(4) Do a scan with the probe around the rivet end as shown in Figure 4.

BOEING PROPRIETARY - Copyright © Unpublished Work - See title page for details

(5) Make sure a probe scan is done around the rivet ends on the left and right sides of the airplane.

NOTE: If the probe goes near the edge of the channel, an upscale needle movement will occur. If the probe shielding is not sufficient, an upscale needle movement will occur when the probe goes near the steel nut plate. The steel nut plate location is immediately above the area of inspection.

C. Inspection procedure for the surface inspection of chord flanges, chord radii, and strap areas.

(1) Calibrate the equipment as specified in Paragraph 4.C.

(2) Do an inspection on the chord flanges before an inspection of the chord radii is done. Do a scan of the chord flanges in two directions 90 degrees to each other between the rivet ends and nut plates. Do a scan with the probe around the rivet ends and nut plates. Balance the probe in the chord radius of a good area before an inspection of the radius is done. Do an inspection of the areas specified below for each side of the airplane (refer to Part 6, 51-00-00, Procedure 4):

(a) Stringer S-5A, vertical and horizontal flanges of the upper and lower chords and the chord radii from BS 1130 to BS 1146. See Figure 5. Access to this area is through the lightening holes in the web at BS 1138.

NOTE: A mirror and a flashlight will be a good visual aid to see the upper chords from BS 1138 to BS 1146.

(b) Stringer S-12, vertical and horizontal flanges of the upper chord and chord radii from BS 1130 to BS 1146. See Figure 7.

(c) The beam strap surface location immediately aft of BS 1138 and just below stringer S-5A. See Figure 6.

(d) The frame strap surface location immediately aft of BS 1138 and between stringer S-12 chord flange and the channel. See Figure 8.

(e) The frame strap surface location immediately aft of BS 1138 and between stringer S-5A and the top of the channel above stringer S-12. See Figure 9.

6. Inspection Results

A. Inspection results for the subsurface inspection.

(1) Upscale needle movements that are 30% (or more) of full scale higher than the balance position are indications of a crack.

NOTE: If the probe goes across the edge of the strap from the external side of the aircraft, an upscale needle movement will occur.

NOTE: An upscale indication can occur if a probe scan is done near the frame edge from the internal side (see Figure 4). Examine all crack-like indications as specified in Part 6, 51-00-00, Procedure 1, or Part 6, 51-00-00, Procedure 11 (with the fasteners removed).

B. Inspection results for the surface inspection.

(1) Refer to Part 6, 51-00-00, Procedure 4, for surface inspection results.

BOEING PROPRIETARY - Copyright © Unpublished Work - See title page for details

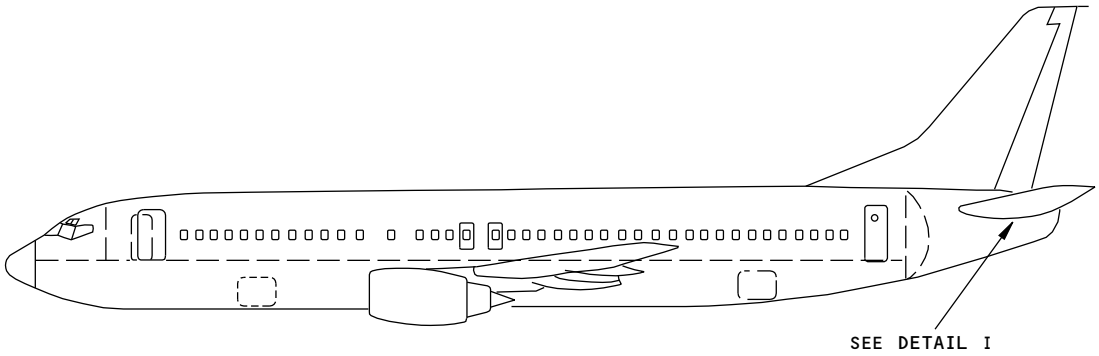

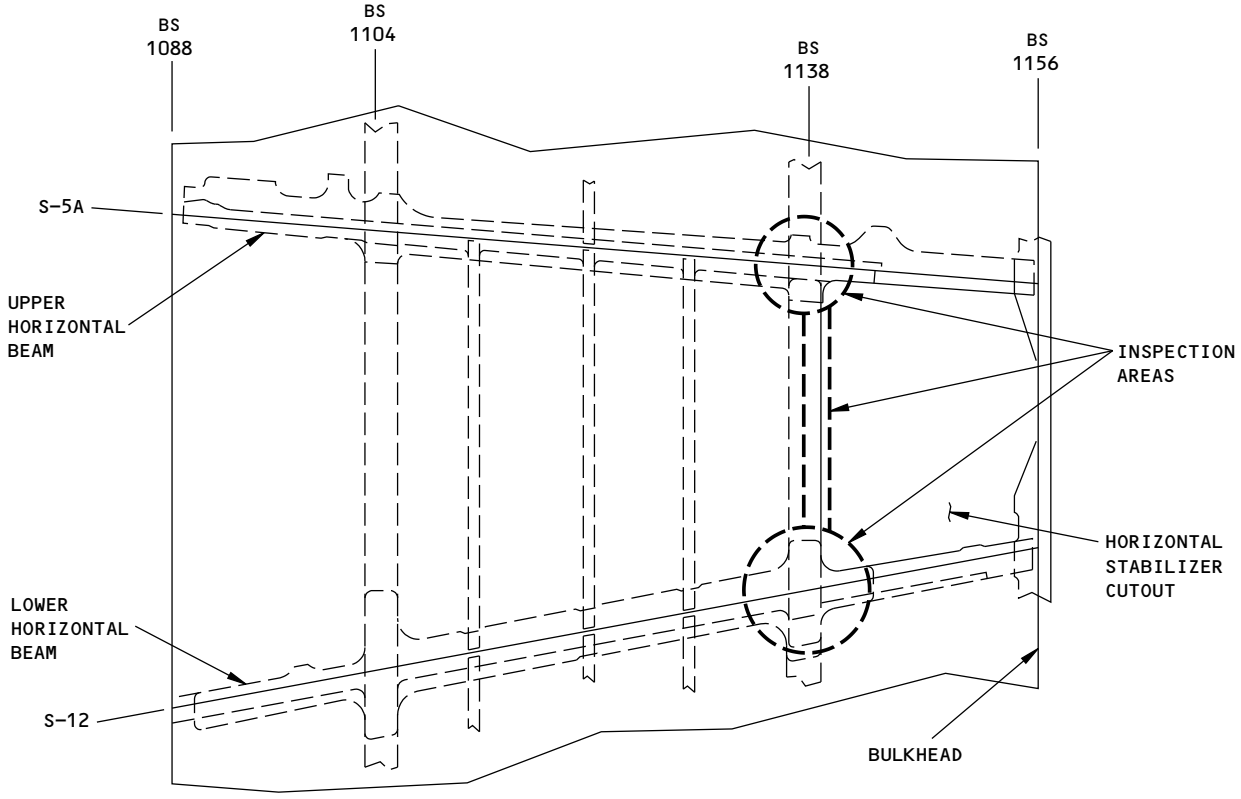

DETAIL I

NOTES

- LEFT SIDE SHOWN, RIGHT SIDE OPPOSITE
- HORIZONTAL STABILIZER NOT SHOWN

2159619 S0000471970_V1

Inspection Areas
Figure 1

BOEING PROPRIETARY - Copyright © Unpublished Work - See title page for details

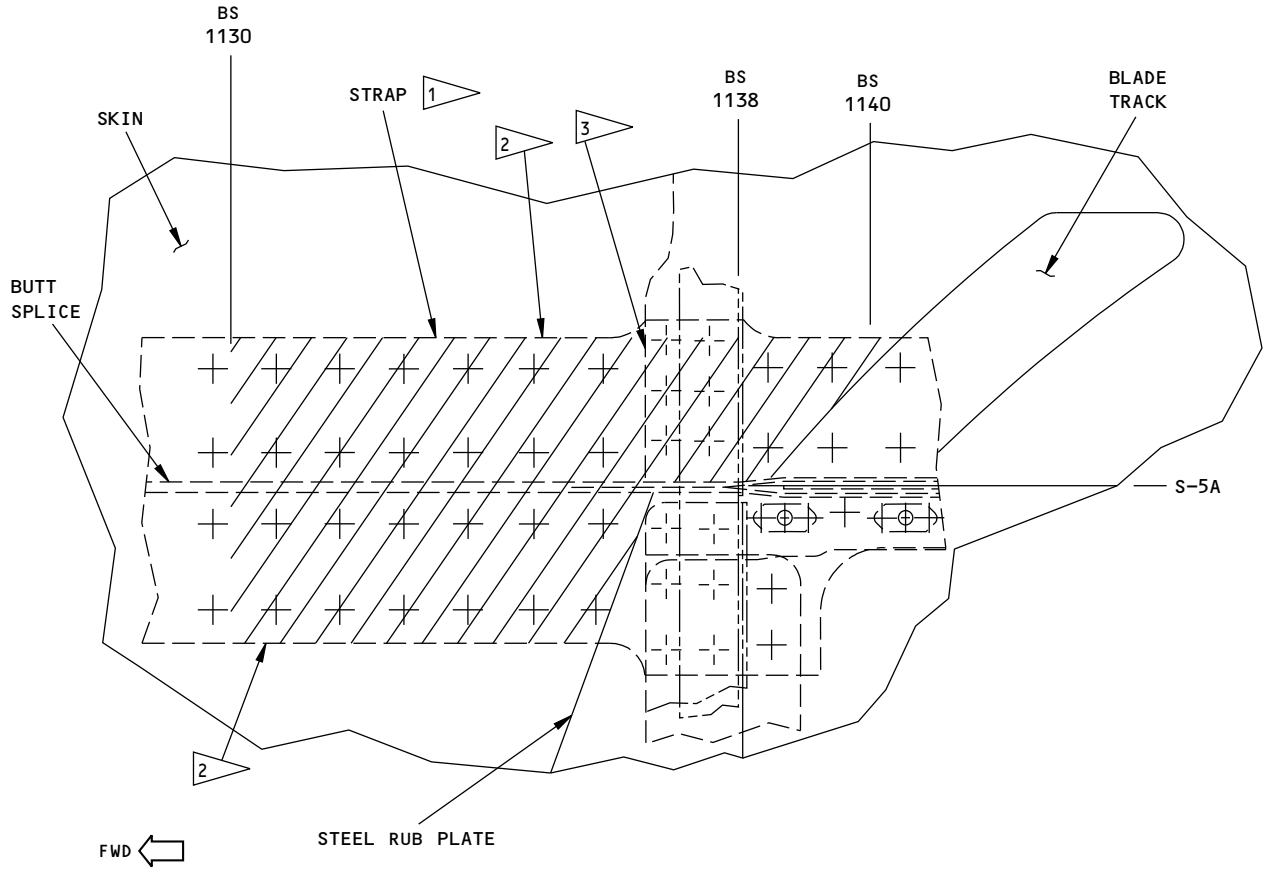

INSPECTION AREA

NOTES

- EXTERNAL VIEW; LEFT SIDE SHOWN, RIGHT SIDE OPPOSITE
- HORIZONTAL STABILIZER NOT SHOWN

1 DO A SCAN OF THE STRAP THROUGH THE SKIN FROM BS 1130 TO BS 1140.
- MOVE THE PROBE BETWEEN FASTENERS IN A HORIZONTAL DIRECTION. MOVE THE PROBE IN INCREMENTS OF 0.250 INCH BETWEEN EACH HORIZONTAL SCAN.
- MOVE THE PROBE BETWEEN FASTENERS IN A VERTICAL DIRECTION. MOVE THE PROBE IN INCREMENTS OF 0.250 INCH BETWEEN EACH VERTICAL SCAN.

2 IF THE PROBE GOES ACROSS THE EDGE OF THE STRAP DURING THE SCAN, AN UPSCALE INDICATION WILL OCCUR.

3 A SKIN THICKNESS CHANGE AT THIS LOCATION CAN CAUSE AN INDICATION. COMPARE AN INDICATION FROM THIS AREA WITH THE NOTCH SIGNAL YOU GOT DURING CALIBRATION FROM THE REFERENCE STANDARD.

2159621 S0000471971_V1

Subsurface Inspection of Strap - Stringer S-5A
Figure 2

BOEING PROPRIETARY - Copyright © Unpublished Work - See title page for details

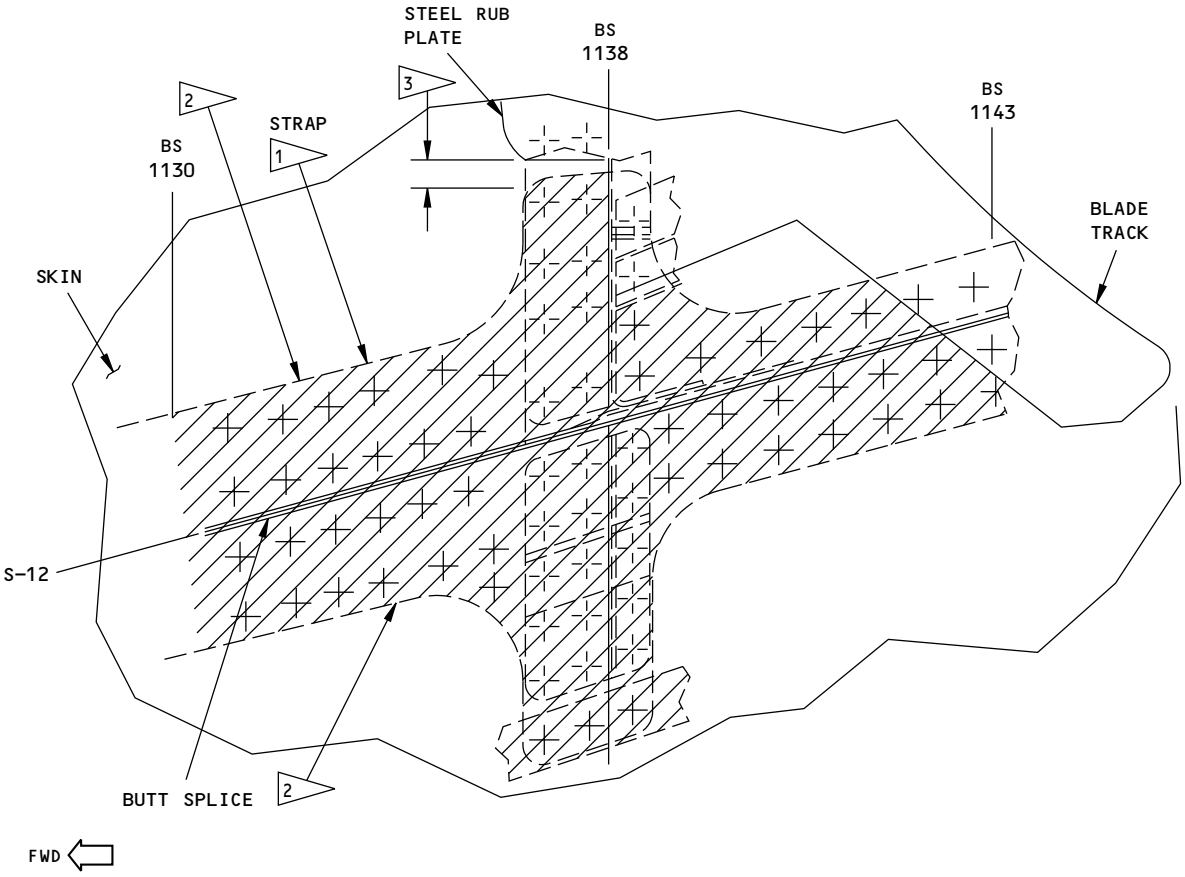

INSPECTION AREA

NOTES

- EXTERNAL VIEW; LEFT SIDE SHOWN, RIGHT SIDE OPPOSITE
- HORIZONTAL STABILIZER NOT SHOWN

1 DO A SCAN OF THE STRAP THROUGH THE SKIN FROM BS 1130 TO BS 1143
- MOVE THE PROBE BETWEEN FASTENERS IN A HORIZONTAL DIRECTION. MOVE THE PROBE IN INCREMENTS OF 0.250 INCH BETWEEN EACH HORIZONTAL SCAN.
- MOVE THE PROBE BETWEEN FASTENERS IN A VERTICAL DIRECTION. MOVE THE PROBE IN INCREMENTS OF 0.250 INCH BETWEEN EACH VERTICAL SCAN.

2 IF THE PROBE GOES ACROSS THE EDGE OF THE STRAP DURING THE SCAN, AN UPSCALE INDICATION WILL OCCUR.

3 DO NOT EXAMINE THE AREA 0.5 INCH BELOW THE STEEL RUB PLATE. THE EDGE OF THE STRAP IS IN THIS AREA.

2159623 S0000471973_V1

Subsurface Inspection of Strap - Stringer S-12
Figure 3

BOEING PROPRIETARY - Copyright © Unpublished Work - See title page for details

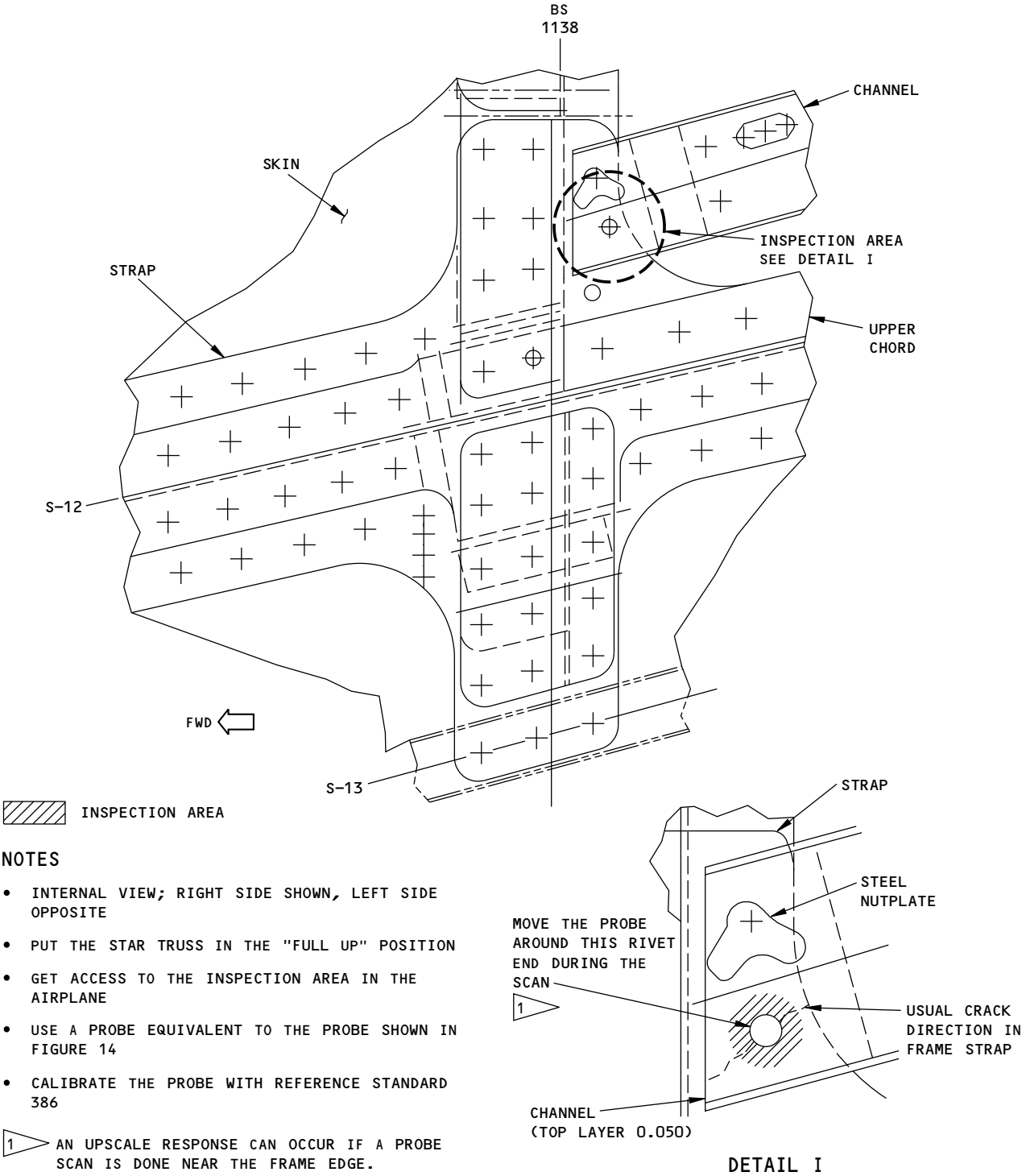

NOTES

- INTERNAL VIEW; RIGHT SIDE SHOWN, LEFT SIDE OPPOSITE
- PUT THE STAR TRUSS IN THE "FULL UP" POSITION
- GET ACCESS TO THE INSPECTION AREA IN THE AIRPLANE
- USE A PROBE EQUIVALENT TO THE PROBE SHOWN IN FIGURE 14
- CALIBRATE THE PROBE WITH REFERENCE STANDARD 386

1 AN UPSCALE RESPONSE CAN OCCUR IF A PROBE SCAN IS DONE NEAR THE FRAME EDGE. COMPARE THIS RESPONSE TO THE NOTCH RESPONSE FROM THE REFERENCE STANDARD.

2159633 S0000471974_V2

Subsurface Inspection of the Vertical Frame Strap through the Channel Aft of BS 1138
Figure 4

BOEING PROPRIETARY - Copyright © Unpublished Work - See title page for details

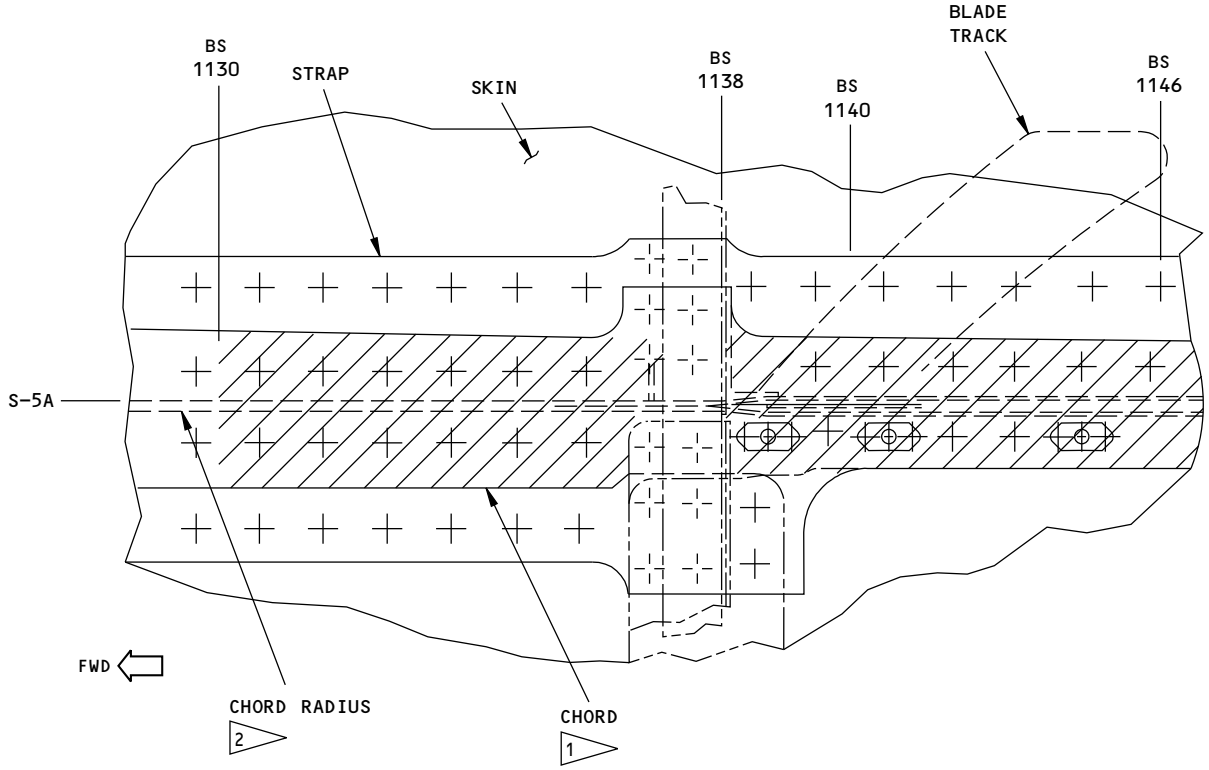

INSPECTION AREA

NOTES

- INTERNAL VIEW; RIGHT SIDE SHOWN, LEFT SIDE OPPOSITE

1 GO INTO THE AIRCRAFT. DO A SURFACE INSPECTION OF THE VERTICAL AND HORIZONTAL CHORD FLANGES FROM BS 1130 TO BS 1146 AS SPECIFIED IN PART 6, 51-00-00, PROCEDURE 4.

2 GO INTO THE AIRCRAFT. DO A SURFACE INSPECTION OF THE CHORD RADII FROM BS 1130 TO BS 1146 AS SPECIFIED IN PART 6, 51-00-00, PROCEDURE 4, FIGURE 11.

2159639 S0000471975_V2

Surface Inspection of Chord Flanges and Chord Radii - Stringer S-5A
Figure 5

BOEING PROPRIETARY - Copyright © Unpublished Work - See title page for details

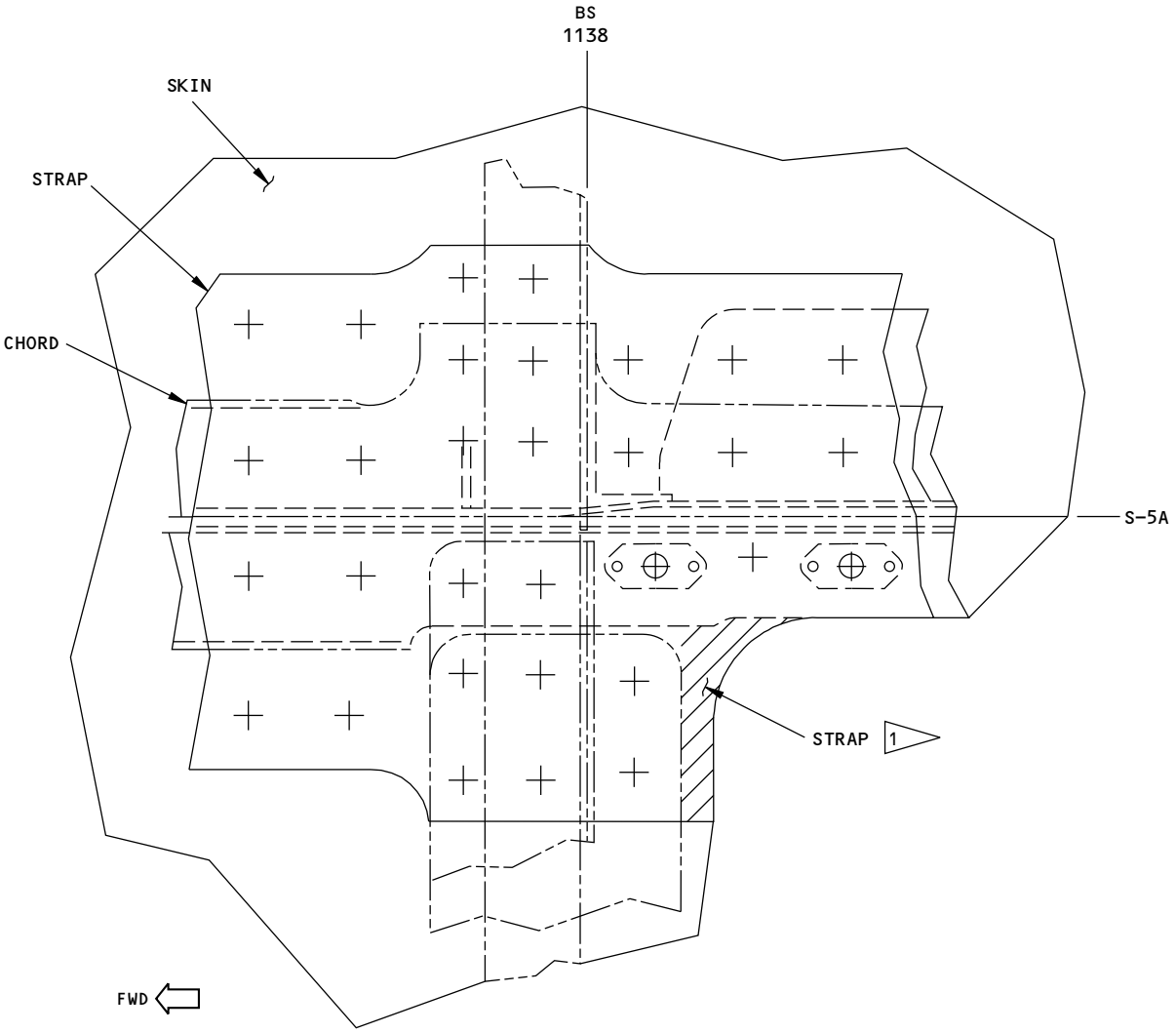

INSPECTION AREA

NOTES

- INTERNAL VIEW; RIGHT SIDE SHOWN, LEFT SIDE OPPOSITE

1 GO INTO THE AIRCRAFT AND DO A SURFACE INSPECTION OF THE STRAP AS SPECIFIED IN PART 6, 51-00-00, PROCEDURE 4.

2159641 S0000471976_V2

Surface Inspection of Strap - Stringer S-5A
Figure 6

BOEING PROPRIETARY - Copyright © Unpublished Work - See title page for details

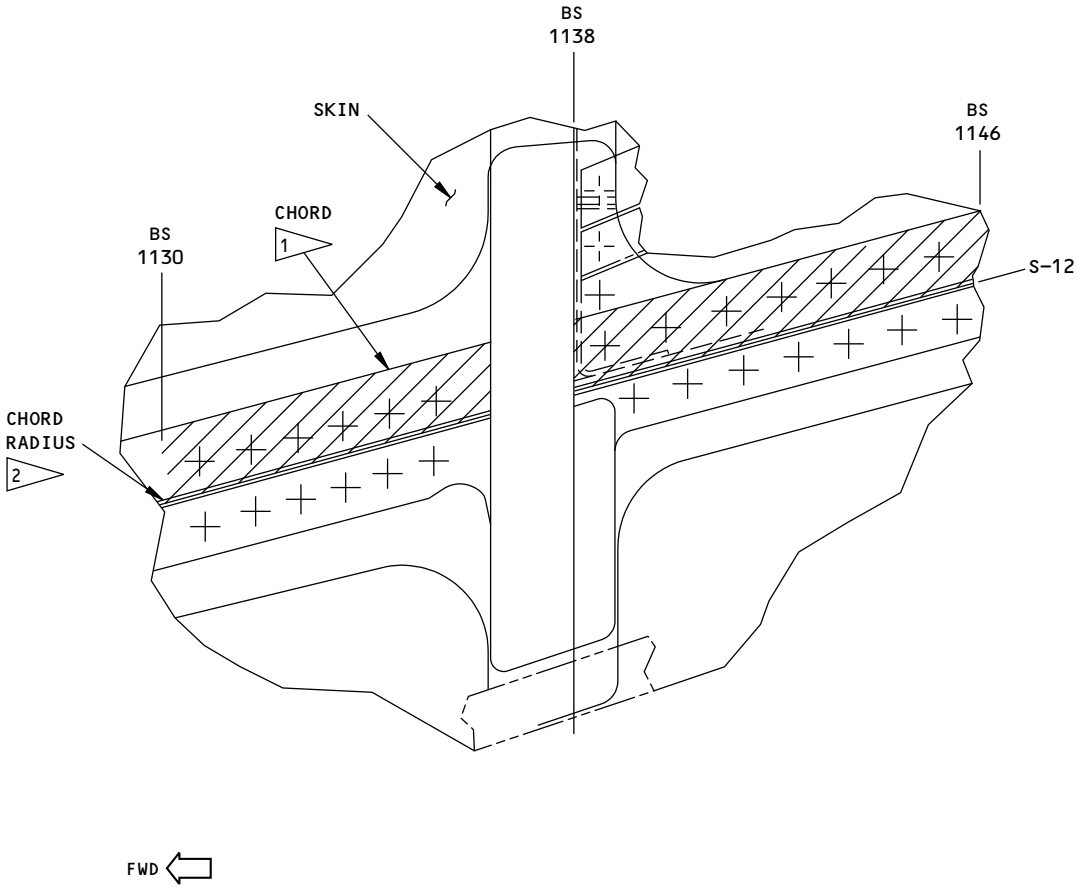

INSPECTION AREA

NOTES

- INTERNAL VIEW; RIGHT SIDE SHOWN, LEFT SIDE OPPOSITE

1 GO INTO THE AIRCRAFT. DO A SURFACE INSPECTION OF THE VERTICAL AND HORIZONTAL FLANGES OF THE UPPER CHORD FROM BS 1130 TO BS 1146 AS SPECIFIED IN PART 6, 51-00-00, PROCEDURE 4.

2 GO INTO THE AIRCRAFT. DO A SURFACE INSPECTION OF THE CHORD RADIUS FROM BS 1130 TO BS 1146 AS SPECIFIED IN PART 6, 51-00-00, PROCEDURE 4, FIGURE 11.

2159644 S0000471977_V2

Surface Inspection of Upper Chord Flanges and Chord Radius - Stringer S-12
Figure 7

BOEING PROPRIETARY - Copyright © Unpublished Work - See title page for details

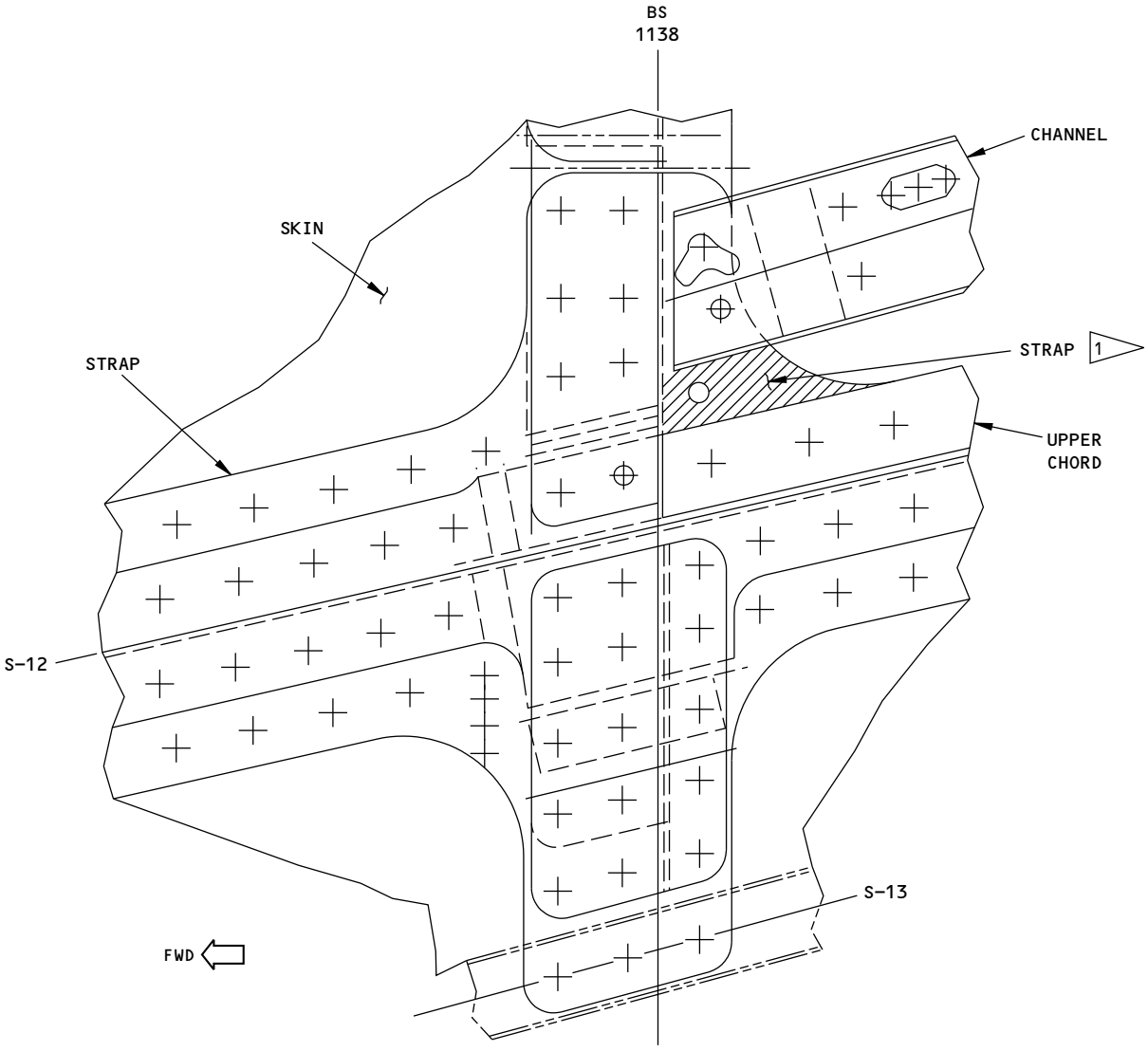

INSPECTION AREA

NOTES

- INTERNAL VIEW; RIGHT SIDE SHOWN, LEFT SIDE OPPOSITE

1 DO A SURFACE INSPECTION AS SPECIFIED IN PART 6, 51-00-00, PROCEDURE 4 OF THE PIECE OF STRAP THAT CAN BE SEEN.

2159645 S0000471978_V2

Surface Inspection of Strap - Stringer S-12
Figure 8

BOEING PROPRIETARY - Copyright © Unpublished Work - See title page for details

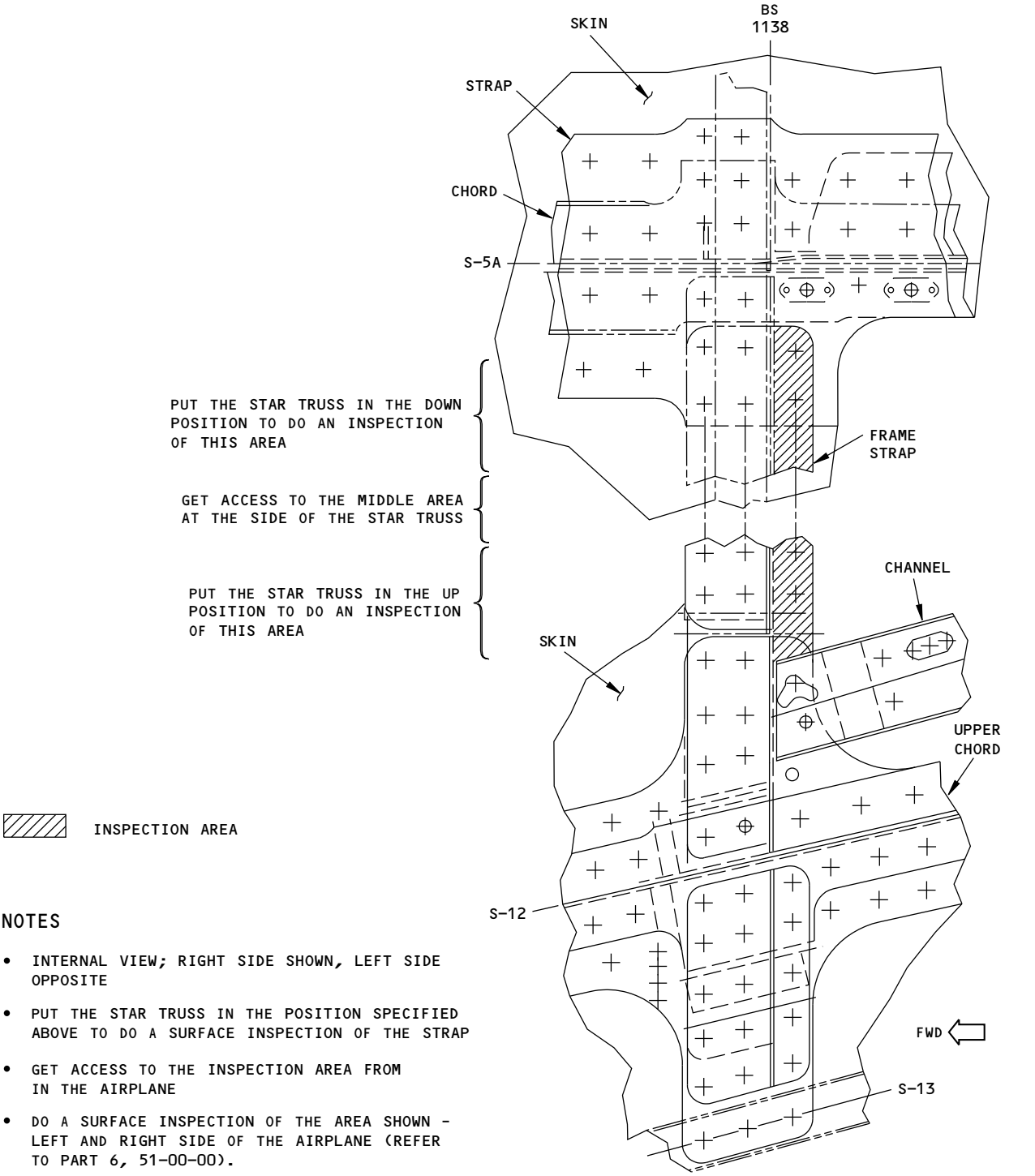

NOTES

- INTERNAL VIEW; RIGHT SIDE SHOWN, LEFT SIDE OPPOSITE
- PUT THE STAR TRUSS IN THE POSITION SPECIFIED ABOVE TO DO A SURFACE INSPECTION OF THE STRAP
- GET ACCESS TO THE INSPECTION AREA FROM IN THE AIRPLANE
- DO A SURFACE INSPECTION OF THE AREA SHOWN - LEFT AND RIGHT SIDE OF THE AIRPLANE (REFER TO PART 6, 51-00-00).

2159651 S0000471979_V1

Surface Inspection of the Frame Strap Aft of BS 1138
Figure 9

BOEING PROPRIETARY - Copyright © Unpublished Work - See title page for details

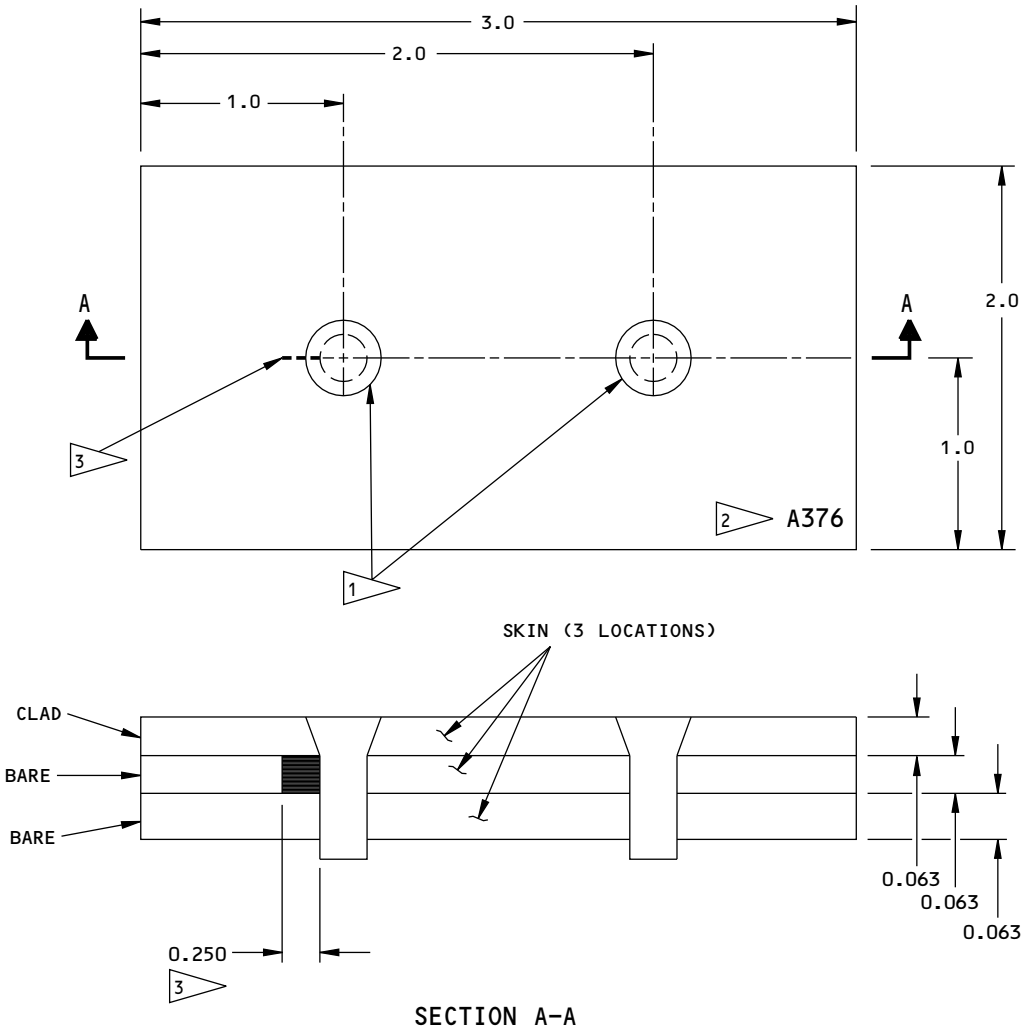

NOTES

- DIMENSIONS ARE IN INCHES
- SKIN DIMENSION TOLERANCE (LENGTH AND WIDTH): ±0.10
- MATERIAL: 2024-T3 OR -T4 ALUMINUM; THE TOP LAYER IS CLAD (SEE SECTION A-A)

1 RIVET BACR15CE6D (2 LOCATIONS). THESE RIVETS MUST HAVE A CONVERSION COATED (ALODINED) FINISH. TO MAKE SURE THE FINISH IS ALODINE, REFER TO PART 1, 51-06-01. INSTALL THE RIVETS AS SPECIFIED IN PART 1, 51-01-04.

2 ETCH OR STAMP REFERENCE STANDARD NUMBER A376. PUT A LETTER "A" IN FRONT OF THE REFERENCE STANDARD NUMBER TO SHOW THAT IT HAS ALODINED RIVETS. SEE FLAGNOTE 1.

3 NOTCH MADE BY AN EDM OR A JEWELERS-SAW CUT 0.250 X 0.063 X 0.010; THE MAXIMUM WIDTH IS 0.030, THE TOLERANCE FOR THE LENGTH IS ±0.010.

2159667 S0000471980_V1

Reference Standard A376
Figure 10

BOEING PROPRIETARY - Copyright © Unpublished Work - See title page for details

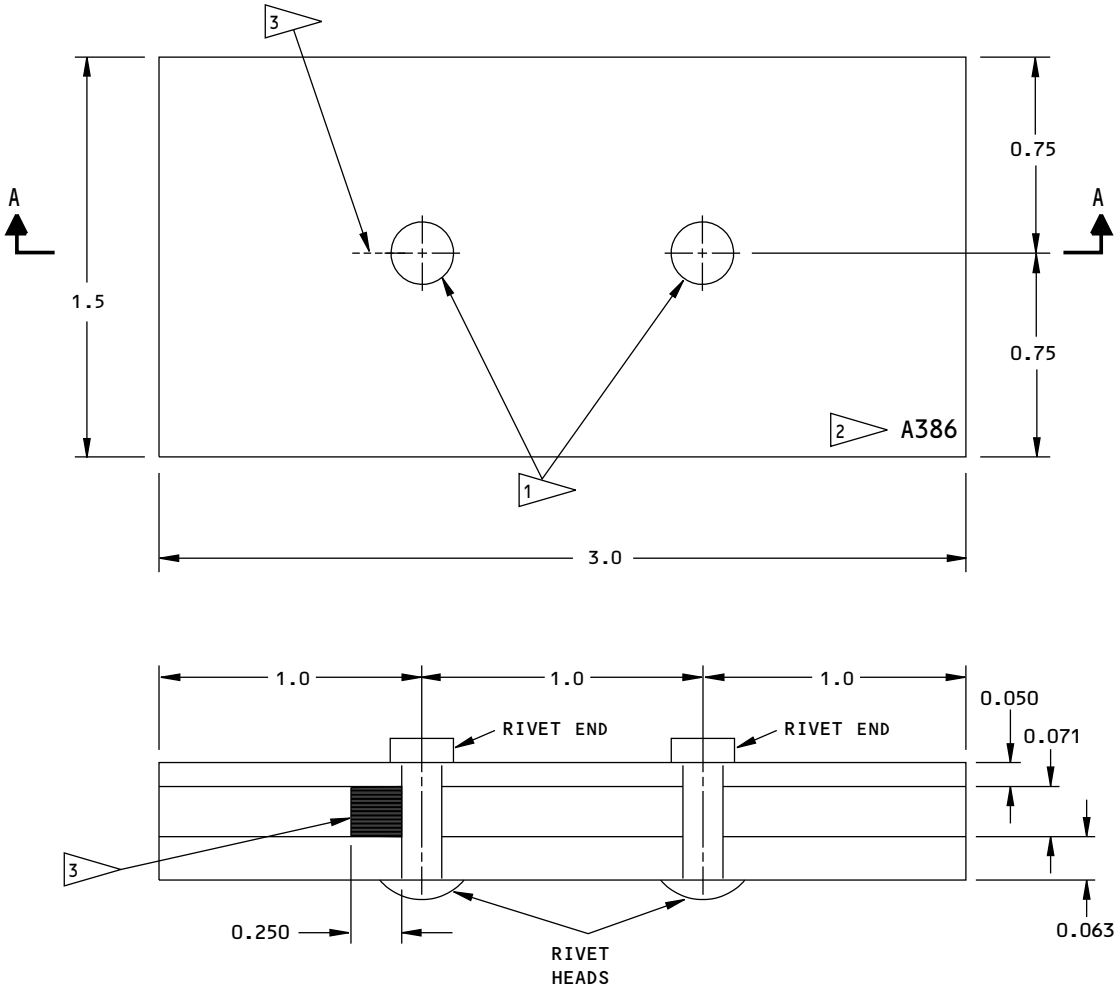

NOTES

- ALL DIMENSIONS ARE IN INCHES
- MATERIAL: 7075 T6 BARE
- SKIN DIMENSION TOLERANCE (LENGTH AND WIDTH) ±0.10
- REFERENCE STANDARD A386 IS USED TO DO A SUBSURFACE INSPECTION OF THE VERTICAL FRAME STRAP. THIS SUBSURFACE INSPECTION IS DONE THROUGH THE CHANNEL IMMEDIATELY ABOVE STRINGER S-12.

1 FASTENERS: 3/16 INCH DIAMETER BACR15BB6* OR EQUIVALENT (RIVET ENDS SHOWN). THESE RIVETS MUST HAVE A CONVERSION COATED (ALODINED) FINISH. TO MAKE SURE THE FINISH IS ALODINE, REFER TO PART 1, 51-06-01. INSTALL THE RIVETS AS SPECIFIED IN PART 1, 51-01-04.

2 ETCH OR STAMP REFERENCE STANDARD NUMBER A386. PUT A LETTER "A" IN FRONT OF THE REFERENCE STANDARD NUMBER TO SHOW THAT IT HAS ALODINED RIVETS. SEE FLAGNOTE 1.

3 NOTCH MADE BY AN EDM OR A JEWELER'S-SAW CUT:
0.250 X 0.071 X 0.010; THE MAXIMUM WIDTH IS 0.030; THE TOLERANCE FOR THE LENGTH OF THE NOTCH IS ±0.010

2159672 S0000471981_V1

Reference Standard A386
Figure 11

BOEING PROPRIETARY - Copyright © Unpublished Work - See title page for details

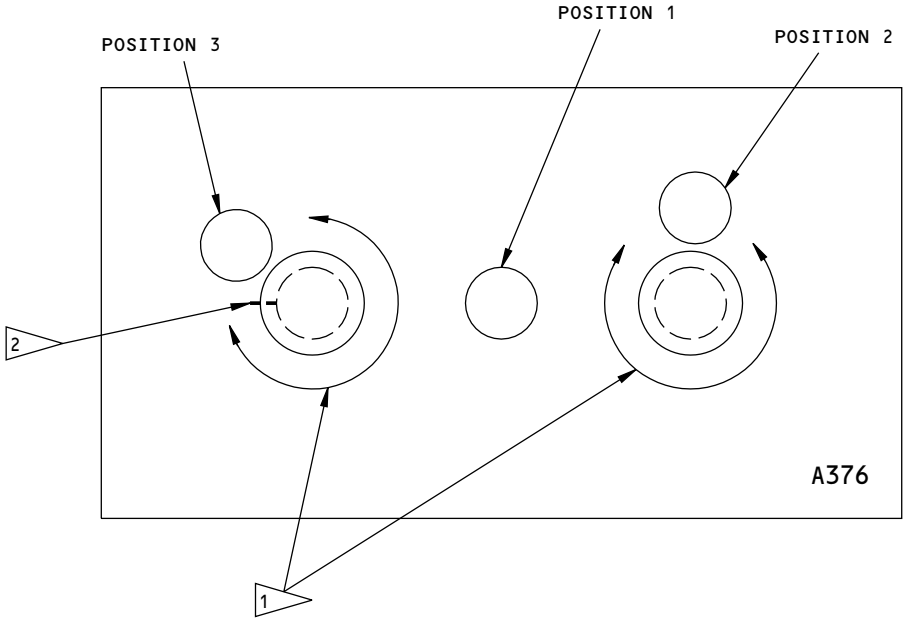

NOTES:

- REFERENCE STANDARD A376 IS USED TO DO THE BEAM STRAP SUBSURFACE INSPECTIONS OF THIS PROCEDURE ONLY.
- REFERENCE STANDARD 126, SHOWN IN PART 6, 51-00-00, PROCEDURE 4, IS USED TO DO THE SURFACE INSPECTIONS OF THIS PROCEDURE.

1 DURING CALIBRATION THE PROBE IS MOVED 360 DEGREES AROUND THE FASTENERS AS SHOWN. FOR THE INSPECTION OF THE STRAP THROUGH THE SKIN OF THE AIRCRAFT THE PROBE IS MOVED IN A HORIZONTAL AND VERTICAL DIRECTION.

2 NOTCH

2159674 S0000471982_V2

Calibration Probe Positions on Reference Standard A376 - Beam Strap Subsurface Inspection
Figure 12

BOEING PROPRIETARY - Copyright © Unpublished Work - See title page for details

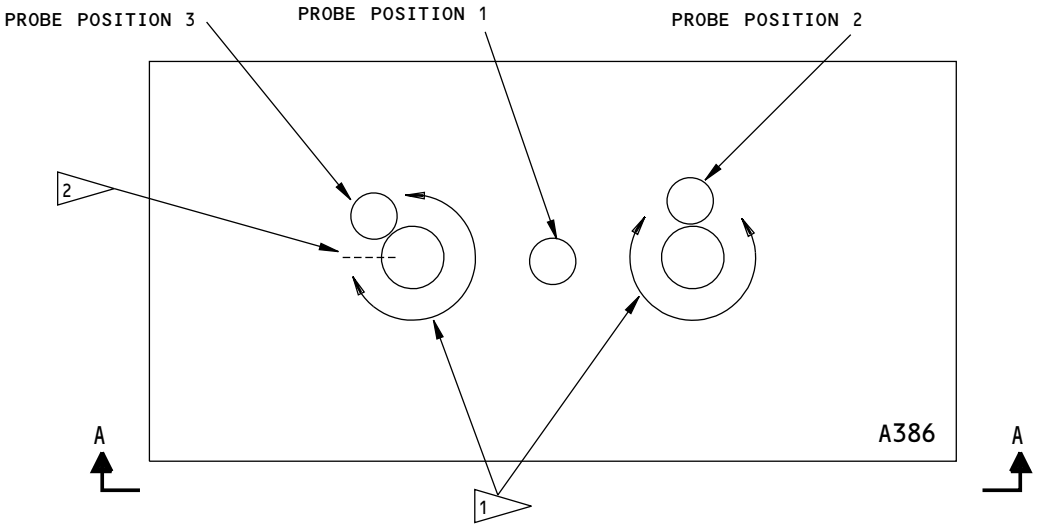

TOP VIEW

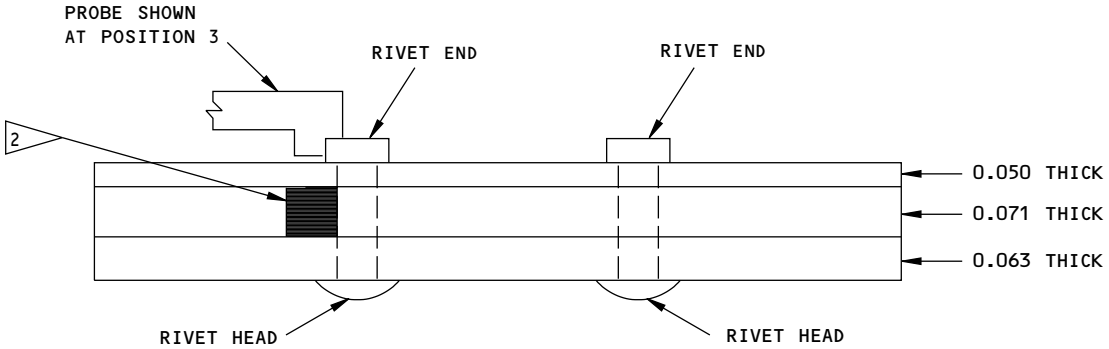

VIEW A-A

NOTES

- REFERENCE STANDARD A386 IS USED FOR THE FRAME STRAP SUBSURFACE INSPECTION
- PUT THE PROBE ON THE 0.050 INCH LAYER OF THE REFERENCE STANDARD

1 DO A PROBE SCAN AROUND THE RIVET ENDS
2 NOTCH

2159677 S0000471983_V1

Calibration Probe Positions on Reference Standard A386 - Frame Strap Subsurface Inspection
Figure 13

BOEING PROPRIETARY - Copyright © Unpublished Work - See title page for details

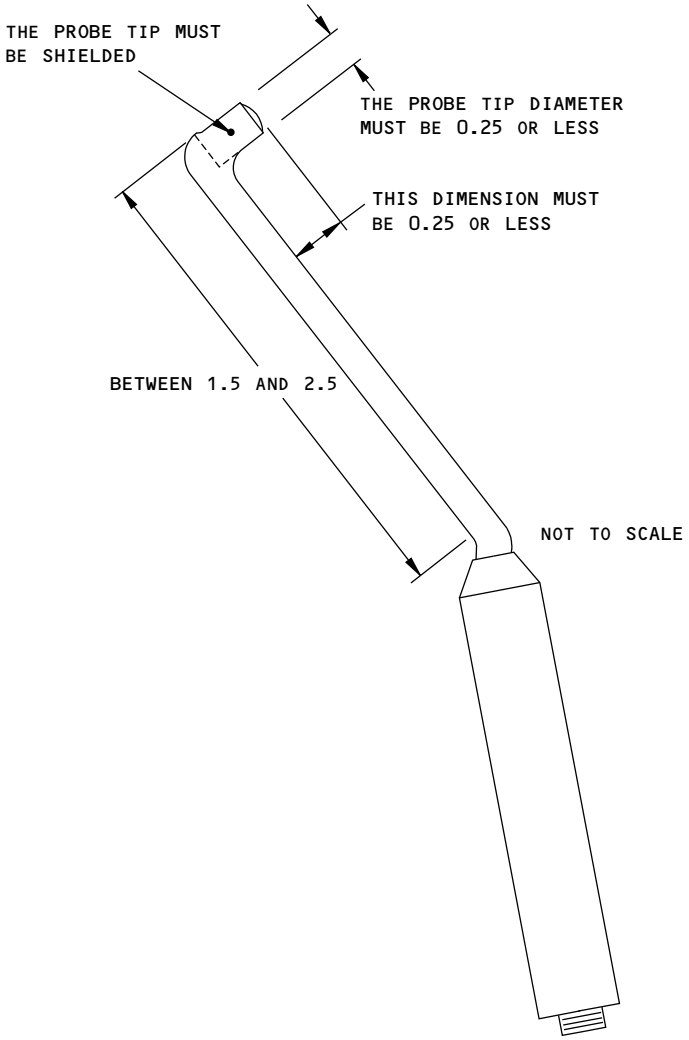

NOTES

- ALL DIMENSIONS ARE IN INCHES
- THE PROBE MUST OPERATE BETWEEN 4KHZ AND 5KHZ
- THE PROBE MUST BE SHIELDED TO DECREASE THE EDGE EFFECT AND TO MAKE SURE THE STEEL NUTPLATE DOES NOT CAUSE UPSCALE SIGNALS
- USE THE PROBE TO DO A SCAN AROUND THE RIVET END SHOWN IN FIGURE 4 (LEFT AND RIGHT SIDES OF THE AIRPLANE)
- THIS PROBE IS NECESSARY TO DO THE INSPECTION OF THE FRAME STRAP ONLY. THE FRAME STRAP INSPECTION IS DONE THROUGH THE CHANNEL ABOVE STRINGER S-12.

2159680 S0000471984_V2

Dimensions for the Angled Subsurface Probe
Figure 14

BOEING PROPRIETARY - Copyright © Unpublished Work - See title page for details

NOSE WHEEL WELL INSPECTION OF STIFFENERS AND DOUBLERS (WITH METER DISPLAY INSTRUMENTS)

1. Purpose

A. This inspection procedure is for instruments with meter display. To do this inspection with instruments that have impedance plane display, use inspection procedure Part 6, 53-10-47.

B. This subsurface eddy-current procedure will find cracks in the stiffeners and doublers in the nose wheel well. The inspection is done from the external side of the airplane. There are two different inspection areas that make it necessary to use two reference standards. The two inspection areas are as follows:

(1) The doubler at Station 268.25 from Water Line 160 to 180. See Figure 1 and Figure 2.

(2) The horizontal stiffeners from Station 251.6 to 259.5 at Water Line 185 and Station 251.6 to 259.5 at Water Line 169.1. See Figure 1 and Figure 3.

C. 737 Supplemental Structural Inspection Document (D6-37089) Reference:

(1) Item: F-49

2. Equipment

NOTE: Refer to Part 1, 51-01-00, for data about the manufacturers of the equipment.

A. Instruments

(1) All eddy-current instruments that have meter display are permitted for use if they:

(a) Can operate at a frequency between 3 and 6 kHz.

(b) Agree with the conditions of this procedure.

(2) The instruments specified below were used to help prepare this procedure:

(a) MIZ 10A; Zetec

(b) MIZ 10B; Zetec

B. Probes

(1) One shielded spot probe is necessary to do the inspection for all of the inspection areas. The probe must operate at a frequency between 3 and 6 kHz. The maximum diameter the probe can be is 0.40 inch (10 mm).

(2) The probes specified below operated satisfactorily when this procedure was made. Other probes can be used if they agree with the conditions of this procedure:

(a) SPO 1284; Nortec/Staveley

(b) SPO 1071; Nortec/Staveley

(c) LP375-3L/15K; NDT Engineering

C. Reference Standards

(1) Reference standard ANDT390A is used to do the subsurface inspection of the doublers. See Figure 4.

(2) Reference standard ANDT390B is used to do the subsurface inspection of the horizontal stiffeners. See Figure 5.

BOEING PROPRIETARY - Copyright © Unpublished Work - See title page for details

3. **Prepare for the Inspection**

A. Prepare for the subsurface inspection of the doublers and stiffeners in the nose wheel well as follows:

(1) Make sure that the instrument, probe, reference standard, and inspection areas are at the same temperature.

(2) Get access to the inspection locations at the external side of the web-side panels in the nose wheel well. See Figure 2 and Figure 3.

(3) Make sure that the web-side panels are clean in the inspection areas at:

(a) Station 268.2 from Water Line 160 to 180 (left and right sides of the airplane).

(b) Station 251.6 to Station 259.5 at Water Line 185 (left and right sides of the airplane).

(c) Station 251.6 to Station 259.5 at Water Line 169.1 (left and right sides of the airplane).

4. **Instrument Calibration**

NOTE: Refer to the equipment instruction manual as necessary for operation instructions.

A. Equipment calibration for the subsurface inspection of the doublers at Station 268.25 from Water Line 160 to 180. See Figure 2.

(1) Set the instrument frequency between 4 and 6 kHz.

(2) Put the probe at probe position 1 on reference standard ANDT390A. See Figure 6.

(3) Balance the instrument.

(4) Set lift-off with the probe at probe position 1. See Figure 6. Set lift-off so that the meter needle moves no more than 5 percent of full scale for probe to part distances of up to 0.006 inch (thickness of two sheets of paper).

(5) Put the probe on reference standard ANDT390A adjacent to the fastener head that does not have a notch adjacent to it. See Figure 6, probe position 2.

(6) Balance the instrument again.

(7) Adjust the meter position control to set the meter needle to 20 percent of full scale.

(8) Put the probe on reference standard ANDT390A adjacent to the fastener head that has a notch adjacent to it. See Figure 6, probe position 3.

(9) Move the probe around this fastener to make a scan. Adjust the instrument sensitivity to get a meter response which is 80 percent of full scale (60 percent of full scale higher than the balance position).

(10) Balance the instrument again and make sure the lift-off is set as specified in Paragraph 4.A.(4).

B. Equipment calibration for the subsurface inspection of the horizontal stiffeners from Station 251.6 to 259.5 at Water Line 185 and Station 251.6 to 259.5 at Water Line 169.1. See Figure 3.

(1) Set the instrument frequency between 3 and 5 kHz.

(2) Put the probe on reference standard ANDT390B at probe position 1. See Figure 6.

(3) Do Paragraph 4.A.(3) thru Paragraph 4.A.(10) with reference standard ANDT390B. See Figure 6.

5. **Inspection Procedure**

A. Inspection procedure for the subsurface inspection of the doublers at Station 268.2 from Water Line 160 to 180 in the nose wheel well.

(1) Calibrate the equipment as specified in Paragraph 4.A.

BOEING PROPRIETARY - Copyright © Unpublished Work - See title page for details

(2) Put the probe on the external web-side panel at Station 268.25 immediately above the horizontal tee at Water Line 161.7. See Figure 2 for this inspection area.

(3) Balance the instrument and adjust the needle to 20 percent on the meter.

(4) Do a scan with the probe between the fasteners shown in Figure 2. Do the scan around the fasteners in an up and down direction and in a forward and aft direction between the fasteners.

NOTE: From Water Line 170 to 180, the probe scan is done around and between the fasteners in the forward row. Do not examine around the aft row of fasteners and nut plates.

(5) Make sure that Paragraph 5.A.(1) thru Paragraph 5.A.(4) are done on the left and right sides of the airplane.

B. Inspection procedure for the subsurface inspection of the stiffeners at Water Line 185 from Station 251.6 to 259.5 and Water Line 169.1 from Station 251.6 to 259.5.

(1) Calibrate the equipment as specified in Paragraph 4.B..

(2) Put the probe on the external web-side panel at Water Line 185 between Station 251.6 and 259.5. See Figure 3 for the inspection area.

(3) Balance the instrument and adjust the needle to 20 percent on the meter.

NOTE: When a scan is done from aluminum fasteners to CRES fasteners, balance the probe again adjacent to the fasteners. If the probe is sufficiently shielded, it will not be necessary to balance the probe again.

(4) Do a scan with the probe between the fasteners shown in Figure 3. Do the probe scan in an up and down direction and in a forward and aft direction between the fasteners.

NOTE: (a) If the probe is moved too far up or down, an upscale indication will occur. This upscale indication will occur when the probe goes over the edge of the horizontal stiffener. See Figure 3 for the stiffener edge locations.

NOTE: (b) Do not do a probe scan above the rectangular filler material at the three places shown in Figure 3. This filler material is between the web-side panels and stiffeners and cannot be seen. A probe scan above this area will give an upscale indication.

(5) Put the probe on the external web-side panel at Water Line 169.1 between Station 251.6 and 259.5 and do Paragraph 5.B.(3) and Paragraph 5.B.(4).

(6) Make sure that Paragraph 5.B.(1) thru Paragraph 5.B.(5) are done on the left and right sides of the airplane.

6. Inspection Results

A. Inspection results for all of the inspection areas:

(1) Upscale indications that are 20 percent or more of full scale higher than the balance position are possible crack indications. Upscale crack indications occur during a short scan. Compare all upscale indications to the upscale indication from the reference notch on the reference standard.

NOTE: A slow upscale indication can be caused by a large separation between the layers. This type of indication shows on the meter during a long scan. Compare these indications to the reference notch indications that show quickly on the meter during a short scan.

BOEING PROPRIETARY - Copyright © Unpublished Work - See title page for details

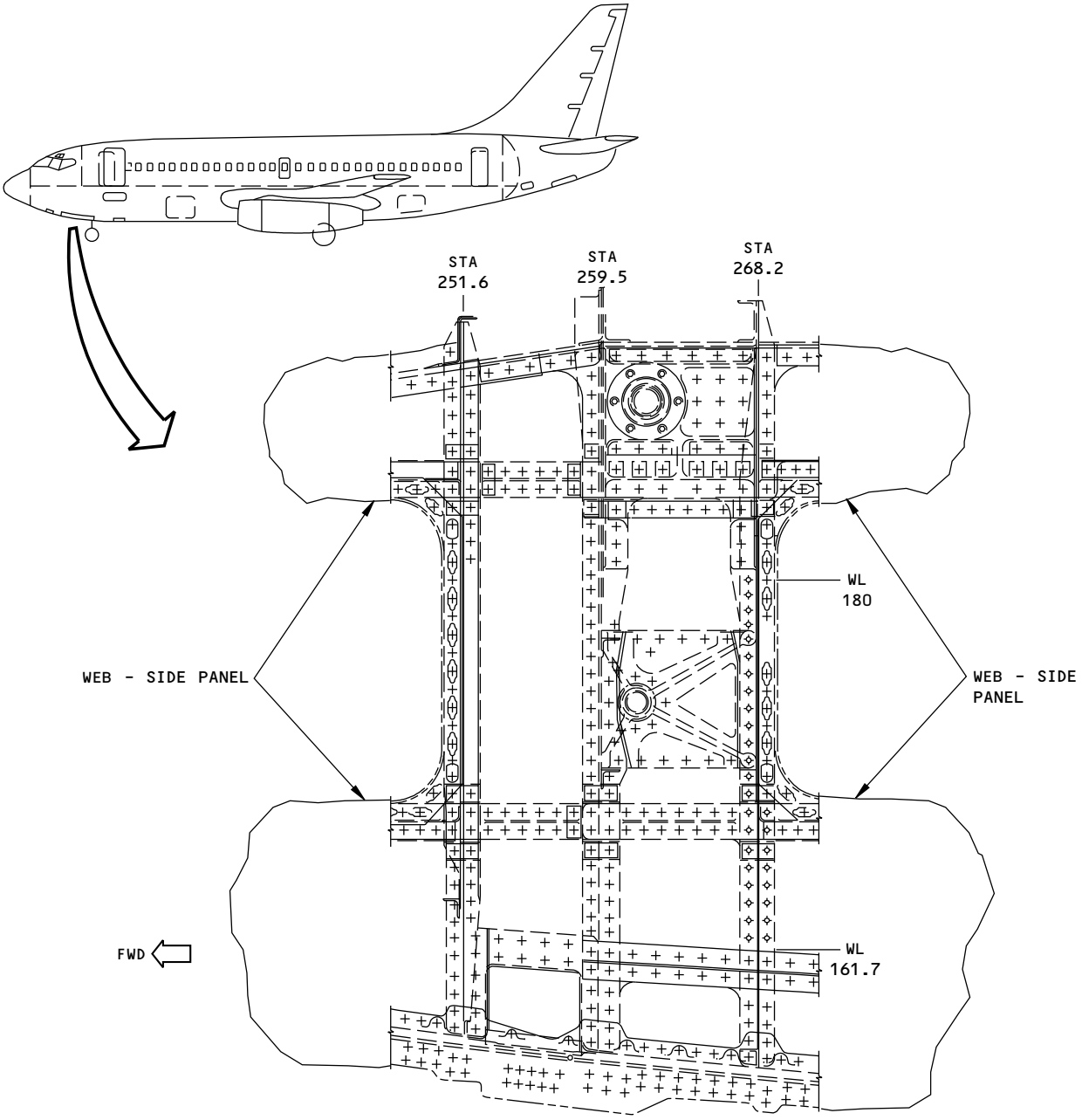

VIEW OF THE RIGHT SIDE OF THE NOSE WHEEL WELL
AS YOU STAND IN THE NOSE WHEEL WELL
(RIGHT SIDE SHOWN AT BL 16.0)

NOTE

- THE INVISIBLE/BROKEN LINES ARE BEHIND THE WEB - SIDE PANEL

2159689 S0000471986_V1

Nose Wheel Well Inspection of Stiffeners and Doublers
Figure 1

BOEING PROPRIETARY - Copyright © Unpublished Work - See title page for details

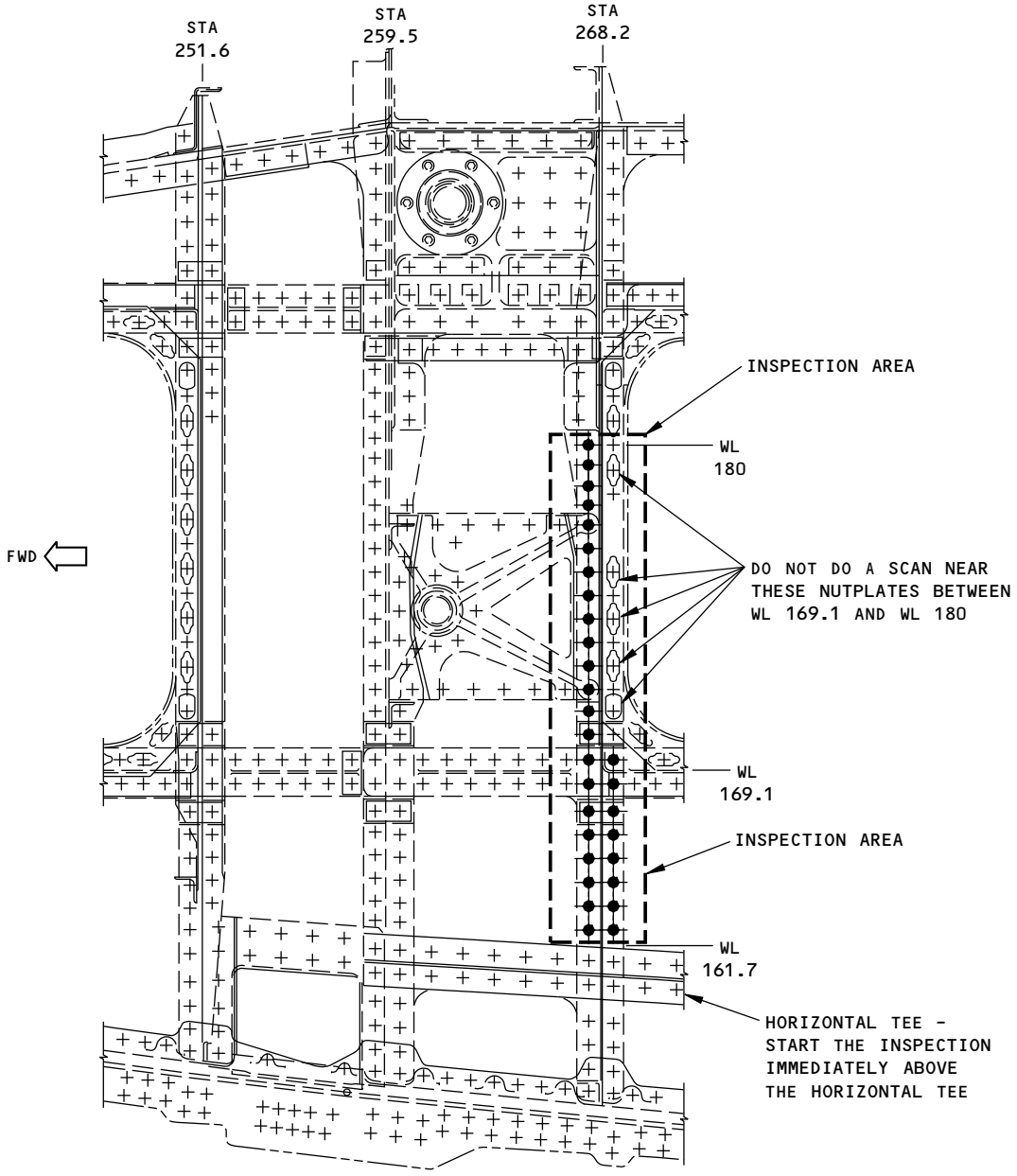

VIEW OF THE RIGHT SIDE OF THE NOSE WHEEL WELL
AS YOU STAND IN THE NOSE WHEEL WELL
(RIGHT SIDE SHOWN AT BL 16.0)

NOTES

- USE REFERENCE STANDARD NDT390A FOR CALIBRATION.
- DO AN INSPECTION AROUND THESE FASTENERS ✦.
- THE INVISIBLE/BROKEN LINES ARE BEHIND THE WEB - SIDE PANEL.

2159691 S0000471987_V1

Inspection of Doublers at Station 268.2 from WL 161.7 to WL 180
Figure 2

BOEING PROPRIETARY - Copyright © Unpublished Work - See title page for details

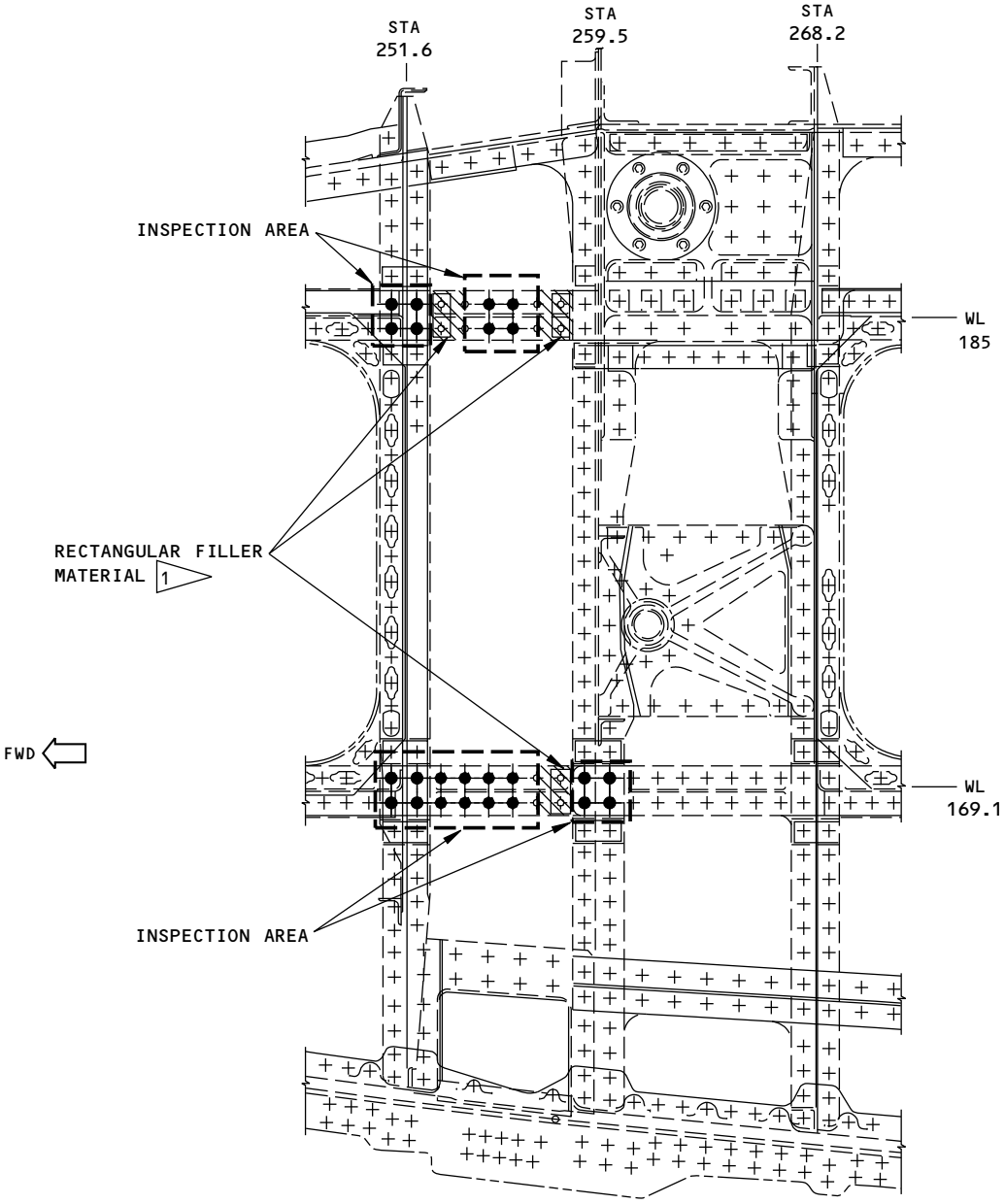

VIEW OF THE RIGHT SIDE OF THE NOSE WHEEL WELL
AS YOU STAND IN THE NOSE WHEEL WELL
(RIGHT SIDE SHOWN AT BL 16.0)

NOTES

- USE REFERENCE STANDARD NDT390B FOR CALIBRATION.
- DO AN INSPECTION BETWEEN THESE FASTENERS ✦.
- THE INVISIBLE/BROKEN LINES ARE BEHIND THE WEB - SIDE PANEL.

1 DO NOT DO A PROBE SCAN AT THESE THREE AREAS. A CRACK-LIKE INDICATION WILL OCCUR FROM THE RECTANGULAR FILLER MATERIAL THAT IS BETWEEN THE SKIN AND THE STIFFENERS.

2159695 S0000471988_V1

Inspection of the Horizontal Stiffeners from Station 251.6 to 259.5 at WL 169.1 and WL 185
Figure 3

BOEING PROPRIETARY - Copyright © Unpublished Work - See title page for details

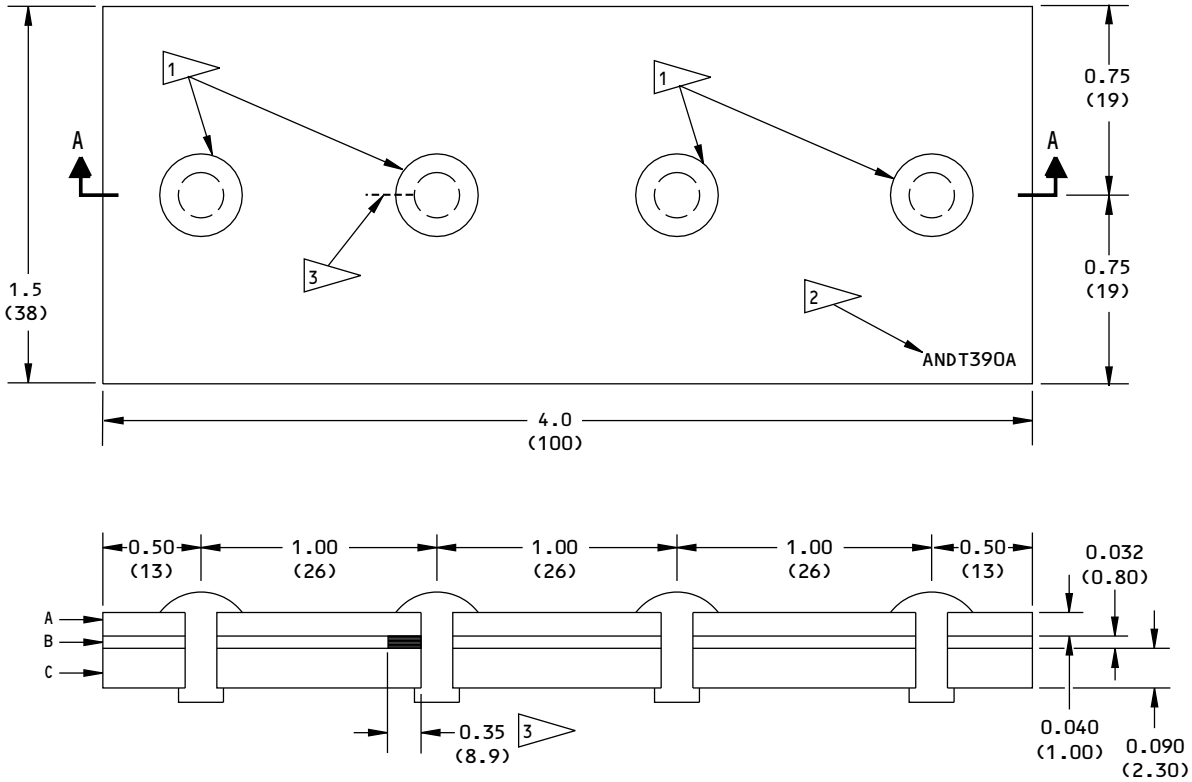

SECTION A-A
(NOT TO SCALE)

NOTES:

- ALL DIMENSIONS ARE IN INCHES (MILLIMETERS IN PARENTHESES)
- DIMENSION TOLERANCE:

INCHES	MILLIMETERS
X.XXX = ±0.005	X.XX = ±0.1mm
X.XX = ±0.025	X.X = ±0.5mm
X.X = ±0.050	X = ±1mm

- MATERIAL:
  (A) 2024-T3; 0.040 (1.00) THICK, CLAD OR BARE
  (B) 2024-T3; 0.032 (0.80) THICK, CLAD OR BARE
  (A) 7075-T6; 0.090 (2.30) THICK, CLAD OR BARE

1 FASTENERS: BACR15BB6* * ALUMINUM RIVETS; QUANTITY 4. THESE RIVETS MUST HAVE A CONVERSION COATED (ALODINED) FINISH. TO MAKE SURE THE FINISH IS ALODINE, REFER TO PART 1, 51-06-01. INSTALL THE RIVETS AS SPECIFIED IN PART 1, 51-01-04.

2 ETCH OR STAMP PART NUMBER ANDT390A. PUT A LETTER "A" IN FRONT OF THE REFERENCE STANDARD NUMBER TO SHOW THAT IT HAS ALODINED RIVETS. SEE FLAGNOTE 1.

3 EDM NOTCH OR JEWELER'S SAWCUT:
LENGTH: 0.35 (8.9)
DEPTH: 0.032 (0.80)
MAXIMUM WIDTH: 0.025 (0.63)

2159698 S0000471989_V1

Reference Standard ANDT390A (for the Subsurface Inspection of the Doublers)
Figure 4

BOEING PROPRIETARY - Copyright © Unpublished Work - See title page for details

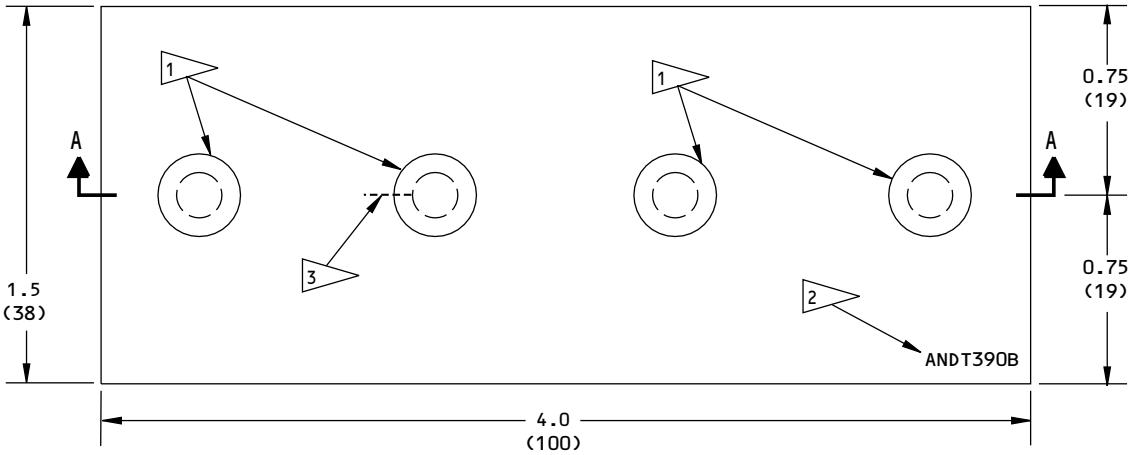

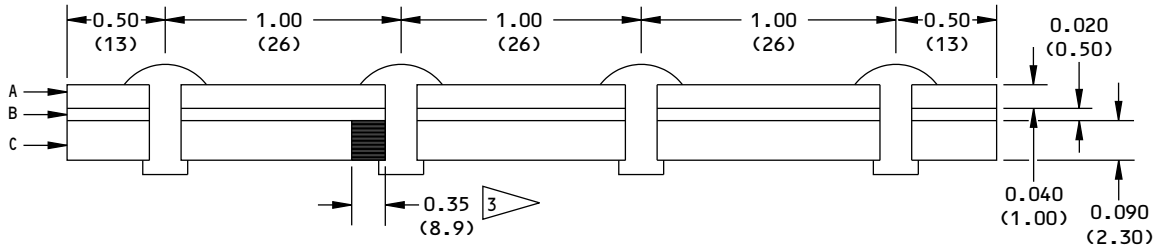

SECTION A-A
(NOT TO SCALE)

NOTES:

- ALL DIMENSIONS ARE IN INCHES (MILLIMETERS IN PARENTHESES)
- DIMENSION TOLERANCE:

INCHES	MILLIMETERS
X.XXX = ±0.005	X.XX = ±0.1mm
X.XX = ±0.025	X.X = ±0.5mm
X.X = ±0.050	X = ±1mm

- MATERIAL:
  (A) 2024-T3; 0.040 (1.00) THICK, CLAD OR BARE
  (B) 2024-T3; 0.020 (0.50) THICK, CLAD OR BARE
  (A) 7075-T6; 0.090 (2.30) THICK, CLAD OR BARE

1 FASTENERS: BACR15BB6* * ALUMINUM RIVETS; QUANTITY 4. THESE RIVETS MUST HAVE A CONVERSION COATED (ALODINED) FINISH. TO MAKE SURE THE FINISH IS ALODINE, REFER TO PART 1, 51-06-01. INSTALL THE RIVETS AS SPECIFIED IN PART 1, 51-01-04.

2 ETCH OR STAMP PART NUMBER ANDT390B. PUT A LETTER "A" IN FRONT OF THE REFERENCE STANDARD NUMBER TO SHOW THAT IT HAS ALODINED RIVETS. SEE FLAGNOTE 1.

3 EDM NOTCH OR JEWELER'S SAWCUT:
LENGTH: 0.35 (8.9)
DEPTH: 0.090 (2.30)
MAXIMUM WIDTH: 0.025 (0.63)

2159701 S0000471990_V1

Reference Standard ANDT390B (for the Subsurface Inspection of the Horizontal Stiffeners)
Figure 5

BOEING PROPRIETARY - Copyright © Unpublished Work - See title page for details

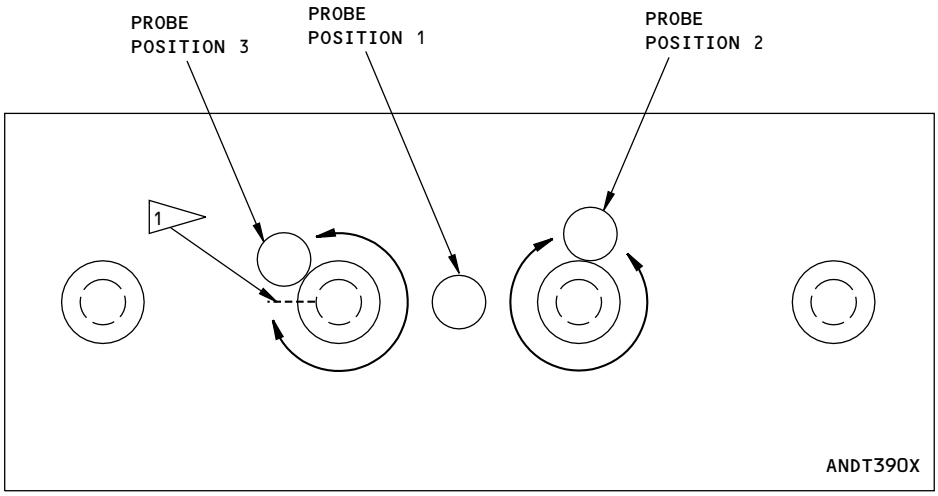

NOTES:

- THE PROBE POSITIONS AND SCANS SHOWN ABOVE ARE THE SAME ON REFERENCE STANDARDS ANDT390A AND ANDT390B.

1 REFERENCE NOTCH OR SAWCUT

2159704 S0000471991_V1

Calibration Probe Positions on Reference Standards ANDT390A and ANDT390B
Figure 6

BOEING PROPRIETARY - Copyright © Unpublished Work - See title page for details

NOSE WHEEL WELL INSPECTION OF STIFFENERS AND DOUBLERS (WITH IMPEDANCE PLANE INSTRUMENTS)

1. Purpose

A. This inspection procedure is for instruments with impedance plane display. To do this inspection with instruments that have meter display, use inspection procedure Part 6, 53-10-46.

B. This subsurface eddy-current procedure will find cracks in the stiffeners and doublers in the nose wheel well. The inspection is done from the external side of the airplane. There are two different inspection areas that make it necessary to use two reference standards. The two inspection areas are as follows:

(1) The doubler at Station 268.25 from Water Line 160 to 180. See Figure 1 and Figure 2.

(2) The horizontal stiffeners from Station 251.6 to 259.5 at Water Line 185 and Station 251.6 to 259.5 at Water Line 169.1. See Figure 1 and Figure 3.

C. 737 Supplemental Structural Inspection Document (D6-37089) Reference:

(1) Item: F-49

2. Equipment

NOTE: Refer to Part 1, 51-01-00, for data about the manufacturers of the equipment.

A. Instruments

(1) All eddy-current instruments that have impedance plane display are permitted for use if they:

(a) Can operate at a frequency between 3 and 6 kHz.

(b) Agree with the conditions of this procedure. The instruments specified below were used to help prepare this procedure:

1) NDT 19; Nortec/Staveley

2) AV100; Hocking/Krautkramer

3) MIZ 20A; Zetec

B. Probes

(1) One shielded spot probe is necessary to do the inspection for all of the inspection areas. The probe must operate at a frequency between 3 and 6 kHz. The maximum diameter the probe can be is 0.40 inch (10 mm).

(2) The probes specified below operated satisfactorily when this procedure was made. Other probes can be used if they agree with the conditions of this procedure:

(a) SPO 1284; Nortec/Staveley

(b) SPO 1071; Nortec/Staveley

(c) LP375-3L/15K; NDT Engineering

C. Reference Standards

(1) Reference standard ANDT390A is used to do the subsurface inspection of the doublers. See Figure 4.

(2) Reference standard ANDT390B is used to do the subsurface inspection of the horizontal stiffeners. See Figure 5.

BOEING PROPRIETARY - Copyright © Unpublished Work - See title page for details

3. **Prepare for the Inspection**

A. Prepare for the subsurface inspection of the doublers and stiffeners in the nose wheel well as follows:

(1) Make sure that the instrument, probe, reference standard, and inspection areas are at the same temperature.

(2) Get access to the inspection locations at the external side of the web-side panels in the nose wheel well. See Figure 2 and Figure 3.

(3) Make sure that the web-side panels are clean in the inspection areas at:

(a) Station 268.2 from Water Line 160 to 180 (left and right sides of the airplane).

(b) Station 251.6 to Station 259.5 at Water Line 185 (left and right sides of the airplane).

(c) Station 251.6 to Station 259.5 at Water Line 169.1 (left and right sides of the airplane).

4. **Instrument Calibration**

NOTE: Refer to the equipment instructions manual as necessary for operation instructions.

A. Equipment calibration for the subsurface inspection of the doublers at Station 268.25 from Water Line 160 to 180. See Figure 2.

(1) Set the instrument frequency between 4 and 6 kHz.

(2) Put the probe at probe position 1 on reference standard ANDT390A. See Figure 6.

(3) Balance the instrument.

(4) Set lift-off with the probe at probe position 1 so that the signal goes horizontally to the left.

(5) Put the probe on reference standard ANDT390A adjacent to the fastener head that does not have a notch adjacent to it. See Figure 6, probe position 2.

(6) Balance the instrument again.

(7) Adjust the position of the balanced signal so that it is at 20 percent of full screen height.

(8) Put the probe on reference standard ANDT390A adjacent to the fastener head that has a notch adjacent to it. See Figure 6, probe position 3.

(9) Move the probe around this fastener to make a scan. Adjust the instrument sensitivity to get a vertical indication that is 80 percent of full screen height (60 percent of full screen height higher than the balance position).

(10) Balance the instrument again and make sure the lift-off signal moves horizontally to the left.

B. Equipment calibration for the subsurface inspection of the horizontal stiffeners from Station 251.6 to 259.5 at Water Line 185 and Station 251.6 to 259.5 at Water Line 169.1. See Figure 3.

(1) Set the instrument frequency between 3 and 5 kHz.

(2) Put the probe on reference standard ANDT390B at probe position 1. See Figure 6.

(3) Do Paragraph 4.A.(3) thru Paragraph 4.A.(10) with reference standard ANDT390B. See Figure 6.

5. **Inspection Procedure**

A. Inspection procedure for the subsurface inspection of the doublers at Station 268.2 from Water Line 160 to 180 in the nose wheel well.

(1) Calibrate the equipment as specified in Paragraph 4.A.

BOEING PROPRIETARY - Copyright © Unpublished Work - See title page for details

(2) Put the probe on the external web-side panel at Station 268.25 immediately above the horizontal tee at Water Line 161.7. See Figure 2 for this inspection area.

(3) Balance the instrument and adjust the signal position so that it is at 20 percent full-screen height.

(4) Do a scan with the probe between the fasteners shown in Figure 2. Do the scan around the fasteners in an up and down direction and in a forward and aft direction between the fasteners.

NOTE: From Water Line 170 to 180, the probe scan is done around and between the fasteners in the forward row. Do not examine around the aft row of fasteners and nut plates.

(5) Make sure that Paragraph 5.A.(1) thru Paragraph 5.A.(4) are done on the left and right sides of the airplane.

B. Inspection procedure for the subsurface inspection of the stiffeners at Water Line 185 from Station 251.6 to 259.5 and Water Line 169.1 from Station 251.6 to 259.5.

(1) Calibrate the equipment as specified in Paragraph 4.B.

(2) Put the probe on the external web-side panel at Water Line 185 between Station 251.6 and 259.5. See Figure 3 for the inspection area.

(3) Balance the instrument and adjust the signal position so that it is at 20 percent of full screen height.

NOTE: When a scan is done from aluminum fasteners to CRES fasteners, balance the probe again adjacent to the fasteners. If the probe is sufficiently shielded, it will not be necessary to balance the probe again.

(4) Do a scan with the probe between the fasteners shown in Figure 3. Do the probe scan in an up and down direction around the fasteners and in a forward and aft direction between the fasteners.

NOTE: (1) If the probe is moved too far up or down, a vertical indication will occur. This vertical indication will occur when the probe goes over the edge of the horizontal stiffener. See Figure 3 for the stiffener edge locations.

NOTE: (2) Do not do a probe scan above the rectangular filler material at the three places shown in Figure 3. This filler material is between the web-side panels and stiffeners and cannot be seen. A probe scan above this area will give an upscale indication.

(5) Put the probe on the external web-side panel at Water Line 169.1 between Station 251.6 and 259.5 and do Paragraph 5.B.(3) and Paragraph 5.B.(4).

(6) Make sure that Paragraph 5.B.(1) thru Paragraph 5.B.(5) are done on the left and right sides of the airplane.

6. Inspection Results

A. Inspection results for all of the inspection areas:

(1) Vertical indications that are 20 percent or more higher than the balance position are possible crack indications. Vertical crack indications occur during a short scan. Compare all vertical indications to the vertical indication from the reference notch on the reference standard.

NOTE: A slow vertical indication can be caused by a large separation between the layers. This type of indication shows on the impedance plane screen during a long scan. Compare these indications to the reference notch indications that show quickly on the screen during a short scan.

BOEING PROPRIETARY - Copyright © Unpublished Work - See title page for details

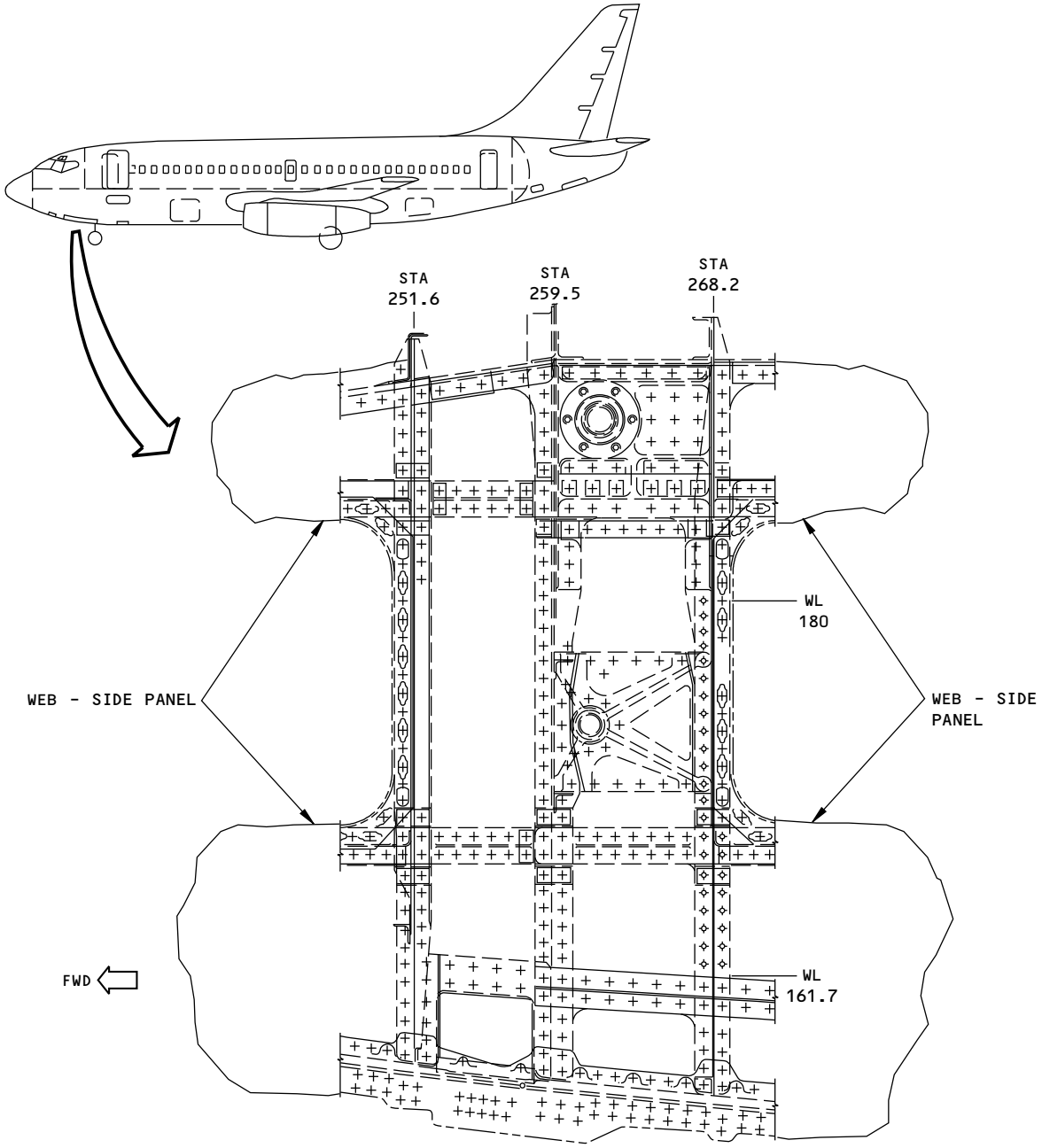

VIEW OF THE RIGHT SIDE OF THE NOSE WHEEL WELL
AS YOU STAND IN THE NOSE WHEEL WELL
(RIGHT SIDE SHOWN AT BL 16.0)

NOTE

- THE INVISIBLE/BROKEN LINES ARE BEHIND THE WEB - SIDE PANEL.

2159713 S0000472112_V1

Nose Wheel Well Inspection of Stiffeners and Doublers
Figure 1

BOEING PROPRIETARY - Copyright © Unpublished Work - See title page for details

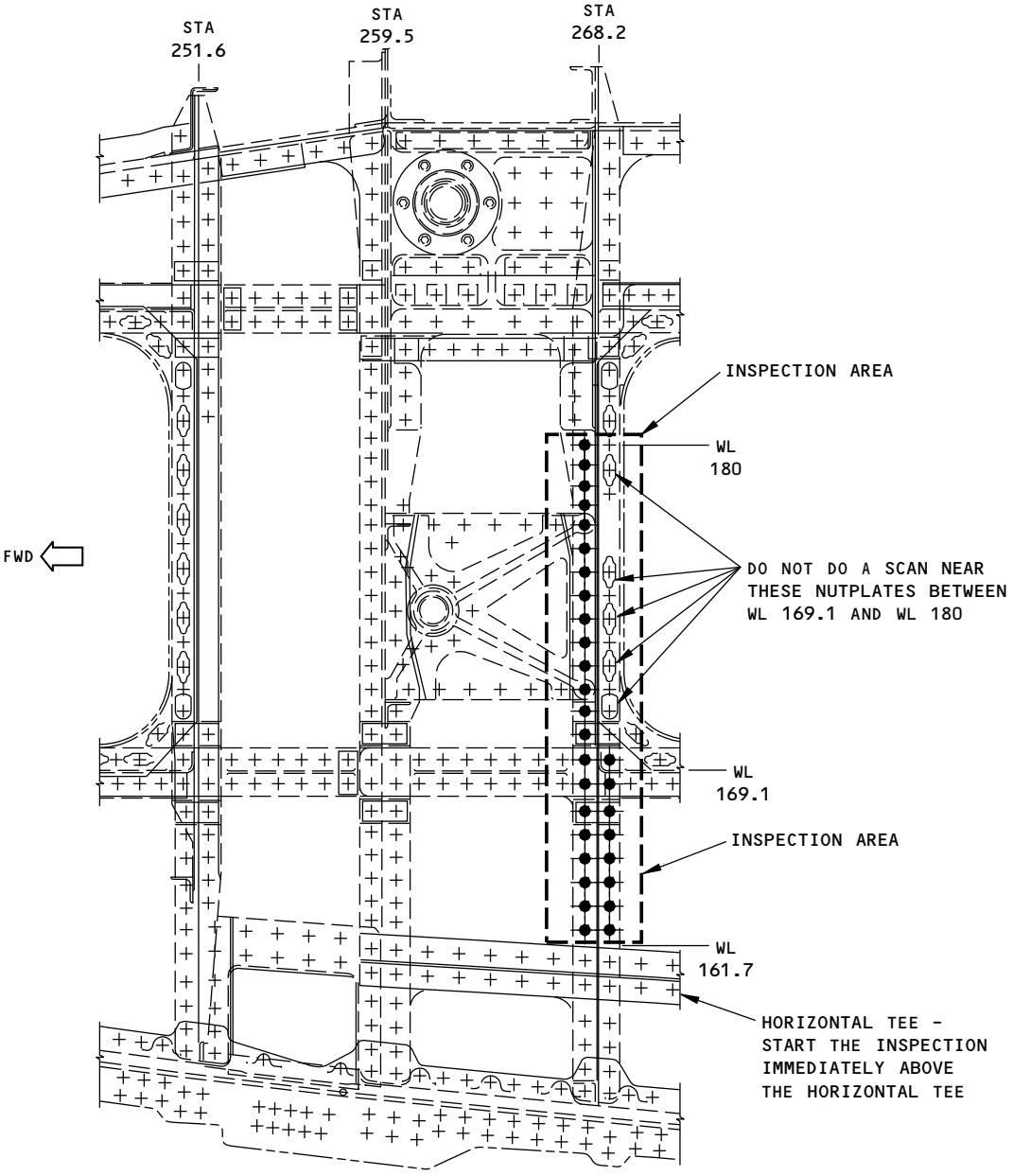

VIEW OF THE RIGHT SIDE OF THE NOSE WHEEL WELL
AS YOU STAND IN THE NOSE WHEEL WELL
(RIGHT SIDE SHOWN AT BL 16.0)

NOTES

- USE REFERENCE STANDARD NDT390A FOR CALIBRATION.
- DO AN INSPECTION AROUND THESE FASTENERS ✦.
- THE INVISIBLE/BROKEN LINES ARE BEHIND THE WEB - SIDE PANEL.

2159725 S0000472113_V1

Inspection of Doublers at Station 268.2 from WL 161.7 to WL 180
Figure 2

BOEING PROPRIETARY - Copyright © Unpublished Work - See title page for details

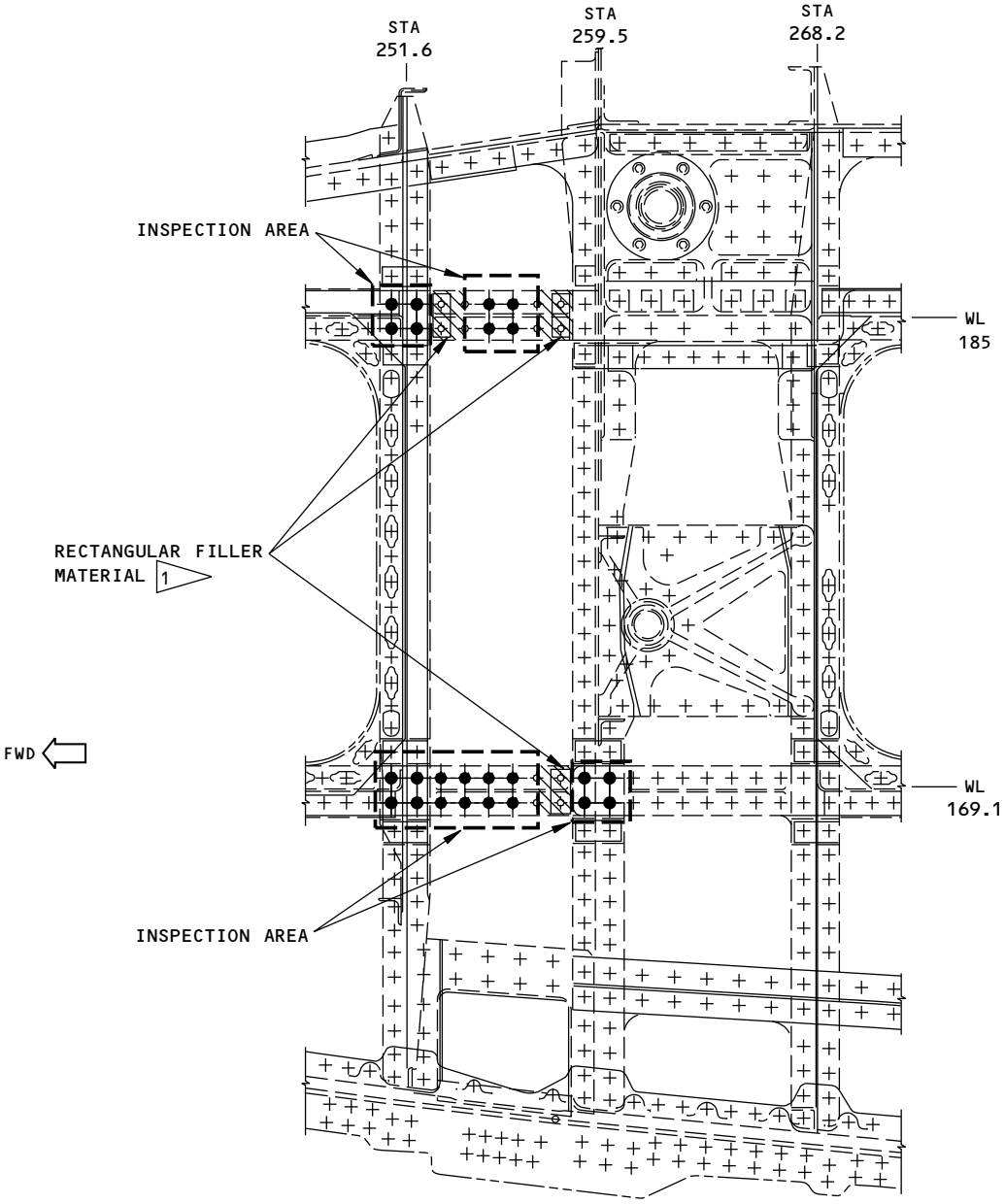

VIEW OF THE RIGHT SIDE OF THE NOSE WHEEL WELL
AS YOU STAND IN THE NOSE WHEEL WELL
(RIGHT SIDE SHOWN AT BL 16.0)

NOTES

- USE REFERENCE STANDARD NDT390B FOR CALIBRATION.
- DO AN INSPECTION BETWEEN THESE FASTENERS ✚.
- THE INVISIBLE/BROKEN LINES ARE BEHIND THE WEB - SIDE PANEL.

1 DO NOT DO A PROBE SCAN AT THESE THREE AREAS. A CRACK-LIKE INDICATION WILL OCCUR FROM THE RECTANGULAR FILLER MATERIAL THAT IS BETWEEN THE SKIN AND THE STIFFENERS.

2159727 S0000472114_V1

Inspection of the Horizontal Stiffeners from Station 251.6 to 259.5 at WL 169.1 and WL 185
Figure 3

BOEING PROPRIETARY - Copyright © Unpublished Work - See title page for details

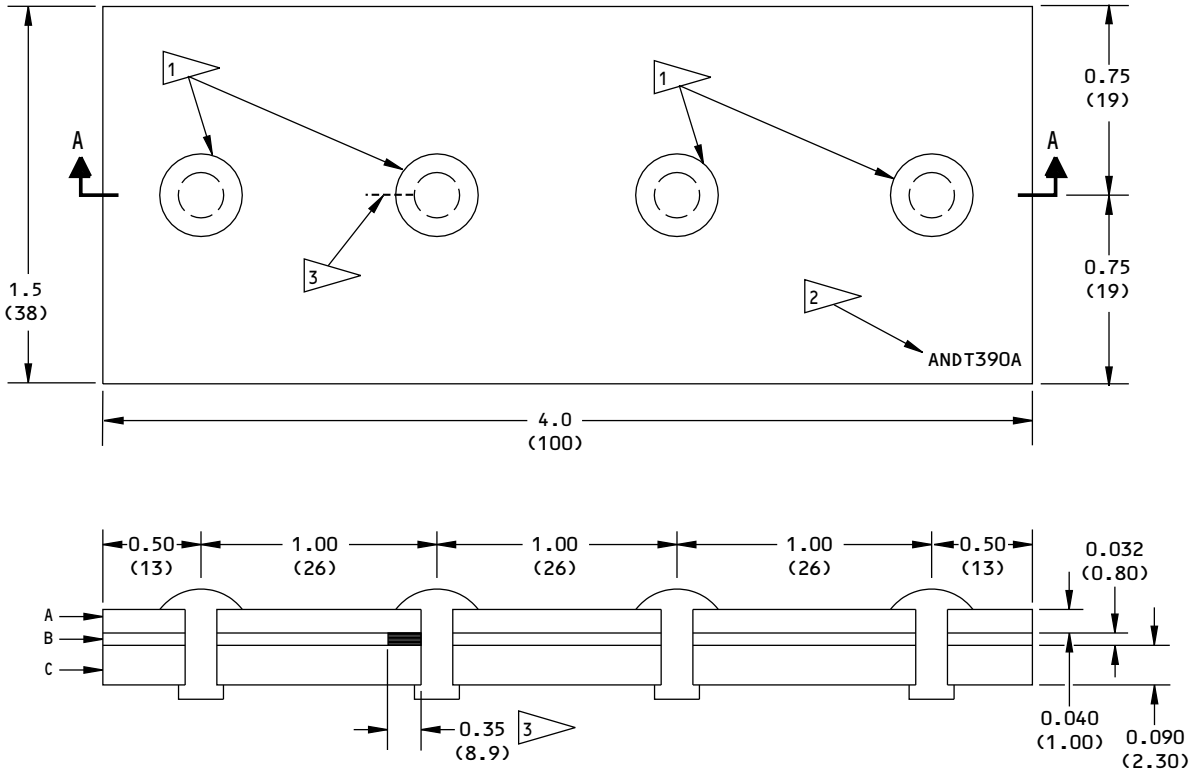

SECTION A-A
(NOT TO SCALE)

NOTES:

- ALL DIMENSIONS ARE IN INCHES (MILLIMETERS IN PARENTHESES)
- DIMENSION TOLERANCE:

INCHES	MILLIMETERS
X.XXX = ±0.005	X.XX = ±0.1
X.XX = ±0.025	X.X = ±0.5
X.X = ±0.050	X = ±1

- MATERIAL:
  (A) 2024-T3; 0.040 (1.00) THICK, CLAD OR BARE
  (B) 2024-T3; 0.032 (0.80) THICK, CLAD OR BARE
  (C) 7075-T6; 0.090 (2.30) THICK, CLAD OR BARE

1 FASTENERS: BACR15BB6* * ALUMINUM RIVETS; QUANTITY 4. THESE RIVETS MUST HAVE A CONVERSION COATED (ALODINED) FINISH. TO MAKE SURE THE FINISH IS ALODINE, REFER TO PART 1, 51-06-01. INSTALL THE RIVETS AS SPECIFIED IN PART 1, 51-01-04.

2 ETCH OR STAMP PART NUMBER ANDT390A. PUT A LETTER "A" IN FRONT OF THE REFERENCE STANDARD NUMBER TO SHOW THAT IT HAS ALODINED RIVETS. SEE FLAGNOTE 1.

3 EDM NOTCH OR JEWELER'S SAWCUT:
LENGTH: 0.35 (8.9)
DEPTH: 0.032 (0.80)
MAXIMUM WIDTH: 0.025 (0.63)

2159744 S0000472115_V2

Reference Standard ANDT390A (for the Subsurface Inspection of the Doublers)
Figure 4

BOEING PROPRIETARY - Copyright © Unpublished Work - See title page for details

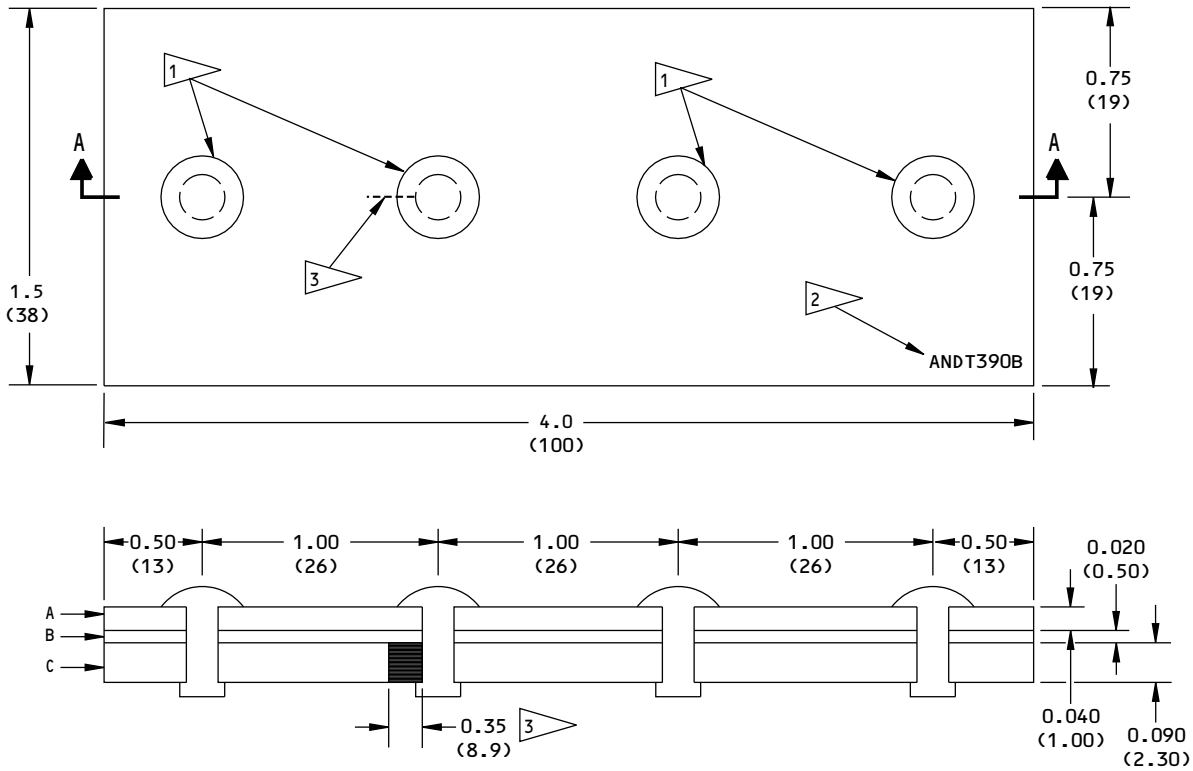

SECTION A-A
(NOT TO SCALE)

NOTES:

- ALL DIMENSIONS ARE IN INCHES (MILLIMETERS IN PARENTHESES)
- DIMENSION TOLERANCE:

INCHES	MILLIMETERS
X.XXX = ±0.005	X.XX = ±0.1
X.XX = ±0.025	X.X = ±0.5
X.X = ±0.050	X = ±1

- MATERIAL:
  (A) 2024-T3; 0.040 (1.00) THICK, CLAD OR BARE
  (B) 2024-T3; 0.020 (0.50) THICK, CLAD OR BARE
  (C) 7075-T6; 0.090 (2.30) THICK, CLAD OR BARE

1 FASTENERS: BACR15BB6* * ALUMINUM RIVETS; QUANTITY 4. THESE RIVETS MUST HAVE A CONVERSION COATED (ALODINED) FINISH. TO MAKE SURE THE FINISH IS ALODINE, REFER TO PART 1, 51-06-01. INSTALL THE RIVETS AS SPECIFIED IN PART 1, 51-01-04.

2 ETCH OR STAMP PART NUMBER ANDT390B. PUT A LETTER "A" IN FRONT OF THE REFERENCE STANDARD NUMBER TO SHOW THAT IT HAS ALODINED RIVETS. SEE FLAGNOTE 1.

3 EDM NOTCH OR JEWELER'S SAWCUT:
LENGTH: 0.35 (8.9)
DEPTH: 0.090 (2.30)
MAXIMUM WIDTH: 0.025 (0.63)

2159746 S0000472116_V2

Reference Standard ANDT390B (for the Subsurface Inspection of the Horizontal Stiffeners)
Figure 5

BOEING PROPRIETARY - Copyright © Unpublished Work - See title page for details

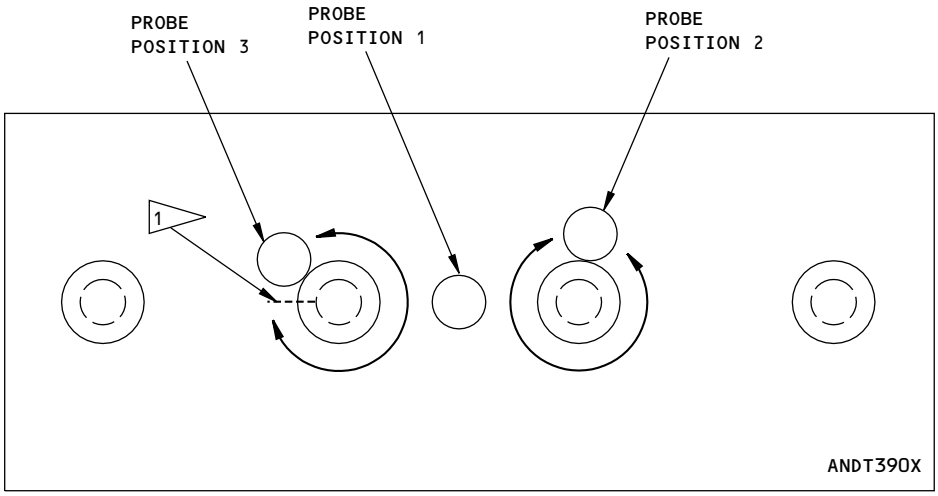

NOTES

- THE PROBE POSITIONS AND SCANS SHOWN ABOVE ARE THE SAME ON REFERENCE STANDARDS ANDT390A AND ANDT390B.

1 REFERENCE NOTCH OR SAWCUT

2159751 S0000472117_V1

Calibration Probe Positions on Reference Standards ANDT390A and ANDT390B
Figure 6

BOEING PROPRIETARY - Copyright © Unpublished Work - See title page for details

PART 6 - EDDY CURRENT

LOWER LOBE FRAMES AT STRINGER 17 (METER DISPLAY INSTRUMENTS)

1. Purpose

A. This inspection procedure uses meter display instruments to find cracks in the frames immediately below stringer 17 (on the left and right sides of the airplane) with a subsurface and a surface inspection. See Figure 1, Figure 2, and Figure 3 for the inspection locations. To do this inspection with instruments that have impedance plane display, use Part 6, 53-10-49.

B. Subsurface inspections are used to do inspections of the frame webs from BS 259 to 540 through the floor beam webs. Subsurface inspections will find cracks in the frame webs that are 0.350 inch (8.89 mm) in length or longer. See Figure 2.

C. The surface inspection is done on the left and right sides of the airplane at BS 312 and 328. The surface inspection will find cracks in the frame webs that are 0.125 inch (3.18 mm) in length or longer. These crack lengths are measured from the outer edge of the collars and from the edge of the frame chords. See Figure 3.

D. 737 Supplemental Structural Inspection Document (D6-37089, -100/-200; D6-82669, -300/-400/-500) Reference:

(1) Item: F-33B

(2) Item: F-33C

(3) Item: F-34B

(4) Item: F-34C

2. Equipment

NOTE: Refer to Part 1, 51-01-00, for data about the equipment manufacturers.

A. Instruments

(1) All eddy-current instruments that have a meter display are permitted for use if they:

(a) Can operate at a frequency between 2.0 and 3.0 kHz (for the subsurface inspection).

(b) Can operate at a frequency between 100 and 500 kHz (for the surface inspection).

(c) Agree with the conditions of this procedure.

(2) The instruments that follow were used to help prepare this procedure.

(a) MIZ 10A/B; Zetec (for the subsurface and surface inspections).

(b) Locator UH; Hocking (for the surface inspection only).

B. Probes

(1) For the subsurface inspection - All shielded spot probes that can operate between 2.0 and 3.0 kHz and have a maximum diameter of 0.40 inch (10 mm) can be used. This probe will be used to examine the frame webs through the floor beam webs. See Figure 1 and Figure 2.

NOTE: Most of the frame webs can be examined with a straight probe. But some configurations make it necessary to use an angle probe to get access to the inspection areas.

(a) The shielded probes that follow were used to help prepare this procedure.

1) SPO-1305 1-5 kHz; Nortec (angle probe)

2) SPO-1071 5 kHz; Nortec (angle probe)

BOEING PROPRIETARY - Copyright © Unpublished Work - See title page for details

3) SPO-1284 1-5 kHz; Nortec
4) LP375-3L/5K; NDT Engineering
5) P905-40/5K; NDT Engineering

(2) For the surface inspection - All shielded 90 degree and straight pencil probes that can operate between 100 kHz and 500 kHz can be used. The probe diameter must be 0.150 inch (3.8 mm) or less. This probe will be used to examine the surface of the frame webs shown in Figure 3.

(a) The surface probes that follow were used to help prepare this procedure.

1) MP902-40BL/500K; NDT Engineering
2) MP-20 L/500K; NDT Engineering

C. Reference Standards

(1) Use reference standard ANDT388 to do the subsurface inspection. See Figure 4.

(2) Use reference standard 126 to do the surface inspection. See Part 6, 51-00-00, Procedure 4.

3. Prepare for the Inspection

A. Prepare for the subsurface inspection of the frame webs as follows:

(1) Get access to the inspection locations immediately below stringer 17 in the cargo bay. The inspection locations are the frames from BS 259.5 to 540.

NOTE: Alternative access to the inspection locations is from the main deck with the outer floor panels removed between BS 259.5 and 540.

(2) Get access to where the floor beam webs and the frame webs are attached immediately below water line 208.1.

(3) Make sure the floor beam webs are clean between the top row of fasteners at the inspection areas from BS 259.5 to 540 on the left and right sides of the airplane. See Figure 2.

(4) Make sure the attach channel is clean on the aft side of the frame at BS 360 on the left side of the airplane.

B. Prepare for the surface inspection of the frames as follows:

(1) Get access to the inspection area through the electronic access door between BS 328 and 344.

(2) Make sure that the forward side of the frame webs on the right side of the airplane are clean immediately below stringer 17 at BS 312 and 328. See Figure 3.

4. Instrument Calibration

NOTE: Refer to the instruments instruction manual for instrument operation instructions.

A. Calibrate the instruments for the subsurface inspection of the frame webs as follows:

(1) Set the instrument frequency between 2.0 and 3.0 kHz.

(2) Put the probe at position 1 on reference standard ANDT388. See Figure 5.

(3) Balance the instrument.

(4) Set lift-off with the probe at position 1. See Detail I in Figure 5. Set lift-off so that the meter needle moves no more than 5 percent of full scale height for probe to part distances of up to 0.006 inch (thickness of two sheets of paper).

(5) Put the probe on reference standard ANDT388 adjacent to the fastener head that does not have a notch adjacent to it. See Detail 1, position 2 in Figure 5.

BOEING PROPRIETARY - Copyright © Unpublished Work - See title page for details

(6) Balance the instrument again.

(7) Adjust the meter position control to set the meter needle to 20 percent of full scale height.

(8) Put the probe on reference standard ANDT388 adjacent to the fastener head that has a notch adjacent to it. See Detail 1, position 3 in Figure 5.

(9) Move the probe around this fastener to make a scan. Adjust the instrument sensitivity to get a meter response which is 80 percent of full scale height (60 percent of full scale height higher than the balance point).

(10) Balance the instrument again and make sure the lift-off is set as specified in Paragraph 4.A.(4).

B. Calibrate the instruments for the surface inspection of the forward side of the frame webs immediately below stringer 17 as follows:

(1) Set the instrument between 100 and 500 kHz.

(2) Calibrate a surface probe and instrument with reference standard 126 as specified in Part 6, 51-00-00, Procedure 4.

(3) Balance the instrument as specified in the manufacturer's instructions.

(4) Set lift-off so that the meter needle moves no more than 5 percent of full scale height for probe to part distances of up to 0.006 inch (0.15 mm) (thickness of two sheets of paper).

5. Inspection Procedure

A. For the subsurface inspection of the frame webs below waterline 208.1 between BS 259.5 to 540 on the left and right sides of the airplane. See Figure 2.

NOTE: For the inspection of BS 360 on the left side of the airplane only, see Paragraph 5.B.

(1) Calibrate the equipment as specified in Paragraph 4.A.

(2) Balance the instrument and adjust the signal position so that it is at 20 percent of full scale height.

(3) Put the probe on an applicable floor beam web where it is attached to a frame. Put the probe adjacent to a fastener immediately below water line 208.1. See Figure 2 for the inspection areas.

(4) Do a scan with the probe between the fasteners shown in Figure 2. Do the probe scan in an up and down direction between the fasteners and around the lower half of the fasteners. Make sure the center of the probe coil goes across the fastener centerline. See Detail 2 in Figure 5 for an example of the scan pattern.

(5) Do a scan with the probe between these fasteners on BS 259.5 to 540 (left and right sides of the airplane). See Figure 2.

NOTE: The left side of BS 360 must be examined as specified in Paragraph 5.B.

B. For the subsurface inspection of the frame webs below waterline 208.1 at BS 360 on the left side of the airplane only, see Figure 2, Sheet 2.

(1) Calibrate the equipment as specified in Paragraph 4.A.

(2) Put the probe on the attach channel on the aft side of the frame at station 360 on the left side of the airplane. Make sure the probe is adjacent to the collar and immediately above the fastener line. See Figure 2, Sheet 2.

(3) Balance the instrument and adjust the signal position so that it is at 20 percent of full scale height.

(4) Do a scan in a vertical direction adjacent to the collars shown in Figure 2, Sheet 2. During the scan:

BOEING PROPRIETARY - Copyright © Unpublished Work - See title page for details

(a) Make sure the center of the probe moves across the fastener centerline. An edge effect signal will occur from the attach channel.

(b) See how the signal from the notch in reference standard ANDT388 shows when the center of the probe is at the fastener centerline.

(5) Before you start each scan, balance the instrument at each inspection location.

C. Inspection procedure for the surface inspection of the frame webs on the right side (only) of the airplane immediately below stringer 17 at BS 312 and 328.

(1) Calibrate the equipment as specified in Paragraph 4.B.

(2) Do a scan with the probe on the forward side of the frame webs immediately below stringer 17 at BS 312 (right side of the airplane). Do a scan in an up and down direction between the upper row of fasteners. See Figure 3.

(3) Do a scan with the probe on the inspection area at BS 328 (right side of the airplane) as done in Paragraph 5.B.(2).

NOTE: It is not necessary to do a surface eddy-current inspection on the left side of the airplane at BS 312 and 328 with this procedure.

6. Inspection Results

A. Inspection results for the subsurface inspection:

(1) Upscale indications that are 20 percent (or more) of full scale height above the balance point are possible crack indications. Upscale crack indications occur during a short scan. Compare all upscale indications to the upscale indication from the reference notch on the reference standard.

NOTE: A slow upscale indication can be caused by a large separation between the layers. This type of indication shows on the meter during a long scan. Compare these indications to the reference notch indications that show quickly on the meter during a short scan.

B. Inspection results for the surface inspection:

(1) Upscale indications that are 20 percent (or more) of full scale height above the balance point are possible crack indications. Upscale crack indications occur during a short scan. Compare all upscale indications to the upscale indication from the reference notch on the reference standard.

BOEING PROPRIETARY - Copyright © Unpublished Work - See title page for details

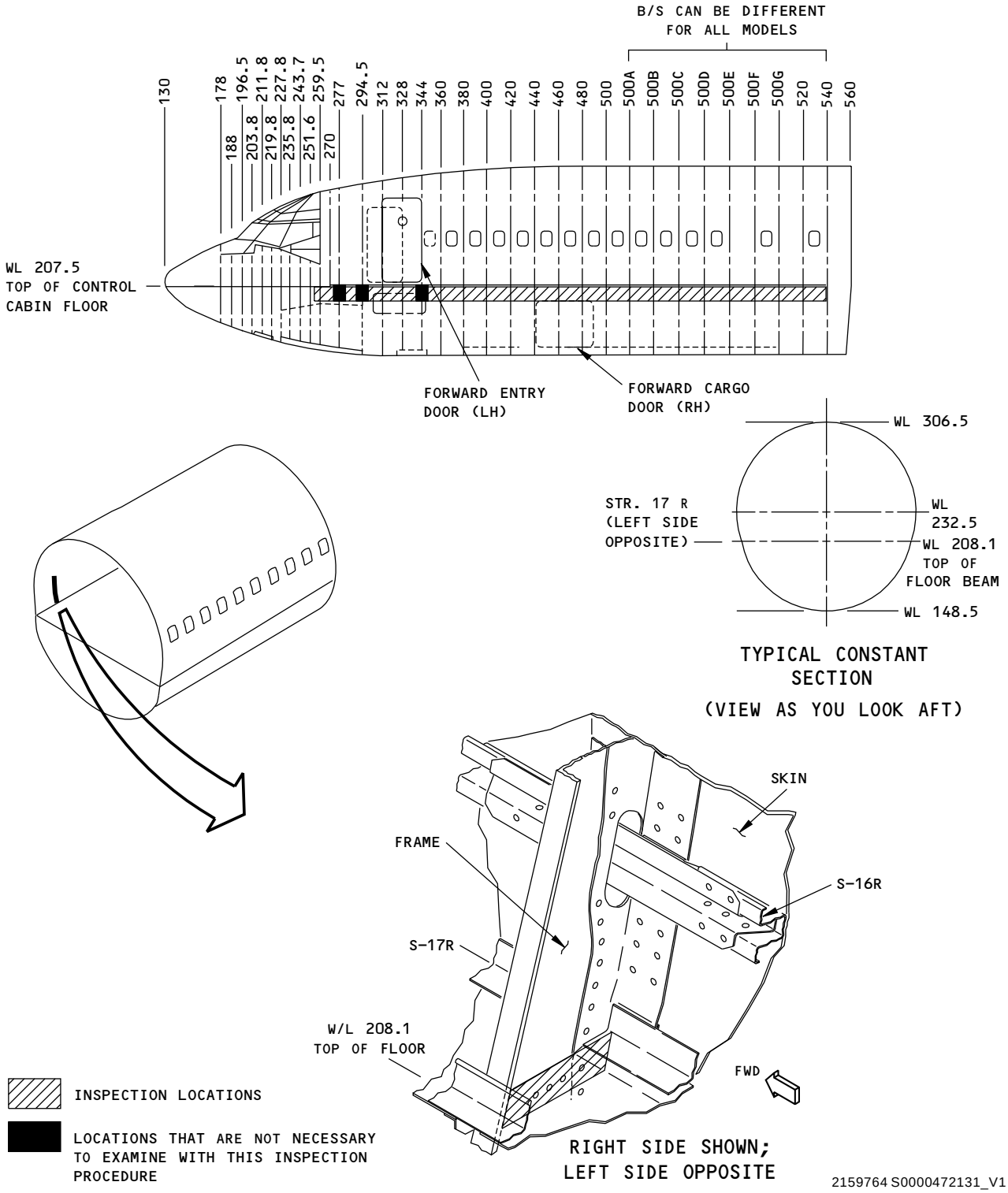

Inspection Locations
Figure 1

BOEING PROPRIETARY - Copyright © Unpublished Work - See title page for details

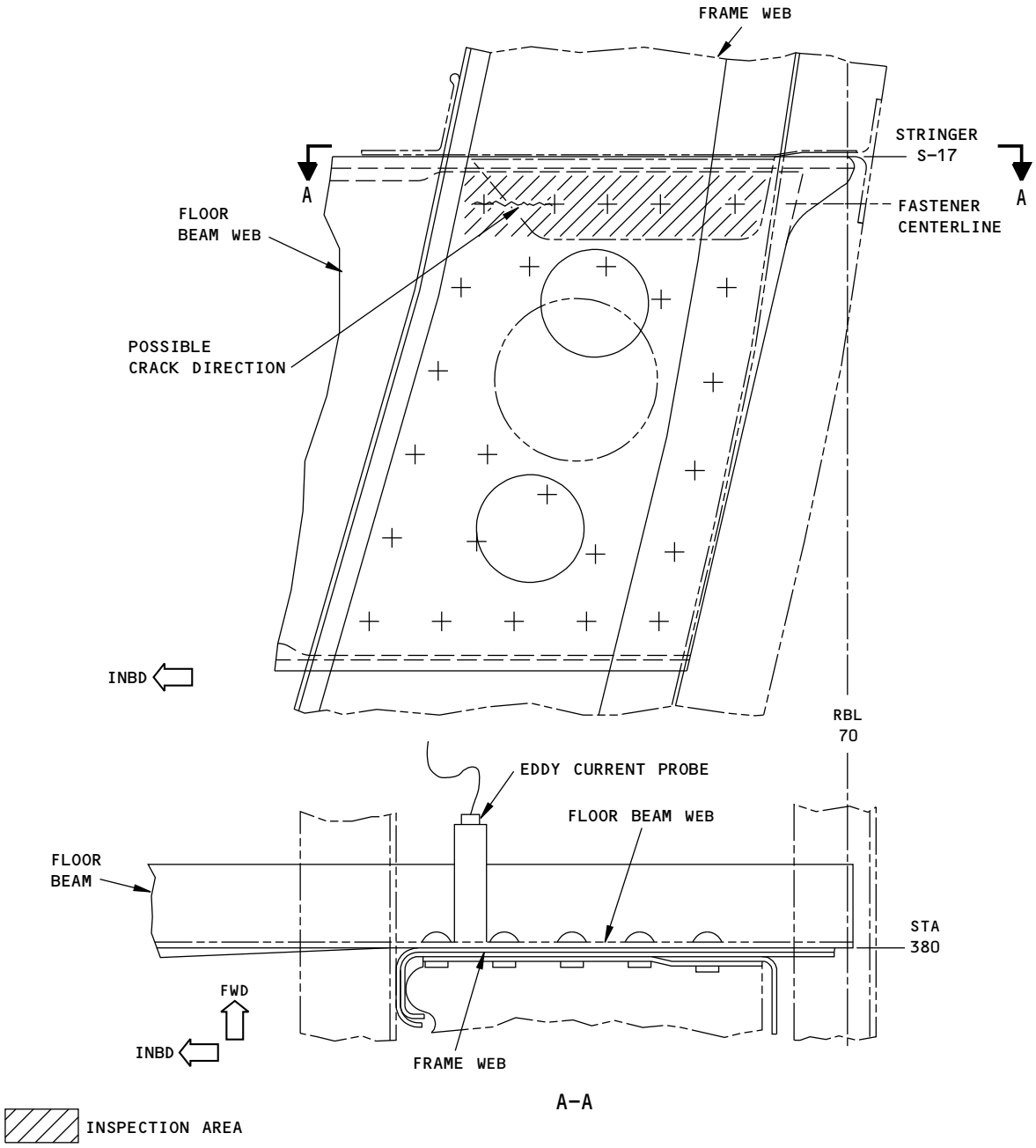

NOTE:

- THE SUBSURFACE INSPECTION OF THE FRAME WEB IS DONE FROM THE FORWARD SIDE OF THE FLOOR BEAM WEB

REAR VIEW OF STATION 380 SHOWN
STATIONS 259.5 TO 540 ARE EQUIVALENT
DETAIL I

2159767 S0000472133_V1

Frame Webs to be Examined by Subsurface Eddy Current Inspection
Figure 2 (Sheet 1 of 2)

BOEING PROPRIETARY - Copyright © Unpublished Work - See title page for details

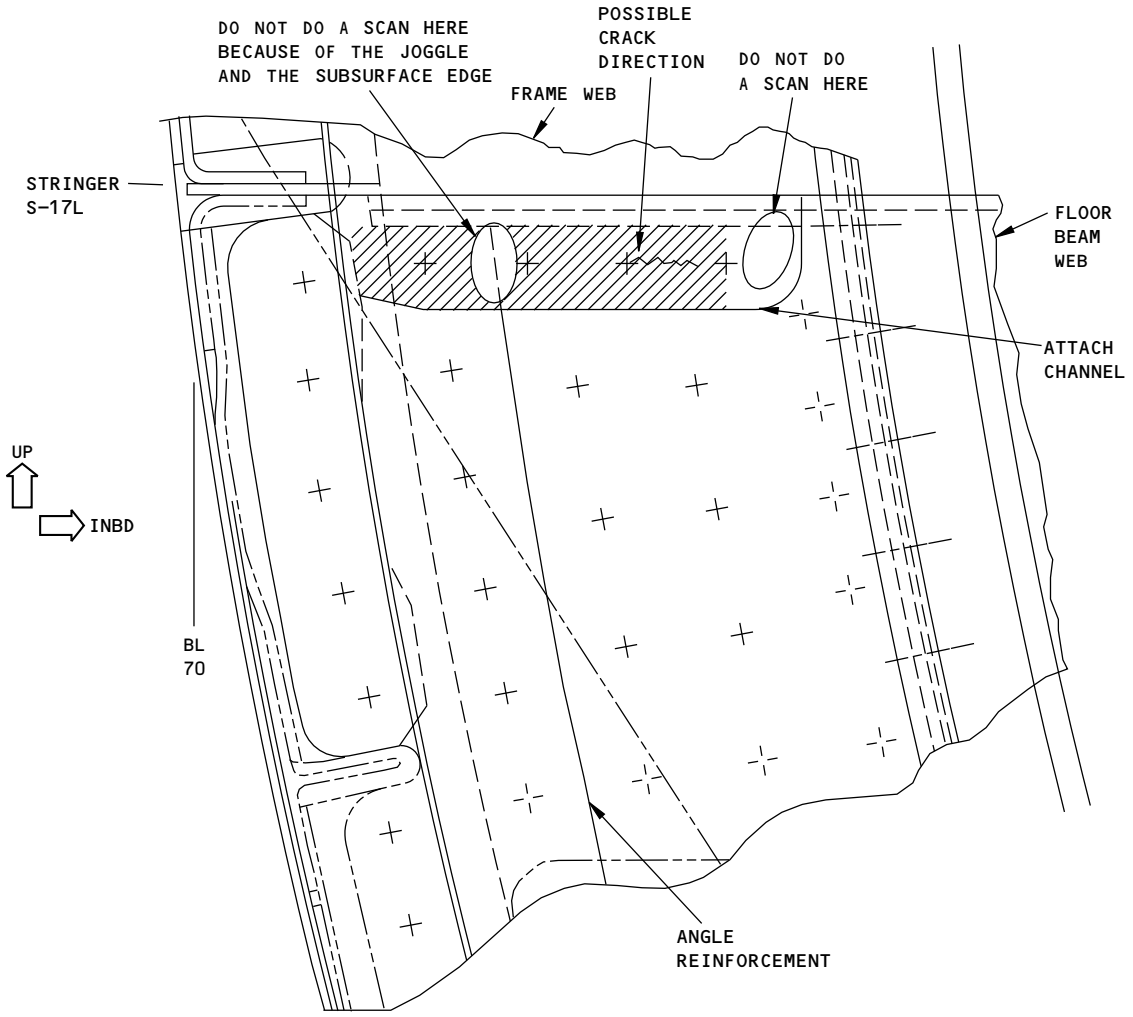

REAR VIEW OF STATION 360
(LEFT SIDE OF THE AIRPLANE)
DETAIL II

INSPECTION AREA

NOTES:

- THE SUBSURFACE INSPECTION OF THE FRAME WEB AT BODY STATION 360 (LEFT SIDE OF THE AIRPLANE) IS DONE FROM THE AFT SIDE OF THE FRAME.
- BALANCE THE PROBE AT EACH OF THE INSPECTION AREAS SHOWN ABOVE BEFORE THE SCAN IS DONE.
- DO THE SCAN IN A VERTICAL DIRECTION ON THE CROSS HATCHED AREAS SHOWN ABOVE.

2159768 S0000472134_V1

Frame Webs to be Examined by Subsurface Eddy Current Inspection
Figure 2 (Sheet 2 of 2)

BOEING PROPRIETARY - Copyright © Unpublished Work - See title page for details

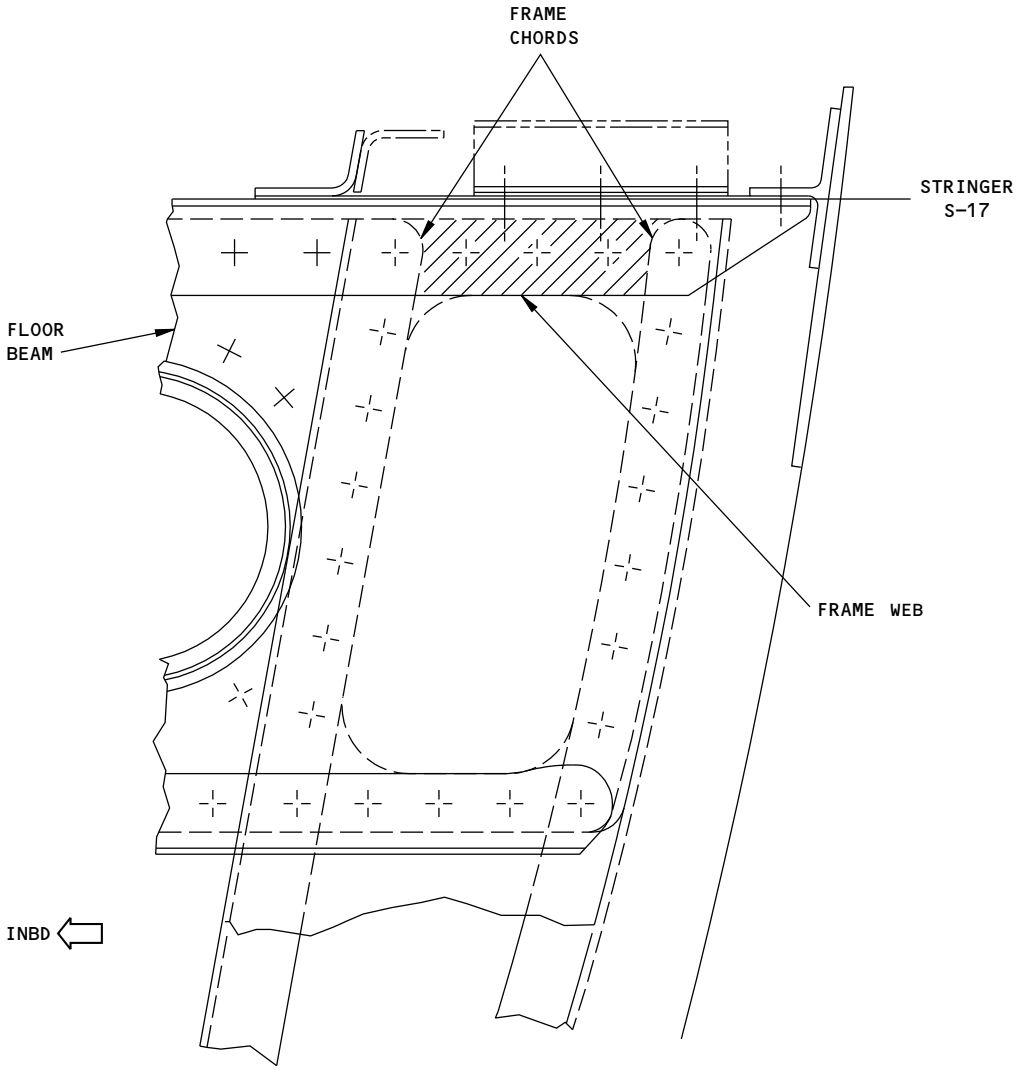

REAR VIEW OF STATION 312 SHOWN
STATION 328 IS EQUIVALENT

INSPECTION AREA ON FRAME WEB

NOTE

- THE SURFACE INSPECTION OF THE FRAME WEBS IS DONE ON THE FORWARD SIDE OF THE FRAME WEBS AT BS312 AND BS328 BETWEEN THE FRAME CHORDS

2159780 S0000472135_V1

Frame Webs to be Examined by Surface Eddy Current Inspection
Figure 3

BOEING PROPRIETARY - Copyright © Unpublished Work - See title page for details

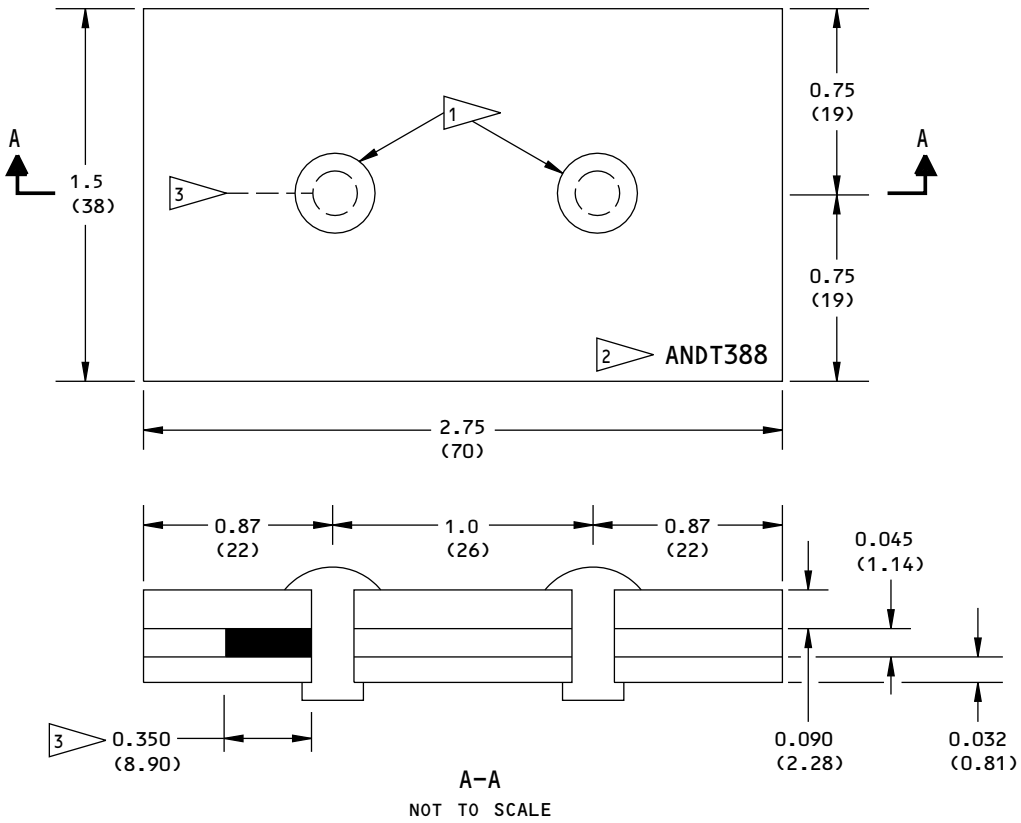

NOTES:

- MATERIAL: 7075-T6 BARE OR CLAD
- ALL DIMENSIONS ARE IN INCHES (MILLIMETERS IN PARENTHESES)
- DIMENSION TOLERANCE:

INCHES	MILLIMETERS
X.XXX = ±0.005	X.XX = ±0.1
X.XX = ±0.025	X.X = ±0.5
X.X = ±0.050	X = ±1

1 FASTENERS: 1/4 INCH DIAMETER RIVETS BACR15BB8* OR EQUIVALENT. THESE RIVETS MUST HAVE A CONVERSION COATED (ALODINED) FINISH. TO MAKE SURE THE FINISH IS ALODINE, REFER TO PART 1, 51-06-01. INSTALL THE RIVETS AS SPECIFIED IN PART 1, 51-01-04.

2 ETCH OR STAMP PART NUMBER ANDT388. PUT A LETTER "A" IN FRONT OF THE REFERENCE STANDARD NUMBER TO SHOW THAT IT HAS ALODINED RIVETS. SEE FLAGNOTE 1.

3 EDM NOTCH OR JEWELER'S SAWCUT:
LENGTH: 0.350 (8.90)
DEPTH: 0.045 (1.14)
MAXIMUM WIDTH: 0.025 (0.635)
NOTCH TOLERANCE:
LENGTH: ±0.035
DEPTH: THROUGH THICKNESS

2159785 S0000472136_V1

Reference Standard for the Subsurface Inspection of the Frame Web Through the Floor Beam Web Immediately Below Stringer 17 - From BS 259.5 to BS 540
Figure 4

BOEING PROPRIETARY - Copyright © Unpublished Work - See title page for details

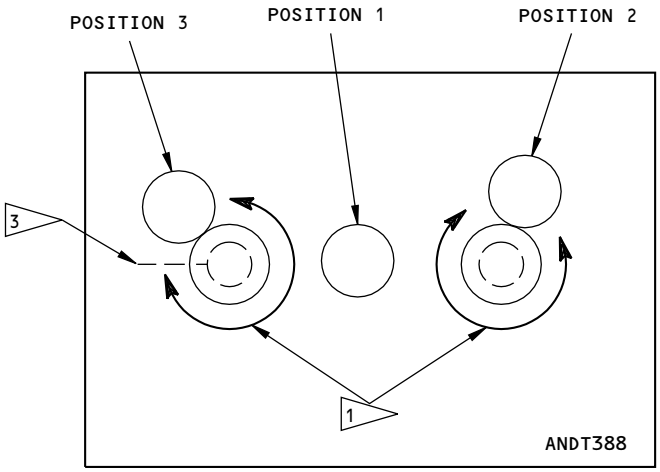

DETAIL I

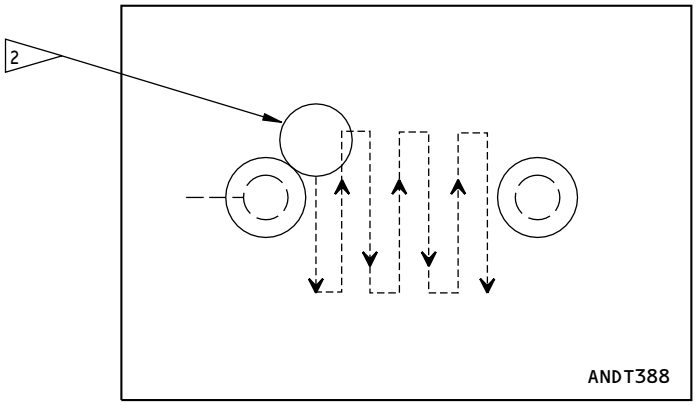

DETAIL II

NOTES

- REFERENCE STANDARD ANDT388 IS USED TO DO THE SUBSURFACE INSPECTIONS OF THIS PROCEDURE ONLY.
- REFERENCE STANDARD 126, SHOWN IN PART 6, 51-00-00, PROCEDURE 4, IS USED TO DO THE SURFACE INSPECTIONS OF THIS PROCEDURE.

1 MOVE THE PROBE 360 DEGREES AROUND THE FASTENERS DURING THE CALIBRATION.

2 DURING THE INSPECTION, DO THE SCAN IN AN UP AND DOWN DIRECTION BETWEEN THE FASTENERS AND AROUND THE LOWER HALF OF THE FASTENERS.

3 NOTCH

2159789 S0000472138_V2

Calibration Probe Positions on Reference Standard ANDT388 For the Subsurface Inspection
Figure 5

BOEING PROPRIETARY - Copyright © Unpublished Work - See title page for details

PART 6 - EDDY CURRENT

LOWER LOBE FRAMES AT STRINGER 17 (IMPEDANCE PLANE DISPLAY INSTRUMENTS)

1. Purpose

A. This inspection procedure uses impedance plane display instruments to find cracks in the frames immediately below stringer 17 (on the left and right sides of the airplane) with a subsurface and a surface inspection. See Figure 1, Figure 2, and Figure 3 for the inspection locations. To do this inspection with instruments that have meter display, use Part 6, 53-10-48.

B. Subsurface inspections are used to do inspections of the frame webs from BS 259 to 540 through the floor beam webs. Subsurface inspections will find cracks in the frame webs that are 0.350 inch in length or longer (see Figure 2).

C. The surface inspection is done on the left and right side of the airplane at BS 312 and 328. The surface inspection will find cracks in the frame webs that are 0.125 inch in length or longer. These crack lengths are measured from the outer edge of the collars and from the edge of the frame chords. See Figure 3.

D. 737 Supplemental Structural Inspection Document (D6-37089 and D6-82669) Reference:

(1) Item: F-33B

(2) Item: F-34B

2. Equipment

NOTE: Refer to Part 1, 51-01-00, for data about the equipment manufacturers.

A. Instruments

(1) All eddy-current instruments that have impedance plane display are permitted for use if they:

(a) Can operate at a frequency between 2.0 and 3.0 kHz (for the subsurface inspection).

(b) Can operate at a frequency between 100 and 500 kHz (for the surface inspection).

(c) Agree with the conditions of this procedure.

(2) The instruments specified below were used to help prepare this procedure. These instruments were used for the subsurface and surface inspections.

(a) NDT 19; Nortec/Staveley

(b) Phasec 1.1; Hocking

(c) Phasec 2200; Hocking

B. Probes

(1) For the subsurface inspection - All shielded spot probes that can operate between 2.0 and 3.0 kHz and have a maximum diameter of 0.40 inch (10 mm) can be used. This probe will be used to examine the frame webs through the floor beam webs. See Figure 1 and Figure 2.

NOTE: Most of the frame webs can be examined with a straight probe, but some configurations make it necessary to use an angle probe to get access to the inspection areas.

(a) The shielded probes specified below were used to help prepare this procedure.

1) SPO-1305 1-5 kHz; Nortec (angle probe)

2) SPO-1071 5 kHz; Nortec (angle probe)

3) SPO-1284 1-5 kHz; Nortec

BOEING PROPRIETARY - Copyright © Unpublished Work - See title page for details

4) LP375-3L/5K; NDT Engineering

5) P905-40/5K; NDT Engineering

(2) For the surface inspection - All shielded 90 degree and straight pencil probes that can operate between 100 and 500 kHz can be used. The probe diameter must be 0.150 inch (3.8 mm) or less. This probe will be used to examine the surface of the frame webs. See Figure 1 and Figure 3.

(a) The surface probes specified below were used to help prepare this procedure:

1) MP902-40BL/500K; NDT Engineering

2) MP-20 L/500K; NDT Engineering

C. Reference Standards

(1) Reference standard ANDT388 is used to do the subsurface inspection. See Figure 4.

(2) Reference standard 126 is used to do the surface inspection. See Part 6, 51-00-00, Procedure 4.

3. Prepare for the Inspection

A. Prepare for the subsurface inspection of the frame webs as follows:

(1) Make sure the instrument, probe, reference standard and the airplane are at the same temperature.

(2) Get access to the inspection locations immediately below stringer 17 in the cargo bay. The inspection locations are the frames from BS 259.5 to 540.

NOTE: Alternative access to the inspection locations is from the main deck with the outer floor panels removed between BS 259.5 and 540.

(3) Get access to where the floor beam webs and the frame webs are attached immediately below water line 208.1.

(4) Make sure the floor beam webs are clean between the top row of fasteners at the inspection areas from BS 259.5 to 540 on the right side of the airplane and from BS 380 to 520 on the left side of the airplane. See Figure 2.

(5) Make sure the attach channel is clean on the aft side of the frame at BS 360 on the left side of the airplane.

NOTE: The access for the frame web inspection at BS 360 on the left side of the airplane is from the aft side of the frame.

B. Prepare for the surface inspection of the frames as follows:

(1) Make sure the instrument, probe, reference standard and the airplane are at the same temperature.

(2) Get access to the inspection area through the electronic access door between BS 328 and 344 on the right side of the airplane.

(3) Make sure that the forward side of the frame webs on the right side of the airplane are clean immediately below stringer 17 at BS 312 and 328. See Figure 3.

4. Instrument Calibration

NOTE: Refer to the instruments instruction manual for instrument operation instructions.

A. Calibrate the instruments for the subsurface inspection of the frame webs as follows:

(1) Set the instrument frequency between 2.0 and 3.0 kHz.

BOEING PROPRIETARY - Copyright © Unpublished Work - See title page for details

(2) Put the probe at position 1 on reference standard ANDT388. See Figure 5.

(3) Balance the instrument.

(4) Set lift-off with the probe at position 1 (see Detail I in Figure 5). Set lift-off so that the signal goes horizontally and to the left.

NOTE: A more satisfactory vertical indication will occur if the vertical gain is higher than the horizontal gain. Try different vertical/horizontal gain ratios during the calibration.

(5) Put the probe on reference standard ANDT388 at position 2 as shown in Detail I in Figure 5 and balance the instrument.

(6) Adjust the position of the balanced signal so that it is at 20 percent of full-screen height. See Figure 6.

(7) Put the probe on reference standard ANDT388 adjacent to the fastener head that has a notch adjacent to it. See Figure 5, position 3.

(8) Make a scan around this fastener to make a scan.

(9) Adjust the instrument sensitivity to get a vertical indication that is 80 percent of full-screen height (60 percent of full-screen height higher than the balance position) when the scan moves across the notch. See Figure 6.

(10) Balance the instrument again at position 1 as specified in Paragraph 4.A.(3) and make sure the lift-off signal moves horizontally to the left as shown in Figure 6.

B. Calibrate the instruments for the surface inspection of the forward side of the frame webs immediately below stringer 17 as follows:

(1) Set the instrument between 100 and 500 kHz.

(2) Calibrate a surface probe and instrument with reference standard 126 as specified in Part 6, 51-00-00, Procedure 4.

(3) Balance the instrument as specified in the manufacturer's instructions.

(4) Set lift-off so that the signal goes horizontally and to the left. See Figure 7.

NOTE: A more satisfactory vertical indication will occur if the vertical gain is higher than the horizontal gain. Try different vertical/horizontal gain ratios during calibration.

(5) Adjust the signal position control to set the signal to 20 percent of full-screen height. See Figure 7.

(6) Make a scan across the notch in the reference standard and adjust the instrument sensitivity to get a vertical indication that is 80 percent of full-screen height (60 percent of full-screen height higher than the balance position). See Figure 7.

(7) Balance the instrument again as in Paragraph 4.B.(3) and make sure the signal moves horizontally to the left. See Figure 7.

5. Inspection Procedure

A. Do the subsurface inspection of the frame webs immediately below water line 208.1 between BS 360 to 520 on the right side of the airplane and BS 380 to 520 on the left side of the airplane. See Detail I in Figure 2.

(1) Calibrate the equipment as specified in Paragraph 4.A.

BOEING PROPRIETARY - Copyright © Unpublished Work - See title page for details

(2) Put the probe on an applicable floor beam web where it is attached to the frame. Put the probe adjacent to a fastener immediately below water line 208.1. See Detail I in Figure 2 for the inspection areas.

(3) Balance the instrument and adjust the signal position so that it is at 20 percent of full-screen height.

(4) Do a scan with the probe between the fasteners shown in Detail I in Figure 2. Do the probe scan in an up and down direction between the fasteners and around the lower half of the fasteners. Make sure the center of the probe coil goes across the fastener centerline. See Detail II in Figure 5 for example of the scan pattern.

(5) Do a scan with the probe between these fasteners on BS 259.5 to 540 on the left and right sides of the airplane.

NOTE: The left side of BS 360 must be examined as specified in Paragraph 5.B.

B. Do the subsurface inspection of the frame web below water line 208.1 at BS 360 on the left side of the airplane. See Detail II in Figure 2.

(1) Calibrate the equipment as specified in Paragraph 4.A.

(2) Put the probe on the attach channel on the aft side of the frame at station 360 on the left side of the airplane. Make sure the probe is adjacent to the collar and immediately above the fastener centerline. (See Detail II in Figure 2).

(3) Balance the instrument and adjust the signal position so that it is at 20 percent of the full screen height and 20 percent of full screen width.

(4) Do a scan in a vertical direction adjacent to the collars where shown in Detail II in Figure 2. During the scan:

(a) Make sure the center of the probe goes across the fastener centerline. If the probe goes too far below the fastener centerline, an edge effect signal will occur from the attach channel.

(b) See how the signal from the notch in reference standard ANDT388 shows when the center of the probe is at the fastener centerline.

(5) Before you start each scan, balance the instrument at each inspection location.

C. Inspection procedure for the surface inspection of the frame webs on the right side (only) of the airplane immediately below stringer 17 at BS 312 and 328.

(1) Calibrate the equipment as specified in Paragraph 4.B.

(2) Do a scan with the probe on the forward side of the frame webs immediately below stringer 17 at BS 312 (right side of the airplane). Do a scan in an up and down direction between the upper row of fasteners. See Figure 3.

(3) Do a scan with the probe on the inspection area at BS 328 (right side of the airplane) as done in Paragraph 5.C.(2).

NOTE: It is not necessary to do an eddy-current inspection on the left side of the airplane at BS 312 and 328 with this procedure.

6. Inspection Results

A. Inspection results for the subsurface inspection:

BOEING PROPRIETARY - Copyright © Unpublished Work - See title page for details

(1) Vertical indications that are 20 percent (or more) of full screen height above the balance position are possible crack indications. Vertical crack indications occur during a short scan. Compare all vertical indications to the vertical indication from the reference notch on the reference standard. See Figure 6.

NOTE: A slow vertical indication can be caused by a large separation between the layers. This type of indication shows on the impedance plane screen during a long scan. Compare these indications to the reference notch indications that show quickly on the screen during a short scan.

B. Inspection results for the surface inspection:

(1) Indications that move vertically and are 20 percent (or more) of full screen height above the balance position are possible crack indications. Crack indications occur during a short scan. Compare all indications to the indication from the notch on the reference standard.

BOEING PROPRIETARY - Copyright © Unpublished Work - See title page for details

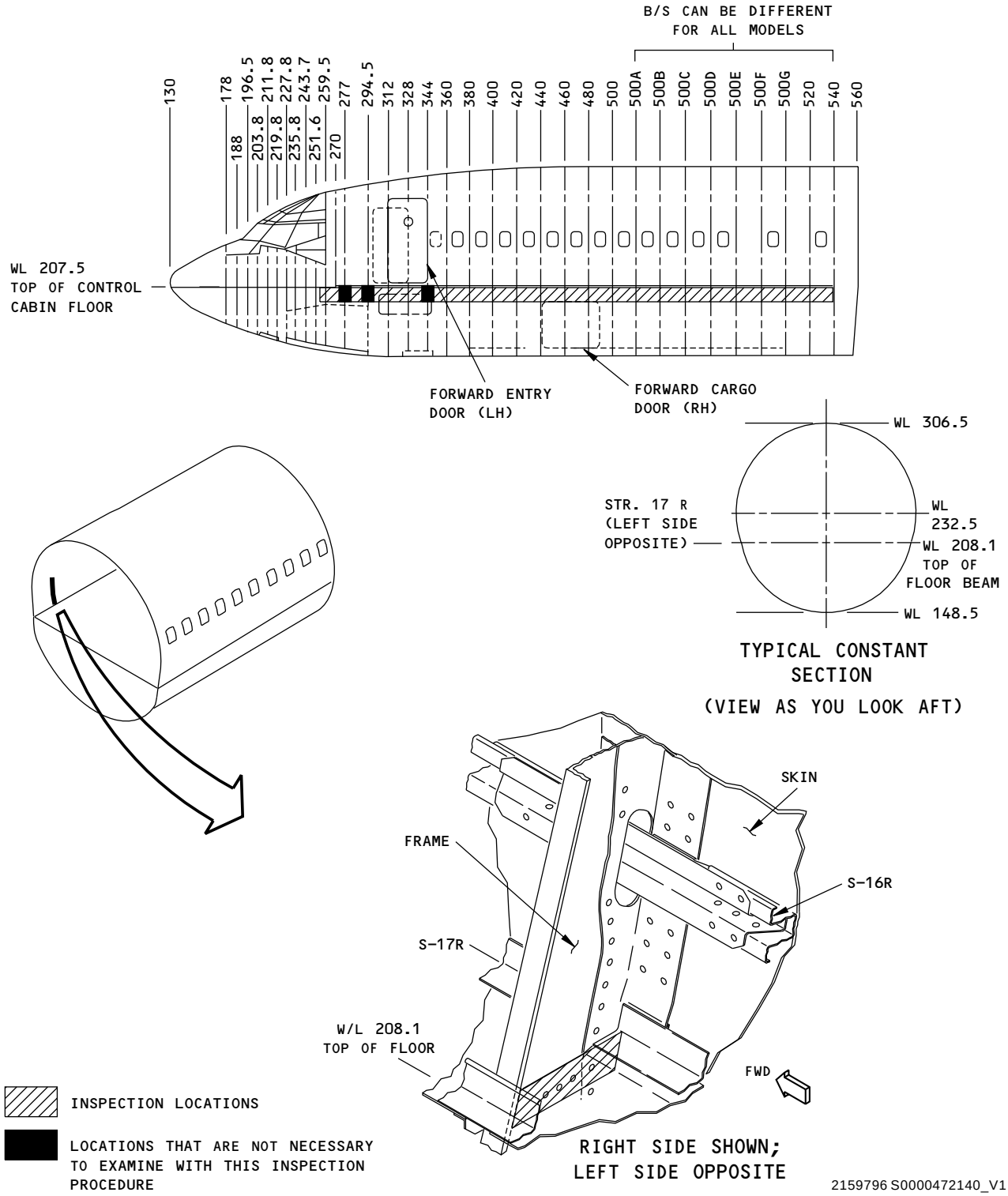

Inspection Locations
Figure 1

BOEING PROPRIETARY - Copyright © Unpublished Work - See title page for details

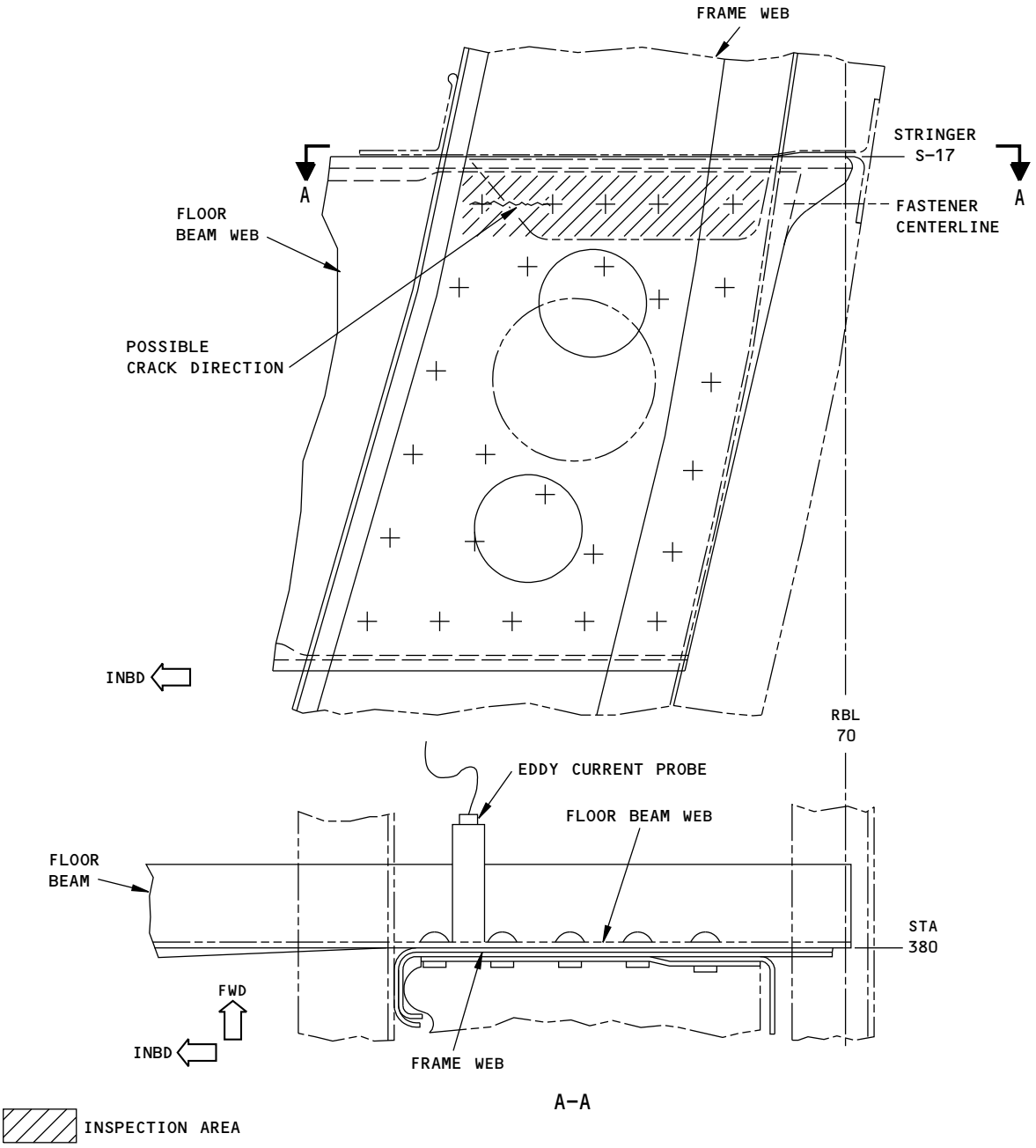

NOTE:

- THE SUBSURFACE INSPECTION OF THE FRAME WEB IS DONE FROM THE FORWARD SIDE OF THE FLOOR BEAM WEB

REAR VIEW OF STATION 380 SHOWN
STATIONS 259.5 TO 540 ARE EQUIVALENT
DETAIL I

2159805 S0000472146_V1

Frame Webs to be Examined by Subsurface Eddy Current Inspection
Figure 2 (Sheet 1 of 2)

BOEING PROPRIETARY - Copyright © Unpublished Work - See title page for details

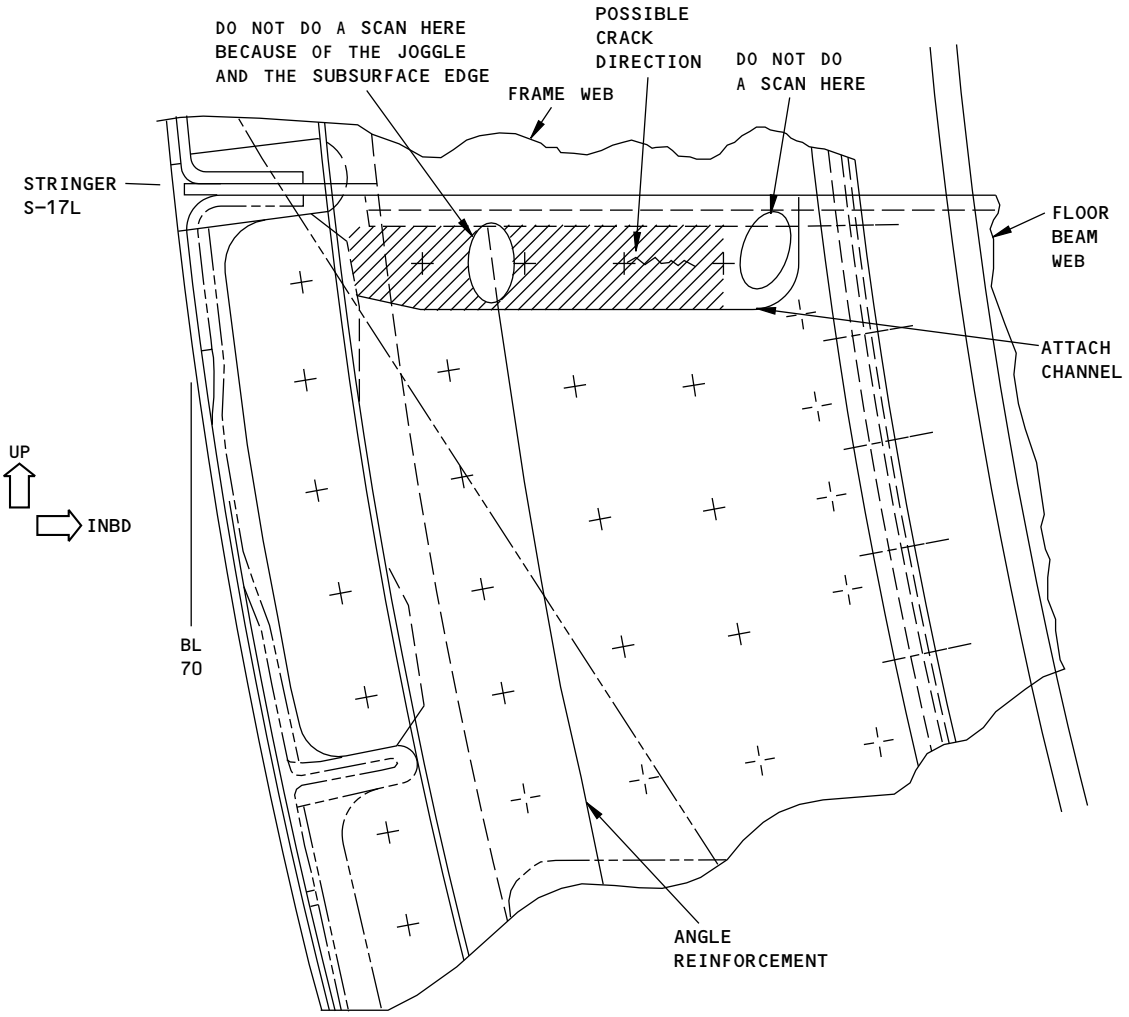

REAR VIEW OF STATION 360
(LEFT SIDE OF THE AIRPLANE)
DETAIL II

INSPECTION AREA

NOTES:

- THE SUBSURFACE INSPECTION OF THE FRAME WEB AT BODY STATION 360 (LEFT SIDE OF THE AIRPLANE) IS DONE FROM THE AFT SIDE OF THE FRAME.
- BALANCE THE PROBE AT EACH OF THE INSPECTION AREAS SHOWN ABOVE BEFORE THE SCAN IS DONE.
- DO THE SCAN IN A VERTICAL DIRECTION ON THE CROSS HATCHED AREAS SHOWN ABOVE.

2159808 S0000472147_V1

Frame Webs to be Examined by Subsurface Eddy Current Inspection
Figure 2 (Sheet 2 of 2)

BOEING PROPRIETARY - Copyright © Unpublished Work - See title page for details

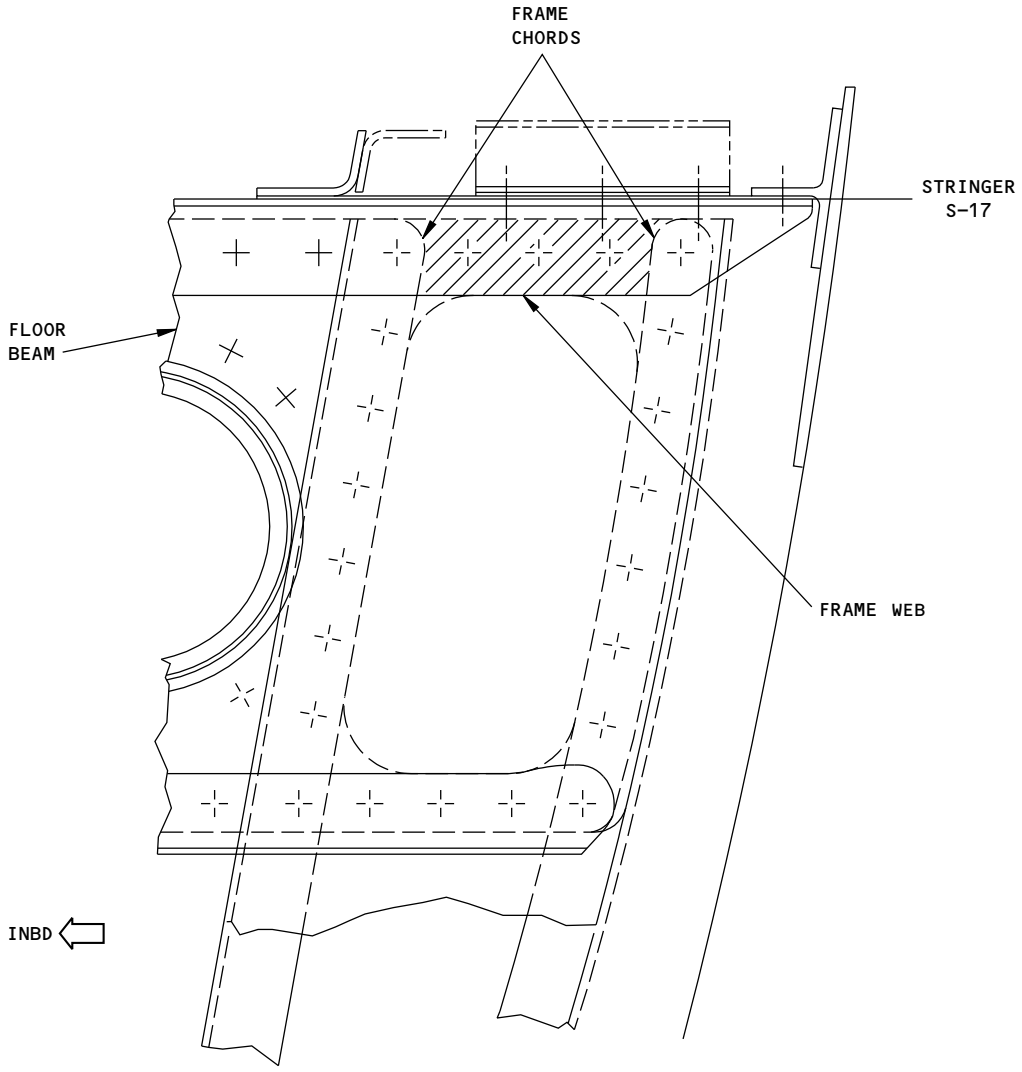

REAR VIEW OF STATION 312 SHOWN
STATION 328 IS EQUIVALENT

INSPECTION AREA ON FRAME WEB

NOTE

- THE SURFACE INSPECTION OF THE FRAME WEBS IS DONE ON THE FORWARD SIDE OF THE FRAME WEBS AT BS312 AND BS328 BETWEEN THE FRAME CHORDS

2159811 S0000472148_V1

Frame Webs to be Examined by Surface Eddy Current Inspection
Figure 3

BOEING PROPRIETARY - Copyright © Unpublished Work - See title page for details

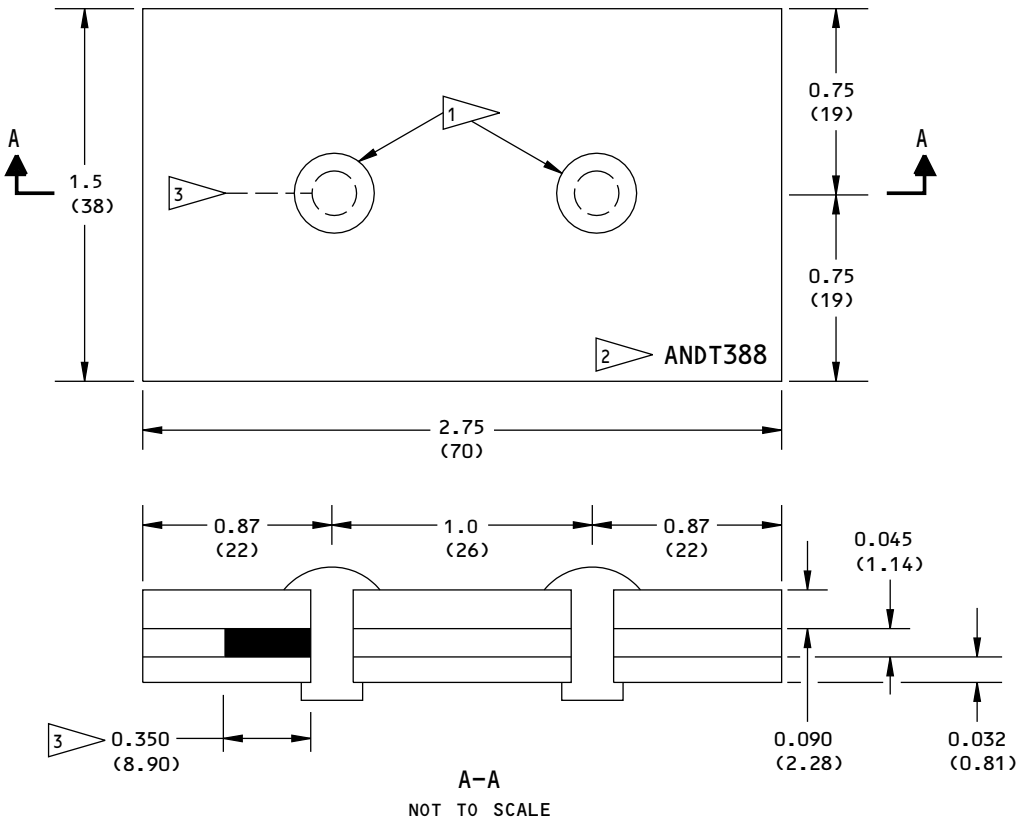

NOTES:

- MATERIAL: 7075-T6 BARE OR CLAD
- ALL DIMENSIONS ARE IN INCHES (MILLIMETERS IN PARENTHESES)
- DIMENSION TOLERANCE:

INCHES	MILLIMETERS
X.XXX = ±0.005	X.XX = ±0.1
X.XX = ±0.025	X.X = ±0.5
X.X = ±0.050	X = ±1

1 FASTENERS: 1/4 INCH DIAMETER RIVETS BACR15BB8* OR EQUIVALENT. THESE RIVETS MUST HAVE A CONVERSION COATED (ALODINED) FINISH. TO MAKE SURE THE FINISH IS ALODINE, REFER TO PART 1, 51-06-01. INSTALL THE RIVETS AS SPECIFIED IN PART 1, 51-01-04.

2 ETCH OR STAMP PART NUMBER ANDT388. PUT A LETTER "A" IN FRONT OF THE REFERENCE STANDARD NUMBER TO SHOW THAT IT HAS ALODINED RIVETS. SEE FLAGNOTE 1.

3 EDM NOTCH OR JEWELER'S SAWCUT:
LENGTH: 0.350 (8.90)
DEPTH: 0.045 (1.14)
MAXIMUM WIDTH: 0.025 (0.635)
NOTCH TOLERANCE:
LENGTH: ±0.035
DEPTH: THROUGH THICKNESS

2159834 S0000472150_V1

Reference Standard for the Subsurface Inspection of the Frame Web Through the Floor Beam Web Immediately Below Stringer 17 - From BS 259.5 to BS 540
Figure 4

BOEING PROPRIETARY - Copyright © Unpublished Work - See title page for details

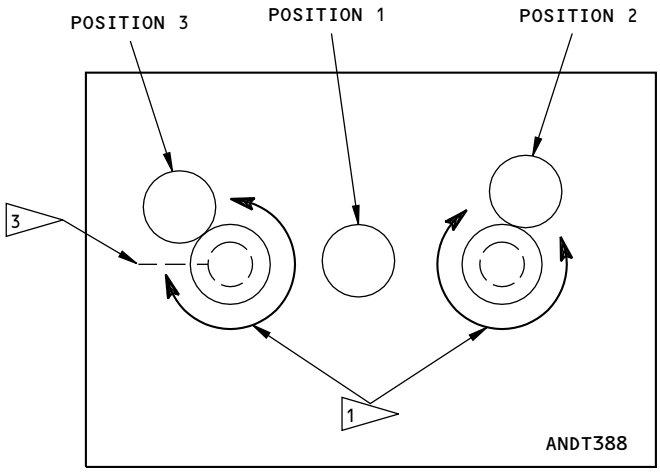

DETAIL I

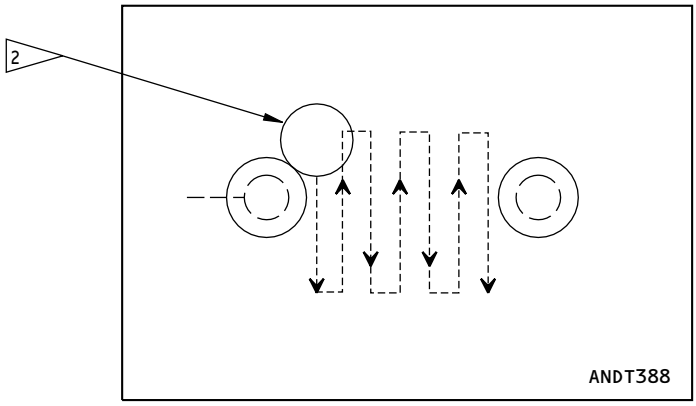

DETAIL II

NOTES

- REFERENCE STANDARD ANDT388 IS USED TO DO THE SUBSURFACE INSPECTIONS OF THIS PROCEDURE ONLY.
- REFERENCE STANDARD 126, SHOWN IN PART 6, 51-00-00, PROCEDURE 4, IS USED TO DO THE SURFACE INSPECTIONS OF THIS PROCEDURE.

1 MOVE THE PROBE 360 DEGREES AROUND THE FASTENERS DURING THE CALIBRATION.

2 DURING THE INSPECTION, DO THE SCAN IN AN UP AND DOWN DIRECTION BETWEEN THE FASTENERS AND AROUND THE LOWER HALF OF THE FASTENERS.

3 NOTCH

2159840 S0000472151_V2

Calibration Probe Positions on Reference Standard ANDT388 For the Subsurface Inspection
Figure 5

BOEING PROPRIETARY - Copyright © Unpublished Work - See title page for details

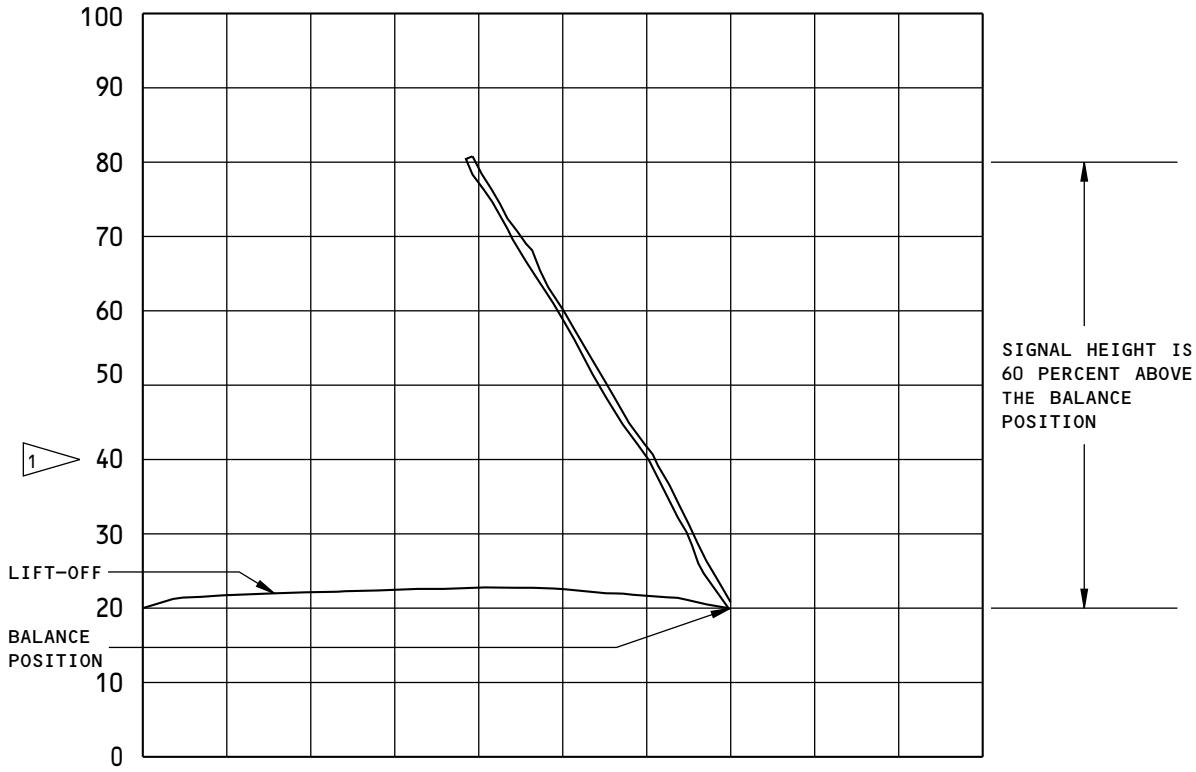

IMPEDANCE PLANE DISPLAY. AN 80 PERCENT FULL SCREEN HEIGHT INDICATION FROM THE REFERENCE NOTCH IS SHOWN. (60 PERCENT ABOVE THE BALANCE POSITION.)

NOTES

- BALANCE THE INSTRUMENT AND SET THE SIGNAL TO 20 PERCENT FULL SCREEN HEIGHT
- ADJUST THE SENSITIVITY TO GET AN 80 PERCENT FULL SCREEN HEIGHT INDICATION FROM THE REFERENCE NOTCH
- DIFFERENT VERTICAL/HORIZONTAL GAIN RATIOS WILL CHANGE THE PHASE ANGLE OF THE SIGNAL

1 DURING THE INSPECTION, AN INDICATION THAT IS 20 PERCENT OR MORE ABOVE THE BALANCE POSITION IS A POSSIBLE CRACK INDICATION

2159846 S0000472153_V1

Impedance Plane Display for the Subsurface Inspection
Figure 6

BOEING PROPRIETARY - Copyright © Unpublished Work - See title page for details

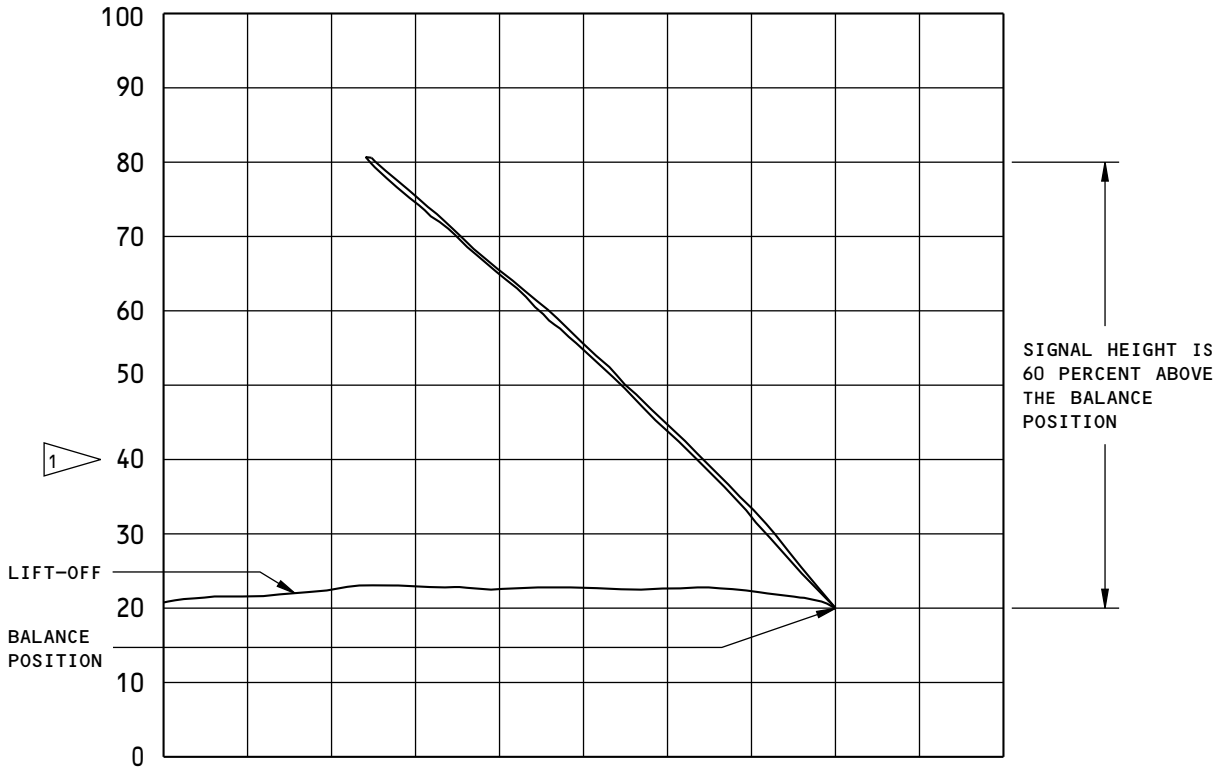

IMPEDANCE PLANE DISPLAY. AN 80 PERCENT FULL SCREEN HEIGHT INDICATION FROM THE REFERENCE NOTCH IS SHOWN. (60 PERCENT ABOVE THE BALANCE POSITION.)

NOTES

- BALANCE THE INSTRUMENT AND SET THE SIGNAL TO 20 PERCENT FULL SCREEN HEIGHT
- ADJUST THE SENSITIVITY TO GET AN 80 PERCENT FULL SCREEN HEIGHT INDICATION FROM THE REFERENCE NOTCH
- DIFFERENT VERTICAL/HORIZONTAL GAIN RATIOS WILL CHANGE THE PHASE ANGLE OF THE SIGNAL

1 DURING THE INSPECTION, AN INDICATION THAT IS 20 PERCENT OR MORE ABOVE THE BALANCE POSITION IS A POSSIBLE CRACK INDICATION

2159861 S0000472154_V1

Impedance Plane Display for the Surface Inspection
Figure 7

BOEING PROPRIETARY - Copyright © Unpublished Work - See title page for details

PART 6 - EDDY CURRENT

AFT PRESSURE BULKHEAD - WEB LAP SPLICES

1. Purpose

A. Use this procedure to do a surface eddy current inspection to find cracks between the fasteners in the web lap splices. The inspection areas are the fastener locations in the web lap splices that are on the aft side of the aft pressure bulkhead. Only one of the two rows of fasteners at each web lap splice are necessary for inspection. See Figure 1.

B. This procedure uses an instrument with an impedance plane display or a meter display.

C. 737 Supplemental Structural Inspection Document (D6-37089 for 737-100/200) Reference:

(1) Item: F-30D

D. 737 Supplemental Structural Inspection Document (D6-82669 for 737-300/400/500) Reference:

(1) Item: F-30I

2. Equipment

A. General

(1) Use inspection equipment that can be calibrated on the reference standard as specified in Paragraph 4.

(2) Refer to Part 1, 51-01-00, for data about the equipment manufacturers.

B. Instrument, Probes and Reference Standard

(1) Refer to Part 6, 51-00-00, Procedure 4 (if a meter display instrument is used) or Part 6, 51-00-00, Procedure 23 (if an impedance plane display instrument is used) for the instrument, probe and reference standards to use.

3. Prepare for the Inspection

A. Get access to the inspection area through the access door (P25) immediately aft of the aft pressure bulkhead.

B. Identify all inspection areas. See Figure 1.

C. Clean the inspection area.

(1) Remove sealant as necessary.

(2) Remove paint only if it is loose.

4. Instrument Calibration

A. Calibrate the instrument as specified in Part 6, 51-00-00, Procedure 4 (if a meter display instrument is used) or Part 6, 51-00-00, Procedure 23 (if an impedance plane display instrument is used).

5. Inspection Procedure

A. Calibrate the instrument as specified in Paragraph 4.

B. Examine the fastener locations identified in Figure 1 for the seven web lap splice locations. Refer to the inspection instructions for protruding-head fasteners in Part 6, 51-00-00, Procedure 4 (if a meter display instrument is used) or Part 6, 51-00-00, Procedure 23 (if an impedance plane display instrument is used).

BOEING PROPRIETARY - Copyright © Unpublished Work - See title page for details

6. **Inspection Results**

A. Refer to the applicable inspection procedure for data to help make an analysis of the inspection results.

BOEING PROPRIETARY - Copyright © Unpublished Work - See title page for details

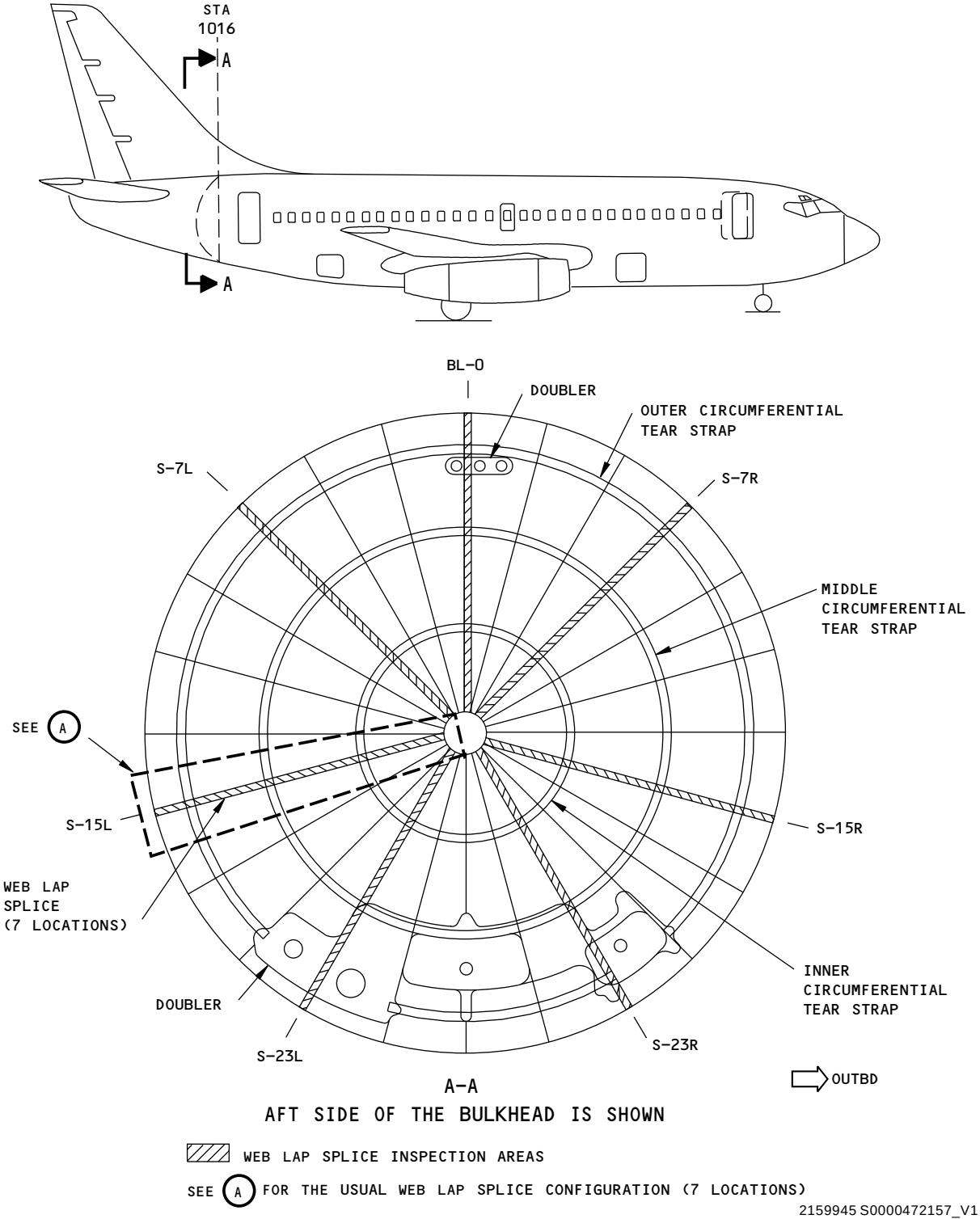

Aft Pressure Bulkhead - Web Splice Inspection Areas
Figure 1 (Sheet 1 of 2)

BOEING PROPRIETARY - Copyright © Unpublished Work - See title page for details

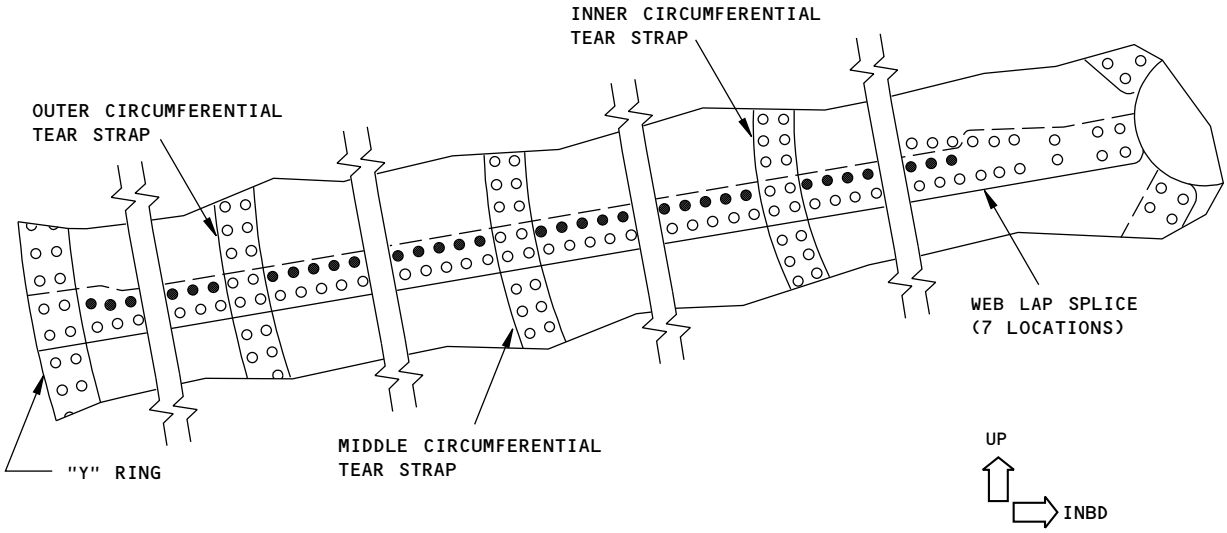

AFT SIDE OF THE BULKHEAD IS SHOWN

NOTES:

- ● USUAL FASTENER LOCATIONS TO EXAMINE
- • THIS FIGURE IS NOT TO SCALE
- • THIS FIGURE DOES NOT SHOW ALL OF THE FASTENER LOCATIONS TO EXAMINE. IT IS POSSIBLE THAT THE WEB LAP SPLICES ON THE AIRPLANE HAVE FASTENER CONFIGURATIONS THAT ARE DIFFERENT THAN THAT SHOWN IN THIS FIGURE.

2159946 S0000472158_V1

Aft Pressure Bulkhead - Web Splice Inspection Areas
Figure 1 (Sheet 2 of 2)

BOEING PROPRIETARY - Copyright © Unpublished Work - See title page for details

PART 6 - EDDY CURRENT

NOSE WHEEL WELL STATION 294.5 - INSPECTION OF THE AFT WEB AT LBL 6.12 AND RBL 7.50

1. Purpose

A. This subsurface eddy current procedure can find cracks in the aft web of the nose wheel well at station 294.5 at LBL 6.12 and RBL 7.50. The inspection is done on the forward side of the aft web. The probe is put on the reinforcement straps to find vertical cracks in the aft web. The crack length that can be found is 0.300 inch (7.60 mm) or longer. See Figure 1 for the inspection areas.

B. This inspection procedure is for instruments that have impedance plane displays or meter displays.

C. Service Bulletin Reference: 737-53-1079

2. Equipment

NOTE: Refer to Part 1, 51-01-00, for data about the equipment manufacturers.

A. Instruments

(1) All eddy current instruments that have impedance plane display or meter display are permitted for use if they:

(a) Can operate at a frequency of 4 kHz or 5 kHz.

(b) Can find the reference notch in the reference standard during the calibration specified in this procedure.

(c) The instruments specified below were used to help prepare this procedure:

1) NDT 19; Nortec/Staveley

2) AV 100; Hocking/Krautkramer

3) MIZ 10A/B; Zetec

B. Probes

(1) Only one shielded spot probe is necessary to do this inspection. The probe must operate at a frequency of 4 or 5 kHz. The maximum diameter of the probe is 0.55 inch (14 mm).

(2) The probes specified below operated satisfactorily when this procedure was prepared. Other probes can be used if they agree with the conditions of this procedure:

(a) SPO-1071 5 kHz; Nortec/Staveley

(b) VM 112; VM Products

(c) VM 112R; VM Products

C. Reference Standards - Make reference standard NDT391 as specified in Figure 2.

3. Prepare for the Inspection

A. Prepare for the subsurface inspection of the aft web of the nose wheel well as follows:

(1) Make sure that the instrument, probe, reference standard and inspection areas are at the same temperature.

(2) Get access to the inspection location at the forward side of the aft web of the nose wheel well. This is the forward side of Station 294.5.

(3) Make sure that the reinforcement straps at LBL 6.12 and RBL 7.50 are clean. See Figure 1.

BOEING PROPRIETARY - Copyright © Unpublished Work - See title page for details

4. **Instrument Calibration**

NOTE: Refer to the instruments instruction manual for the instrument operation instructions.

A. Calibrate instruments that have an impedance plane display to do the subsurface inspection as specified below. See Figure 3 and Figure 4.

NOTE: The vertical gain can be higher than the horizontal gain. This will make the signal more stable and give a more vertical signal on the screen.

(1) Set the instrument frequency at 4 or 5 kHz.

(2) Put the probe at position 1 on reference standard NDT391. See Figure 3.

(3) Balance the instrument.

(4) Set lift-off so that the signal goes horizontally to the left. See Figure 4.

(5) Put the probe on reference standard NDT391 adjacent to the fastener head that does not have a notch adjacent to it. See Figure 3, position 2.

(6) Balance the instrument again.

(7) Adjust the position of the balanced signal so that it is at 20 percent full screen height. See Figure 4.

(8) Put the probe on reference standard NDT391 adjacent to the fastener head that has a notch adjacent to it. See Figure 3, position 3.

(9) Move the probe around this fastener to make a scan. Adjust the instrument sensitivity to get a vertical indication that is 80 percent of full screen height (60 percent of full screen height higher than the balance position). See Figure 3 and Figure 4.

(10) Balance the instrument again and make sure the lift-off signal moves horizontally to the left. See Figure 4.

B. Calibrate instruments that have a meter display to do the subsurface inspection as specified below. See Figure 3 and Figure 4.

(1) Set the instrument frequency at 4 or 5 kHz.

(2) Put the probe at position 1 on reference standard NDT391. See Figure 3.

(3) Balance the instrument.

(4) Set lift-off at position 1, Figure 3. Set lift-off so that the meter needle moves no more than 5 percent of full scale for probe-to-part distances of up to 0.006 inch (the thickness of two sheets of paper).

(5) Put the probe on reference standard NDT391 adjacent to the fastener head that does not have a notch adjacent to it. See Figure 3, position 2.

(6) Balance the instrument again.

(7) Adjust the meter position control to set the meter needle to 20 percent of full scale. See Figure 4.

(8) Put the probe on reference standard NDT391 adjacent to the fastener head that has a notch adjacent to it. See Figure 3, position 3.

(9) Move the probe around this fastener to make a scan. Adjust the instrument sensitivity to get a meter response which is 80 percent of full scale. (60 percent of full scale higher than the balance position). See Figure 4.

(10) Balance the instrument again and make sure the lift-off is set as specified in Paragraph 4.A.(4).

BOEING PROPRIETARY - Copyright © Unpublished Work - See title page for details

5. **Inspection Procedure**

A. Do the subsurface inspection of the aft web of the nose wheel well at station 294.5 at LBL 6.12 and RBL 7.50 as follows:

(1) Calibrate the equipment as specified in Paragraph 4.

(2) Put the probe on the reinforcement strap at LBL 6.12 adjacent to a fastener head.

(3) Balance the instrument.

(4) Do a scan with the probe between the fasteners shown in Figure 1. Do the scan 360 degrees around all the fasteners that attach the reinforcement strap to the aft web. Also, do the scan in a horizontal direction between the fastener rows from the edge of the reinforcement strap to the other edge.

(5) Do Paragraph 5.A.(1) thru Paragraph 5.A.(4) again on the reinforcement strap installed at RBL 7.50.

6. **Inspection Results**

A. Inspection results for instruments that have impedance plane display:

(1) Vertical indications that are 20 percent or more higher than the balance position are possible crack indications. Crack indications occur during a short scan. Compare all indications to the indications from the reference notch on the reference standard.

NOTE: A slow, vertical indication can be caused by a large separation between the layers. This type of indication shows on the impedance plane screen during a long scan. Compare these indications to the reference notch indications that show quickly on the screen during a short scan.

B. Inspection results for instruments that have meter display:

(1) Upscale indications that are 20 percent or more higher than the balance position are possible crack indications. Crack indications occur during a short scan. Compare all indications to the indications from the reference notch on the reference standard.

NOTE: A slow upscale indication can be caused by a large separation between the layers. This type of indication shows on the meter during a long scan. Compare these indications to the reference notch indications that show quickly on the meter during a short scan.

C. If necessary, do more analysis in the area of crack indications as follows:

(1) Remove the fastener and do a surface eddy current inspection of the fastener hole as specified in Part 6, 51-00-00, Procedure 16.

BOEING PROPRIETARY - Copyright © Unpublished Work - See title page for details

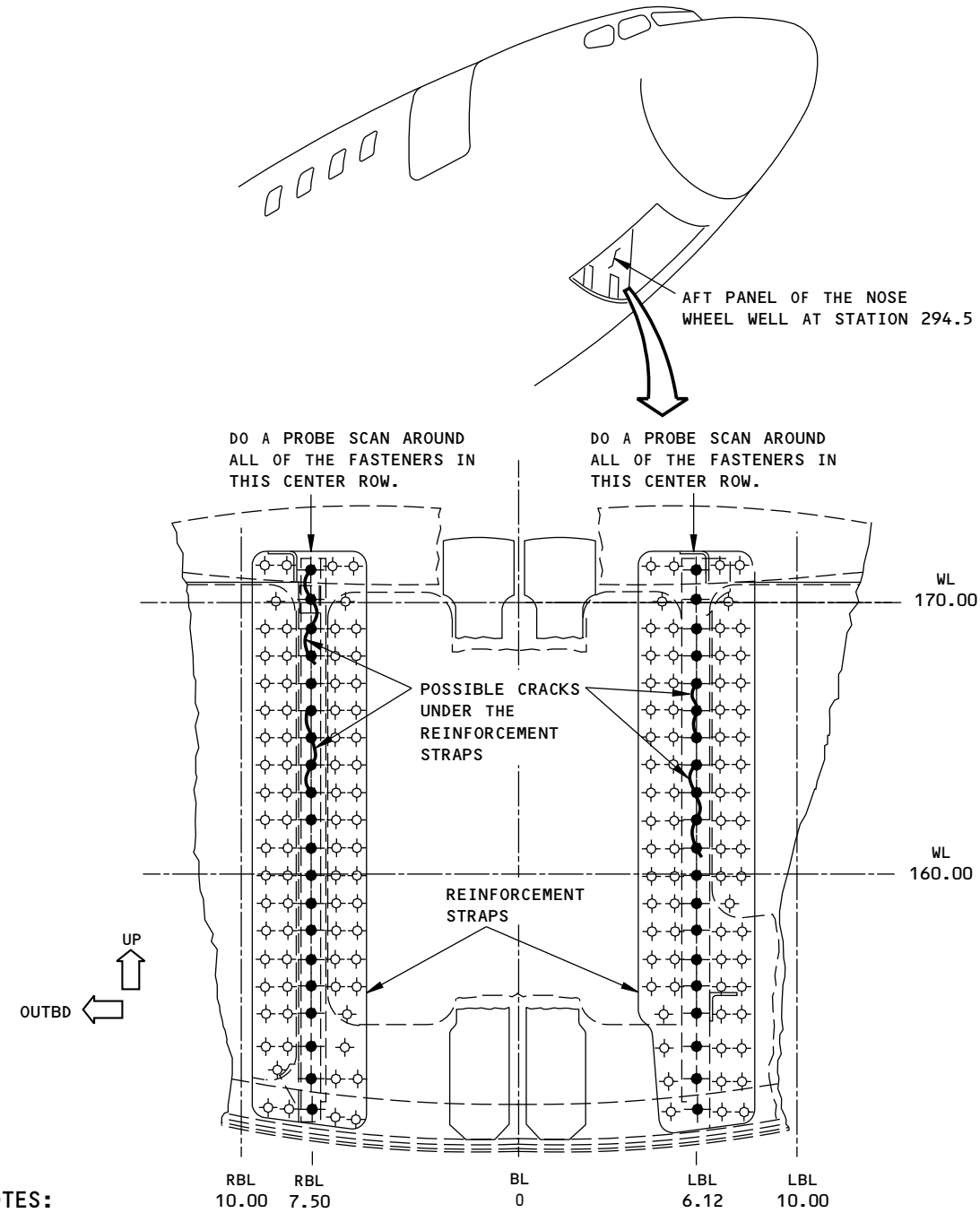

NOTES:

- THIS VIEW IS FROM THE FORWARD SIDE OF THE AFT PANEL AS YOU LOOK AFT.
- DO A CIRCULAR PROBE SCAN AROUND ALL OF THESE FASTENERS. THESE FASTENERS ARE IN THE CENTER ROW OF THE TWO REINFORCEMENT STRAPS.
- THERE ARE TWENTY FASTENERS IN THE CENTER ROW OF EACH REINFORCEMENT STRAP. IT IS NECESSARY TO DO A PROBE SCAN AROUND THESE FASTENERS.

2159800 S0000472161_V1

Inspection Area at the Reinforcement Straps at Station 294.5
Figure 1

BOEING PROPRIETARY - Copyright © Unpublished Work - See title page for details

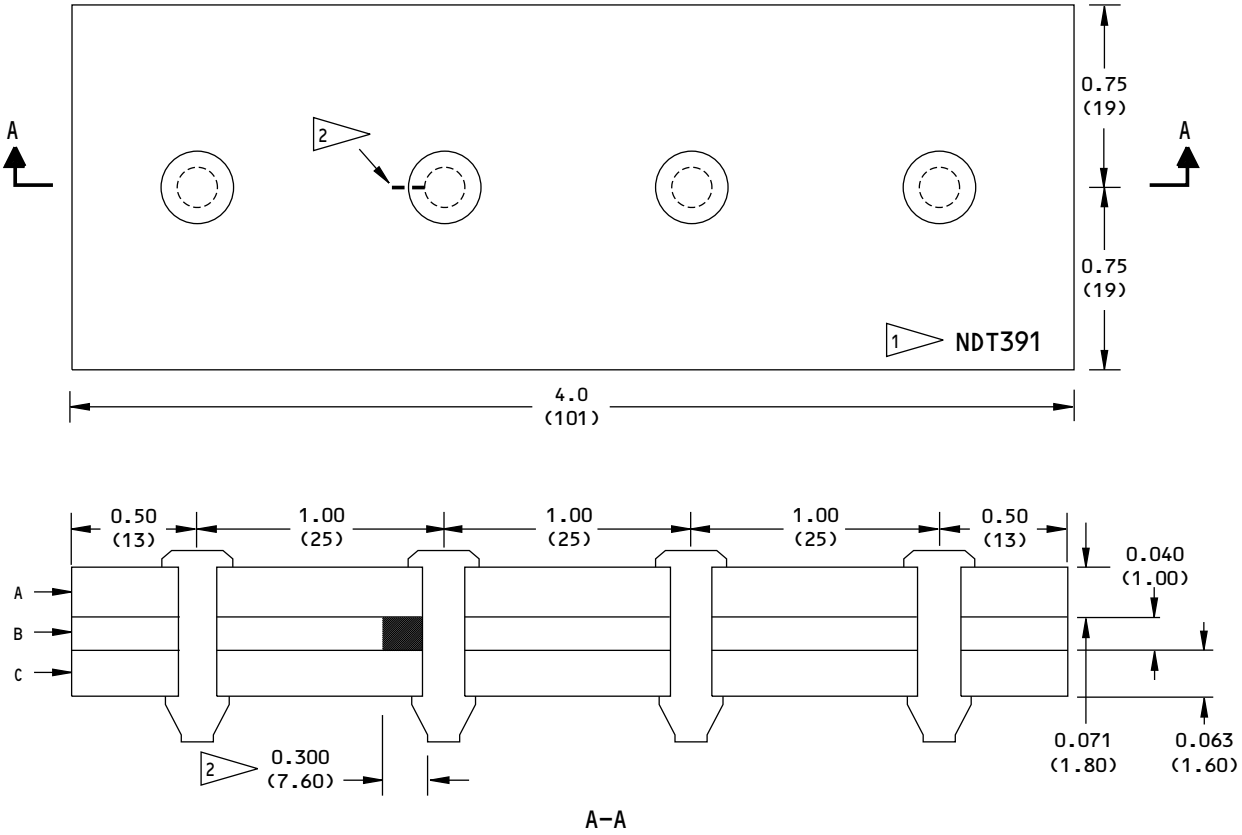

NOTES:

- ALL DIMENSIONS ARE IN INCHES (MILLIMETERS IN PARENTHESES).

- DIMENSION TOLERANCE (UNLESS SPECIFIED DIFFERENTLY):

INCHES	MILLIMETERS
X.XXX = ±0.005	X.XX = ±0.1
X.XX = ±0.025	X.X = ±0.5
X.X = ±0.050	X = ±1

- MATERIAL:
  (A) 2024-T3/T4 CLAD OR BARE, OR A MATERIAL WITH AN EQUIVALENT CONDUCTIVITY RANTE
  (B) 2024-T3/T4 CLAD OR BARE, OR A MATERIAL WITH AN EQUIVALENT CONDUCTIVITY RANGE
  (C) 2024-T3/T4 CLAD OR BARE, OR A MATERIAL WITH AN EQUIVALENT CONDUCTIVITY RANGE
  FASTENERS: BACB30FM6A3 - DIAMETER 0.187 (4.7)
  COLLARS: BACC30M6U OR EQUIVALENT

1 ETCH OR STAMP THE REFERENCE STANDARD PART NUMBER NDT391

2 EDM NOTCH OR JEWELERS' SAWCUT:
LENGTH: 0.300 ± 0.030 (7.60 ± 0.76)
MAXIMUM WIDTH: 0.025 (0.63)
DEPTH: THROUGH THE 0.040 (1.00) PLATE THICKNESS

2159802 S0000472162_V1

Reference Standard NDT391
Figure 2

BOEING PROPRIETARY - Copyright © Unpublished Work - See title page for details

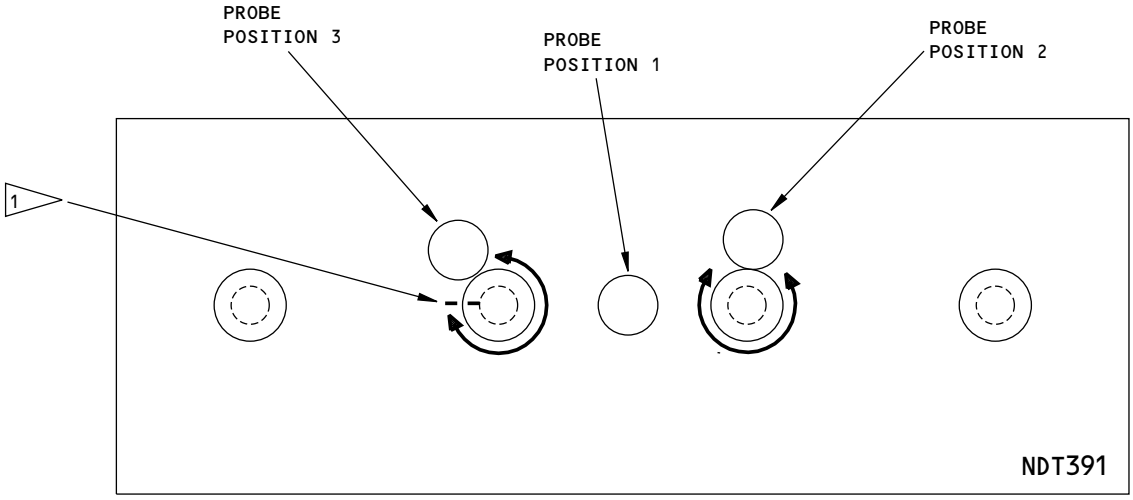

NOTES:

- MOVE THE PROBE 360 DEGREES AROUND THE FASTENERS TO DO THE SCAN.
- THE SCAN SPEED USED DURING THE CALIBRATION MUST BE THE SAME DURING THE INSPECTION.

1 REFERENCE NOTCH/SAWCUT

2159804 S0000472163_V1

Calibration Positions on Reference Standard NDT391
Figure 3

BOEING PROPRIETARY - Copyright © Unpublished Work - See title page for details

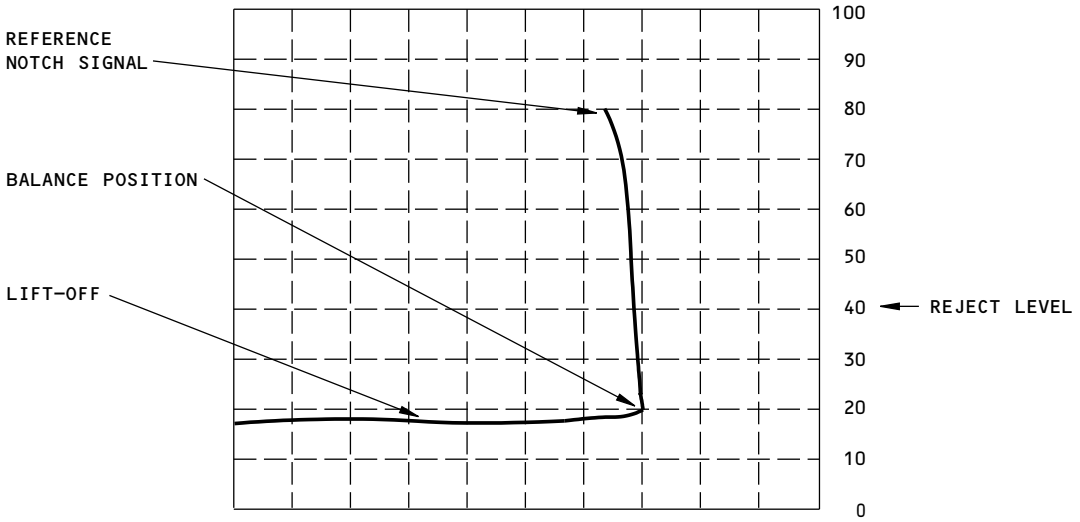

IMPEDANCE PLANE DISPLAY

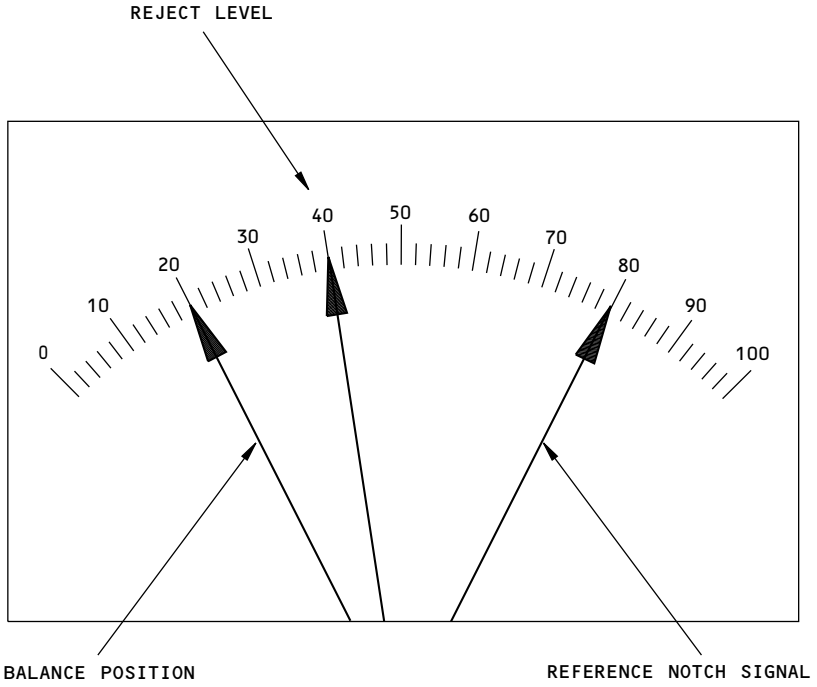

METER DISPLAY

2159807 S0000472165_V1

Instrument Displays of Notch Signals
Figure 4

BOEING PROPRIETARY - Copyright © Unpublished Work - See title page for details

PART 6 - EDDY CURRENT

FUSELAGE CROWN STRINGERS

1. **Purpose**

   A. To examine the fastener locations of the crown stringers for cracks that are in the direction across the stringer. This inspection uses low frequency eddy current and a specially designed reflection sliding probe with 3 coils. The inspection is done from the outer skin surface with an impedance plane display instrument. See Figure 1.

   B. Figure 1 identifies the general inspection areas for the -100, -200, and -200C model airplanes. The specific configuration data for the inspection areas that are examined by this procedure are shown in Figure 6, Figure 7, Figure 8 and Figure 9. Figure 6 is for the -100 airplanes, Figure 7 is for the -200 airplanes. Figure 8 is a detailed view for the -100 and -200 airplanes and Figure 9 is for the -200C airplanes.

   C. As an alternative to this external subsurface eddy current procedure, an internal surface eddy current inspection can be done on the stringer surface around each fastener that goes through the skin and the stringer.

   D. This procedure can be used to examine crown stringers with anodized and Alodined rivets.

   E. 737 Supplemental Structural Inspection Document (D6-37089) Reference:

      (1) Item: F-39A

      (2) Item: F-39B

      (3) Item: F-39C

2. **Equipment**

   NOTE: Refer to Part 1, 51-01-00, for data about the manufacturers of the equipment.

   A. Instrument - All eddy current, impedance plane display instruments are permitted for use if they:

      (1) Can operate at 3 kHz.

      (2) Can satisfactorily do the calibration instructions specified in this procedure. The instruments that follow were used to help prepare this procedure.

         (a) MIZ-20A, MIZ-22; Zetec, Inc.

         (b) NDT-19, NDT-19E; Nortec/Staveley, Inc.

         (c) Phasec 2200; Hocking/Krautkramer

   B. Probes - It is necessary to use the special probe that was made for this inspection. The probe that follows was used to help prepare this procedure.

      (1) NEC-1099; NDT Engineering Corp.

   C. Reference Standard - Make reference standards NDT3090A, NDT3090B, and NDT3090C as specified in Figure 2 and Figure 3.

   D. Probe Guide - Use a nonconductive straight edge as a probe guide during this inspection.

3. **Prepare for the Inspection**

   A. Make sure the inspection areas on the skin shown in Figure 1 at the stringer locations are clean.

   B. Make sure the rivets on the skin at the stringer locations can be seen. If the rivets cannot be seen because of too much paint, remove sufficient paint so the rivets can be seen.

BOEING PROPRIETARY - Copyright © Unpublished Work - See title page for details

4. **Instrument Calibration**

A. Refer to Figure 1 for the airplane model to be examined. Figure 1 identifies the applicable figure and sheet numbers that show each models' inspection area(s). All of the inspection area(s) are identified by a pattern. Refer to the inspection areas identified in the notes of Figure 6 thru Figure 9 for each pattern to find the correct reference standard for each inspection area.

B. Set the instrument frequency to 3 kHz for the calibration with all of the reference standards (NDT3090A, B and C).

C. Put the probe on the reference standard at probe position 1 as shown in Detail II in Figure 4.

D. Balance the instrument.

E. Set the vertical gain so it is approximately 6 to 10 dB higher than the horizontal gain.

F. Set the balance point in the lower right area of the screen display at 30 percent of full screen height. See Detail I in Figure 4.

G. Set the lift-off signal so that it is equivalent to the lift-off signal shown in Detail I in Figure 4.

H. Put the probe guide on the reference standard against the probe and align the probe guide with the fasteners. Make sure the centerline of the probe is aligned with the centerline of the rivets.

I. Move the probe from position 1 to position 2 shown in Detail II in Figure 4.

J. Adjust the gain and phase angle controls to get the notch signal (between probe position 1 and 2) to occur as shown in Detail I in Figure 4.

K. Do all of the probe scans shown in Figure 4 and Figure 5. These scans will show you signals that will occur with different conditions. These conditions are as follows:

(1) Probe scans from positions 1 to 2 in Figure 4 give the notch signal for the calibration.

(2) Probe scans from positions 3 to 4 in Detail I in Figure 5 show a crack signal at an anodized rivet location.

(3) Probe scans from positions 5 to 6 in Detail II in Figure 5 show how a signal from an anodized rivet will look when the probe centerline is aligned with the centerline of the anodized rivets.

(4) Probe scans from positions 7 to 8 in Detail II in Figure 5 show how a signal from an Alodined rivet will look when the probe centerline is aligned with the centerline of the Alodined rivets.

(5) Probe scans from positions 9 to 10 in Detail III in Figure 5 show how the rivet signals look when the probe centerline is not aligned with the centerline of the anodized rivets. If this type of signal occurs during a scan, center the probe on the rivets and do the scans again.

(6) Probe scans from positions 11 to 12 in Detail III in Figure 5 show how the rivet signals look when the probe centerline is not aligned with the centerline of the Alodined rivets. If this type of signal occurs during a scan, center the probe on the rivets and do the scans again.

5. **Inspection Procedure**

A. Do an inspection of the areas identified in Figure 1, Figure 6, Figure 7, Figure 8 and/or Figure 9 for the airplane model to be examined.

NOTE: Areas to be examined are identified in the figures by a pattern on the stringer locations. This pattern is related to the reference standard to use for the calibration. It is not necessary to examine areas that do not have a pattern at the stringer locations.

(1) Calibrate the instrument as specified in Paragraph 4.

BOEING PROPRIETARY - Copyright © Unpublished Work - See title page for details

(2) Put the probe on the airplane skin. Align the center of the probe with the row of the stringer fasteners to be examined. Space the probe equally between two fasteners and balance the instrument. See Figure 10 which shows a usual location to balance the instrument. Use the data in Figure 10 for how to start a scan near the end of a stringer.

(3) Position the probe guide on the airplane against the probe and align the probe and probe guide so the centerline of the probe is aligned with the centerline of the rivets.

(4) Do a scan inspection of all the fastener locations identified. Monitor the screen display for crack signals that are equivalent to the reference standard notch signals shown in Figure 4. Also, monitor the instrument and the rivets to be examined for the conditions that follow:

(a) A change of the location of the balance point in the screen display will occur at different locations. Some of the known locations are: stringer splices, tear straps, skin doublers, and tapered shims. These locations cause a sudden change in the balance point location during a short scan distance. Gaps between the skin and stringer and stringer thickness changes (tapered stringers) can cause a slow change in the balance point location during a longer scan distance, but it is not known where all these locations are. Monitor the screen display during all scan inspections for changes of the balance point location and balance the instrument as necessary.

(b) A probe scan is done correctly when the center of the probe goes across the center of the rivets. When there is no crack, the rivet signals will look equivalent to the signals shown in Detail II in Figure 5. If the probe is not at the center of the rivets, the signals will look equivalent to the signals shown in Detail III in Figure 5. When these types of signals occur, center the probe on those rivets and do the scans again.

NOTE: Most of the rivets installed at the stringer locations are 0.156 inch (3.97 mm) diameter rivets but some of the rivets are 0.188 inch (4.76 mm) diameter rivets. It is not necessary to do a special calibration for the larger rivets.

6. Inspection Results

A. Vertical signals that are 20 percent of full screen height (or more) above the balance point are indications of possible cracks. See Figure 4. Do a check to see if the indications are from cracks. Do the check as follows:

(1) When a possible crack indication occurs, make sure the probe center is aligned with the center of the rivet and do the probe scan again. See Detail III in Figure 5 to see how the signals look when the centerline of the probe is not aligned with the centerline of the rivets during the scans.

(2) It is possible the vertical signals are from the conditions identified in Paragraph 4.K. For example, at tear strap edge locations there is a bend in the stringer that causes a gap between the stringer and the skin. This condition will cause a vertical indication.

(3) Do an internal surface eddy current inspection on the stringer around the rivet that gave the indication at areas that cause crack-type signals to occur. Do the inspection as specified in Part 6, 51-00-00, Procedure 4, or Part 6, 51-00-00, Procedure 23.

BOEING PROPRIETARY - Copyright © Unpublished Work - See title page for details

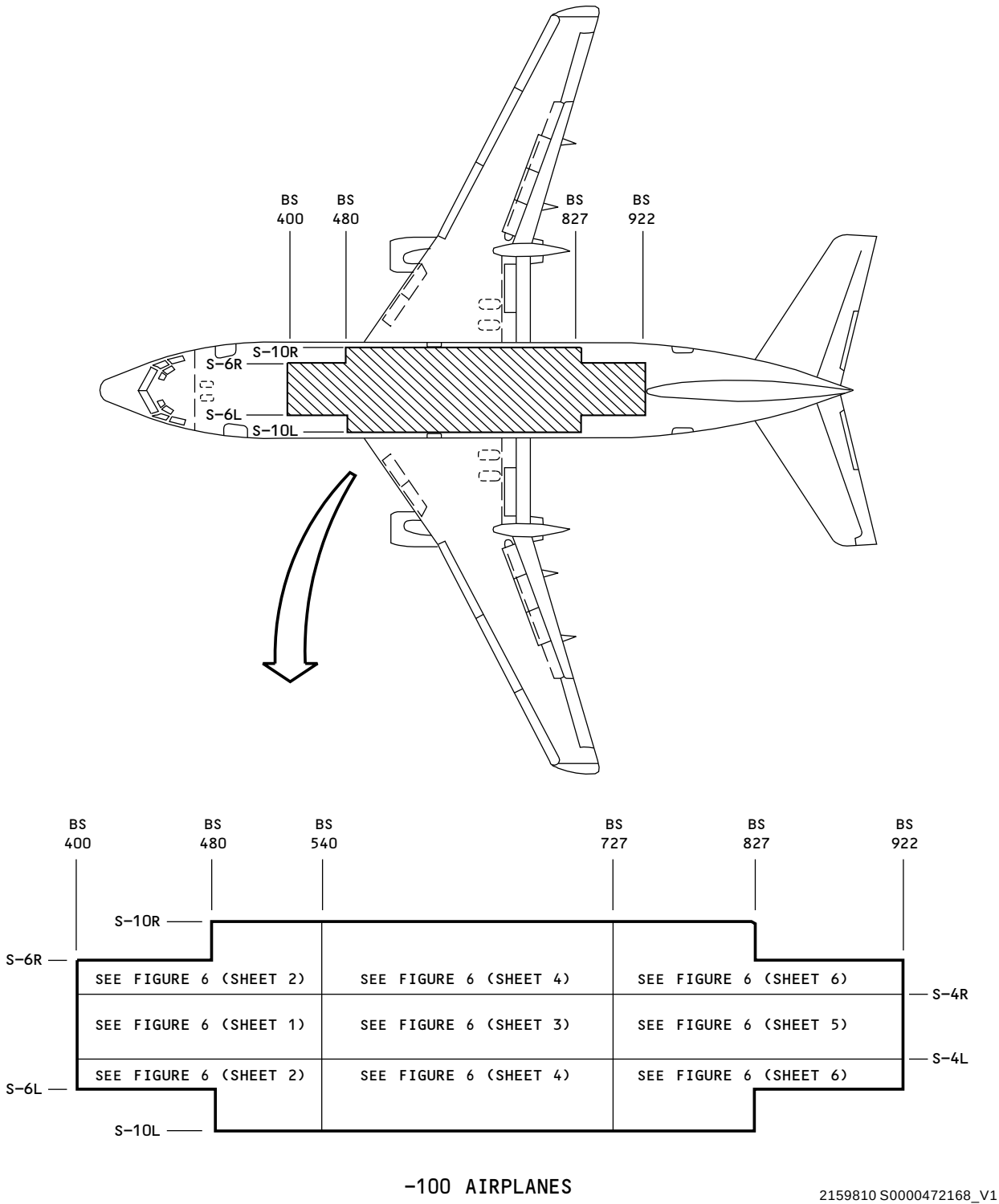

Fuselage Crown Stringer Inspection Areas
Figure 1 (Sheet 1 of 3)

BOEING PROPRIETARY - Copyright © Unpublished Work - See title page for details

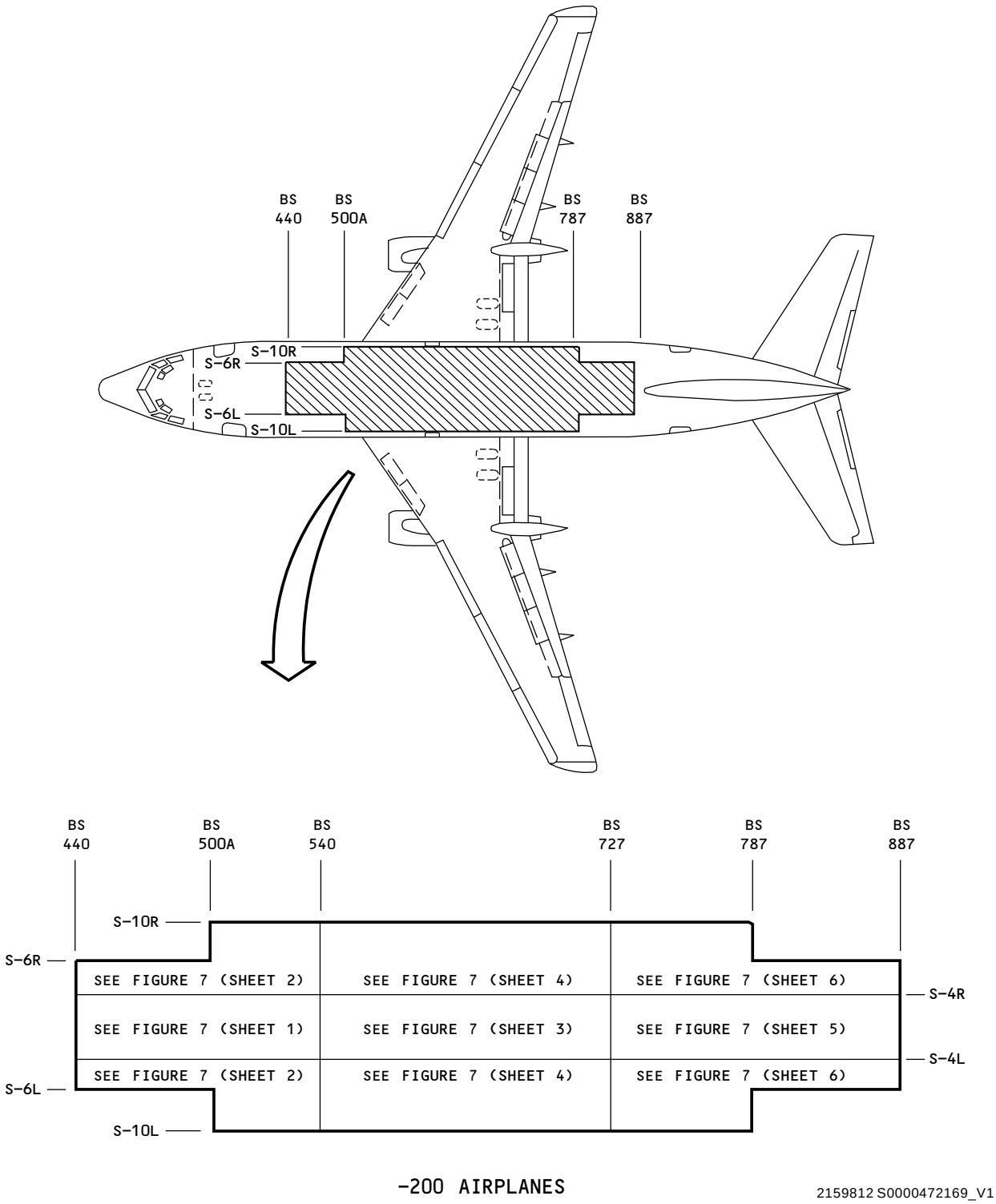

Fuselage Crown Stringer Inspection Areas
Figure 1 (Sheet 2 of 3)

BOEING PROPRIETARY - Copyright © Unpublished Work - See title page for details

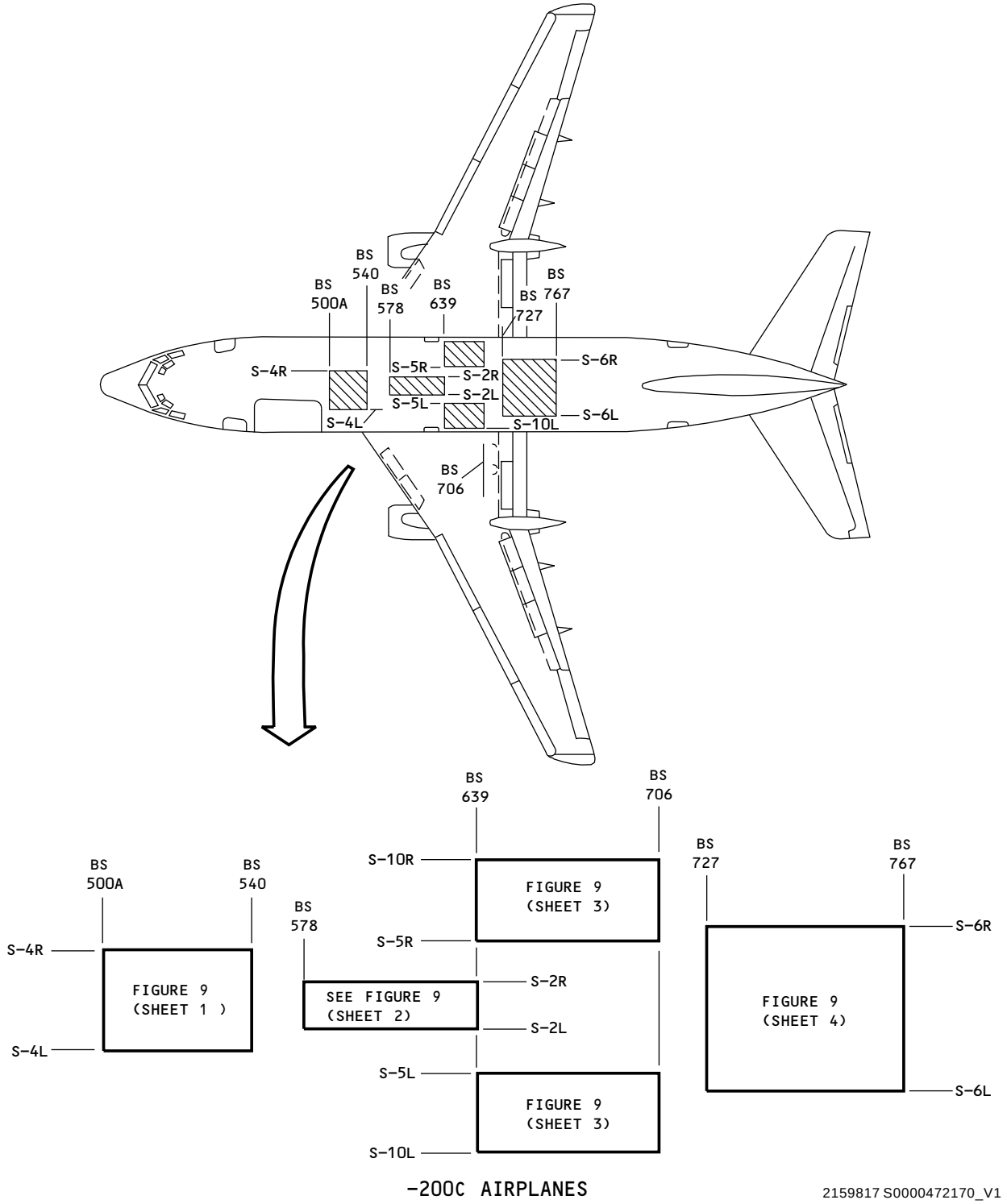

Fuselage Crown Stringer Inspection Areas
Figure 1 (Sheet 3 of 3)

BOEING PROPRIETARY - Copyright © Unpublished Work - See title page for details

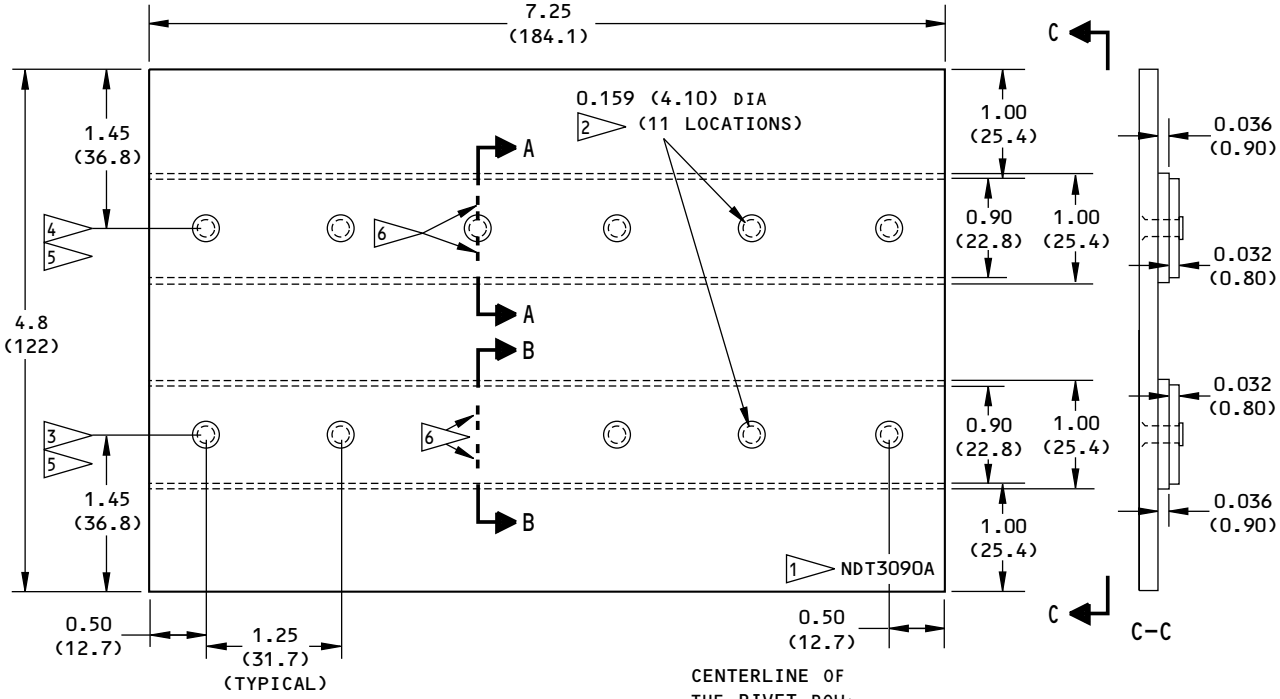

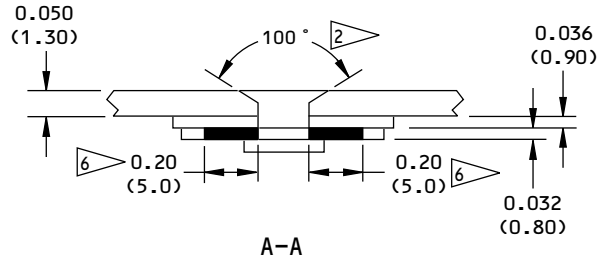

A-A

VIEW TURNED 90 DEGREES
(NOT TO SCALE)

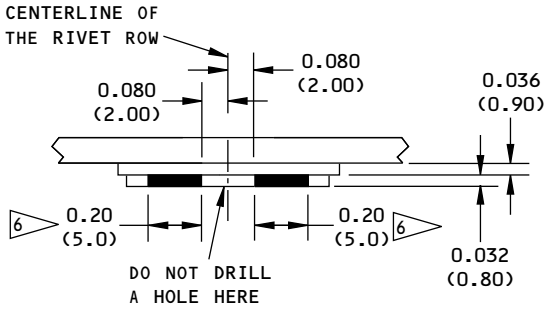

B-B

VIEW TURNED 90 DEGREES
(NOT TO SCALE)

NOTES:

- ALL DIMENSIONS ARE IN INCHES (MILLIMETERS ARE IN PARENTHESES)
- TOLERANCE (UNLESS SPECIFIED DIFFERENTLY):

INCHES	MILLIMETERS
X.XXX = ±0.005	X.XX = ±0.1
X.XX = ±0.025	X.X = ±0.5
X.X = ±0.050	X = ±1
ANGULAR = ±1.0 DEGREE	

- MATERIAL: 2024-T3 CLAD ALUMINUM

1 ETCH OR STEEL STAMP THE REFERENCE STANDARD NUMBER NDT3090A

2 COUNTERSINK DEPTH:
0.033 (0.84) FOR 5/32 RIVETS
+0.000/-0.002 (+0.0/-0.05)

3 INSTALL FIVE BACR15GF5D5 ALODINED RIVETS IN THIS ROW.

4 INSTALL SIX ANODIZED RIVETS IN THIS ROW. USE AF1049U1D5C5 (ALLFAST FASTENING SYSTEMS INC.) OR NAS1097D5-5D (SIERRA PACIFIC SUPPLY CO.)

5 CLEAN EACH RIVET AND RIVET HOLE WITH SOLVENT BEFORE INSTALLATION. INSTALL RIVETS AS SPECIFIED IN PART 1, 51-01-04.

6 EDM NOTCH (4 LOCATIONS).
NOTCH TOLERANCE:
WIDTH = 0.020 (0.50) MAXIMUM
LENGTH = ±10% OF THE DIMENSIONS SHOWN
DEPTH = THROUGH THE THICKNESS

2159821 S0000472172_V1

Reference Standard NDT3090A
Figure 2

BOEING PROPRIETARY - Copyright © Unpublished Work - See title page for details

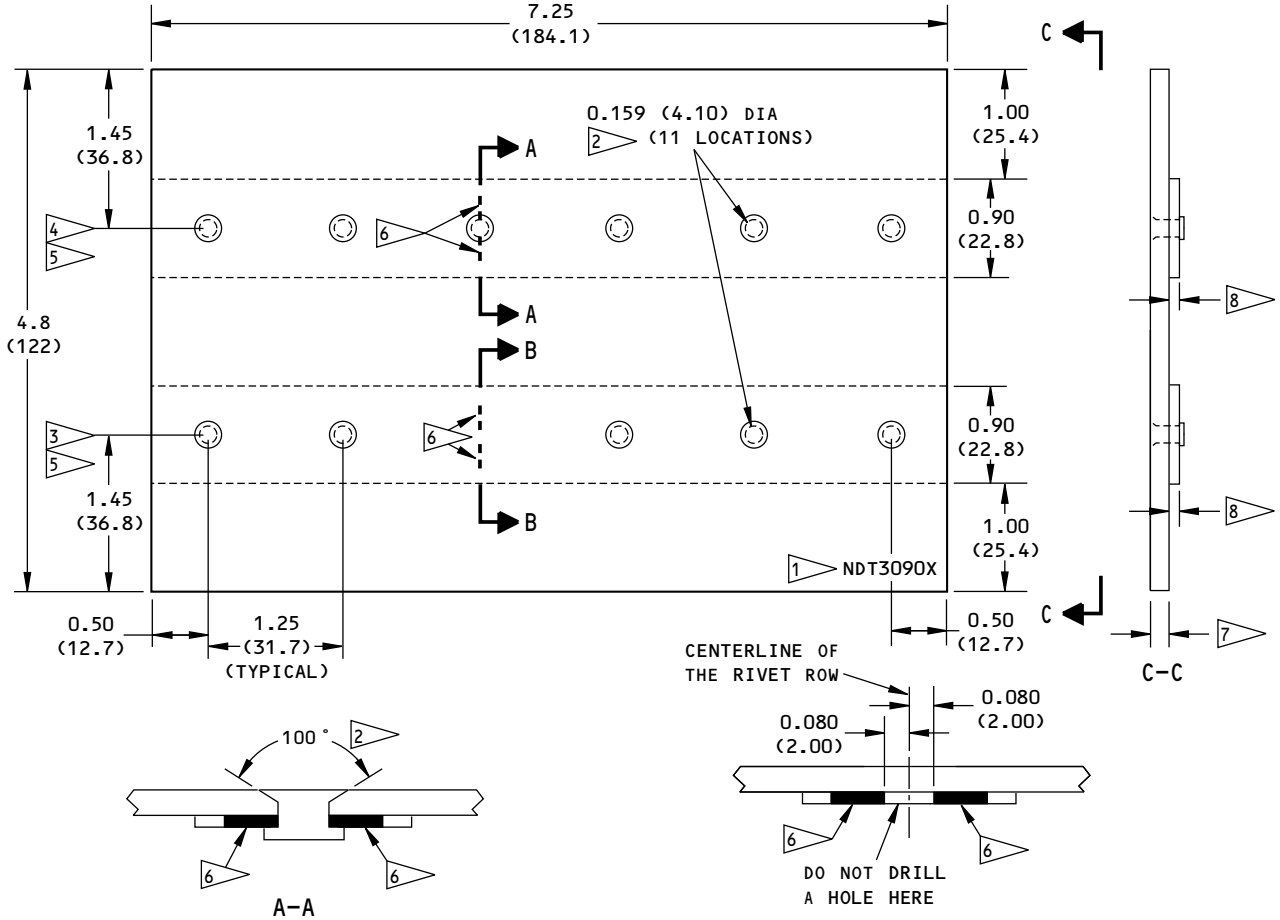

NOTES:

- ALL DIMENSIONS ARE IN INCHES (MILLIMETERS ARE IN PARENTHESES)
- TOLERANCE (UNLESS SPECIFIED DIFFERENTLY):

INCHES	MILLIMETERS
X.XXX = ±0.005	X.XX = ±0.1
X.XX = ±0.025	X.X = ±0.5
X.X = ±0.050	X = ±1
ANGULAR = ±1.0 DEGREE	

- MATERIAL: 2024-T3 CLAD ALUMINUM

1 ETCH OR STEEL STAMP THE REFERENCE STANDARD NUMBER, NDT 3090B OR NDT3090C, AS APPLICABLE.

2 COUNTERSINK DEPTH:
0.033 (0.84) FOR 5/32 RIVETS
+0.000/-0.002 (+0.0/-0.05)

3 INSTALL FIVE ALODINED RIVETS IN THIS ROW. USE BACR15GF5D5 RIVETS FOR NDT3090B AND BACR15GF5D6 RIVETS FOR NDT3090C.

4 INSTALL SIX ANODIZED RIVETS IN THIS ROW. USE AF1049U1D5C5 (ALLFAST FASTENING SYSTEMS INC.) OR NAS1097D5-5D (SIERRA PACIFIC SUPPLY CO.) RIVETS FOR NDT3090B. USE AF1049U1D5C6 (ALLFAST FASTENING SYSTEMS INC.) OR NAS1097D5-6D (SIERRA PACIFIC SUPPLY CO.) RIVETS FOR NDT3090C.

5 CLEAN EACH RIVET AND RIVET HOLE WITH SOLVENT BEFORE INSTALLATION. INSTALL RIVETS AS SPECIFIED IN PART 1, 51-01-04.

6 EDM NOTCH (4 LOCATIONS).
NOTCH TOLERANCE:
WIDTH = 0.020 (0.50) MAXIMUM
LENGTH = 0.200 (5.0) ±10% FOR NDT3090B.
0.250 (6.35) ±10% FOR NDT3090C
DEPTH = THROUGH THE THICKNESS

7 0.071 (1.80) FOR NDT3090B;
0.125 (3.20) FOR NDT3090C.

8 0.032 OR 0.036 (0.80 OR 0.90)

2159824 S0000472173_V1

Reference Standard NDT3090B AND NDT3090C
Figure 3

BOEING PROPRIETARY - Copyright © Unpublished Work - See title page for details

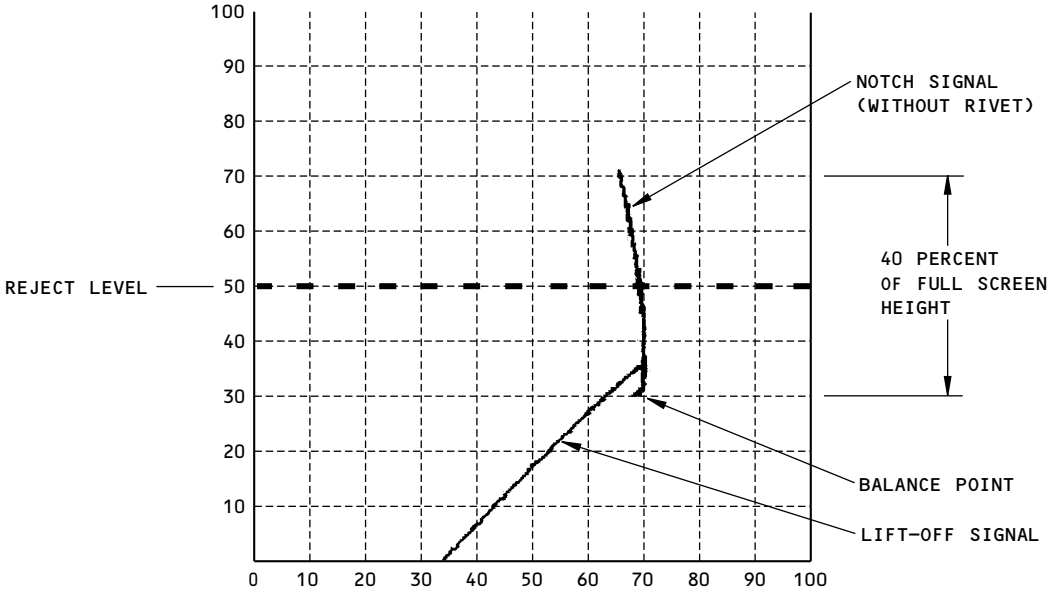

DETAIL I

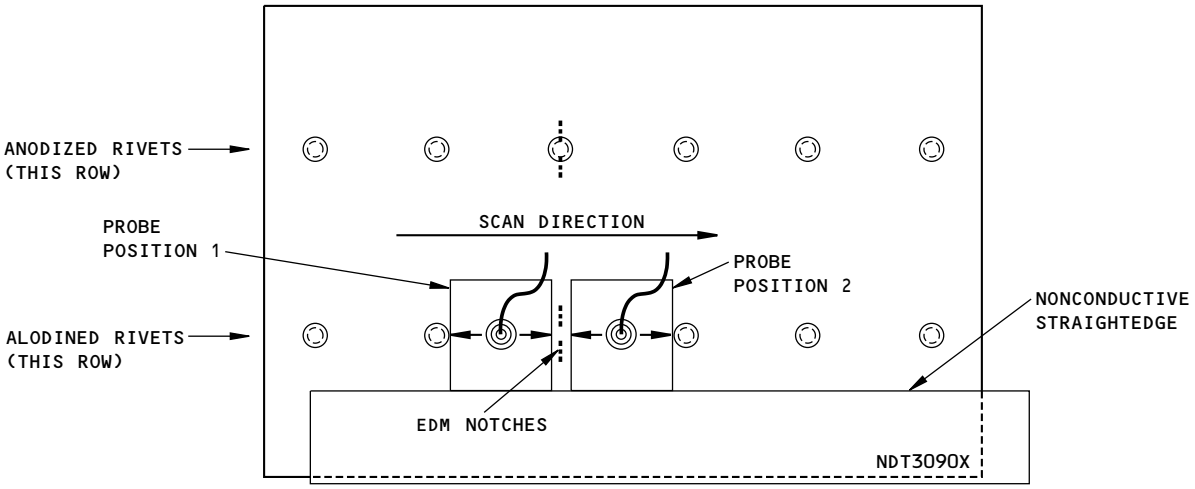

DETAIL II

NOTES:

- USE THE STRAIGHTEDGE TO ALIGN THE CENTERLINE OF THE PROBE WITH THE CENTERLINE OF THE RIVETS AT PROBE POSITION 1.
- BALANCE THE INSTRUMENT WITH THE PROBE AT PROBE POSITION 1.
- DO THE SCAN AND ADJUST THE INSTRUMENT TO GET THE SIGNALS SHOWN ABOVE.

2159825 S0000472174_V2

Instrument Calibration
Figure 4

BOEING PROPRIETARY - Copyright © Unpublished Work - See title page for details

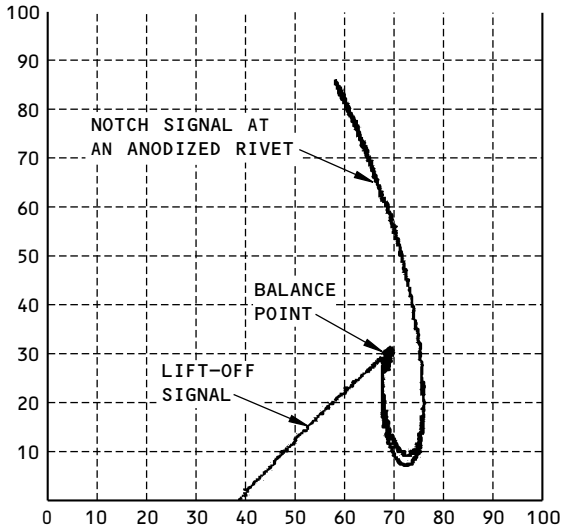

NOTCH SIGNAL AT AN ANODIZED RIVET
LOCATION FROM PROBE POSITION 3 TO 4

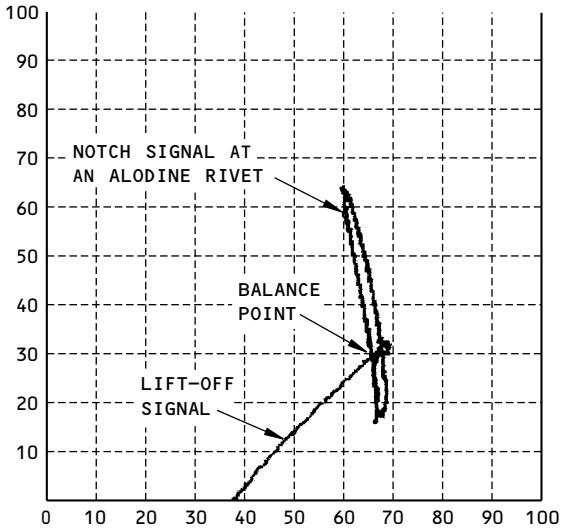

NOTCH SIGNAL AT AN ALODINED RIVET
LOCATION (FROM A DIFFERENT REFERENCE
STANDARD NOT SHOWN HERE)

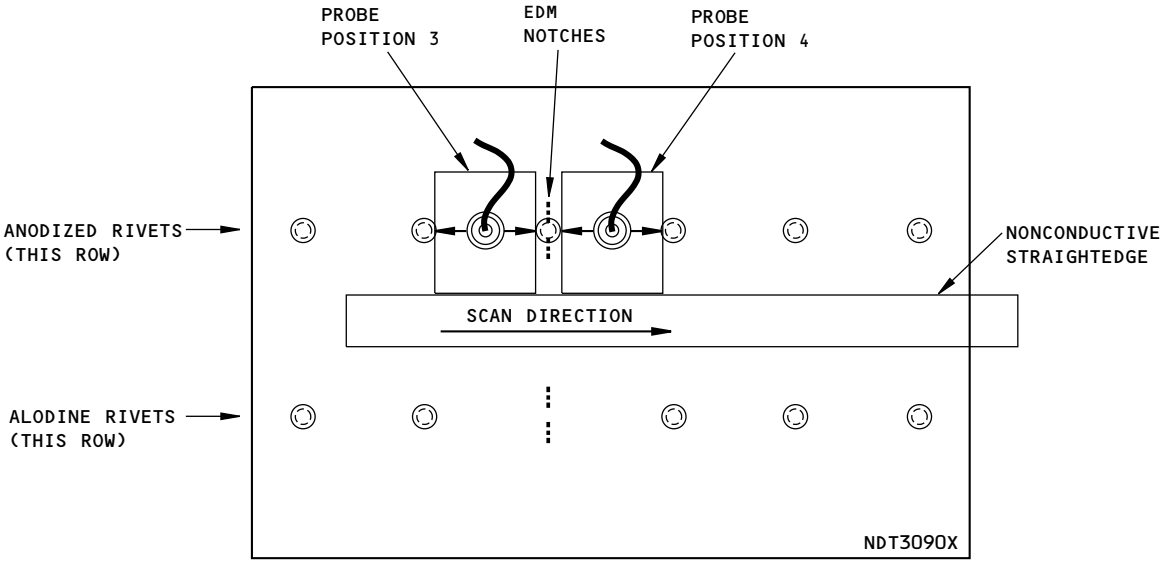

NOTES:

- THE SIGNALS SHOWN ABOVE SHOW HOW SIGNALS LOOK DIFFERENT AT ALODINE RIVET LOCATIONS AS COMPARED TO ANODIZED RIVET LOCATIONS.
- CRACK SIGNALS FROM THE AIRPLANE CAN LOOK DIFFERENT THAN THE SIGNALS SHOWN ABOVE.

DETAIL I

NOTCH SIGNALS AT ALODINE AND ANODIZED
RIVET LOCATIONS

2159828 S0000472175_V1

Calibration Probe Scans
Figure 5 (Sheet 1 of 3)

BOEING PROPRIETARY - Copyright © Unpublished Work - See title page for details

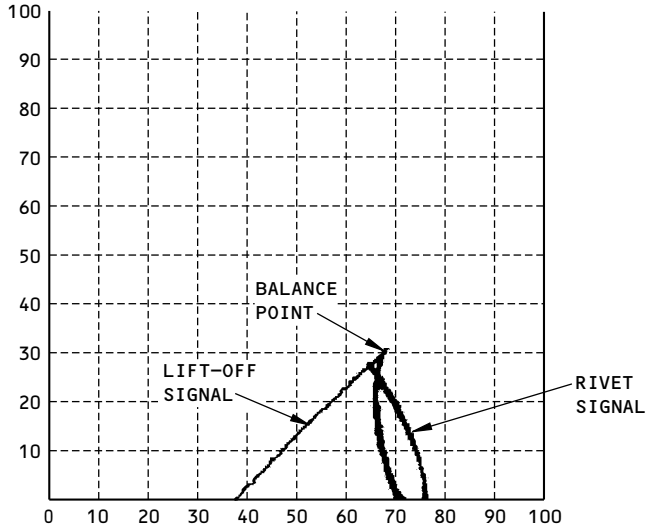

SIGNALS FROM ANODIZED RIVETS WHEN THE PROBE CENTERLINE IS ALIGNED WITH THE CENTERLINE OF THE RIVETS. SEE PROBE POSITION 5 AND 6 BELOW FOR THE PROBE SCAN

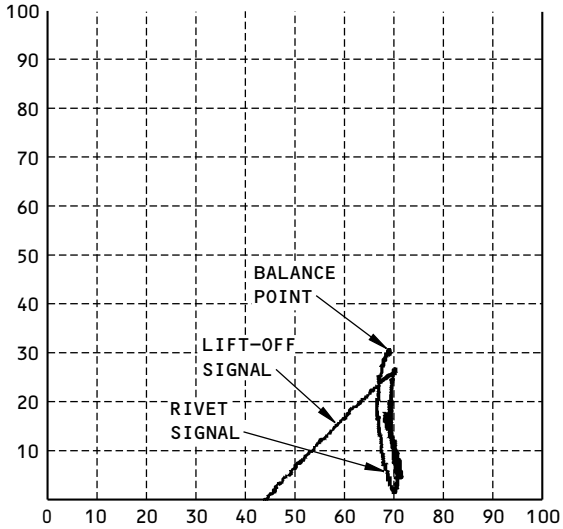

SIGNALS FROM ALODINED RIVETS WHEN THE PROBE CENTERLINE IS ALIGNED WITH THE CENTERLINE OF THE RIVETS. SEE PROBE POSITION 7 AND 8 BELOW FOR THE PROBE SCAN

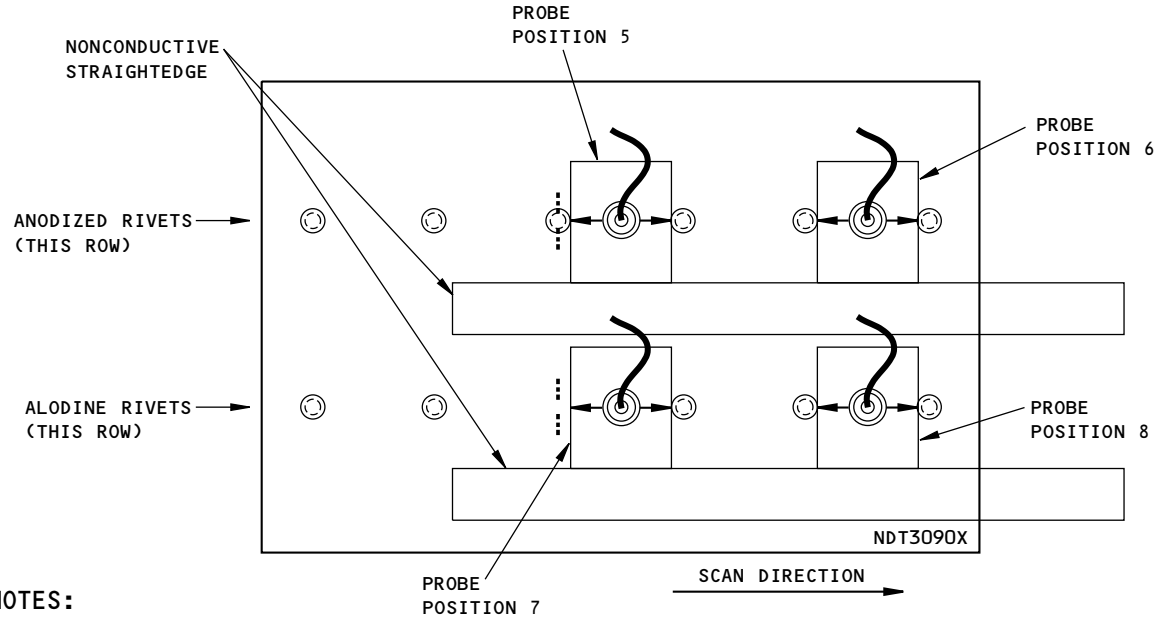

NOTES:

- DO THE SCANS SHOWN ABOVE SO THE PROBE CENTERLINE IS ALIGNED WITH THE CENTERLINE OF THE RIVETS. SEE THE SCANS AT PROBE POSITIONS 5 THRU 8.
- THESE SCANS ARE DONE TO SEE RIVET SIGNALS THAT OCCUR WHEN THE PROBE IS CORRECTLY ALIGNED ON THE CENTERLINE OF THE RIVETS DURING THE SCAN.

DETAIL II
ANODIZED AND ALODINE RIVET SIGNALS
WHEN THE PROBE IS ON CENTER

2159829 S0000472176_V1

Calibration Probe Scans
Figure 5 (Sheet 2 of 3)

BOEING PROPRIETARY - Copyright © Unpublished Work - See title page for details

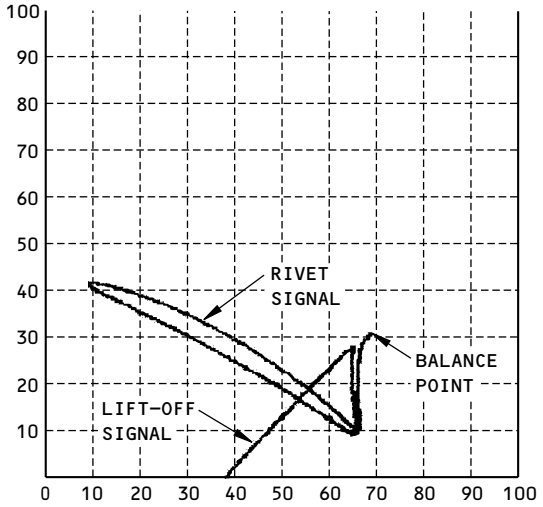

SIGNAL FROM AN ANODIZED RIVET WHEN THE PROBE CENTERLINE IS NOT ALIGNED WITH THE CENTERLINE OF THE RIVETS. SEE PROBE POSITION 9 AND 10 BELOW FOR THE PROBE SCAN

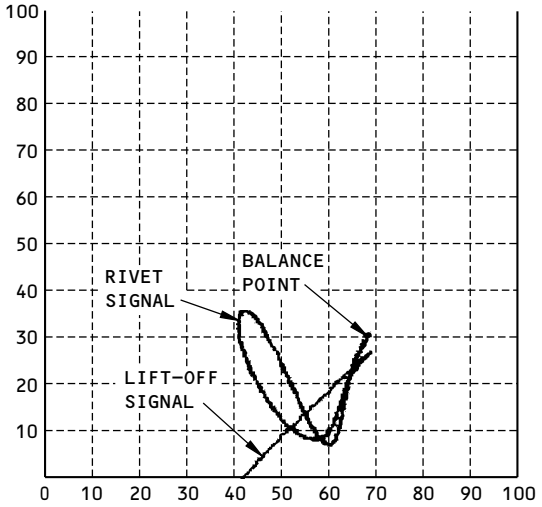

SIGNAL FROM AN ALODINED RIVET WHEN THE PROBE CENTERLINE IS NOT ALIGNED WITH THE CENTERLINE OF THE RIVETS. SEE PROBE POSITION 11 AND 12 BELOW FOR THE PROBE SCAN

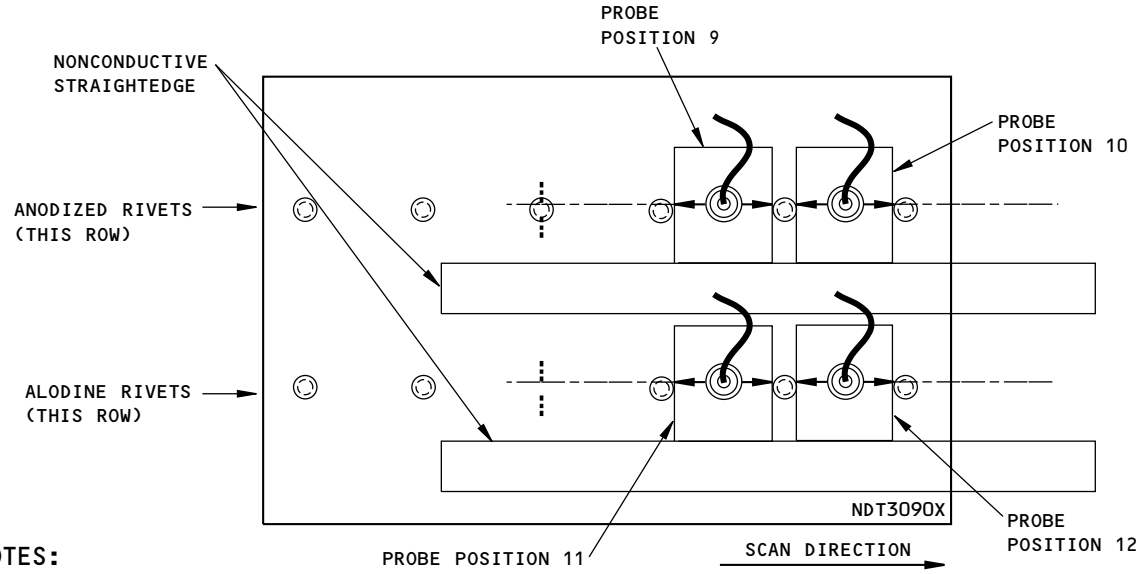

NOTES:

- ALIGN THE STRAIGHTEDGE SO THAT THE PROBE CENTERLINE IS APPROXIMATELY HALF THE DISTANCE BETWEEN THE RIVET CENTERLINE AND THE EDGE OF THE RIVET (AS SHOWN ABOVE).
- THE SCANS SHOWN ABOVE ARE DONE TO SHOW THE SIGNALS THAT OCCUR WHEN THE PROBE SCANS ARE NOT ALIGNED WITH THE CENTERLINE OF THE RIVETS.
- THE SIGNALS CAN BE DIFFERENT WHEN THE PROBE SCAN IS DONE AT A DIFFERENT DISTANCE FROM THE RIVET CENTERLINE. TRY MORE SCANS WITH DIFFERENT OFF CENTER CONDITIONS TO SEE HOW DIFFERENT THE SIGNALS LOOK ON THE INSTRUMENT DISPLAY.
- DURING THE INSPECTION, WHEN YOU SEE SIGNALS ALMOST THE SAME AS THE SIGNALS SHOWN ABOVE, MOVE THE CENTERLINE OF THE PROBE SO IT IS ALIGNED WITH THE CENTERLINE OF THE RIVETS AND DO THE SCAN AGAIN.

DETAIL III

RIVET SIGNALS WHEN THE PROBE IS NOT ON CENTER

2159831 S0000472178_V1

Calibration Probe Scans
Figure 5 (Sheet 3 of 3)

BOEING PROPRIETARY - Copyright © Unpublished Work - See title page for details

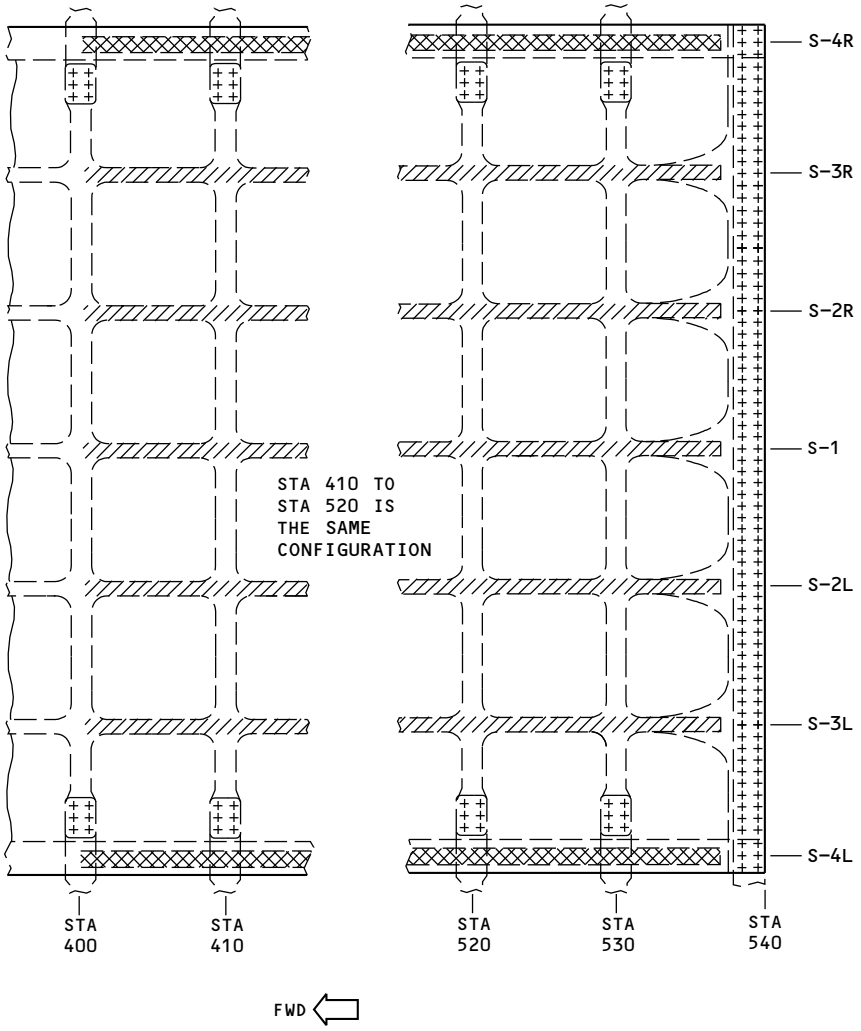

NOTES:

INSPECTION AREA. USE REFERENCE STANDARD NDT3090A DURING CALIBRATION FOR THIS INSPECTION AREA.

INSPECTION AREA. USE REFERENCE STANDARD NDT3090B DURING CALIBRATION FOR THIS INSPECTION AREA.

-100 AIRPLANES

2159835 S0000472179_V1

Inspection Areas
Figure 6 (Sheet 1 of 6)

BOEING PROPRIETARY - Copyright © Unpublished Work - See title page for details

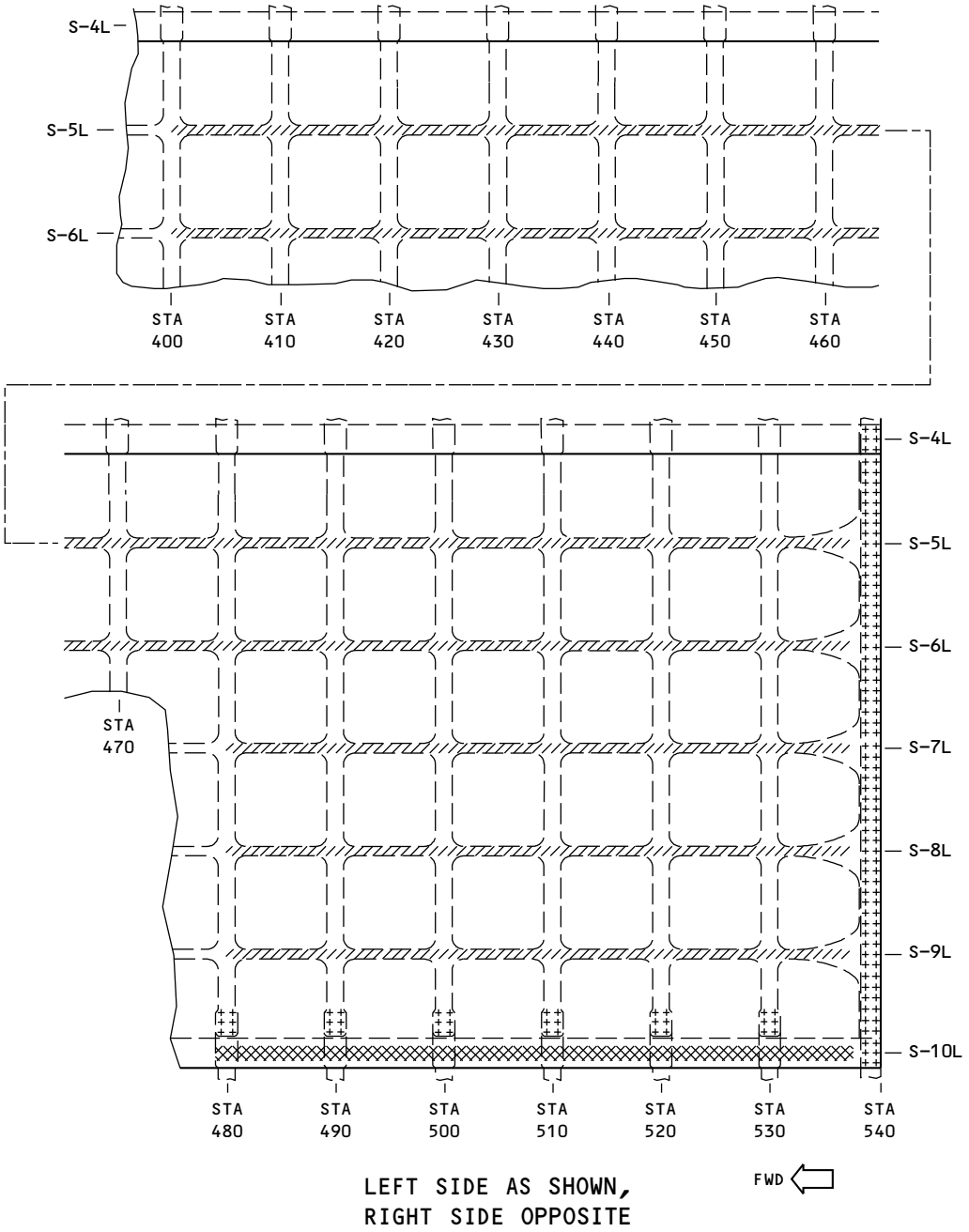

NOTES:

INSPECTION AREA. USE REFERENCE STANDARD NDT3090A DURING CALIBRATION FOR THIS INSPECTION AREA.

INSPECTION AREA. USE REFERENCE STANDARD NDT3090B DURING CALIBRATION FOR THIS INSPECTION AREA.

-100 AIRPLANES

2159837 S0000472180_V1

Inspection Areas
Figure 6 (Sheet 2 of 6)

BOEING PROPRIETARY - Copyright © Unpublished Work - See title page for details

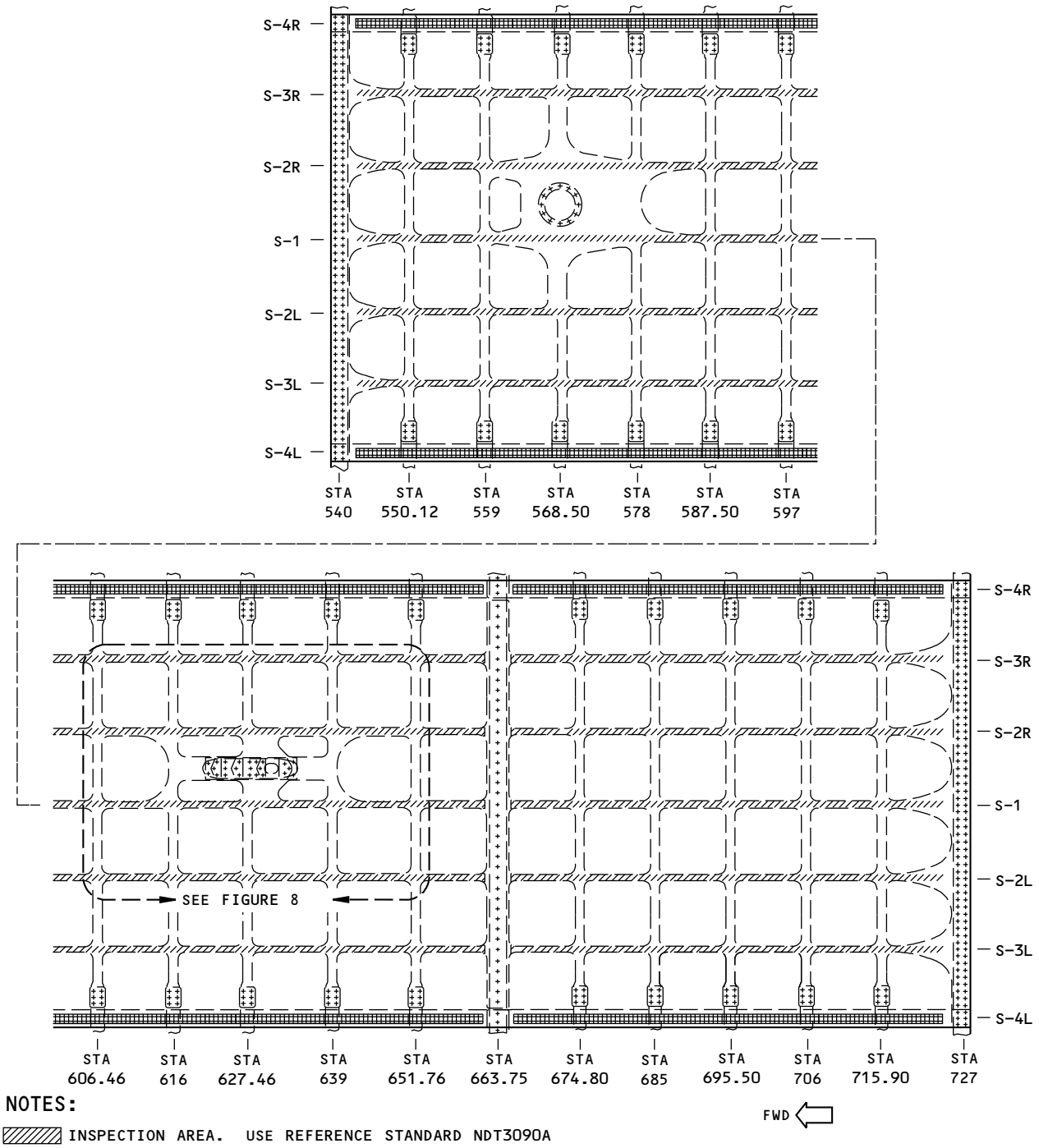

NOTES:

INSPECTION AREA. USE REFERENCE STANDARD NDT3090A DURING CALIBRATION FOR THIS INSPECTION AREA.

INSPECTION AREA. USE REFERENCE STANDARD NDT3090C DURING CALIBRATION FOR THIS INSPECTION AREA.

-100 AIRPLANES

2159841 S0000472181_V1

Inspection Areas
Figure 6 (Sheet 3 of 6)

BOEING PROPRIETARY - Copyright © Unpublished Work - See title page for details

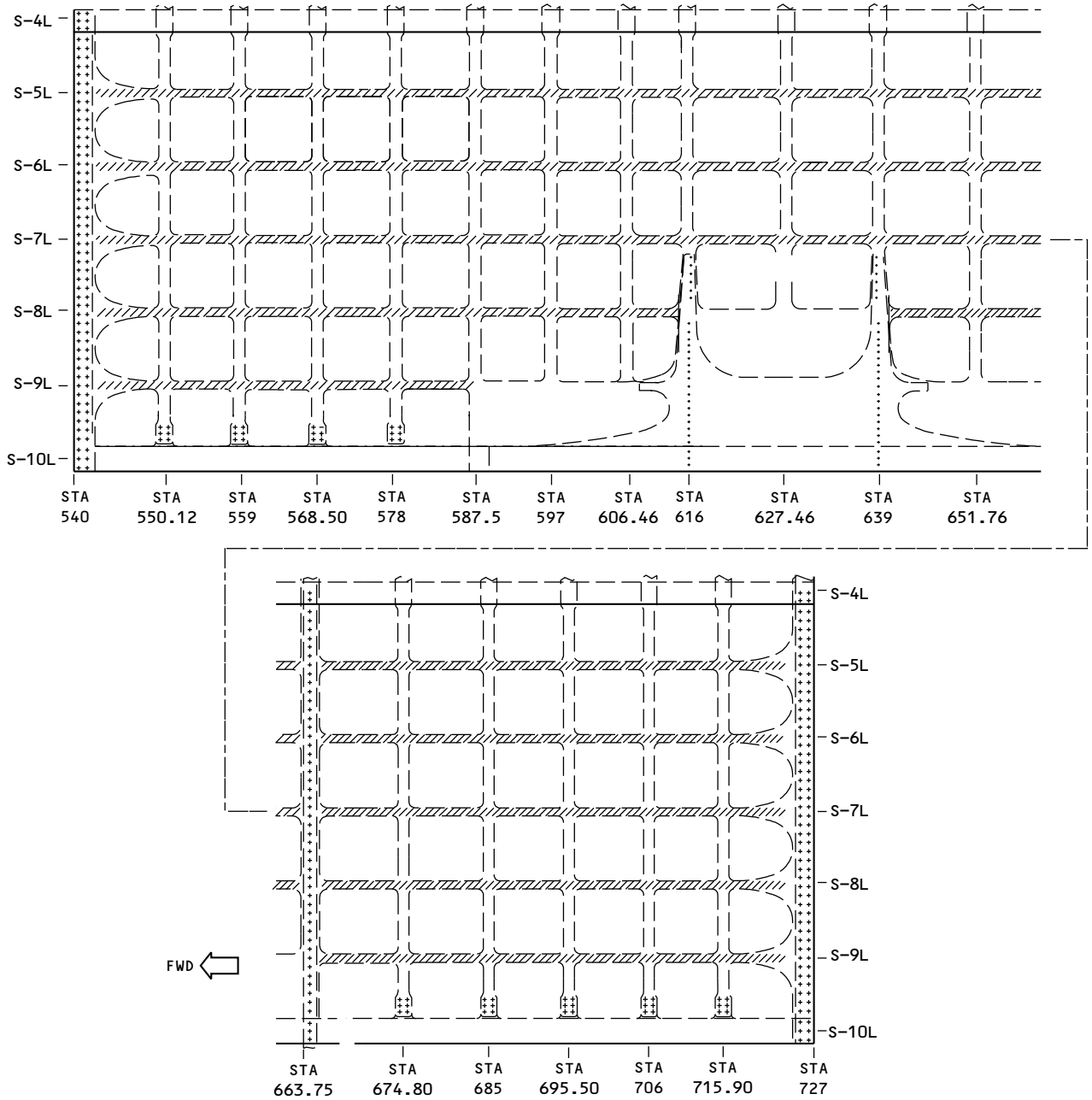

LEFT SIDE AS SHOWN;
RIGHT SIDE OPPOSITE

NOTES:

INSPECTION AREA. USE REFERENCE STANDARD NDT3090A DURING CALIBRATION FOR THIS INSPECTION AREA.

-100 AIRPLANES

2159849 S0000472182_V1

Inspection Areas
Figure 6 (Sheet 4 of 6)

BOEING PROPRIETARY - Copyright © Unpublished Work - See title page for details

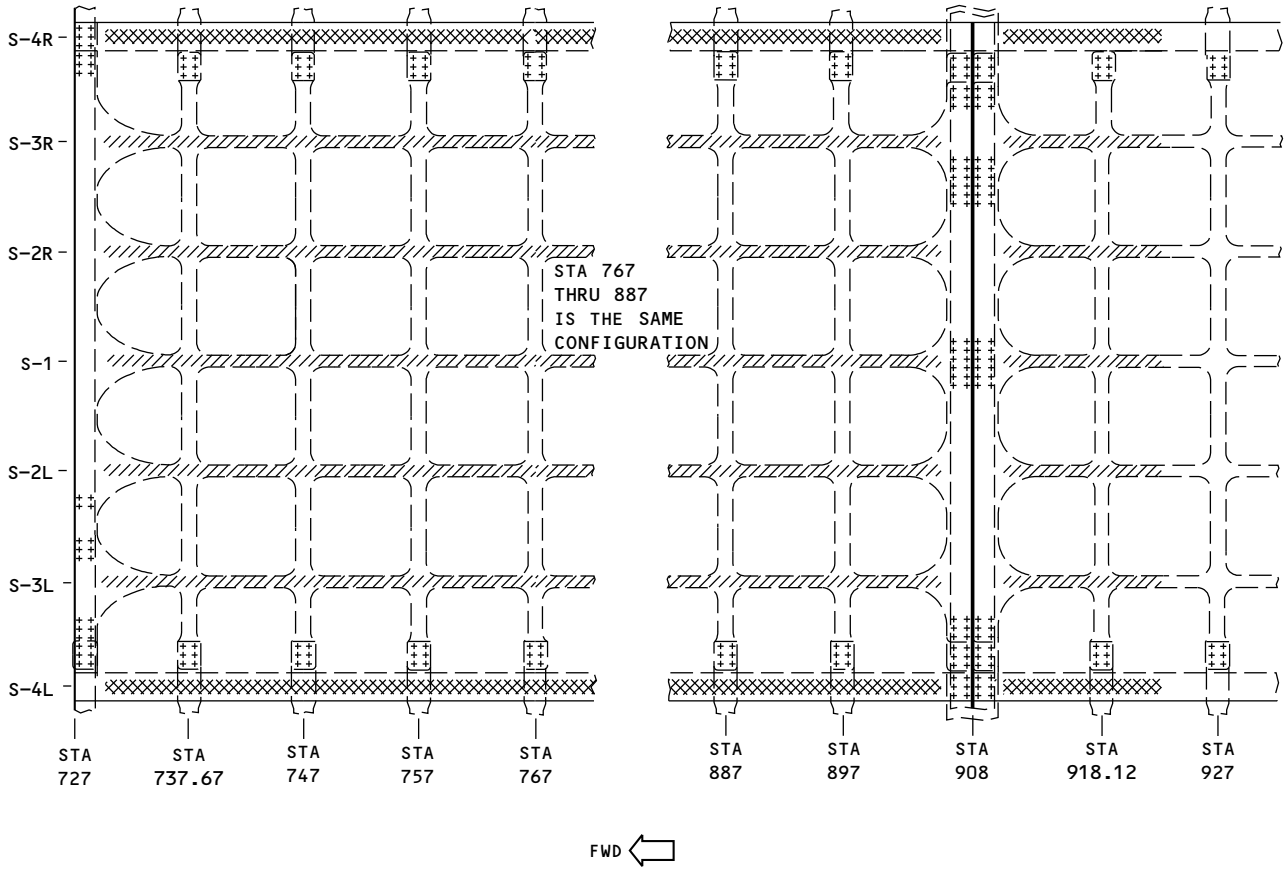

NOTES:

INSPECTION AREA. USE REFERENCE STANDARD NDT3090A DURING CALIBRATION FOR THIS INSPECTION AREA.

INSPECTION AREA. USE REFERENCE STANDARD NDT3090B DURING CALIBRATION FOR THIS INSPECTION AREA.

-100 AIRPLANES

2159850 S0000472183_V1

Inspection Areas
Figure 6 (Sheet 5 of 6)

BOEING PROPRIETARY - Copyright © Unpublished Work - See title page for details

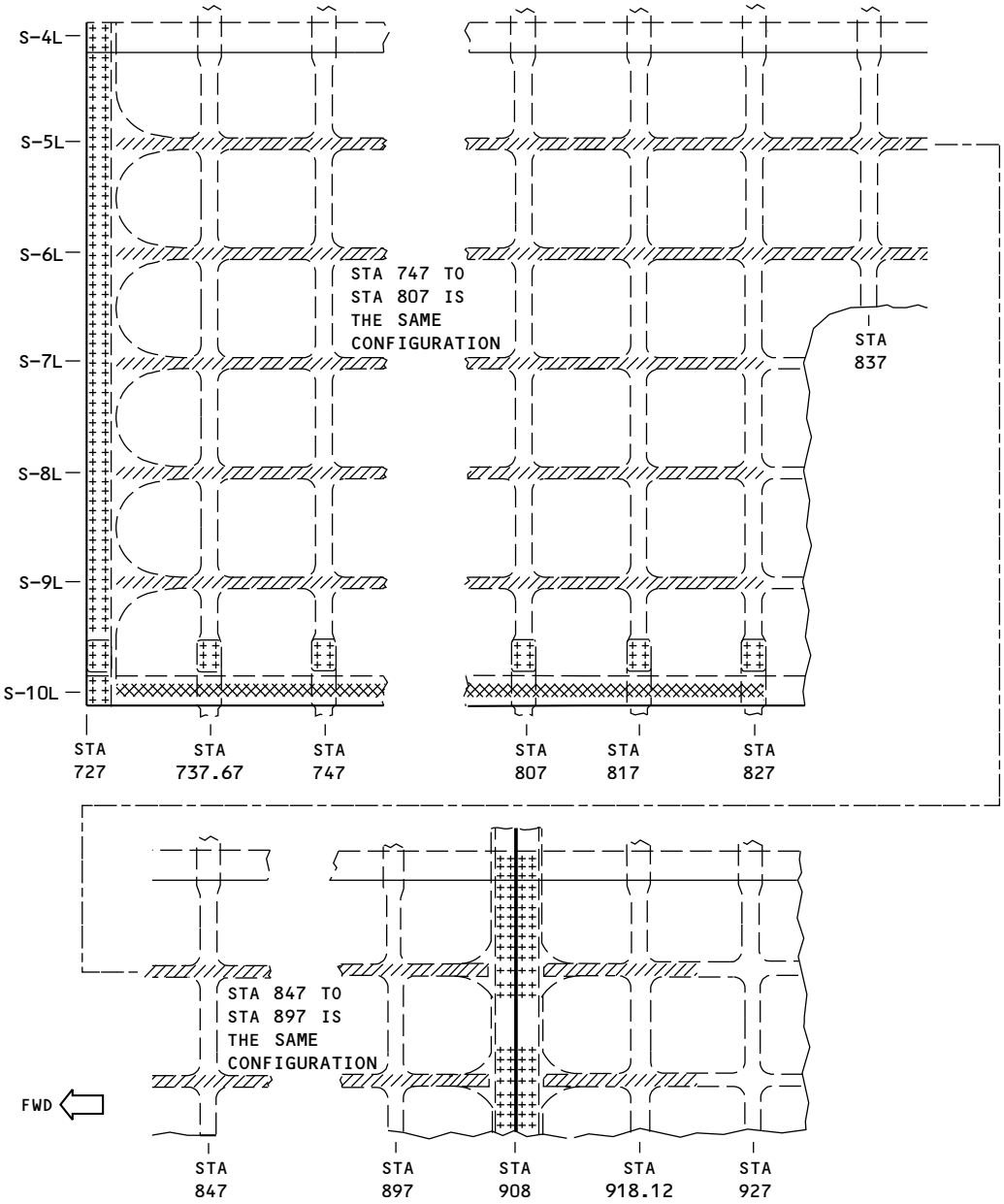

LEFT SIDE AS SHOWN,
RIGHT SIDE OPPOSITE

NOTES:

INSPECTION AREA. USE REFERENCE STANDARD NDT3090A DURING CALIBRATION FOR THIS INSPECTION AREA.

INSPECTION AREA. USE REFERENCE STANDARD NDT3090B DURING CALIBRATION FOR THIS INSPECTION AREA.

-100 AIRPLANES

2159852 S0000472184_V1

Inspection Areas
Figure 6 (Sheet 6 of 6)

BOEING PROPRIETARY - Copyright © Unpublished Work - See title page for details

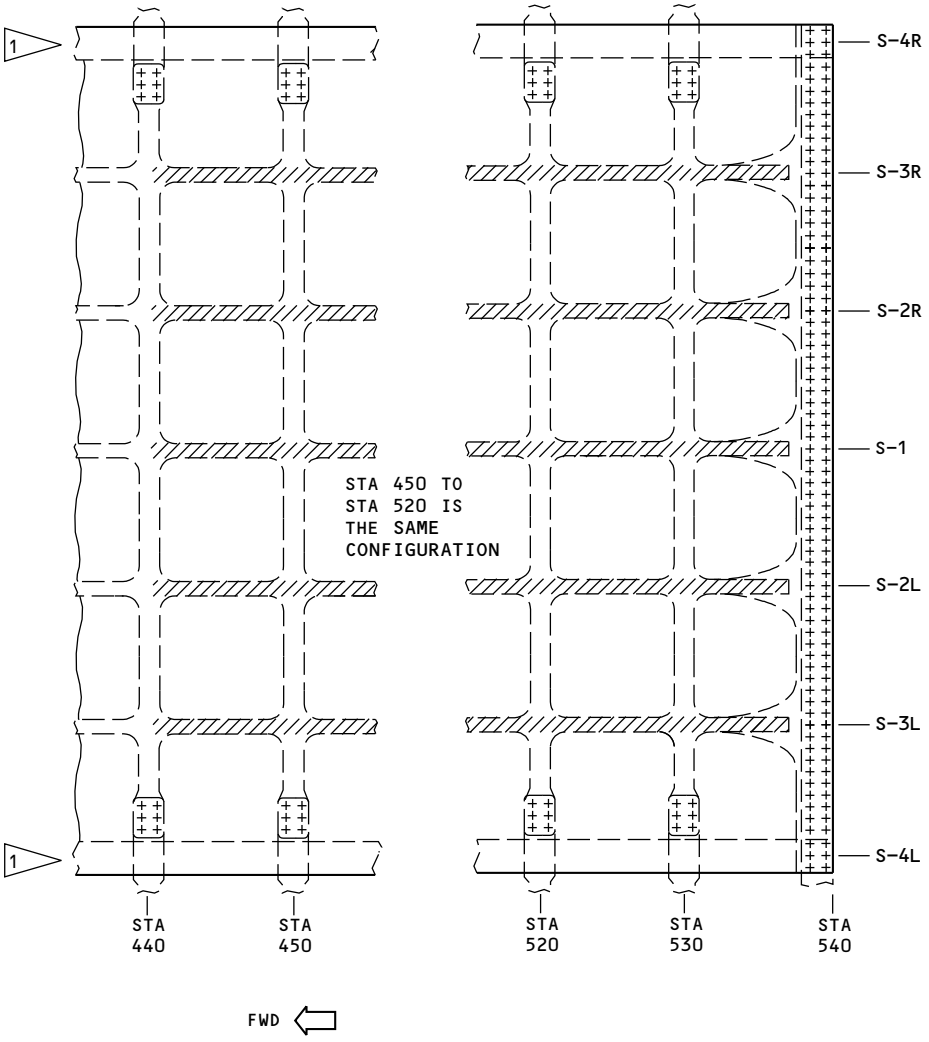

NOTES:

INSPECTION AREA. USE REFERENCE STANDARD NDT3090A DURING CALIBRATION FOR THIS INSPECTION AREA.

1 NO INSPECTION ON LAP SPLICES AT S-4L AND S-4R FROM STA 440 TO STA 540

-200 AIRPLANES

2159853 S0000472185_V1

Inspection Areas
Figure 7 (Sheet 1 of 6)

BOEING PROPRIETARY - Copyright © Unpublished Work - See title page for details

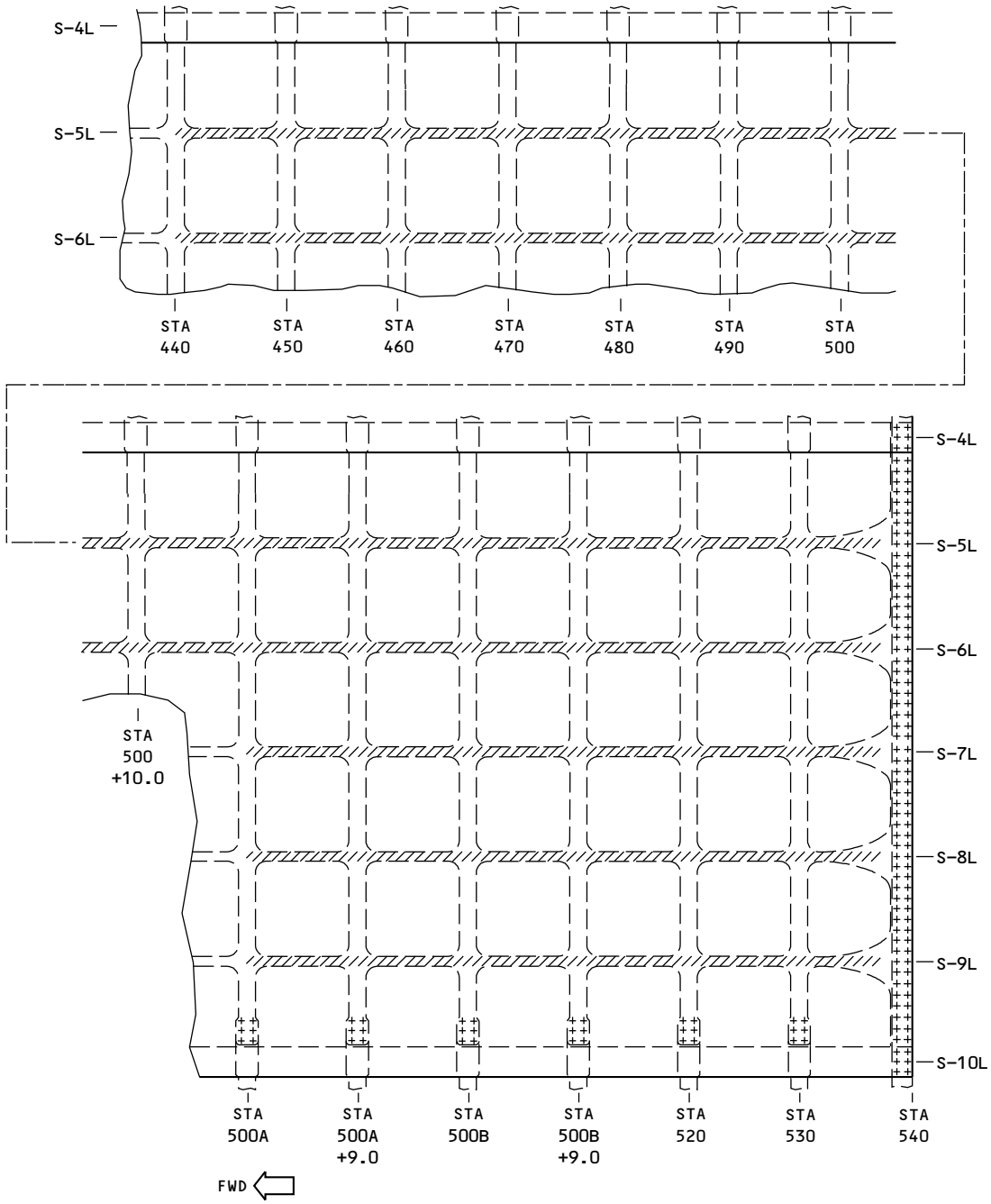

LEFT SIDE AS SHOWN;
RIGHT SIDE OPPOSITE

NOTES:

INSPECTION AREA. USE REFERENCE STANDARD NDT3090A DURING CALIBRATION FOR THIS INSPECTION AREA.

-200 AIRPLANES

2159854 S0000472186_V1

Inspection Areas
Figure 7 (Sheet 2 of 6)

BOEING PROPRIETARY - Copyright © Unpublished Work - See title page for details

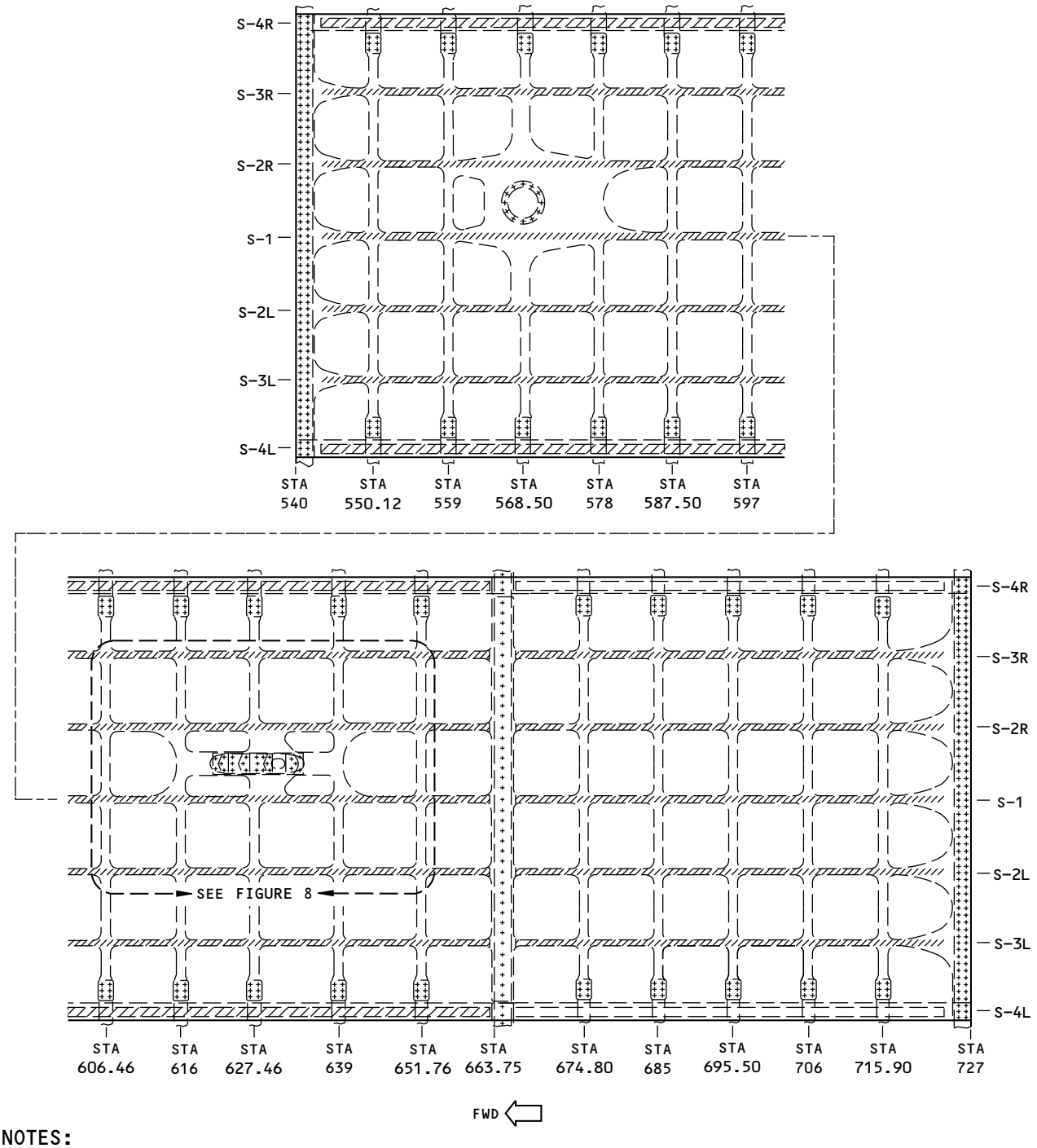

NOTES:

INSPECTION AREA. USE REFERENCE STANDARD NDT3090A DURING CALIBRATION FOR THIS INSPECTION AREA.

-200 AIRPLANES

2159856 S0000472187_V1

Inspection Areas
Figure 7 (Sheet 3 of 6)

BOEING PROPRIETARY - Copyright © Unpublished Work - See title page for details

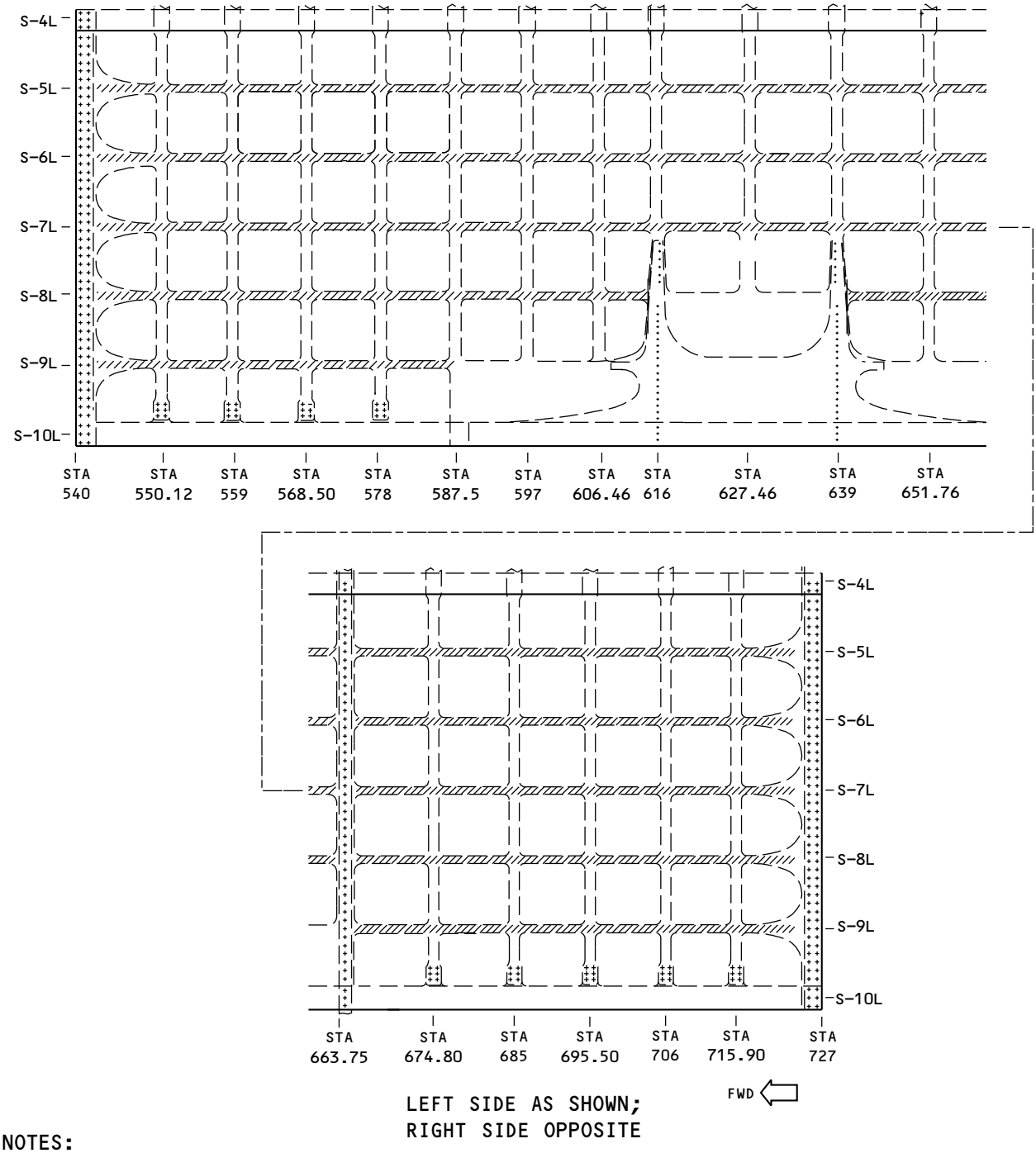

NOTES:

INSPECTION AREA. USE REFERENCE STANDARD NDT3090A DURING CALIBRATION FOR THIS INSPECTION AREA.

-200 AIRPLANES

2159859 S0000472189_V1

Inspection Areas
Figure 7 (Sheet 4 of 6)

BOEING PROPRIETARY - Copyright © Unpublished Work - See title page for details

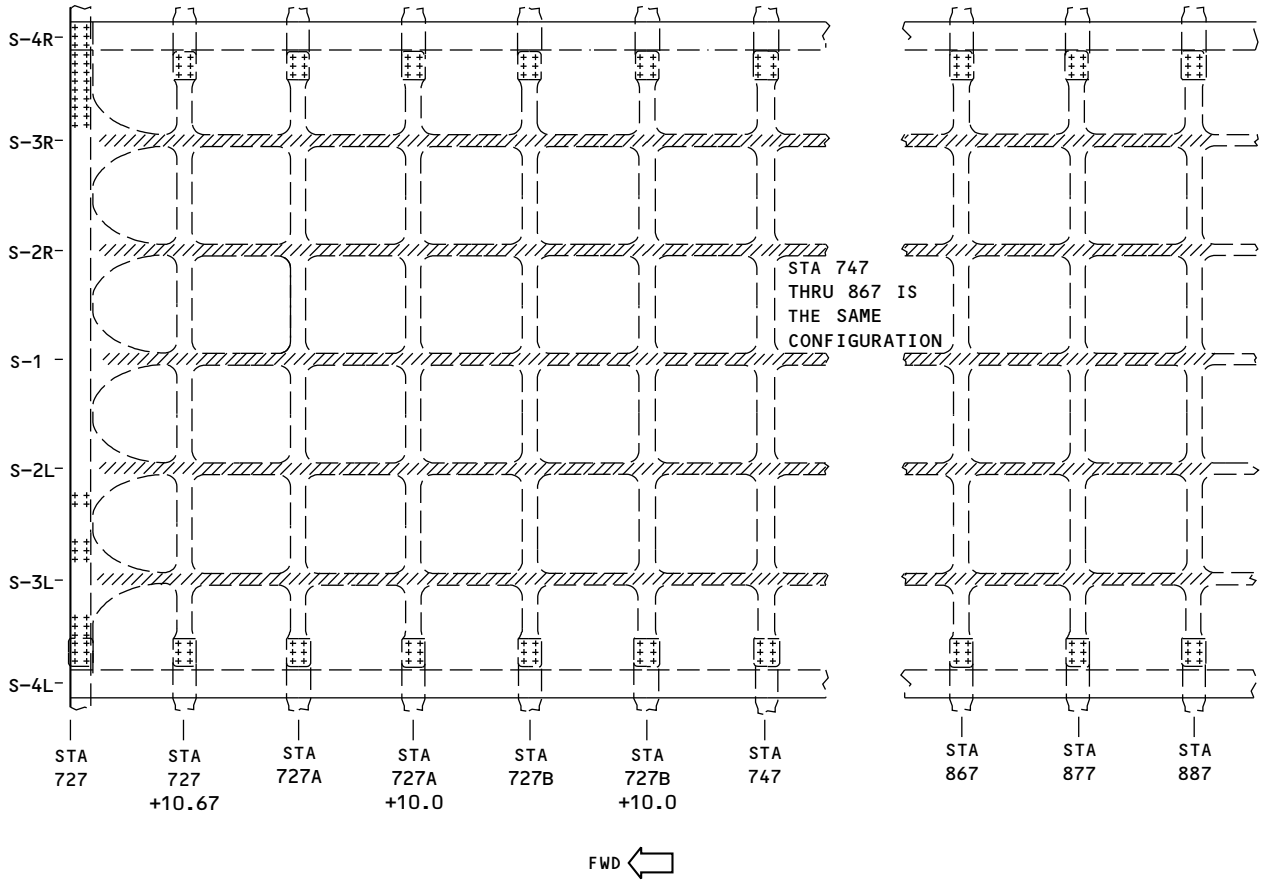

NOTES:

INSPECTION AREA. USE REFERENCE STANDARD NDT3090A DURING CALIBRATION FOR THIS INSPECTION AREA.

-200 AIRPLANES

2159863 S0000472191_V1

Inspection Areas
Figure 7 (Sheet 5 of 6)

BOEING PROPRIETARY - Copyright © Unpublished Work - See title page for details

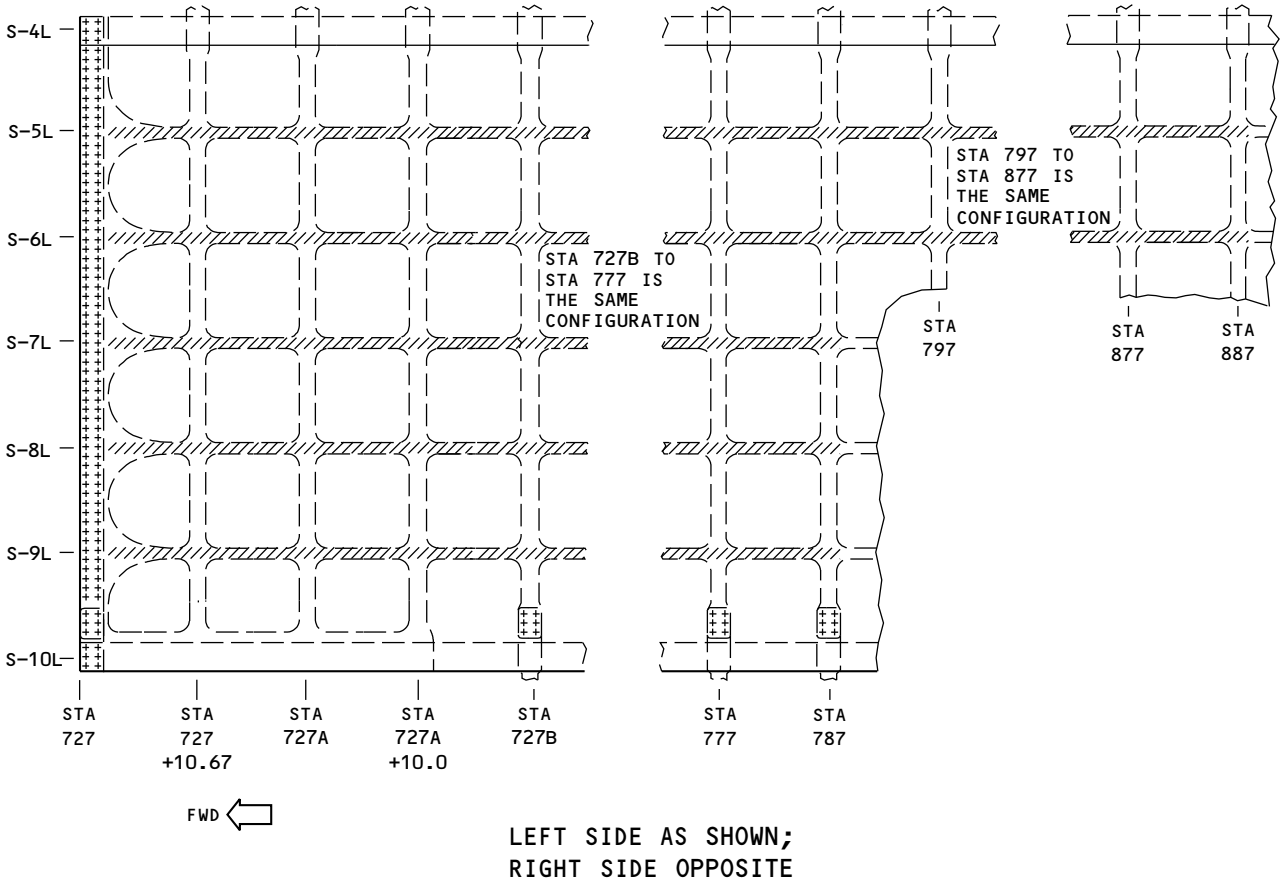

NOTES:

INSPECTION AREA. USE REFERENCE STANDARD NDT3090A DURING CALIBRATION FOR THIS INSPECTION AREA.

-200 AIRPLANES

2159864 S0000472192_V1

Inspection Areas
Figure 7 (Sheet 6 of 6)

BOEING PROPRIETARY - Copyright © Unpublished Work - See title page for details

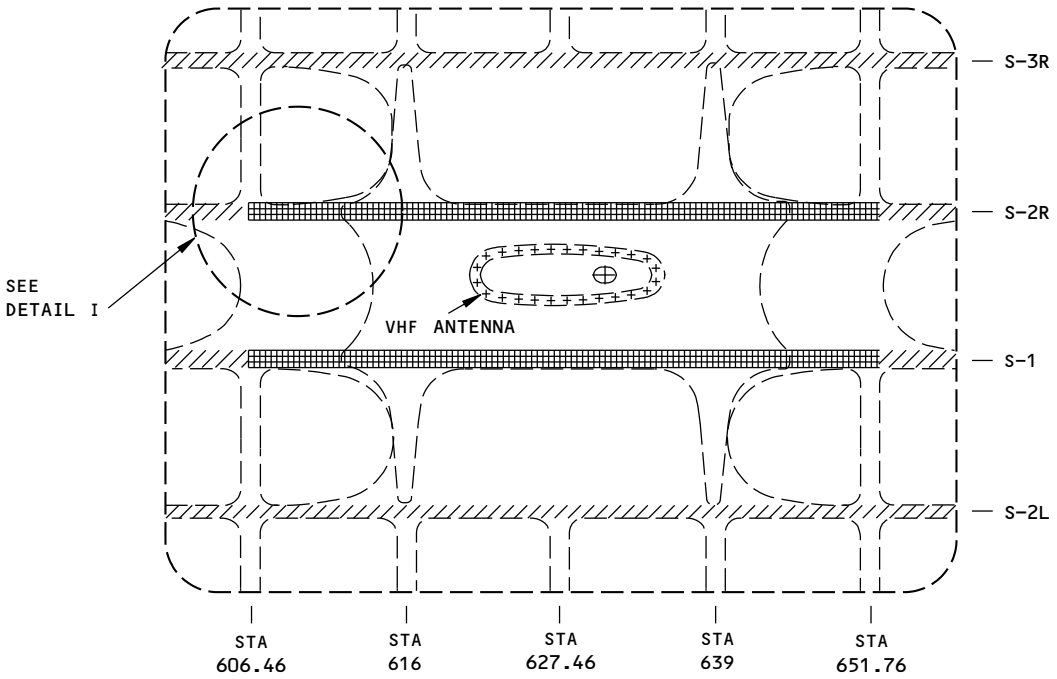

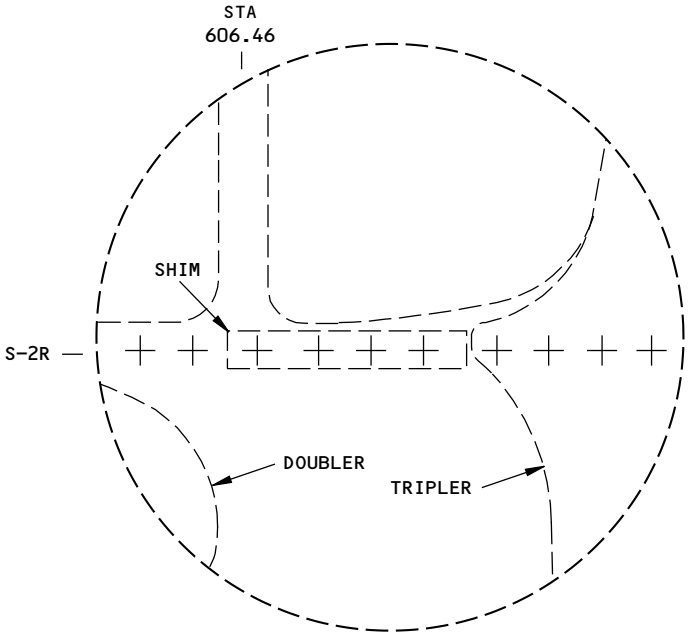

DETAIL I

STRUCTURAL CONFIGURATION FOR THE (4) LOCATIONS AT S-1 AND S-2R, STA 606.46 AND STA 651.76

NOTES:

INSPECTION AREA. USE REFERENCE STANDARD NDT3090C DURING CALIBRATION FOR THIS INSPECTION AREA.

INSPECTION AREA. USE REFERENCE STANDARD NDT3090A DURING CALIBRATION FOR THIS INSPECTION AREA.

-100 AND -200 AIRPLANES

2159866 S0000472193_V1

Inspection Areas
Figure 8

BOEING PROPRIETARY - Copyright © Unpublished Work - See title page for details

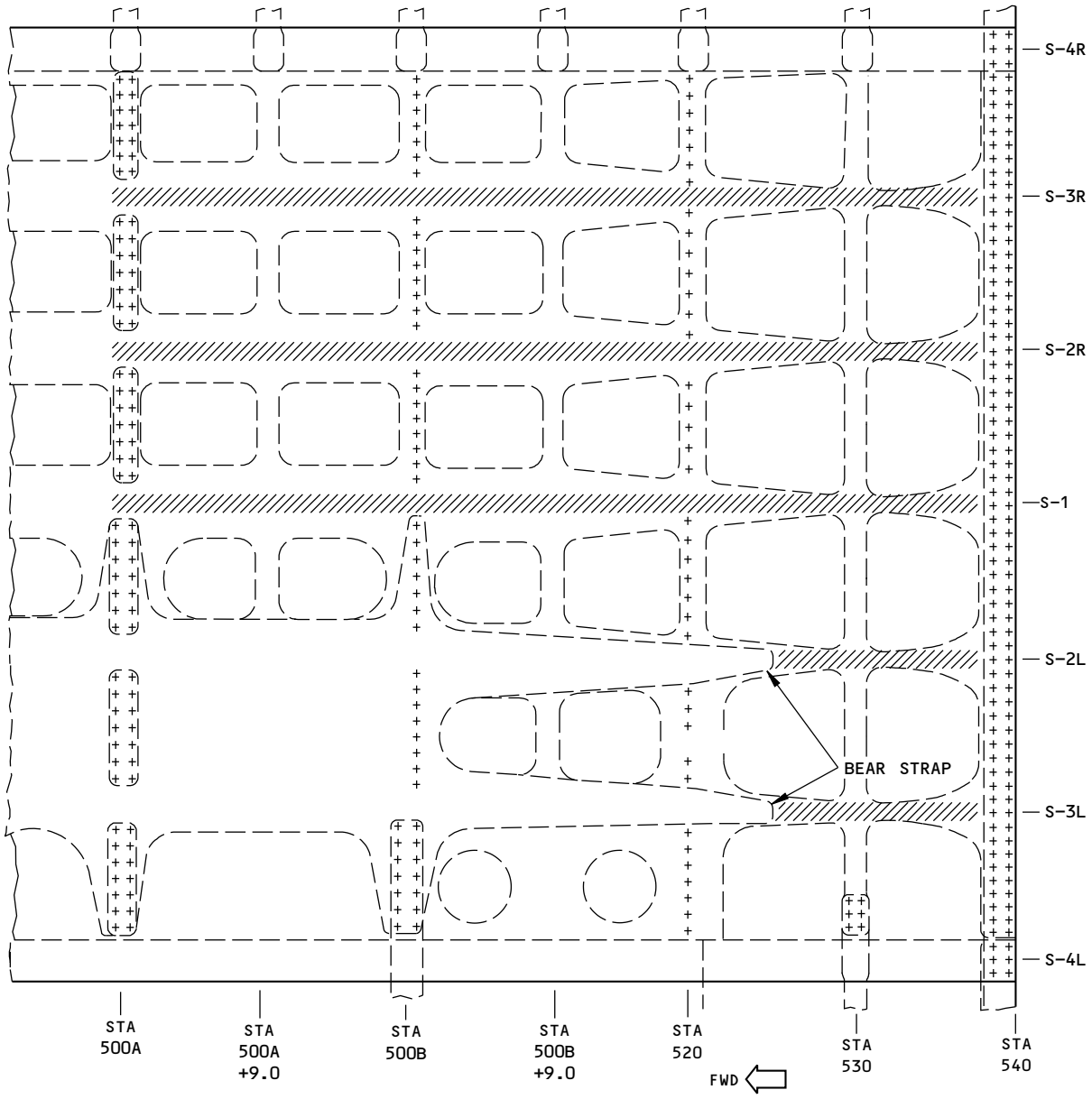

NOTES:

INSPECTION AREA. USE REFERENCE STANDARD NDT3090A DURING CALIBRATION FOR THIS INSPECTION AREA.

-200C AIRPLANES

2159867 S0000472195_V1

Inspection Areas
Figure 9 (Sheet 1 of 4)

BOEING PROPRIETARY - Copyright © Unpublished Work - See title page for details

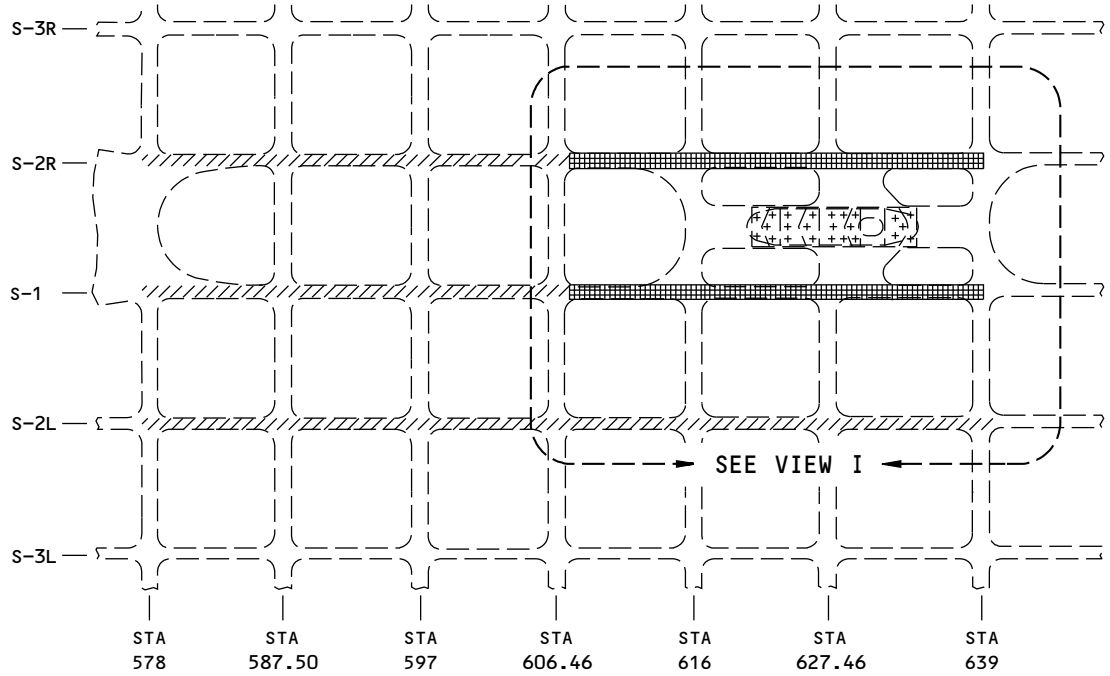

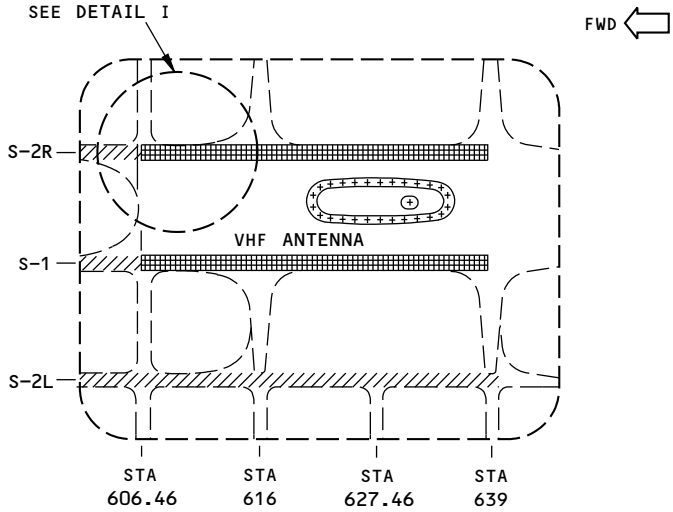

VIEW I

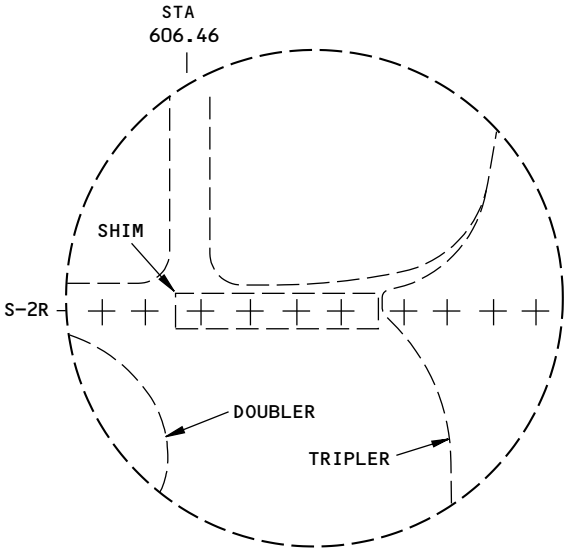

DETAIL I

NOTES:

(P8501-P8502, P8804-P8821, P8824) AIRPLANES

INSPECTION AREA. USE REFERENCE STANDARD NDT3090A DURING CALIBRATION FOR THIS INSPECTION AREA.

INSPECTION AREA. USE REFERENCE STANDARD NDT3090C DURING CALIBRATION FOR THIS INSPECTION AREA.

STRUCTURAL CONFIGURATION FOR THE (2) LOCATIONS AT S-1 AND S-2R, STA 606.46

-200C AIRPLANES

2159869 S0000472196_V1

Inspection Areas
Figure 9 (Sheet 2 of 4)

BOEING PROPRIETARY - Copyright © Unpublished Work - See title page for details

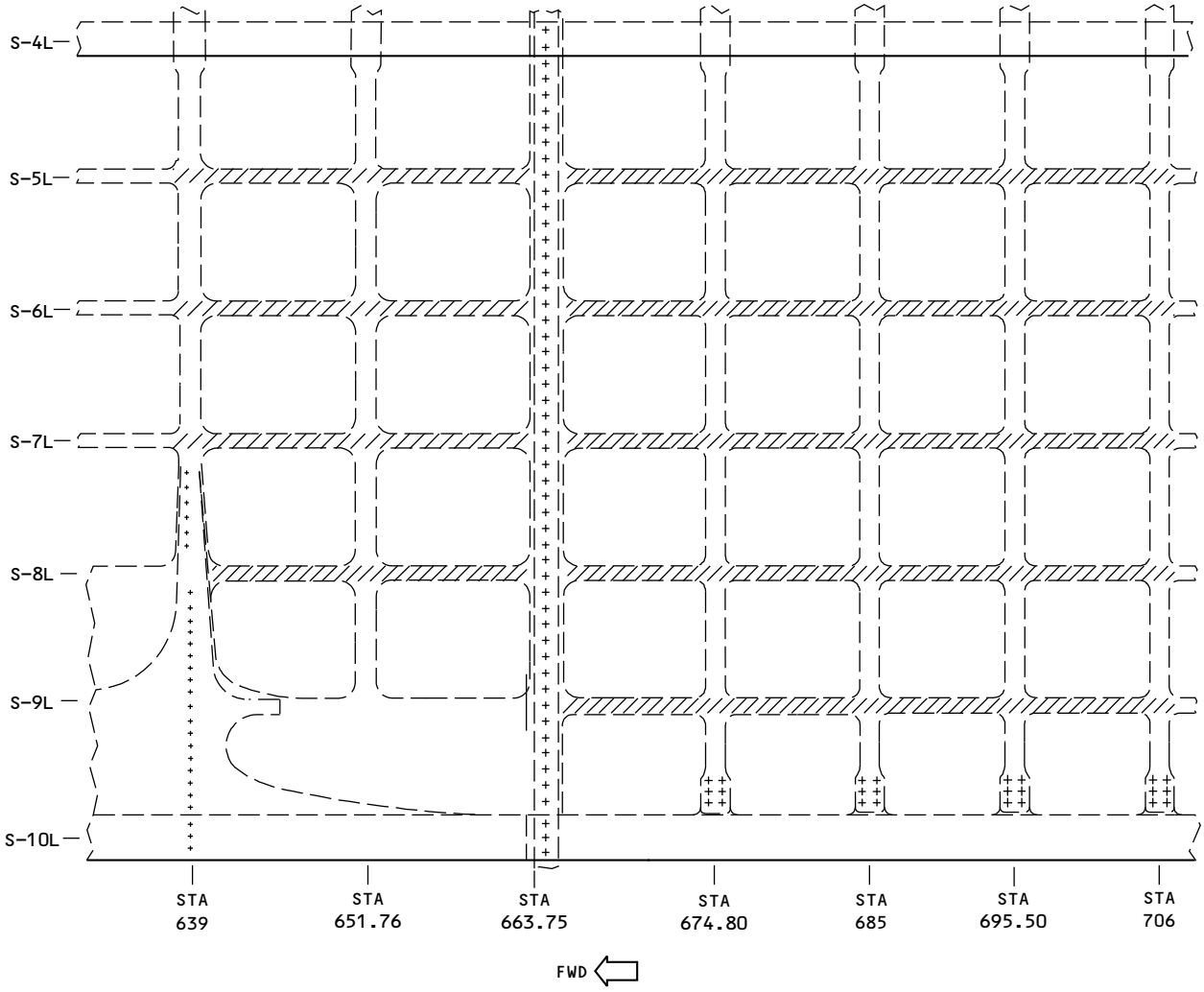

LEFT SIDE AS SHOWN;
RIGHT SIDE OPPOSITE

NOTES:

INSPECTION AREA. USE REFERENCE STANDARD NDT3090A DURING CALIBRATION FOR THIS INSPECTION AREA.

-200C AIRPLANES

2159870 S0000472197_V1

Inspection Areas
Figure 9 (Sheet 3 of 4)

BOEING PROPRIETARY - Copyright © Unpublished Work - See title page for details

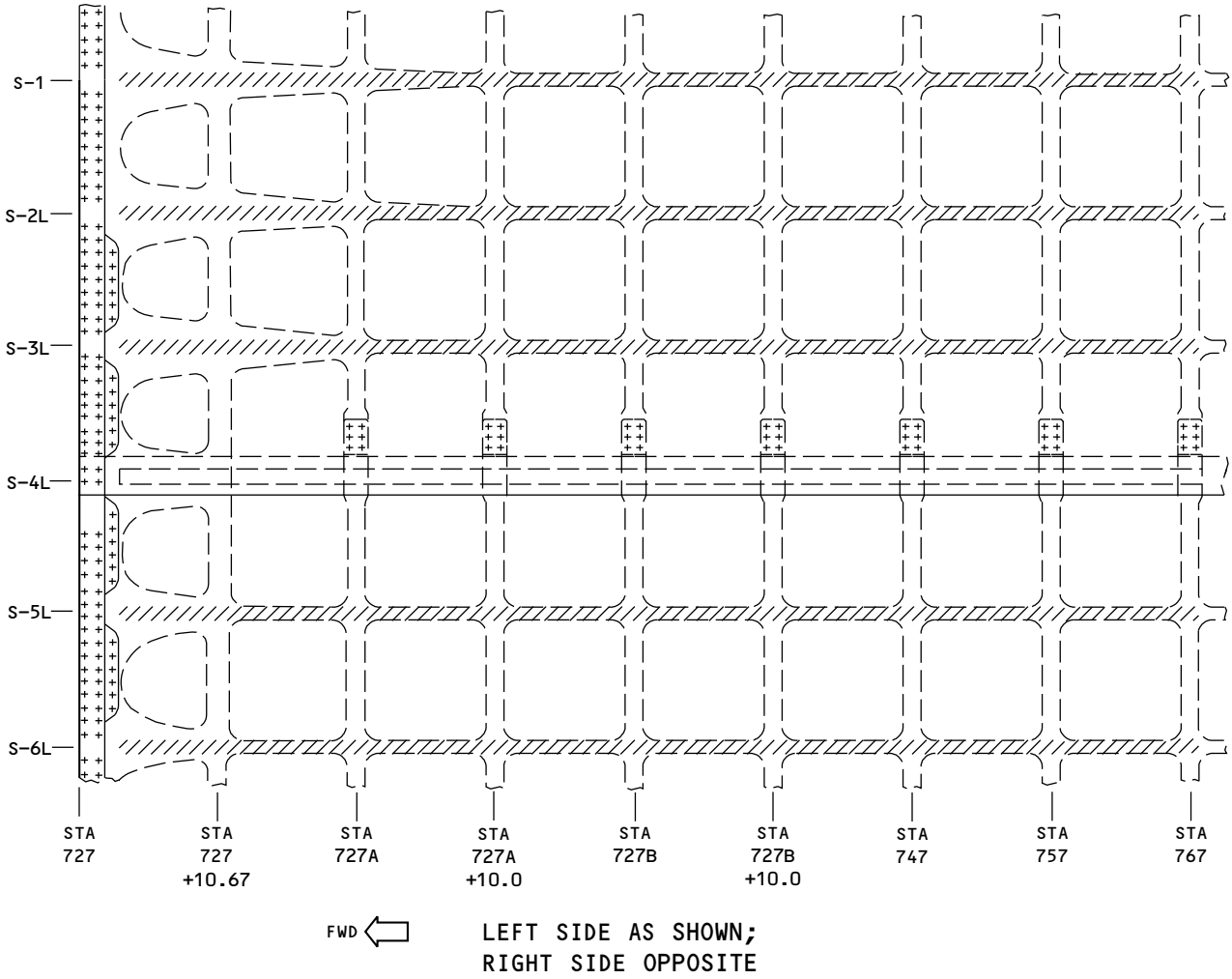

NOTES:

INSPECTION AREA. USE REFERENCE STANDARD NDT3090A DURING CALIBRATION FOR THIS INSPECTION.

-200 AIRPLANES

2159871 S0000472198_V1

Inspection Areas
Figure 9 (Sheet 4 of 4)

BOEING PROPRIETARY - Copyright © Unpublished Work - See title page for details

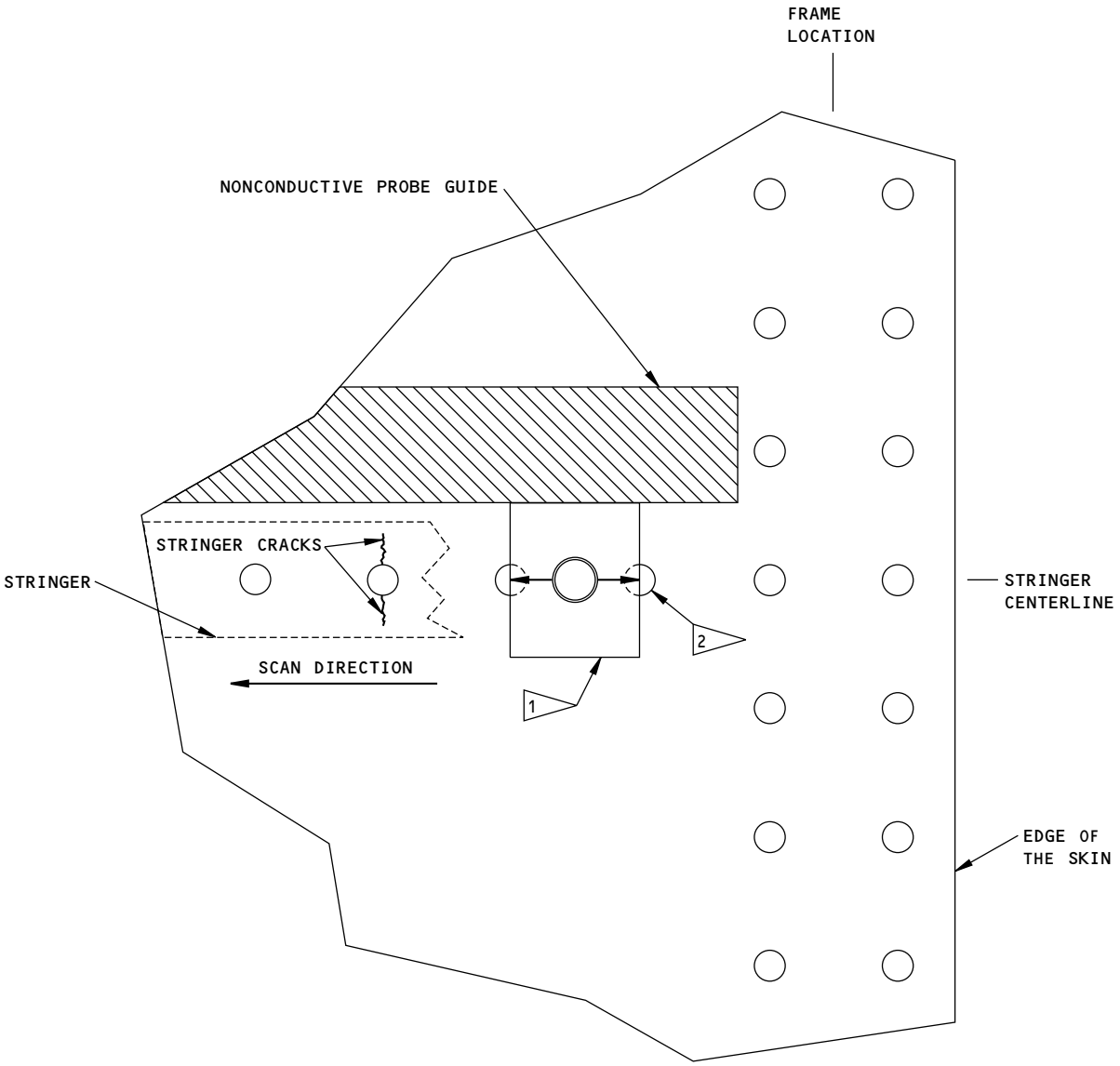

NOTES:

1. PUT THE PROBE HERE BETWEEN THE RIVETS AND BALANCE THE INSTRUMENT.
2. MOVE THE PROBE TO THIS RIVET UNTIL THIS RIVET SIGNAL OCCURS ON THE SCREEN DISPLAY. THEN DO THE PROBE SCAN ALONG THE RIVETS IN THE SCAN DIRECTION SHOWN ABOVE.

2159874 S0000472199_V1

Usual Instrument Balance Point and Inspection Start Point at the End of a Stringer
Figure 10

BOEING PROPRIETARY - Copyright © Unpublished Work - See title page for details

PART 6 - EDDY CURRENT

CONTROL CABIN - "F-N" WINDOW POST

1. **Purpose**

   A. Use this procedure to do an inspection for cracks identified at the fastener locations in the F-N window posts. The locations for the inspections are as follows:

      (1) Outer skin surface around the countersunk holes.

      (2) Inside hole surface of the internal steel doubler.

      (3) Countersunk surface of the internal steel doubler.

      (4) Inside hole surface of the windshield frame and sills.

      NOTE: See Figure 1 for the fastener locations to be examined.

   B. This procedure references four inspection procedures that use an impedance plane display instrument with a hand-held pencil probe and a rotary scanner. The inspection procedures are as follows:

      (1) "Aluminum Part Surface Inspection (Impedance Plane Display)", Part 6, 51-00-00, Procedure 23, to examine around the countersunk fastener holes on the outer skin surface.

      (2) "Open Hole Inspection in Steel with a Rotary Scanner", Part 6, 51-00-00, Procedure 19, to examine the fastener holes of the internal doubler (CRES steel 17-7 PH).

      (3) "Open Countersunk Hole Inspection in Steel with a Rotary Scanner", Part 6, 51-00-00, Procedure 22, to examine the countersunk surfaces of the fastener holes in the internal doubler (CRES steel 17-7 PH).

      (4) "Aluminum Part Fastener Hole Inspection (Rotary Scanner)", Part 6, 51-00-00, Procedure 16, to examine the fastener holes of the windshield frame and sill.

   C. Inspection of the corrosion resistant steel gusset, below the skin surface, is not included in this inspection procedure. It is not easy to examine the gusset because the thickness is only 0.025 inch (0.64 mm).

   D. Service Bulletin Reference: 737-53-1023

2. **Equipment**

   A. Refer to the applicable inspection procedure for the data on the instrument, probes, and reference standard to use.

3. **Prepare for the Inspection**

   A. Get access to the inspection areas.

   B. Look in all the holes and the countersunk surface for surface conditions that can cause noise signals to occur during the inspection. Look for these conditions:

      (1) A rough edge (burr).

      (2) Metal smears and/or rough surface (galling).

      (3) Grooves caused by a tool or fastener (gouge).

      (4) An out-of-round hole.

   C. Do a cleanup ream for the hole surface, if necessary, to remove one or more of the conditions specified in Paragraph 3.B.

BOEING PROPRIETARY - Copyright © Unpublished Work - See title page for details

D. Clean the countersunk surface to make it smooth if it is rough. Be careful not to damage the countersunk surface.

4. Instrument Calibration

A. Calibrate the instrument as specified in the calibration instructions for the applicable inspection procedure. Refer to the applicable inspection procedures specified below to do the complete inspection of the "F-N" window post.

(1) Refer to "Aluminum Part Surface Inspection (Impedance Plane Display)", Part 6, 51-00-00, Procedure 23, to examine around the countersunk fastener holes on the outer skin surface. Use the flush-head fastener reference standard 187A to calibrate the instrument.

(2) Refer to "Open Hole Inspection in Steel with a Rotary Scanner", Part 6, 51-00-00, Procedure 19, to examine the fastener holes of the internal doubler (CRES steel 17-7 PH).

(3) Refer to "Open Countersunk Hole Inspection in Steel with a Rotary Scanner", Part 6, 51-00-00, Procedure 22, to examine the countersunk surfaces of the fastener holes in the internal doubler (CRES steel 17-7 PH).

(4) Refer to "Aluminum Part Fastener Hole Inspection (Rotary Scanner)", Part 6, 51-00-00, Procedure 16, to examine the fastener holes of the windshield frame and sill.

5. Inspection Procedure

A. Examine the outer skin surface for cracks.

(1) Calibrate the instrument as specified in Paragraph 4.A.(1).

(2) Examine the outer skin surface for cracks around the countersunk holes. Refer to the instructions in Part 6, 51-00-00, Procedure 23, for the inspection around flush-head fasteners.

B. Examine the internal steel doubler for cracks. Figure 1 shows the usual structure configurations at the different fastener hole inspection locations of the steel doubler.

NOTE: Some fastener locations will have different fastener head diameters and countersunk hole depths but the same structure configuration. Do a careful visual inspection of the fastener location to identify the correct inspection procedure to use to examine the steel doubler.

(1) When the countersunk hole depth does not go into the doubler or when it does and the thickness remaining is 0.020 inch (0.51 mm) or more, do as follows:

(a) Calibrate the instrument as specified in Paragraph 4.A.(2).

(b) Examine the fastener holes of the doubler as specified in Part 6, 51-00-00, Procedure 19.

(2) When the countersunk hole depth goes into the doubler and the thickness remaining is less than 0.020 inch (0.51 mm) do as follows:

(a) Calibrate the instrument as specified in Paragraph 4.A.(3).

(b) Do an inspection of the countersunk surface of the doubler as specified in Part 6, 51-00-00, Procedure 22.

C. Examine the windshield frame and sill for cracks.

(1) Calibrate the instrument as specified in Paragraph 4.A.(4).

(2) Examine the fastener holes of the windshield frame and sill as specified in Part 6, 51-00-00, Procedure 16.

6. Inspection Results

A. Refer to the applicable inspection procedure for data to help make an analysis of the inspection results.

BOEING PROPRIETARY - Copyright © Unpublished Work - See title page for details

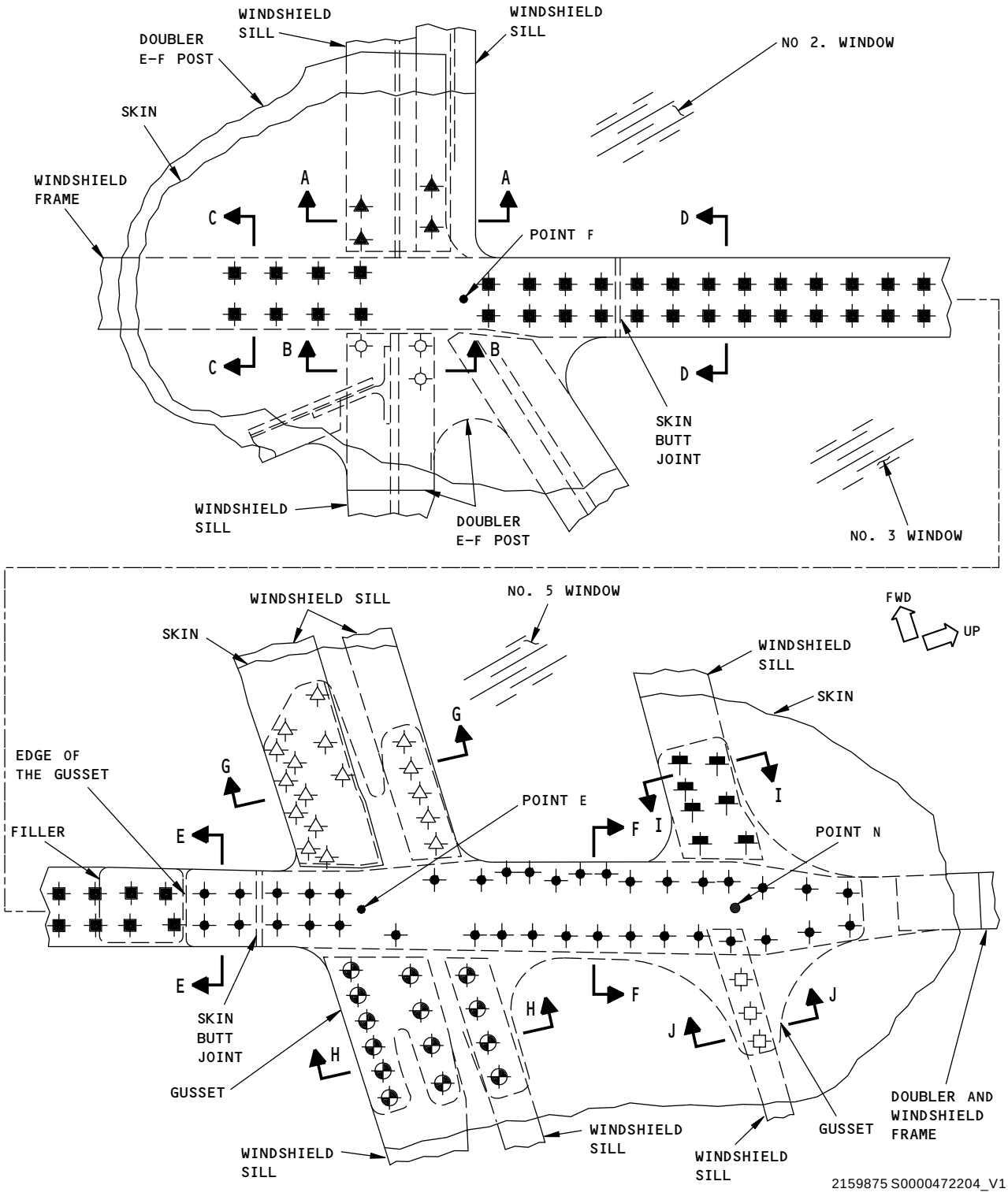

Inspection Areas of the Window Post Structure
Figure 1 (Sheet 1 of 6)

BOEING PROPRIETARY - Copyright © Unpublished Work - See title page for details

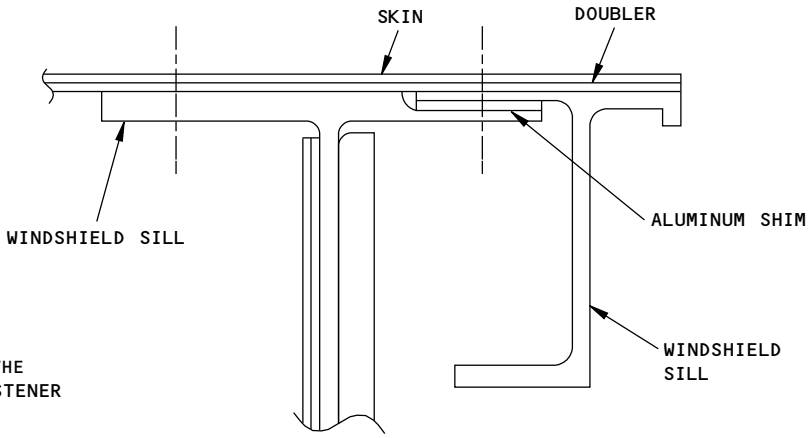

NOTE:

USUAL STRUCTURE FOR THE INSPECTION OF THE FASTENER LOCATIONS IDENTIFIED WITH THIS SYMBOL

A-A

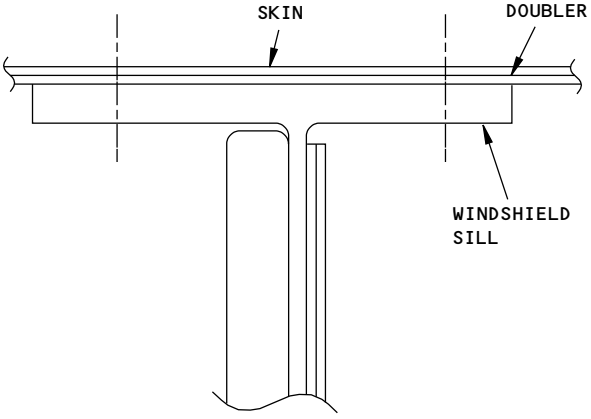

NOTE:

USUAL STRUCTURE FOR THE INSPECTION OF THE FASTENER LOCATIONS IDENTIFIED WITH THIS SYMBOL

B-B

2159876 S0000472205_V1

Inspection Areas of the Window Post Structure
Figure 1 (Sheet 2 of 6)

BOEING PROPRIETARY - Copyright © Unpublished Work - See title page for details

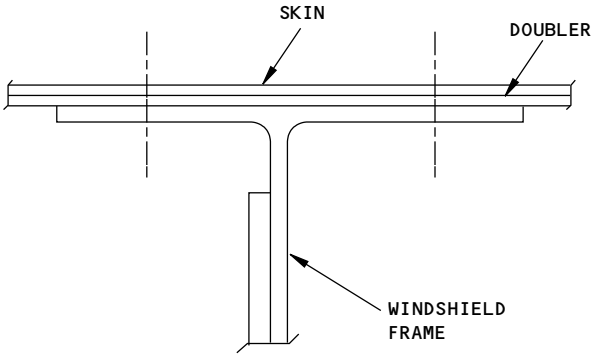

C–C

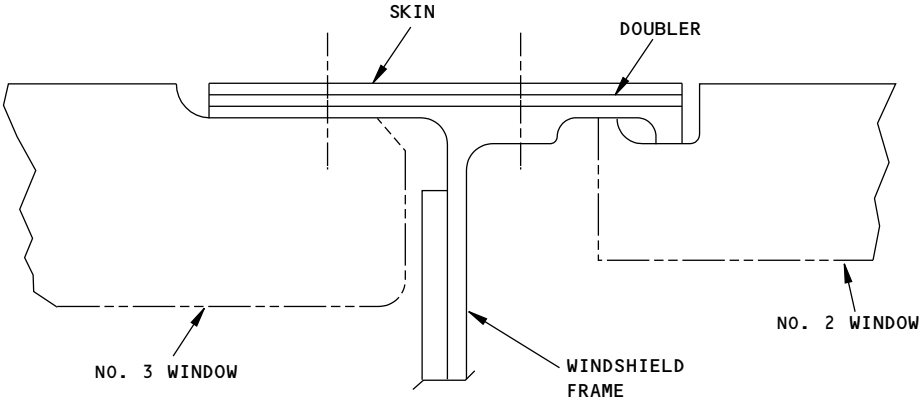

D–D

NOTE:

USUAL STRUCTURE FOR THE INSPECTION OF THE FASTENER LOCATIONS IDENTIFIED WITH THIS SYMBOL ✚

2159878 S0000472206_V1

Inspection Areas of the Window Post Structure
Figure 1 (Sheet 3 of 6)

BOEING PROPRIETARY - Copyright © Unpublished Work - See title page for details

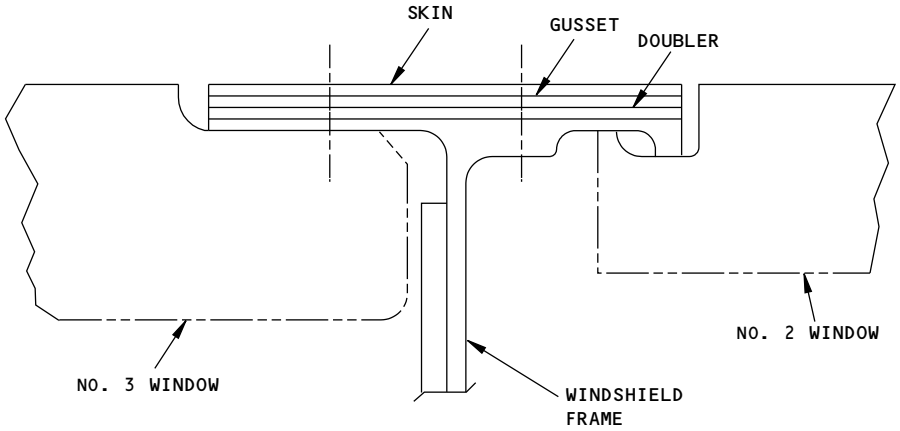

E-E

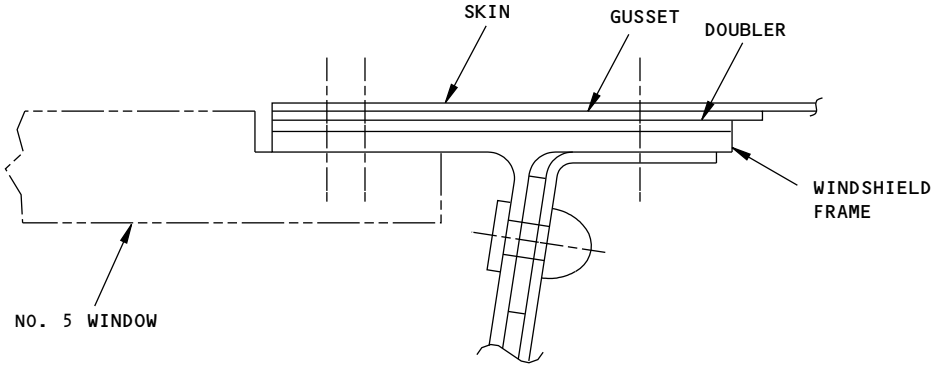

F-F

NOTE:

USUAL STRUCTURE FOR THE INSPECTION OF THE FASTENER LOCATIONS IDENTIFIED WITH THIS SYMBOL ⊕

2159879 S0000472207_V1

Inspection Areas of the Window Post Structure
Figure 1 (Sheet 4 of 6)

BOEING PROPRIETARY - Copyright © Unpublished Work - See title page for details

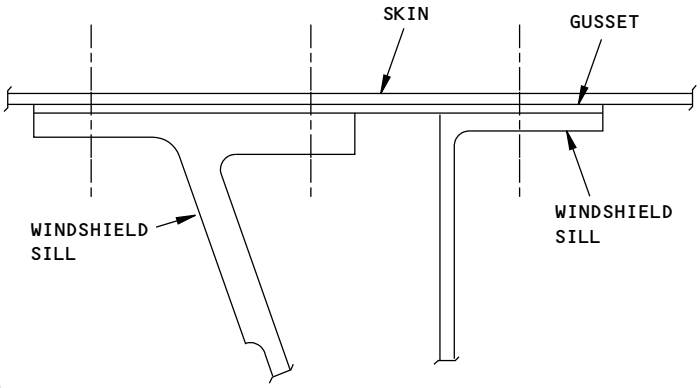

NOTE:

USUAL STRUCTURE FOR THE INSPECTION OF THE FASTENER LOCATIONS IDENTIFIED WITH THIS SYMBOL

G-G

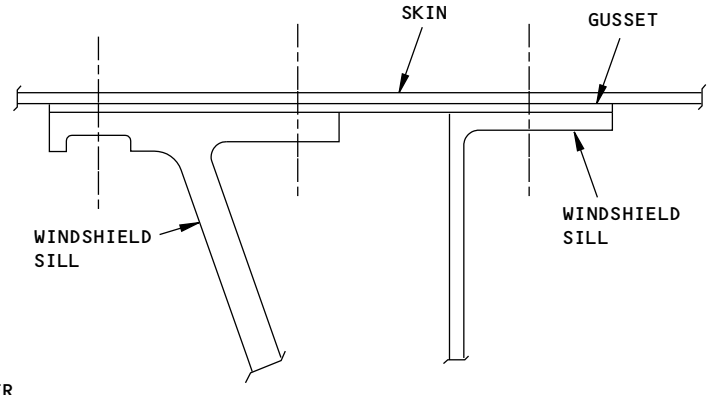

NOTE:

USUAL STRUCTURE FOR THE INSPECTION OF THE FASTENER LOCATIONS IDENTIFIED WITH THIS SYMBOL

H-H

2159880 S0000472208_V1

Inspection Areas of the Window Post Structure
Figure 1 (Sheet 5 of 6)

BOEING PROPRIETARY - Copyright © Unpublished Work - See title page for details

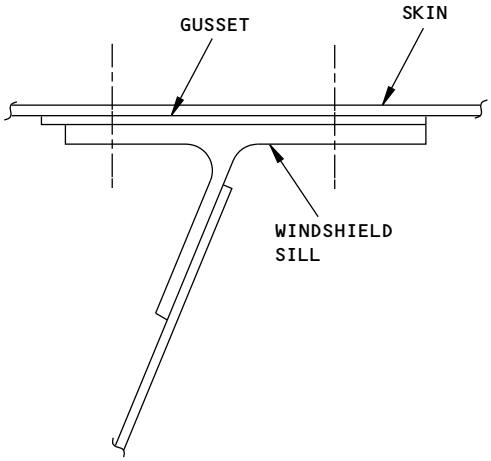

NOTE:

USUAL STRUCTURE FOR THE INSPECTION OF THE FASTENER LOCATIONS IDENTIFIED WITH THIS SYMBOL

I-I

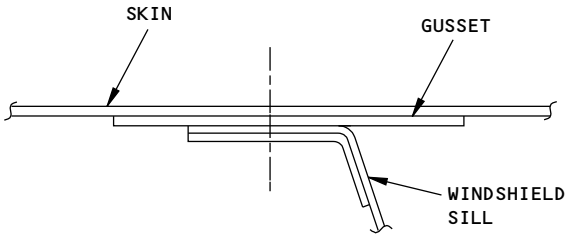

NOTE:

USUAL STRUCTURE FOR THE INSPECTION OF THE FASTENER LOCATIONS IDENTIFIED WITH THIS SYMBOL

J-J

2159881 S0000472209_V1

Inspection Areas of the Window Post Structure
Figure 1 (Sheet 6 of 6)

BOEING PROPRIETARY - Copyright © Unpublished Work - See title page for details

PART 6 - EDDY CURRENT

BS 1016 AFT PRESSURE BULKHEAD WEB AT THE "Y" CHORD

1. **Purpose**

   A. This inspection examines the BS 1016 pressure bulkhead web for cracks that start at fastener holes and go in the inboard and outboard direction. The inspection area of the web includes the area around the aft row of fasteners of the “Y” chord, between the steel safety chords of Stringers 15 left and 15 right. See Figure 1 for the inspection area.

2. **Equipment**

   A. General

      (1) Use inspection equipment that can be calibrated on the reference standard as specified in Paragraph 4.

      (2) Refer to Part 1, 51-01-00, for data about the equipment manufacturers.

   B. Instrument

      (1) Use an eddy current instrument that:

         (a) Has an impedance plane display or a meter display.

         (b) Operates in a frequency range of 2 to 4 kHz.

      (2) The instruments specified below were used to help prepare this procedure:

         (a) Miz 10A (Meter display); Zetec, Inc.

         (b) Phasec 2200 (Impedance plane display); Hocking/Krautkramer

         (c) Phasec 1.1 (Impedance plane display); Hocking/Krautkramer

         (d) NDT 19e (Impedance plane display); Staveley, Inc.

   C. Probes

      (1) Use a spot probe with these properties:

         (a) A diameter from 0.300 inch (7.6 mm) to 0.320 inch (8.1 mm).

         (b) Operates at a frequency of 3 kHz.

         (c) Is flat at the end that will touch the “Y” chord.

         (d) Has a height of no more than 0.50 inch (12.7 mm).

      (2) The probes specified below were used to help prepare this procedure:

         NOTE: Probes different from those identified below can be used if they have the properties identified in Paragraph 2.C.(1) above.

         (a) SPO 1071; Nortec/Staveley

         (b) NEC-4088-1; NDT Engineering

   D. Reference Standards

      (1) Use reference standard ANDT3016-B. See Figure 2 for data about the reference standard.

3. **Prepare for the Inspection**

   A. Go through door 3701L to get access to the aft side of the BS 1016 pressure bulkhead.

   B. Remove loose material from the inspection surface. Do not remove the corrosion inhibiting compound.

BOEING PROPRIETARY - Copyright © Unpublished Work - See title page for details

4. **Instrument Calibration**

NOTE: Refer to the instrument instruction manual for operation instructions.

A. Set the instrument frequency to 3 kHz.

B. Put the probe at probe position 1 on the area of reference standard ANDT3016-B that does not have a notch as shown in Detail I in Figure 3.

C. Balance the instrument.

D. Set the lift-off as follows:

(1) If a meter display instrument is used: adjust the phase control so that the meter needle moves no more than 5 percent of full scale for probe-to-part distances of up to 0.006 inch (0.15 mm). This is the thickness of two sheets of paper (approximately).

(2) If an impedance plane display instrument is used: adjust the phase control so that the lift-off signal moves horizontally to the left as shown in Detail III in Figure 3.

E. Adjust the balance point to the position shown in Figure 3. See Detail II for the meter display instrument and Detail III for the impedance plane display instrument.

F. Adjust the instrument sensitivity as follows:

(1) Put the probe at probe position 2 on reference standard ANDT3016-B and move the probe to get a maximum notch signal. See Detail I in Figure 3.

(2) If a meter display instrument is used: adjust the instrument sensitivity to get a notch signal that is 60 percent of full scale (40 percent of full scale higher than the balance point). See Detail II in Figure 3.

(3) If an impedance plane display instrument is used: adjust the instrument sensitivity to put the notch signal at 60 percent of full screen height (40 percent higher than the balance point). See Detail III in Figure 3.

G. Move the probe from probe position 2 in the direction of the reference standard's edge until a signal from the edge starts to show. Identify the distance the probe is from the edge; this will be the maximum scan distance that you will use during the inspection.

H. Balance the instrument again at probe position 1 and make sure the lift-off is set as specified in Paragraph 4.D.

5. **Inspection Procedure**

A. Examine the area of the BS 1016 pressure bulkhead web that is behind the "Y" chord for cracks as follows:

(1) Calibrate the instrument as specified in Paragraph 4.

(2) Move the probe around each fastener head in the aft fastener row identified in Figure 1 from Stringer 15 left to Stringer 15 right. During the inspection at each fastener location:

(a) Move the probe around each fastener the maximum scan distance identified during calibration (see Paragraph 4.G.) and monitor the instrument display for crack signals. It is not mandatory to examine the area between the aft and the forward fasteners if the probe does not fit between the fasteners (See Figure 1, flagnote 1).

(b) Identify the crack length and stringer location for all crack indications.

(c) Do not do this inspection at the fasteners that go through the steel safety straps.

BOEING PROPRIETARY - Copyright © Unpublished Work - See title page for details

6. Inspection Results

A. Signals that are 20 percent higher than the balance point are indications of possible cracks. The inspection locations that cause these signals must be examined some more.

B. Compare the signals you get during the inspection to the signals you got from the reference standard during calibration.

C. Make sure there are no unwanted conductive materials in the inspection area that can cause an incorrect crack indication to occur.

D. A crack can occur in the web near the edge of the “Y” chord. If a crack occurs in the web at the edge of the “Y” chord, the signal will go up and will not return to the balance point as the probe is moved to the crack because of the edge effect condition. See Figure 4 for an impedance plane screen display that shows a signal from a notch that is near an edge.

E. To make sure you have a crack, you can do a high frequency eddy current inspection as specified in Part 6, 51-00-00, Procedure 4, or Part 6, 51-00-00, Procedure 23, from the forward side of the BS 1016 pressure bulkhead at the location of the crack indication.

BOEING PROPRIETARY - Copyright © Unpublished Work - See title page for details

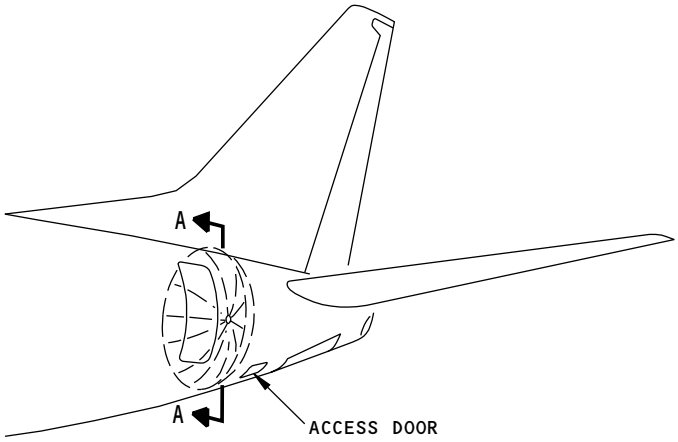

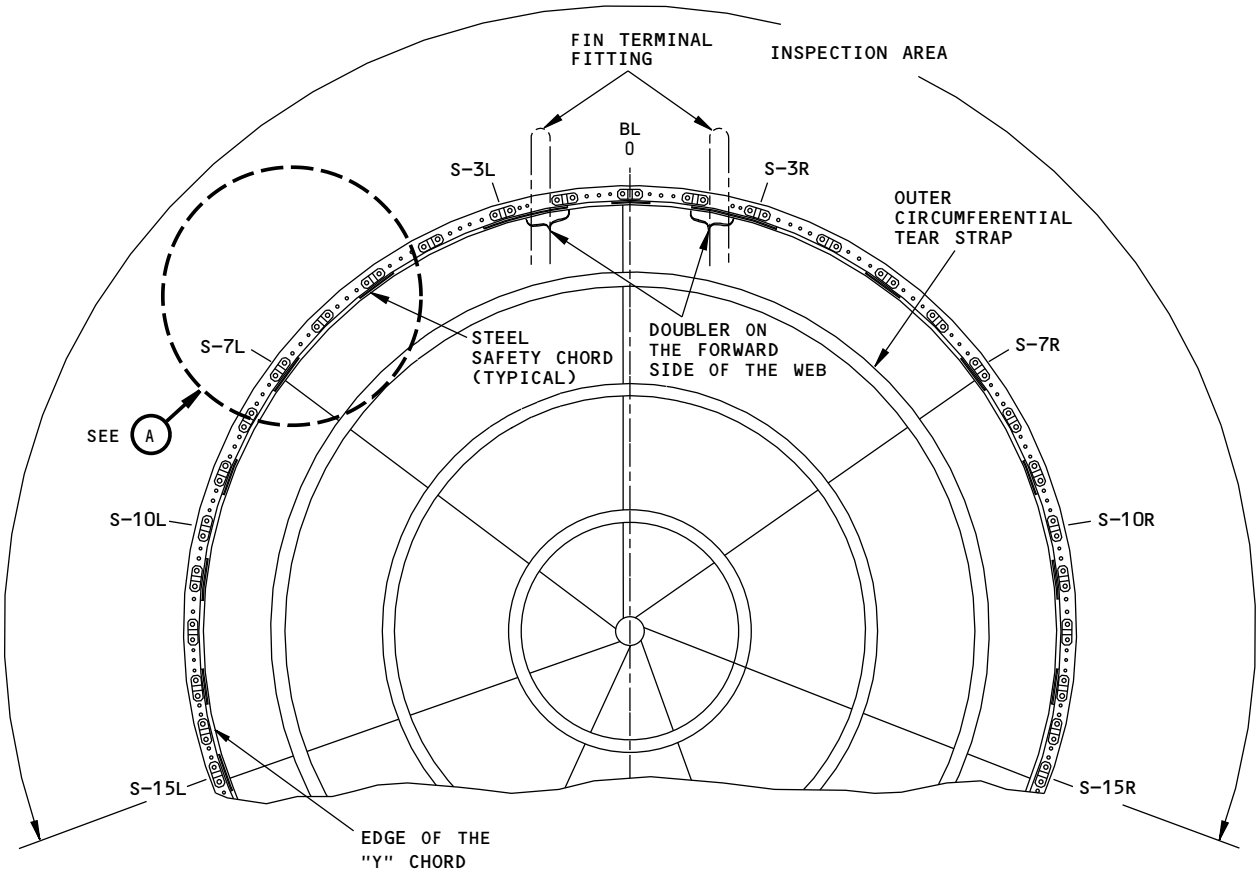

A-A
AFT VIEW

2159883 S0000472211_V1

Pressure Bulkhead - BS 1016
Figure 1 (Sheet 1 of 3)

BOEING PROPRIETARY - Copyright © Unpublished Work - See title page for details

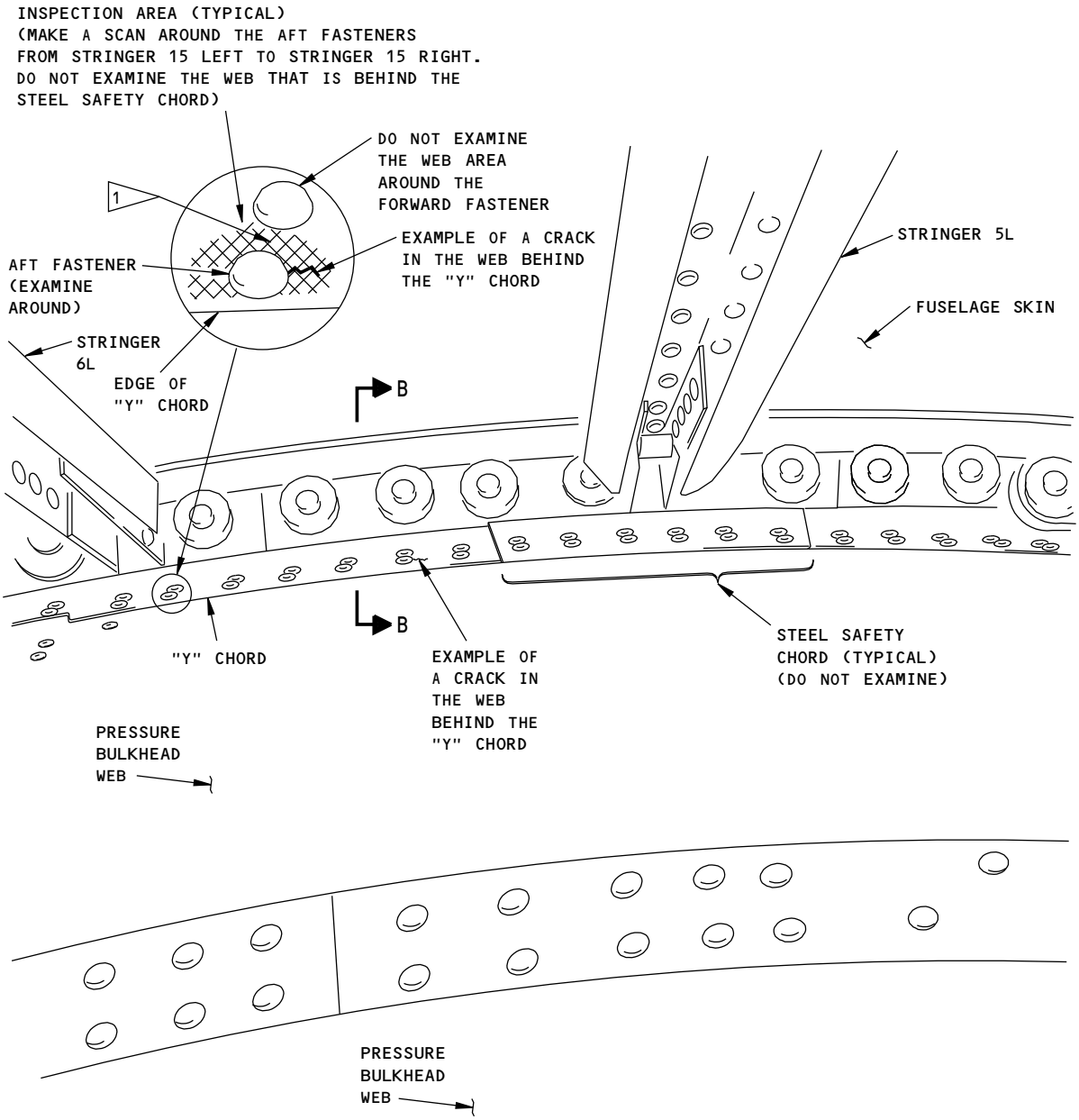

VIEW AS YOU LOOK FORWARD FROM THE AFT SIDE OF THE BS 1016 PRESSURE BULKHEAD

A

NOTES:

INSPECTION AREA

1 IT IS NOT MANDATORY TO EXAMINE THE AREA BETWEEN THE AFT AND THE FORWARD FASTENERS IF THE PROBE DOES NOT FIT BETWEEN THE FASTENERS.

- THE LEFT SIDE IS SHOWN; THE RIGHT SIDE IS ALMOST THE SAME

2159884 S0000472212_V1

Pressure Bulkhead - BS 1016
Figure 1 (Sheet 2 of 3)

BOEING PROPRIETARY - Copyright © Unpublished Work - See title page for details

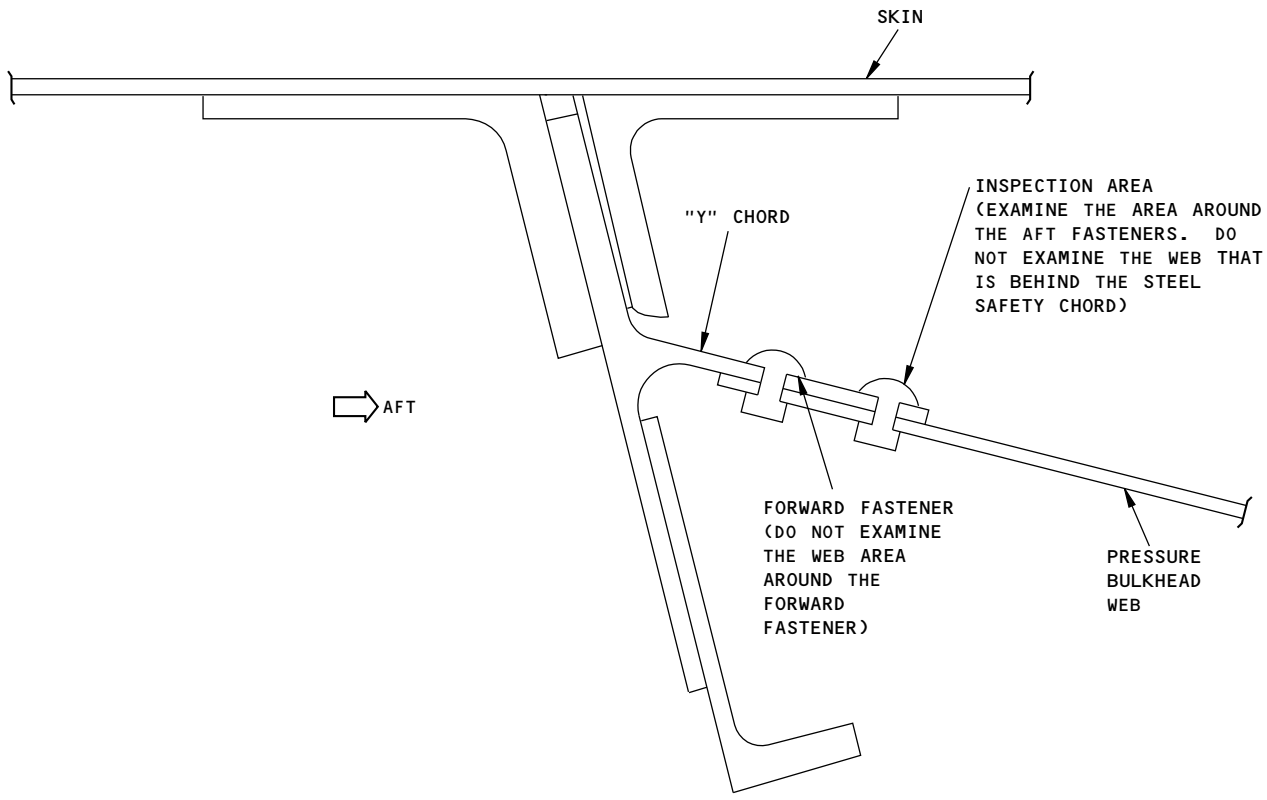

B–B

2159886 S0000472213_V1

Pressure Bulkhead - BS 1016
Figure 1 (Sheet 3 of 3)

BOEING PROPRIETARY - Copyright © Unpublished Work - See title page for details

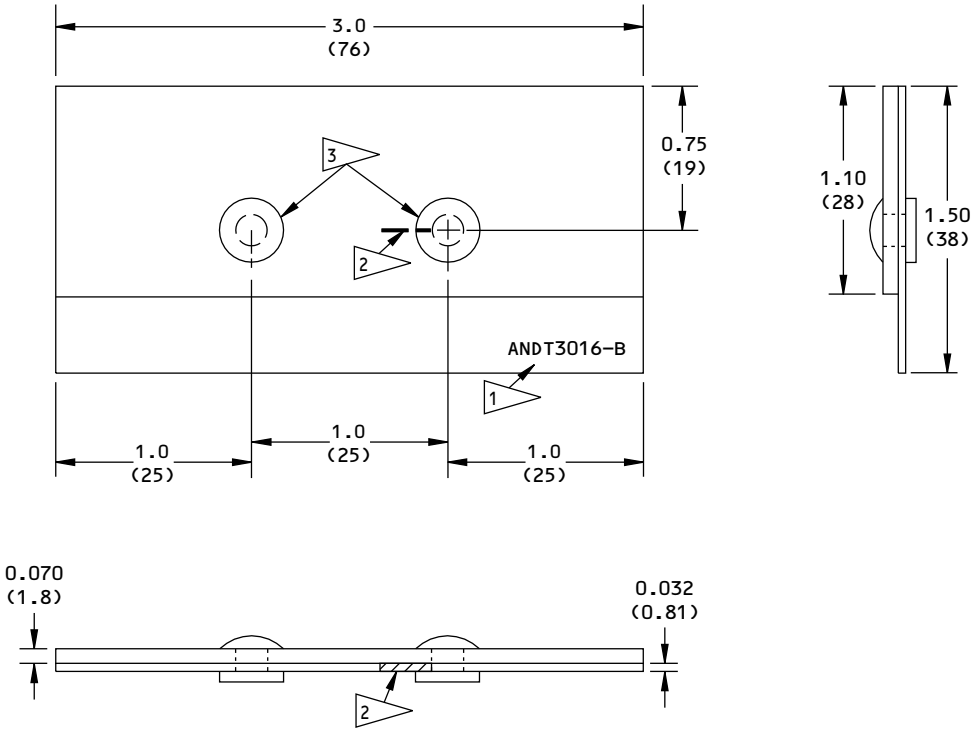

NOTES:

- ALL DIMENSIONS ARE IN INCHES
  (MILLIMETERS ARE IN PARENTHESES)
- TOLERANCE (UNLESS SPECIFIED DIFFERENTLY):

INCHES	MILLIMETERS
X.XXX = ±0.005	X.XX = ±0.1
X.XX = ±0.025	X.X = ±0.5
X.X = ±0.050	X = ±1.0

- SURFACE ROUGHNESS: 125 Ra OR BETTER
- MATERIAL: 2024-T3 OR T4 CLAD OR BARE ALUMINUM

1 ETCH OR STEEL STAMP THE REFERENCE STANDARD NUMBER ANDT3016-B. PUT A LETTER "A" IN FRONT OF THE REFERENCE STANDARD NUMBER TO SHOW THAT IT HAS ALODINED RIVETS. SEE FLAGNOTE 1.

2 EDM NOTCH:
LENGTH: 0.200 (5.1)
DEPTH: THROUGH THICKNESS
WIDTH: 0.020 (0.51) MAXIMUM
THE NOTCH MUST BE WITHIN ±0.005 (0.10) OF THE CENTER OF THE HOLE.

3 BACR15BB5D-4 ALUMINUM PROTRUDING-HEAD RIVET (MS20470D5 OPTIONAL). THESE RIVETS MUST HAVE A CONVERSION COATED (ALODINED) FINISH. TO MAKE SURE THE FINISH IS ALODINE, REFER TO PART 1, 51-06-01. INSTALL THE RIVETS AS SPECIFIED IN PART 1, 51-01-04.

2159887 S0000472214_V1

Reference Standard ANDT3016-B
Figure 2

BOEING PROPRIETARY - Copyright © Unpublished Work - See title page for details

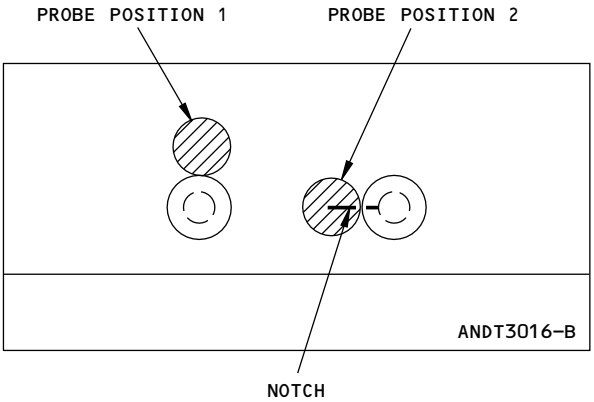

PROBE POSITIONS ON THE REFERENCE STANDARD
DETAIL I

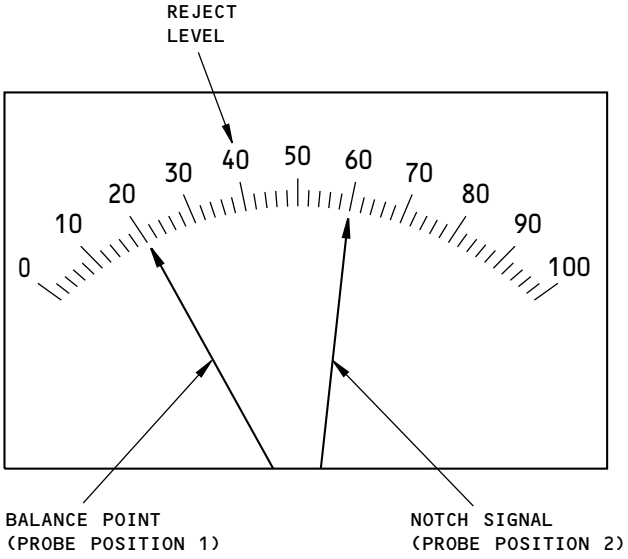

METER DISPLAY
DETAIL II

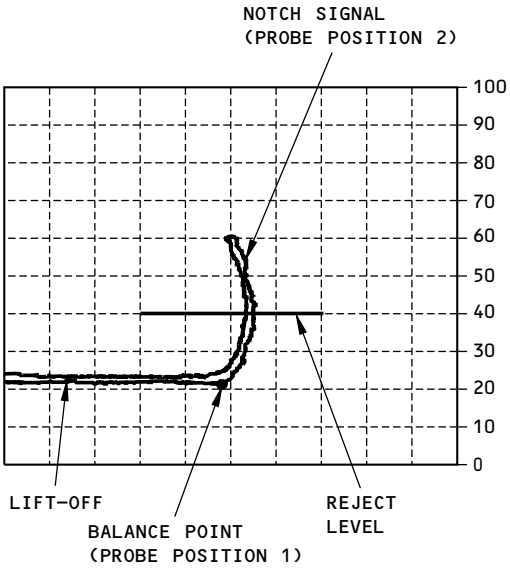

IMPEDANCE PLANE DISPLAY
DETAIL III

2159888 S0000472215_V1

Instrument Calibration
Figure 3

BOEING PROPRIETARY - Copyright © Unpublished Work - See title page for details

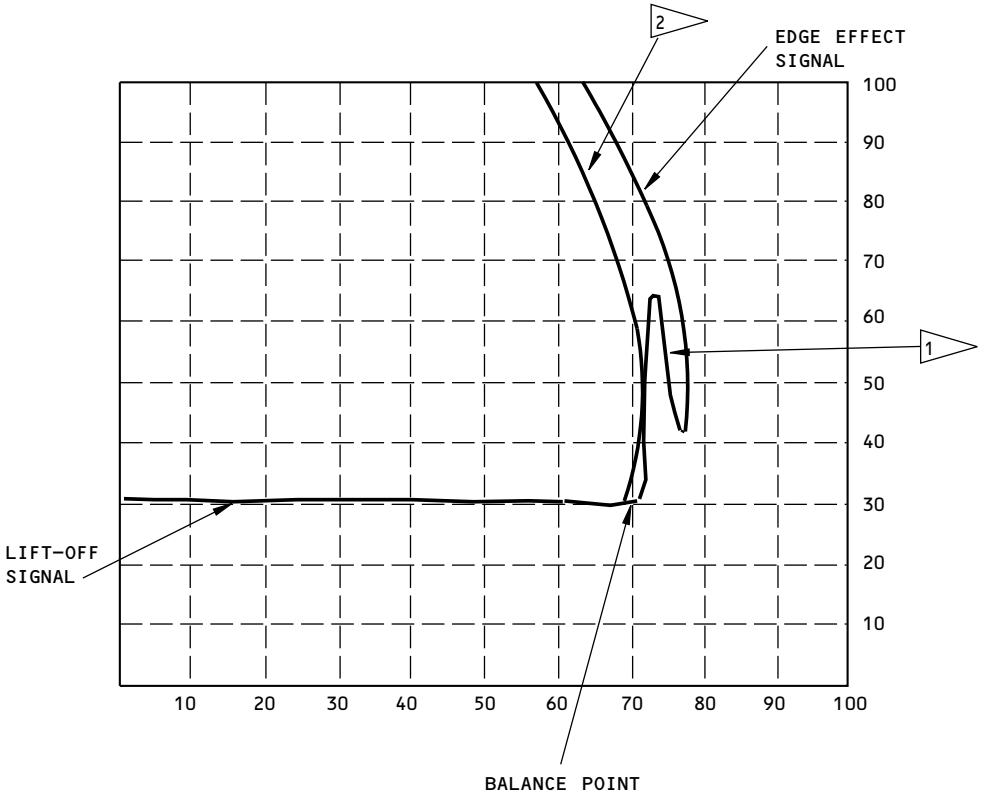

NOTE:

1 SIGNAL FROM A NOTCH THAT IS AT THE LOWER EDGE OF THE FASTENER HOLE.

2 USUAL EDGE EFFECT SIGNAL FROM THE EDGE OF THE "Y" CHORD.

2159889 S0000472216_V1

Screen Display Example
Figure 4

BOEING PROPRIETARY - Copyright © Unpublished Work - See title page for details

SHEAR TIED FRAMES AT STRINGER 17 FROM STATIONS 259.5 TO 540 AND FROM 727 TO 1016

1. Purpose

A. This surface eddy current procedure is used to find cracks in the shear tied frames at stringer 17. Impedance plane display instruments or meter display instruments can be used for this inspection procedure.

B. The inspection areas of the frames between stations 259.5 and 540 are immediately below the passenger floor at approximately WL 207. See Figure 1 and Figure 2 for this inspection area.

C. The inspection areas of the frames between stations 727 to 1016 are immediately above the passenger floor at approximately WL 209. There are 3 locations on these frames where the scans must be done. See Figure 1 and Figure 3 thru Figure 5 for these inspection areas.

D. 737 Supplemental Structural Inspection Document (D6-37089 and D6-82669) Reference:

(1) Item: F-33B

(2) Item: F-34B

2. Equipment

A. General

(1) Use inspection equipment that can be calibrated on the reference standard as specified in Paragraph 4.

(2) Refer to Part 1, 51-01-00, for data about the equipment manufacturers.

B. Instruments

(1) Refer to Part 6, 51-00-00, Procedure 4, for meter display instrument data.

(2) Refer to Part 6, 51-00-00, Procedure 23, for impedance plane display instrument data.

C. Probes

(1) Use a shielded pencil probe that:

(a) Has a shaft diameter of 0.13 inch (3.3 mm) or less.

(b) Is angled at 90 degrees and has a 0.150 inch (3.8 mm) drop (or more).

(c) Has a shaft length between 2 and 5 inches (50 and 127 mm)

(d) Operates between 100 and 500 kHz.

NOTE: An angled probe with a 0.125 inch (3.2 mm) diameter can be used for most of the inspection areas. You could possibly find the 0.09 inch (2.3 mm) (or less) diameter probe is necessary to do the scans on some of the fail-safe chords. See Figure 5 to see how there is a small clearance for the probe between the clip edge and the flange of the fail-safe chord.

(2) The surface probe specified below was used to help prepare this procedure:

(a) MTF902-50; NDT Engineering

(b) MMTF9015-50 (0.070 to 0.075 inch (1.8 to 1.9 mm) diameter); NDT Engineering

D. Reference Standards

(1) Reference standard 126. See Part 6, 51-00-00, Procedure 4, or Part 6, 51-00-00, Procedure 23, for the data necessary to make reference standard 126.

BOEING PROPRIETARY - Copyright © Unpublished Work - See title page for details

3. **Prepare for the Inspection**

A. Prepare for the inspection of the inner frame chords between stations 259.5 and 540 at S-17, as follows:

(1) Remove the passenger floor boards from each side of the airplane that are adjacent to the frames between stations 259.5 and 540 to get access to the scan area of the inner frame chords.

(2) Make sure the scan areas on the inner frame chords are clean immediately below the passenger floor. Remove sealant as necessary. Remove paint only if it is loose. See Figure 2 for the scan area on the inner frame chords.

NOTE: Alternative access to the inspection locations between stations 259.5 and 540 is from the cargo area in the lower lobe. But, some of the inspection areas below the floor are not easy to access from the cargo area.

B. Prepare for the inspection of the frames between stations 727 and 1016 at S-17, as follows:

(1) Make sure the three inspection areas on the frames from stations 727 to 1016 are clean. Remove sealant as necessary. Remove paint only if it is loose. See Figure 3, Figure 4 and Figure 5 for the inspection areas between stations 727 and 1016.

4. **Instrument Calibration**

A. Calibrate the instrument as follows:

(1) Refer to Part 6, 51-00-00, Procedure 4, if a metered instrument is used.

(2) Refer to Part 6, 51-00-00, Procedure 23, if an impedance plane instrument is used.

5. **Inspection Procedure**

A. Do the inspection of the inner frame chords between stations 259.5 and 540 on each side of the airplane as follows:

(1) See Figure 2 for the scan area on the inner chord immediately below the passenger floor.

(2) Put this probe adjacent to the lower side of the second fastener and balance the instrument as shown in Figure 2.

(3) Put the probe on the inner frame chord in the scan area as near to floor beam web as possible. See Figure 2.

(4) Move the probe in a vertical direction in the scan area that is between the floor beam web and the rivet as shown in Figure 2. Make sure to move the probe in a vertical direction as many times as necessary to examine the full scan area.

B. Do the inspection of the frames between stations 727 and 1016 on each side of the airplane as follows (there are 3 different inspection areas on these aft frames):

(1) Do the inspection of the frame chords where they attach to the inboard chord at WL 209 as follows:

(a) See Figure 3 to do the inspection on the frame around the rivet that attaches the frame chord to the inboard chord.

(b) Put the probe on the outboard side of the frame at WL 209 adjacent to the rivet shown in Figure 3.

(c) Balance the instrument.

(d) Do a 360 degree scan for cracks on the frame around the rivet end.

BOEING PROPRIETARY - Copyright © Unpublished Work - See title page for details

(2) Do the inspection on the forward side of the frame webs at WL 209 on each side of the airplane as follows:

(a) See Figure 4 to do the inspection on the forward side of the frame web around the rivets at WL 209.

(b) Put the probe on the forward side of the frame web at WL 209 adjacent to one of the rivets shown in Figure 4.

(c) Balance the instrument.

(d) Do a 360 degree scan for cracks on the frame web around all the rivets in the frame web at WL 209. See Figure 4.

(3) Do the inspection on the aft side of the fail-safe chord at WL 209 on each side of the airplane as follows:

NOTE: It is possible that there is not sufficient clearance for the 0.125 inch (3.2 mm) diameter probe on some of the fail-safe chords. It can be necessary to use the 0.090 inch (2.3 mm) diameter probe if there is a small clearance for the probe.

(a) See Figure 5 to do the inspection on the aft side of the fail-safe chord at WL 209.

(b) Put the probe on the fail-safe chord, adjacent to the edge of the clip at WL 209 as shown in Figure 5.

(c) Balance the instrument.

(d) Do a vertical scan on the fail safe chord along the edge of the clip. Use the edge of the clip as a probe guide during the scan. Make sure the scan goes beyond the horizontal centerline of the rivets on the clip. See Figure 5 to see where the possible crack is shown in the fail-safe chord.

6. Inspection Results

A. For metered instruments, refer to Part 6, 51-00-00, Procedure 4, for inspection results.

B. For impedance plane instruments, refer to Part 6, 51-00-00, Procedure 23, for inspection results.

BOEING PROPRIETARY - Copyright © Unpublished Work - See title page for details

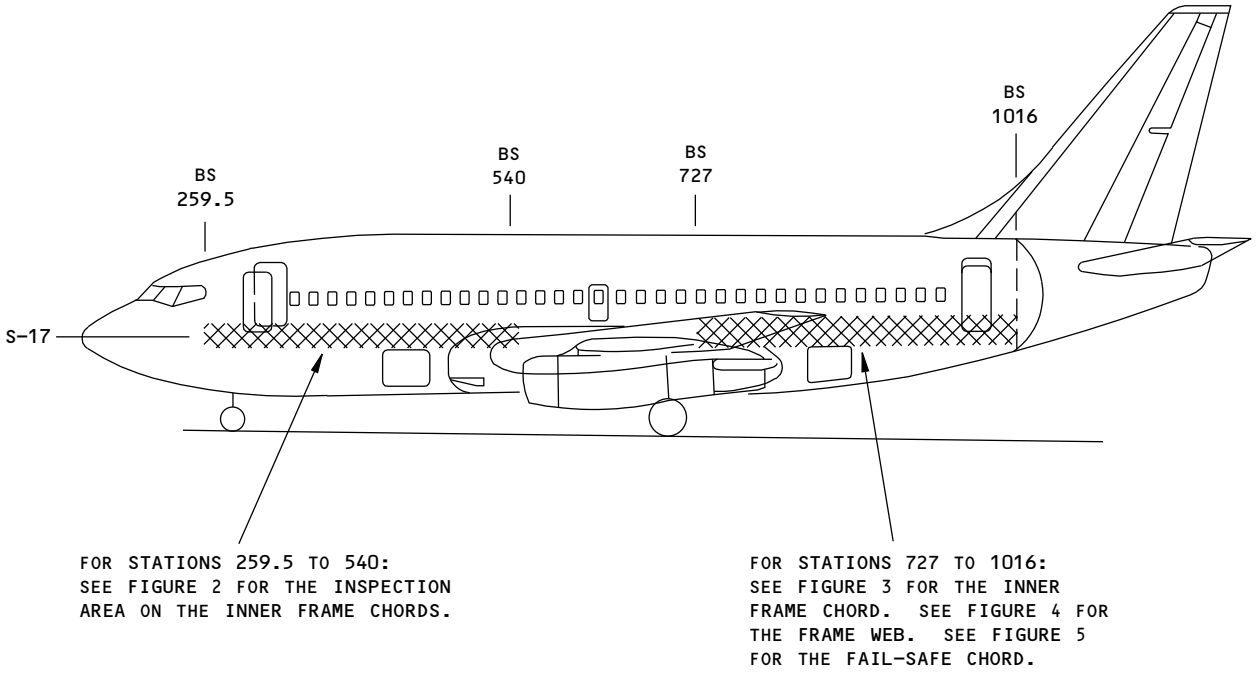

INSPECTION LOCATIONS

NOTES

- THE INSPECTION LOCATIONS ARE ON THE FRAMES AT FLOOR BEAM LOCATIONS ALONG STRINGER 17. THIS INSPECTION IS DONE ON THE LEFT AND RIGHT SIDES OF THE AIRPLANE.

2159891 S0000472218_V1

Inspection Locations
Figure 1

BOEING PROPRIETARY - Copyright © Unpublished Work - See title page for details

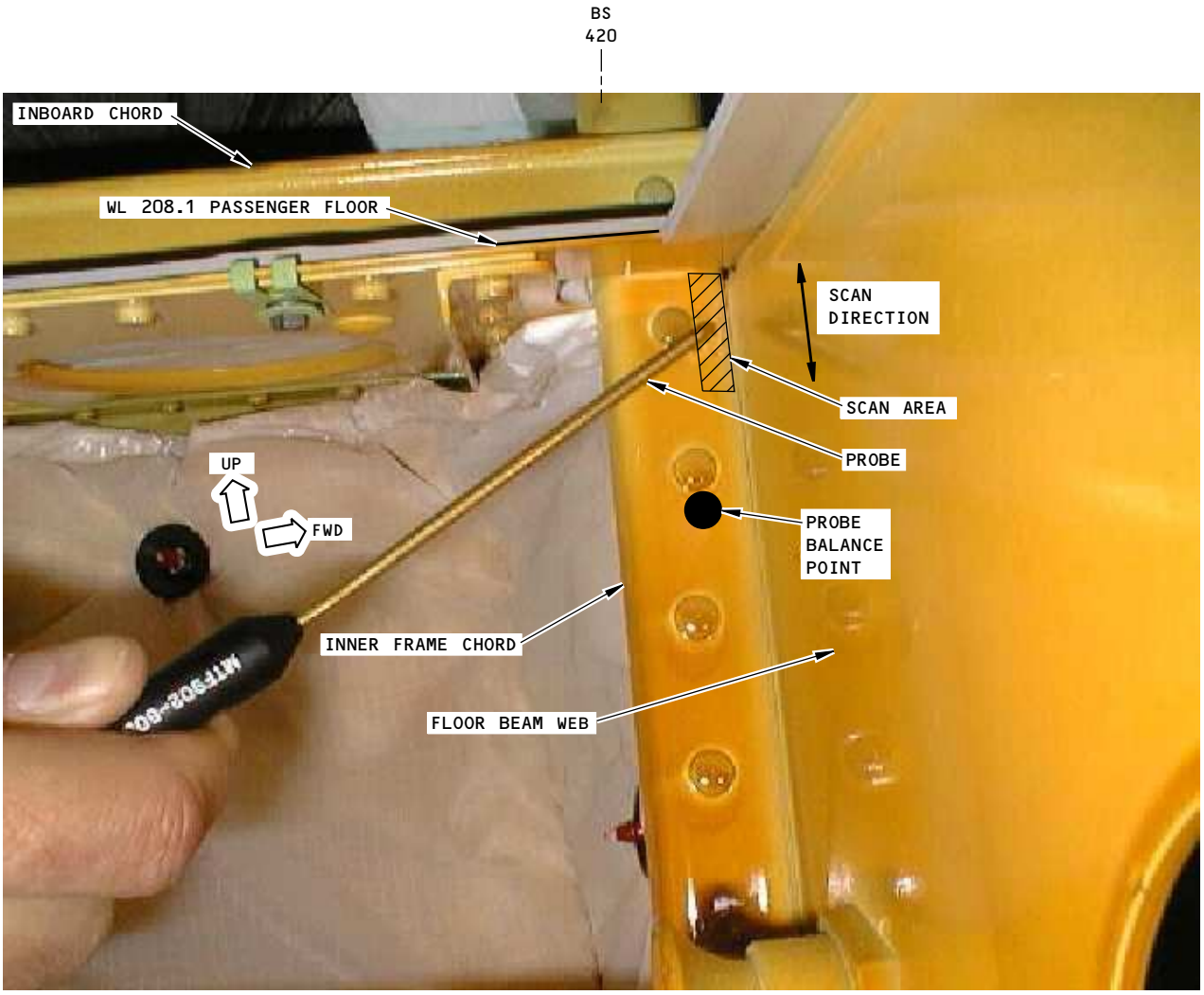

THE FRAME ON THE LEFT SIDE OF THE AIRPLANE IS SHOWN AS YOU LOOK OUTBOARD

NOTES:

- THIS VIEW SHOWS THE INBOARD SIDE OF THE INNER FRAME CHORD AT STATION 420 IMMEDIATELY BELOW THE PASSENGER FLOOR. THE FLOOR BOARD HAS BEEN REMOVED AND ACCESS IS FROM THE PASSENGER FLOOR. THIS VIEW IS TYPICAL FOR ALL STATIONS FROM STATIONS 259.5 TO 540.
- DO A VERTICAL SCAN ON THE INNER FRAME CHORD, IMMEDIATELY ADJACENT TO THE FLOOR BEAM WEB, AS SHOWN ABOVE.

2159894 S0000472219_V1

Inner Frame Chord Inspection Areas from BS 259.5 to 540
Figure 2

BOEING PROPRIETARY - Copyright © Unpublished Work - See title page for details

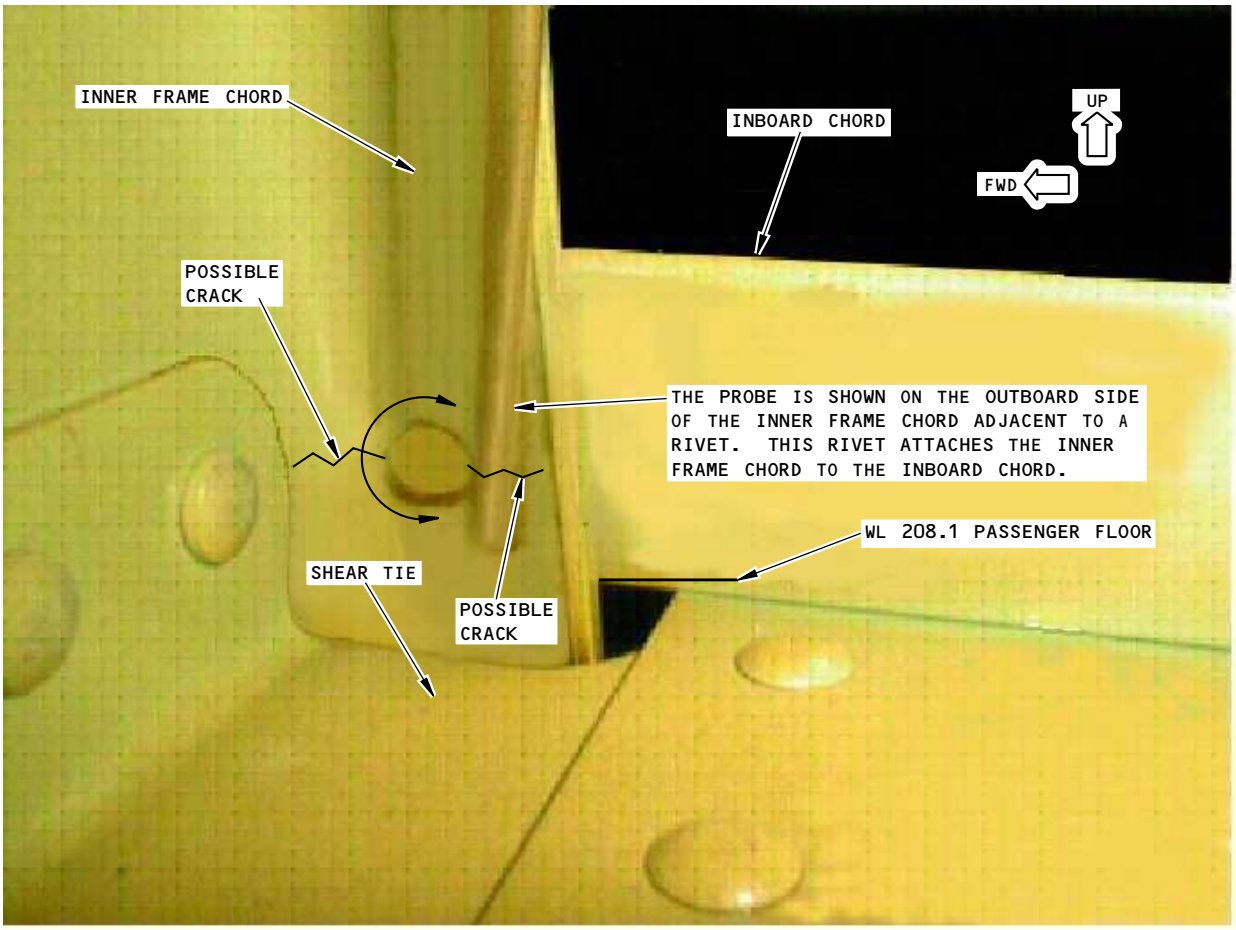

THE INNER FRAME CHORD ON THE LEFT SIDE OF THE AIRPLANE IS SHOWN AS YOU LOOK INBOARD

NOTES:

- THIS VIEW SHOWS THE OUTBOARD SIDE OF THE INNER FRAME CHORD AT STATION 727 IMMEDIATELY ABOVE THE PASSENGER FLOOR. THIS VIEW IS TYPICAL FOR ALL STATIONS FROM STATION 727 TO 1016.
- THE RIVET SHOWN ABOVE THAT IS ADJACENT TO THE EDDY CURRENT PROBE CAN BE EASILY SEEN WITH A MIRROR. DO A SCAN AROUND THIS RIVET AT STATIONS 727 TO 1016 (LEFT AND RIGHT SIDES OF THE AIRPLANE).

2159895 S0000472220_V1

Inner Frame Chord Inspection Areas from BS 727 to 1016
Figure 3

BOEING PROPRIETARY - Copyright © Unpublished Work - See title page for details

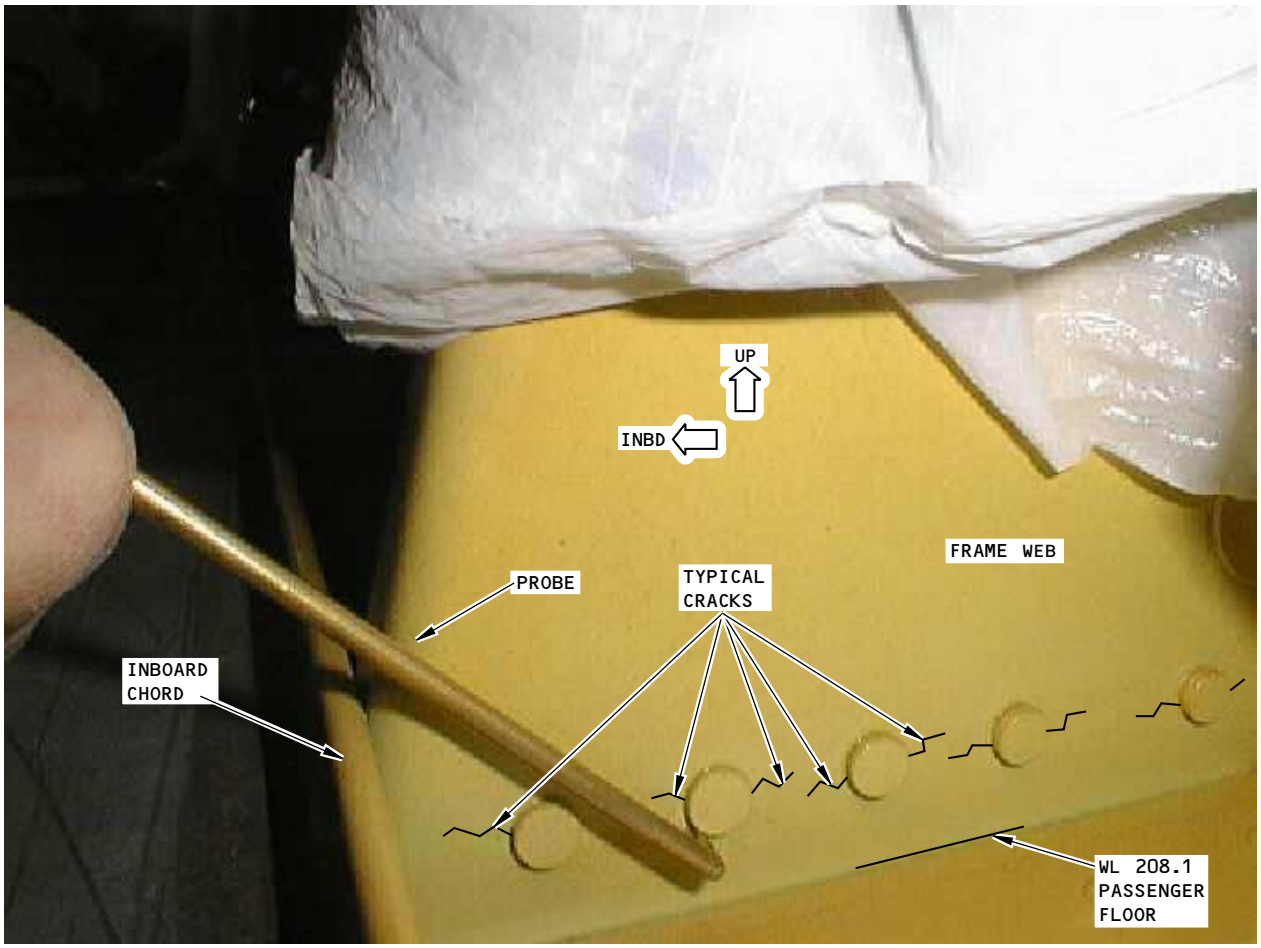

THE FRAME WEB ON THE LEFT SIDE OF THE AIRPLANE IS SHOWN
AS YOU LOOK AFT

NOTES:

- THIS VIEW SHOWS THE FORWARD SIDE OF THE FRAME AT STATION 727 IMMEDIATELY ABOVE THE PASSENGER FLOOR. THIS VIEW IS TYPICAL FOR ALL STATIONS FROM STATION 727 TO 1016.
- DO A SCAN AROUND THE RIVETS SHOWN ON THE FORWARD SIDE OF THE FRAME WEB.

2159896 S0000472221_V1

Frame Web Inspection Areas from BS 727 to 1016
Figure 4

BOEING PROPRIETARY - Copyright © Unpublished Work - See title page for details

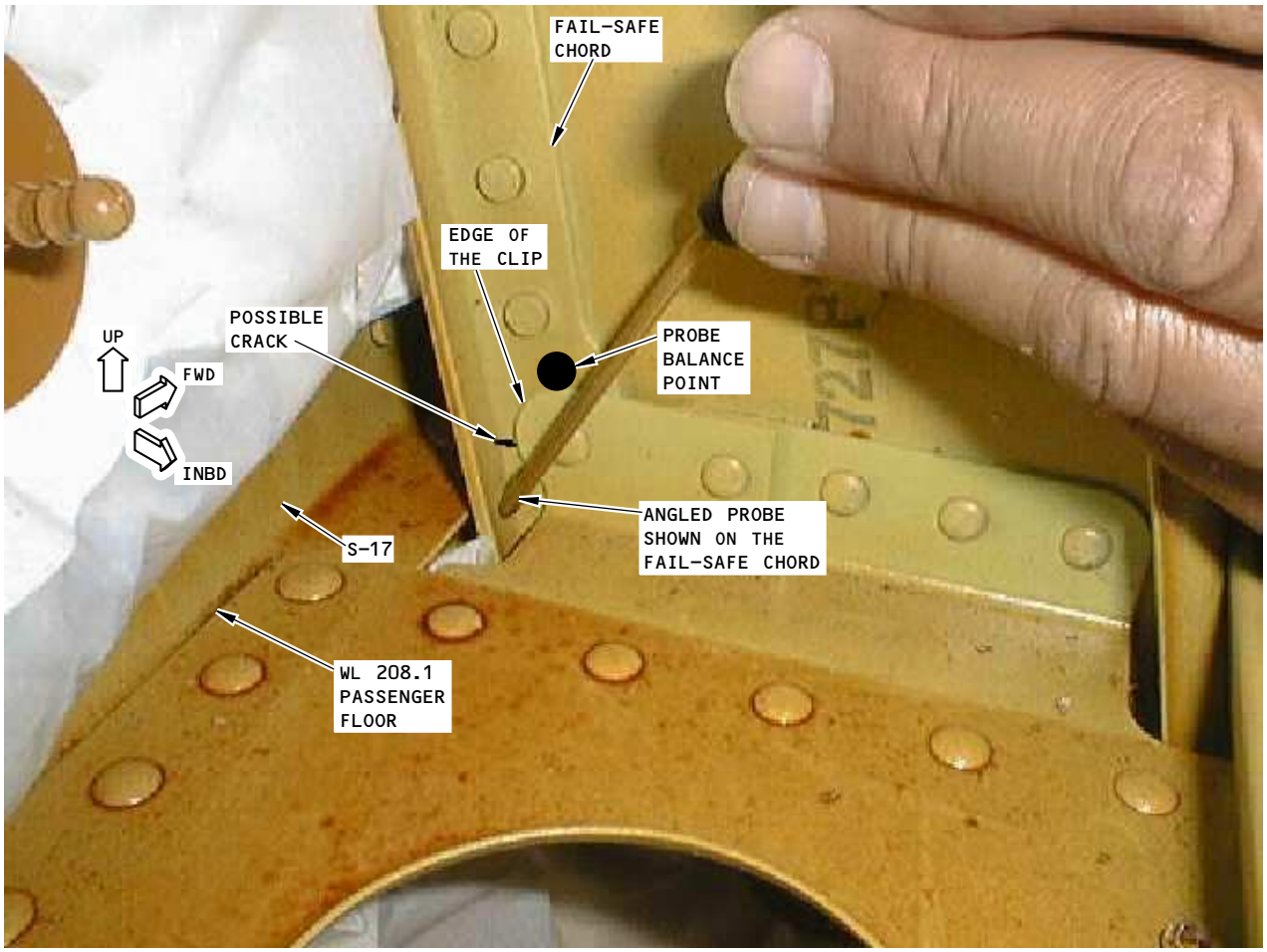

FAIL-SAFE CHORD ON THE LEFT OF THE AIRPLANE IS SHOWN AS YOU LOOK FORWARD

NOTES:

- THIS VIEW SHOWS THE AFT SIDE OF THE FAIL-SAFE CHORD AT STATION 727 IMMEDIATELY ABOVE THE PASSENGER FLOOR. THE VIEW IS TYPICAL FOR ALL STATIONS FROM STATION 727 TO 1016.
- PUT THE PROBE ON THE FAIL-SAFE CHORD WITH THE PROBE AGAINST THE CLIP AS SHOWN. DO A SCAN IN A VERTICAL DIRECTION TO FIND HORIZONTAL CRACKS FROM UNDER THE CLIP. DO THIS SCAN ON THE FAIL-SAFE CHORDS FROM STATION 727 TO 1016 (LEFT AND RIGHT SIDES OF THE AIRPLANE).
- IT COULD BE NECESSARY TO USE A PROBE WITH A SMALLER DIAMETER AT SOME OF THE STATIONS.

2159897 S0000472222_V1

Fail-Safe Chord Inspection Areas from BS 727 to 1016
Figure 5

BOEING PROPRIETARY - Copyright © Unpublished Work - See title page for details

PART 6 - EDDY CURRENT

SUBSURFACE INSPECTION AT THE AFT ENTRY AND AFT GALLEY DOOR CUTOUTS AT STATIONS 951 AND 992.8

1. Purpose

A. Use this subsurface procedure to examine the bear strap and outer chords at the aft entry and aft galley door cutouts. The inspection areas are at the frames at stations 951 and 992.8, from the upper sill to the lower sill.

B. See Figure 1 and Figure 2 for the inspection areas.

C. This procedure uses an impedance plane display instrument.

D. 737 Supplemental Structural Inspection Document (D6-82669) Reference:

(1) Item: F-16A (Aft Galley Door Cutout; Door/Bear Strap inspection in Area A and E, forward of BS 983)

(2) Item: F-16C (Aft Galley Door Cutout; Outer Chord inspection in Area A and E, forward of BS 983)

(3) Item: F-16D (Aft Galley Door Cutout; Door/Bear Strap inspection in Area D, aft of BS 983)

(4) Item: F-17A (Aft Entry Door Cutout; Door/Bear Strap inspection in Area A, forward of BS 983)

(5) Item: F-17C (Aft Entry Door Cutout; Outer Chord inspection in Area A and C, forward of BS 983)

(6) Item: F-17D (Aft Entry Door Cutout; Door/Bear Strap inspection in Area B, aft of BS 983)

NOTE: See Figure 1 and Figure 2 for the Area A, B, C, D, and E locations.

2. Equipment

A. General

(1) Use inspection equipment that can be calibrated on the reference standard as specified in Paragraph 4.

(2) Refer to Part 1, 51-01-00, for data about the equipment manufacturers.

B. Instrument

(1) Use an eddy current instrument that:

(a) Has an impedance plane display.

(b) Operates at a frequency between 300 Hz and 3 kHz.

(2) The instruments that follow were used to help prepare this procedure.

(a) NDT 19, NDT 19e; Nortec/Staveley, Inc.

(b) Phasec 2200; Hocking Krautkramer

(c) MIZ-20A; Zetec, Inc.

C. Probes

(1) Use a probe that:

(a) Operates at frequencies between 300 Hz and 3 kHz.

(b) Has an internal diameter that is between 0.330 and 0.55 inch (8.4 and 14 mm).

(c) Can be calibrated as specified in Paragraph 4.

(2) The probes that follow were used to help prepare this procedure.

BOEING PROPRIETARY - Copyright © Unpublished Work - See title page for details

(a) RR207-2TF; NDT Engineering, Inc.

(b) SPO-3992; Nortec/Staveley

D. Reference Standard

(1) Use reference standard NDT3048 and NDT3048D. See Figure 3 for data about reference standard NDT3048. See Figure 4 for data about reference standard NDT3048D.

3. Prepare for the Inspection

A. Remove loose paint and dirt from the skin in the inspection area. See Figure 1 and Figure 2 for the fasteners in the inspection area on the skin at stations 951 and 992.8 on the left and right sides of the airplane.

B. If the fasteners cannot be seen through the paint, remove some paint until the fasteners can be seen.

C. See Figure 1 and Figure 2 and make marks on the fasteners to identify the reference standard (NDT3048A, NDT3048B, NDT3048C, and NDT3048D) to use during the calibration. Figure 1 and Figure 2 show fastener codes (A, B, C, and D) that identify the reference standard to use during calibration.

4. Instrument Calibration

A. See Figure 1 and Figure 2 to identify the correct reference standard (NDT3048A, NDT3048B, NDT3048C, and NDT3048D) to use for the inspection area shown.

B. Set the frequency as follows:

(1) Set the frequency between 800 and 900 Hz when NDT3048A is used.

(2) Set the frequency between 2.0 and 3.0 kHz when NDT3048B is used.

(3) Set the frequency between 700 and 800 Hz when NDT3048C is used.

(4) Set the frequency between 300 and 400 Hz when NDT3048D is used.

C. Set the low pass filter to 10 Hz or less.

D. Set the high pass filter to zero or off.

E. Put the probe on the reference standard as follows:

(1) Put the probe at position 1 when NDT3048A is used. See Figure 5.

(2) Put the probe at position 3 when NDT3048B is used. See Figure 5.

(3) Put the probe at position 5 when NDT3048C is used. See Figure 5.

(4) Put the probe at position 7 when NDT3048D is used. See Figure 5.

(5) Make sure the fastener is in the center of the probe. The fastener is in the center of the probe when the signal from the fastener hole without a notch is at a minimum height and the lift-off signal is at a minimum (near the balance point).

F. Balance the instrument.

G. Adjust the balance point to 20 percent of the vertical display and 50 percent of the horizontal display as shown in Figure 5.

H. Adjust the phase control so that the lift-off signal moves horizontally to the left when the probe is lifted off of the reference standard.

I. Move the probe on the reference standard as follows:

BOEING PROPRIETARY - Copyright © Unpublished Work - See title page for details

(1) Move the probe to probe position 2 when NDT3048A is used. See Figure 5.

(2) Move the probe to probe position 4 when NDT3048B is used. See Figure 5.

(3) Move the probe to probe position 6 when NDT3048C is used. See Figure 5.

(4) Move the probe to probe position 8 when NDT3048D is used. See Figure 5.

(5) Make sure the probe is centered on the fasteners.

NOTE: These are the holes with the notches.

J. Adjust the gain to get a notch signal that is 80 percent of full screen height as shown in Figure 5. Adjust the gain so that the vertical gain is 6 to 10 dB higher than the horizontal gain.

NOTE: If the signal on the display has noise, lower the frequency of the low pass filter some more.

5. Inspection Procedure

A. Put the probe on one of the fasteners in the Figure 1 or Figure 2 inspection area. Make sure the calibration was done on the correct reference standard (NDT3048A, NDT3048B, NDT3048C, or NDT3048D) for the fasteners to be examined. See Figure 1 or Figure 2 for the fastener codes (A, B, C, or D) in the inspection area.

B. Balance the instrument.

C. Adjust the probe on this fastener to get the minimum (lowest level) signal. This adjustment for the minimum signal will make sure the fastener is in the center of the probe.

D. Balance the instrument.

E. Move the probe to a different fastener that has the same fastener code in the inspection area. Examine this area for cracks as follows:

(1) Adjust the probe on this fastener to get the minimum (lowest level) signal. Monitor the instrument display at the same time.

(2) Make a mark at the locations that cause signals to occur that are 50 percent (or more) of full screen height (30 percent (or more) higher than the balance position). See Figure 5.

F. Do Paragraph 5.E. for the remaining fasteners that have the same fastener codes in the inspection area. Make sure the correct fasteners are examined at stations 951 and 992.8 on each side of the airplane. See Figure 1 and Figure 2 for these fastener codes.

G. Do Paragraph 5.A. thru Paragraph 5.F. on the remaining fasteners with the other codes (A, B, C, or D) after the calibration is done on the correct reference standard. See Figure 1 and Figure 2 for these fastener codes.

6. Inspection Results

A. Signals that are 50 percent (or more) of full screen height are possible cracks. See Figure 5 for the reject level on the display.

B. Compare the signal that occurs during the inspection to the signal that you got during calibration from the notch in the reference standard. Make sure that you compare the signal from the fastener to the signal from the notch in the reference standard that agrees with the fastener code (NDT3048A, NDT3048B, NDT30458C, or NDT3048D).

C. To examine the area that gives a crack signal some more, remove the internal panels and insulation to visually examine the bear strap and outer chord while in the airplane. If you do not see a crack, do the steps that follow:

BOEING PROPRIETARY - Copyright © Unpublished Work - See title page for details

(1) If the chord adjacent to the fastener that gave the crack indication can be seen, then do a surface eddy current inspection around that fastener. Refer to Part 6, 51-00-00, Procedure 23.

(2) If the chord cannot be seen or if a crack indication is not found during the Paragraph 6.C.(1) inspection, remove the fastener and do a fastener hole inspection with a rotary scanner as specified in Part 6, 51-00-00, Procedure 16.

BOEING PROPRIETARY - Copyright © Unpublished Work - See title page for details

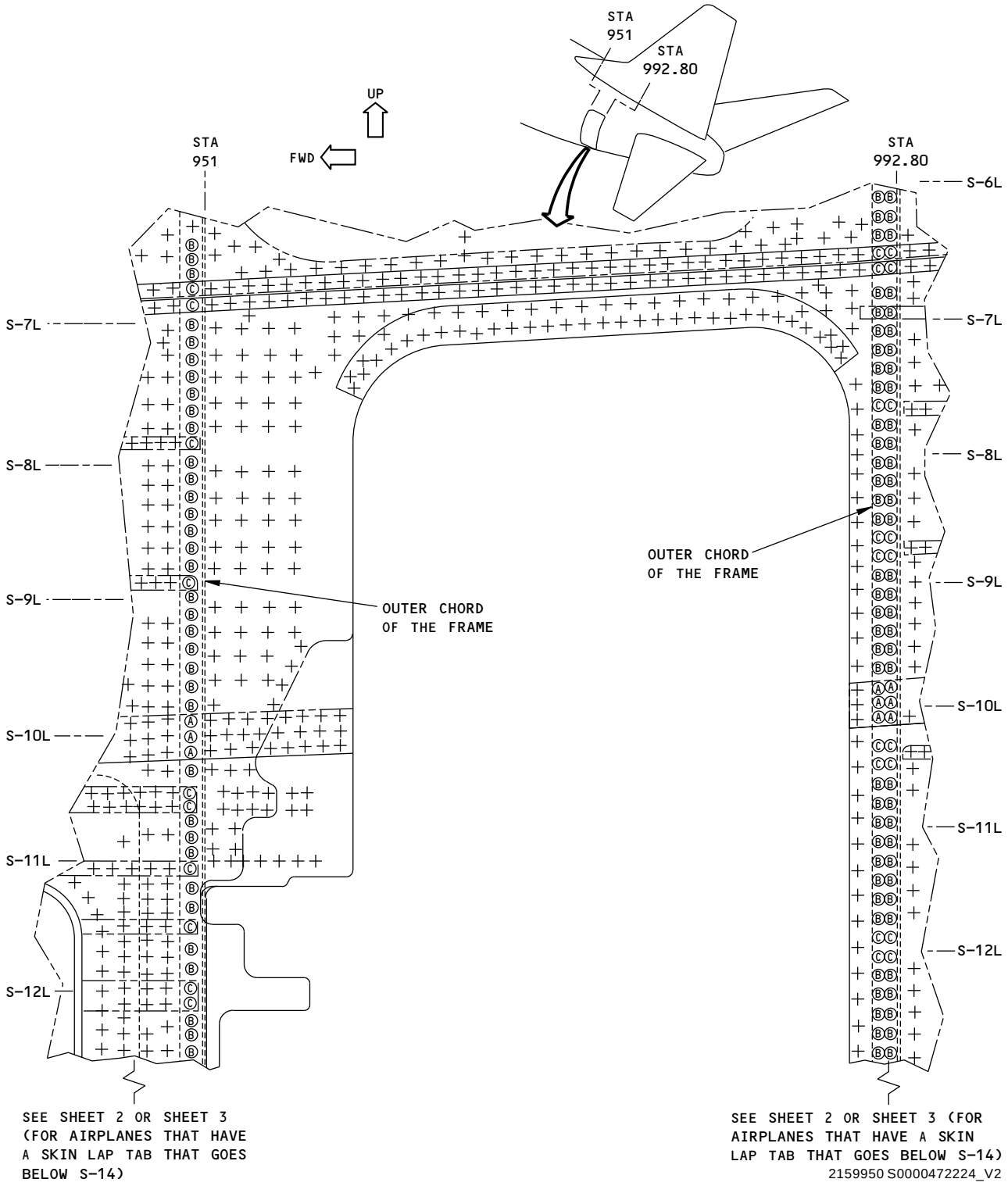

Inspection Areas at the Aft Entry Door Cutouot
Figure 1 (Sheet 1 of 4)

BOEING PROPRIETARY - Copyright © Unpublished Work - See title page for details

CALIBRATION TABLE		
FASTENER CODE	REFERENCE STANDARD	INSTRUMENT FREQUENCY
Ⓐ	NDT3048A	800 TO 900 Hz
Ⓑ	NDT3048B	2.0 TO 3.0 kHz
Ⓒ	NDT3048C	700 TO 800 Hz

EXAMINE THE FASTENERS ON THE OUTER CHORD WITH A RING PROBE. MAKE SURE THE CALIBRATION AGREES WITH THE FASTENER CODES SHOWN ON THE OUTER CHORDS OF THE FRAMES. SEE THE CALIBRATION TABLE ABOVE AND PARAGRAPH 4.

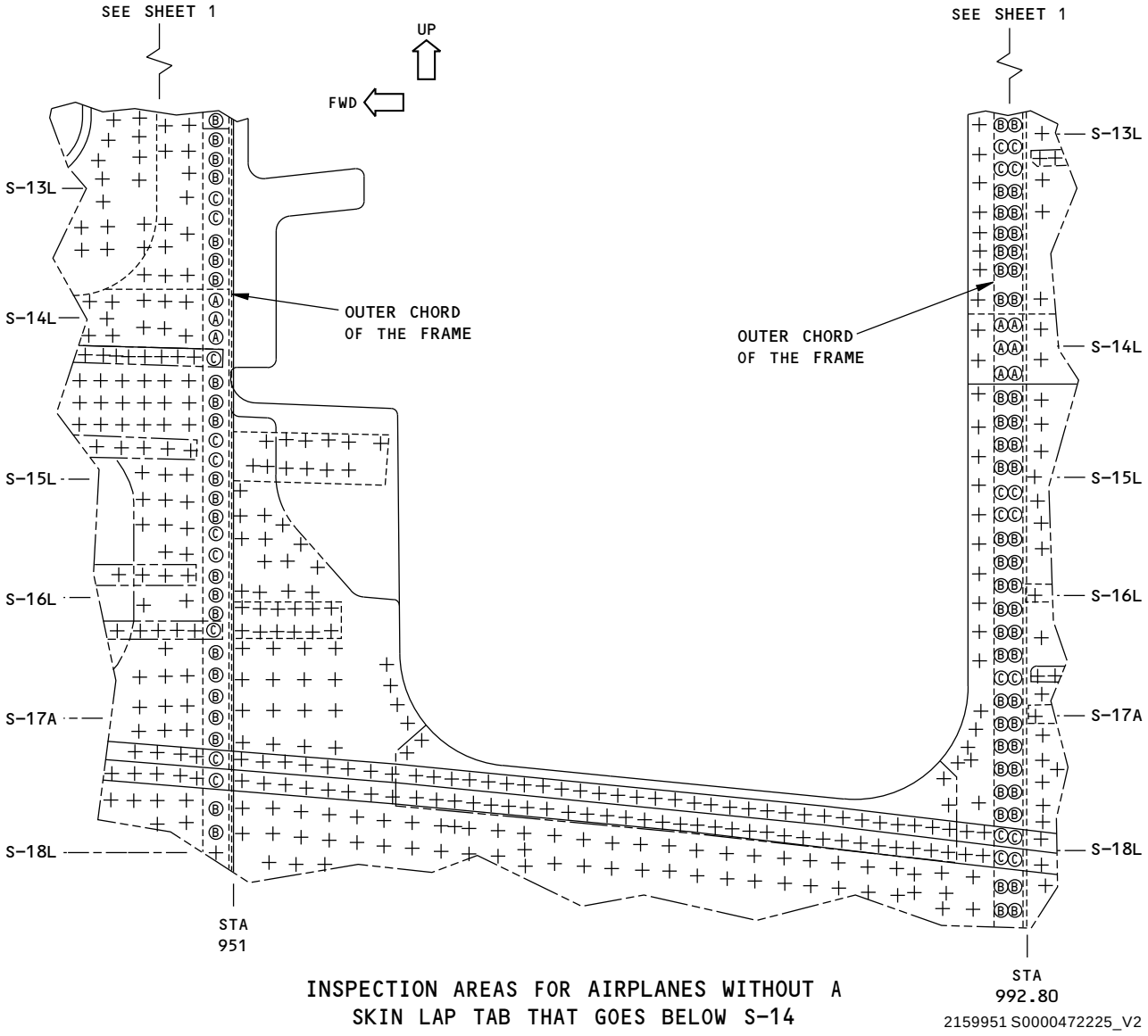

Inspection Areas at the Aft Entry Door Cutouot
Figure 1 (Sheet 2 of 4)

BOEING PROPRIETARY - Copyright © Unpublished Work - See title page for details

CALIBRATION TABLE				
FASTENER CODE	REFERENCE STANDARD	INSTRUMENT FREQUENCY	DTR ITEM	STRUCTURE EXAMINED
Ⓐ	NDT3048A	800 TO 900 Hz	F-17A	DOOR/BEAR STRAP
Ⓑ	NDT3048B	2.0 TO 3.0 kHz	F-17C	OUTER FRAME CHORD
Ⓒ	NDT3048C	700 TO 800 Hz	F-17D	DOOR/BEAR STRAP
Ⓓ	NDT3048D	300 TO 400 Hz	F-17C	OUTER FRAME CHORD

EXAMINE THE FASTENERS ON THE OUTER CHORD WITH A RING PROBE. MAKE SURE THE CALIBRATION AGREES WITH THE FASTENER CODES SHOWN ON THE OUTER CHORDS OF THE FRAMES. SEE THE CALIBRATION TABLE ABOVE AND PARAGRAPH 4.

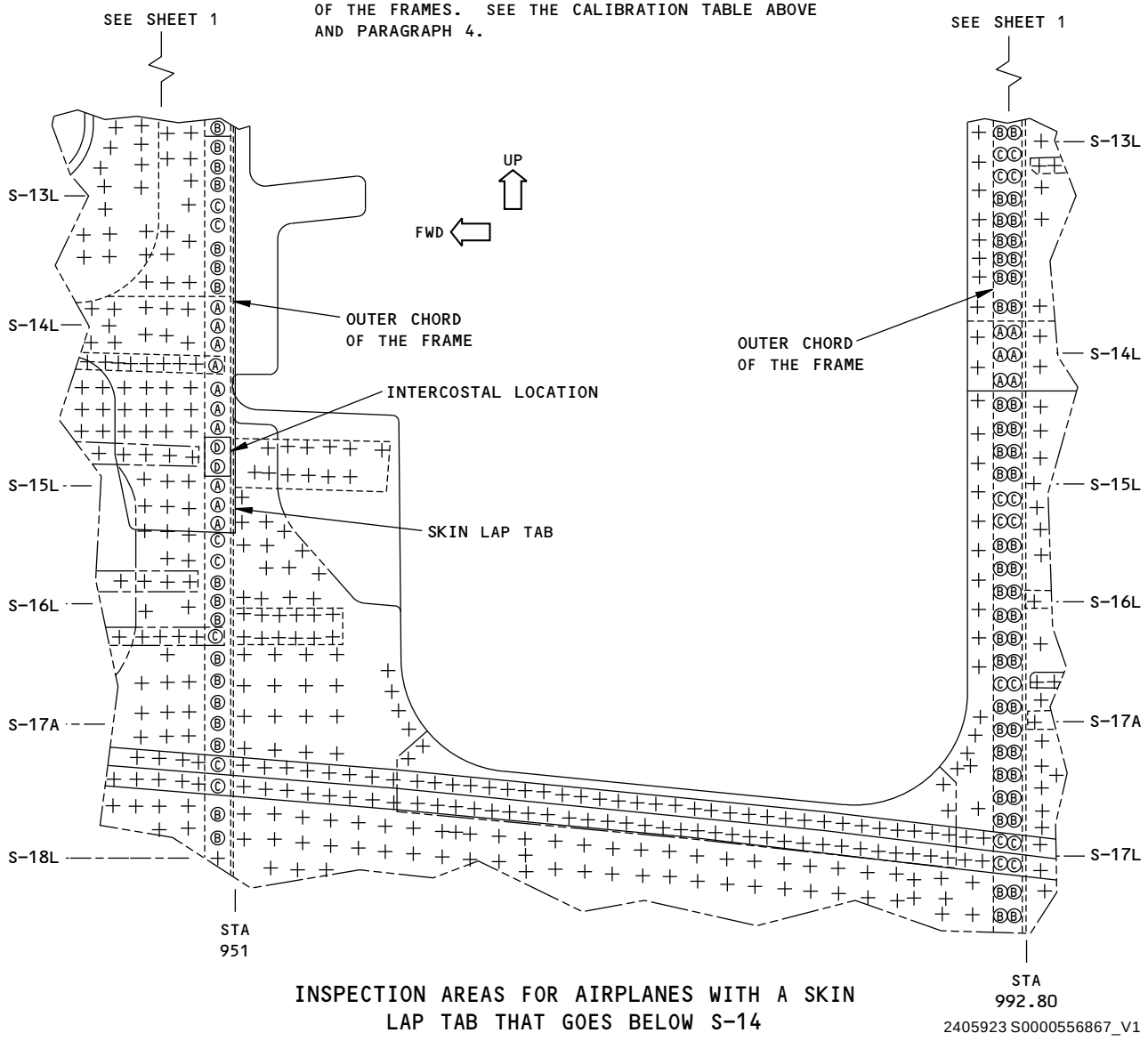

INSPECTION AREAS FOR AIRPLANES WITH A SKIN LAP TAB THAT GOES BELOW S-14

2405923 S0000556867_V1

Inspection Areas at the Aft Entry Door Cutouot
Figure 1 (Sheet 3 of 4)

BOEING PROPRIETARY - Copyright © Unpublished Work - See title page for details

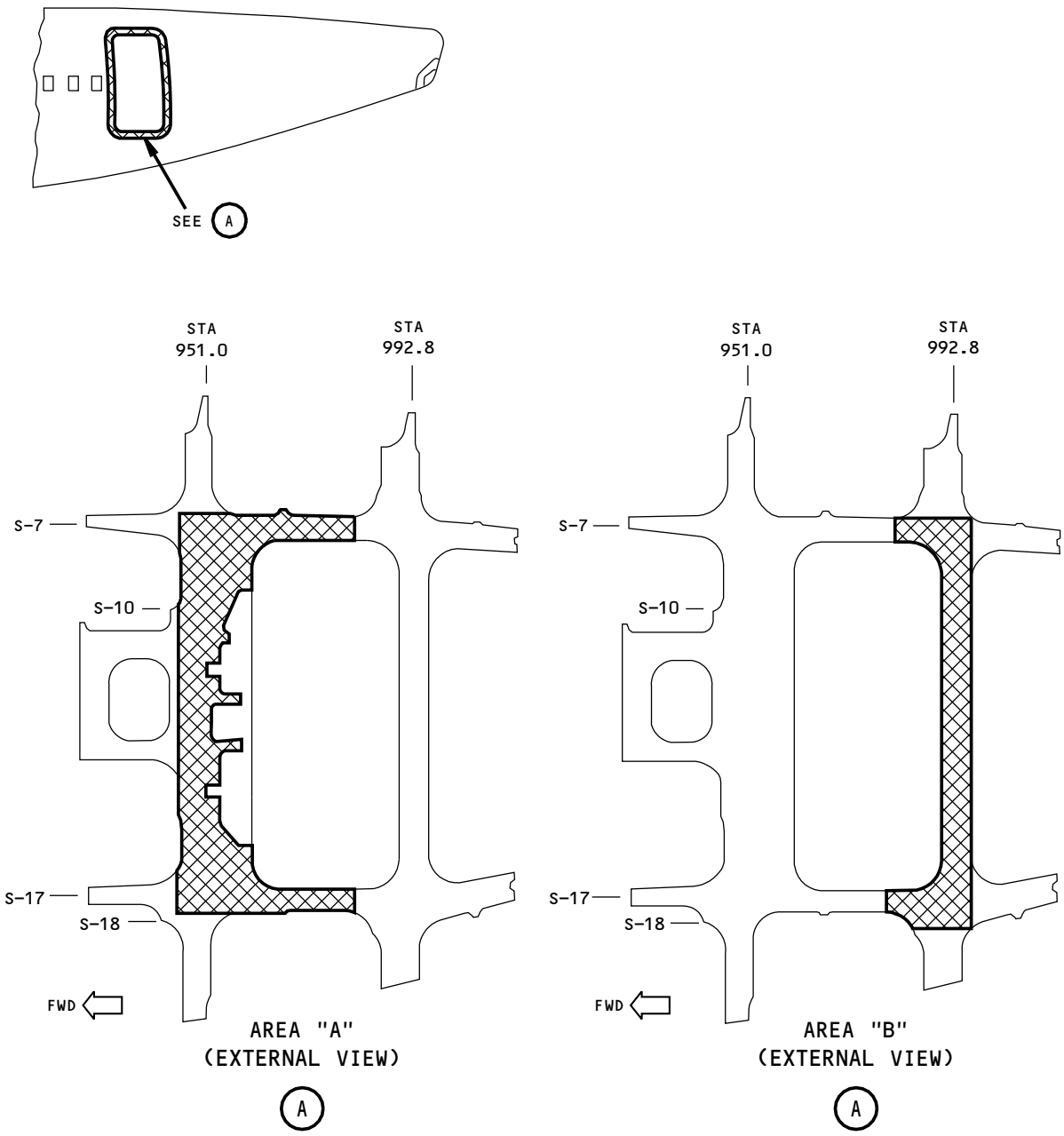

SSID AREA LOCATIONS FOR THE AFT ENTRY DOOR CUTOUT

SSID AREAS 100 AND 200

2405930 S0000556870_V1

Inspection Areas at the Aft Entry Door Cutouot
Figure 1 (Sheet 4 of 4)

BOEING PROPRIETARY - Copyright © Unpublished Work - See title page for details

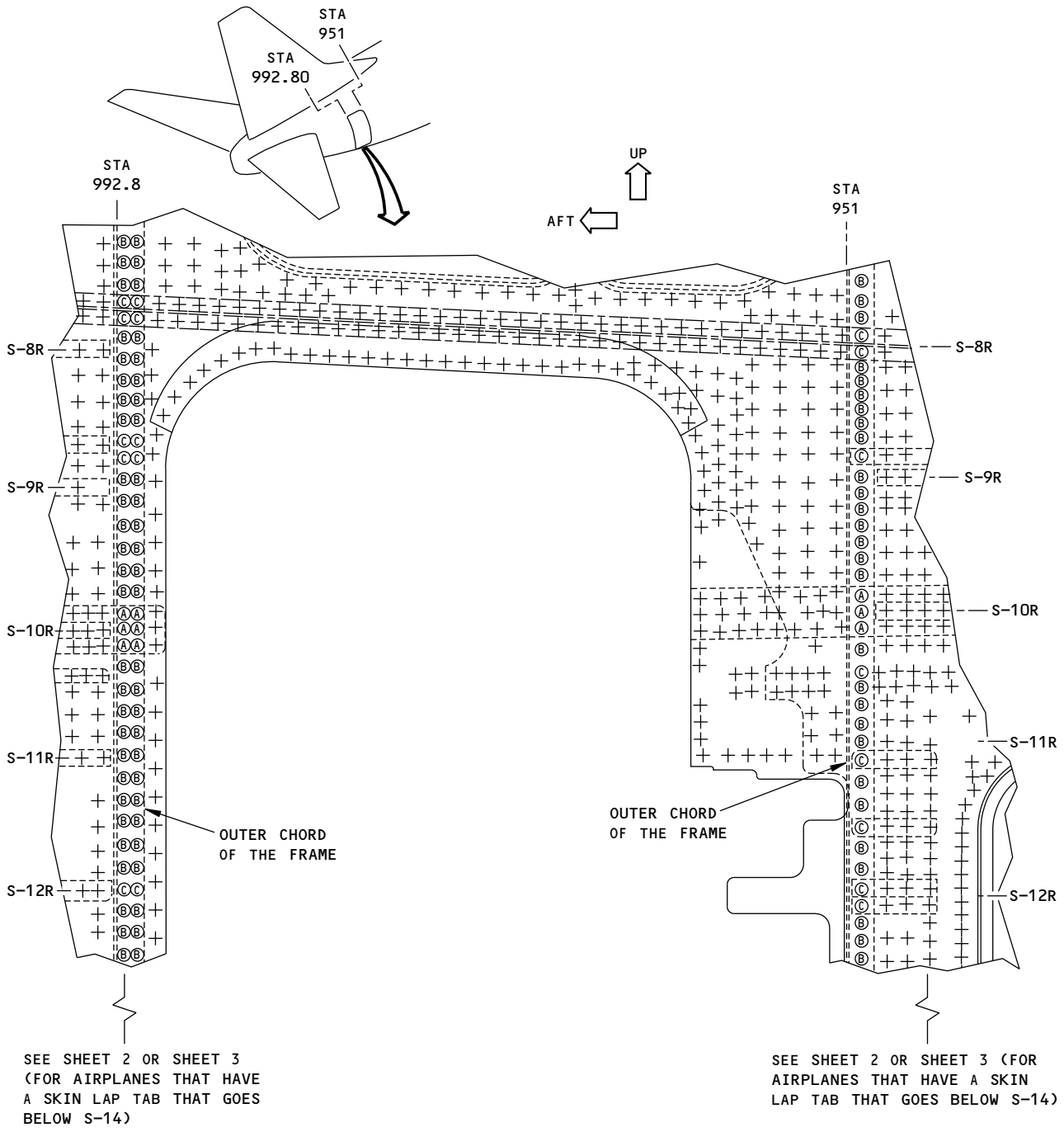

2159954 S0000472226_V2

Inspection Areas at the Aft Galley Door Cutout
Figure 2 (Sheet 1 of 4)

BOEING PROPRIETARY - Copyright © Unpublished Work - See title page for details

CALIBRATION TABLE		
FASTENER CODE	REFERENCE STANDARD	INSTRUMENT FREQUENCY
Ⓐ	NDT3048A	800 TO 900 Hz
Ⓑ	NDT3048B	2.0 TO 3.0 kHz
Ⓒ	NDT3048C	700 TO 800 Hz

EXAMINE THE FASTENERS ON THE OUTER CHORD WITH A RING PROBE. MAKE SURE THE CALIBRATION AGREES WITH THE FASTENER CODES SHOWN ON THE OUTER CHORDS OF THE FRAMES. SEE THE CALIBRATION TABLE ABOVE AND PARAGRAPH 4.

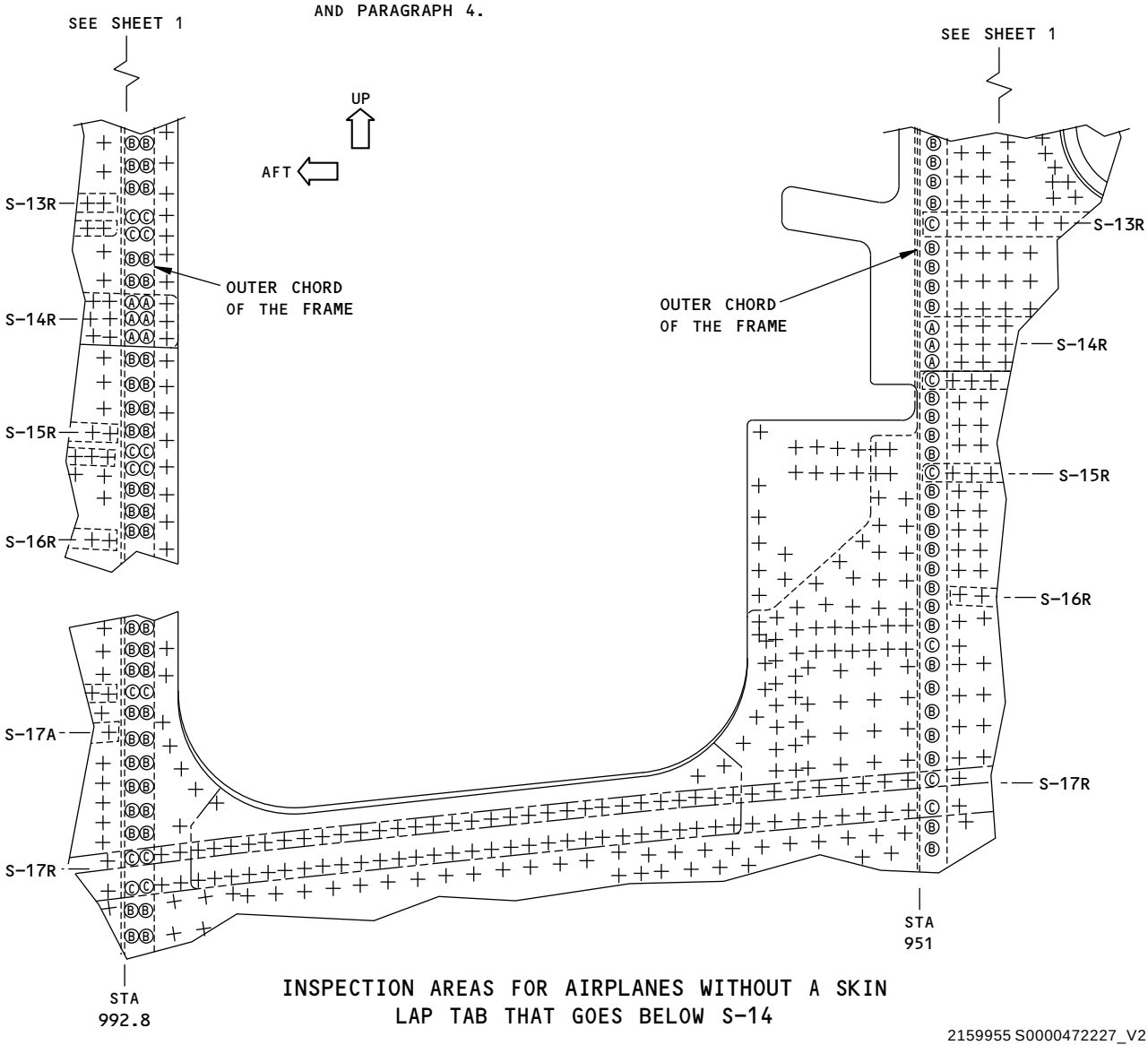

2159955 S0000472227_V2

Inspection Areas at the Aft Galley Door Cutout
Figure 2 (Sheet 2 of 4)

BOEING PROPRIETARY - Copyright © Unpublished Work - See title page for details

CALIBRATION TABLE				
FASTENER CODE	REFERENCE STANDARD	INSTRUMENT FREQUENCY	DTR ITEM	STRUCTURE EXAMINED
Ⓐ	NDT3048A	800 TO 900 Hz	F-16A	DOOR/BEAR STRAP
Ⓑ	NDT3048B	2.0 TO 3.0 kHz	F-16C	OUTER FRAME CHORD
Ⓒ	NDT3048C	700 TO 800 Hz	F-16D	DOOR/BEAR STRAP
Ⓓ	NDT3048D	300 TO 400 Hz	F-16C	OUTER FRAME CHORD

EXAMINE THE FASTENERS ON THE OUTER CHORD WITH A RING PROBE. MAKE SURE THE CALIBRATION AGREES WITH THE FASTENER CODES SHOWN ON THE OUTER CHORDS OF THE FRAMES. SEE THE CALIBRATION TABLE ABOVE AND PARAGRAPH 4.

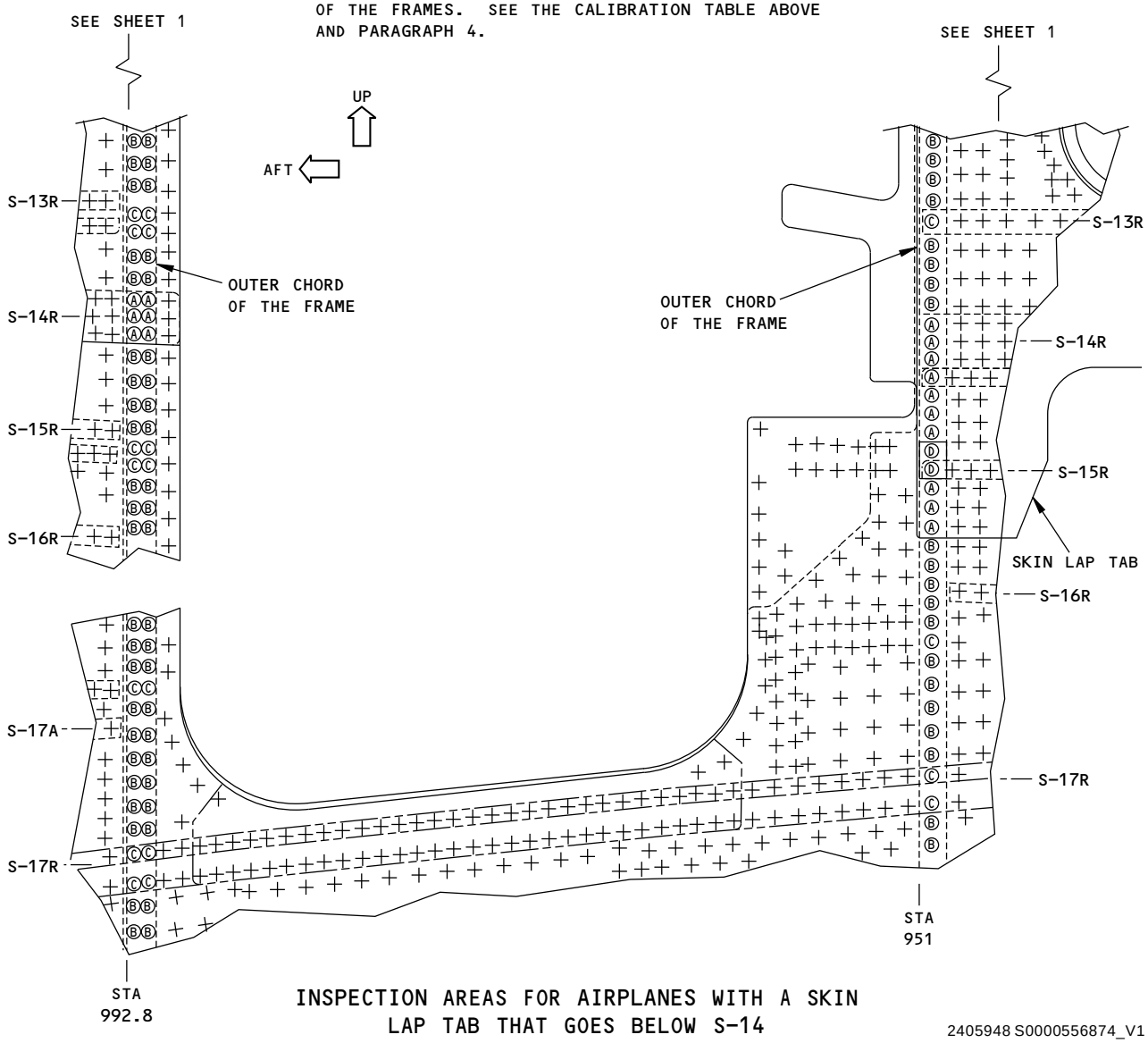

INSPECTION AREAS FOR AIRPLANES WITH A SKIN LAP TAB THAT GOES BELOW S-14

2405948 S0000556874_V1

Inspection Areas at the Aft Galley Door Cutout
Figure 2 (Sheet 3 of 4)

BOEING PROPRIETARY - Copyright © Unpublished Work - See title page for details

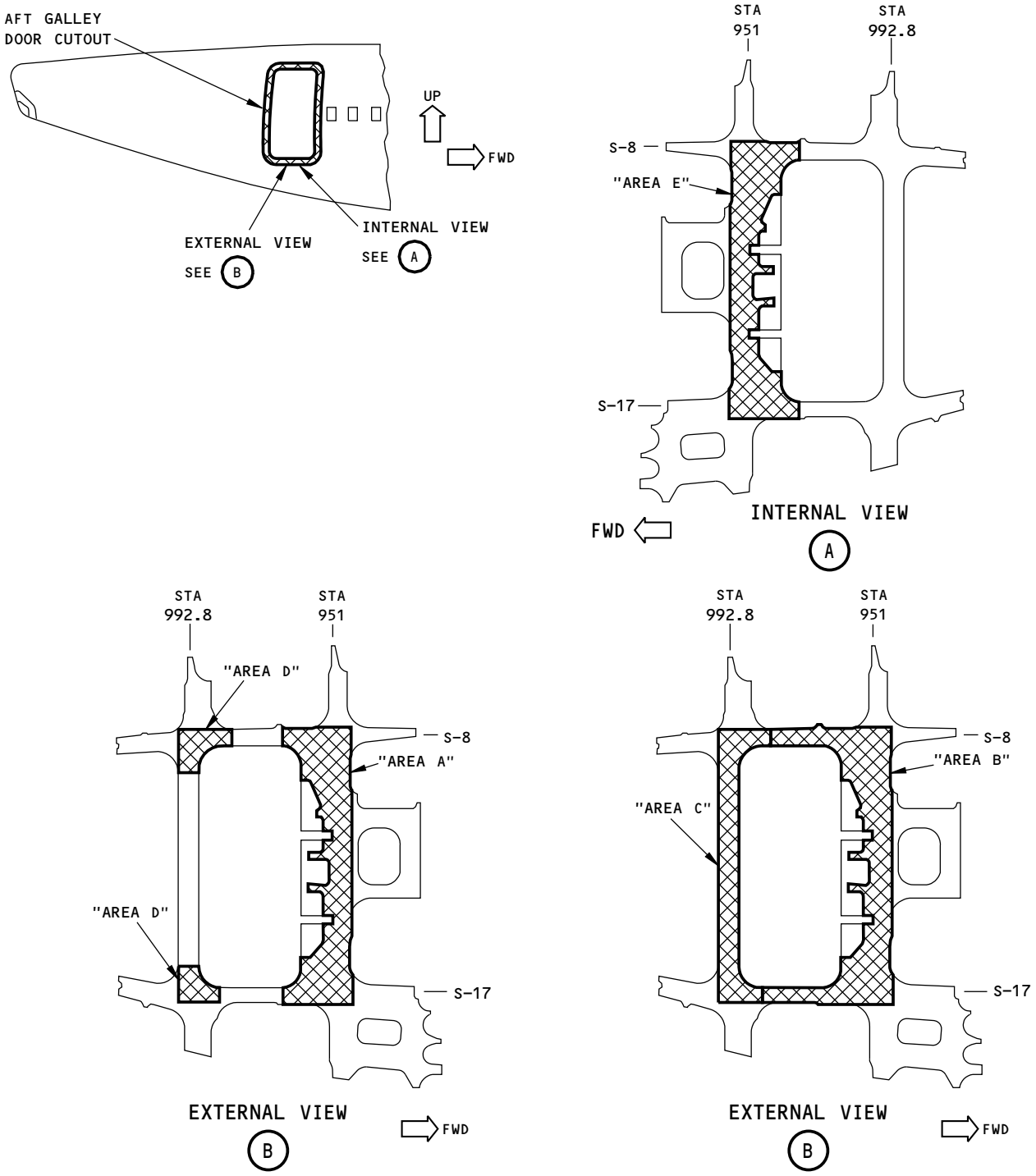

Inspection Areas at the Aft Galley Door Cutout
Figure 2 (Sheet 4 of 4)

BOEING PROPRIETARY - Copyright © Unpublished Work - See title page for details

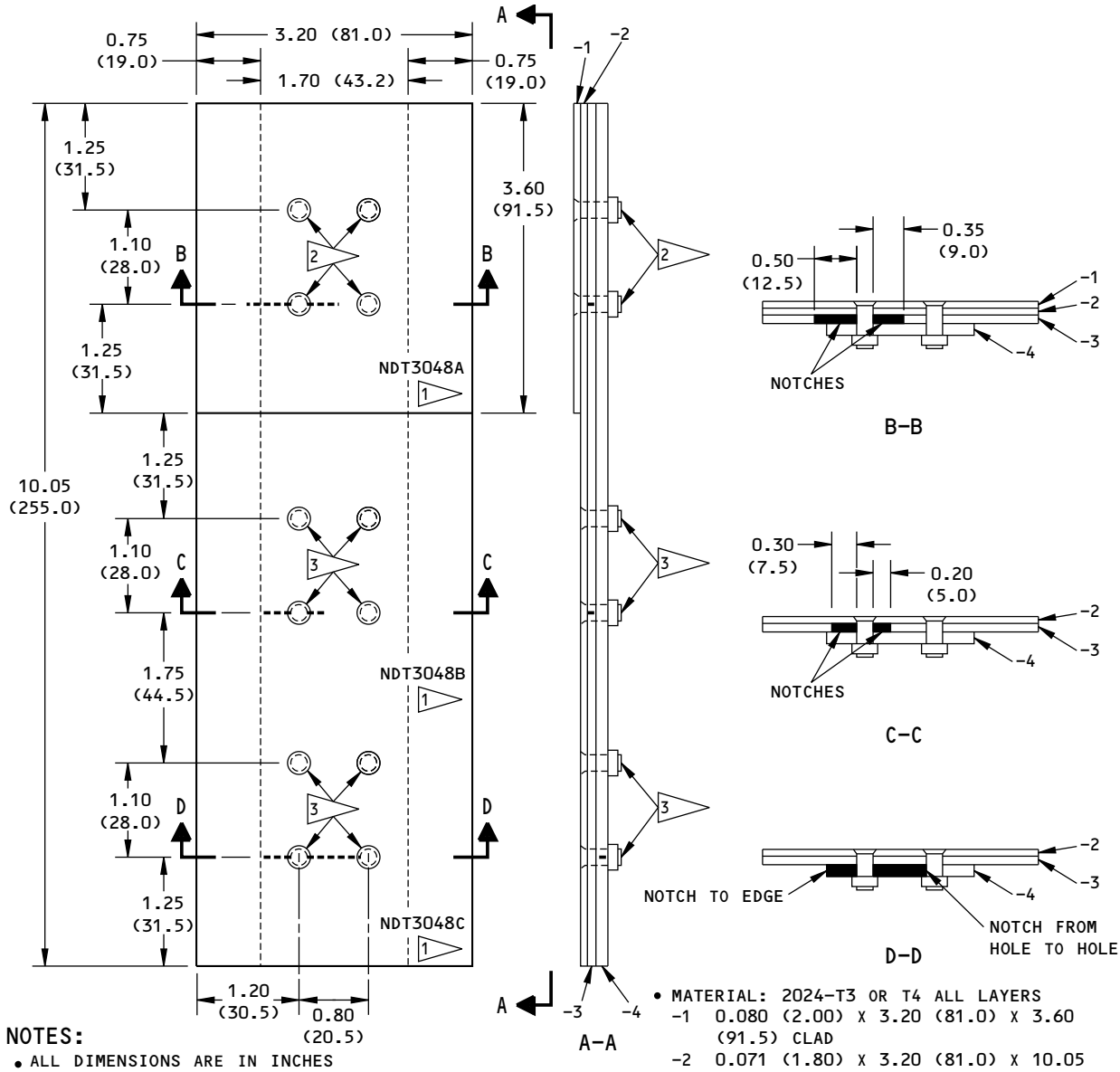

NOTES:

- ALL DIMENSIONS ARE IN INCHES (MILLIMETERS ARE IN PARENTHESES)
- TOLERANCE (UNLESS SPECIFIED DIFFERENTLY):

INCHES	MILLIMETERS
X.XXX = ±0.005	X.XX = ±0.10
X.XX = ±0.025	X.X = ±0.5
X.X = ±0.050	X = ±1

- SURFACE ROUGHNESS: 125 Ra OR BETTER

1 ETCH OR STEEL STAMP THE REFERENCE STANDARD NUMBERS, NDT3048A, NDT3048B AND NDT3048C, AT THE LOCATIONS SHOWN

2 BACB30NW6K7 BOLTS WITH BACC30M6 COLLARS (4 LOCATIONS)

- MATERIAL: 2024-T3 OR T4 ALL LAYERS
  - -1 0.080 (2.00) X 3.20 (81.0) X 3.60 (91.5) CLAD
  - -2 0.071 (1.80) X 3.20 (81.0) X 10.05 (255.0) CLAD
  - -3 0.100 (2.55) X 3.20 (81.0) X 10.05 (255.0) CLAD OR BARE
  - -4 0.140 (3.55) X 1.70 (43.2) X 10.05 (255.0) CLAD OR BARE
- EDM NOTCH OR JEWELER'S SAWCUT:
  - LENGTH: AS SHOWN ABOVE
  - DEPTH: THROUGH THE PART
  - WIDTH: 0.02 (0.50) MAXIMUM

3 BACB30NW6K5 BOLTS WITH BACC30M6 COLLARS (BACB30GY6A WITH BACC30K6 CAN BE USED AS AN ALTERNATIVE) (8 LOCATIONS)

2159956 S0000472228_V2

Reference Standard NDT3048
Figure 3

BOEING PROPRIETARY - Copyright © Unpublished Work - See title page for details

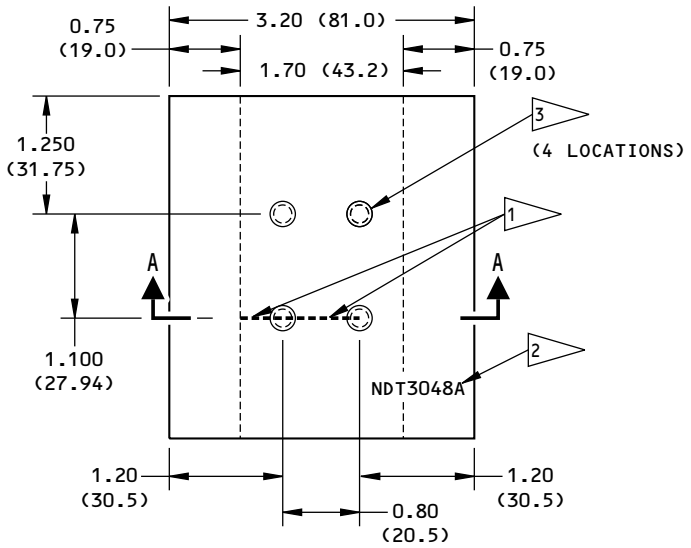

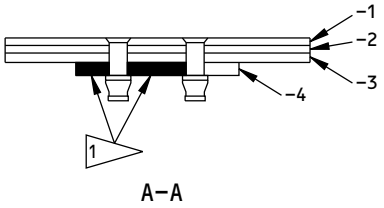

NOTES:

- ALL DIMENSIONS ARE IN INCHES (MILLIMETERS ARE IN PARENTHESES)
- TOLERANCE (UNLESS SPECIFIED DIFFERENTLY):

INCHES	MILLIMETERS
X.XXX = ±0.005	X.XX = ±0.10
X.XX = ±0.025	X.X = ±0.5
X.X = ±0.050	X = ±1

- SURFACE ROUGHNESS: 125 Ra OR BETTER

1 ETCH THROUGH NOTCH: HOLE-TO-HOLE AND HOLE-TO-EDGE, 0.020 (0.50) MAXIMUM WIDTH

2 ETCH OR ENGRAVE THE REFERENCE STANDARD NUMBER, NDT3048D, AT APPROXIMATELY THIS LOCATION

3 INSTALL BACB30NW6K7 FASTENERS WITH BACC30M6 COLLARS (BACB30GY7 FASTENERS AND BACC30K6 COLLARS CAN BE USED AS AN ALTERNATIVE)

- MATERIAL: 2024-T3 OR T4 (ALL LAYERS)
  - -1 0.080 (2.00) X 3.20 (81.0) X 3.60 (91.5) CLAD
  - -2 0.071 (1.80) X 3.20 (81.0) X 3.60 (91.5) CLAD
  - -3 0.100 (2.55) X 3.20 (81.0) X 3.60 (91.5) CLAD OR BARE
  - -4 0.140 (3.55) X 1.70 (43.2) X 3.60 (91.5) CLAD OR BARE

2406033 S0000556876_V1

Reference Standard NDT3048D
Figure 4

BOEING PROPRIETARY - Copyright © Unpublished Work - See title page for details

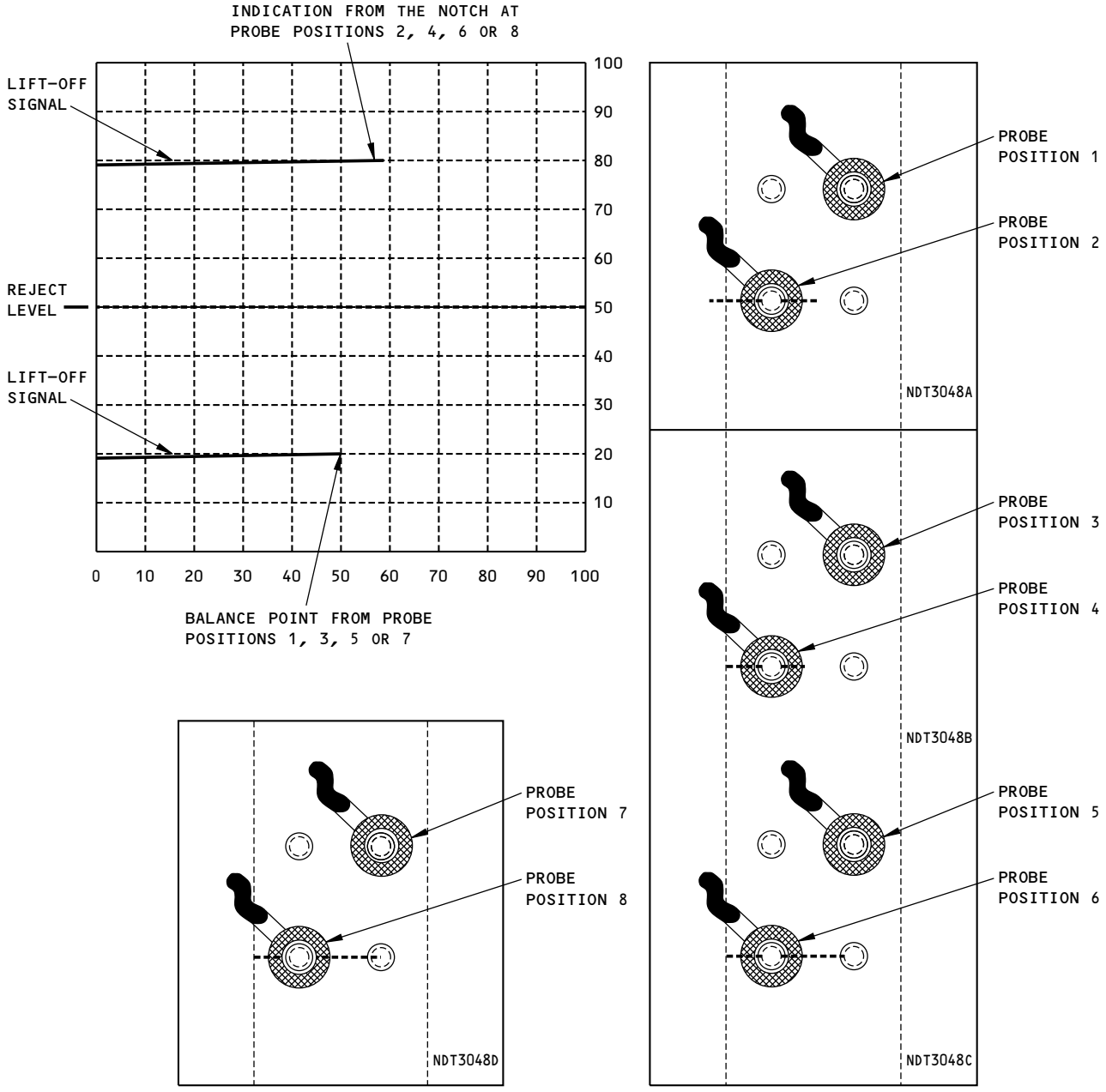

NOTES:

- SEE FIGURE 1 OR 2, AS APPLICABLE, TO IDENTIFY THE REFERENCE STANDARD TO USE DURING CALIBRATION (NDT3048A, NDT3048B, NDT3048C OR NDT3048D)

2159959 S0000472229_V2

Probe Positions and Instrument Display for Calibration
Figure 5

BOEING PROPRIETARY - Copyright © Unpublished Work - See title page for details

PART 6 - EDDY CURRENT

AFT GALLEY AND ENTRY DOOR CUTOUTS

1. **Purpose**

   A. Use this procedure to examine the inner and outer chords of the frame, the inner chord of the sill, and the reinforcement strap (bear strap) at the cutouts for the aft entry and aft galley doors. The inspection areas are at station 951 and 992.8 on the left and right sides of the airplane. See Figure 1 for the inspection areas.

   B. This procedure uses an impedance plane display instrument or a meter display instrument to find surface cracks. Refer to Part 6, 51-00-00, Procedure 4, or Part 6, 51-00-00, Procedure 23.

   C. 737 Supplemental Structural Inspection Document (D6-82669) Reference:

      (1) Item: F-16A

      (2) Item: F-16B

      (3) Item: F-16C

      (4) Item: F-16E

      (5) Item: F-17B

      (6) Item: F-17C

2. **Equipment**

   A. General

      (1) Use inspection equipment that can be calibrated on the reference standard as specified in Paragraph 4.

      (2) Refer to Part 1, 51-01-00, for data about the equipment manufacturers.

   B. Instrument

      (1) Use an eddy current instrument that:

         (a) Has an impedance plane display or a meter display.

         (b) Operates at a frequency between 200 kHz and 300 kHz.

      (2) The instruments that follow were used to help prepare this procedure.

         (a) Phasec 1.1; Hocking Krautkramer

         (b) NDT 19e; Staveley Instruments

         (c) Locator UHB; Hocking Inc.

   C. Probes

      (1) One straight, flexible probe that is a minimum of 9.0 inches (229 mm) long (total length) is necessary to use if a close-out plate is installed at station 951. If the airplane to be examined does not have this optional close-out plate, then this long flexible probe is not necessary. Use an eddy current probe that:

         (a) Operates at a frequency between 200 kHz and 300 kHz.

         (b) Has a maximum external diameter of 0.13 inch (3.3 mm).

         (c) Has a minimum total length of 9.0 inches (229 mm).

         (d) Is shielded.

BOEING PROPRIETARY - Copyright © Unpublished Work - See title page for details

(e) Operates as specified in Part 6, 51-00-00, Procedure 4, or Part 6, 51-00-00, Procedure 23.

(2) One angled probe is also necessary. Use an eddy current probe that:

(a) Operates at a frequency between 200 kHz and 500 kHz.

(b) Is shielded.

(c) Operates as specified in Part 6, 51-00-00, Procedure 4, or Part 6, 51-00-00, Procedure 23.

(d) Has a minimum drop of 0.25 inch (6.4 mm).

(3) The probes that follow were used to help prepare this procedure.

(a) MTF-90FX; NDT Engineering. This flexible, straight probe is necessary only if there is a close-out plate installed at station 951 on the airplane to be examined.

(b) MTF903-50B (angled probe); NDT Engineering.

D. Reference Standards

(1) Use reference standard 188A or 126 to do the calibration for this inspection. Refer to Part 6, 51-00-00, Procedure 4, or Part 6, 51-00-00, Procedure 23 to make these reference standards.

3. Prepare for the Inspection

A. Remove the interior panels and insulation to get access to the inspection areas at the frames shown in Figure 1.

B. Remove the floor panels to get access at the inspection area of the frames immediately below the floor shown in Figure 1. Optional access to the inspection area on the frames is in the cargo area.

C. Make sure the inspection areas are clean on the inner and outer chords of the frames and on the reinforcement strap. Make sure the inspection areas on the left and right sides of the airplane are clean. See Figure 1.

4. Instrument Calibration

A. Set the instrument at a frequency between 200 and 300 kHz.

B. Calibrate the instrument as specified in Part 6, 51-00-00, Procedure 4, or Part 6, 51-00-00, Procedure 23. Do the calibration on reference standard 188A or 126 for all of the inspection areas.

5. Inspection Procedure

A. Examine the inner and outer chords of the frame, the inner chord of the sill, and the reinforcement strap (bear strap) at the cutouts for the aft entry and aft galley doors as follows:

(1) Refer to Part 6, 51-00-00, Procedure 4, or Part 6, 51-00-00, Procedure 23, par. 6 for the inspection procedure.

(2) See Figure 1 for the inspection areas and more data on the scan direction.

(3) See View A in Figure 1 for more data on the inspection area if a close-out plate is installed between stringers 10 and 14 at station 951. Use a flexible probe that is equivalent to the probe specified in Paragraph 2.C. Bend the probe so it can go through the access holes in the close-out plate to do a vertical scan of the outer chord and reinforcing strap (bear strap). When the probe scans are done through the access holes in the close-out plate, it will be necessary to balance the probe more than once during the scans because the probe to part angle will change.

6. Inspection Results

A. Refer to Part 6, 51-00-00, Procedure 4, or Part 6, 51-00-00, Procedure 23, par. 7 to make an analysis of possible crack signals.

BOEING PROPRIETARY - Copyright © Unpublished Work - See title page for details

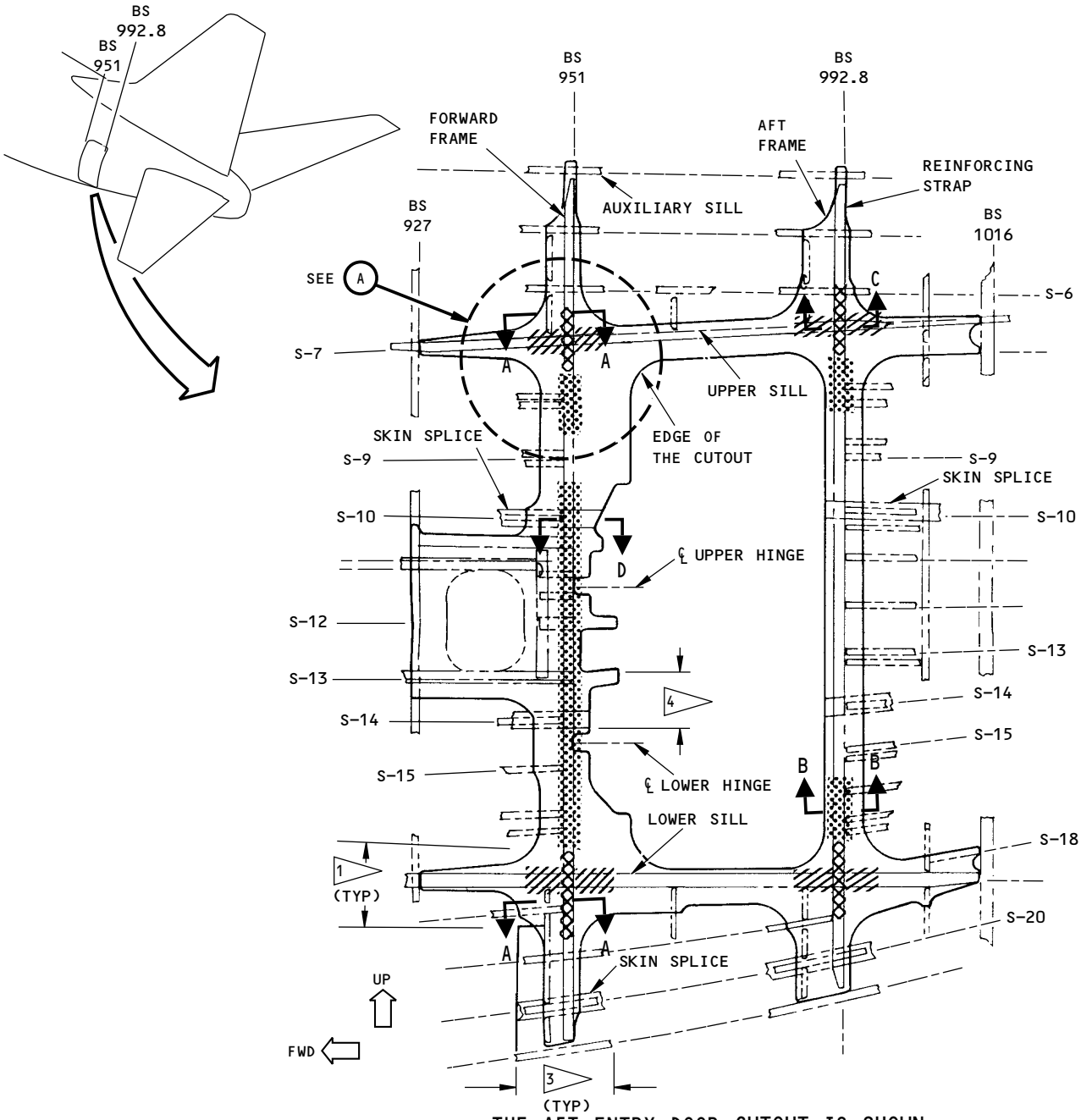

THE AFT ENTRY DOOR CUTOUT IS SHOWN;
THE AFT GALLEY DOOR CUTOUT IS OPPOSITE

NOTES:

- THIS IS AN EXTERNAL VIEW AS YOU LOOK INBOARD
- AREAS TO BE EXAMINED AS SPECIFIED BY 1 (INNER CHORD)
- AREAS TO BE EXAMINED AS SPECIFIED BY 2 (OUTER CHORD)
- AREAS TO BE EXAMINED AS SPECIFIED BY 3 (SILL INNER CHORD)

2159962 S0000472231_V1

Aft Entry and Aft Galley Door Cutouts
Figure 1 (Sheet 1 of 3)

BOEING PROPRIETARY - Copyright © Unpublished Work - See title page for details

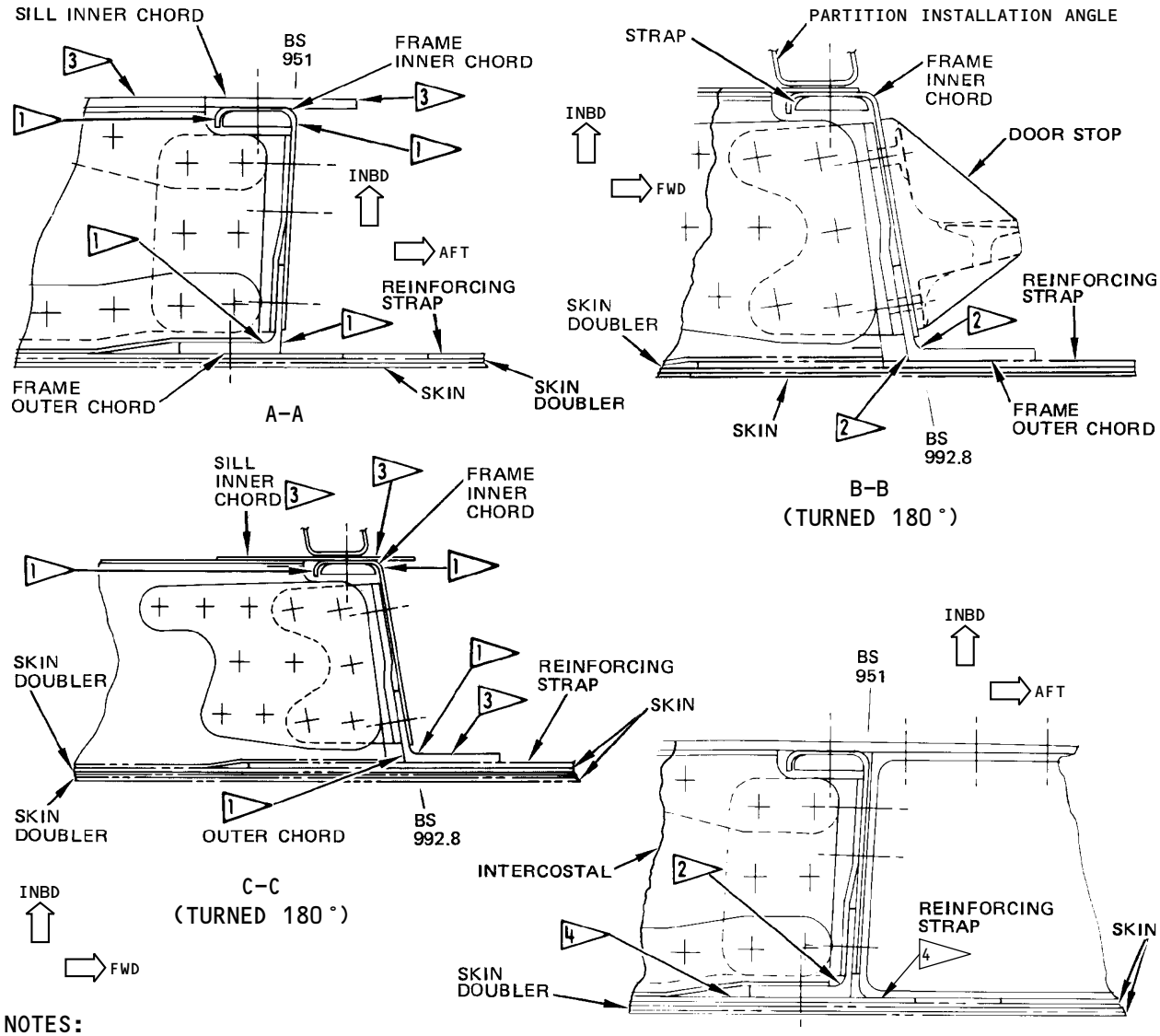

NOTES:

- THE CROSS SECTIONS OF THE FRAMES AT THE AFT ENTRY DOOR ARE SHOWN ABOVE. THE AFT GALLEY FRAMES ARE OPPOSITE.

1 PUT THE PROBE ON THE INNER AND OUTER CHORDS OF THE FRAME AND DO A VERTICAL SCAN 5.5 INCHES (140 MM) ABOVE AND BELOW THE INTERSECTION OF THE FRAME AND SILL AT THE AREAS IDENTIFIED BY XXXX .

2 PUT THE PROBE ON THE OUTER CHORD OF THE FRAME AND DO A VERTICAL SCAN AT THE AREAS IDENTIFIED BY ▒▒▒ . BE SURE TO DO A SCAN AS NEAR AS POSSIBLE TO THE INTERCOSTALS.
NOTE: IF A CLOSE-OUT PLATE IS INSTALLED AT BS 951 BETWEEN STRINGERS 10 AND 14, DO THE INSPECTION THROUGH THE ACCESS HOLES IN THE CLOSE-OUT PLATE. SEE VIEW A IF A CLOSE-OUT PLATE IS INSTALLED.

3 PUT THE PROBE ON THE INNER CHORD OF THE SILL AND DO A CIRCULAR SCAN AROUND THE FASTENERS FOR 5.5 INCHES (140 MM) ON EACH SIDE OF THE FRAME AT THE AREAS IDENTIFIED BY ////, .

4 PUT THE PROBE ON THE REINFORCING STRAP AND DO A VERTICAL SCAN BETWEEN STRINGERS S-9 AND S-10 AND BETWEEN STRINGERS S-13 AND S-14. USE THE EDGE OF THE OUTER CHORD AS A PROBE GUIDE. IF A CLOSE-OUT PLATE IS INSTALLED, ONLY THE REINFORCING STRAP ON THE FORWARD SIDE OF THE FRAME CAN BE EXAMINED BETWEEN S-13 AND S-14.

2159963 S0000472232_V1

Aft Entry and Aft Galley Door Cutouts
Figure 1 (Sheet 2 of 3)

BOEING PROPRIETARY - Copyright © Unpublished Work - See title page for details

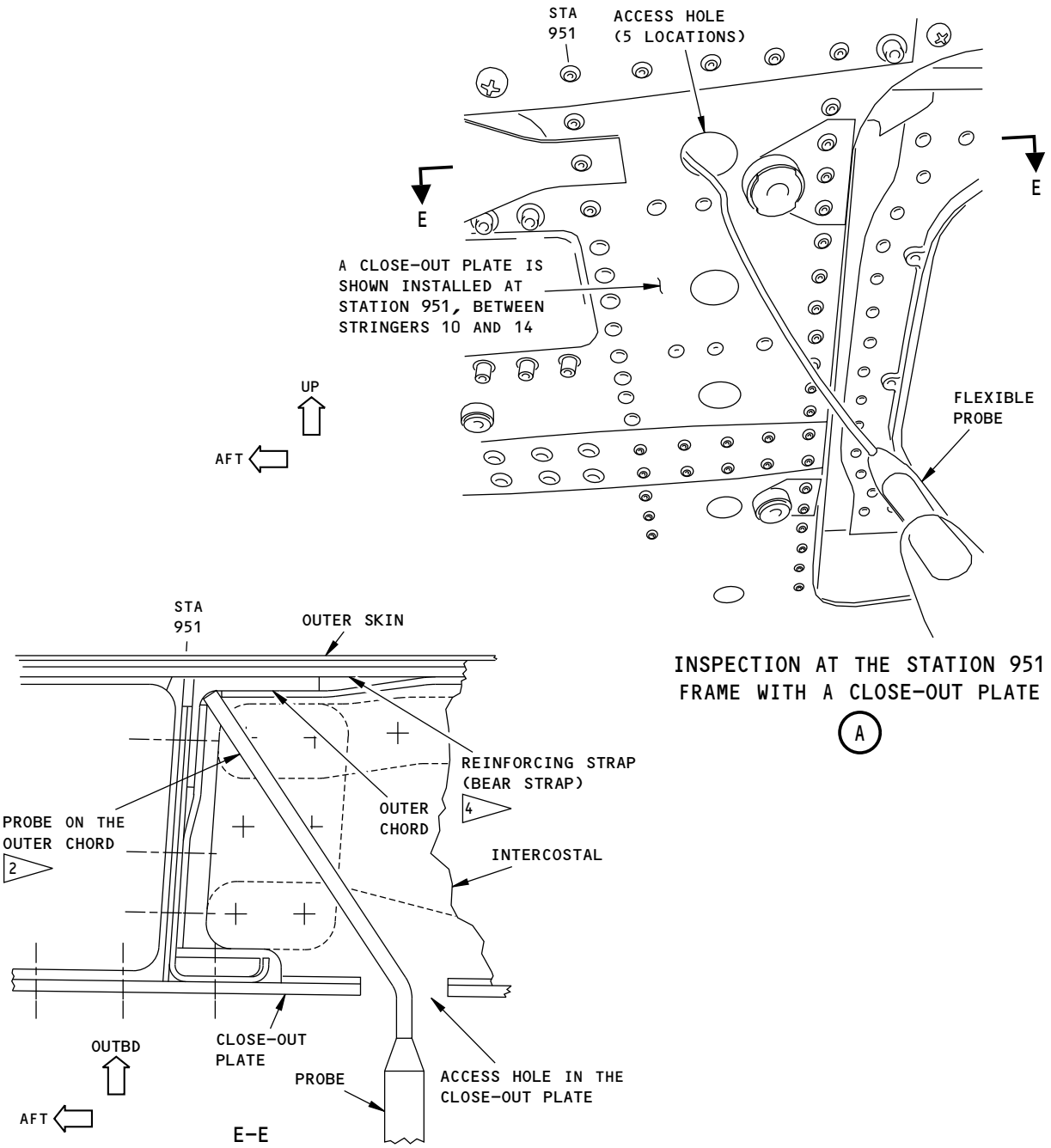

NOTES:

- THE BENDS IN YOUR PROBE CAN LOOK DIFFERENT THAN THE BENDS SHOWN IN THE PROBES IN THESE VIEWS.
- DO THE SCANS ON THE OUTER CHORD AND BEAR STRAP IN A VERTICAL DIRECTION.
- THE LEFT SIDE IS SHOWN; THE RIGHT SIDE IS OPPOSITE.

2159964 S0000472233_V1

Aft Entry and Aft Galley Door Cutouts
Figure 1 (Sheet 3 of 3)

BOEING PROPRIETARY - Copyright © Unpublished Work - See title page for details

PART 6 - EDDY CURRENT

OUTER CHORD INSPECTION AT THE HINGE PIN OF THE BS 1156 BULKHEAD

1. Purpose

A. Use this procedure to examine the aluminum outer chord that is at the hinge pin of the BS 1156 bulkhead for cracks. This procedure can find the cracks that are in the forward and/or aft direction and extend out from under the bushing retainer plate.

B. This procedure is a surface eddy current inspection and uses an instrument with an impedance plane display or a meter display.

C. 737 Supplemental Structural Inspection Document (D6-82669) Reference:

(1) Item: F-32

2. Equipment

A. General

(1) Use inspection equipment that can be calibrated on the reference standard as specified in Paragraph 4.

(2) Refer to Part 1, 51-01-00, for data about the equipment manufacturers.

B. Instrument, Probes and Reference Standard

(1) Refer to Part 6, 51-00-00, Procedure 4 (if a meter display instrument is used), or Part 6, 51-00-00, Procedure 23 (if an impedance plane display instrument is used) for instrument, probe and reference standard instructions to do this inspection.

(2) Use a shielded, pencil probe with a maximum diameter of 0.13 inch (3.2 mm).

3. Prepare for the Inspection

A. Get access to the inspection areas as follows:

(1) Remove access panels 9105L and 9205R from the lower surface of the horizontal stabilizer.

(2) Remove the panel from the inboard rib.

B. Remove loose paint, dirt and grease from the inspection surface.

4. Instrument Calibration

A. Calibrate the instrument as specified in Part 6, 51-00-00, Procedure 4 (if a meter display instrument is used), or Part 6, 51-00-00, Procedure 23 (if an impedance plane display instrument is used).

5. Inspection Procedure

A. Examine the outer chord for cracks as specified in Part 6, 51-00-00, Procedure 4 (if a meter display instrument is used), or Part 6, 51-00-00, Procedure 23 (if an impedance plane display instrument is used) and as follows:

(1) Use the edge of the bushing retainer plate as a probe guide to examine the outer chord inspection areas (see Figure 1). It will be necessary to hold back the rubber seal from the bushing retainer plate as you make a scan of the aft inspection area.

6. Inspection Results

A. Refer to the applicable inspection procedure for data to help make an analysis of the inspection results.

BOEING PROPRIETARY - Copyright © Unpublished Work - See title page for details

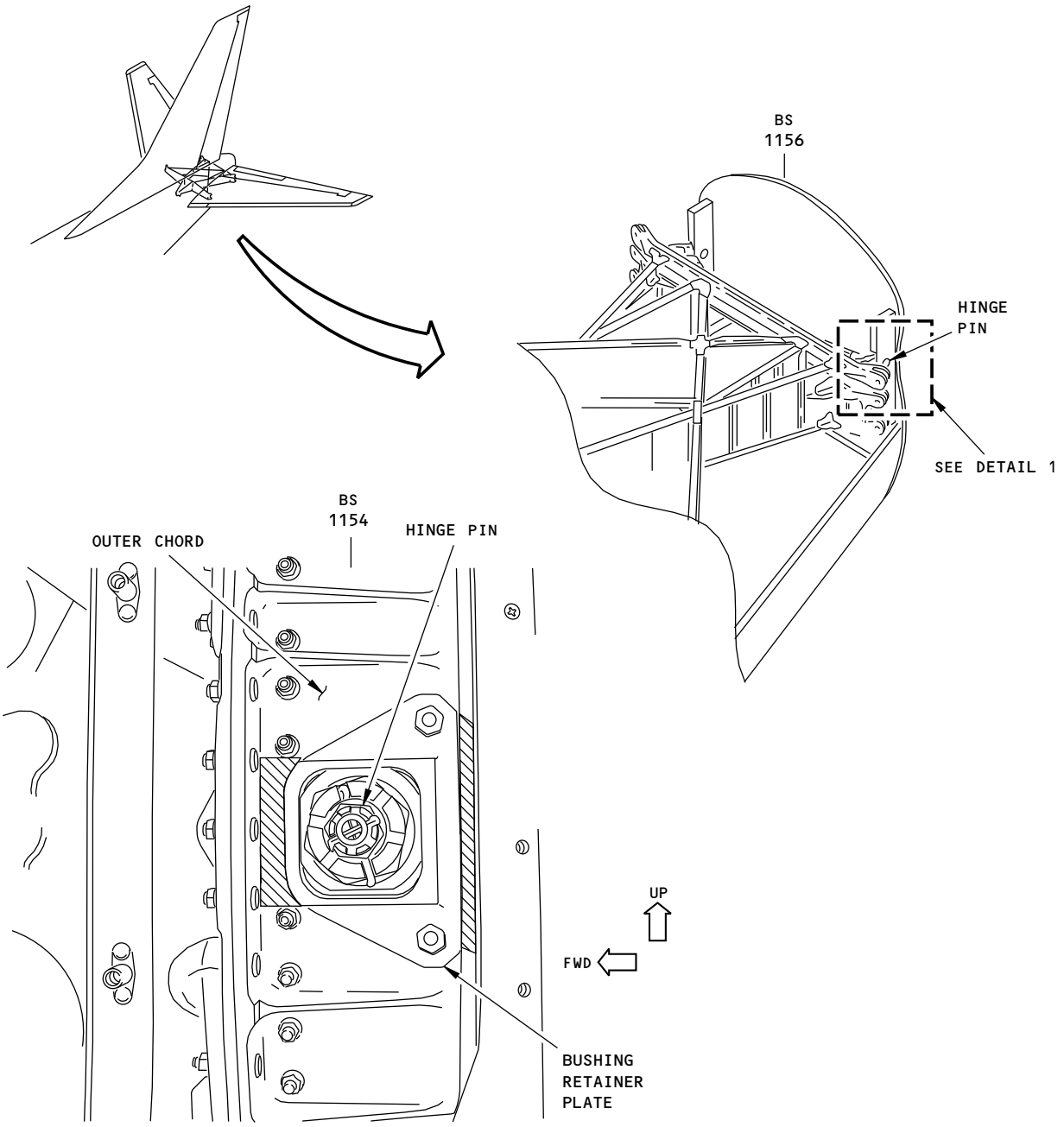

THE LEFT SIDE IS SHOWN
(THE RIGHT SIDE IS OPPOSITE)

DETAIL 1

NOTE:

INSPECTION AREAS OF THE OUTER CHORD. THE INSPECTION AREAS ARE ADJACENT TO THE BUSHING RETAINER PLATE

2159965 S0000472235_V1

Outer Chord Inspection at the Hinge Pin of the BS 1156 Bulkhead
Figure 1

BOEING PROPRIETARY - Copyright © Unpublished Work - See title page for details

PART 6 - EDDY CURRENT

SHEAR TIED FRAMES FROM BS 259.5 TO 540

1. Purpose

A. This procedure uses surface eddy current to examine the inner and fail-safe chords and the frames of the shear tied frames for cracks. The inspection area is from Stringers 13 to 17, from BS 259.5 to 294.5 and BS 344 to 540, on each side of the airplane. See Figure 1.

B. This procedure examines around the fasteners on the forward and aft sides of the frame web where the fail-safe chord is attached and on the inboard and outboard sides of the frame inner chord (see Details I and II in Figure 1).

C. This procedure uses an instrument with an impedance plane display or a meter display.

D. 737 Supplemental Structural Inspection Document (D6-82669) Reference:

(1) Item: F-33C

2. Equipment

A. General

(1) Use inspection equipment that can be calibrated on the reference standard as specified in Paragraph 4.

(2) Refer to Part 1, 51-01-00, for data about the equipment manufacturers.

B. Instrument, Probes and Reference Standard

(1) Use an impedance plane display or a meter display instrument that can operate at a frequency range of 50 to 500 kHz.

(2) Refer to Part 6, 51-00-00, Procedure 4 (if a meter display instrument is used) or Part 6, 51-00-00, Procedure 23 (if an impedance plane display instrument is used) for the equipment to do this inspection.

(3) Use a shielded probe with a maximum diameter of 0.125 inch (3.18 mm).

3. Prepare for the Inspection

A. Remove the internal panels and insulation blankets in the fuselage, as necessary, to get access to the inspection areas.

B. Remove loose paint, dirt, grease, and sealant from the surfaces of the inspection area.

4. Instrument Calibration

A. Calibrate the instrument as specified in Part 6, 51-00-00, Procedure 4 (if a meter display instrument is used) or Part 6, 51-00-00, Procedure 23 (if an impedance plane display instrument is used).

5. Inspection Procedure

A. Examine around the fasteners in the areas that follow from Stringers 13 thru 17 and from BS 259.5 to 294.5 and BS 344 to 540 on the right side of the airplane and BS 259.5 to 294.5 and BS 360 to 540 on the left side of the airplane (see Figure 1).

(1) Frame Inner Chord

(a) Put the probe on the inspection surface adjacent to the fastener (see Details I and II in Figure 1).

(b) Balance the instrument.

BOEING PROPRIETARY - Copyright © Unpublished Work - See title page for details

(c) Use the edge of the fastener as a probe guide and do a 360 degree scan around the fastener.

(d) Do a scan around the fasteners in the inner frame or doubler and around fasteners in the outer frame (see Details I and II in Figure 1).

(2) Frame Inner Chord with Added Structure

(a) Put the probe on the inspection surface adjacent to the edge of the added structure (see Detail I in Figure 1).

(b) Balance the instrument.

(c) Use the edge of the added structure as a probe guide and do the scan along the length of the added structure (see Detail I in Figure 1).

NOTE: If the attached added structure on the frame inner chord is a different configuration than shown in Detail I in Figure 1, do all scans from the edge of the added structure.

(3) Fail–Safe Chord and Frame Web

(a) Put the probe on the inspection surface adjacent to the fastener (see Details I and II in Figure 1).

(b) Balance the instrument.

(c) Use the edge of the fastener as a probe guide and do a 360 degree scan around the fastener.

(d) Do the scan around fasteners on the forward and aft sides of the fail–safe chord and frame (see Details I and II in Figure 1).

6. Inspection Results

A. Signals that are 50% or more of the signal height from the reference standard notch are signs of a possible crack.

B. Remove the fastener and do an open hole inspection to make sure of the results. Refer to Part 6, 51-00-00, Procedure 1 (for meter display instruments), Part 6, 51-00-00, Procedure 11 (for impedance plane display instruments), or Part 6, 51-00-00, Procedure 16 (for rotary scanner instruments) for the open hole inspection procedures.

BOEING PROPRIETARY - Copyright © Unpublished Work - See title page for details

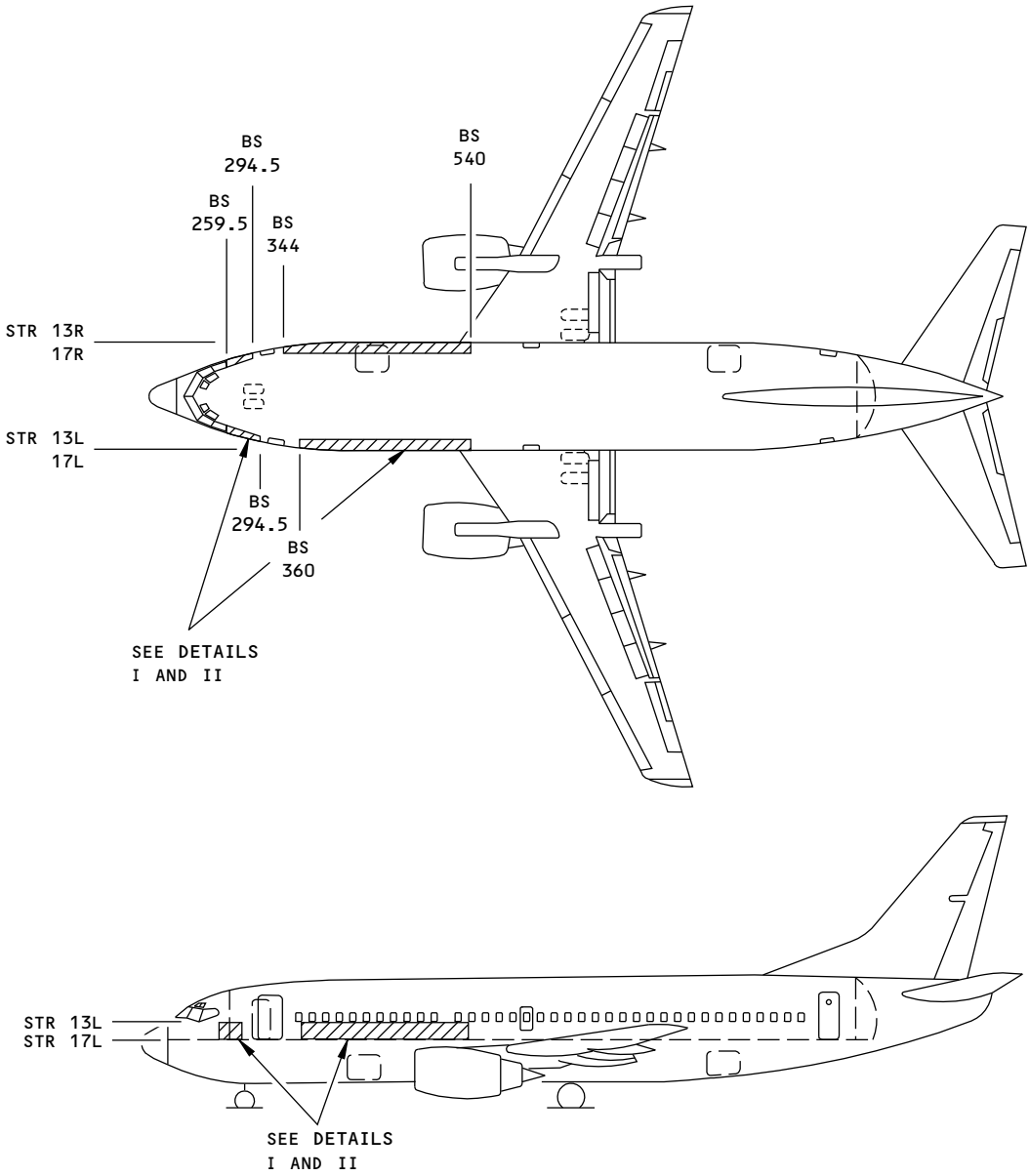

NOTES:

INSPECTION AREA

- THE SHEAR TIED FRAMES ARE EXAMINED FROM STRINGERS 13 TO 17 AND FROM BS 259.5 TO 540 ON THE LEFT AND RIGHT SIDES OF THE AIRPLANE

2159966 S0000472239_V1

Inspection Area
Figure 1 (Sheet 1 of 2)

BOEING PROPRIETARY - Copyright © Unpublished Work - See title page for details

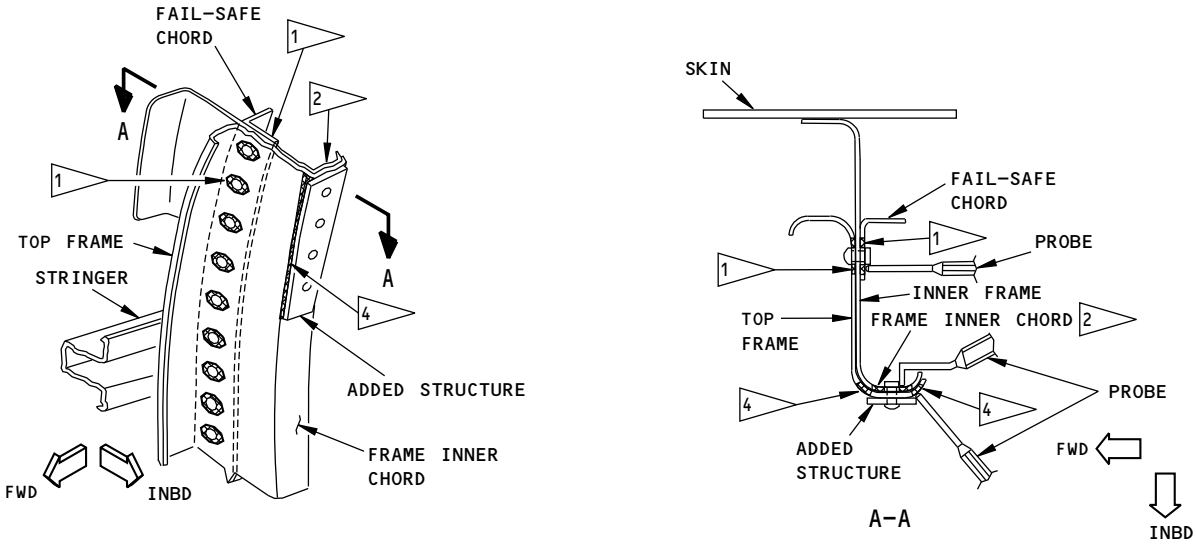

TYPICAL FRAME WITH ADDED STRUCTURE
DETAIL I

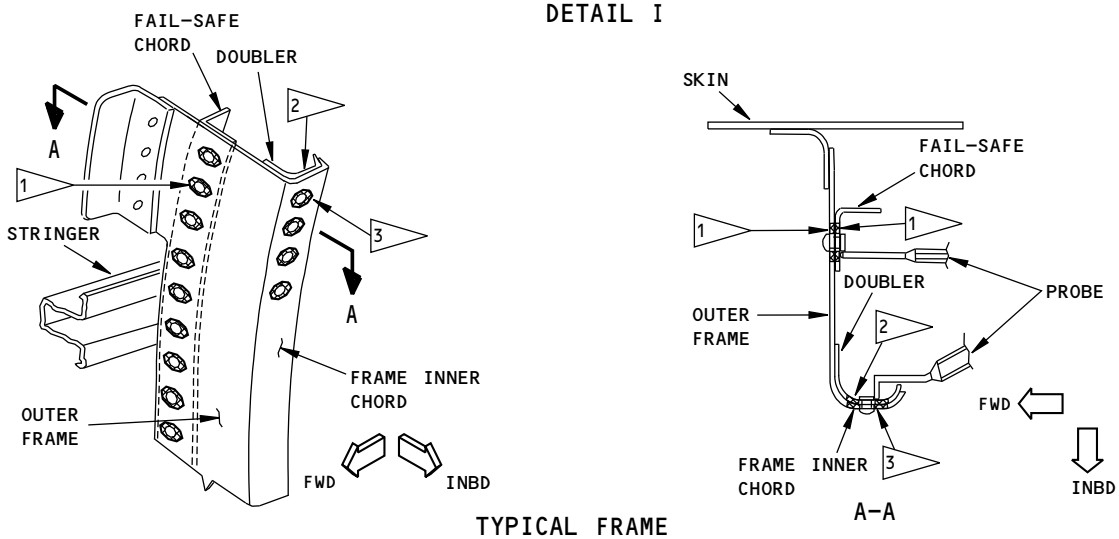

TYPICAL FRAME
DETAIL II

INSPECTION AREA

1 DO A SCAN AROUND THE FASTENERS THAT ATTACH THE FAIL-SAFE CHORD TO THE FRAME WEB.

2 DO A SCAN AROUND THE FASTENERS IN THE INNER FRAME OR DOUBLER AT THE FRAME INNER CHORD.

3 DO A SCAN AROUND THE FASTENERS IN THE OUTER FRAME AT THE FRAME INNER CHORD.

4 DO A SCAN ON THE OUTER FRAME ALONG THE EDGES OF THE ADDED STRUCTURE.

2159967 S0000472240_V1

Inspection Area
Figure 1 (Sheet 2 of 2)

BOEING PROPRIETARY - Copyright © Unpublished Work - See title page for details

PART 6 - EDDY CURRENT

SHEAR TIED FRAMES FROM STRINGERS 13 TO 17 AND FROM BS 727 TO 1016

1. Purpose

A. This procedure uses surface eddy current to examine the inner and fail-safe chords and the frames of the shear tied frames for cracks. The inspection area is from Stringers 13 to 17 and from BS 727 to BS 1016, on each side of the airplane. See Figure 1.

B. This procedure examines around the fasteners on the forward and aft sides of the frame and on the inboard and outboard sides of the frame inner chord (see Details I and II in Figure 1).

C. This procedure uses an instrument with an impedance plane display or a meter display.

D. 737 Supplemental Structural Inspection Document (D6-82669) Reference:

(1) Item: F-34C

2. Equipment

A. General

(1) Use inspection equipment that can be calibrated on the reference standard as specified in Paragraph 4.

(2) Refer to Part 1, 51-01-00, for data about the equipment manufacturers.

B. Instrument, Probes and Reference Standard

(1) Use an impedance plane display or a meter display instrument that can operate at a frequency in the range of 50 to 500 kHz.

(2) Refer to Part 6, 51-00-00, Procedure 4 (if a meter display instrument is used) or Part 6, 51-00-00, Procedure 23 (if an impedance plane display instrument is used) for the equipment to do this inspection.

(3) Use a shielded probe with a maximum diameter of 0.125 inch (3.18 mm).

3. Prepare for the Inspection

A. Remove the internal panels and insulation blankets in the fuselage, as necessary, to get access to the inspection areas.

B. Remove loose paint, dirt, grease, and sealant from the surfaces of the inspection area.

4. Instrument Calibration

A. Calibrate the instrument as specified in Part 6, 51-00-00, Procedure 4 (if a meter display instrument is used) or Part 6, 51-00-00, Procedure 23 (if an impedance plane display instrument is used).

5. Inspection Procedure

A. Examine around the fasteners in the areas that follow from BS 727 to 951 and BS 992.8 to 1016 and from Stringers 13 thru 17 on the left and right sides of the airplane (see Figure 1).

(1) Frame Inner Chord

(a) Put the probe on the inspection surface adjacent to the fastener (see Details I and II in Figure 1).

(b) Balance the instrument.

BOEING PROPRIETARY - Copyright © Unpublished Work - See title page for details

(c) Use the edge of the fastener as a probe guide and do a 360 degree scan around the fastener.

(d) Do a scan around the fasteners in the inner frame or doubler and around fasteners in the outer frame (see Details I and II in Figure 1).

(2) Frame Inner Chord with Added Structure

(a) Put the probe on the inspection surface adjacent to the edge of the added structure (see Detail I in Figure 1).

(b) Balance the instrument.

(c) Use the edge of the added structure as a probe guide and do the scan along the length of the added structure (see Detail I in Figure 1).

NOTE: If the attached added structure on the frame inner chord is a different configuration than shown in Detail I in Figure 1, do all scans from the edge of the added structure.

(3) Fail–Safe Chord and Frame

(a) Put the probe on the inspection surface adjacent to the fastener (see Details I and II in Figure 1).

(b) Balance the instrument.

(c) Use the edge of the fastener as a probe guide and do a 360 degree scan around the fastener.

(d) Do the scan around the fasteners on the forward and aft sides of the fail-safe chord and frame (see Details I and II in Figure 1).

6. Inspection Results

A. Signals that are 50% or more of the signal height from the reference standard notch are signs of a possible crack.

B. Remove the fastener and do an open hole inspection to make sure of the results. Refer to Part 6, 51-00-00, Procedure 1 (for meter display instruments), Part 6, 51-00-00, Procedure 11 (for impedance plane display instruments), or Part 6, 51-00-00, Procedure 16 (for rotary scanner instruments) for the open hole inspection procedures.

BOEING PROPRIETARY - Copyright © Unpublished Work - See title page for details

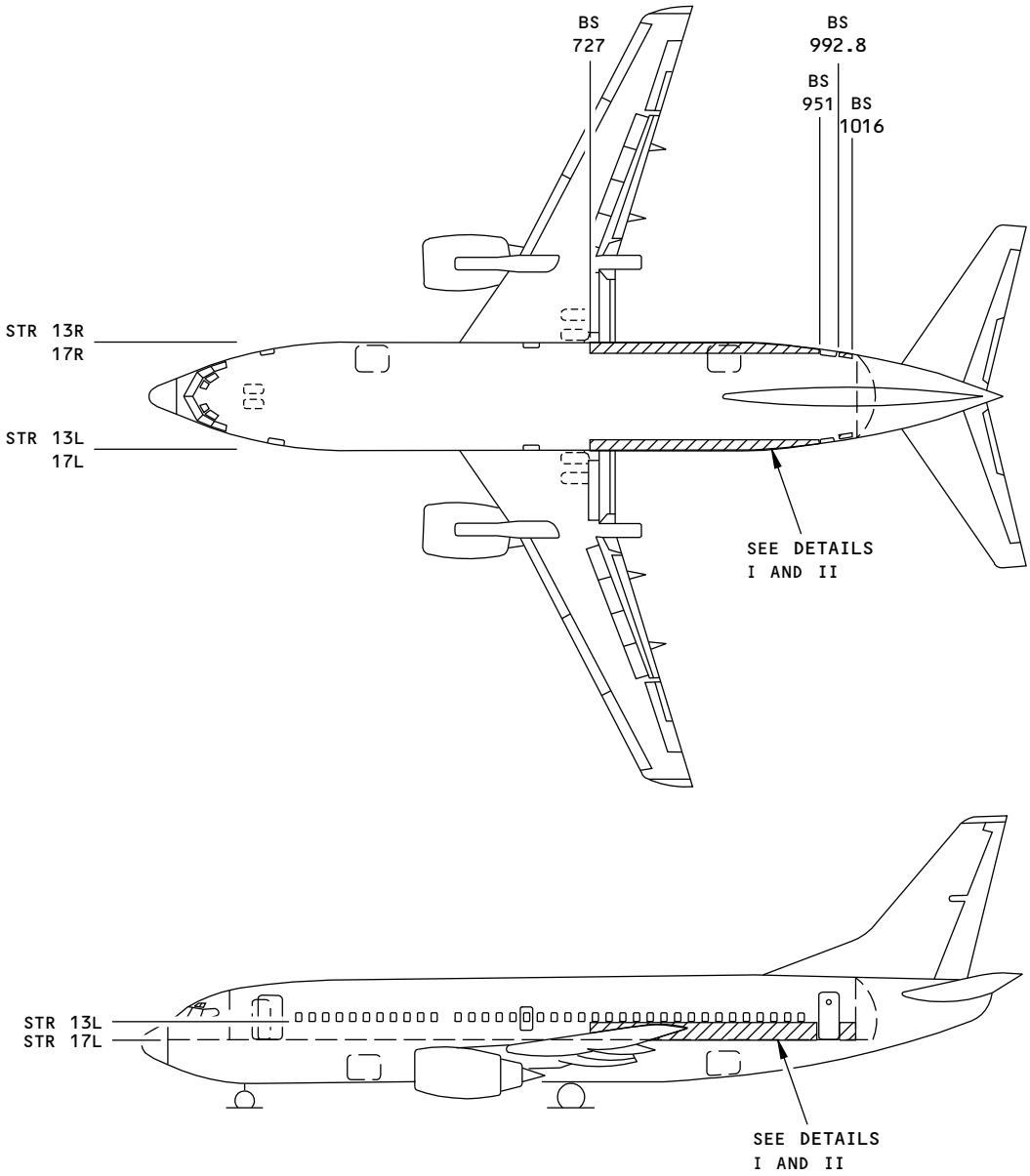

NOTES:

INSPECTION AREA

- THE SHEAR TIED FRAMES ARE EXAMINED FROM STRINGERS 13 TO 17 AND FROM BS 727 TO 1016 ON THE LEFT AND RIGHT SIDES OF THE AIRPLANE

2159968 S0000472242_V1

Inspection Area
Figure 1 (Sheet 1 of 2)

BOEING PROPRIETARY - Copyright © Unpublished Work - See title page for details

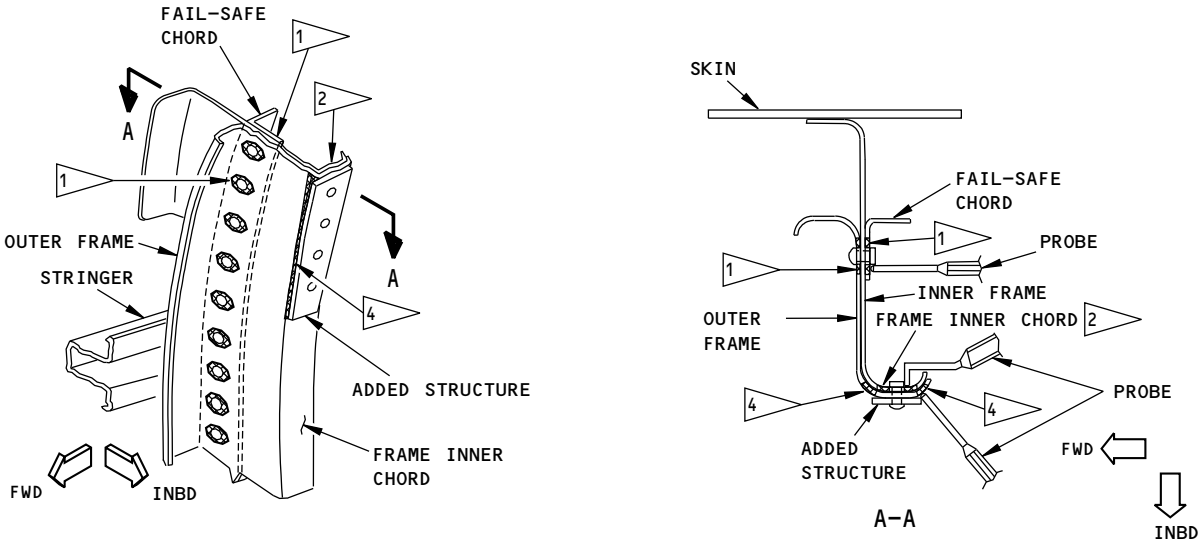

TYPICAL FRAME WITH ADDED STRUCTURE
DETAIL I

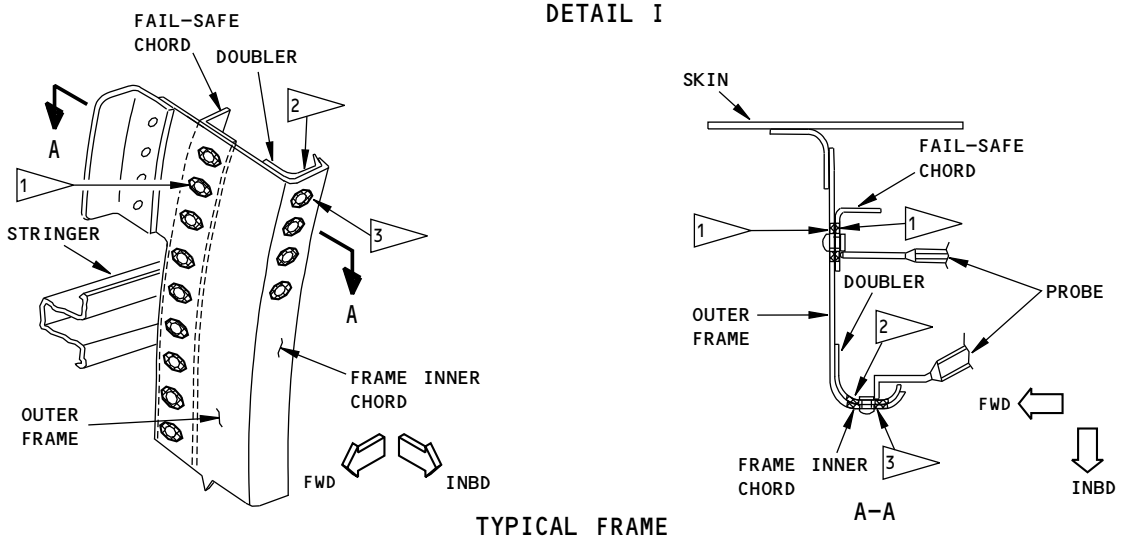

TYPICAL FRAME
DETAIL II

INSPECTION AREA

1 DO A SCAN AROUND THE FASTENERS THAT ATTACH THE FAIL-SAFE CHORD TO THE FRAME.

2 DO A SCAN AROUND THE FASTENERS IN THE INNER FRAME OR DOUBLER AT THE FRAME INNER CHORD.

3 DO A SCAN AROUND THE FASTENERS IN THE OUTER FRAME AT THE FRAME INNER CHORD.

4 DO A SCAN ON THE OUTER FRAME ALONG THE EDGES OF THE ADDED STRUCTURE.

2159969 S0000472243_V1

Inspection Area
Figure 1 (Sheet 2 of 2)

BOEING PROPRIETARY - Copyright © Unpublished Work - See title page for details

PART 6 - EDDY CURRENT

UPPER LOBE FRAME AT STRINGER CLIPS

1. **Purpose**

   A. This procedure uses eddy current to do a surface inspection for cracks in the upper lobe frames or the added structure at the stringer clips. The inspection area is stringers S-13L to S-13R in the areas from BS 360 to BS 540 and BS 727 to BS 1016 (see Figure 1).

   B. A specially designed, differential type, surface probe is used to examine the frame web for cracks at the fasteners that attach the stringer clip to the frame web (see Figure 4).

   C. A shielded, right angle or straight, pencil probe is used to examine the inner and outer chords of the frame (see Figure 5) and along the edges of added structure at fasteners in the chord (see Figure 6).

   D. 737 Supplemental Structural Inspection Document (D6-82669) Reference:

      (1) Item: F-36

2. **Equipment**

   A. General

      (1) Use inspection equipment that can be calibrated on the reference standard as specified in Paragraph 4.

      (2) Refer to Part 1, 51-01-00, for data about the equipment manufacturers.

   B. Instruments

      (1) Use an impedance plane display or a meter display instrument that operates at a frequency range of 50 kHz to 500 kHz.

      (2) The instruments that follow were used to help prepare this procedure.

         (a) NDT 19e, Nortec 1000/2000; Staveley Instrument

         (b) Phasec 2D; Hocking

         (c) Miz 10B; Zetec, Inc.

   C. Specially Designed Surface Probe

      (1) Use the specially designed surface probe that is a differential type made to turn around the head or tail of the fastener.

      (2) The probe that follows was used to help prepare this procedure.

         (a) NEC-2184; NDT Engineering

   D. Shielded Surface Pencil Probe

      (1) Use a shielded, right angle or straight, pencil probe with a maximum diameter of 0.13 inch (3.2 mm).

      (2) The probes that follow were used to help prepare this procedure.

         (a) MTF902-50FX; NDT Engineering Corp.

         (b) MTF-30; NDT Engineering Corp.

   E. Reference Standards

      (1) For the surface inspection to examine the frame web with the specially designed differential probe, use reference standard NDT3047. See Figure 2 for data about the reference standard.

BOEING PROPRIETARY - Copyright © Unpublished Work - See title page for details

(2) For the surface inspection to examine the inner and outer chord with the pencil probe, use reference standard 126 (or the equivalent) identified in Part 6, 51-00-00, Procedure 4, or Part 6, 51-00-00, Procedure 23.

3. Prepare for the Inspection

A. Remove the internal panels and insulation blankets in the inspection areas to get access.

B. Remove loose paint, dirt and sealant from the inspection surfaces.

4. Instrument Calibration

A. To examine the frame web, calibrate the instrument with the specially designed differential probe as follows:

(1) Set the instrument frequency to 80 kHz.

(2) Put the probe on the fastener at probe position 1 on reference standard NDT3047 as shown in Detail I in Figure 3.

(3) Balance the instrument.

(a) If a meter display instrument is used. Set the needle at 20 percent of the display as shown in Detail III in Figure 3.

(b) If an impedance plane display instrument is used. Set the balance point in the center of the display as shown in Detail II in Figure 3.

(4) If an impedance plane display instrument is used, adjust the vertical to horizontal gain to 1:1.

(5) Adjust the instrument for lift-off.

(a) If a meter display instrument is used, adjust the phase control so that the signal is the same when the probe is on bare surface as when the probe is lifted off the part by 0.006 inch (0.15 mm).

(b) If an impedance plane display instrument is used, adjust the phase control so that the signal moves horizontally when the probe is tilted forward and aft as shown in Detail I in Figure 3.

(6) Put the probe on the fastener at probe position 2 on the reference standard notch as shown in Detail I in Figure 3.

NOTE: The differential type probe will cause an up scale and a down scale signal to occur from the balance point as the probe is turned above the notch.

(a) If a meter display instrument is used, turn the probe above the calibration notch to get a maximum signal that goes to the right. Then adjust the instrument gain to get a signal from the notch that is 80 percent of the display (see Details I and III in Figure 3).

(b) If an impedance plane display instrument is used, turn the probe clockwise and counterclockwise above the calibration notch and adjust the instrument gain to get a signal from the notch that is 80 percent of the display (see Details I and II in Figure 3).

B. To examine the frame inner and outer chord, calibrate the instrument with the shielded pencil probe as follows:

(1) Calibrate the instrument as specified in Part 6, 51-00-00, Procedure 4 (if a meter display instrument is used) or Part 6, 51-00-00, Procedure 23 (if an impedance plane display instrument is used). Use reference standard 126 or an equivalent.

5. Inspection Procedure

A. Examine the frame web for cracks with the specially designed differential probe as follows:

BOEING PROPRIETARY - Copyright © Unpublished Work - See title page for details

(1) Put the probe on a stringer clip fastener in the frame web (see Figure 4).

NOTE: This inspection can be done on the manufactured head or on the driven head of the fastener.

(a) If the differential probe can not be put on the fastener because of added structure, do a shielded surface eddy current inspection (see Paragraph 5.B.).

(2) Balance the instrument.

(3) Turn the probe clockwise, or counterclockwise, 360 degrees around the fastener and monitor the screen display for crack signals.

(4) Do Paragraph 5.A.(1) thru Paragraph 5.A.(3) until the frame web has been examined for cracks at all of the stringer clip fasteners.

B. Examine the inner and outer chords of the frame and the areas with added structure with a shielded pencil probe as follows:

(1) Examine the inner and outer chord as follows:

(a) Put the probe on the inspection surface (see Figure 5).

(b) Balance the instrument.

(c) Examine the inner and outer chord for cracks in the inspection areas shown in Figure 5 as specified in Part 6, 51-00-00, Procedure 4 (if a meter display instrument is used) or Part 6, 51-00-00, Procedure 23 (if an impedance plane display instrument is used).

(2) Examine the fastener areas that have added structure (see Figure 6) as follows:

(a) For inspection areas where there is added structure on one side of the chord:

1) Put the probe on the inspection surface adjacent to the fastener (see Detail II in Figure 6).

2) Balance the instrument.

3) Use the edge of the fastener as a probe guide and do a 360 degree scan around the fastener.

(b) For inspection areas where there is added structure on two sides of the chord:

1) Put the probe on the inspection surface, adjacent to the edge of the added structure that is nearest to the fastener.

2) Balance the instrument.

3) Use the edge of the added structure as a probe guide and do the scan as shown in Detail I in Figure 6.

NOTE: If the added structure is different than shown in Figure 6, do all scans from the adjacent edge of the added structure that is nearest to the fastener.

6. Inspection Results

A. Signals that occur during the inspection that are 50% (or more) of the signal height from the notch of the reference standard are possible crack indications.

B. To make sure a crack signal is from a crack, remove the fastener and do a hole inspection. Refer to Part 6, 51-00-00, Procedure 1 (for meter display instruments), Part 6, 51-00-00, Procedure 11 (for impedance plane display instruments), or Part 6, 51-00-00, Procedure 16 (for rotary scanner instruments) for the hole inspection procedures.

BOEING PROPRIETARY - Copyright © Unpublished Work - See title page for details

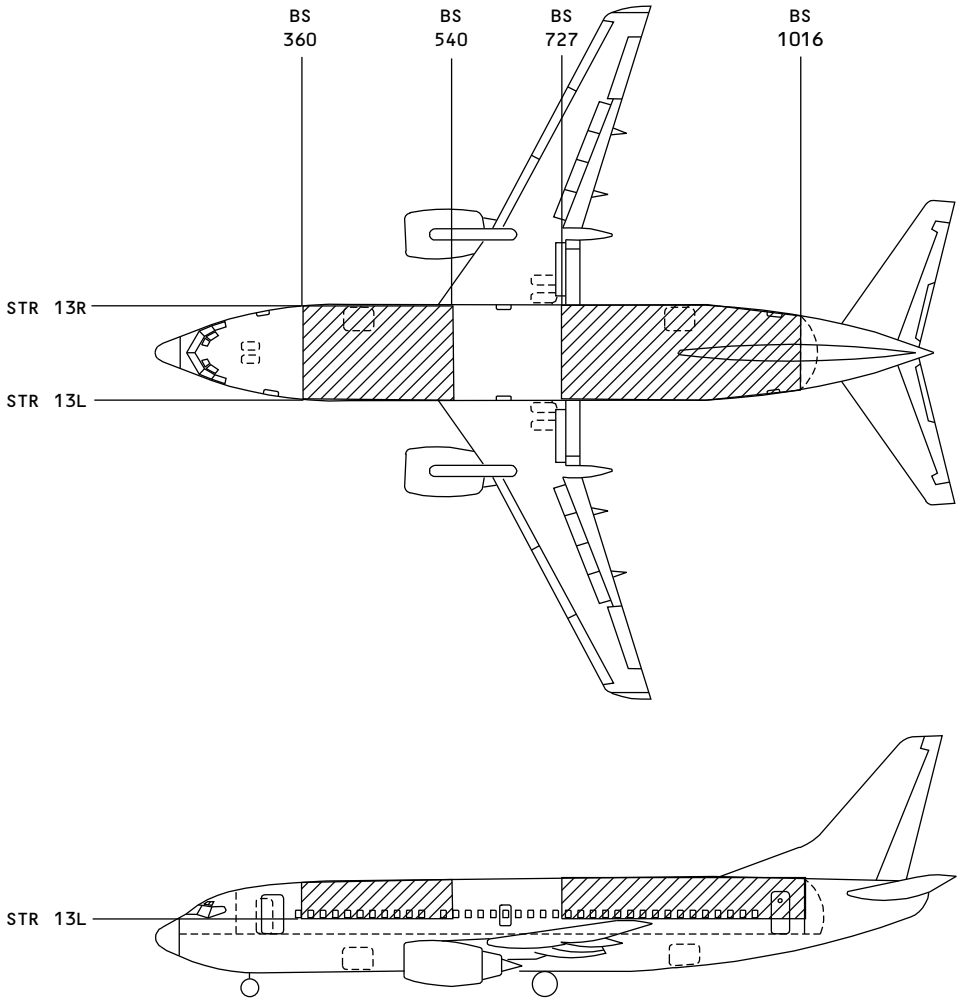

= INSPECTION AREA

2159977 S0000472245_V1

Upper Lobe Frame Inspection Areas - Stringers 13L to 13R; from BS 360 to BS 540 and BS 727 to BS 1016
Figure 1

BOEING PROPRIETARY - Copyright © Unpublished Work - See title page for details

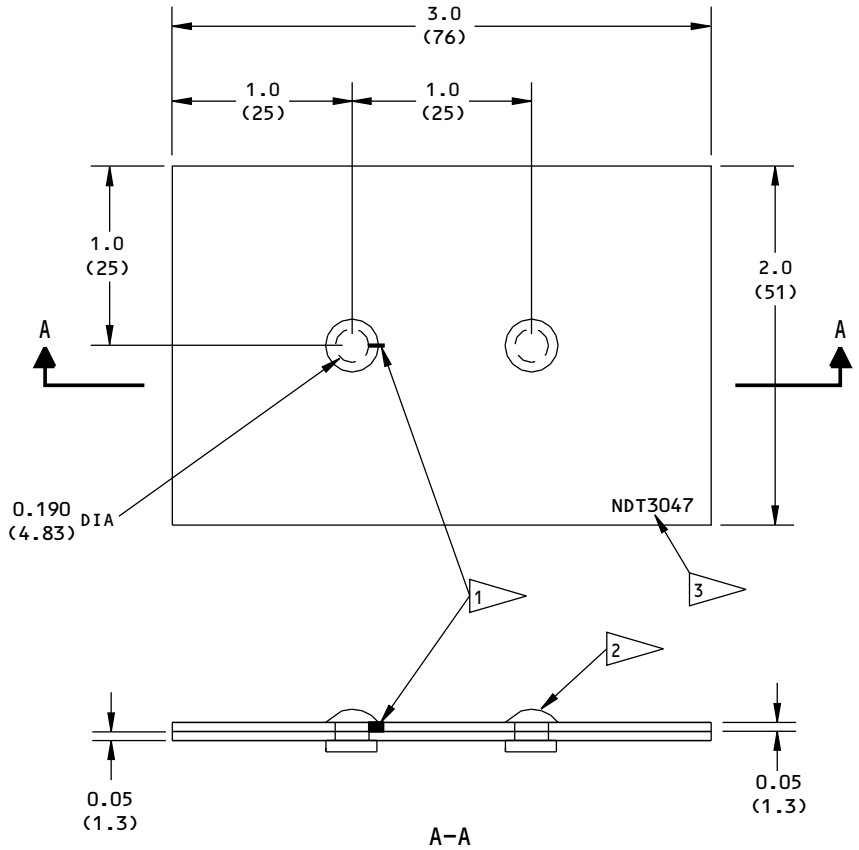

NOTES:

- ALL DIMENSIONS ARE IN INCHES (MILLIMETERS ARE IN PARENTHESES).
- TOLERANCE (UNLESS SPECIFIED DIFFERENTLY):

INCHES	MILLIMETERS
X.XXX = ±0.002	X.XXX = ±0.05
X.XX = ±0.025	X.XX = ±0.1
X.X = ±0.050	X.X = ±1.0

- MATERIAL: EACH LAYER IS 7075-T6 CLAD
- SURFACE ROUGHNESS = 63 Ra OR BETTER.

1 EDM NOTCH:
WIDTH: 0.005 (0.127)
DEPTH: THROUGH THICKNESS
LENGTH: 0.080 (2.03)

2 BACR15FT6D5 OR BACR15FT6AD5 (2 LOCATIONS)

3 ETCH OR STEEL STAMP THE REFERENCE STANDARD NUMBER NDT3047 AT (APPROXIMATELY) THIS LOCATION.

2159978 S0000472246_V1

Reference Standard NDT3047
Figure 2

BOEING PROPRIETARY - Copyright © Unpublished Work - See title page for details

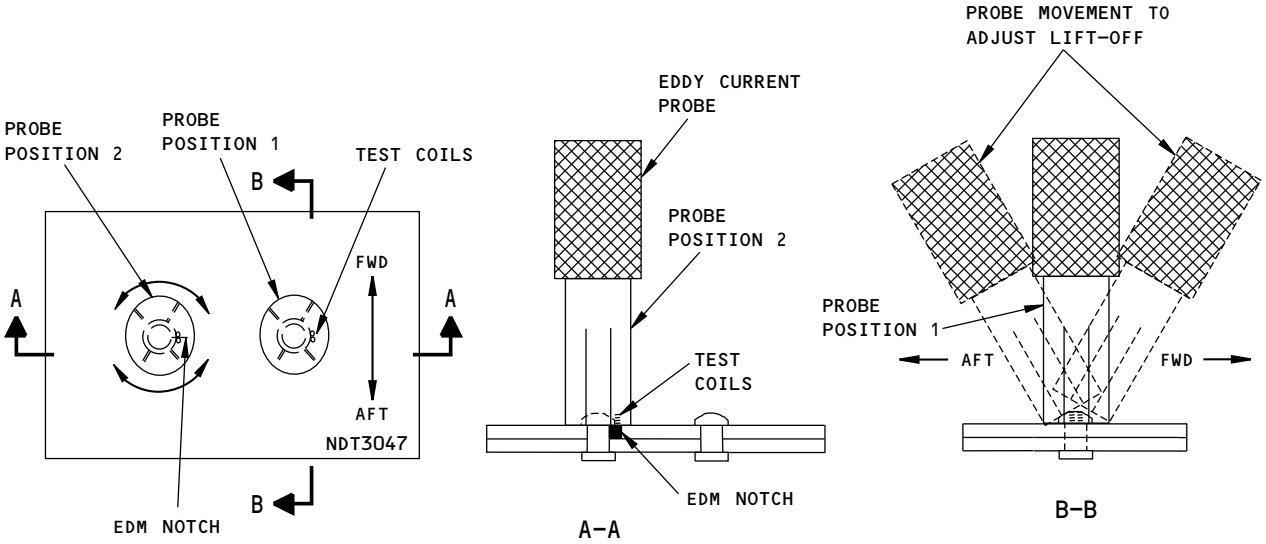

DETAIL I
CALIBRATION PROBE POSITIONS

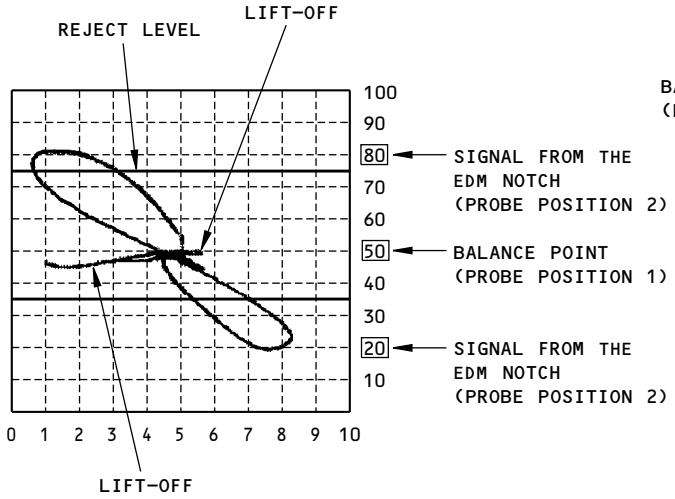

IMPEDANCE PLANE DISPLAY
DETAIL II

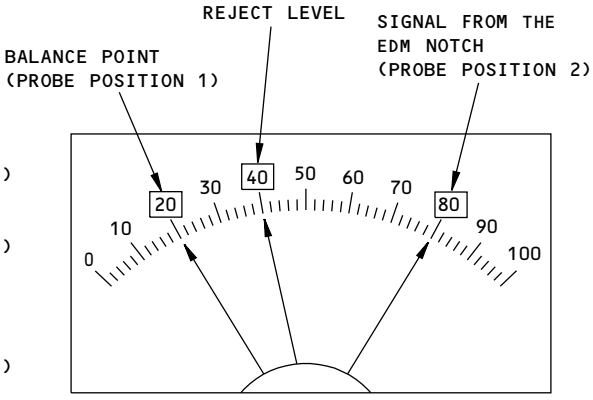

METER DISPLAY
DETAIL III

CALIBRATION SCREEN DISPLAYS

2159986 S0000472247_V1

Calibration and Probe Positions for the Specially Designed Differential Probe Inspections
Figure 3

BOEING PROPRIETARY - Copyright © Unpublished Work - See title page for details

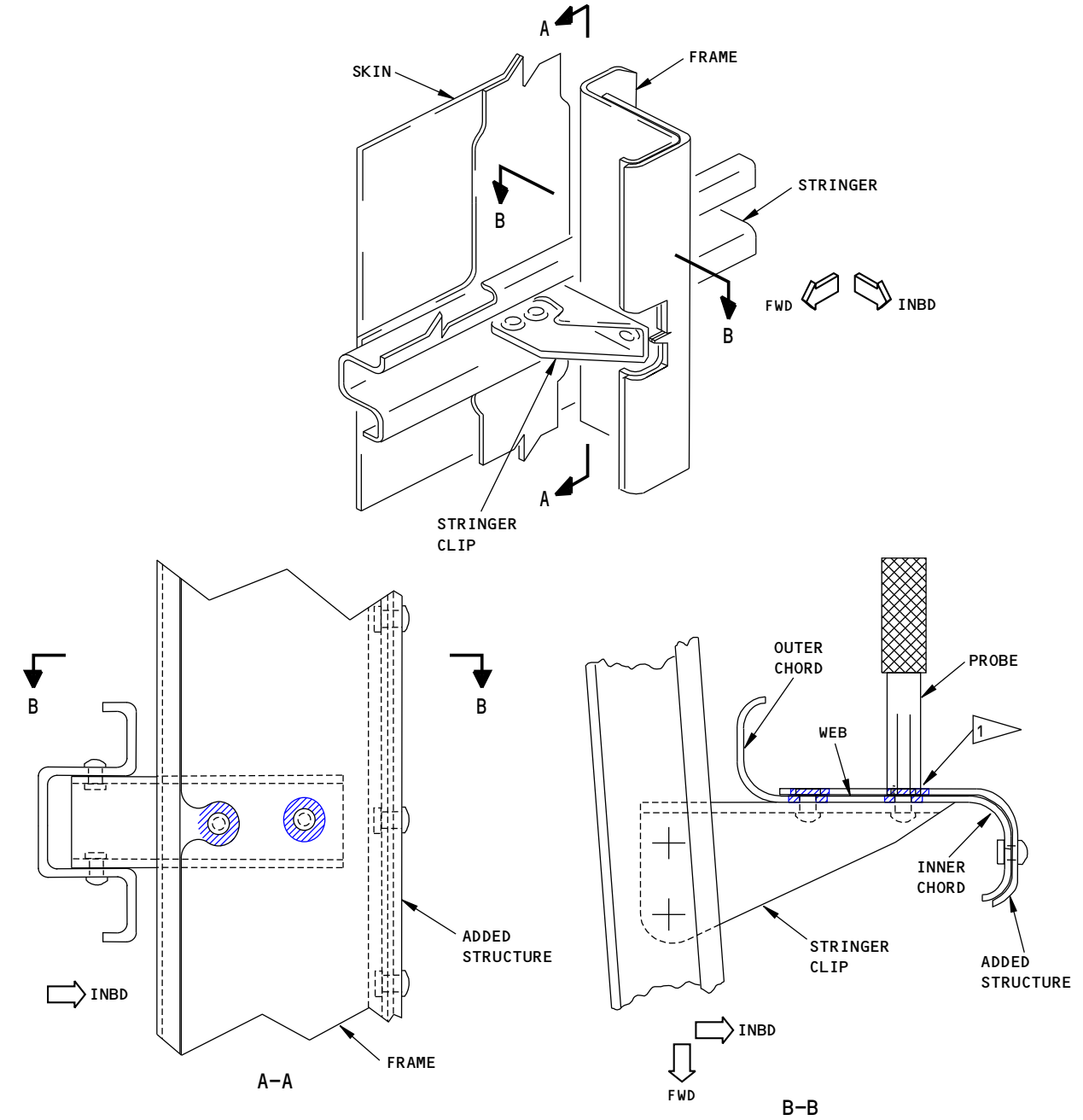

NOTES:

= INSPECTION AREA

1 MOVE THE PROBE 360 DEGREES AROUND THE FASTENER TO DO A SCAN OF THE WEB OR THE ADDED STRUCTURE OF THE FRAME.

2159989 S0000472248_V2

Inspection Areas for the Specially Designed Differential Probe Inspections
Figure 4

BOEING PROPRIETARY - Copyright © Unpublished Work - See title page for details

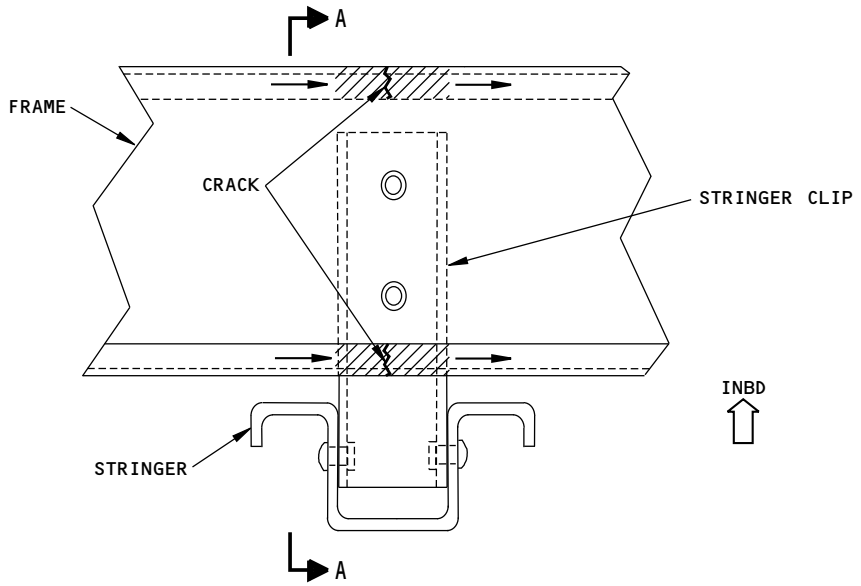

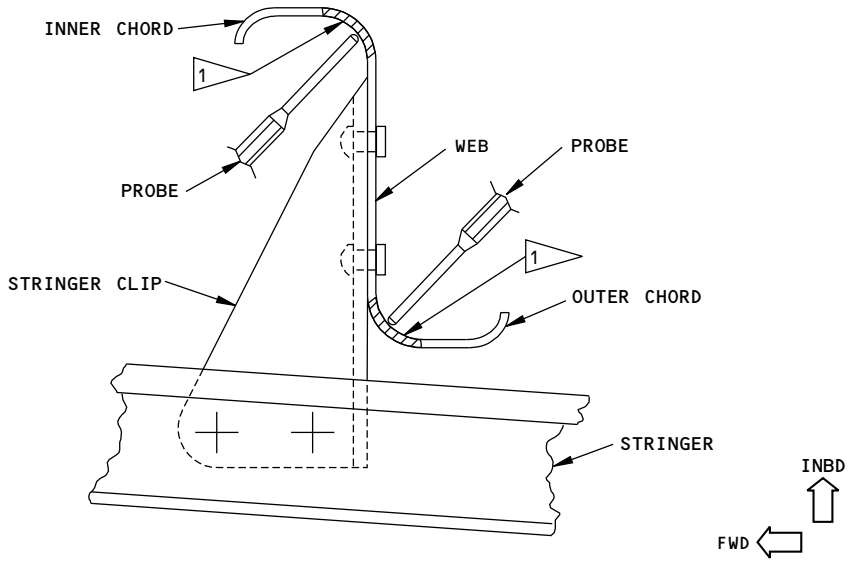

A-A

NOTES:

= INSPECTION AREA

1 = REFER TO PART 6, 51-00-00, PROCEDURE 4, FIGURE 11 OR PROCEDURE 23, FIGURE 13 FOR THE INSPECTION ON A RADIUS PROCEDURE.

= SCAN DIRECTION

2159991 S0000472249_V2

Inner and Outer Chord Inspection Areas for the Shielded Pencil Probe Inspections with No Added Structure
Figure 5

BOEING PROPRIETARY - Copyright © Unpublished Work - See title page for details

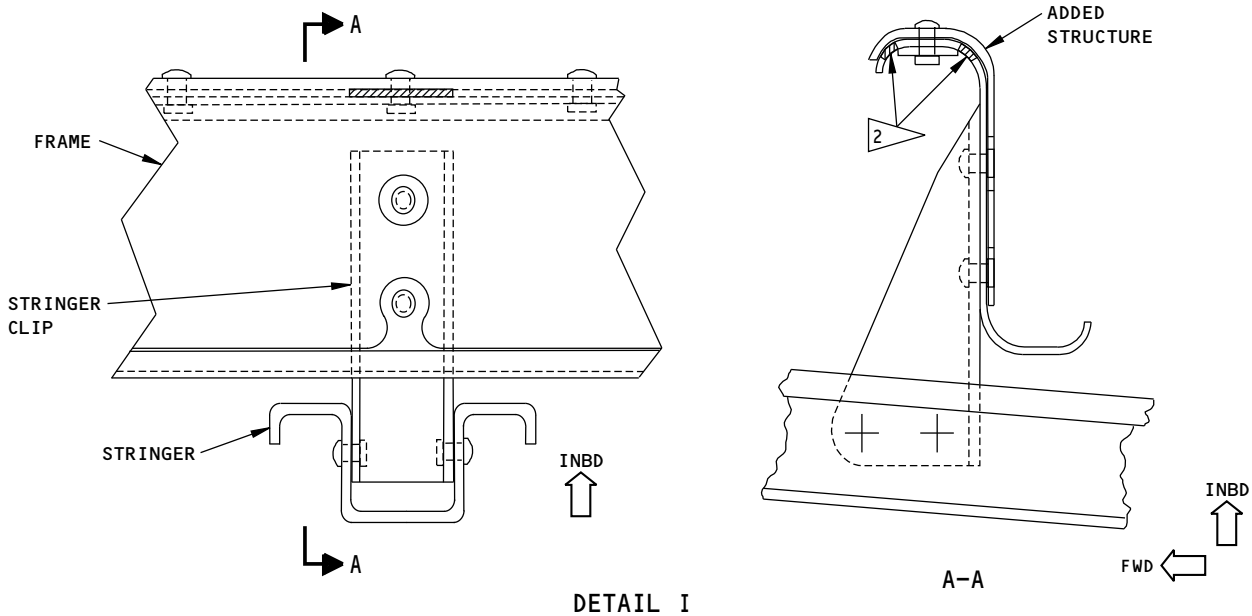

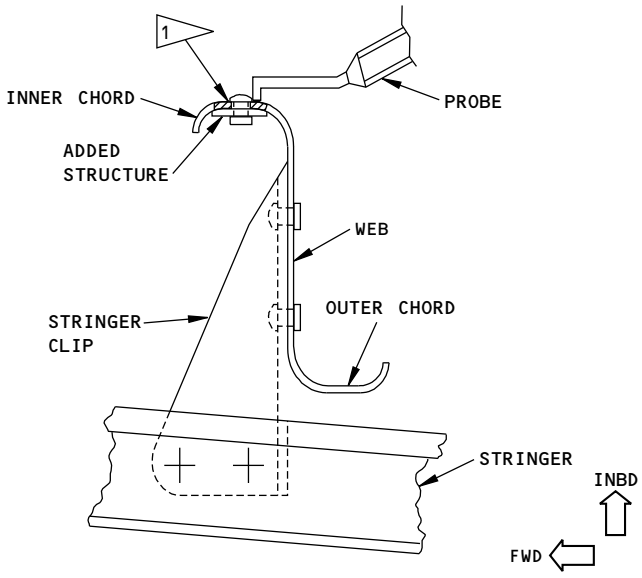

NOTES:

= INSPECTION AREA

1 = DO A SCAN AROUND THE FASTENER IN THE FRAME CHORD IF THERE IS ADDED STRUCTURE ON ONE SIDE OF THE CHORD.

2 = DO A SCAN ALONG THE EDGES OF THE ADDED STRUCTURE AT THE FRAME CHORD FASTENER IF THERE IS ADDED STRUCTURE ON EACH SIDE OF THE CHORD.

2159992 S0000472250_V1

Inspection Areas for the Shielded Pencil Probe Inspections with Added Structure
Figure 6

BOEING PROPRIETARY - Copyright © Unpublished Work - See title page for details

PART 6 - EDDY CURRENT

FUSELAGE BULKHEAD AT BS 1016

1. **Purpose**
   A. Use this procedure to do a surface eddy current inspection to find cracks in the pressure dome at the web to “Y” chord splice.
   B. This inspection procedure examines the web for cracks on the forward side of the bulkhead, adjacent to “Z” stiffeners, stiffener channels and clips. See Figure 1 for the inspection areas.
   C. This procedure uses a pencil probe and an instrument with an impedance plane display or a meter display.
   D. 737 Supplemental Structural Inspection Document (D6-82669) Reference:
      (1) Item: F-30B
2. **Equipment**
   A. General
      (1) Use inspection equipment that can be calibrated on the reference standard as specified in Paragraph 4.
      (2) Refer to Part 1, 51-01-00, for data about the equipment manufacturers.
   B. Instrument
      (1) Use an eddy current instrument that:
         (a) Has an impedance plane display or a meter display.
         (b) Operates at a frequency range of 50 to 500 kHz.
      (2) The instruments that follow were used to help prepare this procedure.
         (a) Phasec 2200, Phasec 2; Hocking
         (b) Nortec 19e, 1000, 2000; Staveley Instruments
         (c) Locator (meter display); Hocking
   C. Probes
      (1) Use a shielded, 0.125 (3.18 mm) diameter, pencil probe with an angled tip or a flexible shaft.
      (2) The probes that follow were used to help prepare this procedure.
         (a) MTF453-50; NDT Engineering Corp.
         (b) MTF902-50; NDT Engineering Corp.
   D. Reference Standard
      (1) For meter display instruments, refer to Part 6, 51-00-00, Procedure 4, for reference standard data.
      (2) For impedance plane display instruments, refer to Part 6, 51-00-00, Procedure 23, for reference standard data.
3. **Prepare for the Inspection**
   A. Get access to the inspection area from the aft entry door.
   B. Identify the inspection areas. See Figure 1.

BOEING PROPRIETARY - Copyright © Unpublished Work - See title page for details

C. Remove structure as necessary to get access to the inspection area.

NOTE: It is necessary to remove the floor panel to examine the inspection locations below S-18.

D. Clean the inspection area. Remove sealant as necessary. Remove paint only if it is loose.

4. Instrument Calibration

A. Calibrate the instrument as specified in Part 6, 51-00-00, Procedure 4 (if a meter display instrument is used) or Part 6, 51-00-00, Procedure 23 (if an impedance plane display instrument is used).

5. Inspection Procedure

A. Calibrate the instrument as specified in Paragraph 4.

B. Examine the forward side of the web for cracks at each “Z”-stiffener to “Y”-chord splice as follows:

(1) Refer to the inspection instructions in Part 6, 51-00-00, Procedure 4 (if a meter display instrument is used) or Part 6, 51-00-00, Procedure 23 (if an impedance plane display instrument is used).

(2) Put the probe tip on the web and do a surface scan adjacent to the “Z”-stiffener and clip. Use the stiffener and clip as a probe guide. See Figure 1, View 1.

(3) Examine the area between the clip and the doubler at S-3L and S-3R if there is sufficient space for the probe. See Figure 1, View 2.

6. Inspection Results

A. Refer to the applicable inspection procedure for data to help make an analysis of the inspection results. For instruments with a meter display, refer to Part 6, 51-00-00, Procedure 4, for data to help make an analysis of the inspection results. For instruments with an impedance plane display, refer to Part 6, 51-00-00, Procedure 23, for data to help make an analysis of the inspection results.

BOEING PROPRIETARY - Copyright © Unpublished Work - See title page for details

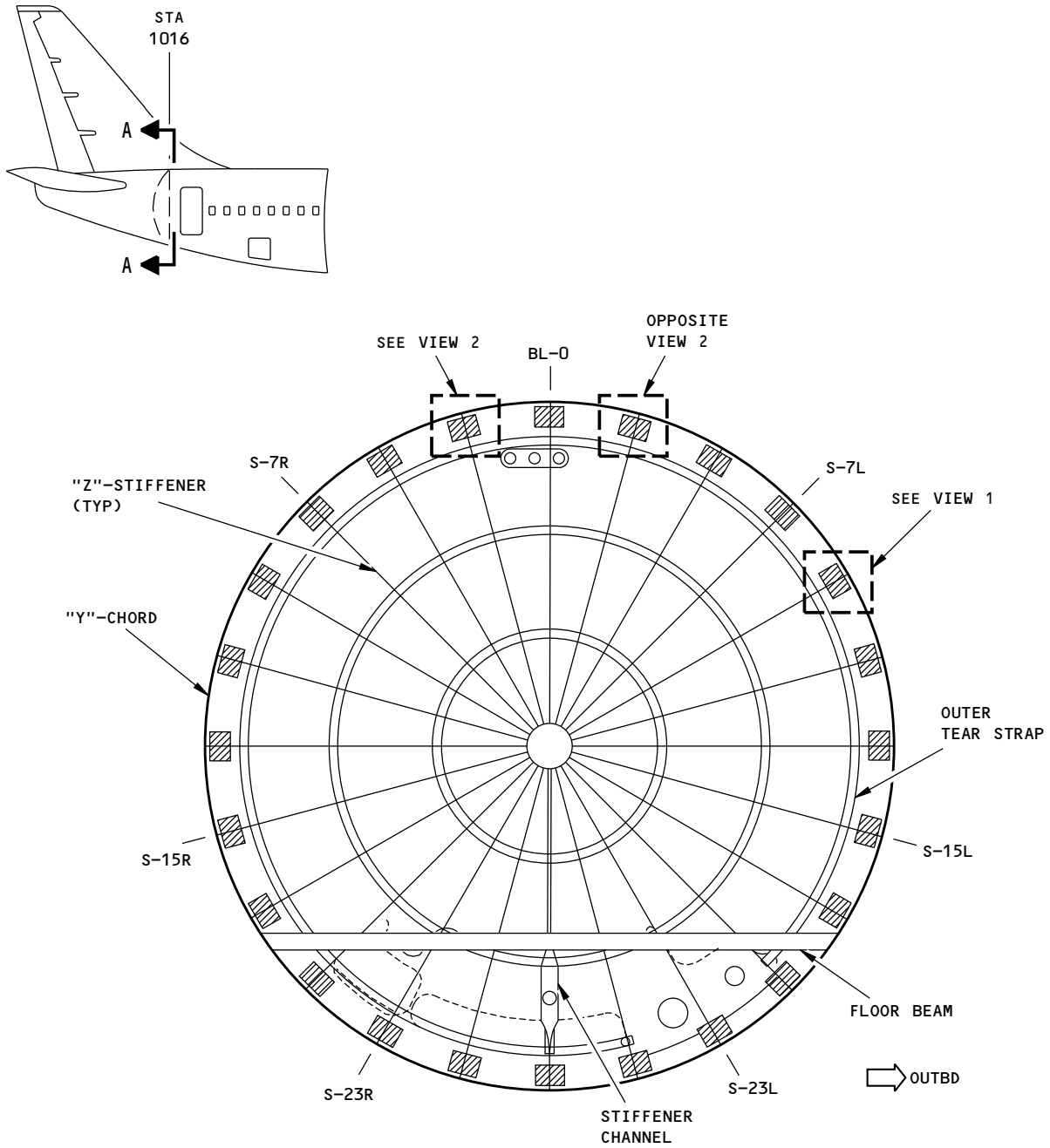

AFT PRESSURE BULKHEAD
VIEW AS YOU LOOK AFT

A-A

NOTES:

WEB INSPECTION AREAS

2159995 S0000472253_V1

BS 1016 Pressure Bulkhead - Web Inspection Areas
Figure 1 (Sheet 1 of 3)

BOEING PROPRIETARY - Copyright © Unpublished Work - See title page for details

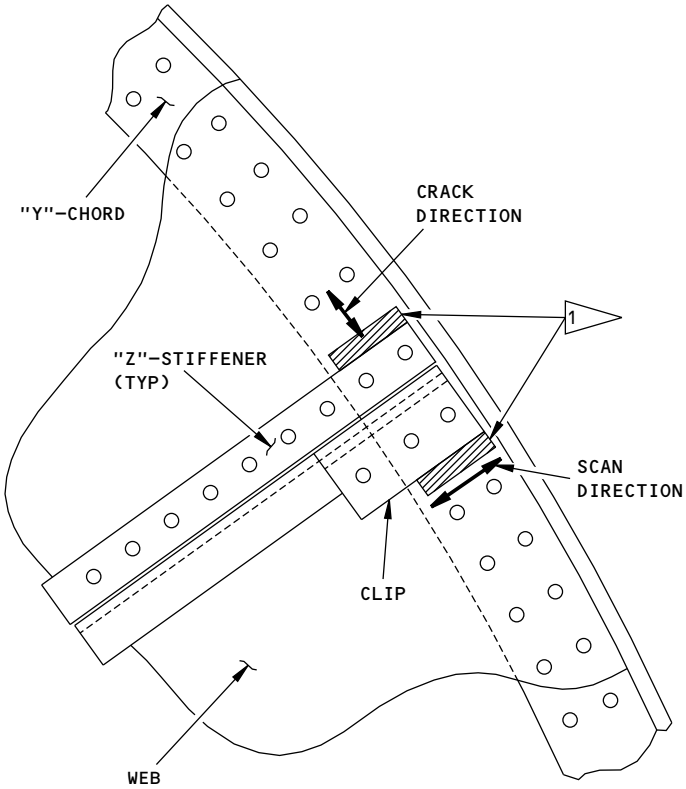

VIEW 1
WEB INSPECTION AREA

NOTES:

WEB INSPECTION AREAS

1 PUT THE PROBE TIP ON THE WEB AND DO A SURFACE SCAN ADJACENT TO THE "Z"-STIFFENER AND CLIP

2159997 S0000472254_V1

BS 1016 Pressure Bulkhead - Web Inspection Areas
Figure 1 (Sheet 2 of 3)

BOEING PROPRIETARY - Copyright © Unpublished Work - See title page for details

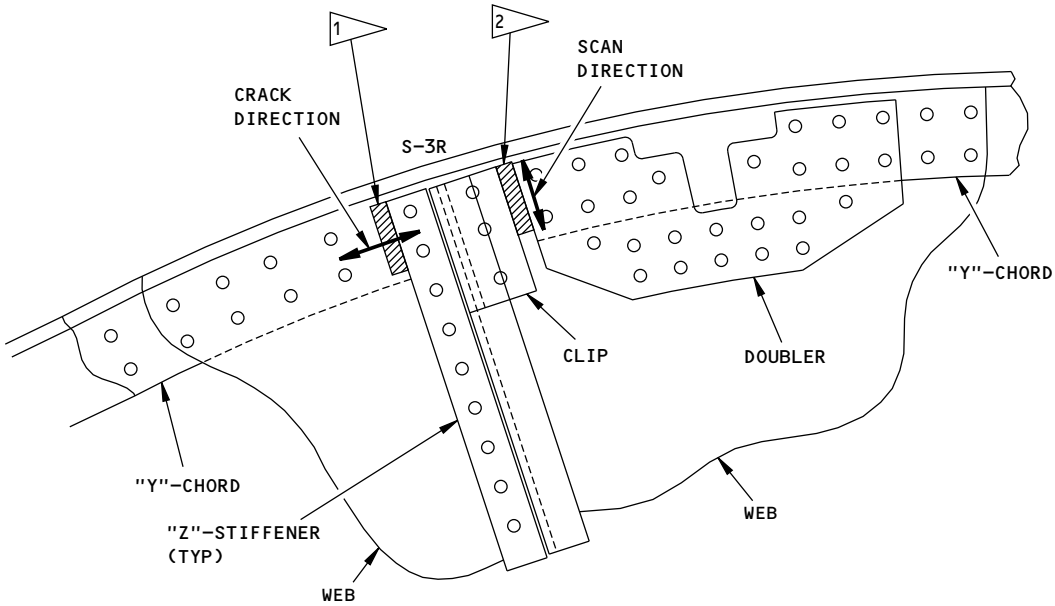

VIEW 2
WEB INSPECTION AREA NEAR A DOUBLER
S-3R SHOWN; THE LEFT SIDE IS ALMOST THE SAME

NOTES:

WEB INSPECTION AREAS

2 EXAMINE THE AREA BETWEEN THE CLIP AND THE DOUBLER IF THERE IS SUFFICIENT SPACE FOR THE PROBE.

2159998 S0000472255_V1

BS 1016 Pressure Bulkhead - Web Inspection Areas
Figure 1 (Sheet 3 of 3)

BOEING PROPRIETARY - Copyright © Unpublished Work - See title page for details

APEX AREA OF THE AFT PRESSURE BULKHEAD - BS 1016

1. Purpose

A. Use this procedure to do surface and subsurface inspections to find cracks in the production web or a web repair when a doubler is installed, of the aft pressure bulkhead at BS 1016, see Figure 1. For the inspection areas of the production web without a repair doubler, see Figure 2. For the inspection areas of the production web and replacement web and repair doubler, when a web repair doubler is installed as identified in Service Bulletin 737-53A1214, see Figure 3.

B. This procedure uses a shielded pencil probe to do the surface inspections and a shielded spot probe to do the subsurface inspections on the aft side of the aft pressure bulkhead.

C. Use the surface inspection to examine the inspection areas that follow:

(1) All the fastener locations identified in Figure 2 for the inspection of the production web (lap splice and stringer locations).

(2) The fastener locations identified in Figure 3 for the inspection of the web repair doubler.

(3) Along the outer edge of all the lap splices, for the inspection of the production web, see Figure 2.

(4) Around the outer edge of the repair doubler for the inspection of the production and replacement web, see Figure 3.

D. Use the subsurface inspection to examine the inspections that follow:

(1) The fastener locations identified in Figure 2 for the inspection of the production web at the lap splices only.

(2) The fastener locations identified in Figure 3 for inspection of the web below a 0.032 inch (0.81 mm) or a 0.040 inch (1.02 mm) repair doubler and at the doubler splice areas.

E. Service Bulletin Reference: 737-53A1214, 737-53-1251

2. Equipment

A. General

(1) Use inspection equipment that can be calibrated on the reference standard as specified in Paragraph 4.

(2) Refer to Part 1, 51-01-00, for data about the equipment manufacturers.

B. Instrument

(1) Use an eddy current instrument that:

(a) Has an impedance plane or a meter display.

(b) Operates at a frequency between 10 and 500 kHz.

(2) The instruments specified below were used to help prepare this procedure.

(a) Miz, 10A/B (Meter display); Zetec, Inc.

(b) Phasec 2200 (Impedance display); Hocking/Krautkramer

(c) Nortec 1000/2000 (Impedance display); Staveley, Inc.

(d) NDT 19e (Impedance display); Staveley, Inc.

C. Probes

BOEING PROPRIETARY - Copyright © Unpublished Work - See title page for details

(1) Probe to use for the surface inspections:

(a) Use a shielded, straight or right angle pencil probe with a maximum diameter of 0.13 inch (3.2 mm). Refer to Part 6, 51-00-00, Procedure 4, or Part 6, 51-00-00, Procedure 23, for data about probe selection.

(b) The probes specified below were used to help prepare this procedure.

1) MTF902-50B; NDT Engineering Corp.

2) MP-20; NDT Engineering Corp.

(2) Probe to use for the subsurface inspections:

(a) Use a spot probe with these properties:

NOTE: A reflection type probe is recommended.

1) With an end diameter of 0.25 inch (6.4 mm) to 0.27 inch (6.9 mm).

2) Operates at a frequency between 10 and 14 kHz.

3) Is straight or at a right angle.

(b) The probes specified below were used to help prepare this procedure.

NOTE: Probes different from those identified below can be used if they have the properties identified in Paragraph 2.C.(2)(a) above.

1) NEC-1087, 0.25 inch (6.4 mm) diameter; NDT Engineering

2) 9213550, SR/2KHz-200KHz/.25, 0.25 inch (6.4 mm) diameter; Staveley, Inc.

3) DP-270-SP, 0.27 inch (6.9 mm) diameter; Zetec, Inc.

D. Reference Standards

(1) For the surface inspections, use reference standard 126 and 188A or the equivalents. Refer to Part 6, 51-00-00, Procedure 4, or Part 6, 51-00-00, Procedure 23.

(2) For the subsurface inspections, use reference standard A389A. Refer to Part 6, 53-10-41, Figure 3 for data about the reference standard.

3. Prepare for the Inspection

A. Go through door 3701L to get access to the aft side of the BS 1016 pressure bulkhead.

CAUTION: DO NOT USE A METAL TOOL TO REMOVE SEALANT OR LOOSE MATERIAL. IT IS POSSIBLE FOR A METAL TOOL TO CAUSE DAMAGE TO THE STRUCTURE.

B. Clean the inspection areas. Remove sealant and loose material as necessary. Remove the corrosion inhibiting compound only if it is necessary.

4. Instrument Calibration

A. Calibrate the equipment for the surface inspection of the areas identified in Paragraph 1.C.(1) thru Paragraph 1.C.(4) as follows:

(1) Calibrate the equipment as specified in par. 5 “Instrument Calibration” of Part 6, 51-00-00, Procedure 4 (meter display instruments) or Part 6, 51-00-00, Procedure 23 (impedance plane display instruments).

(a) Use 188A or an equivalent and the aluminum rivet for the calibration of the inspection areas identified in Paragraph 1.C.(1) and Paragraph 1.C.(2).

(b) Use 126 or an equivalent for the calibration of the inspection areas identified in Paragraph 1.C.(3) and Paragraph 1.C.(4).

BOEING PROPRIETARY - Copyright © Unpublished Work - See title page for details

B. Calibrate the equipment for the subsurface inspection of the areas identified in Paragraph 1.D.(1) and Paragraph 1.D.(2) as follows:

(1) Set the instrument frequency as follows:

(a) To examine the inspection areas in Paragraph 1.D.(1) or Paragraph 1.D.(2) (with a 0.032 inch (0.81 mm) repair doubler installed), set the instrument frequency to 14 kHz.

(b) To examine the inspection areas in Paragraph 1.D.(2) (with a 0.040 inch (1.02 mm) repair doubler installed) set the instrument frequency to 10 kHz.

(2) Put the probe at probe position 1, on reference standard A389A, shown in Detail I in Figure 4, at the calibration location that follows:

(a) To examine the inspection areas in Paragraph 1.D.(1) or Paragraph 1.D.(2) (with a 0.032 inch (0.81 mm) repair doubler installed), use calibration location “A”.

(b) To examine the inspection areas in Paragraph 1.D.(2) (with a 0.040 inch (1.02 mm) repair doubler installed), use calibration location “D”.

(3) Balance the instrument.

(4) Set the lift-off as follows:

(a) If a meter display instrument is used: adjust the phase control so that the meter needle moves no more than 5 percent of full scale for probe-to-part distances of up to 0.006 inch (0.15 mm). This is the thickness of two sheets of paper (approximately).

(b) If an impedance plane instrument is used: adjust the phase control so that the lift-off signal moves horizontally to the left as shown in Detail III in Figure 4.

(5) Adjust the balance point to the position shown in Figure 4. See Detail II for the meter display and Detail III for the impedance plane display.

(6) Adjust the instrument sensitivity as follows:

(a) Put the probe at probe position 2 on the reference standard at the same location used in Paragraph 4.B.(2), above the notch to get a maximum signal. See Detail I in Figure 4.

(b) If a meter instrument is used:

1) Adjust the instrument sensitivity to get a notch signal that is 70 percent of full scale (50 percent of full scale higher than the balance point). See Detail II in Figure 4.

(c) If an impedance plane instrument is used:

1) Adjust the instrument sensitivity to put the notch signal at 70 percent of full screen height (50 percent higher than the balance point). See Detail III in Figure 4.

NOTE: Use a higher vertical gain than the horizontal gain to give a more satisfactory vertical signal, approximately 2 to 1 vertical/horizontal gain ratio.

(7) Move the probe around the fastener and in the direction of the reference standard’s edge until a signal from the edge starts to show. Identify the distance the probe is from the edge; this will be the maximum scan distance around the fastener that you will use during the inspection.

5. Inspection Procedure

A. To examine the apex area of the production aft pressure bulkhead web.

(1) Do a surface inspection of the areas identified in Paragraph 1.C.(1) as follows:

(a) Calibrate the instrument as specified in Paragraph 4.A. Use reference standard 188A.

(b) Put the pencil probe on the web surface, adjacent to the fastener head and away from an edge.

BOEING PROPRIETARY - Copyright © Unpublished Work - See title page for details

(c) Balance the instrument.

(d) Make a complete scan around all the fastener heads identified in Detail I in Figure 2 to examine the web for cracks that come from the fastener hole. Keep the probe adjacent to the head of the fastener during the complete scan inspection.

(e) Monitor the instrument display during the scan inspections for crack like signals to occur.

(2) Do a surface inspection of the areas identified in Paragraph 1.C.(3) as follows:

(a) Calibrate the instrument as specified in Paragraph 4.A. Use reference standard 126.

(b) Put the pencil probe on the web surface, adjacent to the outer edge of the aft web section. See View A in Figure 2 that shows the typical inspection area.

(c) Balance the instrument.

(d) Make a scan on the forward web section of all the seven lap splice locations. Keep the probe adjacent to the outer edge of aft web section during the scan, to examine the forward web for cracks. Make a 6 inch (152 mm) long scan that starts at the edge nearest the center of the apex, use the edge of the aft web section as a guide. See Figure 2.

(e) Monitor the instrument display during the scan inspections for crack like signals to occur.

(3) Do a subsurface inspection of the areas identified in Paragraph 1.D.(1) as follows:

(a) Calibrate the instrument as specified in Paragraph 4.B.

(b) Put the probe on the web surface, adjacent to the fastener head and away from all the outer (surface) and inner (subsurface) edges of the lap splice.

(c) Balance the instrument.

(d) Make a scan around each fastener head as follows:

1) To examine the fastener locations near the outer (surface) edge of the lap splice, move the probe to the maximum scan distance identified during calibration (see Paragraph 4.B.(7)) or as much as possible, to an adjacent fastener. See Figure 2, flagnote 2.

2) To examine the fastener locations near the inner (subsurface) edge of the lap splice, move the probe to the centerline of the row of fasteners when possible. Be careful not to move the probe too far around the fastener head. See Figure 2, flagnote 3.

(e) Monitor the instrument display during the scan inspections for crack like signals to occur.

B. To examine the apex area of the aft pressure bulkhead web, when a repair doubler is installed.

(1) Do a surface inspection of the areas identified in Paragraph 1.C.(2) as follows:

(a) Calibrate the instrument as specified in Paragraph 4.A. Use reference standard 188A.

(b) Put the pencil probe on the repair doubler, adjacent to the fastener head and away from an edge.

(c) Balance the instrument.

(d) Make a complete scan around the fastener heads identified in Detail I in Figure 3 to examine the repair doubler for cracks that come from the fastener hole. Keep the probe adjacent to the head of the fastener during the complete scan inspection.

(e) Monitor the instrument display during the scan inspections for crack like signals to occur.

(2) Do a surface inspection of the areas identified in Paragraph 1.C.(4) as follows:

(a) Calibrate the instrument as specified in Paragraph 4.A. Use reference standard 126.

(b) Put the pencil probe on the web, adjacent to the repair doubler. See View A in Figure 3 for the typical inspection area.

BOEING PROPRIETARY - Copyright © Unpublished Work - See title page for details

(c) Balance the instrument.

(d) Make a scan around to outer edge of the repair doubler, with the probe adjacent to the outer edge during the scan inspection. See View A in Figure 3.

(e) Monitor the instrument display during the scan inspections for crack like signals to occur.

(3) Do a subsurface inspection of the areas identified in Paragraph 1.D.(2) as follows:

(a) Calibrate the instrument as specified in Paragraph 4.B.

(b) Put the probe on the repair doubler surface, adjacent to the fastener head and away from all outer (surface) and inner (subsurface) edges of the repair doubler or lap splice.

(c) Balance the instrument.

(d) Make a scan around each fastener head as follows:

1) To examine the fastener locations near the outer (surface) edge of the repair doubler, move the probe to the maximum scan distance identified during calibration (see Paragraph 4.B.(7)) or as much as possible. See Figure 3, flagnote 1 for a typical scan at all fastener locations that are away from a subsurface edge. See flagnote 2 for the typical scan for fastener locations near a subsurface edge.

2) To examine the fastener locations near the inner (subsurface) edge of the lap splice/repair doubler and the web trim line, move the probe to the centerline of the row of fasteners. Be careful not to move the probe too far around the fastener head. See Figure 3, flagnote 3.

(e) Monitor the instrument display during the scan inspections for crack like signals to occur.

6. Inspection Results

A. Inspection results for meter display instruments:

(1) An upscale needle movement that is 40% or more of full scale (20% higher than the balance position) is a possible crack signal. A crack signal occurs during a short scan.

B. Inspection results for impedance plane display instruments:

(1) Vertical signals that are 40% or more of full screen height (20% higher than the balance point) are possible crack signals. A crack signal occurs during a short scan.

C. A slow upscale needle movement from the meter display instrument or a slow vertical indication from the impedance plane display instrument can be caused by separation between layers. This type of indication will occur during a longer scan than a crack indication. Compare the signals you get during the inspection to the signals you got from the reference standard during calibration.

D. Make sure an indication that occurs during the inspection is not caused by the edge of the surface layer or subsurface layer.

E. To make sure you have a crack, you can do a high frequency eddy current inspection as specified in Part 6, 51-00-00, Procedure 4, or Part 6, 51-00-00, Procedure 23, from the forward side of the BS 1016 Pressure Bulkhead at the location of the crack indication.

BOEING PROPRIETARY - Copyright © Unpublished Work - See title page for details

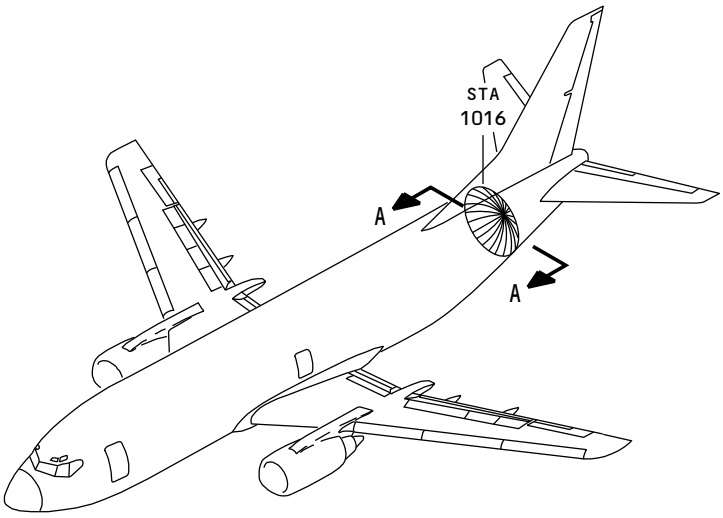

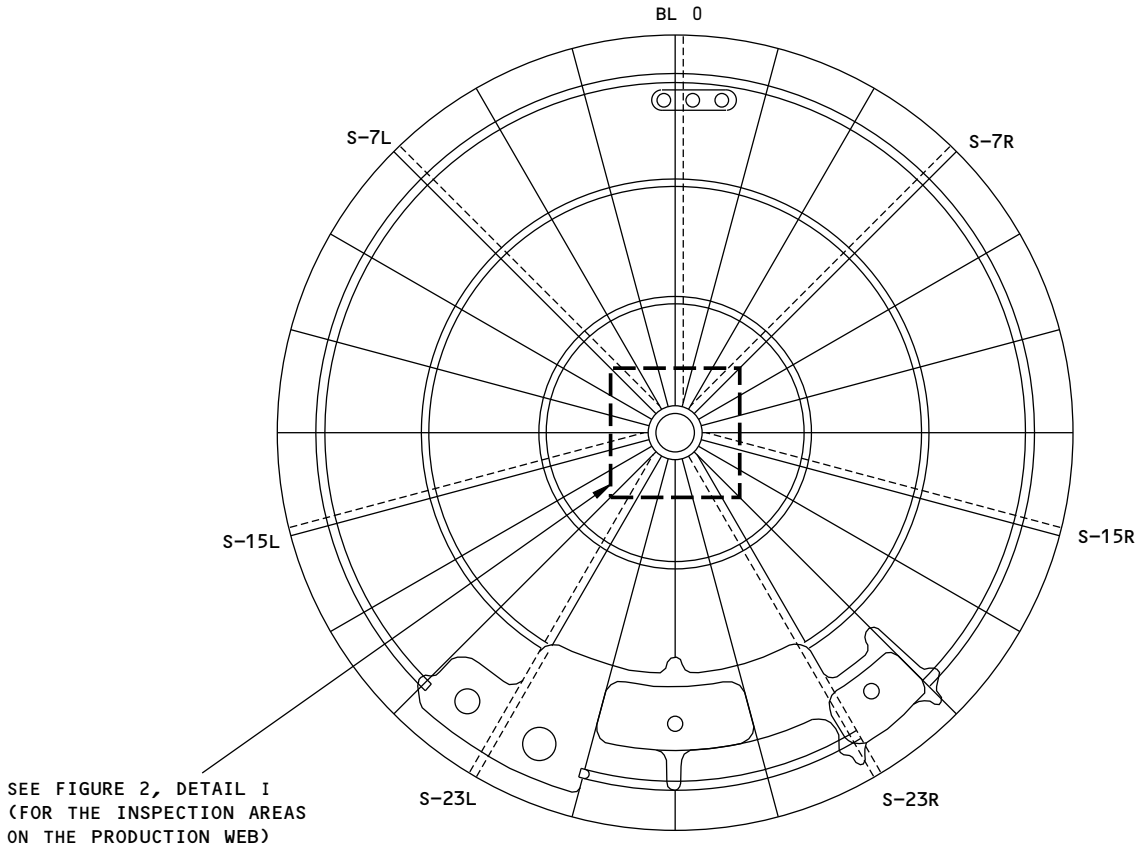

2159999 S0000472264_V2

Apex Area of Aft Pressure Bulkhead - BS 1016
Figure 1

BOEING PROPRIETARY - Copyright © Unpublished Work - See title page for details

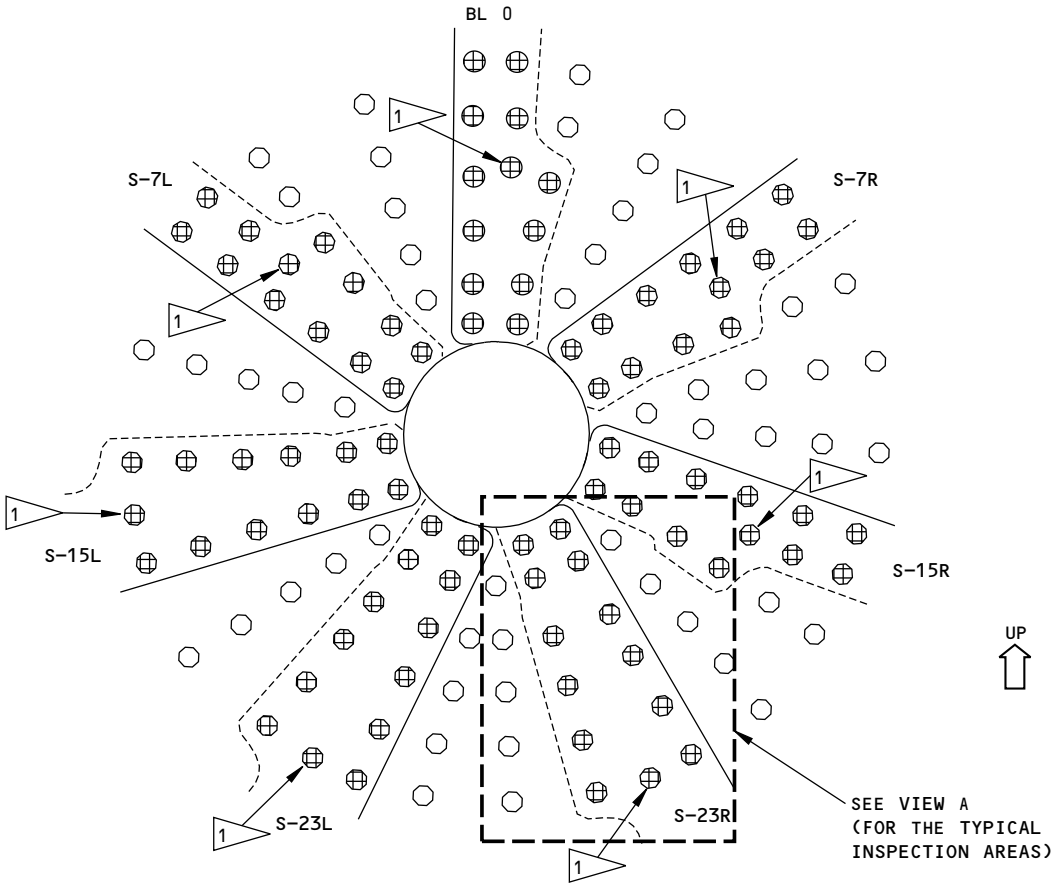

APEX AREA OF THE PRODUCTION
AFT PRESSURE BULKHEAD WEB
DETAIL I

NOTES:

○ FASTENER LOCATION TO DO A SURFACE INSPECTION ONLY, AS SPECIFIED IN PAR. 5.A.(1).

⊕ FASTENER LOCATION TO DO A SURFACE INSPECTION AS SPECIFIED IN PAR. 5.A.(1) AND A SUBSURFACE INSPECTION AS SPECIFIED IN PAR. 5.A.(3).

1 FASTENER LOCATION THAT IS NOT IN ALL AFT PRESSURE BULKHEAD CONFIGURATIONS.

2 TYPICAL SCAN AROUND THE FASTENER HEAD NEAR THE OUTER (SURFACE) EDGE OF THE AFT WEB SECTION, USE THE FASTENER HEAD AS A GUIDE FOR THE PROBE. IT IS POSSIBLE THAT A COMPLETE SCAN CANNOT BE MADE DUE TO AN ADJACENT FASTENER.

3 TYPICAL SCAN AROUND THE SIDE OF THE FASTENER HEAD OPPOSITE THE INNER (SUBSURFACE) EDGE OF THE FORWARD WEB SECTION, USE THE FASTENER HEAD AS A GUIDE FOR THE PROBE. STOP THE SCAN AT/OR APPROXIMATELY THE CENTER LINE OF THE ROW OF FASTENERS. IT IS POSSIBLE TO GET A SIGNAL FROM THE SUBSURFACE EDGE, IF THE SPOT PROBE IS SCANNED TOO FAR AROUND THE FASTENER HEAD TOWARDS THE EDGE.

2160001 S0000472265_V1

Inspection Areas of the Production Web
Figure 2 (Sheet 1 of 2)

BOEING PROPRIETARY - Copyright © Unpublished Work - See title page for details

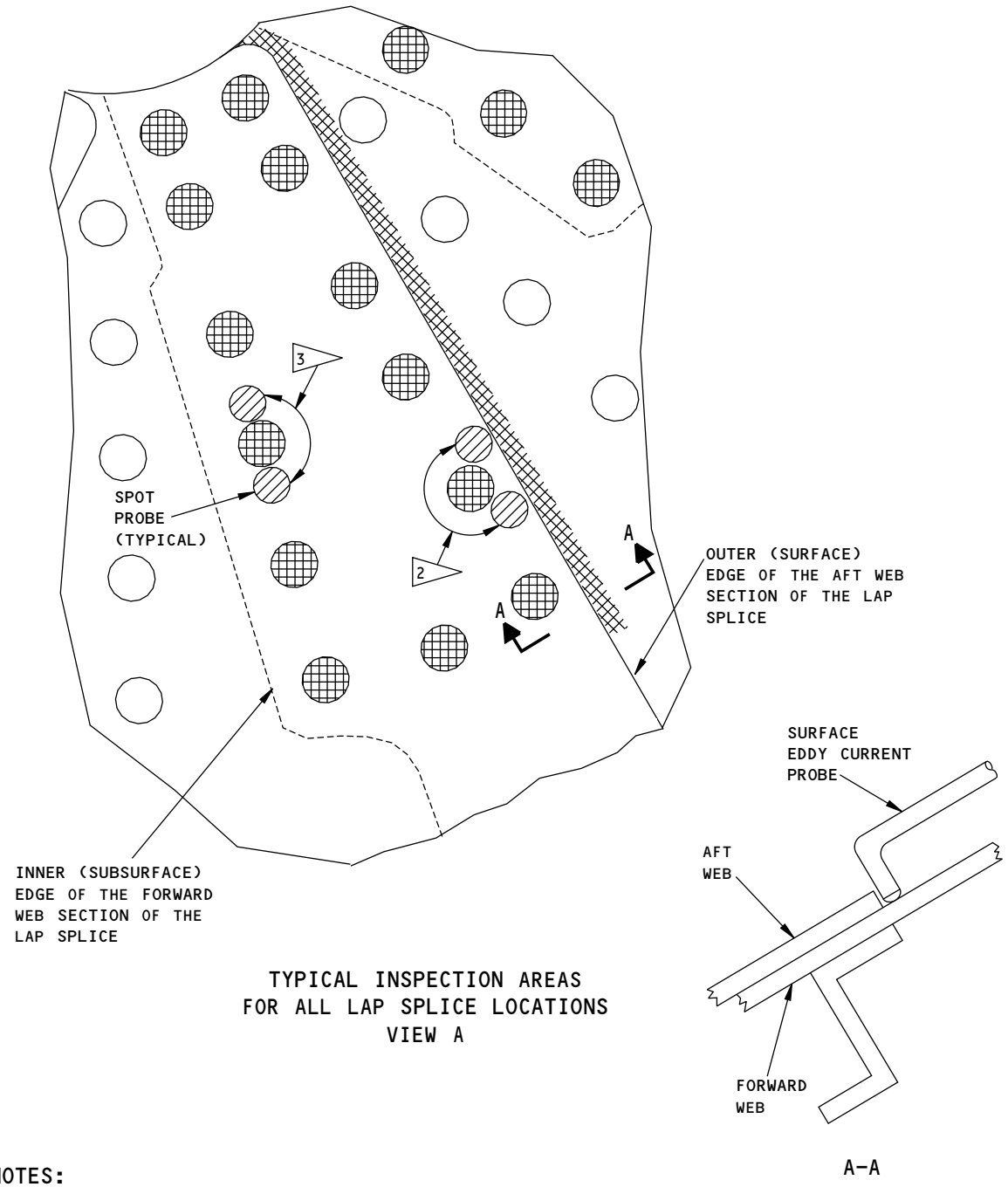

TYPICAL INSPECTION AREAS
FOR ALL LAP SPLICE LOCATIONS
VIEW A

A-A

NOTES:

INSPECTION AREA TO DO A SURFACE INSPECTION ON THE FORWARD MOST WEB SECTION OF THE LAP SPLICE, ADJACENT TO THE OUTER EDGE OF THE AFT WEB SECTION, AS SPECIFIED IN PAR. 5.A.(2). THE INSPECTION AREA STARTS FROM THE EDGE NEAR THE CENTER OF THE APEX, OUT RADIALLY 6 INCHES (152 MM).

SPOT PROBE

2160002 S0000472266_V1

Inspection Areas of the Production Web
Figure 2 (Sheet 2 of 2)

BOEING PROPRIETARY - Copyright © Unpublished Work - See title page for details

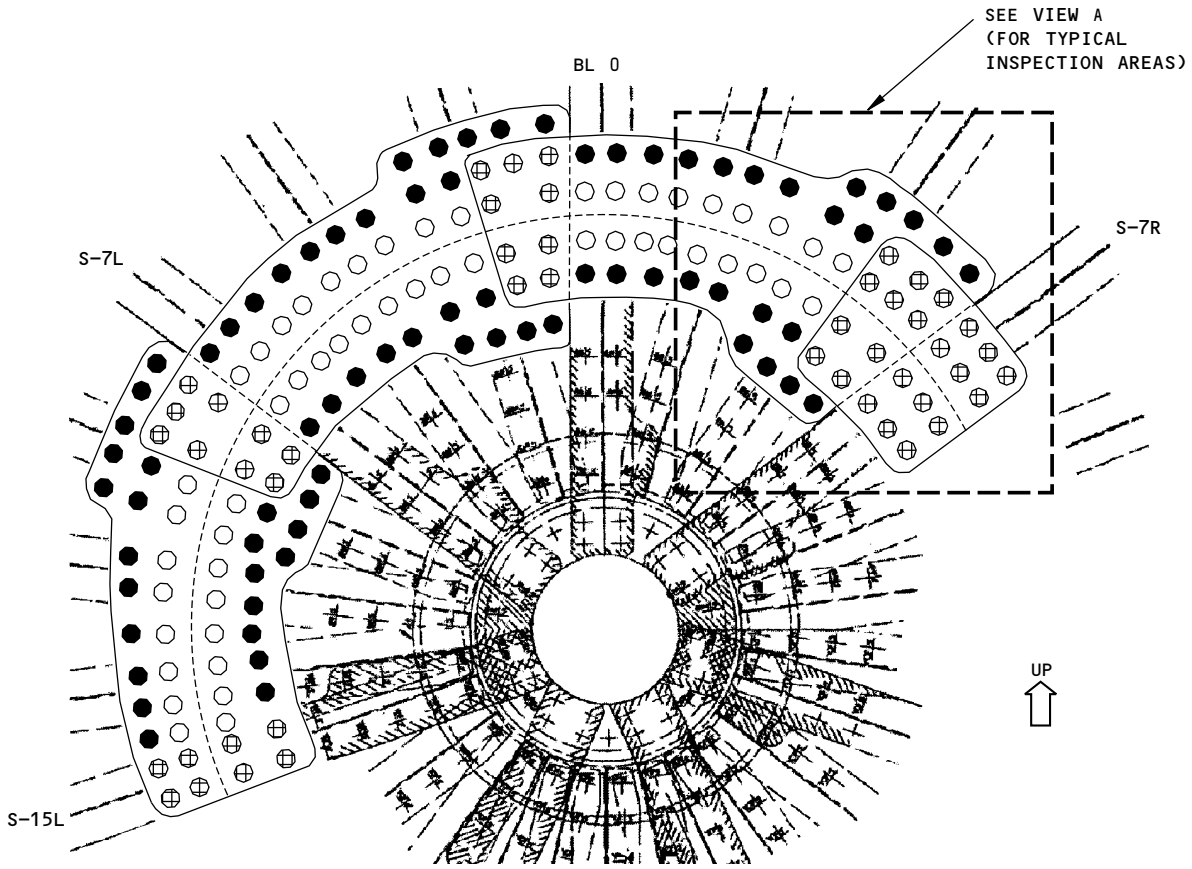

APEX AREA OF THE AFT PRESSURE BULKHEAD
WITH A REPAIR DOUBLER INSTALLED AS IDENTIFIED
IN SERVICE BULLETIN 737-53A1214
DETAIL I

2160007 S0000472267_V1

Inspection Areas when a Web Repair Doubler is Installed as specified in Service Bulletin 737-53A1214
Figure 3 (Sheet 1 of 3)

BOEING PROPRIETARY - Copyright © Unpublished Work - See title page for details

NOTES:

- THE FASTENER PATTERN SHOWN IN DETAIL I IS FOR A TYPICAL REPAIR, THE NUMBER OF FASTENERS SHOWN CAN BE DIFFERENT THAN THAT ON THE AIRPLANE.

○ FASTENER LOCATION TO DO A SURFACE INSPECTION ONLY OF THE REPAIR DOUBLER AS SPECIFIED IN PAR. 5.B.(1).

● FASTENER LOCATION TO DO A SUBSURFACE INSPECTION OF THE WEB ONLY AS SPECIFIED IN PAR. 5.B.(3).

⊕ FASTENER LOCATION TO DO A SURFACE INSPECTION AS SPECIFIED IN PAR. 5.B.(1) AND A SUBSURFACE INSPECTION AS SPECIFIED IN PAR. 5.B.(3).

1 TYPICAL SCAN AROUND THE FASTENER HEAD NEAR THE OUTER EDGE OF THE REPAIR DOUBLER. USE THE FASTENER HEAD AS A GUIDE FOR THE PROBE. IT IS POSSIBLE THAT A COMPLETE SCAN CANNOT BE MADE DUE TO AN ADJACENT FASTENER.

2 TYPICAL SCAN AROUND THE FASTENER HEAD NEAR THE OUTER EDGE OF THE REPAIR DOUBLER AND A SUBSURFACE EDGE OF THE AFT WEB SECTION OF THE LAP SPLICE. USE THE FASTENER HEAD AS A GUIDE FOR THE PROBE. STOP THE SCAN AT/OR APPROXIMATELY THE CENTER LINE OF THE ROW OF FASTENERS NEAR THE SUBSURFACE EDGE. IT IS POSSIBLE TO GET A SIGNAL FROM THE SUBSURFACE EDGE, IF THE SPOT PROBE IS SCANNED TOO FAR AROUND THE FASTENER HEAD TOWARDS THE EDGE.

3 TYPICAL SCAN AROUND THE FASTENER HEAD THAT IS NEAR A SUBSURFACE EDGE OF THE WEB LAP SPLICE AND TRIM LINE. USE THE FASTENER HEAD AS A GUIDE FOR THE PROBE. STOP THE SCAN AT/OR APPROXIMATELY THE CENTER LINE OF THE ROW OF FASTENERS. IT IS POSSIBLE TO GET A SIGNAL FROM THE SUBSURFACE EDGE, IF THE SPOT PROBE IS SCANNED TOO FAR AROUND THE FASTENER HEAD TOWARDS THE EDGE.

2160008 S0000472268_V1

Inspection Areas when a Web Repair Doubler is Installed as specified in Service Bulletin 737-53A1214
Figure 3 (Sheet 2 of 3)

BOEING PROPRIETARY - Copyright © Unpublished Work - See title page for details

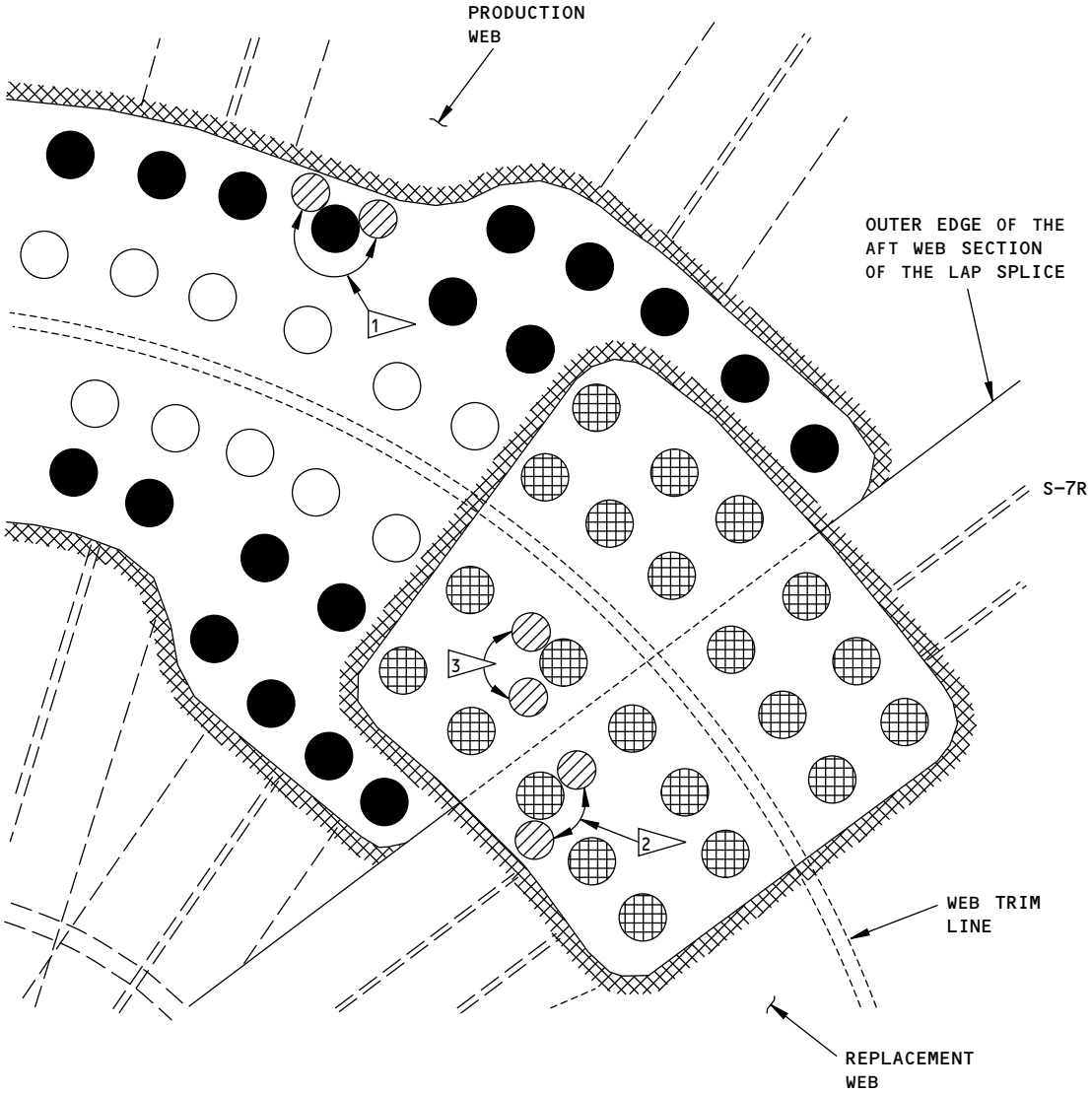

TYPICAL INSPECTION AREAS FOR
ALL REPAIR DOUBLERS
VIEW A

NOTES:

INSPECTION AREA TO DO A SURFACE INSPECTION ON THE WEB AND REPAIR DOUBLER, AROUND THE OUTER EDGE OF THE REPAIR DOUBLER AS SPECIFIED IN PAR. 5.B.(2).

EDDY CURRENT SPOT PROBE

2160010 S0000472269_V1

Inspection Areas when a Web Repair Doubler is Installed as specified in Service Bulletin 737-53A1214
Figure 3 (Sheet 3 of 3)

BOEING PROPRIETARY - Copyright © Unpublished Work - See title page for details

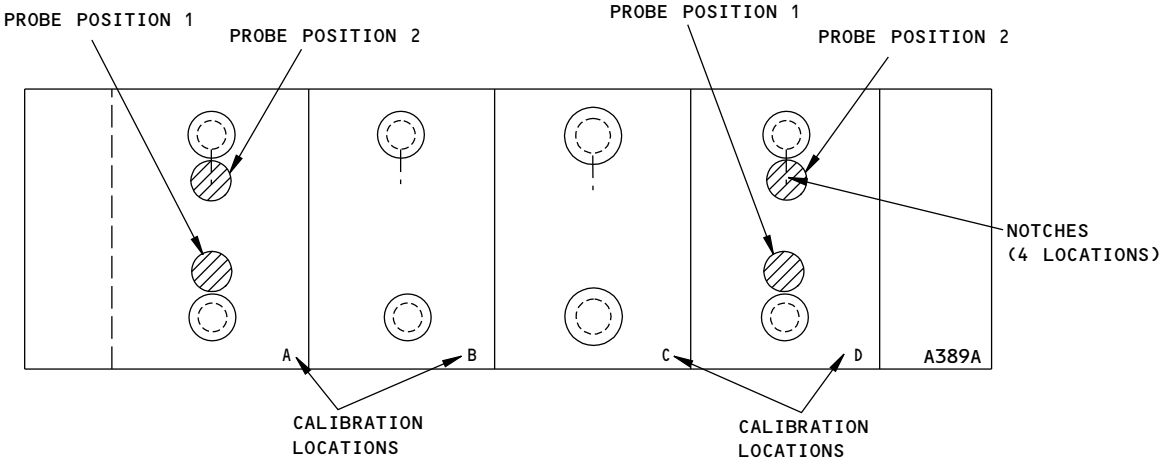

PROBE POSITIONS ON THE REFERENCE STANDARD
DETAIL I

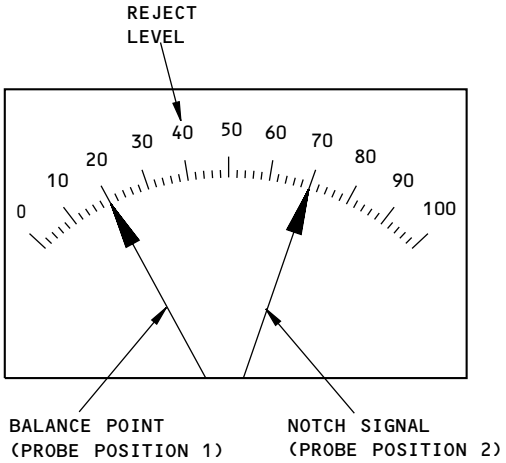

METER DISPLAY
DETAIL II

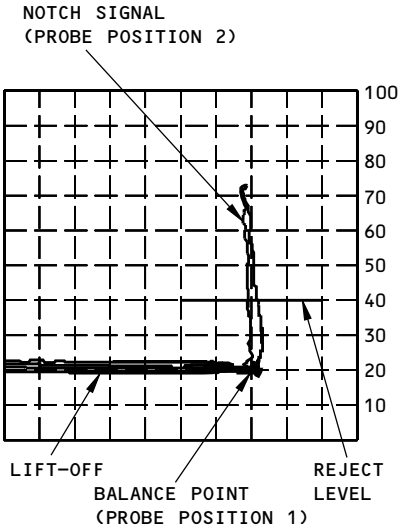

IMPEDANCE PLANE DISPLAY
DETAIL III

2160029 S0000472270_V1

Instrument Calibration
Figure 4

BOEING PROPRIETARY - Copyright © Unpublished Work - See title page for details

PART 6 - EDDY CURRENT

STRAPS AT THE FORWARD AND AFT CARGO DOOR CUTOUTS

1. Purpose

A. Use this procedure to examine the straps at the forward and aft cargo door cutouts for cracks. A subsurface inspection through the skin is done with a spot probe to find cracks in the straps. A surface inspection is done with a surface probe to find cracks in the strap at the corners of the door cutouts. See Figure 1 for the inspection areas.

B. The probe scans with the spot probe are done in a vertical direction along the edges of the fasteners. Also, probe scans are done along the edge of the door cutouts. See Figure 1 for the subsurface probe scans.

C. The probe scans with the surface probe are done on the strap edge at the corners of the door cutouts. See Figure 1 for the probe scans.

D. This procedure uses an impedance plane display instrument.

E. 737 Supplemental Structural Inspection Document (D6-82669) Reference:

(1) Item: F-10A

(2) Item: F-10C

(3) Item: F-11A

(4) Item: F-11C

2. Equipment

A. General

(1) Use inspection equipment that can be calibrated on the reference standards specified in Paragraph 2.D.

(2) Refer to Part 1, 51-01-00, for data about the equipment manufacturers.

B. Instrument

(1) Use an eddy current instrument that:

(a) Has an impedance plane display.

(b) Operates at a frequency between:

1) 800 Hz and 3 kHz for the subsurface inspection.

2) 200 kHz and 300 kHz for the surface inspection.

(2) The instruments that follow were used to help prepare this procedure.

(a) Phasec 2200; Hocking Krautkramer

(b) NDT 19e; Nortec-Staveley

(c) Nortec 1000S; Nortec-Staveley

C. Probes

(1) For the subsurface inspection away from the lap splices, use a spot probe that:

(a) Operates at a frequency between 2 and 3 kHz.

(b) Has a maximum external diameter of 0.36 inch (9.1 mm).

(c) Is shielded.

BOEING PROPRIETARY - Copyright © Unpublished Work - See title page for details

(d) Can be straight or a 90 degree probe.

(2) The probes that follow were used to help prepare this procedure for the subsurface inspection away from the lap splices.

(a) SPC-224; EC/NDT (use on reference standard NDT3071A).

(b) SPO-196-3; EC/NDT (use on reference standard NDT3071A).

(3) For the subsurface inspection at the lap splices, use a spot probe that:

(a) Operates at a frequency between 800 and 900 Hz.

(b) Has a maximum external diameter of 0.50 inch (12.7 mm).

(c) Is shielded.

(d) Can be straight or a 90 degree probe.

(4) The probes that follow were used to help prepare this procedure for the subsurface inspection at the lap splices.

(a) SPO-197-4; EC/NDT (use on reference standard NDT3071B).

(b) RS1005-2/TF; NDT Engineering Corp. (use on reference standard NDT3071B).

(5) For the surface inspection of the straps at the corners of the door cutouts, use a surface (pencil) probe that:

(a) Operates at a frequency between 200 kHz and 300 kHz.

(b) Has a maximum external diameter of 0.130 inch (3.3 mm).

(c) Is shielded.

(d) Can be straight or a 90 degree probe.

(6) The probes that follow were used to help prepare this procedure.

NOTE: Only one surface probe is necessary for the surface inspection.

(a) MTF902-40B; NDT Engineering Corp. (90 degree probe).

(b) MTF-30; NDT Engineering Corp. (straight probe).

D. Reference Standards

(1) For the subsurface inspection, make reference standard NDT3071. See Figure 2. This reference standard has two different thicknesses for two different calibrations. These different calibration areas are as follows:

(a) NDT3071A is used for the calibration to do the subsurface inspection away from the lap splices.

(b) NDT3071B is used for the calibration to do the subsurface inspection at the lap splice locations.

(2) For the surface inspection of the straps at the door corner cutouts, do the calibration on reference standard 189 or 126. See Part 6, 51-00-00, Procedure 23, Figure 4 and Figure 7, for data on these surface reference standards.

E. Special Tools

(1) Nonconductive straightedge. This is used as a probe guide during the subsurface probe scans along the edges of the fastener heads and along the edge of the door cutout. It is also used as a probe guide during the surface inspection at the door corner cutouts.

BOEING PROPRIETARY - Copyright © Unpublished Work - See title page for details

3. **Prepare for the Inspection**

   A. Make sure the skin areas that the subsurface probe will touch during the scan are clean at the cargo door cutouts. See Figure 1 for these scan areas. The scan areas are adjacent to the fasteners identified as “A” and “B”.

   B. Make sure the edges of the straps are clean in the door cutout corners where the surface probe will touch the straps. See Figure 1 for the surface scan areas at the door cutout corners.

4. **Instrument Calibration**

   A. Calibrate the instrument for the subsurface inspection of the straps away from the lap splices as follows:

      (1) Set the instrument frequency between 2 and 3 kHz.

      (2) If the inspection area is painted, put a shim that is nonconductive on top of the reference standard. Use a shim that is approximately 0.006 inch (0.15 mm) thick.

      (3) Put the edge of the straightedge along the left edge of the middle row of fasteners on NDT3071A. Use double faced tape to keep the straightedge attached to the reference standard. See Figure 3.

      (4) Put the probe on reference standard NDT3071A at probe position 1 away from the reference notch. See Figure 3.

      (5) Balance the instrument.

      (6) Set the balance point at 20 percent of full screen height as shown in Figure 3.

      (7) Adjust the phase control so that the lift-off signal moves horizontally to the left as shown in Figure 3.

      (8) Move the probe across the EDM notch at probe position 2 and stop the probe at probe position 3. Monitor the screen display for the notch signal. See Figure 3 for the probe scans and screen display.

      (9) Adjust the gain to get a signal that is 80 percent of full screen height when the scan in Paragraph 4.A.(8) is done again. It is acceptable to use a vertical to horizontal gain ratio of 2 to 1 to keep the screen display dot more stable during the scan. See Figure 3 for the calibration signals.

   B. Calibrate the instrument for the subsurface inspection of the straps at the lap splices.

      (1) Set the instrument frequency between 800 and 900 Hz.

      (2) Do Paragraph 4.A.(2) thru Paragraph 4.A.(9) but this time use reference standard NDT3071B for the calibration. Probe positions 1, 2 and 3 are adjacent to the EDM notch in reference standard NDT3071B.

   C. Calibrate the instrument for the surface inspection of the straps at the corners of the door cutouts.

      (1) Do the calibration as specified in Part 6, 51-00-00, Procedure 23. Use reference standard 189. Use a nonconductive straightedge during the calibration because a straightedge will be used during the inspection as shown in Figure 1.

5. **Inspection Procedure**

   A. Subsurface inspection procedure for cracks in the straps away from the lap splices.

      (1) Calibrate the instrument as specified in Paragraph 4.A. Use a spot probe with a maximum diameter of 0.36 inch (9.1 mm).

      (2) Put the straightedge along the edges of the “A” fasteners in the inspection area as shown in View A in Figure 1.

BOEING PROPRIETARY - Copyright © Unpublished Work - See title page for details

(3) Put the probe along the edge of the straightedge in the inspection area away from a fastener.

(4) Balance the instrument.

(5) Do vertical scans along the edges of the “A” fasteners in rows 1, 2 and 3. See Figure 1.

(6) Put the straightedge on the edge of the door cutout as shown in View A in Figure 1.

(7) Put the probe along the straightedge (row 4) as shown in View A in Figure 1. The straightedge will help keep the probe constantly along the edge of the skin during the scan.

(8) Balance the instrument.

(9) Do a vertical scan along the edge of the skin in row 4 as shown in View A in Figure 1. Keep the probe along the straightedge during the scan.

(10) Do Paragraph 5.A.(2) thru Paragraph 5.A.(9) on the aft and forward sides of the forward and aft cargo doors. See Figure 1 for these inspection areas.

B. Subsurface inspection procedure for cracks in the straps at lap splice locations.

(1) Calibrate the instrument as specified in Paragraph 4.B. Use a spot probe with a maximum diameter of 0.50 inch (12.7 mm).

(2) Put the straightedge along the edges of the “B” fasteners in the inspection area as shown in View A in Figure 1. All of the “B” fasteners are at the lap splice locations.

NOTE: It is possible that a probe scan cannot be done on the side of the fastener nearest the skin edge. It is acceptable not to scan this area if there is not sufficient clearance for the probe in this area.

(3) Put the probe along the edge of the straightedge in the inspection area away from a fastener.

(4) Balance the instrument.

(5) Do vertical scans along the edges of the “B” fasteners in the lap splices. When the scan is done in a down direction, stop the probe when it is adjacent to the fasteners in the lowest row. This is done because if the probe goes near the upper skin edge, a crack indication can occur from the edge effect.

NOTE: It can be necessary to adjust the position of the straightedge during the inspection if the fasteners are not aligned.

(6) Do Paragraph 5.B.(2) thru Paragraph 5.B.(5) on the aft and forward sides of the forward and aft cargo doors. See Figure 1 for these inspection areas.

C. Surface inspection procedure for the strap edges at the corners of the door cutouts.

(1) Do the calibration as specified in Paragraph 4.C.

(2) Put a straightedge on the inner side of the strap so that some of the straightedge goes beyond the edge of the strap. See View A in Figure 1 for the straightedge position.

(3) Put the surface probe on the strap edge and against the straightedge. See View A in Figure 1.

(4) Balance the instrument.

(5) Do a scan on the edge of the strap in the corners of the door cutouts as shown in View A in Figure 1. Keep the probe against the straightedge during the scans.

NOTE: It will be necessary to change the position of the straightedge to make sure all of the inspection area is examined in the cutout corners.

BOEING PROPRIETARY - Copyright © Unpublished Work - See title page for details

(6) Make sure all of the strap edges at the corners in the aft and forward cargo door cutouts are examined.

6. Inspection Results

A. Inspection results for the subsurface inspection away from the lap splices.

(1) Signals that are 40 percent (or more) of full screen height are signs of possible cracks. See Figure 3.

(2) Compare the signals that occur during the inspection with the signals that you got from the reference standard during calibration. See Figure 3.

(3) Make sure that a crack type signal is not the edge effect from a fastener edge or a skin edge.

(4) To make sure of the results, do the fastener hole inspection that is specified in Part 6, 51-00-00, Procedure 16.

B. Inspection results for the subsurface inspection at the lap splices.

(1) See Paragraph 6.A. for the inspection results.

(2) Make sure that the crack signal is not because the probe is near the edge of the upper skin on the lap splice. Use reference standard NDT3071B to see where the probe is when the edge effect signal occurs from the upper edge of the reference standard. Compare this to the signal that you got when the probe was near the edge of the skin on the lap splice.

(3) Make sure that the crack signal is not because the probe scanned across the subsurface edge of the lower skin at the lap splices. A probe scan from the lap splice to the edge of the subsurface skin edge will give a crack indication. See View A in Figure 1 for more data on the subsurface edge of the lower skin.

C. Inspection results for the surface inspection of the strap at the corners of the door cutouts.

(1) Refer to Part 6, 51-00-00, Procedure 23, paragraph 7 for instructions to help make an analysis of the inspection results.

BOEING PROPRIETARY - Copyright © Unpublished Work - See title page for details

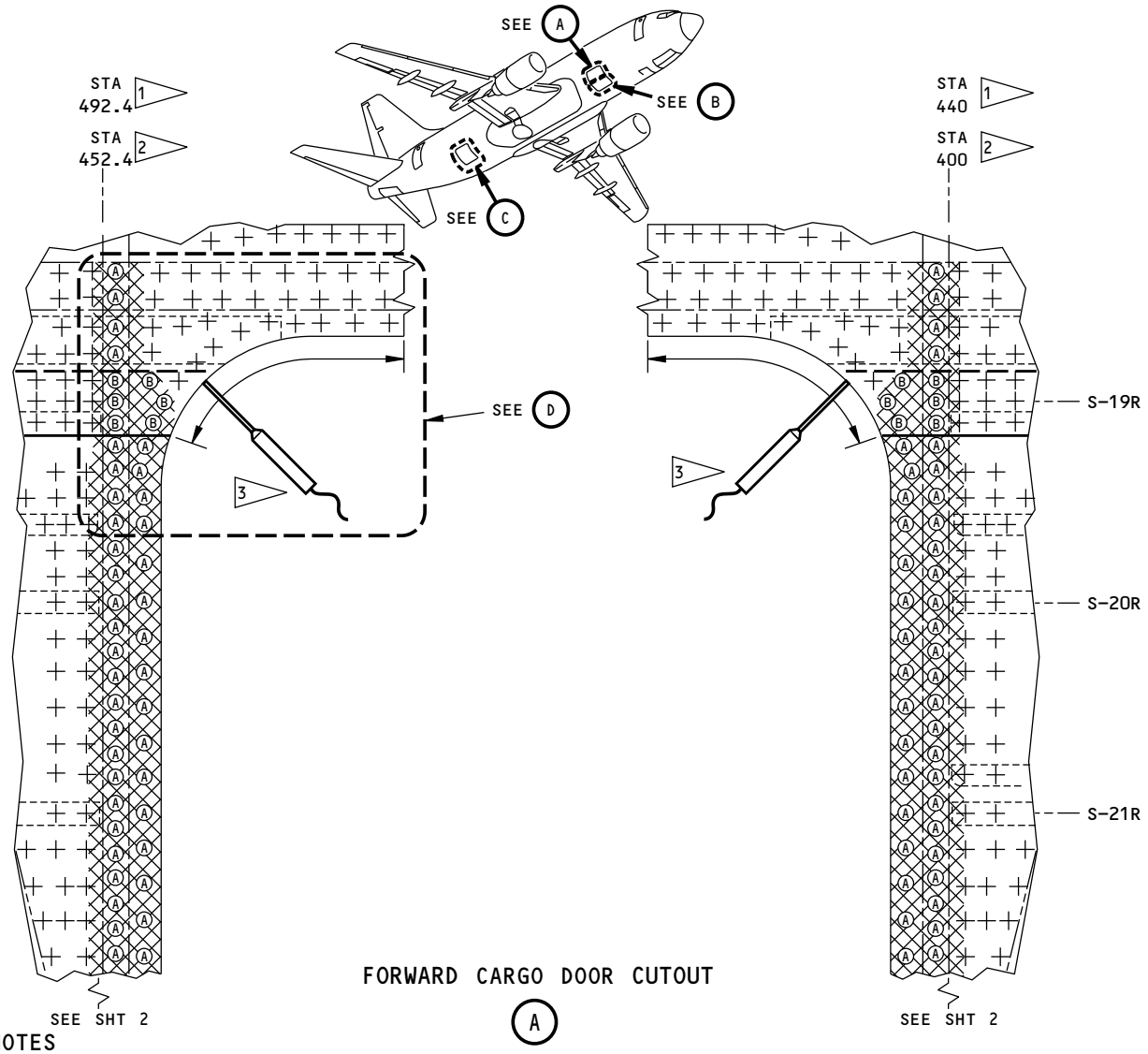

NOTES

INSPECTION AREA WITH A SUBSURFACE SPOT PROBE. DO VERTICAL SCANS AS SHOWN IN FIGURE 1 (SHEET 4).

1 FOR 737-300,-400

2 FOR 737-500

3 DO THE CALIBRATION SHOWN IN PART 6, 51-00-00, PROCEDURE 23 TO DO THE SURFACE EDDY CURRENT INSPECTION OF THE STRAP EDGE AT THESE 4 LOCATIONS. USE REFERENCE STANDARD 189 DURING THE CALIBRATION.

4 FOR 737-300,-400,-500

Ⓐ = DO THE CALIBRATION ON NDT3071A TO DO THE VERTICAL SCANS ALONG THE EDGE OF THESE FASTENERS. SEE FIGURE 1 (SHEET 4) FOR MORE DATA ON THE PROBE SCANS.

Ⓑ = DO THE CALIBRATION ON NDT3071B TO DO THE VERTICAL SCANS ALONG THE EDGE OF THESE FASTENERS. THESE FASTENERS ARE FOUND AT THE LAP SPLICES.

2160033 S0000472272_V2

Inspection Locations at the Forward and Aft Cargo Door Cutouts
Figure 1 (Sheet 1 of 4)

BOEING PROPRIETARY - Copyright © Unpublished Work - See title page for details

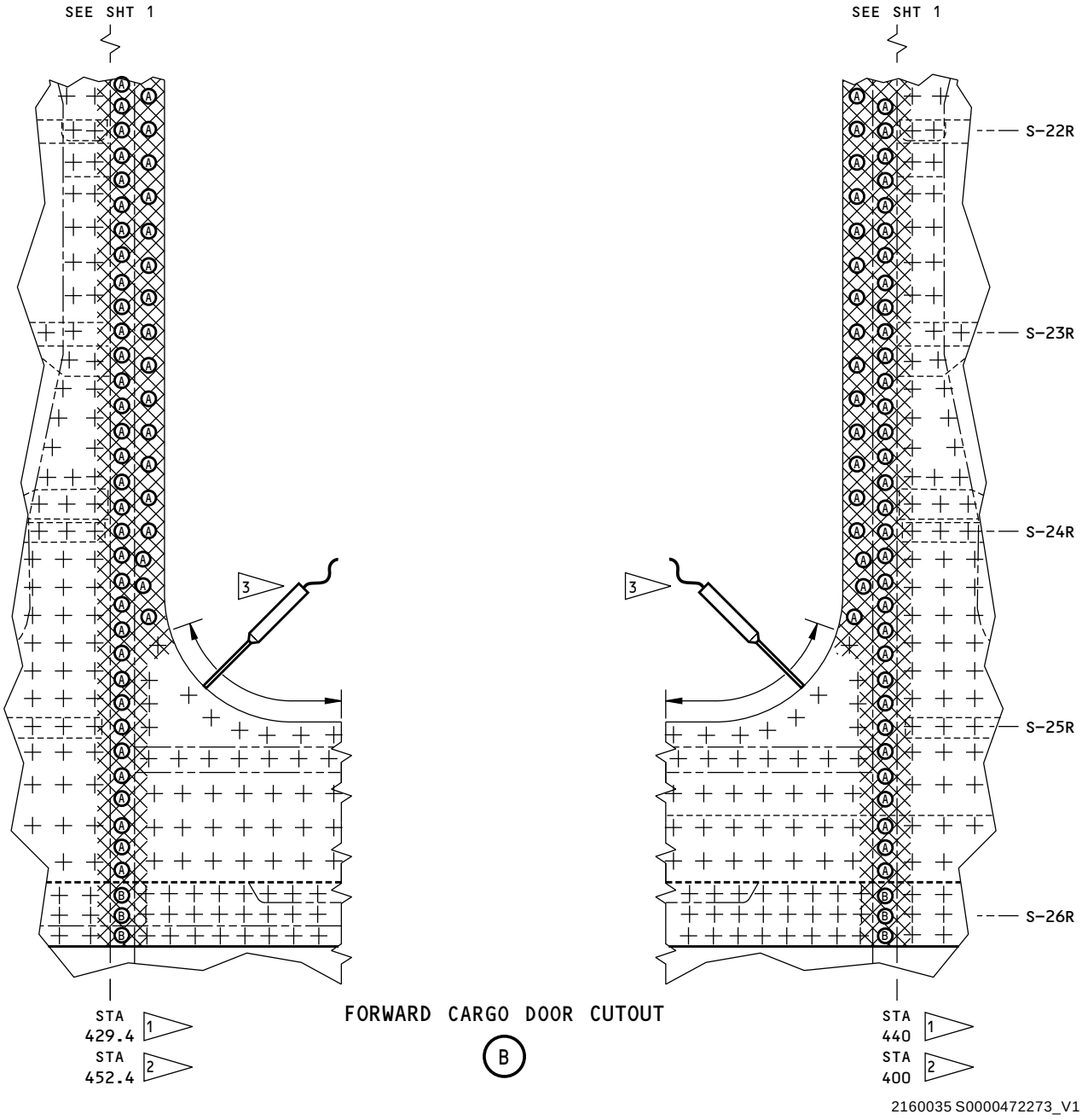

Inspection Locations at the Forward and Aft Cargo Door Cutouts
Figure 1 (Sheet 2 of 4)

BOEING PROPRIETARY - Copyright © Unpublished Work - See title page for details

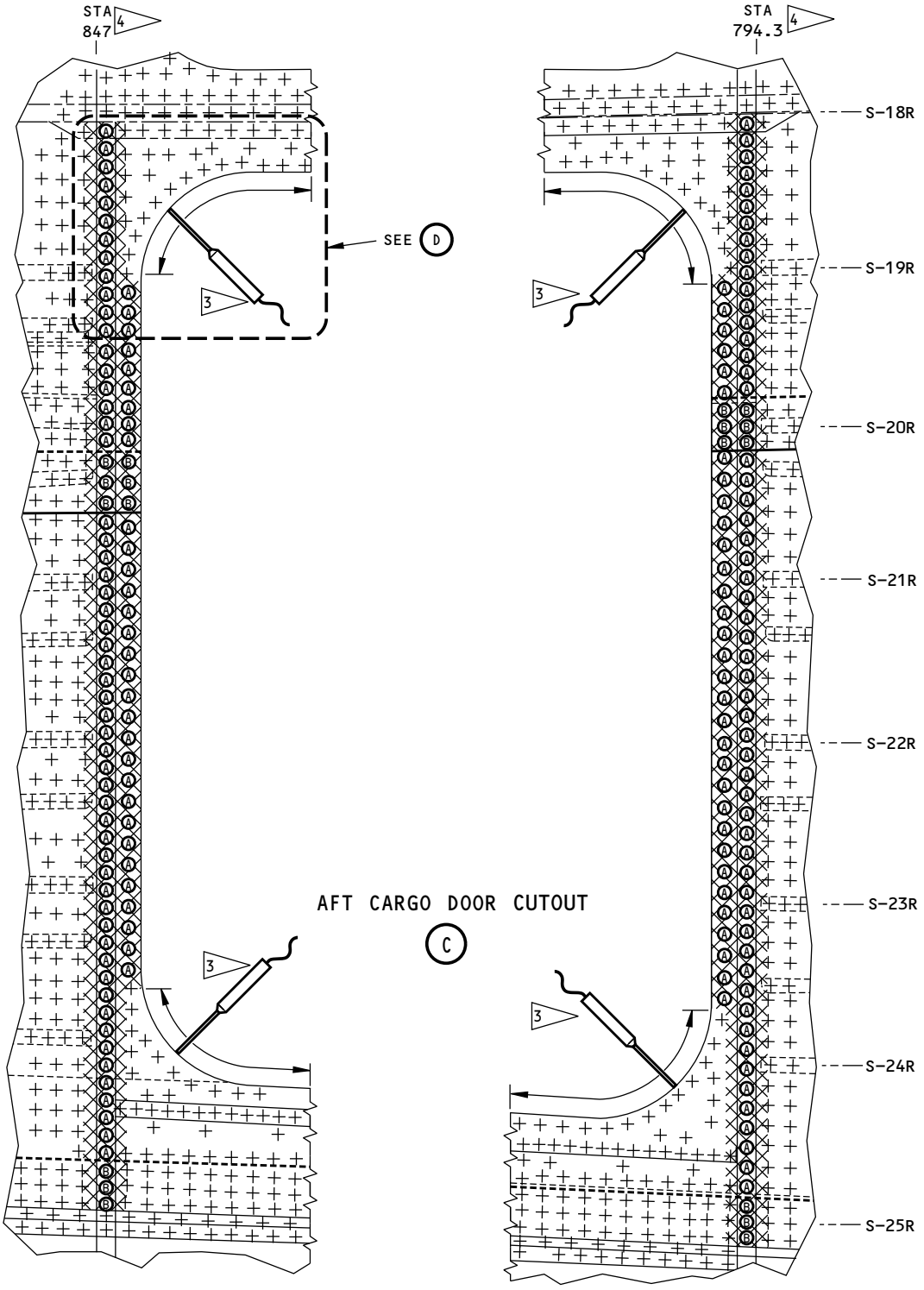

Inspection Locations at the Forward and Aft Cargo Door Cutouts
Figure 1 (Sheet 3 of 4)

BOEING PROPRIETARY - Copyright © Unpublished Work - See title page for details

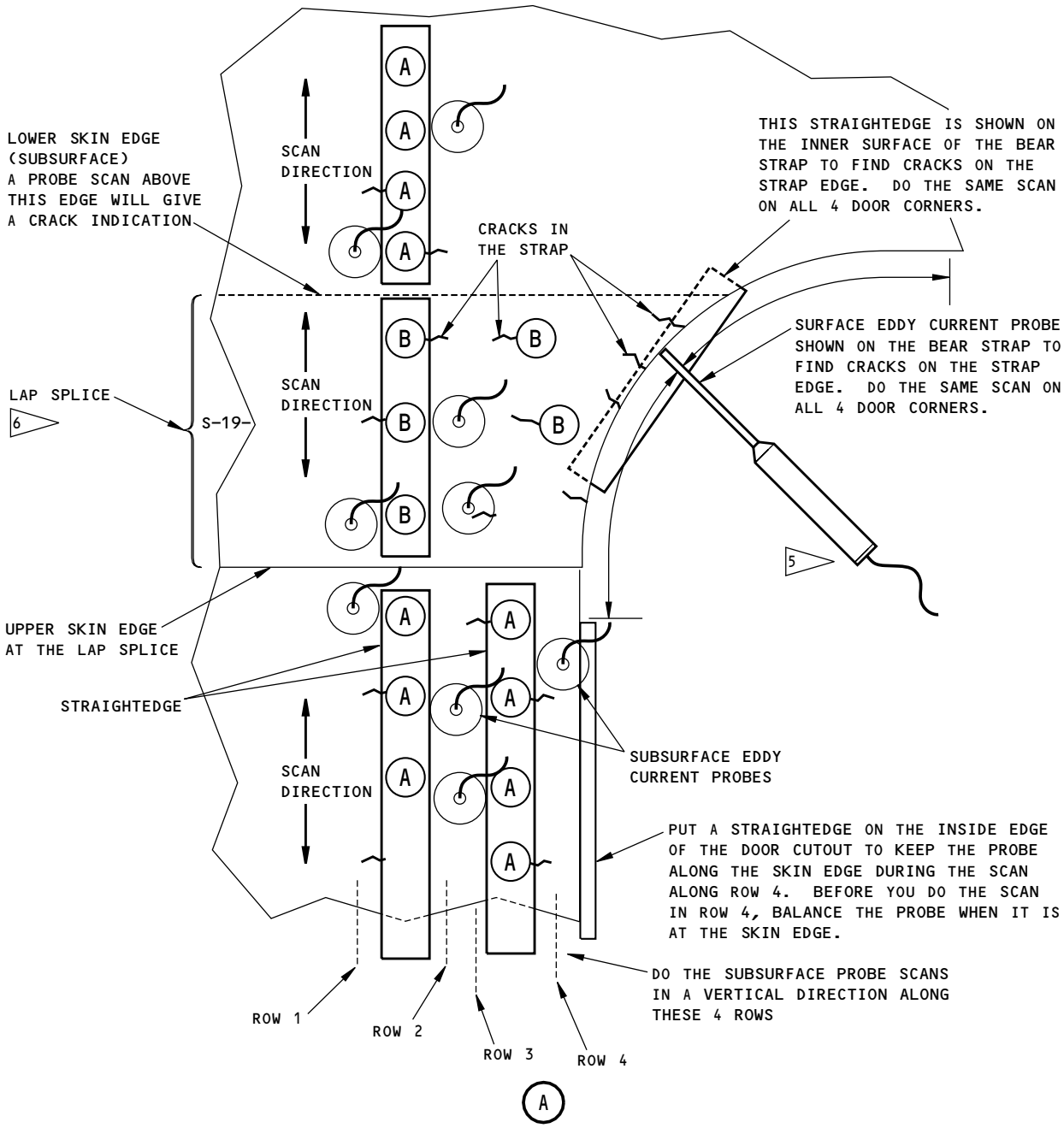

NOTES

- USE A STRAIGHTEDGE TO DO A VERTICAL SUBSURFACE SCAN ALONG THE FASTENERS (A) AND (B).

5 SEE FIGURE 1, SHEETS 1, 2, AND 3 FOR MORE DATA ON THIS INSPECTION AREA WITH A SURFACE PROBE.

6 THIS FIGURE SHOWS THE CORNER OF THE FORWARD CARGO DOOR CUTOUT. THE AFT CARGO DOOR DOES NOT HAVE A LAP SPLICE AT THIS LOCATION.

2160038 S0000472275_V1

Inspection Locations at the Forward and Aft Cargo Door Cutouts
Figure 1 (Sheet 4 of 4)

BOEING PROPRIETARY - Copyright © Unpublished Work - See title page for details

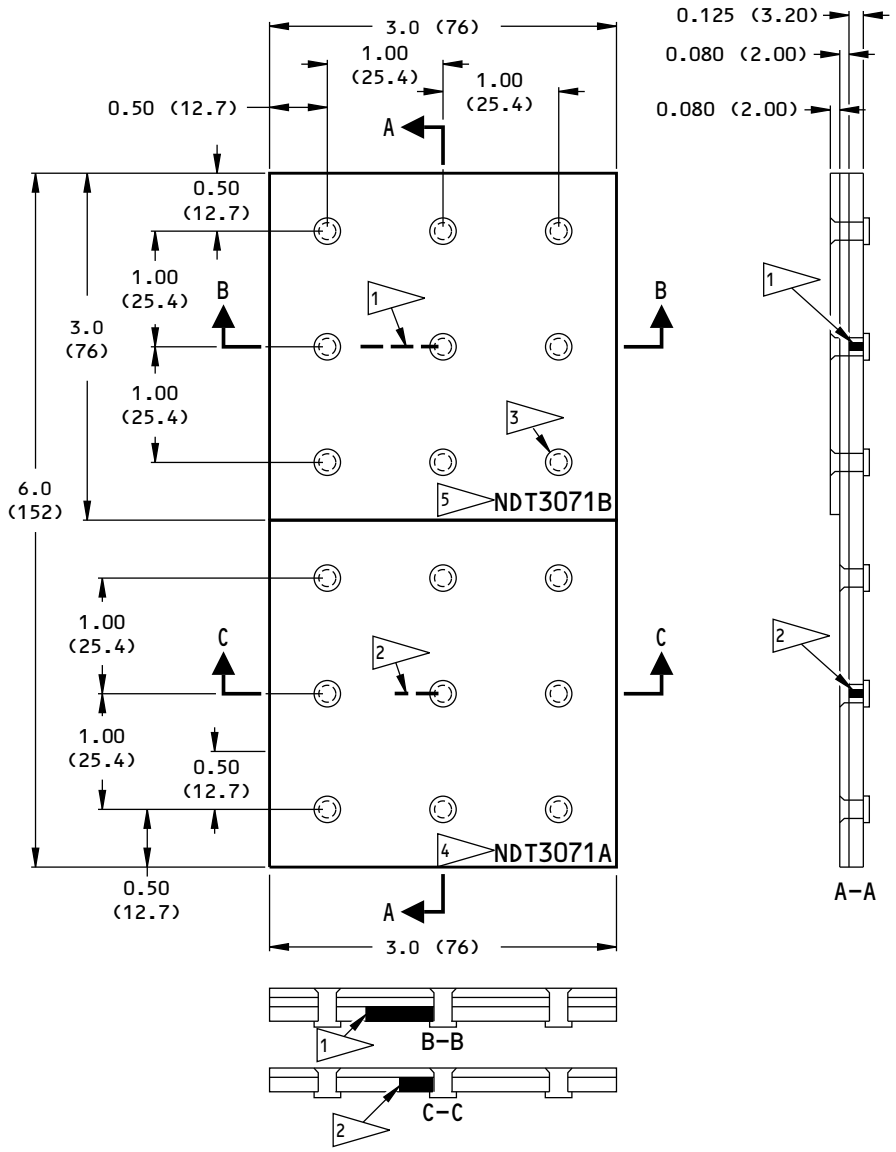

NOTES:

- ALL DIMENSIONS ARE IN INCHES (MILLIMETERS ARE IN PARENTHESES)
- TOLERANCES (UNLESS SPECIFIED DIFFERENTLY):

INCHES	MILLIMETERS
X.XXX = ±0.005	X.XX = ±0.10
X.XX = ±0.025	X.X = ±0.5
X.X = ±0.050	X = ±1

- MATERIAL: 2024-T3 CLAD OR BARE
- RIVETS: BACR15GF5D8 (QUANTITY 9)
  BACR15GF5D6 (QUANTITY 9)
- SURFACE ROUGHNESS = 125 Ra OR BETTER
- THE MAXIMUM WIDTH OF ALL EDM NOTCHES IS 0.020 (0.51)

1 EDM NOTCH 0.80 (15.2) LONG X 0.125 (3.20) DEEP (THROUGH NOTCH)
2 EDM NOTCH 0.30 (7.6) LONG X 0.125 (3.20) DEEP (THROUGH NOTCH)
3 0.158 (4.00) HOLE DIAMETER WITH A 100 DEGREE COUNTERSINK (18 LOCATIONS)
4 ETCH OR STEEL STAMP THE REFERENCE STANDARD NUMBER NDT3071A
5 ETCH OR STEEL STAMP THE REFERENCE STANDARD NUMBER NDT3071B

2160039 S0000472276_V1

Reference Standard NDT3071
Figure 2

BOEING PROPRIETARY - Copyright © Unpublished Work - See title page for details

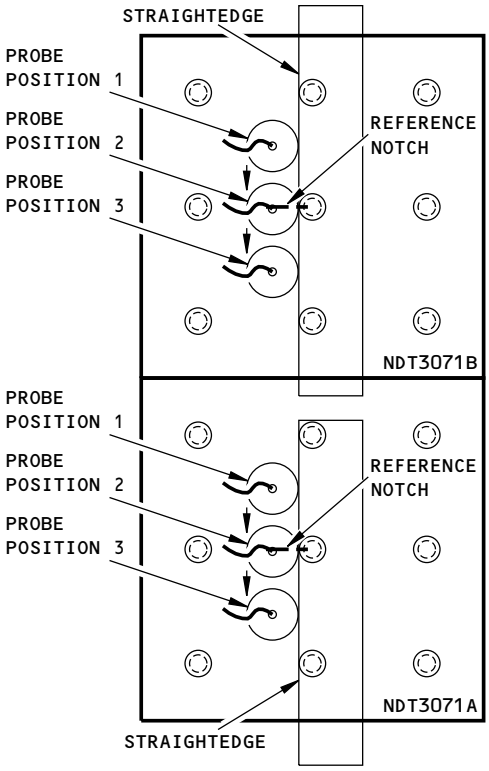

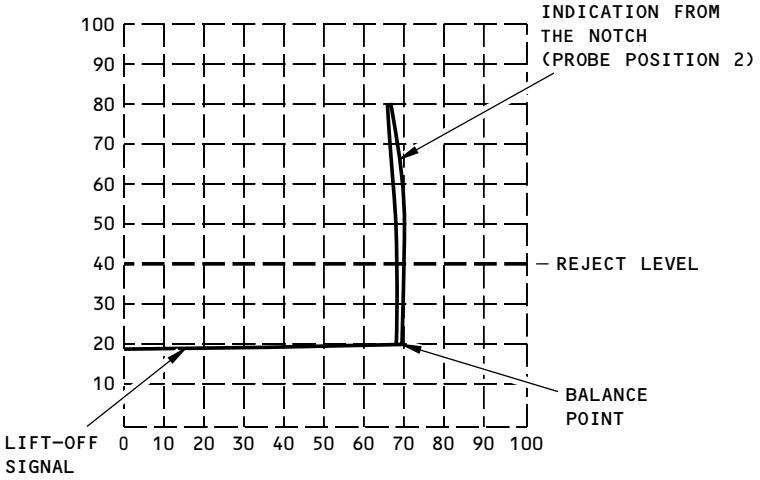

NOTES:

- NDT3071A IS FOR THE SUBSURFACE INSPECTION AWAY FROM THE LAP SPLICES.
- NDT3071B IS FOR THE SUBSURFACE INSPECTION AT THE LAP SPLICES.
- THE CALIBRATION SIGNALS ARE THE SAME FOR NDT3071A AND NDT3071B.

2160040 S0000472277_V1

Instrument Calibration
Figure 3

BOEING PROPRIETARY - Copyright © Unpublished Work - See title page for details

PART 6 - EDDY CURRENT

SHEAR TIED FRAMES AT LOWER LOBE, S-17L TO S-17R, BS 360 TO BS 540

1. Purpose

A. Use this procedure to do a surface eddy current inspection to find cracks in the inner chords of the shear tied frames from BS 360 to BS 540 and between stringers 17L to 17R (lower lobe). See Figure 1 for the inspection area.

B. The inspection area is of the frame inner chord at the stringer tie locations from stringer 17L to 17R (lower lobe).

C. This procedure uses an impedance plane display or a meter display instrument.

D. 737 Supplemental Structural Inspection Document (D6-86229) Reference:

(1) Item: F-33A

2. Equipment

A. General

(1) Use inspection equipment that can be calibrated on the reference standard as specified in Paragraph 4.

(2) Refer to Part 1, 51-01-00, for data about the equipment manufacturers.

B. Instrument

(1) Use an eddy current instrument that:

(a) Has an impedance plane display or a meter display.

(b) Operates at a frequency range of 50 to 500 kHz.

(2) The instruments that follow were used to help prepare this procedure.

(a) Phasec 2200, Phasec 2 (impedance plane display); Hocking Krautkramer

(b) Nortec 19e, 1000, 2000 (impedance plane display); Staveley Instruments

(c) Locator (meter display); Hocking

C. Probes

(1) Use a 0.125 inch (3.18 mm) diameter straight or right-angle pencil probe.

(2) The probes that follow were used to help prepare this procedure.

(a) MP-30; NDT Engineering Corp.

(b) MP905-50; NDT Engineering Corp.

D. Reference Standard

(1) For meter display instruments, refer to Part 6, 51-00-00, Procedure 4, for reference standard data for the applicable reference standards.

(2) For impedance plane display instruments, refer to Part 6, 51-00-00, Procedure 23, for reference standard data for the applicable reference standards.

3. Prepare for the Inspection

A. Identify the inspection area. See Figure 1.

B. Remove necessary structure to gain access to the inspection area.

BOEING PROPRIETARY - Copyright © Unpublished Work - See title page for details

C. Clean the inspection area. Remove sealant as necessary. Remove paint only if it is loose.

4. Instrument Calibration

A. Calibrate the instrument as specified in Part 6, 51-00-00, Procedure 4, if a meter display instrument is used or Part 6, 51-00-00, Procedure 23 if an impedance plane display instrument is used.

5. Inspection Procedure

A. Calibrate the instrument as specified in Paragraph 4.

B. Make a scan of the inspection areas identified in Figure 1 of all shear-tied frames at the stringer tie locations as follows:

(1) Make a scan at stringer tie locations at the inboard fastener (see Detail I in Figure 1).

(2) At frame splice locations, make a scan at the fastener locations on the inner chord and at the inboard stringer tie fastener location (see Detail II in Figure 1).

(3) If structure prevents access to the inboard stringer tie fastener and to the top of the inner chord, do a scan along the forward and aft radiuses of the inner chord flange (see Detail III in Figure 1).

C. For instruments with a meter display, refer to Part 6, 51-00-00, Procedure 4, paragraph 6 for the inspection procedure. Refer to paragraph 6.D.(5) to examine near the edges.

D. For instruments with an impedance plane display, refer to Part 6, 51-00-00, Procedure 23, paragraph 6 for the inspection procedure. Refer to paragraph 6.E.(3)(e) to examine near the edges.

6. Inspection Results

A. Refer to the applicable inspection procedure for data to help make an analysis of the inspection results.

BOEING PROPRIETARY - Copyright © Unpublished Work - See title page for details

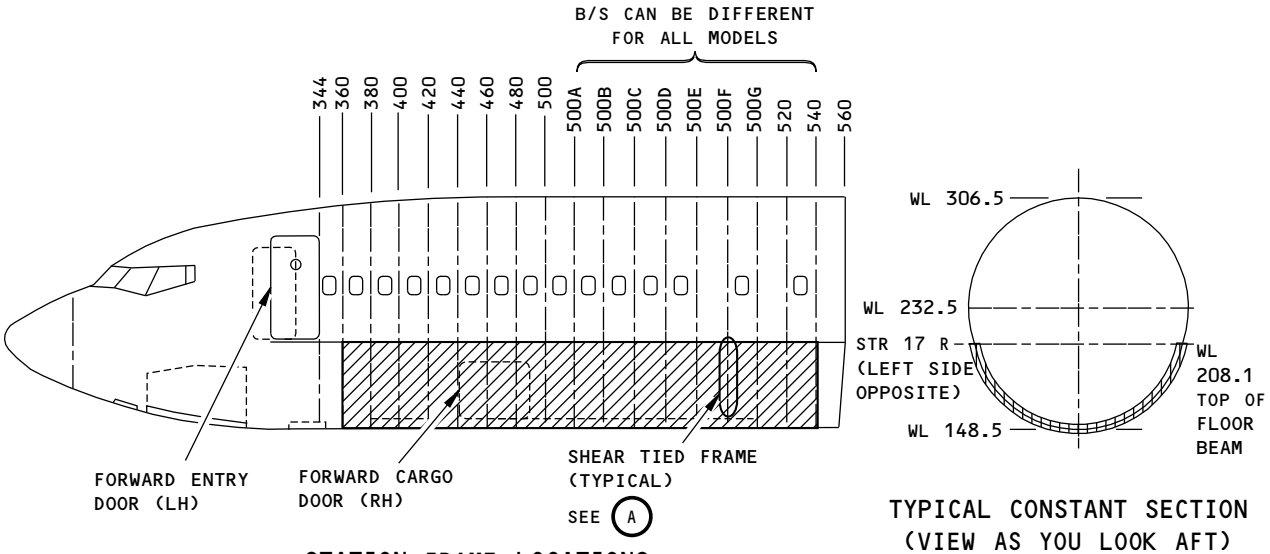

STATION FRAME LOCATIONS
BS 360 TO BS 540

TYPICAL CONSTANT SECTION
(VIEW AS YOU LOOK AFT)

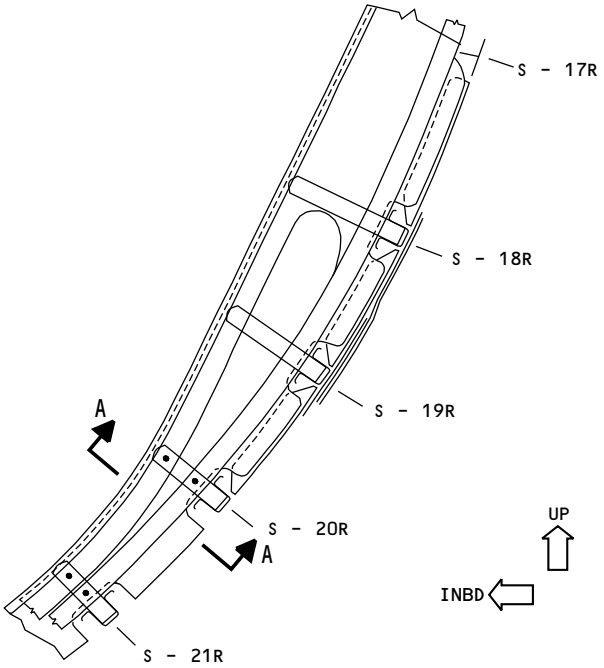

SHEAR TIED FRAME (TYPICAL)
(THE RIGHT SIDE IS SHOWN, THE LEFT SIDE IS ALMOST THE SAME)
BS 360 TO BS 540

A

2160043 S0000472279_V1

Shear-Tied Frames - BS 360 to BS 540 - Inspection Locations
Figure 1 (Sheet 1 of 3)

BOEING PROPRIETARY - Copyright © Unpublished Work - See title page for details

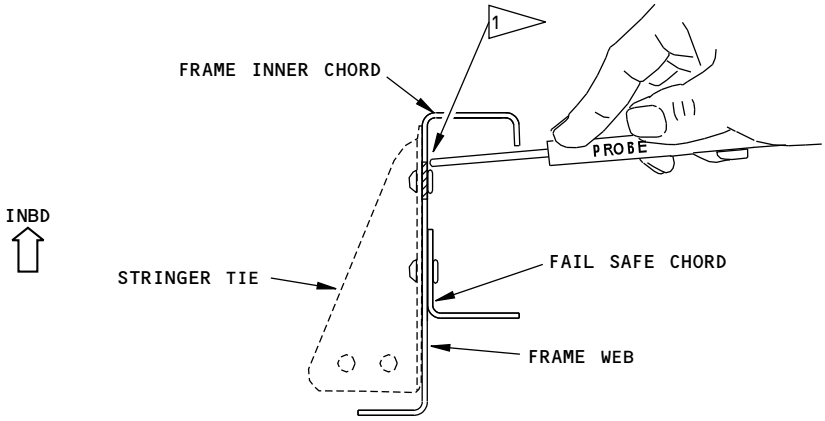

A-A (TYPICAL)
EXPOSED FASTENER AT STRINGER TIE
DETAIL I

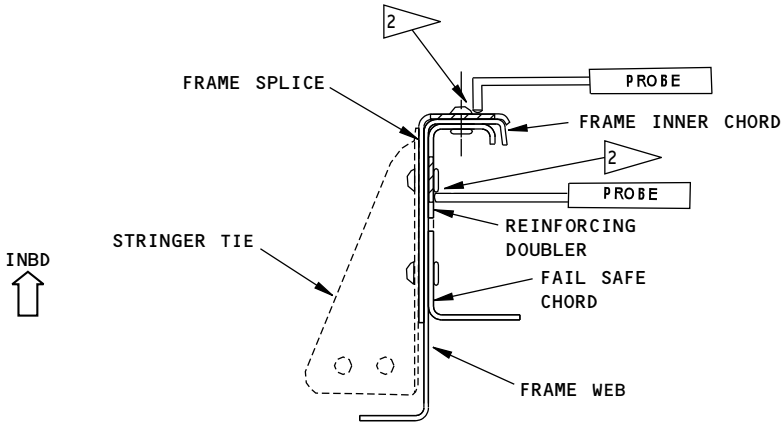

A-A (TYPICAL)
FRAME SPLICE AT STRINGER TIE
DETAIL II

NOTES:

INSPECTION AREA

1 MAKE A SCAN AT STRINGER TIE LOCATIONS AROUND THE INBOARD FASTENER.

2 AT FRAME SPLICE LOCATIONS, MAKE A SCAN AROUND THE FASTENER ON THE FRAME INNER CHORD AND AT THE REINFORCING DOUBLER AROUND THE INBOARD STRINGER TIE FASTENER

2160045 S0000472280_V1

Shear-Tied Frames - BS 360 to BS 540 - Inspection Locations
Figure 1 (Sheet 2 of 3)

BOEING PROPRIETARY - Copyright © Unpublished Work - See title page for details

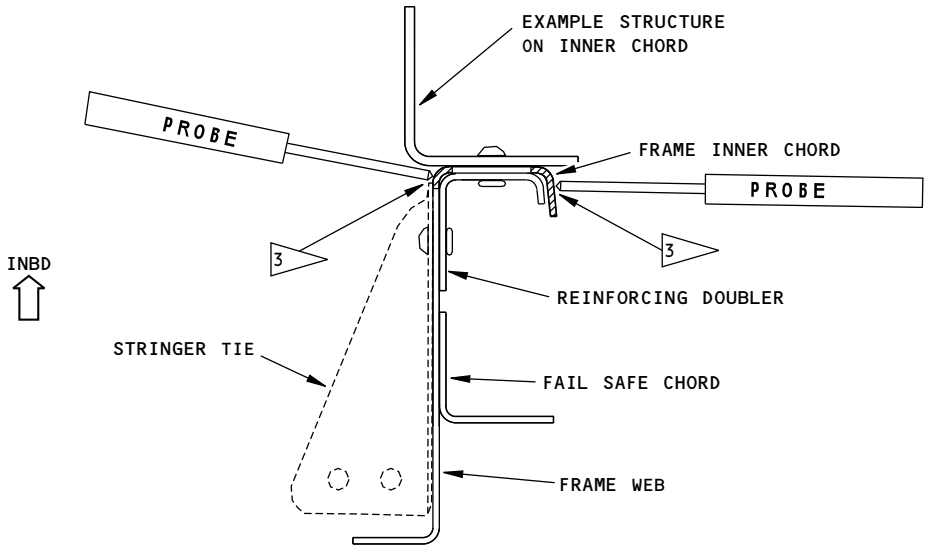

A-A (TYPICAL)
STRUCTURE THAT PREVENTS ACCESS TO THE INSPECTION AREA
DETAIL III

NOTES:

INSPECTION AREA

3 IF STRUCTURE PREVENTS ACCESS TO THE INSPECTION AREA DO A SCAN ALONG THE FORWARD AND AFT RADIUS OF THE INNER CHORD FLANGE

2160046 S0000472281_V1

Shear-Tied Frames - BS 360 to BS 540 - Inspection Locations
Figure 1 (Sheet 3 of 3)

BOEING PROPRIETARY - Copyright © Unpublished Work - See title page for details

PART 6 - EDDY CURRENT

FORWARD ENTRY DOOR CUTOUT WITH AND WITHOUT AIRSTAIRS

1. Purpose

A. Use this procedure to do subsurface eddy current inspections to find cracks in the outer chord of the frames and/or the bearstrap of the forward entry door cutout.

(1) The fastener locations at BS 303.9, BS 348.2 and BS 351.2 frames, between the upper and lower sills of the forward entry door.

(2) Along the edge of the door cutout.

(3) See Figure 1 for the A thru F inspection areas.

(4) All the inspections are done with the probe on the outer surface of the skin.

B. For airplanes with airstairs, use this procedure to do subsurface and surface eddy current inspections to find cracks in the bearstrap of the airstairs door cutout.

(1) Do a subsurface inspection at the fastener locations at BS 303.9 and BS 351.2 frames, between the upper and lower sills of the airstair door.

(2) Do a surface eddy current inspection on the edge of the bearstrap at the aft edge of the airstairs door cutout at BS 351.2, between stringers 18 and 20. It is necessary to do a surface inspection of this area because the distance between the edge of the door cutout and the fasteners is too small to do the subsurface inspection identified in Paragraph 1.B.(1).

(3) See Figure 1 for the G and H inspection areas.

(4) The inspections identified in Paragraph 1.B.(1) are done with the probe on the outer surface of the skin. The inspection identified in Paragraph 1.B.(2) is done on the inside edge of the door cutout. See Paragraph 3.D. for access to the inspection area.

C. This procedure uses an impedance plane display instrument with the probes that follow:

(1) Use an adjustable sliding probe to do the subsurface inspections at all the fastener locations identified in Paragraph 1.A.(1) and Paragraph 1.B.(1).

(2) Use a spot probe to do the subsurface inspections along the edge of the entry door cutout and adjacent to the external production tripler (on airplanes with airstairs), where the sliding probe cannot be used as specified in Paragraph 1.B.(1).

(3) Use a shielded pencil probe to do a surface inspection on the edge of the bearstrap at the aft edge of the airstairs door cutout identified in Paragraph 1.B.(2).

D. 737 Supplemental Structural Inspection Document (D6-82669) Reference:

(1) Item: F-13

(2) Item: F-14

2. Equipment

A. General

(1) Use inspection equipment that can be calibrated on the reference standard as specified in Paragraph 4.

(2) Refer to Part 1, 51-01-00, for data about the equipment manufacturers.

B. Instrument

BOEING PROPRIETARY - Copyright © Unpublished Work - See title page for details

(1) Use an eddy current instrument that:

(a) Has an impedance plane display.

(b) Operates at a frequency range of 1 to 500 kHz.

(2) The instruments that follow were used to help prepare this procedure:

(a) Phasec 2200, Phasec 2; Hocking

(b) Nortec 1000/2000; Staveley Instruments

(c) Elotest B1; Rohman GmbH

C. Probes

(1) Probes for the subsurface inspection:

(a) Use an adjustable, reflection sliding probe that operates at frequencies between 500 Hz and 3 kHz.

1) The probes that follow were used to help prepare this procedure.

a) SPO-1958 with a 0.20 inch (5.1 mm) nonconductive spacer; Staveley Instruments

b) SPO-5251 with a 0.20 inch (5.1 mm) nonconductive spacer; Staveley Instruments

c) NEC-4083 with a 0.20 inch (5.1 mm) nonconductive spacer; NDT Engineering

2) Other adjustable, reflection sliding probes can be used if they can satisfactorily do the calibration instructions specified in this procedure. The spacer thickness can be different with other probes; use a thickness that will give equivalent results to the probes used to help prepare this procedure.

(b) Use a spot probe that can operate at frequencies between 1.5 and 3 kHz and has a maximum diameter of 0.35 inch (8.9 mm). A reflection type probe is recommended.

1) The probes that follow were used to help prepare this procedure.

a) SPO-5327; Staveley Instruments

b) RS053-1/2; NDT Engineering Corp.

(2) Probes for the surface inspections:

(a) Use a shielded pencil probe that has a maximum diameter of 0.13 inch (3.3 mm). Refer to Part 6, 51-00-00, Procedure 1, paragraph 3.B, for data about probe selection.

(b) The probes that follow were used to help prepare this procedure.

1) MTF902-50B; NDT Engineering Corp.

2) MP-20; NDT Engineering Corp.

D. Reference Standard

(1) For the subsurface inspections, use reference standard NDT3049 (see Figure 2).

(2) For the surface inspections, use reference standard 126 and 189 (or the equivalent) identified in Part 6, 51-00-00, Procedure 23.

E. Special Tools

(1) Use a flexible, nonconductive probe guide to align the probe on the reference standard during calibration and on the airplane during the inspections.

(2) A magnet to identify magnetic type fasteners.

BOEING PROPRIETARY - Copyright © Unpublished Work - See title page for details

3. **Prepare for the Inspection**

A. Identify the fastener locations to be examined in the inspection areas shown in Figure 1. It can be necessary to remove paint if the fasteners cannot be seen.

B. Do a check of all the fastener locations with a magnet to find and identify magnetic type fasteners on the airplane.

C. Remove the rain gutter at the upper hinge location.

D. For airplanes with airstairs move or remove the necessary structure to get access to the inspection surface identified as flagnote 3 in inspection area H of Figure 1.

E. Clean the inspection area.

(1) Remove sealant as necessary. Use care to prevent damage to the surface of the skin if sealant removal is necessary. Refer to the Airplane Maintenance Manual for more instructions if necessary.

(2) Remove paint only if it is loose.

4. **Instrument Calibration**

A. Calibrate the equipment for the subsurface inspections at the areas identified in Paragraph 1.A.(1), Paragraph 1.A.(2) and Paragraph 1.B.(1) as follows:

(1) To examine the fastener locations at the areas identified in Paragraph 1.A.(1) and Paragraph 1.B.(1), with the adjustable sliding probe, calibrate the instrument as follows:

(a) Identify all the fastener locations that are to be examined on the airplane identified in the inspection areas in Figure 1. All the fastener locations are identified as a symbol.

(b) Go to the Calibration Table in Detail II in Figure 3 to identify the calibration data (reference standard fastener location and instrument frequency) that will be used to examine the fastener locations in Figure 1 that have the same symbol.

(c) Set the instrument frequency to the frequency specified in the Calibration Table in Detail II in Figure 3 for the fastener symbol to be examined.

(d) Identify the fastener location letter on reference standard NDT3049 that is specified in the Calibration Table in Detail II in Figure 3 for the fastener symbol to be examined.

(e) Put a nonconductive shim or tape on the reference standard if the airplane is painted. Use a shim or tape thickness that is within ±0.003 (0.08 mm) of the thickness of the paint.

(f) Put the probe at the “balance point” position of the reference standard to balance the instrument. The correct probe location is identified as follows:

1) Go to the Calibration Table in Figure 3 with the fastener code to be examined (fastener codes are identified in Figure 1) and the fastener size (#6 or #8 fastener; you need to look at the airplane to know this).

2) Identify the applicable letter (identified as letters A thru H) from the Calibration Table. This letter relates to the letter on the reference standard to use during calibration.

3) Put the probe on the reference standard so that it is adjacent to the fastener that is nearest to the fastener with the letter identified in Paragraph 4.A.(1)(f)2) as follows:

a) The probe must be on the opposite side of the fastener that is adjacent to the fastener with the letter (see Figure 3, probe positions 1 and 3 for examples).

b) Make sure that the fasteners in the reference standard have the same magnetic properties as the fasteners to be examined on the airplane.

BOEING PROPRIETARY - Copyright © Unpublished Work - See title page for details

<1> Replace the fasteners in the reference standard, as necessary, so that they have the dimensions and magnetic properties of the fasteners to be examined.

c) Align the probe to examine a magnetic or a nonmagnetic fastener as shown in Figure 3. Figure 3 shows examples of the correct probe positions to examine magnetic or nonmagnetic fasteners. In the Figure 3 example, probe position 1 is used to get the balance point for a letter E fastener inspection and probe position 3 is used to get the balance point for a letter A fastener inspection. In the Figure 3 example, probe position 1 is the probe position for a nonmagnetic fastener and probe position 3 is the probe position for a magnetic fastener.

<1> To examine magnetic fasteners, the probe spacer must be aligned with the edge of the fastener holes (as shown by probe position 3 in Figure 3).

<2> To examine nonmagnetic fasteners, the probe spacer must be aligned with the centerline of the fastener holes (as shown by probe position 1 in Figure 3).

NOTE: Probe positions 1 thru 4 shown in Detail I in Figure 3 are examples of the typical positions for all the fastener locations identified as letters A thru H on the reference standard.

(g) Balance the instrument.

(h) Set the balance point in the lower right area of the screen display as shown in Figure 3.

(i) Tilt the probe and adjust the instrument phase control so that the initial lift-off signal goes to the left side of the screen display.

(j) Put the probe guide on the reference standard against the probe and align the probe guide with the fasteners. See Detail I in Figure 3.

(k) Move the probe from the “balance point” position to the “inspection fastener” position for the applicable letter identified in Paragraph 4.A.(1)(f)2).

1) Examples of the probe positions are shown in Figure 3. Position 2 shows the probe in a position to examine a nonmagnetic fastener. Position 4 shows the probe in the position to examine a magnetic fastener.

(l) Move the probe backward and forward between the “balance point” position and the “inspection fastener” position, as necessary, while you adjust the instrument gain and phase controls so that the signals from the fastener locations look almost the same as the signals shown on the screen display in Figure 3. Use a vertical gain that is higher than the horizontal gain or a vertical to horizontal gain ratio that will cause the signals to have a minimum separation of 30% of full screen height (FSH).

NOTE: (1) The height of the signal from the fastener location at the “balance point” position and the angular location of the lift-off line are not as important as the 30% of FSH separation between the signals from the “balance point” and the “inspection fastener” positions.

NOTE: (2) It can be necessary to put the balance point at a lower position on the screen display, to get a 30% of FSH separation between the signals from the “balance point” and the “inspection fastener” positions.

(m) Set the alarm as specified in Figure 3, flagnote 3.

BOEING PROPRIETARY - Copyright © Unpublished Work - See title page for details

(2) To examine the areas identified in Paragraph 1.A.(2) and, if applicable, adjacent to the external production tripler for the airstairs door cutout, calibrate the instrument with the spot probe as follows:

NOTE: Two calibrations are necessary to examine all of the inspection areas.

(a) Set the instrument frequency as follows:

1) For the inspection areas away from the lap splices (single skin), identified by cross-hatched lines in Figure 1, set the instrument frequency to 3 kHz.

2) For the inspection areas at the lap splices (double skin), identified by diagonal parallel lines in Figure 1, set the instrument frequency to 1.5 kHz.

(b) Put a nonconductive shim or tape on the reference standard if the airplane is painted. Use a shim or tape thickness that is within ±0.003 (0.08 mm) of the thickness of the paint.

(c) Put a nonconductive probe guide on the reference standard, with the edge of the probe guide along the edge of the fastener heads, as shown in Detail I in Figure 4.

(d) Put the probe on reference standard NDT3049 at position 1 (see Detail I in Figure 4) for the inspection areas away from the lap splice or doublers (single skin) or at position 4 for the areas at the lap splice or doublers (double skin). Make sure the probe is against the probe guide during the complete calibration.

(e) Balance the instrument.

(f) Adjust the instrument phase control so that the lift-off signal moves horizontally to the left as shown in Detail II in Figure 4.

(g) Set the balance point to the position shown on the screen display in Detail II in Figure 4.

(h) Adjust the instrument sensitivity as follows:

1) Move the probe to probe position 2 or 5 on the reference standard, above the notch.

2) Add the gain as necessary to get the notch signal on the screen display. Move the probe a small quantity on each side of the notch, as necessary, to get the maximum signal.

3) Adjust the instrument sensitivity to put the notch signal at 70% of FSH (40% higher than the balance point). See Detail II in Figure 4.

NOTE: Use more vertical gain than the horizontal gain to get a satisfactory vertical signal. The vertical to horizontal gain ratio must be approximately 2 to 1, Do not use more than 6 dB of vertical gain higher than the horizontal gain.

4) Move the probe to probe position 3 or 6 (see Detail I in Figure 4) to identify if an edge effect signal occurs from the fastener. An edge effect signal will occur at a different phase angle than the notch signal at probe position 2 or 5. If the edge effect signal does not have sufficient separation from the notch signal, use a different probe with better shielding.

(i) Set the alarm as specified in Detail II in Figure 4.

B. Calibrate the equipment for the surface inspection of the areas identified in Paragraph 1.B.(2) with the pencil probe as follows:

(1) Calibrate the equipment as specified in par. 5, “Instrument Calibration”, of Part 6, 51-00-00, Procedure 23. Use the reference standards as follows:

(a) Use reference standard 126 (or an equivalent) for the initial calibration.

(b) Use reference standard 189 (or an equivalent) and the 0.100 inch (2.54 mm) thick piece to make sure the probe can satisfactorily examine the edge of the bearstrap.

BOEING PROPRIETARY - Copyright © Unpublished Work - See title page for details

5. **Inspection Procedure**

A. Examine the fastener locations at the areas identified in Paragraph 1.A.(1) and Paragraph 1.B.(1), with the adjustable sliding probe as follows:

(1) Identify the fastener locations on the airplane from the inspection areas shown in Figure 1.

(2) Calibrate the instrument as specified in Paragraph 4.A.(1) for the fastener symbol identified in Figure 1 that is to be examined.

(3) Put the probe on the outer surface of the airplane skin so that it is equally between two fasteners and in the position as shown in View AA of Figure 1, Sheet 2. Make sure that the probe is aligned correctly for the type of fastener (magnetic or nonmagnetic) to be examined.

(4) Balance the instrument.

(5) Tilt the probe to do a check of the lift-off signal. It can be necessary to make a small adjustment of the instrument phase control to get the same lift-off signal that you got during calibration.

(6) Do a scan inspection of all the same fastener locations identified in Figure 1 as follows:

(a) For all nonmagnetic fasteners, put the probe guide on the skin so that the center of the probe spacer is aligned with the center of the fastener head. Only one scan is necessary. See View AA of Figure 1, Sheet 2, for the probe position on the airplane.

(b) For all magnetic fasteners, put the probe guide on the skin so that the spacer is fully on one side of the fastener head, with the edge of the spacer along the edge of the fastener head. Two scans are necessary, one on each side of the fastener head. See View AA of Figure 1, Sheet 2, for the probe position on the airplane.

(c) Monitor the balance point on the screen display at all times for movement away from the balance position. The distance between fasteners can cause the balance point to move.

(d) Monitor the screen display for an increase in the signal height, above the usual fastener location signal. Make a mark, with an approved marker, at all the locations where the signal is above the alarm level. Refer to Paragraph 6., “Inspection Results”, to do more analysis of all the marked fastener locations.

(e) Monitor the screen display for a decrease in the signal height, length and phase angle from the usual fastener location signal. This decrease of the signal occurs when the probe is not aligned with the fastener head. If a fastener location shows a decrease in the signal height, do a scan of the fastener location again, with the probe correctly aligned. It can be necessary to remove paint if the fastener head cannot be seen.

(7) Do Paragraph 5.A.(2) thru Paragraph 5.A.(6) again for the remaining fastener symbols that are to be examined.

B. Examine the areas identified in Paragraph 1.A.(2) and, if applicable, the areas adjacent to the external production tripler for the airstairs door cutout, with the spot probe as follows:

(1) Identify the inspection areas on the airplane from the inspection areas shown in Figure 1.

(2) Calibrate the instrument as specified in Paragraph 4.A.(2).

(3) Put the probe guide on the inside edge of the door cutout, in an area to be examined as shown in View CC of Figure 1, Sheet 2.

(4) Put the probe on the outer surface of the airplane skin, in the inspection area between fasteners and with the edge of the probe on the edge of the door cutout and against the probe guide. See View CC of Figure 1 for the typical probe position.

(5) Balance the instrument.

BOEING PROPRIETARY - Copyright © Unpublished Work - See title page for details

(6) Tilt the probe to do a check of the lift-off signal. It can be necessary to make a small adjustment of the instrument phase control to get the lift-off signal that you got during calibration.

(7) Do a scan of all the inspection areas identified in Figure 1. During the scan:

(a) Make a mark, with an approved marker, at all the locations where the signal is above the alarm level. Refer to Paragraph 6., “Inspection Results”, to do more analysis of all the marked locations.

C. Examine the areas identified in Paragraph 1.B.(2) with the pencil probe as follows:

(1) Identify the inspection areas on the airplane from inspection area H shown in Figure 1, flagnote 3.

(2) Calibrate the instrument as specified in Paragraph 4.B.

(3) Make a scan of the inspection areas with the probe on the edge of the bearstrap. Use a nonconductive guide to keep the probe aligned on the edge during the scan. Refer to paragraph 6.E.(3)(e) of Part 6, 51-00-00, Procedure 23, for how to do an inspection on the edge of a part.

6. Inspection Results

A. Results of the subsurface inspections at the areas identified in Paragraph 1.A.(1) and Paragraph 1.B.(1) that are examined with the adjustable sliding probe.

(1) A vertical signal that is equal to, or more than, the alarm level set in Figure 3, flagnote 3, is a sign of a possible crack. Do more analysis of the possible crack signal as follows:

(a) Make sure the fastener type (magnetic or nonmagnetic) and dimension is the same as that used during calibration. If the fastener is not the same, calibrate the equipment again for the correct fastener and examine the fastener location again. If the possible crack signal is not caused by the fastener, go to Paragraph 6.A.(1)(b).

(b) Monitor the location of the probe compared to the fastener location. A crack at the fastener location will cause a signal to occur as the probe is centered above the fastener. An edge effect signal can occur from the edge of shims or the lower skin, at the lap splices (S-10, 14 and 19), as the probe is moved near the edge of the shim or lower skin. An edge effect signal will look different than a crack signal, but can go up into the alarm level. Do a scan at the fastener location(s) with the probe 90 degrees to the normal probe direction as shown in View EE of Figure 1, Sheet 3, as follows, to help identify the cause of the signal.

NOTE: Figure 5 shows the probe positions on the reference standard and shows the screen displays of the signals from the fastener locations with and without a notch.

1) Balance the probe between two fasteners as shown in Figure 3, Sheet 1 and move the probe to probe position 1 to get a signal as shown in Detail II, flagnote 1 in Figure 5.

2) Move the probe in the scan direction as shown in Detail I in Figure 5 to get a complete fastener signal as shown in Detail II, flagnote 2 in Figure 5.

3) Do Paragraph 6.A.(1)(b)1) and Paragraph 6.A.(1)(b)2) again, but put the probe at position 2 and refer to flagnote 3 and 4 in Detail III in Figure 5.

a) The probe is not sensitive to the edge of the shim or lower skin when it is scanned in this direction, but the probe will see the edge of the frame outer chord as the probe is moved by the fastener.

b) A crack signal at the fastener location will look almost the same as the signal shown as flagnote 4 in Detail III in Figure 5.

(c) Remove the fastener and do an open hole inspection as specified in Part 6, 51-00-00, Procedure 16, to make sure of the results.

BOEING PROPRIETARY - Copyright © Unpublished Work - See title page for details

B. Results of the subsurface inspection at the areas identified in Paragraph 1.A.(2) and, if applicable, adjacent to the external production tripler for the airstairs door cutout, with the spot probe.

(1) A vertical signal that is 20% higher than the balance point is a possible crack signal. A crack signal occurs during a short scan. Do more analysis of the possible crack signal as follows:

(a) A slow vertical signal can be caused by separation between layers. This signal will occur during a longer scan than a crack signal. Compare the signal you get during the inspection to the signal you got from the reference standard during calibration.

(b) Make sure the signal is not caused by the edge of subsurface structure (shims, edge of lower skin). Do visual inspections on the edge of the door cutout, to identify the edges of such structure. Remove paint if the edges of the skin and substructure are not visible.

(c) Do an eddy current surface inspection along the inside edge of the bearstrap in the location of the possible crack signal. Use the instructions specified in Paragraph 5.C. of this procedure. If no crack signal occurs, go to Paragraph 6.B.(1)(d).

(d) Remove the fastener(s) in the area of the signal and do an open hole inspection as specified in Part 6, 51-00-00, Procedure 16, to make sure of the results.

C. Results of the surface inspection at the area identified in Paragraph 1.B.(2), with the pencil probe.

(1) Use Part 6, 51-00-00, Procedure 23, paragraph 7, “Inspection Results”, to help make an analysis of the inspection results.

BOEING PROPRIETARY - Copyright © Unpublished Work - See title page for details

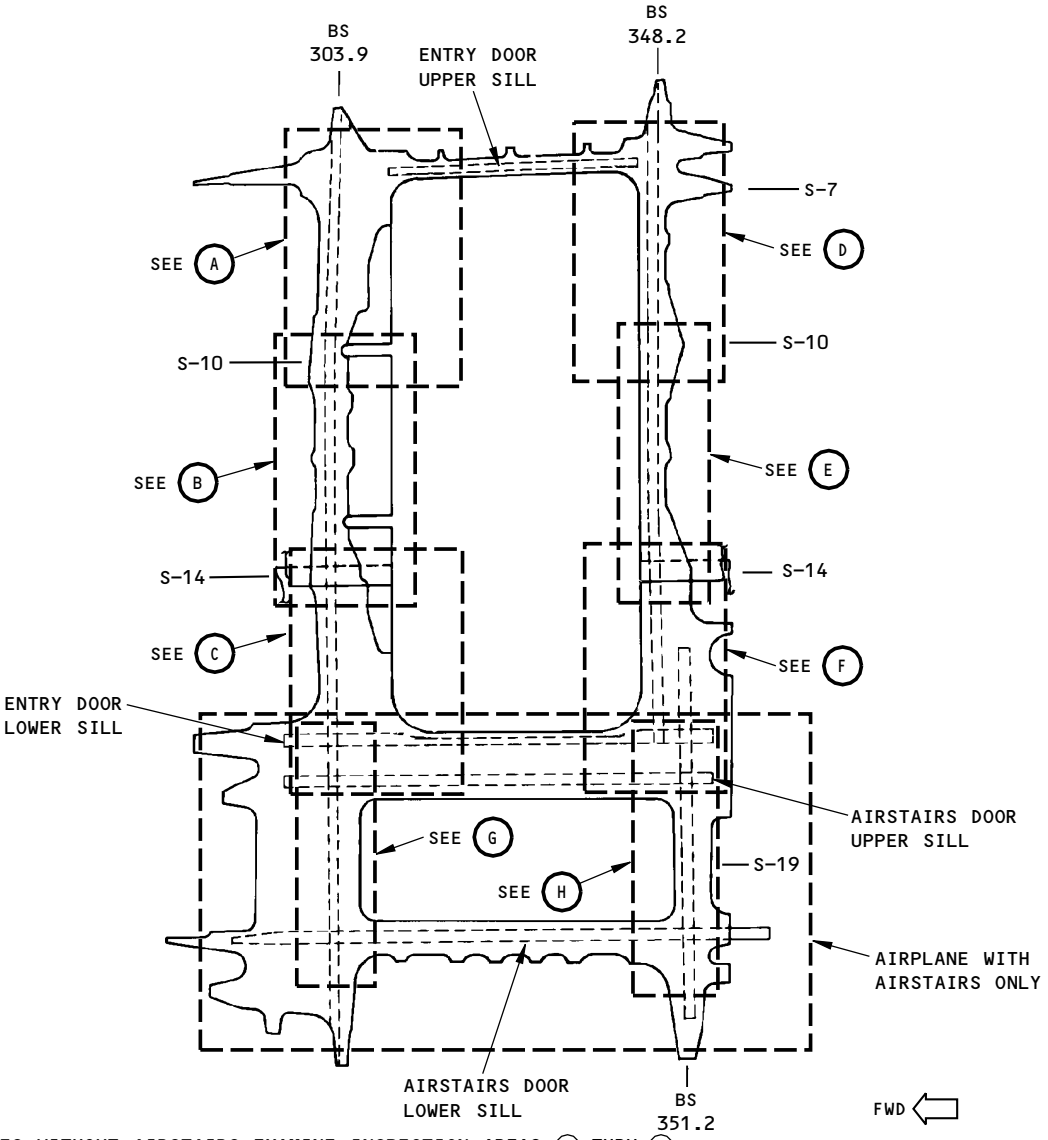

NOTES:

- AIRPLANES WITHOUT AIRSTAIRS EXAMINE INSPECTION AREAS (A) THRU (F).
- AIRPLANES WITH AIRSTAIRS EXAMINE INSPECTION AREAS (A) THRU (H).
- THERE ARE TWO CONFIGURATIONS OF SKIN INSTALLATIONS FOR THE FORWARD ENTRY DOOR. THE DIFFERENCES BETWEEN THE TWO CONFIGURATIONS ARE:
  (1) THE NUMBER, DIAMETER AND PATTERN OF THE FASTENERS AT SOME LOCATIONS.
  (2) ONE CONFIGURATION HAS SKIN LAP SPLICES AT S-10 AND S-19 AND THE OTHER CONFIGURATION SHOWN ABOVE DOES NOT HAVE THE LAP SPLICES.
- THE FASTENER LOCATIONS TO BE EXAMINED FOR CRACKS IN THE OUTER CHORDS AND/OR BEARSTRAPS ARE IDENTIFIED WITH A SYMBOL IN THE FIGURE 1 INSPECTION AREAS. THE FASTENER SYMBOLS IN THE INSPECTION AREAS IDENTIFY THE STRUCTURE TO BE EXAMINED THAT FOLLOWS:

  ○ ⊖ BEARSTRAP

  ● ⊘ ⊕ OUTER CHORD AND BEARSTRAP

2160049 S0000472283_V2

Inspection Areas
Figure 1 (Sheet 1 of 9)

BOEING PROPRIETARY - Copyright © Unpublished Work - See title page for details

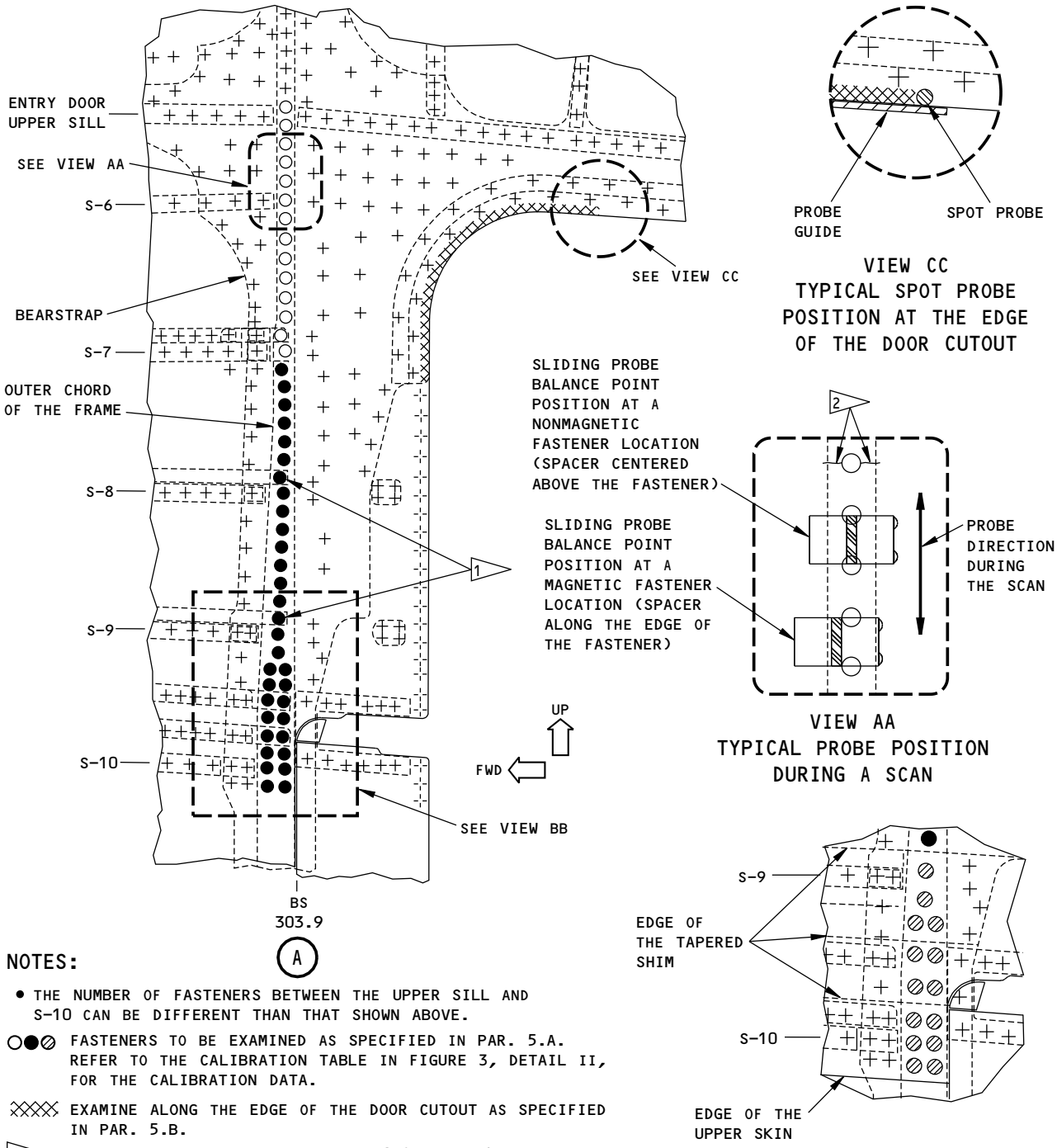

NOTES:

- THE NUMBER OF FASTENERS BETWEEN THE UPPER SILL AND S-10 CAN BE DIFFERENT THAN THAT SHOWN ABOVE.

○●⊘ FASTENERS TO BE EXAMINED AS SPECIFIED IN PAR. 5.A. REFER TO THE CALIBRATION TABLE IN FIGURE 3, DETAIL II, FOR THE CALIBRATION DATA.

EXAMINE ALONG THE EDGE OF THE DOOR CUTOUT AS SPECIFIED IN PAR. 5.B.

1 THIS FASTENER LOCATION CAN BE A 0.25 INCH (6.4 mm) DIAMETER FASTENER FOR SOME AIRPLANES.

2 TYPICAL CRACK DIRECTION IN THE BEARSTRAP AND/OR OUTER CHORD. THE CRACK CAN BE ON EACH SIDE OF THE FASTENER HOLE OR ONLY ON ONE SIDE.

2160053 S0000472284_V2

Inspection Areas
Figure 1 (Sheet 2 of 9)

BOEING PROPRIETARY - Copyright © Unpublished Work - See title page for details

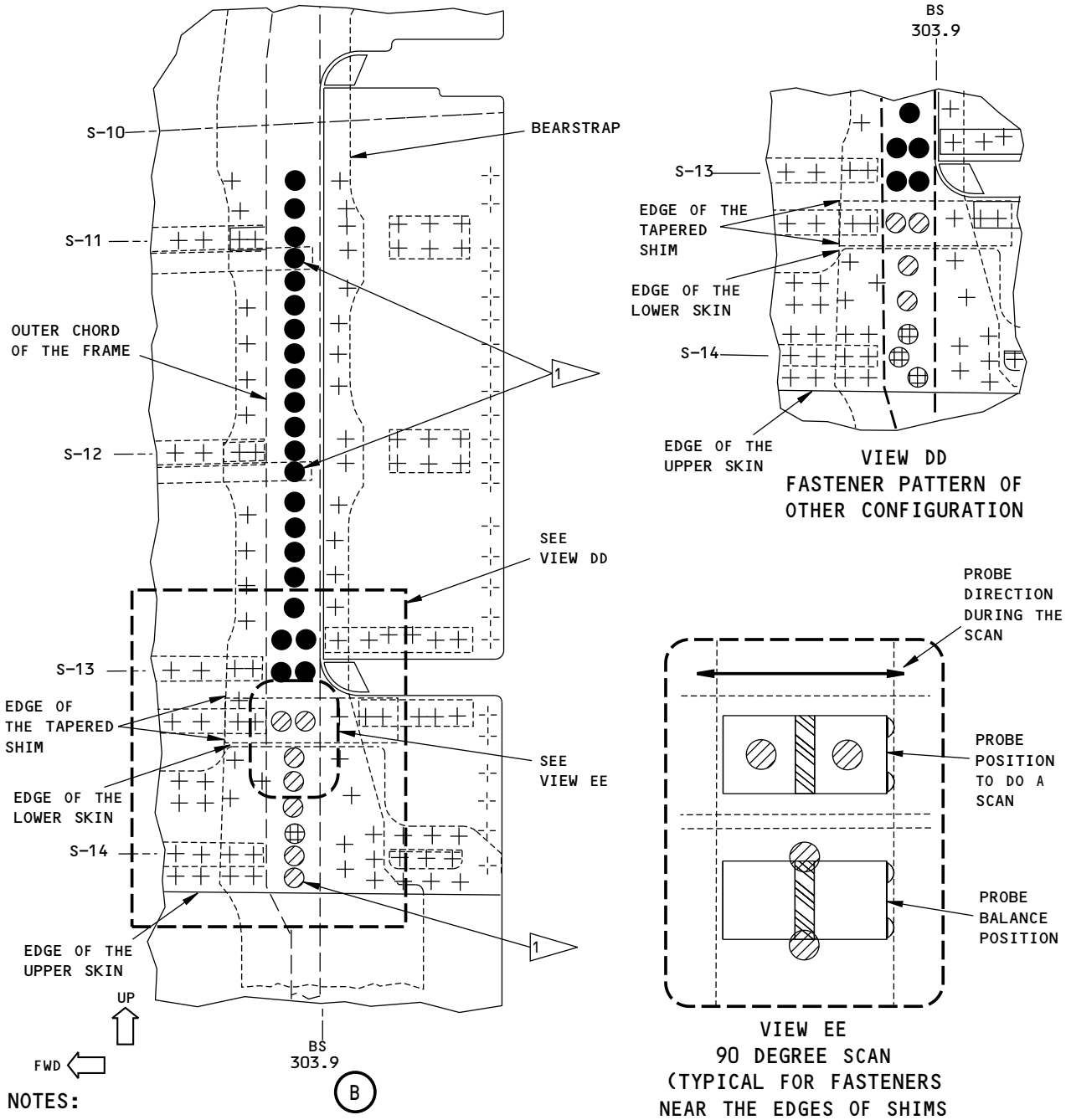

NOTES:

- THE NUMBER OF FASTENERS BETWEEN S-10 AND S-14 CAN BE DIFFERENT THAN THAT SHOWN ABOVE

● ⊘ ⊕ FASTENERS TO BE EXAMINED SPECIFIED AS IN PAR. 5.A. REFER TO THE CALIBRATION TABLE IN FIGURE 3, DETAIL II, FOR THE CALIBRATION DATA.

1 THIS FASTENER LOCATION CAN BE A 0.25 INCH (6.4 mm) DIAMETER FASTENER FOR SOME AIRPLANES.

2160057 S0000472285_V2

Inspection Areas
Figure 1 (Sheet 3 of 9)

BOEING PROPRIETARY - Copyright © Unpublished Work - See title page for details

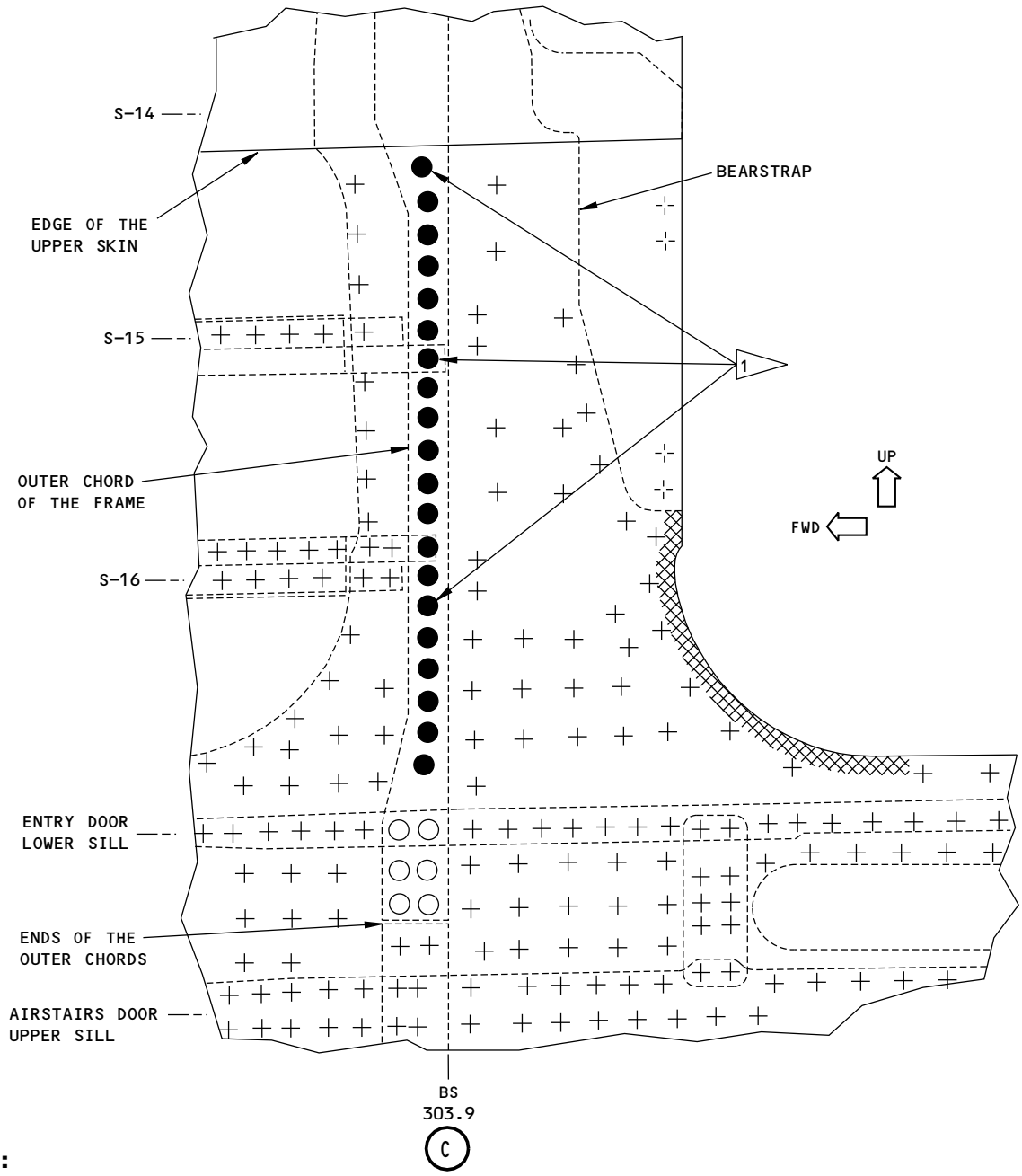

NOTES:

- THE NUMBER OF FASTENERS BETWEEN THE S-14 AND LOWER SILL CAN BE DIFFERENT THAN THAT SHOWN ABOVE.

○ ● FASTENERS TO BE EXAMINED AS SPECIFIED IN PAR. 5.A. REFER TO THE CALIBRATION TABLE IN FIGURE 3, DETAIL II, FOR THE CALIBRATION DATA.

EXAMINE ALONG THE EDGE OF THE DOOR CUTOUT AS SPECIFIED IN PAR. 5.B.

1 THIS FASTENER LOCATION CAN BE A 0.25 INCH (6.4 mm) DIAMETER FASTENER FOR SOME AIRPLANES

2160060 S0000472286_V2

Inspection Areas
Figure 1 (Sheet 4 of 9)

BOEING PROPRIETARY - Copyright © Unpublished Work - See title page for details

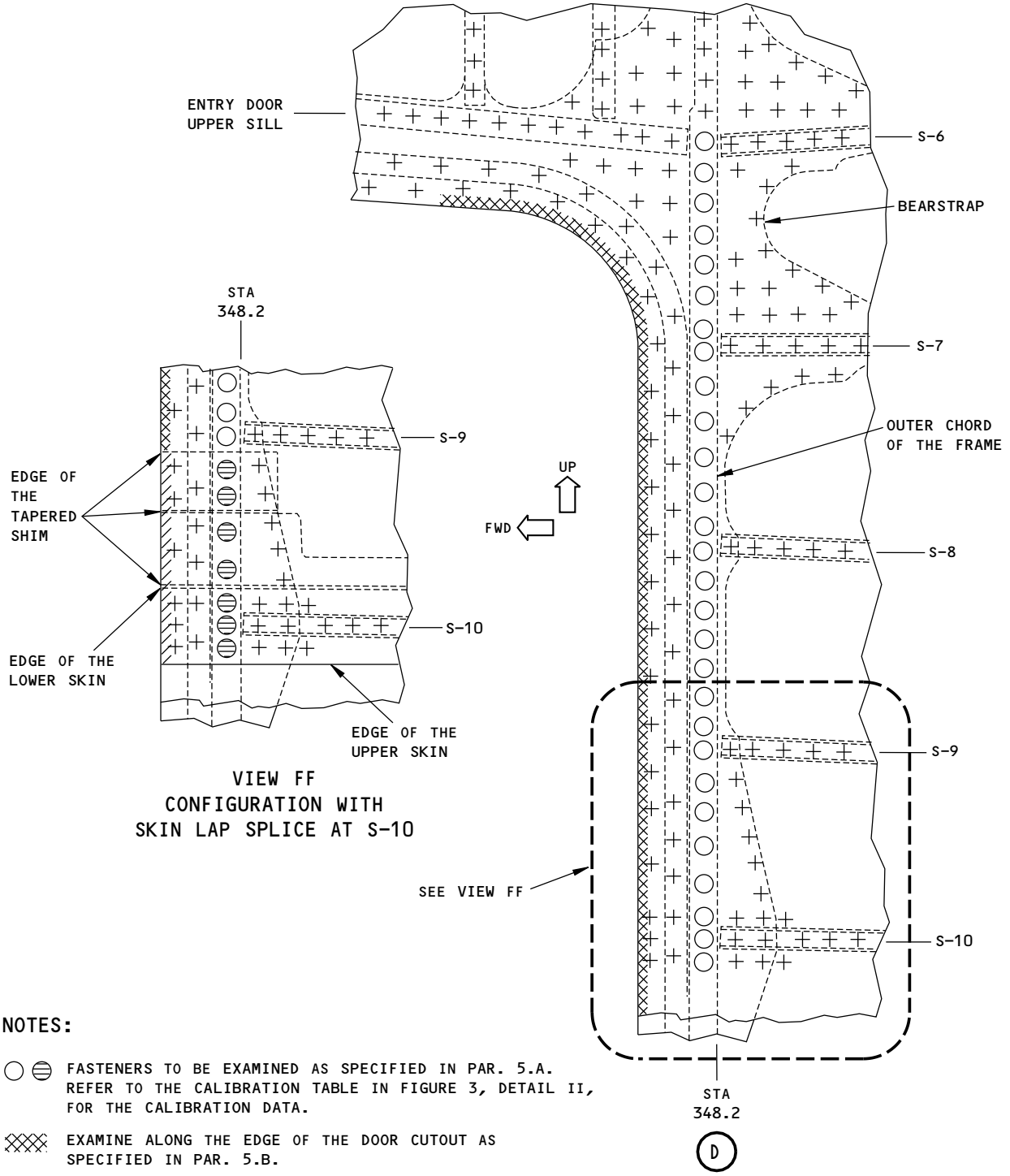

NOTES:

FASTENERS TO BE EXAMINED AS SPECIFIED IN PAR. 5.A. REFER TO THE CALIBRATION TABLE IN FIGURE 3, DETAIL II, FOR THE CALIBRATION DATA.

EXAMINE ALONG THE EDGE OF THE DOOR CUTOUT AS SPECIFIED IN PAR. 5.B.

EXAMINE ALONG THE EDGE OF THE DOOR CUTOUT AS SPECIFIED IN PAR. 5.B. FOR LAP SPLICE AREAS.

2160061 S0000472287_V2

Inspection Areas
Figure 1 (Sheet 5 of 9)

BOEING PROPRIETARY - Copyright © Unpublished Work - See title page for details

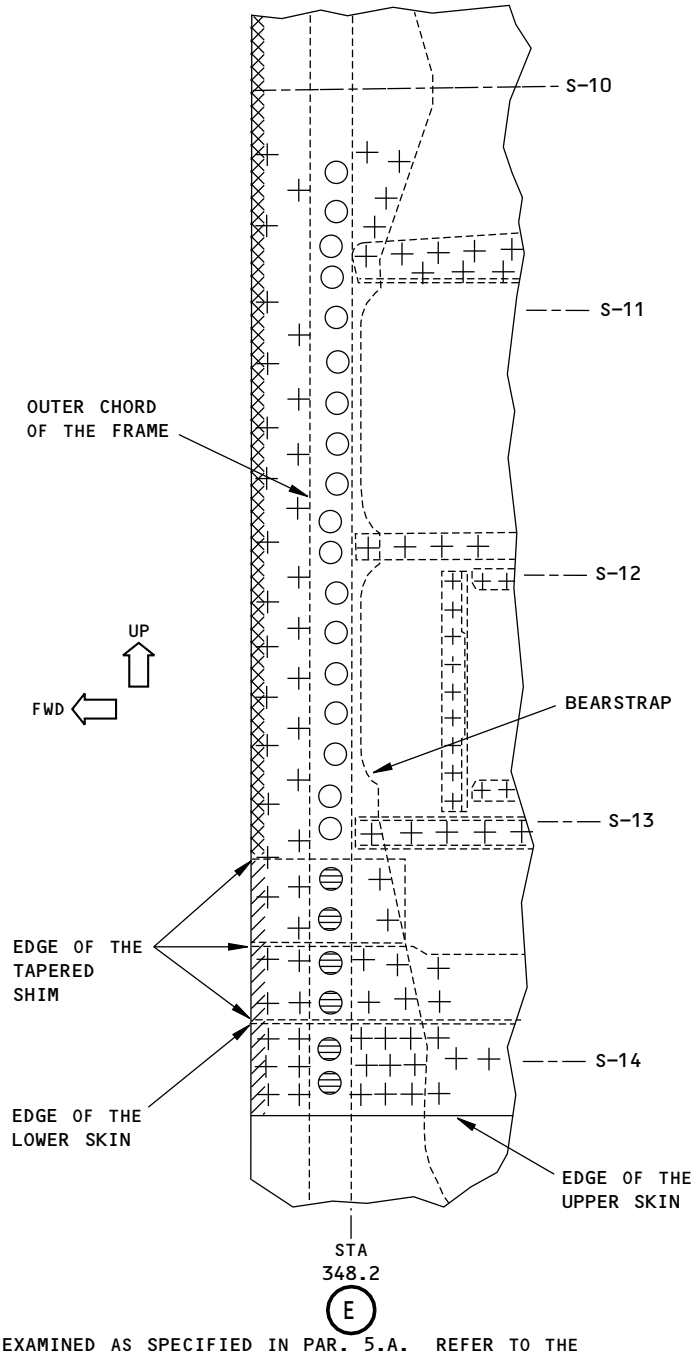

NOTES:

FASTENERS TO BE EXAMINED AS SPECIFIED IN PAR. 5.A. REFER TO THE CALIBRATION TABLE IN FIGURE 3, DETAIL II, FOR THE CALIBRATION DATA.

EXAMINE ALONG THE EDGE OF THE DOOR CUTOUT AS SPECIFIED IN PAR. 5.B.

EXAMINE ALONG THE EDGE OF THE DOOR CUTOUT AS SPECIFIED IN PAR. 5.B. FOR LAP SPLICE AREAS.

2160065 S0000472288_V2

Inspection Areas
Figure 1 (Sheet 6 of 9)

BOEING PROPRIETARY - Copyright © Unpublished Work - See title page for details

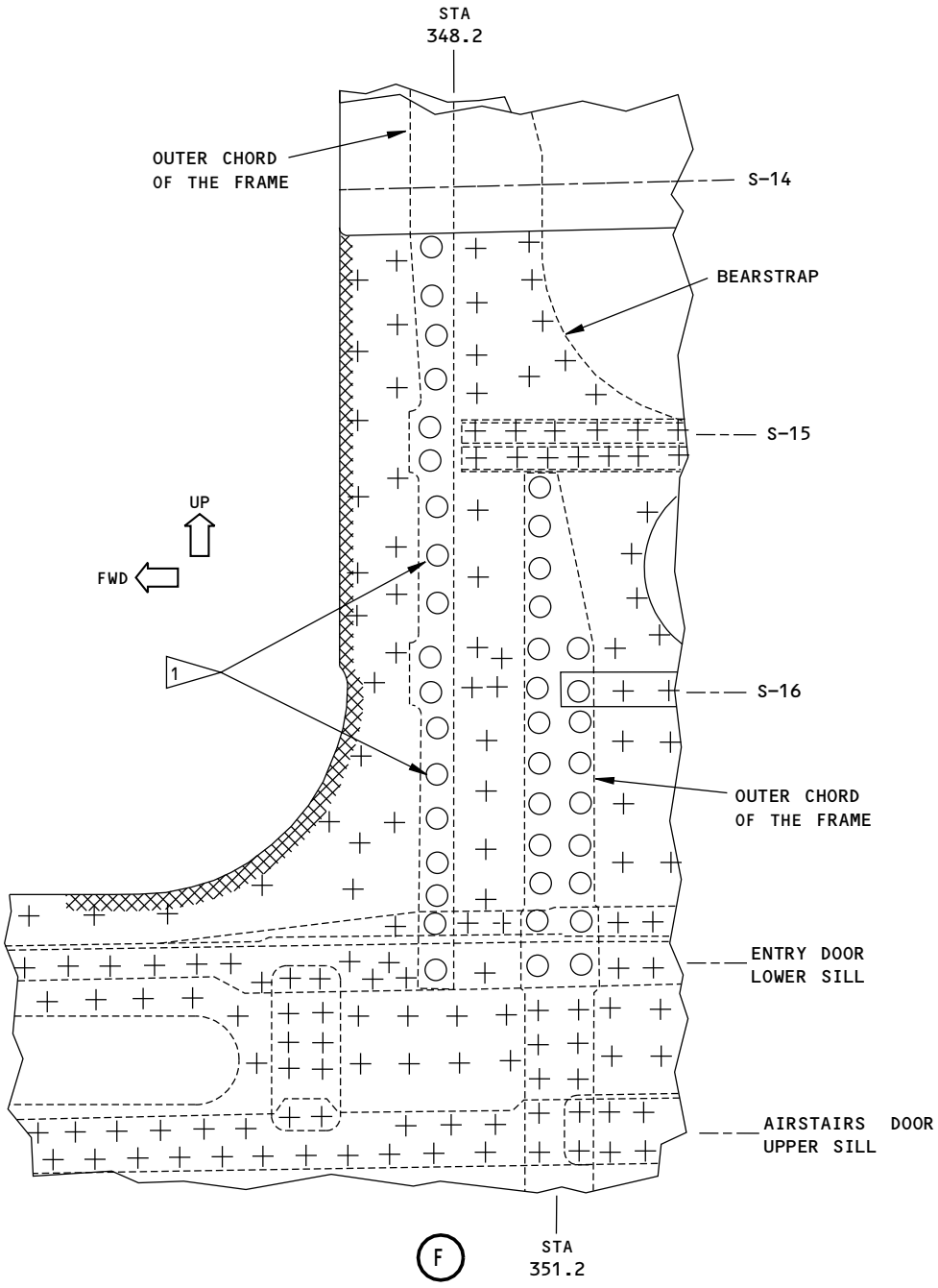

NOTES:

○ FASTENERS TO BE EXAMINED AS SPECIFIED IN PAR. 5.A. REFER TO THE CALIBRATION TABLE IN FIGURE 3, DETAIL II, FOR THE CALIBRATION DATA.

EXAMINE ALONG THE EDGE OF THE DOOR CUTOUT AS SPECIFIED IN PAR. 5.B.

1 THIS FASTENER LOCATION CAN BE A 0.25 INCH (6.4 mm) DIAMETER FASTENER FOR SOME AIRPLANES

2160066 S0000472289_V2

Inspection Areas
Figure 1 (Sheet 7 of 9)

BOEING PROPRIETARY - Copyright © Unpublished Work - See title page for details

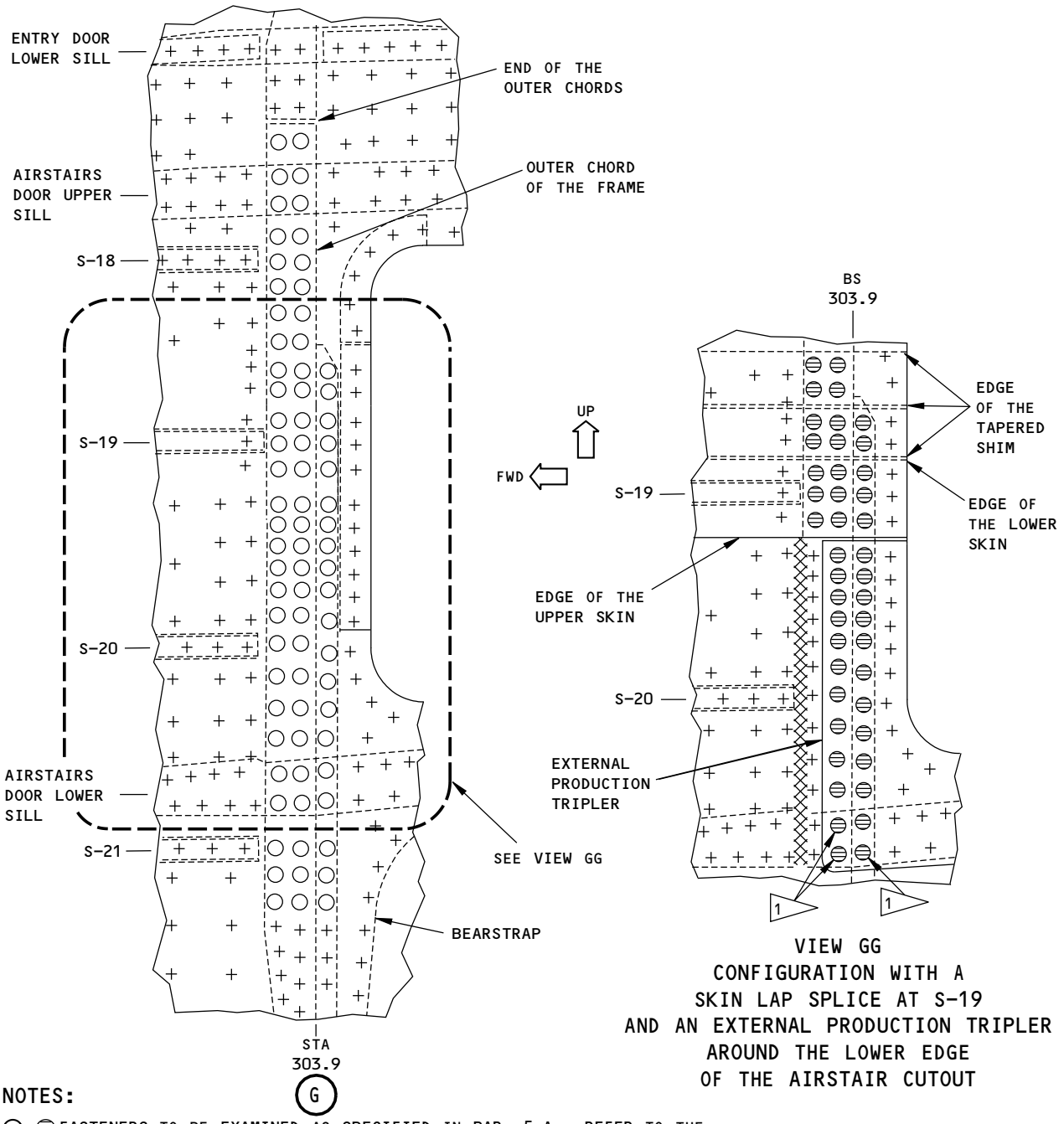

NOTES:

○ ⊖ FASTENERS TO BE EXAMINED AS SPECIFIED IN PAR. 5.A. REFER TO THE CALIBRATION TABLE IN FIGURE 3, DETAIL II, FOR THE CALIBRATION DATA.

MAKE A SCAN ALONG THE FORWARD EDGE OF THE FASTENER ROW THAT IS ADJACENT TO THE EDGE OF THE TRIPLER. REMOVE SEALANT ALONG THE EDGE AND EXAMINE AS SPECIFIED IN PAR. 5.B.

1 THIS FASTENER LOCATION CAN BE A 0.25 INCH (6.4 mm) DIAMETER FASTENER FOR SOME AIRPLANES

2160076 S0000472290_V2

Inspection Areas
Figure 1 (Sheet 8 of 9)

BOEING PROPRIETARY - Copyright © Unpublished Work - See title page for details

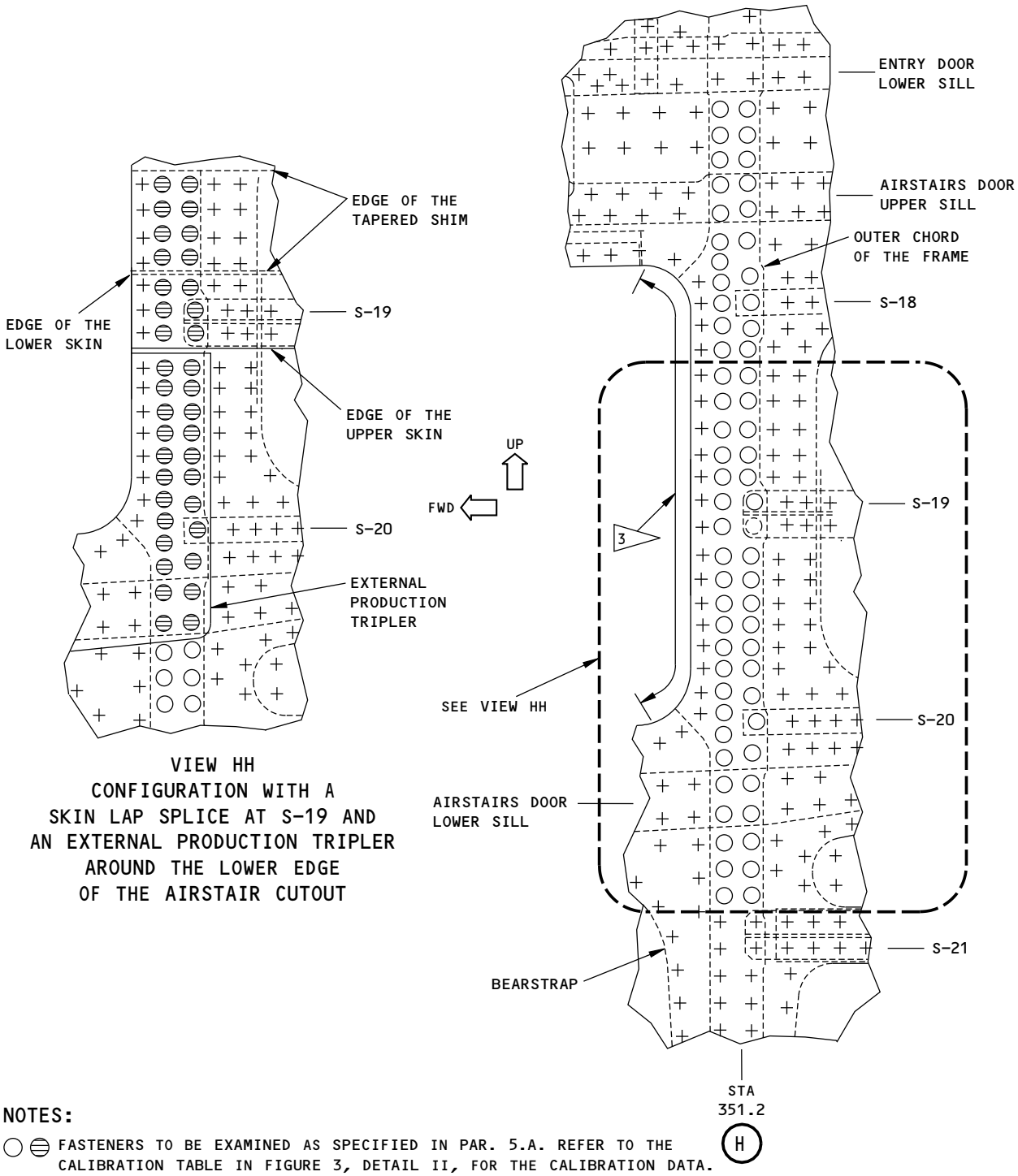

NOTES:

○ ⊖ FASTENERS TO BE EXAMINED AS SPECIFIED IN PAR. 5.A. REFER TO THE CALIBRATION TABLE IN FIGURE 3, DETAIL II, FOR THE CALIBRATION DATA.

3 DO A SURFACE INSPECTION ALONG THE FORWARD EDGE OF THE BEARSTRAP AS SPECIFIED IN PAR. 5.C.

2160078 S0000472291_V2

Inspection Areas
Figure 1 (Sheet 9 of 9)

BOEING PROPRIETARY - Copyright © Unpublished Work - See title page for details

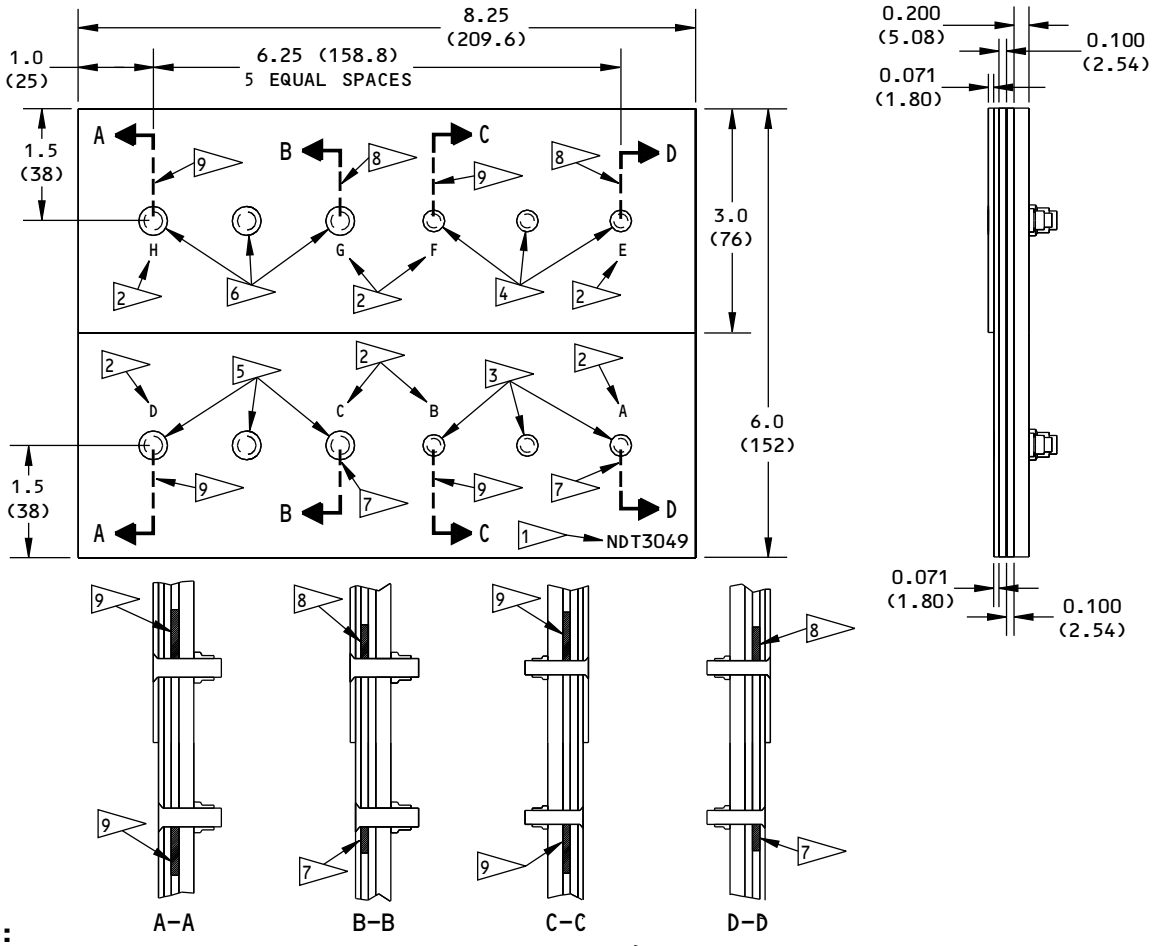

NOTES:

- ALL DIMENSIONS ARE IN INCHES (MILLIMETERS ARE IN PARENTHESES)
- TOLERANCE (UNLESS SPECIFIED DIFFERENTLY):

INCHES	MILLIMETERS
X.XXX = ±0.005	X.XX = ±0.1
X.XX = ±0.025	X.X = ±0.5
X.X = ±0.050	X = ±1

- NOTCH LOCATION TOLERANCE:

  THE NOTCH LOCATION MUST BE WITHIN ±0.005 (±0.10) OF THE CENTERLINE OF THE HOLE AS SHOWN.
- SURFACE ROUGHNESS: 63 Ra OR BETTER
- MATERIAL: 2024-T3 OR T4 ALUMINUM (CLAD)

1 ETCH OR STEEL STAMP THE REFERENCE STANDARD NUMBER NDT3049

2 ETCH OR STEEL STAMP THE LETTER SHOWN TO IDENTIFY THE FASTENER LOCATION TO USE FOR THE INSTRUMENT CALIBRATION. MAKE SURE THE LETTER DOES NOT EXTEND ABOVE THE SURFACE.

3 FASTENER: BACB30FN6A8
COLLAR: BACC30M6

4 FASTENER: BACB30FN6A9
COLLAR: BACC30M6

5 FASTENER: BACB30FN8A8
COLLAR: BACC30M8

6 FASTENER: BACB30FN8A9
COLLAR: BACC30M8

7 EDM NOTCH:
LENGTH: 0.350 (8.89) ±0.010 (0.25)
DEPTH: THROUGH THICKNESS
WIDTH: 0.007 (0.18) ±0.002 (0.05)

8 EDM NOTCH:
LENGTH: 0.450 (11.43) ±0.010 (0.25)
DEPTH: THROUGH THICKNESS
WIDTH: 0.007 (0.18) ±0.002 (0.05)

9 EDM NOTCH:
LENGTH: 0.650 (16.51) ±0.010 (0.25)
DEPTH: THROUGH THICKNESS
WIDTH: 0.007 (0.18) ±0.002 (0.05)

2160084 S0000472292_V1

Reference Standard NDT3049
Figure 2

BOEING PROPRIETARY - Copyright © Unpublished Work - See title page for details

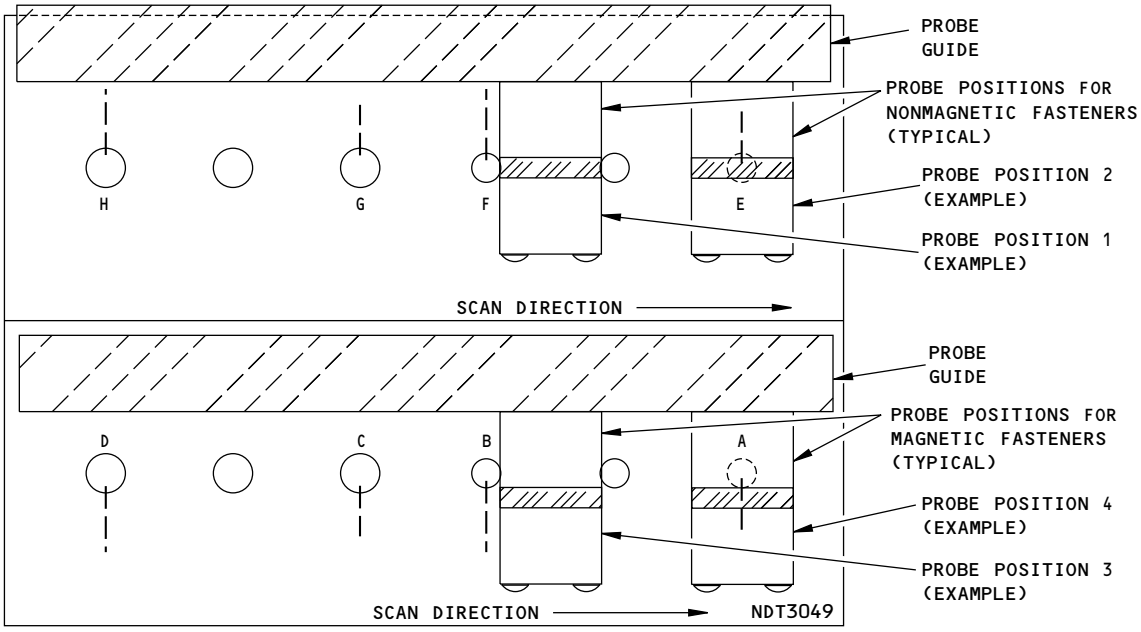

SLIDING PROBE POSITIONS FOR INSTRUMENT CALIBRATION
DETAIL I

FASTENER LOCATION TO EXAMINE (FASTENER CODE)	FASTENER LOCATION ON THE REFERENCE STANDARD	INSTRUMENT FREQUENCY (KHz)
○	A (#6 FASTENER) C (#8 FASTENER)	3.0
●	B (#6 FASTENER) D (#8 FASTENER)	0.8
▤	E (#6 FASTENER) G (#8 FASTENER)	1.0
▨	F (#6 FASTENER)	0.5
▦	H (#8 FASTENER)	0.5

CALIBRATION TABLE
DETAIL II

NOTES:

- TO EXAMINE NONMAGNETIC FASTENER LOCATIONS, THE PROBE SPACER MUST BE ALIGNED WITH THE CENTERLINE OF THE ROW OF FASTENERS AS SHOWN BY PROBE POSITIONS 1 AND 2. PROBE POSITION 1 IS THE BALANCE POINT LOCATION FOR THE "E" FASTENER LOCATION. PROBE POSITION 2 IS THE INSPECTION LOCATION FOR THE "E" FASTENER LOCATION.
- TO EXAMINE MAGNETIC FASTENER LOCATIONS, THE PROBE SPACER MUST BE AT THE EDGE OF THE FASTENER AS SHOWN BY PROBE POSITIONS 3 AND 4. PROBE POSITION 3 IS THE BALANCE POINT LOCATION FOR THE "A" FASTENER LOCATION. PROBE POSITION 4 IS THE INSPECTION LOCATION FOR THE "A" FASTENER LOCATION.
- REFER TO THE INSPECTIONS AREAS IN FIGURE 1 FOR THE FASTENER SYMBOLS TO EXAMINE. REFER TO THE CALIBRATION TABLE, DETAIL II, TO IDENTIFY WHICH FASTENER LOCATION ON THE REFERENCE STANDARD TO USE DURING CALIBRATION AND THE INSTRUMENT FREQUENCY TO USE.

2160085 S0000472293_V1

Instrument Calibration for Chord/Bearstrap Fastener Locations with an Adjustable Sliding Probe
Figure 3 (Sheet 1 of 3)

BOEING PROPRIETARY - Copyright © Unpublished Work - See title page for details

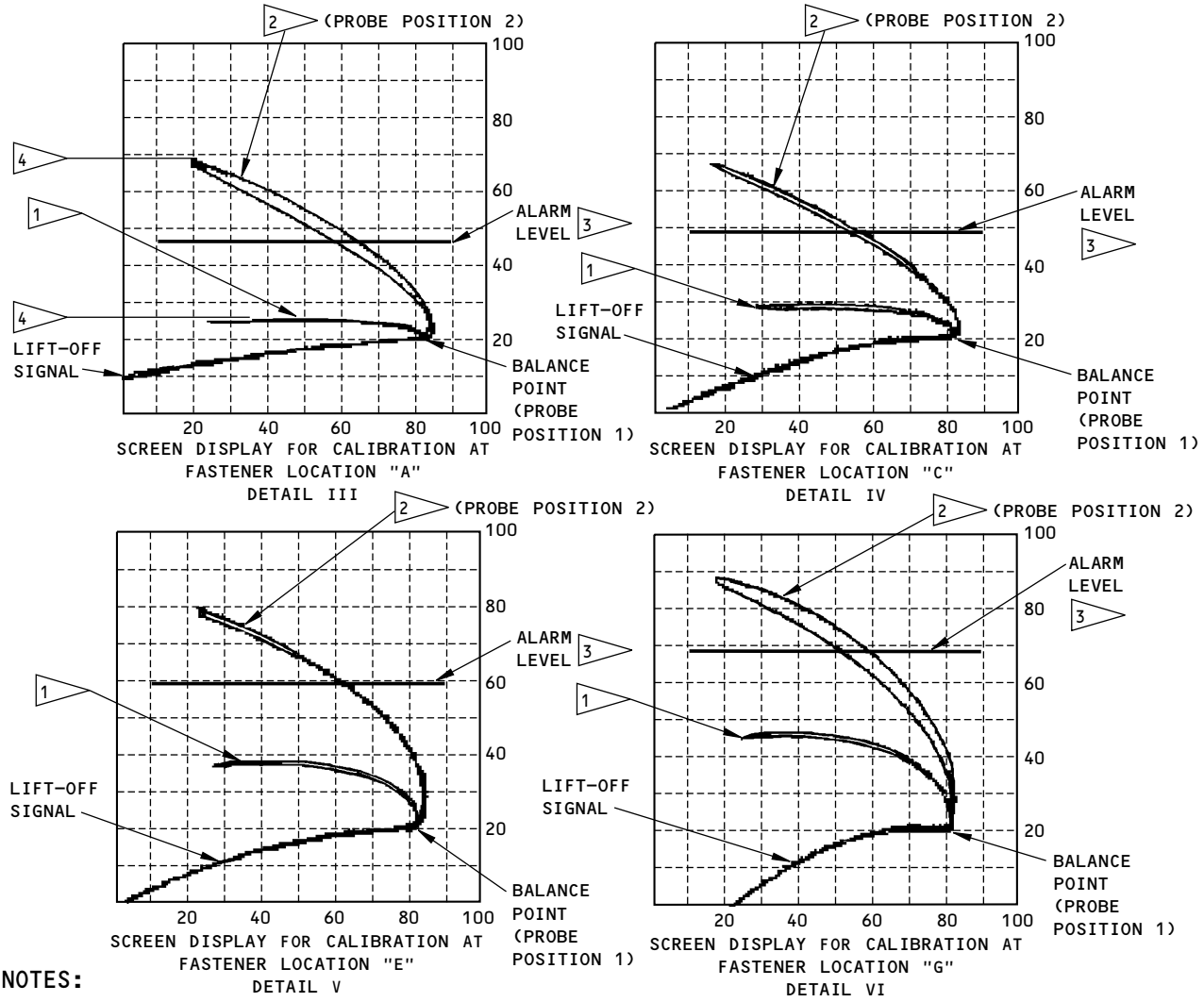

NOTES:

- THE SCREEN DISPLAYS SHOWN IN DETAILS III THRU X ARE EXAMPLES WITH NONMAGNETIC FASTENERS IN THE REFERENCE STANDARD. DIFFERENT INSTRUMENTS AND PROBES CAN CAUSE THE SIGNALS TO LOOK DIFFERENT. MAGNETIC FASTENERS WILL CAUSE THE SIGNALS TO LOOK DIFFERENT THAN THOSE DISPLAYED IN DETAILS III THRU X.
- GET A MINIMUM SEPARATION OF 30% OF FSH BETWEEN THE SIGNAL FROM THE FASTENER LOCATION WITHOUT A NOTCH AND THE SIGNAL FROM THE FASTENER LOCATION WITH THE NOTCH.

1 SIGNAL OF THE FASTENER LOCATION WITHOUT THE NOTCH.

2 SIGNAL OF THE FASTENER LOCATION WITH THE NOTCH.

3 THE ALARM LEVEL IS SET AT 50% OF THE SEPARATION BETWEEN THE TOP OF THE SIGNAL FROM THE FASTENER LOCATION WITHOUT THE NOTCH AND THE TOP OF THE SIGNAL OF THE FASTENER LOCATION WITH THE NOTCH. SEE DETAIL III FOR AN EXAMPLE: MAXIMUM SIGNAL OF THE FASTENER LOCATION WITHOUT THE NOTCH = 27% OF FSH (FULL SCREEN HEIGHT), MAXIMUM FASTENER SIGNAL OF THE FASTENER HOLE LOCATION WITH THE NOTCH = 69% OF FSH. THE SEPARATION BETWEEN THE TWO SIGNALS = 42% OF FSH. SO, 50% OF THE SEPARATION IS 21% OF FSH. THE REJECT LEVEL IN THE DETAIL III SCREEN DISPLAY IS 48% OF FSH (27% OF FSH + 21% OF FSH).

4 MAXIMUM SIGNAL HEIGHT. THE MAXIMUM SIGNAL HEIGHT IS THE POINT AT WHICH THE SIGNAL IS THE HIGHEST ON THE SCREEN DISPLAY. (TYPICAL FOR ALL SCREEN DISPLAYS, DETAILS III THRU X).

INSTRUMENT CALIBRATION FOR THE BEARSTRAP INSPECTIONS 2160089 S0000472294_V1

Instrument Calibration for Chord/Bearstrap Fastener Locations with an Adjustable Sliding Probe
Figure 3 (Sheet 2 of 3)

BOEING PROPRIETARY - Copyright © Unpublished Work - See title page for details

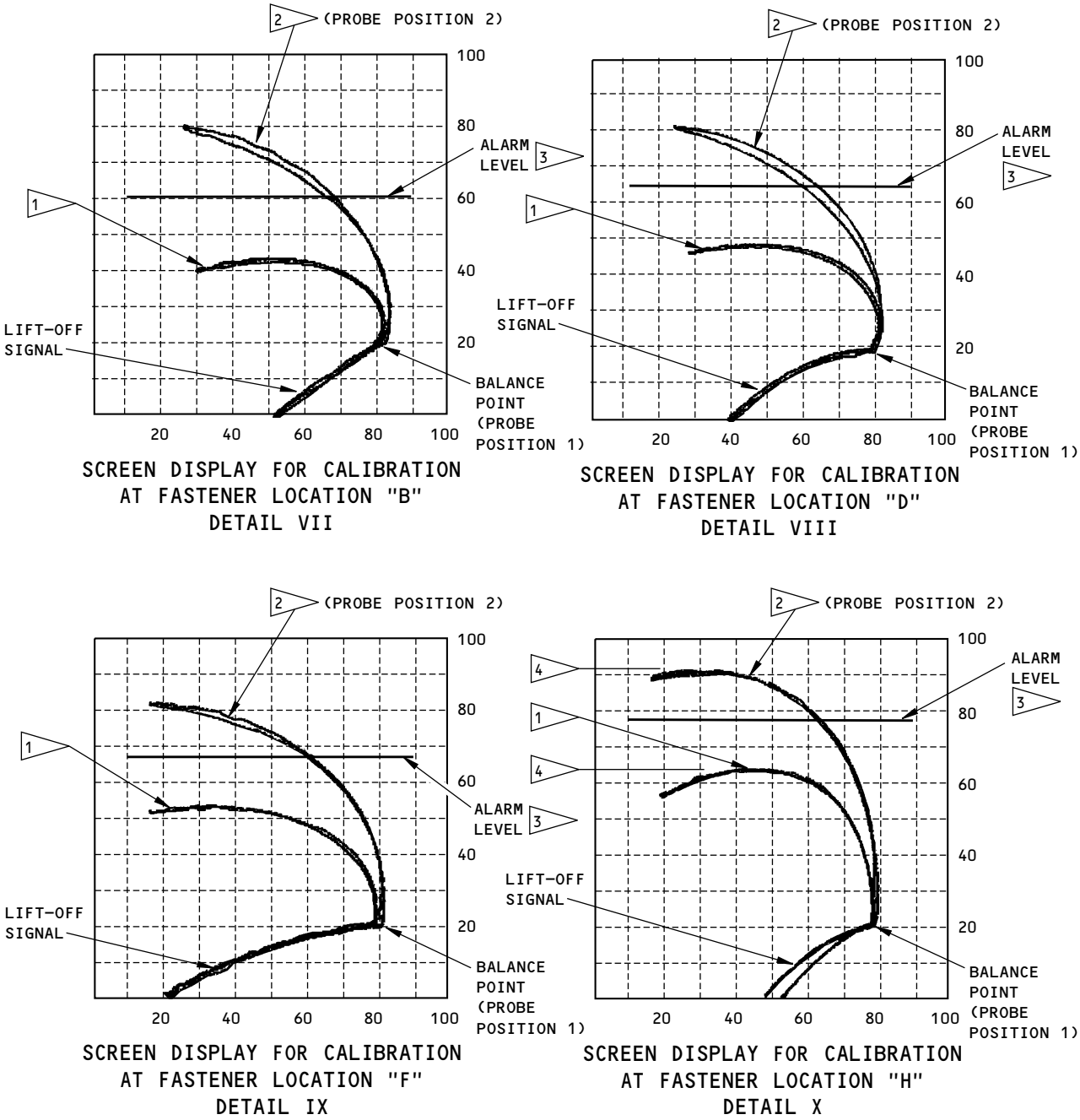

INSTRUMENT CALIBRATION FOR THE BEARSTRAP AND CHORD LOCATIONS

2160093 S0000472295_V1

Instrument Calibration for Chord/Bearstrap Fastener Locations with an Adjustable Sliding Probe
Figure 3 (Sheet 3 of 3)

BOEING PROPRIETARY - Copyright © Unpublished Work - See title page for details

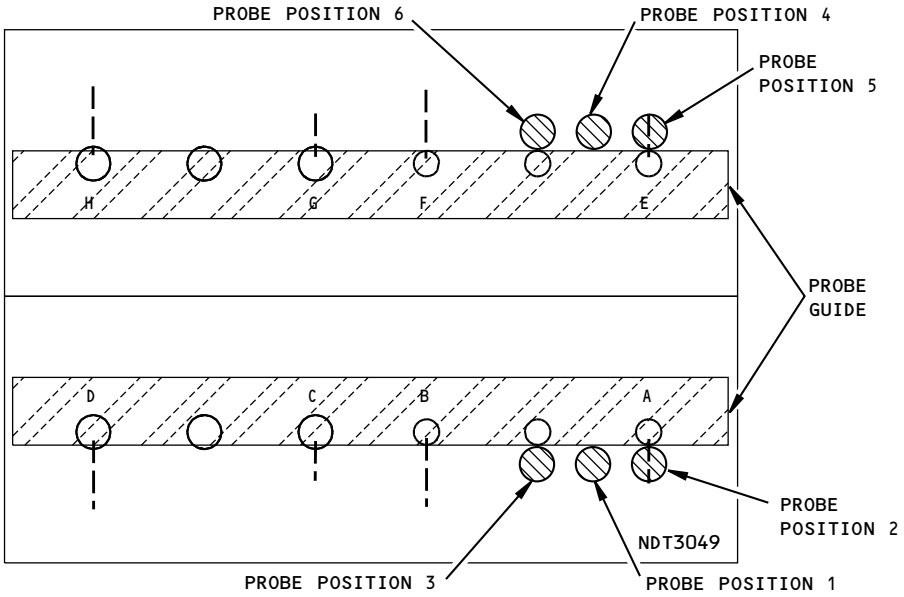

SPOT PROBE POSITIONS FOR INSTRUMENT CALIBRATION
DETAIL I

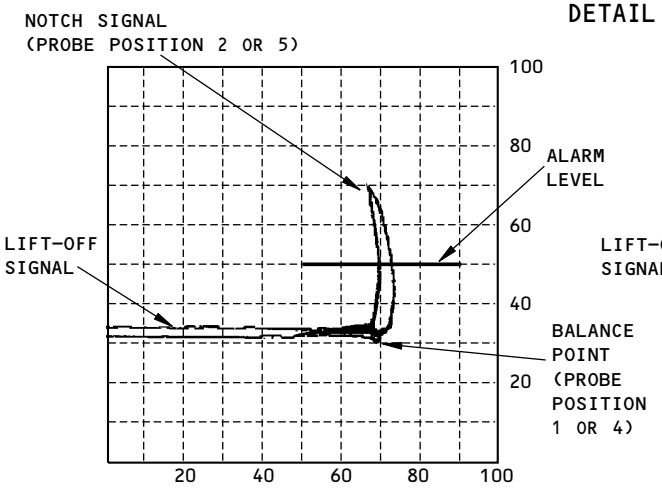

SCREEN DISPLAY FOR CALIBRATION
WITH SPOT PROBE
DETAIL II

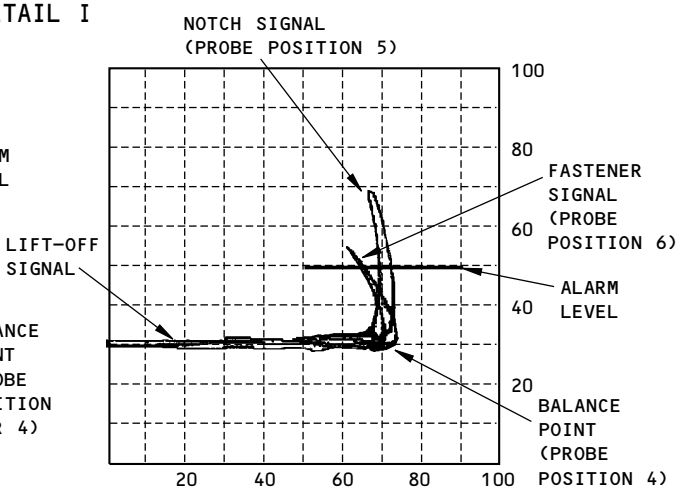

SCREEN DISPLAY OF THE NOTCH SIGNAL
WITH A SIGNAL FROM THE FASTENER AT
PROBE POSITION 6
DETAIL III

NOTES:

- SPOT PROBE POSITIONS 1 THRU 3 ARE USED TO CALIBRATE THE INSTRUMENT TO EXAMINE THE AREAS THAT HAVE A SINGLE SKIN/DOUBLER THICKNESS. SEE THE AREAS IDENTIFIED AS ⧖ IN FIGURE 1.
- SPOT PROBE POSITIONS 4 THRU 6 ARE USED TO CALIBRATE THE INSTRUMENT TO EXAMINE THE AREAS AT LAP SPLICE LOCATIONS AND/OR AREAS THAT HAVE A 0.071 INCH (1.80 MM) THICK DOUBLER ON THE SKIN. SEE THE AREAS IDENTIFIED AS ⧸⧸⧸⧸ IN FIGURE 1.
- THE SCREEN DISPLAY IN DETAIL III SHOWS AN EDGE EFFECT SIGNAL FROM THE FASTENER. THIS ONLY OCCURS AT THE LAP SPLICE LOCATIONS AND/OR AREAS THAT HAVE A 0.071 INCH (1.80 MM) THICK DOUBLER ON THE SKIN.
- THE SCREEN DISPLAYS SHOWN IN DETAILS II AND III ARE EXAMPLES. DIFFERENT INSTRUMENTS AND PROBES CAN CAUSE DIFFERENT DISPLAYS TO OCCUR. TO MAKE SURE THERE IS SUFFICIENT SEPARATION BETWEEN THE FASTENER AND THE NOTCH SIGNALS, DO NOT USE MORE THAN 6 dB OF VERTICAL GAIN HIGHER THAN THE HORIZONTAL GAIN.

2160136 S0000472296_V1

Instrument Calibration for the Edge of the Door Cutout
Figure 4

BOEING PROPRIETARY - Copyright © Unpublished Work - See title page for details

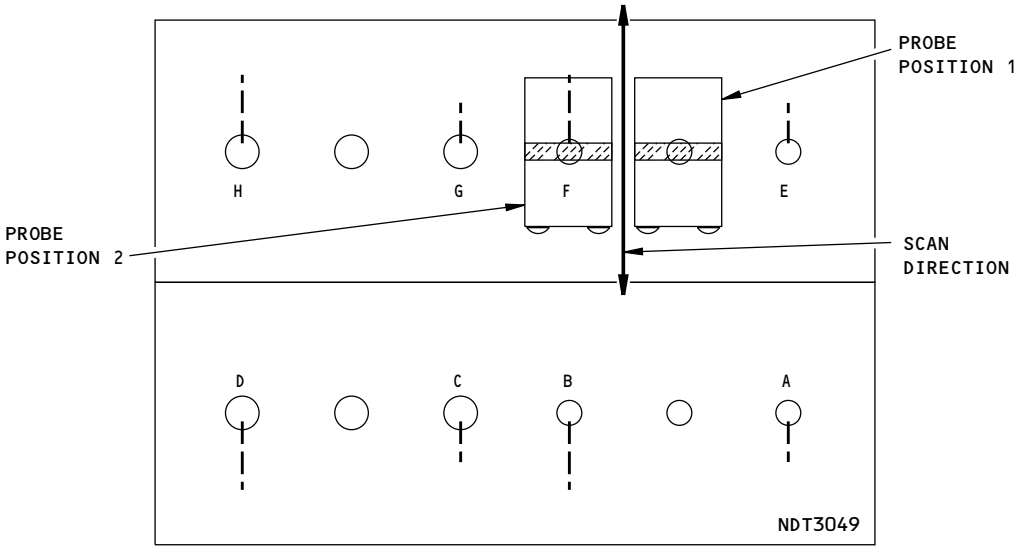

SLIDING PROBE POSITIONS TO DO A 90 DEGREE SCAN
DETAIL I

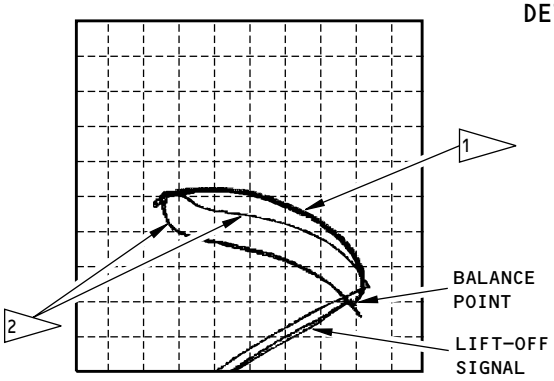

SCREEN DISPLAY OF THE FASTENER SIGNAL
WITHOUT THE NOTCH - PROBE POSITION 1
DETAIL II

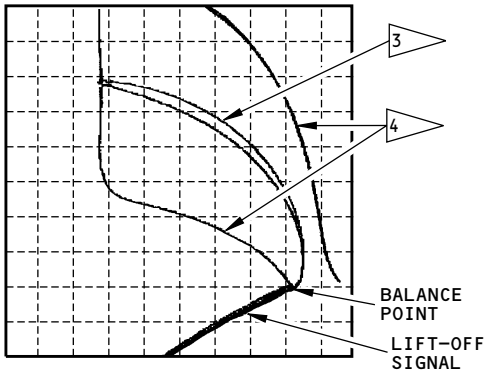

SCREEN DISPLAY OF THE FASTENER SIGNAL
WITH THE NOTCH - PROBE POSITION 2
DETAIL III

NOTES:

- THE SCREEN DISPLAYS SHOWN IN DETAILS II AND III ARE EXAMPLES ONLY TO SHOW THE DIFFERENCE OF SIGNALS WHEN THE PROBE IS SCANNED ABOVE THE FASTENER AS SHOWN ABOVE IN DETAIL I. THE SIGNALS SHOWN IN DETAILS II AND III ARE FROM THE SAME FASTENER LOCATIONS AND WILL LOOK DIFFERENT AT OTHER FASTENER LOCATIONS. OTHER INSTRUMENTS AND PROBES CAN CAUSE THE SIGNALS TO LOOK DIFFERENT. MAGNETIC FASTENERS WILL CAUSE THE SIGNALS TO LOOK DIFFERENT THAN THOSE DISPLAYED IN DETAILS II AND III.

1 SIGNAL OF THE FASTENER LOCATION WITHOUT THE NOTCH, WITH THE PROBE SCANNED IN THE DIRECTION SHOWN IN FIGURE 3. THIS SIGNAL IS ADDED TO THE ABOVE SCREEN DISPLAY FOR VISUAL REFERENCE ONLY.

2 SIGNAL OF THE FASTENER LOCATION WITHOUT THE NOTCH, WITH THE PROBE SCANNED IN THE DIRECTION SHOWN ABOVE IN DETAIL I. THIS IS IDENTIFIED AS A 90 DEGREE SCAN.

3 SIGNAL OF THE FASTENER LOCATION WITH THE NOTCH, WITH THE PROBE SCANNED IN THE DIRECTION SHOWN IN FIGURE 3. THIS SIGNAL IS ADDED TO THE ABOVE SCREEN DISPLAY FOR VISUAL REFERENCE ONLY.

4 SIGNAL OF THE FASTENER LOCATION WITH THE NOTCH, WITH THE PROBE SCANNED IN THE DIRECTION SHOWN ABOVE IN DETAIL I. THIS IS IDENTIFIED AS A 90 DEGREE SCAN.

2160140 S0000472297_V1

Fastener Signals with the Sliding Probe Scanned in the 90 Degree Direction
Figure 5

BOEING PROPRIETARY - Copyright © Unpublished Work - See title page for details

PART 6 - EDDY CURRENT

BS 727 BULKHEAD - PRIMARY AND FAILSAFE CHORD SKIN AND WEB FLANGES FROM STRINGERS S-18L THRU S-25L AND S-18R THRU S-25R

1. **Purpose**

   A. Use this procedure to do a surface eddy current inspection to find cracks in the primary and failsafe chords and failsafe straps at the BS 727 bulkhead.

   B. This procedure examines the primary and failsafe chords and failsafe straps for cracks between stringers 18 and 25 of the lower lobe.

   C. This procedure uses a pencil probe and an instrument with an impedance plane display or a meter display.

   D. 737 Supplemental Structural Inspection Document (D6-82669) Reference:

      (1) Item: F-29A

      (2) Item: F-29B

2. **Equipment**

   A. General

      (1) Use inspection equipment that can be calibrated on the reference standard as specified in Paragraph 4.

      (2) Refer to Part 1, 51-01-00, for data about the equipment manufacturers.

   B. Instrument

      (1) Use an eddy current instrument that:

         (a) Has an impedance plane display or a meter display.

         (b) Operates at a frequency range of 50 to 500 kHz.

      (2) The instruments that follow were used to help prepare this procedure.

         (a) Phasec 2200, Phasec 2; Hocking

         (b) Nortec 19e, 1000, 2000; Staveley Instruments

         (c) Locator (meter display); Hocking

   C. Probes

      (1) Use a shielded, 0.125 inch (3.18 mm) diameter, straight or angled, pencil probe.

      (2) The probes that follow were used to help prepare this procedure.

         (a) MTF-40; NDT Engineering Corp.

         (b) MTF305-50; NDT Engineering Corp.

   D. Reference Standard

      (1) For meter display instruments, refer to Part 6, 51-00-00, Procedure 4, for reference standard data.

      (2) For impedance plane display instruments, refer to Part 6, 51-00-00, Procedure 23, for reference standard data.

BOEING PROPRIETARY - Copyright © Unpublished Work - See title page for details

3. **Prepare for the Inspection**

   A. Get access to the inspection area from the aft cargo door.

   B. Identify the inspection areas. See Figure 1.

   C. Remove structure and insulation blankets as necessary to get access to the inspection area.

   D. Clean the inspection area. Remove sealant as necessary. Remove paint only if it is loose.

4. **Instrument Calibration**

   A. Calibrate the instrument as specified in Part 6, 51-00-00, Procedure 4 (if a meter display instrument is used) or Part 6, 51-00-00, Procedure 23 (if an impedance plane display instrument is used).

5. **Inspection Procedure**

   A. Calibrate the instrument as specified in Paragraph 4.

   B. Examine the failsafe chord or strap for cracks around each of the fasteners that go through the failsafe chord or strap and the skin (but not at the stringer ties and clips) between S-18 and S-25 at BS 727. See Figure 1.

      (1) Put the probe tip on the primary chord, failsafe chord or strap and do a surface scan around the fastener heads. Use the fastener head or tail as a probe guide. At stringer tie and clip locations, use the stringer tie and clip as a probe guide as shown in Figure 1.

   C. Examine the primary and failsafe chords for cracks around each of the fasteners that go through the flange of the primary and failsafe chords and the web (but not at the vertical stiffener locations or where other structure prevents access to the web flange) between S-18 and S-25 at BS 727. See Figure 1.

      (1) Put the probe tip on the primary chord or failsafe chord web flange and do a surface scan around the fastener heads. Use the fastener head or tail as a probe guide. At stiffener locations or where other structure prevents access to the web flange, do a scan on the heel of the primary chord from within the cargo compartment as shown in Figure 1, flagnote 5.

   D. Refer to the inspection instructions in Part 6, 51-00-00, Procedure 4 (if a meter display instrument is used) or Part 6, 51-00-00, Procedure 23 (if an impedance plane display instrument is used).

6. **Inspection Results**

   A. Refer to the applicable inspection procedure for data to help make an analysis of the inspection results. For instruments with a meter display, refer to Part 6, 51-00-00, Procedure 4, for data to help make an analysis of the inspection results. For instruments with an impedance plane display, refer to Part 6, 51-00-00, Procedure 23, for data to help make an analysis of the inspection results.

BOEING PROPRIETARY - Copyright © Unpublished Work - See title page for details

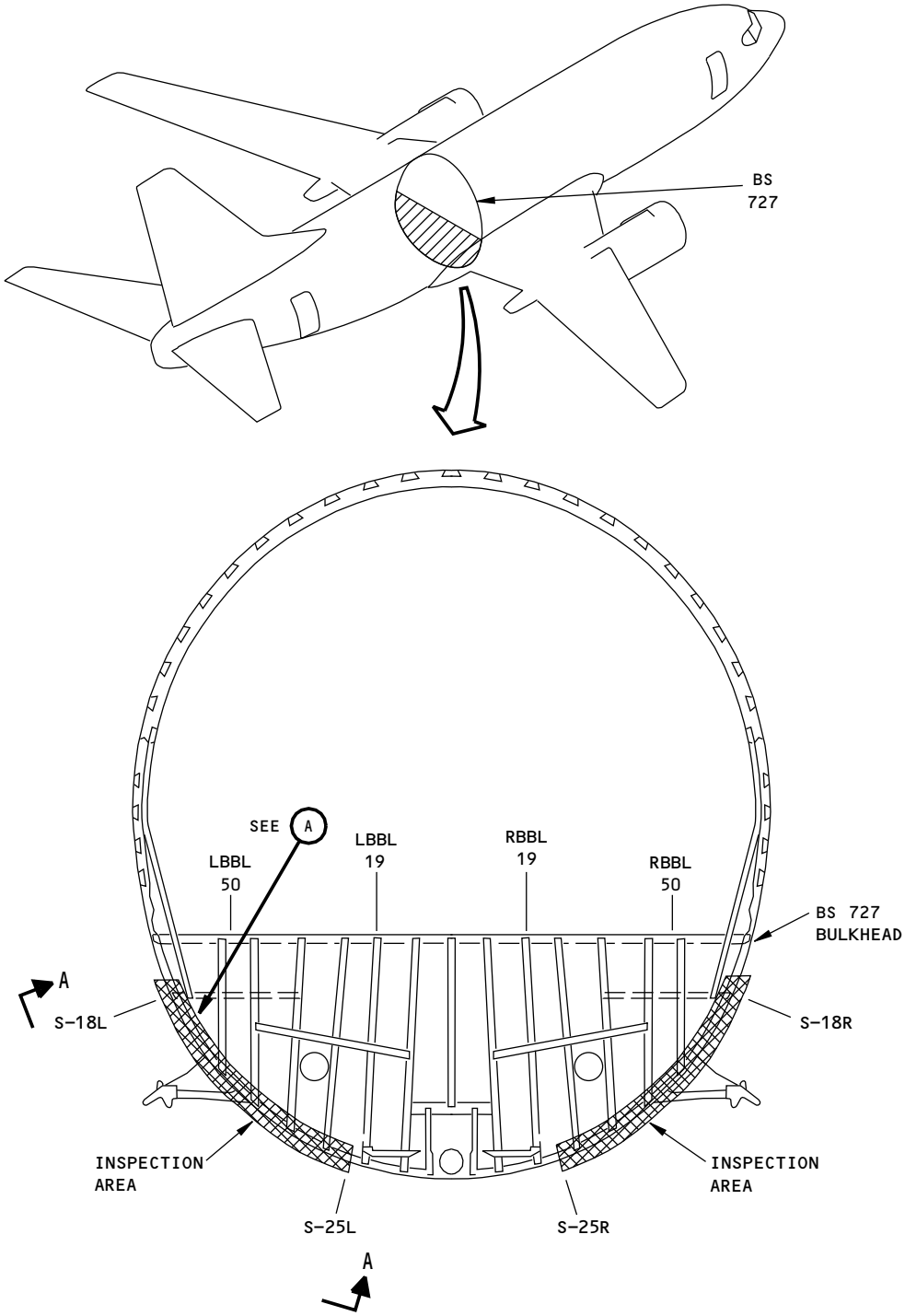

NOTES:

- VIEW AS YOU LOOK FORWARD

2160143 S0000472299_V1

Bulkhead Primary and Failsafe Chord Flange Inspection from Stringers S-18 thru S-25 at BS 727
Figure 1 (Sheet 1 of 4)

BOEING PROPRIETARY - Copyright © Unpublished Work - See title page for details

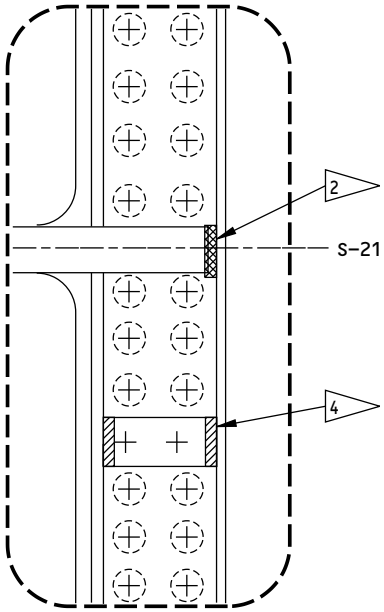

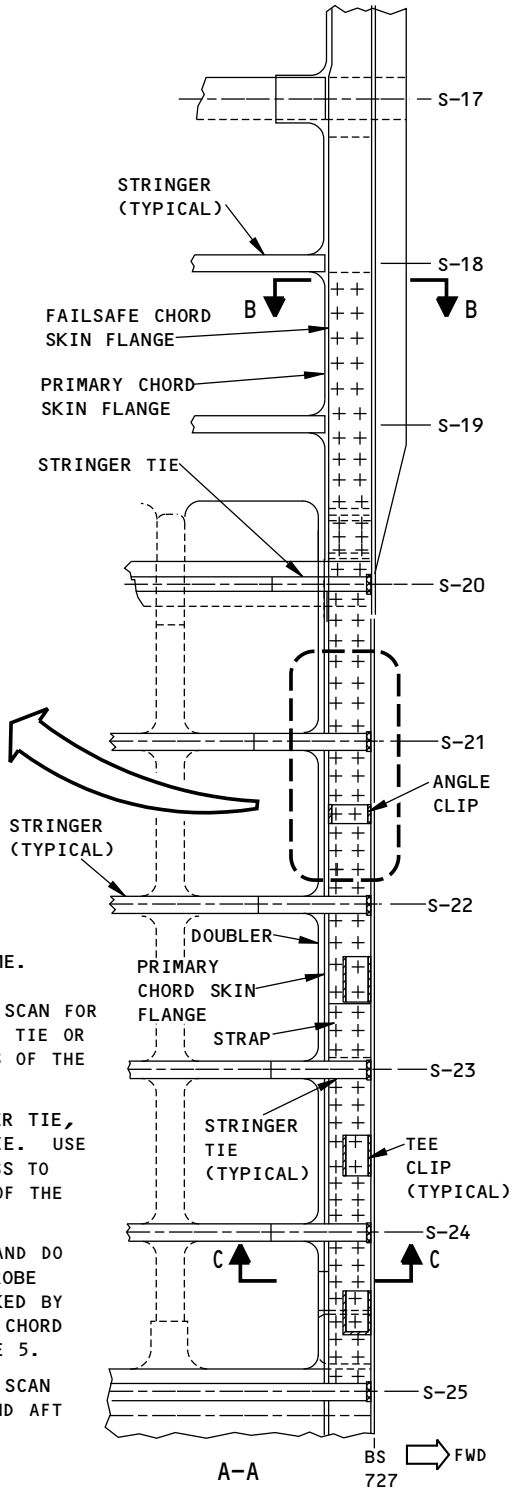

2160146 S0000472300_V1

NOTES:

- THE LEFT SIDE IS SHOWN, THE RIGHT SIDE IS ALMOST THE SAME.

1. PUT THE PROBE ON THE FAILSAFE CHORD OR STRAP AND DO A SCAN FOR CRACKS AROUND EVERY FASTENER THAT IS NOT AT A STRINGER TIE OR CLIP BETWEEN S-18 AND S-25 ON THE RIGHT AND LEFT SIDES OF THE LOWER LOBE. USE THE FASTENER AS A PROBE GUIDE.
2. IF THE FAILSAFE CHORD OR STRAP IS BLOCKED BY A STRINGER TIE, MAKE A SCAN OF THE CHORD AT THE END OF THE STINGER TIE. USE THE STRINGER END AS A GUIDE. IF YOU CAN NOT GET ACCESS TO THIS AREA WITH A PROBE, EXAMINE THE AREA AT THE BASE OF THE WEB FLANGE AND AS NEAR TO THE RADIUS AS POSSIBLE.
3. PUT THE PROBE ON THE PRIMARY CHORD OR FAILSAFE CHORD AND DO A SCAN AROUND EACH FASTENER. USE THE FASTENER AS A PROBE GUIDE. IF THE PRIMARY CHORD OR FAILSAFE CHORD IS BLOCKED BY OTHER STRUCTURE, DO A SCAN OF THE HEEL OF THE PRIMARY CHORD FROM INSIDE THE CARGO COMPARTMENT AS SHOWN BY FLAGNOTE 5.
4. PUT THE PROBE ON THE FAILSAFE CHORD OR STRAP AND DO A SCAN AROUND THE ANGLE CLIPS AND TEE CLIPS AT THE FORWARD AND AFT EDGES. USE THE CLIP AS A PROBE GUIDE.

Bulkhead Primary and Failsafe Chord Flange Inspection from Stringers S-18 thru S-25 at BS 727
Figure 1 (Sheet 2 of 4)

BOEING PROPRIETARY - Copyright © Unpublished Work - See title page for details

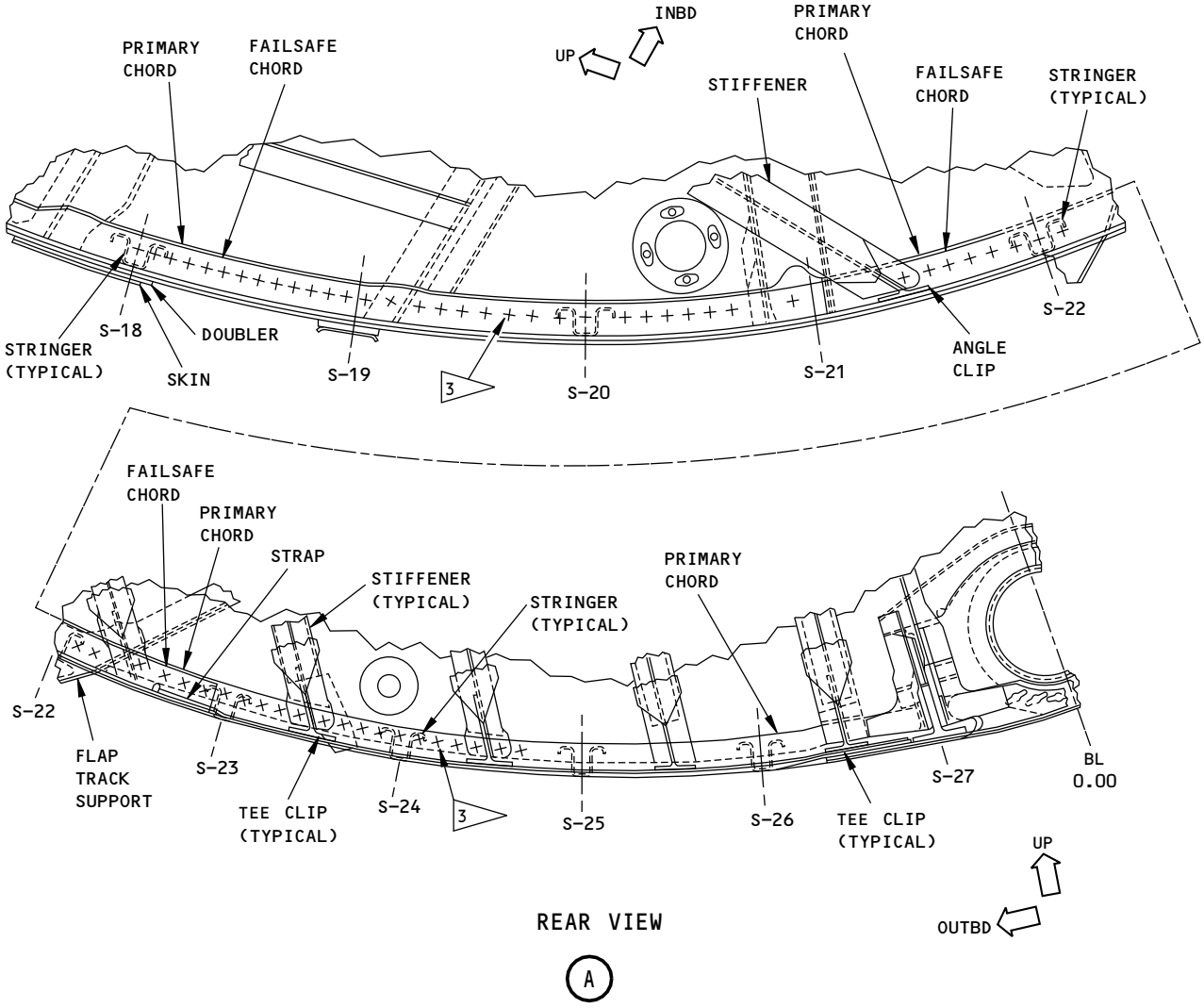

2160147 S0000472301_V1

Bulkhead Primary and Failsafe Chord Flange Inspection from Stringers S-18 thru S-25 at BS 727
Figure 1 (Sheet 3 of 4)

BOEING PROPRIETARY - Copyright © Unpublished Work - See title page for details

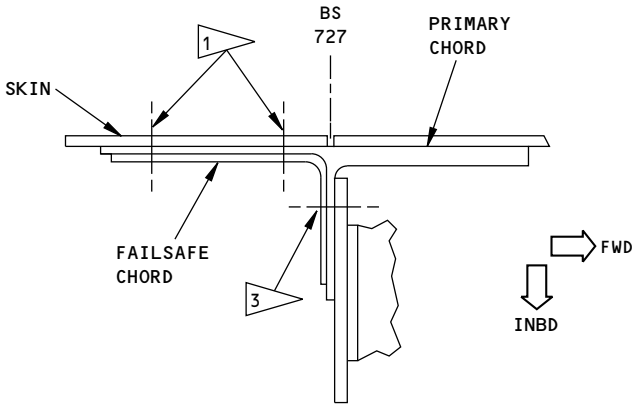

B-B

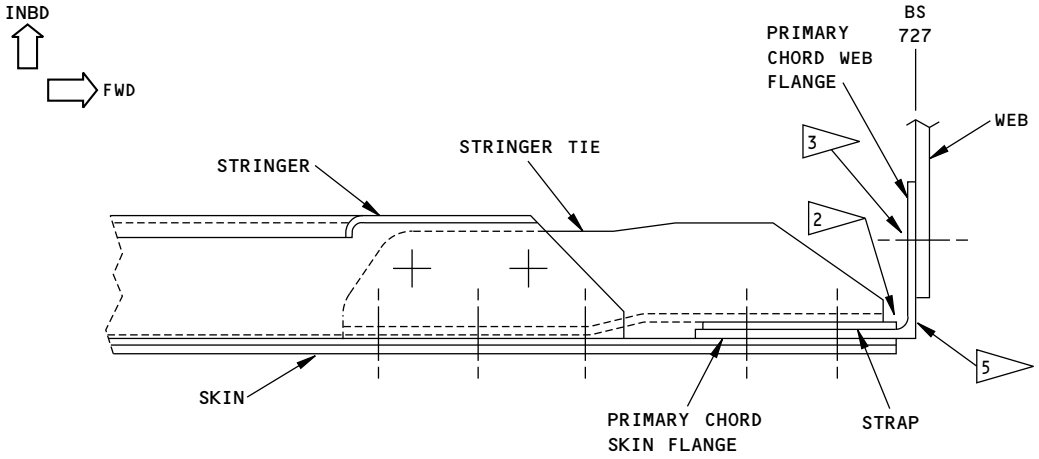

C-C

NOTES:

5 ALTERNATIVE INSPECTION LOCATION IF THE FASTENERS ON THE WEB FLANGE CAN NOT BE EXAMINED AS SPECIFIED IN FLAG NOTE 3.

2160148 S0000472302_V1

Bulkhead Primary and Failsafe Chord Flange Inspection from Stringers S-18 thru S-25 at BS 727
Figure 1 (Sheet 4 of 4)

BOEING PROPRIETARY - Copyright © Unpublished Work - See title page for details

PART 6 - EDDY CURRENT

FORWARD GALLEY DOOR CUTOUT

1. **Purpose**

   A. Use this procedure to do subsurface eddy current inspections to find cracks in the skin, strap and outer chord that surround the forward galley door. This inspection procedure examines the areas that follow:

      (1) The fastener locations at BS 291.5 and BS 332.1 frames, between the upper and lower sills of the forward galley door.

      (2) The fastener locations at all four corners of the door cutout.

      (3) See Figure 1 for the inspection area.

      (4) All the inspections are done with the probe on the outer surface of the skin.

   B. This procedure uses an impedance plane display instrument with the probes that follow:

      (1) Use an adjustable sliding probe to do the subsurface inspections at the fastener locations identified in Paragraph 1.A.(1).

      (2) Use a spot probe to do the subsurface inspections at all corners of the galley door cutout as specified in Paragraph 1.A.(2).

   C. Service Bulletin Reference: 737-53A1200

   D. 737 Supplemental Structural Inspection Document (D6-82669) Reference:

      (1) Item: F-15

2. **Equipment**

   A. General

      (1) Use inspection equipment that can be calibrated on the reference standard as specified in Paragraph 4.

      (2) Refer to Part 1, 51-01-00, for data about the equipment manufacturers.

   B. Instrument

      (1) Use an eddy current instrument that:

         (a) Has an impedance plane display.

         (b) Operates at a frequency range of 1 to 500 kHz.

      (2) The instruments that follow were used to help prepare this procedure.

         (a) Phasec 2200, Phasec 2; Hocking

         (b) Nortec 1000/2000; Staveley Instruments

         (c) Elotest B1; Rohman GmbH

   C. Probes

      (1) Probes for subsurface inspection at the BS 291.5 and BS 332.1 fastener rows:

         (a) Use an adjustable reflection sliding probe that operates at frequencies between 500 Hz and 3 kHz.

            1) The probes that follow were used to help prepare this procedure.

BOEING PROPRIETARY - Copyright © Unpublished Work - See title page for details

a) SPO-1958 with a 0.20 inch (5.1 mm) nonconductive spacer; Staveley Instruments

b) SPO-5251 with a 0.20 inch (5.1 mm) nonconductive spacer; Staveley Instruments

c) NEC-4083 with a 0.20 inch (5.1 mm) nonconductive spacer; NDT Engineering

2) Other adjustable, reflection sliding probes can be used if they can satisfactorily do the calibration instructions specified in this procedure. The spacer thickness can be different with other probes; use a thickness that will give equivalent results to the probes used to help prepare this procedure.

(2) Probes for subsurface inspection at all corners of the door cutout:

(a) Use a spot probe that can operate at 3 kHz and has a maximum diameter of 0.35 inch (8.9 mm). A reflection type probe is recommended.

(b) The probes that follow were used to help prepare this procedure.

1) SPO-5327; Staveley Instruments

2) RS053-1/2; NDT Engineering Corp.

D. Reference Standard

(1) Use reference standard NDT3077 as specified in Figure 2.

E. Special Tools

(1) Use a flexible, nonconductive probe guide to align the probe on the reference standard during calibration and on the airplane during the inspections.

(2) A magnet to identify magnetic type fasteners.

3. Prepare for the Inspection

A. Identify all of the inspection areas. See Figure 1.

B. Do a check of all the fastener locations with a magnet to find and identify magnetic type fasteners on the airplane.

C. Remove the rain gutter at the upper hinge location and scuff plates if necessary.

D. Clean the inspection area.

(1) Remove sealant as necessary. Use care to prevent damage to the surface of the skin if sealant removal is necessary. Refer to the Airplane Maintenance Manual for more instructions if necessary.

(2) Remove paint only if it is loose.

4. Instrument Calibration

A. Calibrate the equipment for the subsurface inspections at the areas identified in Paragraph 1.A.(1) and Paragraph 1.A.(2) as follows:

(1) To examine the fastener locations at the areas identified in Paragraph 1.A.(1) with the adjustable sliding probe, calibrate the instrument as follows:

(a) Identify all the fastener locations that are to be examined on the airplane that are identified in the inspection areas in Figure 1. All the fastener locations are identified as symbols in the Figure 1 inspection areas.

BOEING PROPRIETARY - Copyright © Unpublished Work - See title page for details

(b) Go to the Calibration Table of Detail II in Figure 3 to identify the calibration data (reference standard fastener location and instrument frequency) that will be used to examine the fastener locations in Figure 1 that have the same symbol.

(c) Set the instrument frequency to the frequency specified in the Calibration Table of Detail II in Figure 3 for the fastener symbol to be examined.

(d) Identify the fastener location letter on reference standard NDT3077 that is specified in the Calibration Table of Detail II in Figure 3 for the fastener symbol to be examined.

(e) Put a nonconductive shim or tape on the reference standard if the airplane is painted. Use a shim or tape thickness that is within ±0.003 inch (0.08 mm) of the thickness of the paint.

(f) Put the probe at the “balance point” position of the reference standard to balance the instrument. The correct probe location is identified as follows:

1) Go to the Calibration Table in Figure 3 with the fastener code to be examined (fastener codes are identified in Figure 1) and the fastener size (#6; you need to look at the airplane to know this).

2) Identify the applicable letter (identified as letters A thru D) from the Calibration Table. This letter relates to the letter on the reference standard to use during calibration.

3) Put the probe on the reference standard so that it is adjacent to the fastener that is nearest to the fastener with the letter identified in Paragraph 4.A.(1)(f)2) as follows:

a) The probe must be on the opposite side of the fastener that is adjacent to the fastener with the letter (see Figure 3, probe positions 1 and 3 for examples).

b) Make sure that the fasteners in the reference standard have the same magnetic properties as the fasteners to be examined on the airplane.

<1> Replace the fasteners in the reference standard, as necessary, so that they have the dimensions and magnetic properties of the fasteners to be examined.

c) Align the probe to examine a magnetic or a nonmagnetic fastener as shown in Figure 3. Figure 3 shows examples of the correct probe positions to examine magnetic or nonmagnetic fasteners. In the Figure 3 example, probe position 1 is used to get the balance point for a letter C fastener inspection and probe position 3 is used to get the balance point for a letter A fastener inspection. In the Figure 3 example, probe position 1 is the probe position for a nonmagnetic fastener and probe position 3 is the probe position for a magnetic fastener.

<1> To examine magnetic fasteners, the probe spacer must be aligned with the edge of the fastener holes (as shown by probe position 3 in Figure 3).

<2> To examine nonmagnetic fasteners, the probe spacer must be aligned with the centerline of the fastener holes (as shown by probe position 1 in Figure 3).

NOTE: Probe positions 1 thru 4 shown in Detail I in Figure 3 are examples of the typical positions for all the fastener locations identified as letters A thru D on the reference standard.

(g) Balance the instrument.

(h) Set the balance point in the lower right area of the screen display as shown in Figure 3.

(i) Tilt the probe and adjust the instrument phase control so that the initial lift-off signal goes to the left side of the screen display.

(j) Put the probe guide on the reference standard against the probe and align the probe guide with the fasteners. See Detail I in Figure 3.

BOEING PROPRIETARY - Copyright © Unpublished Work - See title page for details

(k) Move the probe from the “balance point” position to the “inspection fastener” position for the applicable letter identified in Paragraph 4.A.(1)(f)2).

1) Examples of the probe positions are shown in Figure 3. Position 2 shows the probe in a position to examine a nonmagnetic fastener. Position 4 shows the probe in the position to examine a magnetic fastener.

(l) Move the probe backward and forward between the “balance point” position and the “inspection fastener” position, as necessary, while you adjust the instrument gain and phase controls so that the signals from the fastener locations look almost the same as the signals shown on the screen display in Figure 3. Use a vertical gain that is higher than the horizontal gain or a vertical to horizontal gain ratio that will cause the signals to have a minimum separation of 30% of full screen height (FSH).

NOTE: (1) The height of the signal from the fastener location at the “balance point” position and the angular location of the lift-off line are not as important as the 30% of FSH separation between the signals from the “balance point” and the “inspection fastener” positions.

NOTE: (2) It can be necessary to put the balance point at a lower position on the screen display, to get a 30% of FSH separation between the signals from the “balance point” and the “inspection fastener” positions.

(m) Set the alarm as specified in Figure 3, flagnote 3.

(2) To examine the areas identified in Paragraph 1.A.(2), calibrate the instrument with the spot probe as follows:

(a) Set the instrument frequency to 3 kHz.

(b) Put a nonconductive shim or tape on the reference standard if the airplane is painted. Use a shim or tape thickness that is within ±0.003 inch (0.08 mm) of the thickness of the paint.

(c) Put a nonconductive probe guide on the reference standard, with the edge of the probe guide along the edge of the fastener heads, as shown in Detail I in Figure 4.

(d) Put the probe on reference standard NDT3077 at position 1 (see Detail I in Figure 4). Make sure the probe is against the probe guide during the complete calibration.

(e) Balance the instrument.

(f) Adjust the instrument phase control so that the lift-off signal moves horizontally to the left as shown in Detail II in Figure 4.

(g) Set the balance point to the position shown on the screen display in Detail II in Figure 4.

(h) Adjust the instrument sensitivity as follows:

1) Move the probe to probe position 2 on the reference standard, above the notch.

NOTE: The balance point signal will move downward when the probe is moved away from probe position 1 because of the edge effect. The quantity of movement can be more or less with different probes. Do not balance the instrument with the probe away from probe position 1.

2) Add gain as necessary to get the notch signal on the screen display. Move the probe a small quantity on each side of the notch, as necessary, to get the maximum signal.

3) Adjust the instrument sensitivity to put the notch signal at 70% of FSH (40% higher than the balance point). See Detail II in Figure 4.

NOTE: Use more vertical gain than the horizontal gain to get a satisfactory vertical signal. The vertical to horizontal gain ratio must be approximately 2 to 1. Do not use more than 6 dB of vertical gain higher than the horizontal gain.

BOEING PROPRIETARY - Copyright © Unpublished Work - See title page for details

4) Move the probe to probe position 3 (see Detail I in Figure 4) to identify if an edge effect signal occurs from the fastener. An edge effect signal will occur at a different phase angle than the notch signal at probe position 2. If the edge effect signal does not have sufficient separation from the notch signal, use a different probe with better shielding.

(i) Set the alarm as specified in Detail II in Figure 4.

5. Inspection Procedure

A. Examine the fastener locations at the areas identified in Paragraph 1.A.(1) with the adjustable sliding probe as follows:

(1) Identify the fastener locations on the airplane from inspection areas shown in Figure 1.

(2) Calibrate the instrument as specified in Paragraph 4.A.(1) for the fastener symbol identified in Figure 1 that is to be examined.

(3) Put the probe on the outer surface of airplane skin so that it is equally between two fasteners and in the position as shown in View AA of Figure 1. Make sure that the probe is aligned correctly for the type of fastener (magnetic or nonmagnetic) to be examined.

(4) Balance the instrument.

(5) Tilt the probe to do a check of the lift-off signal. It can be necessary to make a small adjustment of the instrument phase control to get the same lift-off signal that you got during calibration.

(6) Do a scan inspection of all the same fastener locations identified in Figure 1 as follows:

(a) For all nonmagnetic fasteners, put the probe guide on the skin so that the center of the probe spacer is aligned with the center of the fastener head. Only one scan is necessary. See View AA of Figure 1 for the probe position on the airplane.

(b) For all magnetic fasteners, put the probe guide on the skin so that the spacer is fully on one side of the fastener head, with the edge of the spacer along the edge of the fastener head. Two scans are necessary, one on each side of the fastener head. See View AA of Figure 1 for the probe position on the airplane.

(c) Monitor the balance point on the screen display at all times for movement away from the balance position. The distance between fasteners can cause the balance point to move.

(d) Monitor the screen display for an increase in the signal height, above the usual fastener location signal. Make a mark, with an approved marker, at all the locations where the signal is above the alarm level. Refer to Paragraph 6., “Inspection Results”, to do more analysis of all the marked fastener locations.

(e) Monitor the screen display for a decrease in the signal height, length and phase angle from the usual fastener location signal. This decrease of the signal occurs when the probe is not aligned with the fastener head. If a fastener location shows a decrease in the signal height, do a scan of the fastener location again, with the probe correctly aligned. It can be necessary to remove paint if the fastener head cannot be seen.

(7) Do Paragraph 5.A.(2) thru Paragraph 5.A.(6) again for the remaining fastener symbols that are to be examined.

B. Examine the areas identified in Paragraph 1.A.(2) with the spot probe as follows:

(1) Identify the inspection areas on the airplane from the inspection areas shown in Figure 1.

(2) Calibrate the instrument as specified in Paragraph 4.A.(2).

(3) Put the probe guide on the inside edge of the door cutout, in an area to be examined as shown in View BB of Figure 1.

BOEING PROPRIETARY - Copyright © Unpublished Work - See title page for details

(4) Put the probe on the outer surface of the airplane skin, in the inspection area between fasteners and with the edge of the probe on the edge of the door cutout and against the probe guide. See View BB of Figure 1 for the typical probe position.

(5) Balance the instrument.

(6) Tilt the probe to do a check of the lift-off signal. It can be necessary to make a small adjustment of the instrument phase control to get the lift-off signal that you got during calibration.

(7) Do a scan of all the inspection areas identified in Figure 1. During the scan:

(a) Make a mark, with an approved marker, at all the locations where the signal is above the alarm level. Refer to Paragraph 6., “Inspection Results”, to do more analysis of all the marked locations.

6. Inspection Results

A. Results of the subsurface inspections at the areas identified in Paragraph 1.A.(1) that are examined with the adjustable sliding probe.

(1) A vertical signal that is equal to, or more than, the alarm level set in Figure 3, flagnote 3, is a sign of a possible crack. Do more analysis of the possible crack signal as follows:

(a) Make sure the fastener type (magnetic or nonmagnetic) and dimension is the same as that used during the calibration. If the fastener is not the same, calibrate the equipment again for the correct fastener and examine the fastener location again. If the possible crack signal is not caused by the fastener, go to Paragraph 6.A.(1)(b).

(b) Monitor the location of the probe compared to the fastener location. A crack at the fastener location will cause a signal to occur as the probe is centered above the fastener. An edge effect signal can occur from the edge of shims or the lower skin, at the lap splices (S-10 and S-14), as the probe is moved near the edge of the shim or lower skin. An edge effect signal will look different than a crack signal, but can go up into the alarm level. Do a scan at the fastener location(s) with the probe 90 degrees to the normal probe direction as shown in View CC of Figure 1, Sheet 3, as follows, to help identify the cause of the signal.

NOTE: Figure 5 shows the probe positions on the reference standard and shows the screen displays of the signals from the fastener locations with and without a notch.

1) Balance the probe between two fasteners as shown in Figure 3, Sheet 1 and move the probe to probe position 1 to get a signal as shown in Detail II, flagnote 1 in Figure 5.

2) Move the probe in the scan direction as shown in Detail I in Figure 5 to get a complete fastener signal as shown in Detail II, flagnote 2 in Figure 5.

3) Do Paragraph 6.A.(1)(b)1) and Paragraph 6.A.(1)(b)2) again, but put the probe at position 2 and refer to flagnote 3 and 4 in Detail III in Figure 5.

a) The probe is not sensitive to the edge of the shim or lower skin when it is scanned in this direction, but the probe will see the edge of the frame outer chord as the probe is moved by the fastener.

b) A crack signal at the fastener location will look almost the same as the signal shown as flagnote 4 in Detail III in Figure 5.

(c) Remove the fastener and do an open hole inspection as specified in Part 6, 51-00-00, Procedure 16, to make sure of the results.

B. Results of the subsurface inspection at the areas identified in Paragraph 1.A.(2) that are examined with the spot probe.

BOEING PROPRIETARY - Copyright © Unpublished Work - See title page for details

(1) A vertical signal that is 20% higher (or more) than the balance point is a possible crack signal. A crack signal occurs during a short scan. Do more analysis of the possible crack signal as follows:

(a) A slow vertical signal can be caused by separation between layers. This signal will occur during a longer scan than a crack signal. Compare the signal you get during the inspection to the signal you got from the reference standard during calibration.

(b) Make sure the signal is not caused by the edge of subsurface structure. Do visual inspections on the inside edge of the door cutout, to identify the edges of such structure. Remove paint if the edges of the skin and substructure are not visible.

(c) Do an eddy current surface inspection along the inside edge of the bearstrap in the location of the possible crack signal. Use the instructions specified in Part 6, 51-00-00, Procedure 23. If no crack signal occurs, go to Paragraph 6.B.(1)(d).

(d) Remove the fastener(s) in the area of the signal and do an open hole inspection as specified in Part 6, 51-00-00, Procedure 16, to make sure of the results.

BOEING PROPRIETARY - Copyright © Unpublished Work - See title page for details

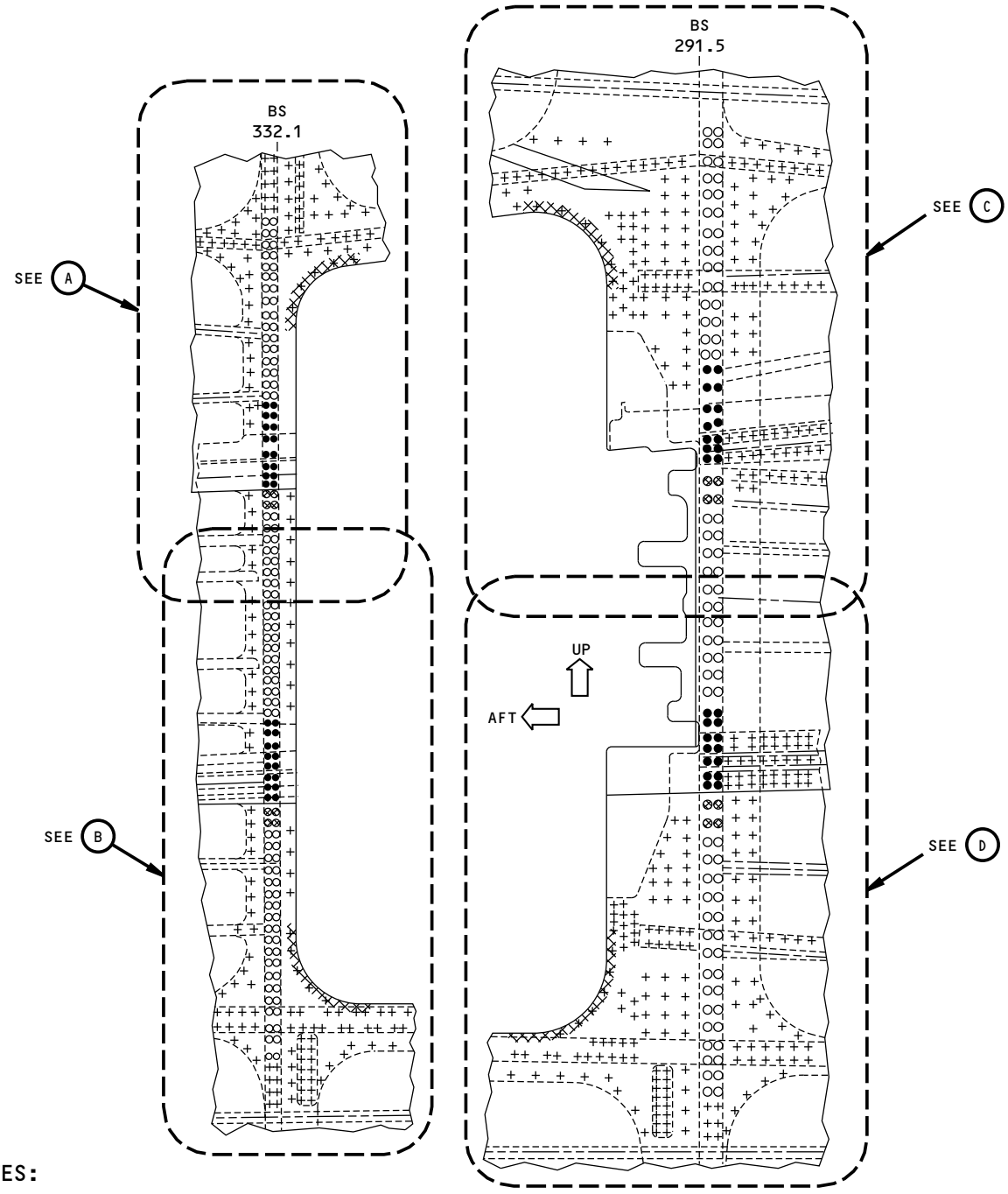

NOTES:

- THE FASTENER LOCATIONS TO BE EXAMINED FOR CRACKS IN THE OUTER CHORDS AND/OR BEARSTRAP ARE IDENTIFIED WITH A SYMBOL IN THE FIGURE 1 INSPECTION AREAS. THE FASTENER SYMBOLS IDENTIFIED IN THE INSPECTION AREAS EXAMINE THE STRUCTURE THAT FOLLOWS:
  - ● ⊗ OUTER CHORD AND BEARSTRAP
  - ○ BEARSTRAP
  - ▨ BEARSTRAP

2160152 S0000472305_V2

Forward Galley Door Cutout - BS 291.5 to BS 332.1
Figure 1 (Sheet 1 of 5)

BOEING PROPRIETARY - Copyright © Unpublished Work - See title page for details

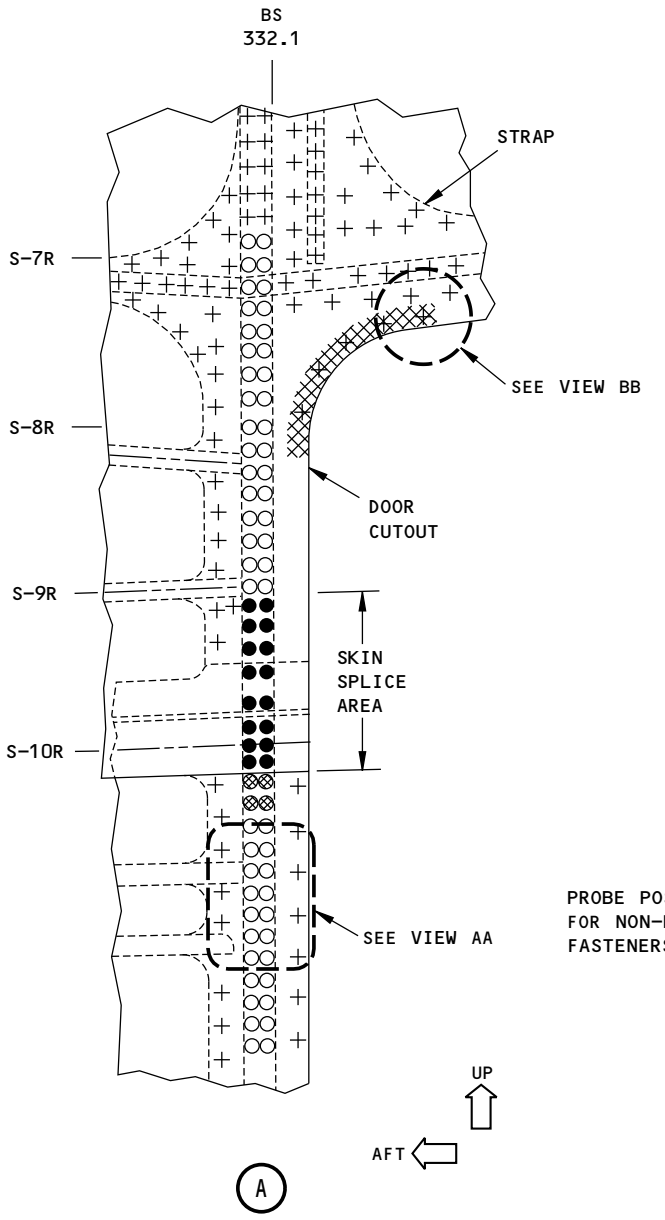

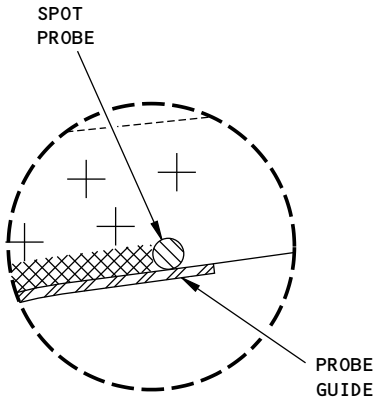

TYPICAL SPOT PROBE
POSITION AT THE EDGE OF
THE DOOR CUTOUT
VIEW BB

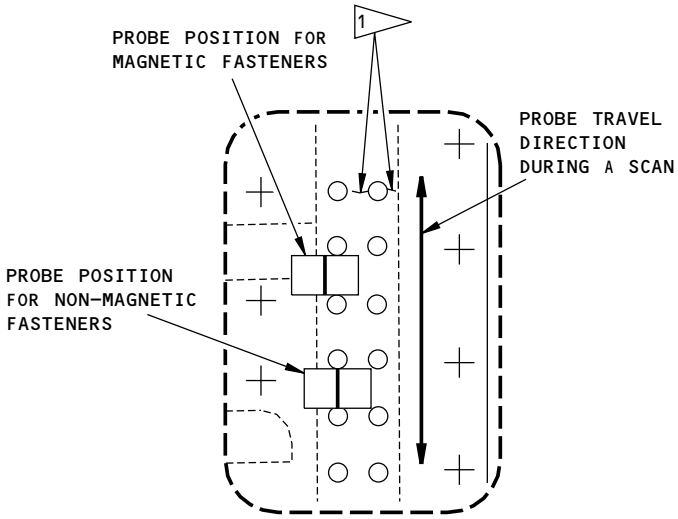

TYPICAL SLIDING PROBE
POSITION DURING A SCAN
VIEW AA

NOTES:

○●⊗ FASTENERS TO BE EXAMINED AS SPECIFIED IN PARAGRAPH 5.A. REFER TO THE CALIBRATION TABLE IN FIGURE 3, DETAIL II, FOR THE CALIBRATION DATA.

⊠ EXAMINE ALONG THE EDGE OF THE DOOR CUTOUT AS SPECIFIED IN PARAGRAPH 5.B.

1 TYPICAL CRACK DIRECTION IN THE BEARSTRAP AND/OR OUTER CHORD. THE CRACK CAN BE ON EACH SIDE OF THE FASTENER OR ONLY ON ONE SIDE.

2160153 S0000472307_V2

Forward Galley Door Cutout - BS 291.5 to BS 332.1
Figure 1 (Sheet 2 of 5)

BOEING PROPRIETARY - Copyright © Unpublished Work - See title page for details

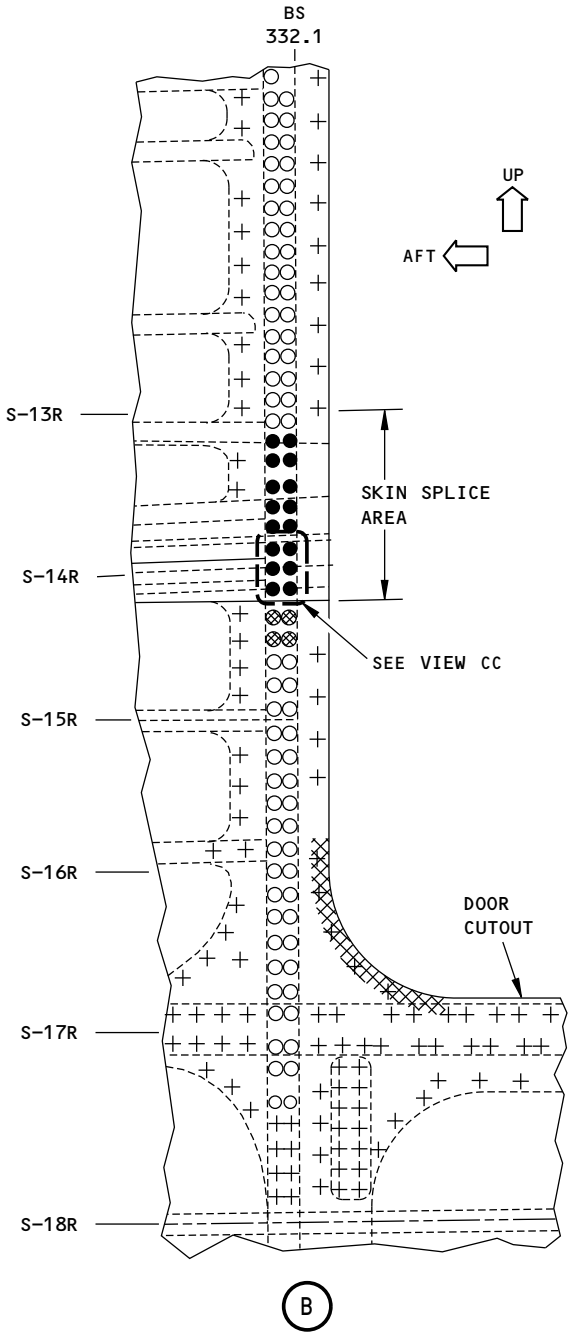

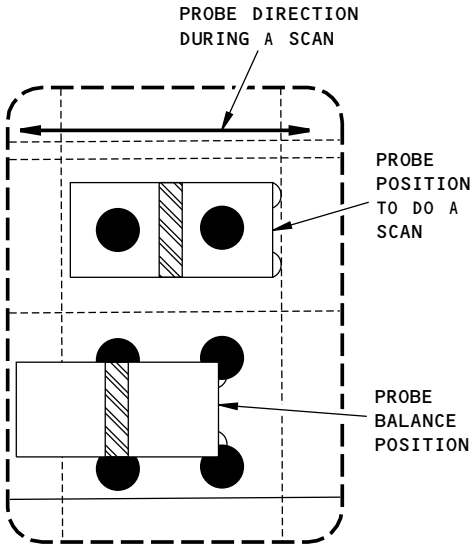

90 DEGREE SCAN
(TYPICAL FOR FASTENERS
NEAR SUBSURFACE EDGES AT
THE LAP SPLICES)

VIEW CC

NOTES:

○ ● ⊗ FASTENERS TO BE EXAMINED AS SPECIFIED IN PARAGRAPH 5.A. REFER TO THE CALIBRATION TABLE IN FIGURE 3, DETAIL II, FOR THE CALIBRATION DATA.

⊠ EXAMINE ALONG THE EDGE OF THE DOOR CUTOUT AS SPECIFIED IN PARAGRAPH 5.B.

2160154 S0000472308_V2

Forward Galley Door Cutout - BS 291.5 to BS 332.1
Figure 1 (Sheet 3 of 5)

BOEING PROPRIETARY - Copyright © Unpublished Work - See title page for details

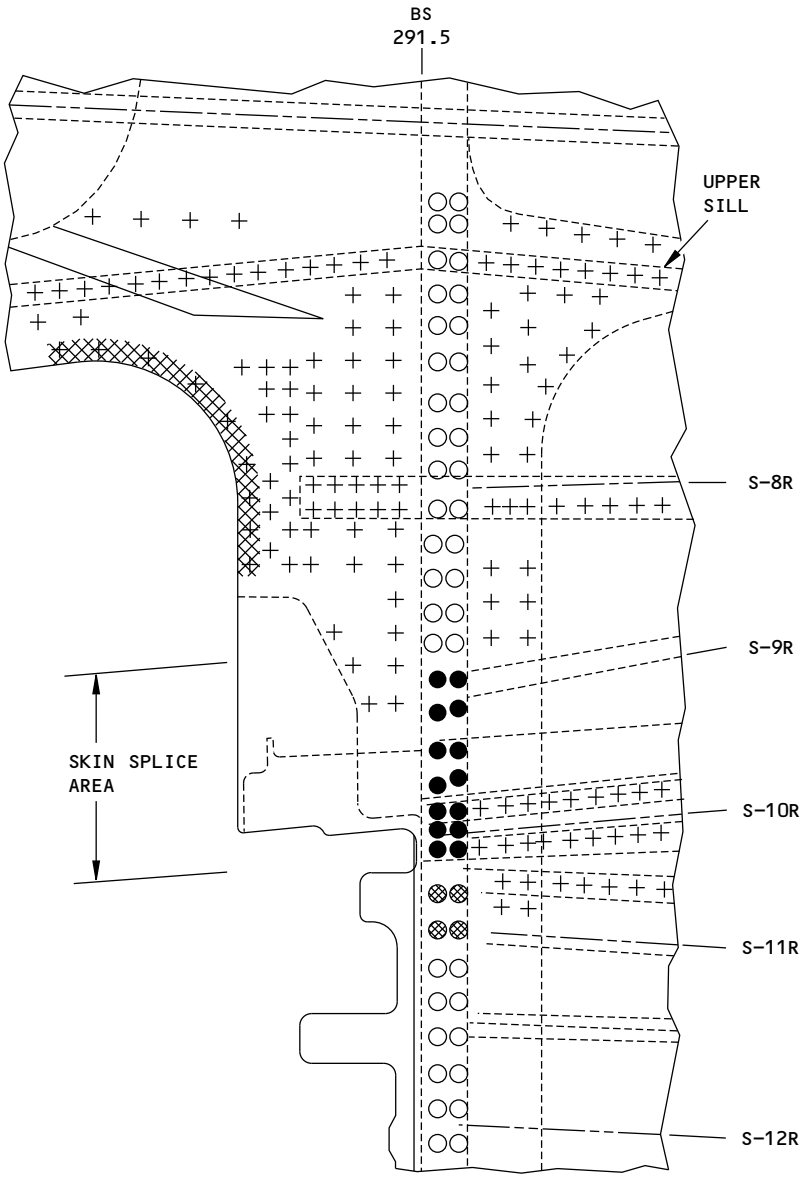

C

NOTES:

○●⊗ FASTENERS TO BE EXAMINED AS SPECIFIED IN PARAGRAPH 5.A. REFER TO THE CALIBRATION TABLE IN FIGURE 3, DETAIL II, FOR THE CALIBRATION DATA.

▨ EXAMINE ALONG THE EDGE OF THE DOOR CUTOUT AS SPECIFIED IN PARAGRAPH 5.B.

2160184 S0000472309_V2

Forward Galley Door Cutout - BS 291.5 to BS 332.1
Figure 1 (Sheet 4 of 5)

BOEING PROPRIETARY - Copyright © Unpublished Work - See title page for details

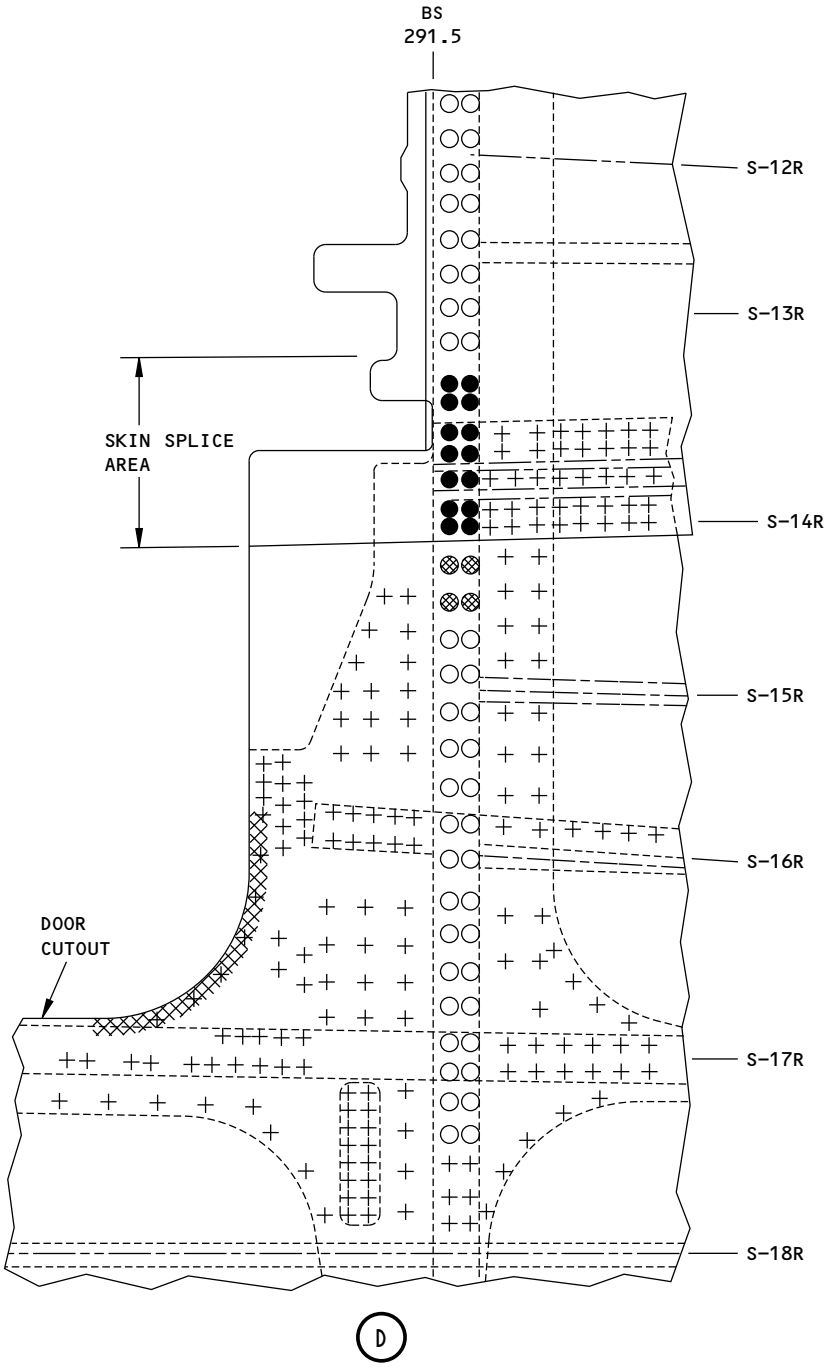

NOTES:

○ ● ⊗ FASTENERS TO BE EXAMINED AS SPECIFIED IN PARAGRAPH 5.A. REFER TO THE CALIBRATION TABLE IN FIGURE 3, DETAIL II, FOR THE CALIBRATION DATA.

⌧ EXAMINE ALONG THE EDGE OF THE DOOR CUTOUT AS SPECIFIED IN PARAGRAPH 5.B.

2160156 S0000472310_V2

Forward Galley Door Cutout - BS 291.5 to BS 332.1
Figure 1 (Sheet 5 of 5)

BOEING PROPRIETARY - Copyright © Unpublished Work - See title page for details

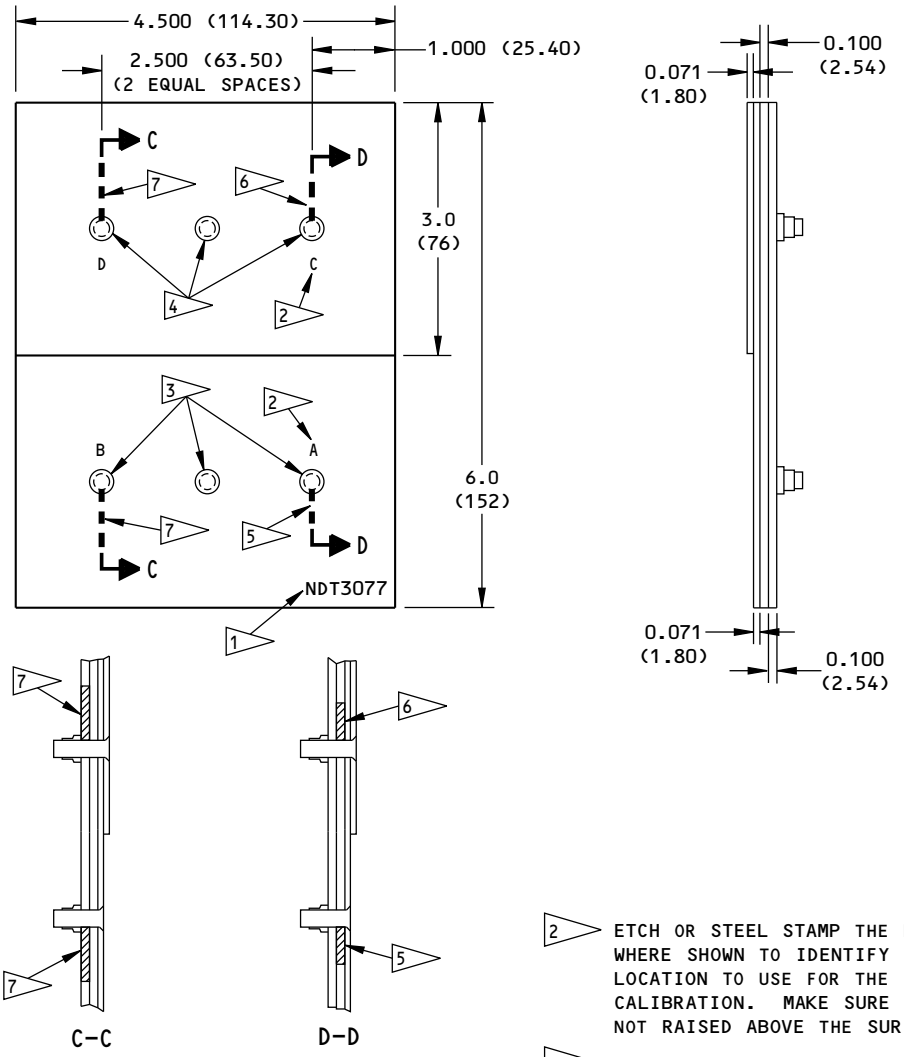

NOTES:

- ALL DIMENSIONS ARE IN INCHES (MILLIMETERS ARE IN PARENTHESES)
- TOLERANCES (UNLESS SPECIFIED DIFFERENTLY):

INCHES	MILLIMETERS
X.XXX = ±0.005	X.XX = ±0.1
X.XX = ±0.025	X.X = ±0.5
X.X = ±0.050	X = ±1

- NOTCH LOCATION TOLERANCE:

  THE NOTCH LOCATION MUST BE WITHIN ±0.005 (±0.10) OF THE CENTERLINE OF THE HOLE AS SHOWN.

- SURFACE ROUGHNESS: 63 Ra OR BETTER
- MATERIAL: 2024-T3 OR T4 ALUMINUM (CLAD)

1 ETCH OR STEEL STAMP THE REFERENCE STANDARD NUMBER NDT3077

2 ETCH OR STEEL STAMP THE LETTERS A THRU D WHERE SHOWN TO IDENTIFY THE FASTENER LOCATION TO USE FOR THE INSTRUMENT CALIBRATION. MAKE SURE THE LETTER IS NOT RAISED ABOVE THE SURFACE.

3 FASTENER: BACB30FN6A4
COLLAR: BACC30M6

4 FASTENER: BACB30FN6A5
COLLAR: BACC30M6

5 EDM NOTCH:
LENGTH: 0.350 (8.89) ±0.010 (0.25)
DEPTH: THROUGH THICKNESS
WIDTH: 0.007 (0.18) ±0.002 (0.05)

6 EDM NOTCH:
LENGTH: 0.450 (11.43) ±0.010 (0.25)
DEPTH: THROUGH THICKNESS
WIDTH: 0.007 (0.18) ±0.002 (0.05)

7 EDM NOTCH:
LENGTH: 0.650 (16.51) ±0.010 (0.25)
DEPTH: THROUGH THICKNESS
WIDTH: 0.007 (0.18) ±0.002 (0.05)

2160159 S0000472311_V1

Reference Standard NDT3077
Figure 2

BOEING PROPRIETARY - Copyright © Unpublished Work - See title page for details

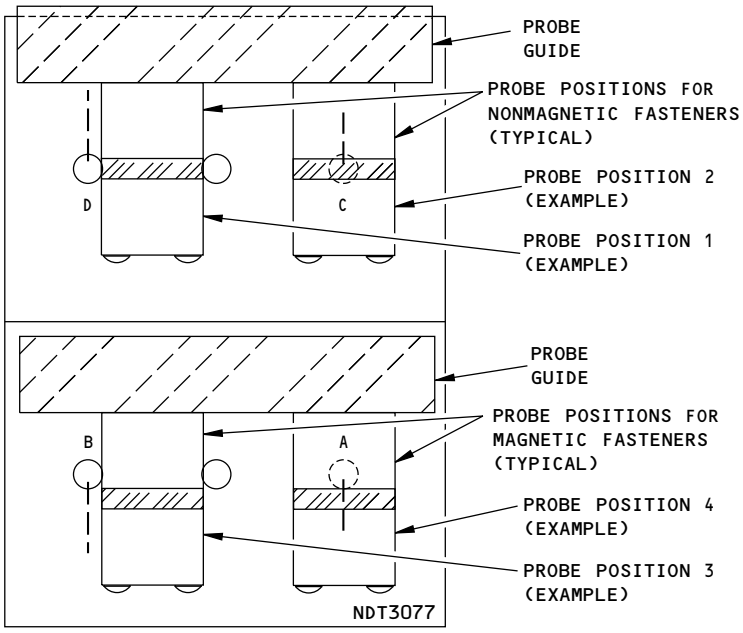

SLIDING PROBE POSITIONS FOR INSTRUMENT CALIBRATION
DETAIL I

FASTENER LOCATION TO EXAMINE (FASTENER CODE)	FASTENER LOCATION ON THE REFERENCE STANDARD	INSTRUMENT FREQUENCY (KHz)
○	A (#6 FASTENER)	3.0
●	D (#6 FASTENER)	0.5
⊗	B (#6 FASTENER)	0.8

CALIBRATION TABLE
DETAIL II

NOTES:

- TO EXAMINE NONMAGNETIC FASTENER LOCATIONS, THE PROBE SPACER MUST BE ALIGNED WITH THE CENTERLINE OF THE ROW OF FASTENERS AS SHOWN BY PROBE POSITIONS 1 AND 2. PROBE POSITION 1 IS THE BALANCE POINT LOCATION FOR THE "C" FASTENER LOCATION. PROBE POSITION 2 IS THE INSPECTION LOCATION FOR THE "C" FASTENER LOCATION.
- TO EXAMINE MAGNETIC FASTENER LOCATIONS, THE PROBE SPACER MUST BE AT THE EDGE OF THE FASTENER AS SHOWN BY PROBE POSITIONS 3 AND 4. PROBE POSITION 3 IS THE BALANCE POINT LOCATION FOR THE "A" FASTENER LOCATION. PROBE POSITION 4 IS THE INSPECTION LOCATION FOR THE "A" FASTENER LOCATION.
- REFER TO THE INSPECTION AREAS IN FIGURE 1 FOR THE FASTENER SYMBOLS TO EXAMINE. REFER TO THE CALIBRATION TABLE, DETAIL II, TO IDENTIFY WHICH FASTENER LOCATION ON THE REFERENCE STANDARD TO USE DURING CALIBRATION AND THE INSTRUMENT FREQUENCY TO USE.

2160161 S0000472312_V1

Instrument Calibration for the Chord and Bearstrap Fastener Locations with an Adjustable Sliding Probe
Figure 3 (Sheet 1 of 2)

BOEING PROPRIETARY - Copyright © Unpublished Work - See title page for details

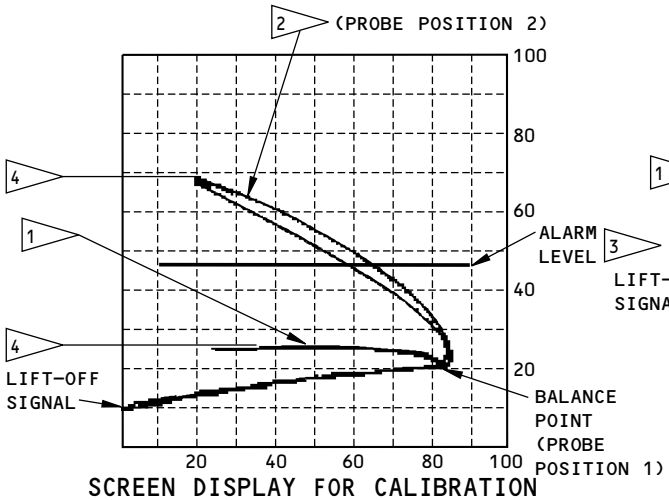

SCREEN DISPLAY FOR CALIBRATION
AT FASTENER LOCATION "A"
DETAIL III

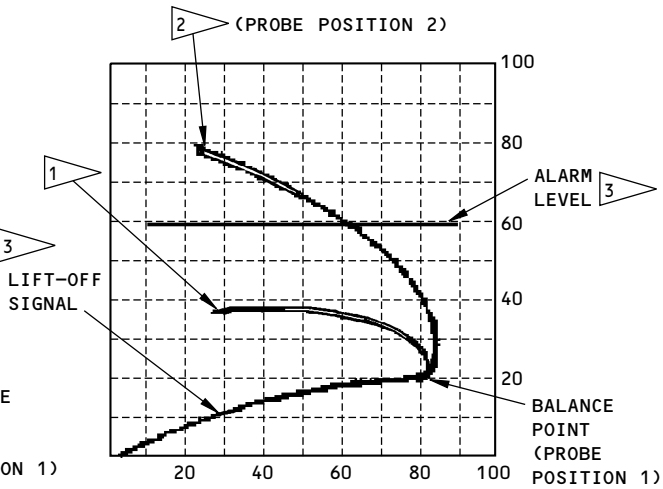

SCREEN DISPLAY FOR CALIBRATION
AT FASTENER LOCATION "D"
DETAIL IV

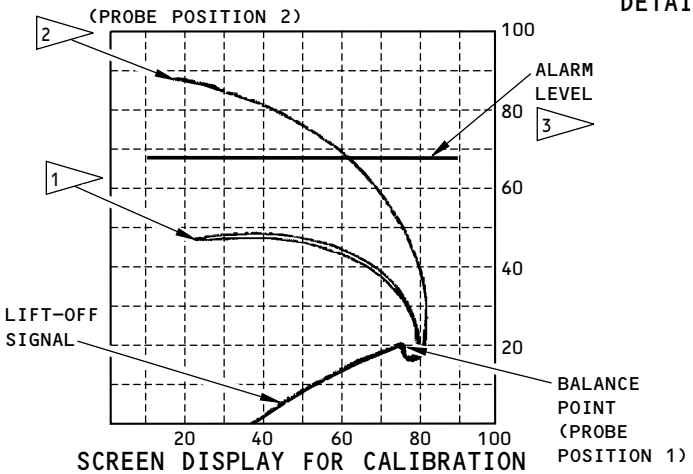

SCREEN DISPLAY FOR CALIBRATION
AT FASTENER LOCATION "B"
DETAIL V

NOTES:

- THE SCREEN DISPLAYS SHOWN IN DETAILS III THRU V ARE EXAMPLES WITH NONMAGNETIC FASTENERS IN THE REFERENCE STANDARD. DIFFERENT INSTRUMENTS AND PROBES CAN CAUSE THE SIGNALS TO LOOK DIFFERENT. MAGNETIC FASTENERS WILL CAUSE THE SIGNALS TO LOOK DIFFERENT THAN THOSE DISPLAYED IN DETAILS III THRU V.
- GET A MINIMUM SEPARATION OF 30% OF FSH BETWEEN THE SIGNAL FROM THE FASTENER LOCATION WITHOUT A NOTCH AND THE SIGNAL FROM THE FASTENER LOCATION WITH THE NOTCH.

1 SIGNAL OF THE FASTENER LOCATION WITHOUT THE NOTCH.

2 SIGNAL OF THE FASTENER LOCATION WITH THE NOTCH.

3 THE ALARM LEVEL IS SET AT 50% OF THE SEPARATION BETWEEN THE TOP OF THE SIGNAL FROM THE FASTENER LOCATION WITHOUT THE NOTCH AND THE TOP OF THE SIGNAL OF THE FASTENER LOCATION WITH THE NOTCH. SEE DETAIL III FOR AN EXAMPLE: MAXIMUM SIGNAL OF THE FASTENER LOCATION WITHOUT THE NOTCH = 27% OF FSH (FULL SCREEN HEIGHT), MAXIMUM FASTENER SIGNAL OF THE FASTENER HOLE LOCATION WITH THE NOTCH = 69% OF FSH. THE SEPARATION BETWEEN THE TWO SIGNALS = 42% OF FSH. SO, 50% OF THE SEPARATION IS 21% OF FSH. THE REJECT LEVEL IN THE DETAIL III SCREEN DISPLAY IS 48% OF FSH (27% OF FSH + 21% OF FSH).

4 MAXIMUM SIGNAL HEIGHT. THE MAXIMUM SIGNAL HEIGHT IS THE POINT AT WHICH THE SIGNAL IS THE HIGHEST ON THE SCREEN DISPLAY. (TYPICAL FOR ALL SCREEN DISPLAYS, DETAILS III THRU V).

2160166 S0000472313_V1

Instrument Calibration for the Chord and Bearstrap Fastener Locations with an Adjustable Sliding Probe
Figure 3 (Sheet 2 of 2)

BOEING PROPRIETARY - Copyright © Unpublished Work - See title page for details

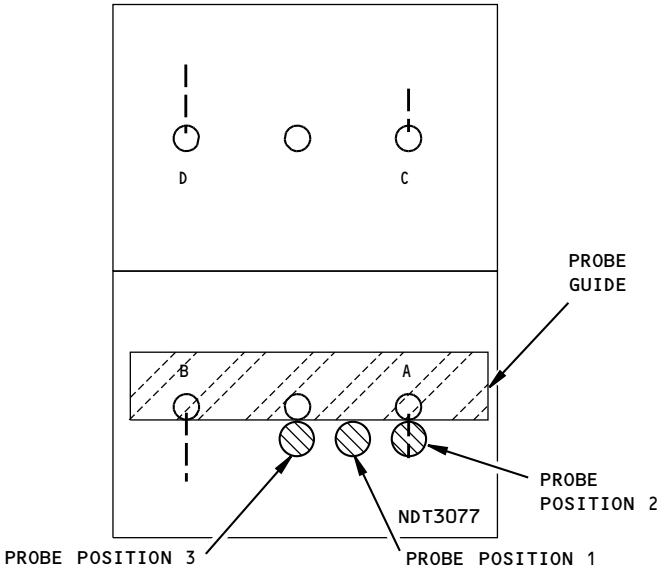

SPOT PROBE POSITIONS FOR INSTRUMENT CALIBRATION
DETAIL I

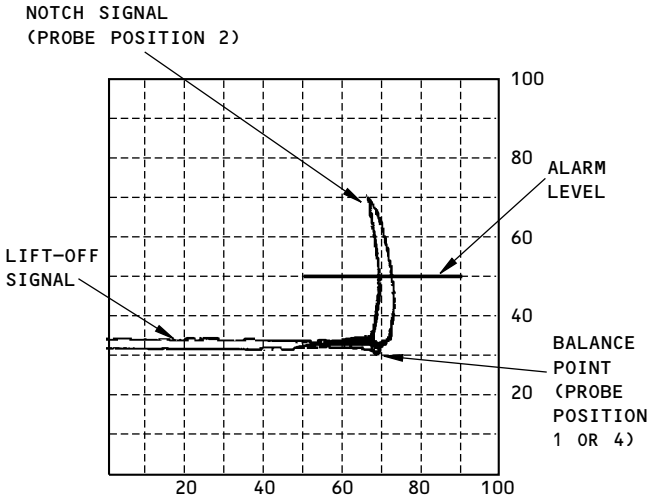

SCREEN DISPLAY FOR CALIBRATION
WITH SPOT PROBE
DETAIL II

NOTES:

- SPOT PROBE POSITIONS 1 THRU 3 ARE USED TO CALIBRATE THE INSTRUMENT TO EXAMINE THE AREAS THAT HAVE A SINGLE SKIN/STRAP THICKNESS. SEE THE AREAS IDENTIFIED AS ⧖ IN FIGURE 1.
- THE SCREEN DISPLAY SHOWN IN DETAIL II IS AN EXAMPLE. DIFFERENT INSTRUMENTS AND PROBES CAN CAUSE DIFFERENT DISPLAYS TO OCCUR.

2160167 S0000472314_V1

Instrument Calibration for the Edge of the Door Cutout
Figure 4

BOEING PROPRIETARY - Copyright © Unpublished Work - See title page for details

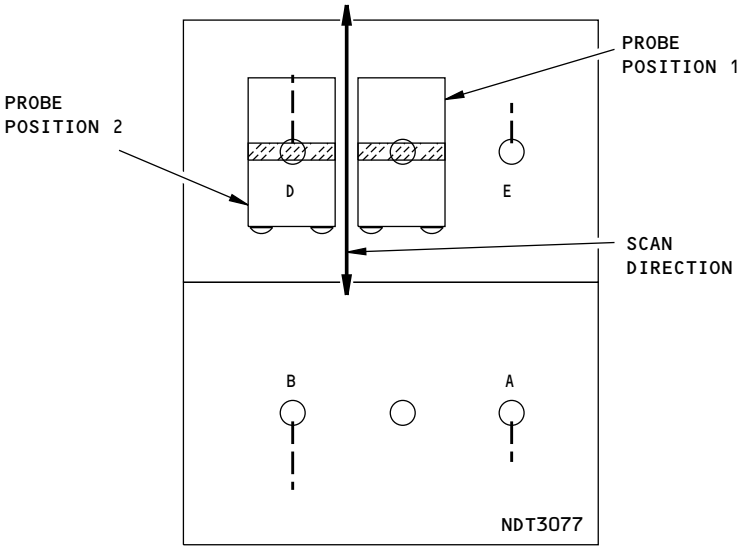

SLIDING PROBE POSITIONS TO DO A 90 DEGREE SCAN
DETAIL I

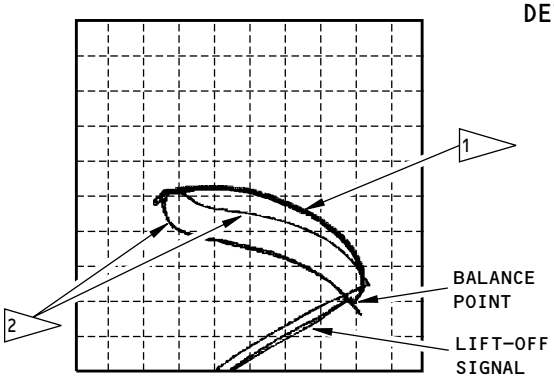

SCREEN DISPLAY OF THE FASTENER SIGNAL
WITHOUT THE NOTCH - PROBE POSITION 1
DETAIL II

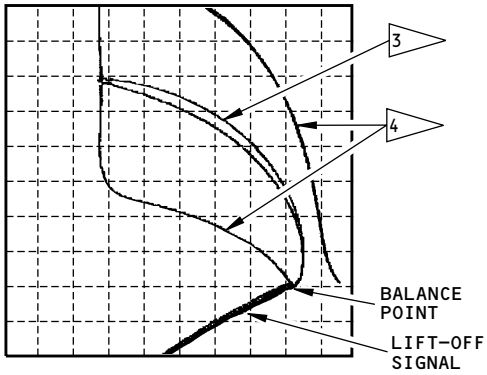

SCREEN DISPLAY OF THE FASTENER SIGNAL
WITH THE NOTCH - PROBE POSITION 2
DETAIL III

NOTES:

- THE SCREEN DISPLAYS SHOWN IN DETAILS II AND III ARE EXAMPLES ONLY TO SHOW THE DIFFERENCE OF SIGNALS WHEN THE PROBE IS SCANNED ABOVE THE FASTENER AS SPECIFIED IN FIGURE 3 OF THIS PROCEDURE AND AS SHOWN ABOVE IN DETAIL I. THE SIGNALS SHOWN IN DETAILS II AND III ARE FROM THE SAME FASTENER LOCATIONS AND WILL LOOK DIFFERENT AT OTHER FASTENER LOCATIONS. OTHER INSTRUMENTS AND PROBES CAN CAUSE THE SIGNALS TO LOOK DIFFERENT. MAGNETIC FASTENERS WILL CAUSE THE SIGNALS TO LOOK DIFFERENT THAN THOSE DISPLAYED IN DETAILS II AND III.

1 SIGNAL OF THE FASTENER LOCATION WITHOUT THE NOTCH, WITH THE PROBE SCANNED IN THE DIRECTION SHOWN IN FIGURE 3. THIS SIGNAL IS ADDED TO THE ABOVE SCREEN DISPLAY FOR VISUAL REFERENCE ONLY.

2 SIGNAL OF THE FASTENER LOCATION WITHOUT THE NOTCH, WITH THE PROBE SCANNED IN THE DIRECTION SHOWN ABOVE IN DETAIL I. THIS IS IDENTIFIED AS A 90 DEGREE SCAN.

3 SIGNAL OF THE FASTENER LOCATION WITH THE NOTCH, WITH THE PROBE SCANNED IN THE DIRECTION SHOWN IN FIGURE 3. THIS SIGNAL IS ADDED TO THE ABOVE SCREEN DISPLAY FOR VISUAL REFERENCE ONLY.

4 SIGNAL OF THE FASTENER LOCATION WITH THE NOTCH, WITH THE PROBE SCANNED IN THE DIRECTION SHOWN ABOVE IN DETAIL I. THIS IS IDENTIFIED AS A 90 DEGREE SCAN.

2160169 S0000472315_V1

Fastener Signals with the Sliding Probe Scanned in the 90 Degree Direction
Figure 5

BOEING PROPRIETARY - Copyright © Unpublished Work - See title page for details

PART 6 - EDDY CURRENT

BORE OF THE SIDE STRUT SUPPORT FITTING AT BS 685

1. **Purpose**

   A. Use this procedure to do an inspection for cracks in the bore of the side strut support fitting at BS 685. See Figure 1 for the inspection areas.

   B. This procedure uses a rotary scanner with an impedance plane display instrument.

   C. Service Bulletin Reference: 737-53-1246

2. **Equipment**

   NOTE: Refer to Part 1, 51-01-00, for data about the manufacturers of the equipment.

   A. All eddy current instruments with a rotary scanner can be used that can be calibrated as specified in this procedure.

      (1) Refer to Part 6, 51-00-00, Procedure 16, for data on the eddy current instruments and rotary scanner.

   B. Probes - There are 3 adjustable rotating probes identified below for this inspection procedure. These 3 probes have different adjustable diameters for the 3 possible hole diameters in the bore of the support fitting. If you know the diameter of the bores, then only one of these 3 probes is necessary for this inspection. Other adjustable rotating probes can be used for this inspection if they can be calibrated as specified in this procedure.

      (1) Refer to Part 6, 51-00-00, Procedure 16, paragraph 3 for the probe frequency, coil types and signal to noise ratio properties that the probes must have.

      (2) The adjustable probes that follow were used to help prepare this procedure.

         (a) NEC-3160-2.2/2.325-U; NDT Engineering Corp. This probe is for bore diameters that are approximately 2.21 inch (56.1 mm).

         (b) NEC-3160-2.31/2.435-U; NDT Engineering Corp. This probe is for bore diameters that are approximately 2.32 inch (59.0 mm).

         (c) NEC-3160-2.56/2.685-U; NDT Engineering Corp. This probe is for bore diameters that are approximately 2.57 inch (65.3 mm).

   C. Reference Standards

      (1) See Figure 2 for the reference standards. Use the reference standard with the hole diameter that is nearest to the diameter of the bore to be examined. The reference standards that follow were used to help prepare this procedure.

         (a) NDT3082A - This is for bore diameters that are approximately 2.21 inch (56.1 mm).

         (b) NDT3082B - This is for bore diameters that are approximately 2.32 inch (59.0 mm).

         (c) NDT3082C - This is for bore diameters that are approximately 2.57 inch (65.3 mm).

3. **Prepare for the Inspection**

   A. See Figure 1 for the inspection areas on the support fittings. Also, refer to Service Bulletin 737-53-1246 for data on the support fitting structure and components.

   B. Remove the uplock support shaft from the support fittings on the left and right sides of the airplane.

   C. Remove the bushings from the forward and aft sides of the support fittings.

BOEING PROPRIETARY - Copyright © Unpublished Work - See title page for details

D. Remove the sealant from the bores of the support fittings. It is important to completely remove the sealant from the bores so that the rotating probe can easily turn in the bore.

E. Clean the support fitting bores so they are smooth.

4. Instrument Calibration

A. Calibrate the equipment as specified in Part 6, 51-00-00, Procedure 16, paragraph 5. Use the reference standard specified in Paragraph 2.C. that is the nearest to the bore diameter to be examined.

(1) Set the rotary scanner speed at 600 RPM, not above 1000 RPM as is specified in Part 6, 51-00-00, Procedure 16, paragraph 5. For these large diameter bores, the notch signal will be better at 600 RPM. If your instrument cannot be set to 600 RPM, then the nearest higher speed is permitted.

(2) For this inspection, because of the large diameter bore, the notch signal will be better if the low pass filter is set higher than normal. Try a low pass filter setting of approximately 750 Hz and make adjustments of the low and high pass filters to get the best notch signal with the best signal to noise ratio.

NOTE: Some mini rotary scanners have low torque motors and the probes can slow down in the large diameter holes. It is permitted to apply a thin layer of lubricant in the bore of the reference standard to decrease friction. Do not use a silicone based lubricant.

5. Inspection Procedure

A. Calibrate the equipment as specified in Paragraph 4.

B. Do a probe fit check in the bore of the support fitting.

(1) If necessary, adjust the diameter of the probe so it is not too tight or too loose in the hole.

(a) If the probe is too tight, the probe will not turn in the hole.

(b) If the probe is too loose, it is possible that cracks will not be found.

(2) If necessary, apply a thin layer of lubricant to the support fitting bore.

(a) See the lubrication note in Paragraph 4.

C. Examine the bore of the support fitting for cracks as follows:

(1) Monitor the instrument screen display as you slowly push the rotating probe completely through the bore of the support fitting.

(2) Monitor the instrument screen display as you slowly pull the rotating probe completely through the bore of the support fitting.

(a) The probe scan must take from 10 to 15 seconds as the probe is moved from one edge of the hole to the other edge of the hole.

(b) Make sure the scan is done very carefully at the forward and aft edges of the bore.

D. Do Paragraph 5.A. thru Paragraph 5.C. on the support fitting on the other side of the airplane.

6. Inspection Results

A. See Part 6, 51-00-00, Procedure 16, for inspection result instructions.

B. Make sure the crack indication is not caused by the lubrication hole in the bore. See Figure 1 for the location of the lubrication hole.

C. If a crack is found, follow the instructions in Service Bulletin 737-53-1246.

BOEING PROPRIETARY - Copyright © Unpublished Work - See title page for details

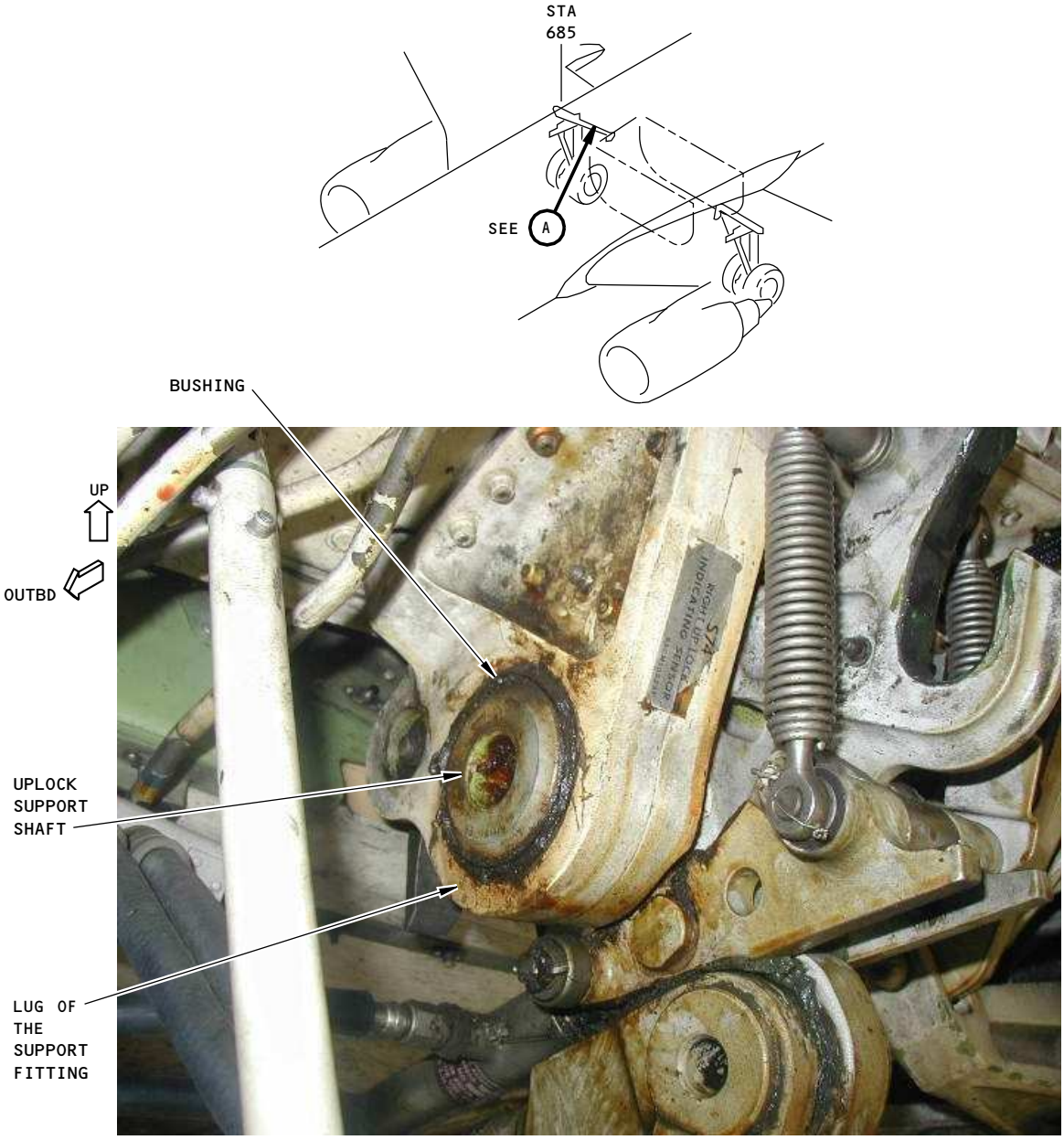

FORWARD VIEW OF THE RIGHT SUPPORT FITTING AT STATION 685 AS YOU LOOK AFT.
THE VIEW OF THE LEFT SIDE IS OPPOSITE

A

NOTES:

- REMOVE THE UPLOCK SUPPORT SHAFT FROM THE SUPPORT FITTING.
- REMOVE THE BUSHINGS FROM THE FORWARD AND AFT SIDES OF THE SUPPORT FITTING.

2160170 S0000472317_V1

Inspection Area
Figure 1 (Sheet 1 of 2)

BOEING PROPRIETARY - Copyright © Unpublished Work - See title page for details

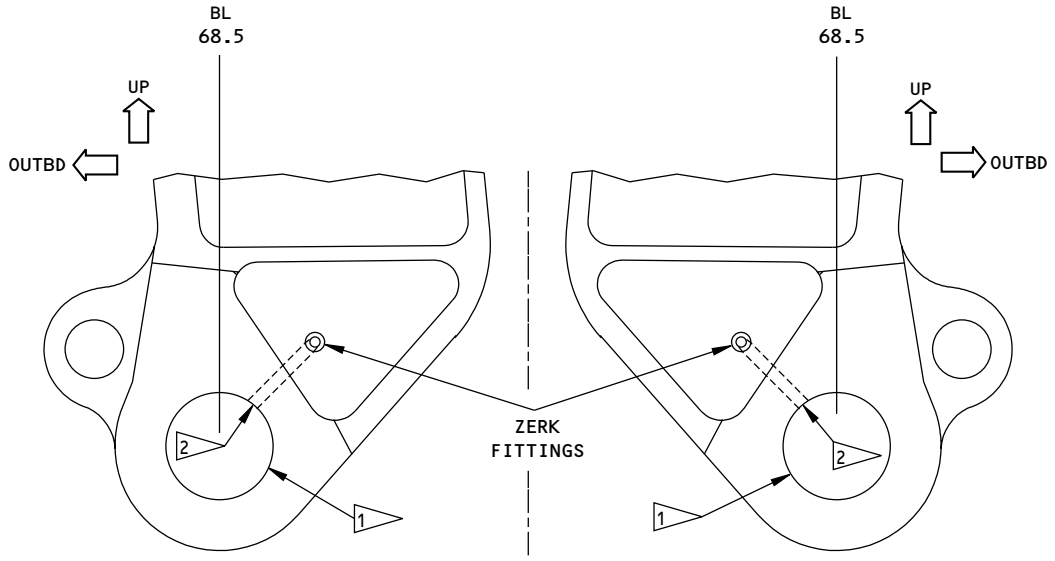

FORWARD SIDE OF THE SUPPORT FITTING
ON THE RIGHT SIDE OF THE AIRPLANE
AS YOU LOOK AFT

FORWARD SIDE OF THE SUPPORT FITTING
ON THE LEFT SIDE OF THE AIRPLANE
AS YOU LOOK AFT

1 INSPECTION AREAS. THESE BORES ARE SHOWN WITH THE UPLOCK SUPPORT SHAFT AND BUSHING REMOVED. REMOVE SEALANT FROM THE BORES AND MAKE SURE THEY ARE CLEAN BEFORE YOU DO THE INSPECTION.

2 SOME SUPPORT FITTINGS HAVE A LUBRICATION HOLE IN THE FORWARD HALF OF THE BORE AS SHOWN ABOVE. THIS LUBRICATION HOLE COULD CAUSE A CRACK-TYPE INDICATION. SEE IF A CRACK-TYPE INDICATION IS CAUSED BY THIS HOLE IN THE BORE AT THESE POSITIONS.

VIEW OF THE SUPPORT FITTING LUGS AT BS 685

2160172 S0000472318_V1

Inspection Area
Figure 1 (Sheet 2 of 2)

BOEING PROPRIETARY - Copyright © Unpublished Work - See title page for details

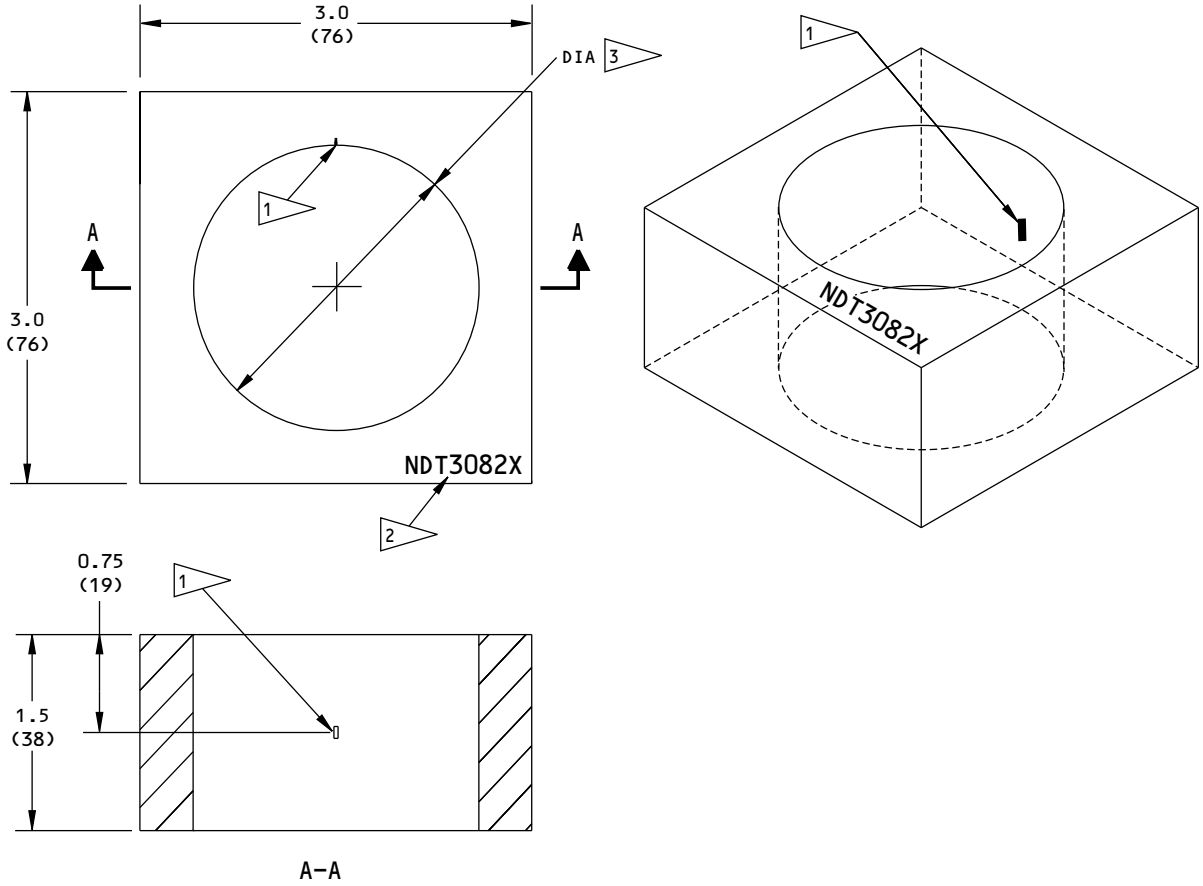

NOTES:

- ALL DIMENSIONS ARE IN INCHES (MILLIMETERS ARE IN PARENTHESES).
- TOLERANCE (UNLESS SPECIFIED DIFFERENTLY):

INCHES	MILLIMETERS
X.XXX = ±0.005	X.XX = ±0.1
X.XX = ±0.025	X.X = ±0.5
X.X = ±0.050	X = ±1

- MATERIAL: ALL ALUMINUM ALLOYS THAT HAVE A CONDUCTIVITY BETWEEN 28 AND 36% IACS (INTERNATIONAL ANNEALED COPPER STANDARD) SUCH AS 2024-T3 OR -T4, 7075-T6, 7079-T6
- FINISH REAM THE HOLE TO 63 RA.

1 ELECTRICAL DISCHARGE MACHINE (EDM) NOTCH. ONE NOTCH ON THE CENTER OF THE BORE SURFACE AS SHOWN. 0.060 (1.52) LONG X 0.030 (0.76) DEEP X 0.005 (0.13) MAXIMUM WIDTH.

2 ETCH OR STEEL STAMP THE REFERENCE STANDARD NUMBER NDT3082A, NDT3082B OR NDT3082C. FLAG NOTE 3 IDENTIFIES THE APPLICABLE REFERENCE STANDARD NUMBER FOR THE RELATED HOLE DIAMETER.

3 FOR NDT3082A, THE HOLE DIAMETER IS 2.210 +0.005, -0.0 (55.13 +0.13, -0.0)

FOR NDT3082B, THE HOLE DIAMETER IS 2.320 +0.005, -0.0 (58.13 +0.13, -0.0)

FOR NDT3082C, THE HOLE DIAMETER IS 2.570 +0.005, -0.0 (65.28 +0.13, -0.0)

2160173 S0000472319_V1

Reference Standard NDT3082X
Figure 2

BOEING PROPRIETARY - Copyright © Unpublished Work - See title page for details

INCONEL ANGLE OF THE B-D SILL IN THE CREW CABIN

1. Purpose

A. Use this procedure to examine the inconel angles of the B-D sills in the crew cabin. There are two inconel angles to examine; one inconel angle below each Point “D” splice fitting. See Figure 1 for the inspection locations.

B. There are seven inspection locations to examine on each of the inconel angles. The probe scans are done on the inconel angles around the fasteners and along the edge of the angles. See Figure 1.

C. Use an impedance plane display instrument and an angled pencil probe to do this procedure.

D. 737 Maintenance Planning Document (MPD) Damage Tolerance Record (DTR) Check Form Reference:

(1) Item: 53-10-04-6

E. 737 Maintenance Planning Document (D6-26A001) Reference:

(1) Item: 53-10-04-6

2. Equipment

A. General

(1) Refer to Part 1, 51-01-00, for data about the equipment manufacturers.

B. Instruments

(1) Refer to Part 6, 51-00-00, Procedure 14, for instrument data and instruments that were used to help prepare this procedure.

C. Probes

(1) Refer to Part 6, 51-00-00, Procedure 14, for probe data.

(2) Use an angled pencil probe that:

(a) Can be calibrated as specified in Paragraph 4.

(b) Can operate between 990 kHz and 2 MHz.

(c) Has a maximum diameter of 0.130 inch (3.30 mm) at the probe coil.

(d) Is shielded.

(3) The probes that follow were used to help prepare this procedure.

(a) TPEN930-6/2MB; Techna NDT

(b) MTF903-50B/2M; NDT Engineering Corp. (Olympus NDT)

D. Reference Standard

(1) Refer to Part 6, 51-00-00, Procedure 14, for data about reference standard 1004.

3. Prepare for the Inspection

A. Refer to Service Bulletin 737-53A1222 for instructions to remove panels and other equipment to get access to the inconel angles.

BOEING PROPRIETARY - Copyright © Unpublished Work - See title page for details

B. Remove loose paint, dirt or sealant from the scan areas on the inconel angles. See Figure 1 for the scan areas where the probe will touch. The inconel angles are immediately below the Point “D” splice fittings (on the left and right sides of the airplane).

4. Instrument Calibration

A. Refer to Part 6, 51-00-00, Procedure 14, for the calibration instructions.

(1) Use reference standard 1004 for the calibration.

5. Inspection Procedure

A. Refer to Part 6, 51-00-00, Procedure 14, paragraph 6, for general data on surface eddy current inspection procedures.

B. Do a probe scan around the fasteners on the inconel angle that is below the Point “D” splice fitting. See Figure 1 for these fastener locations.

C. Do a probe scan along the edge of the inconel angle where a probe scan cannot be done around a fastener in the inspection area. A probe scan cannot be done around a fastener where a clip or a radius filler is installed. See Figure 1.

D. Do Paragraph 5.B. and Paragraph 5.C. on the other side of the airplane.

6. Inspection Results

A. Refer to Part 6, 51-00-00, Procedure 14, paragraph 7, for instructions to help make an analysis of possible crack indications.

BOEING PROPRIETARY - Copyright © Unpublished Work - See title page for details

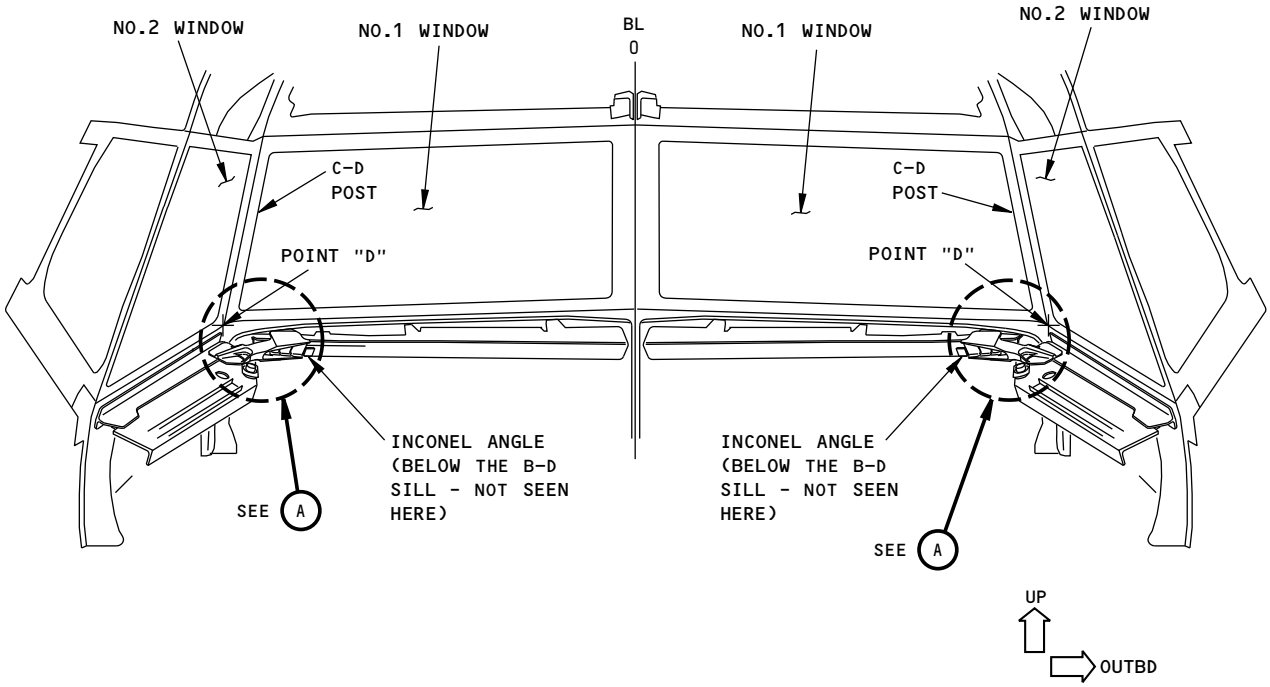

WINDOW FRAMES OF THE CREW CAB
(VIEW AS YOU LOOK FORWARD)

2160188 S0000472322_V1

Inspection Areas
Figure 1 (Sheet 1 of 2)

BOEING PROPRIETARY - Copyright © Unpublished Work - See title page for details

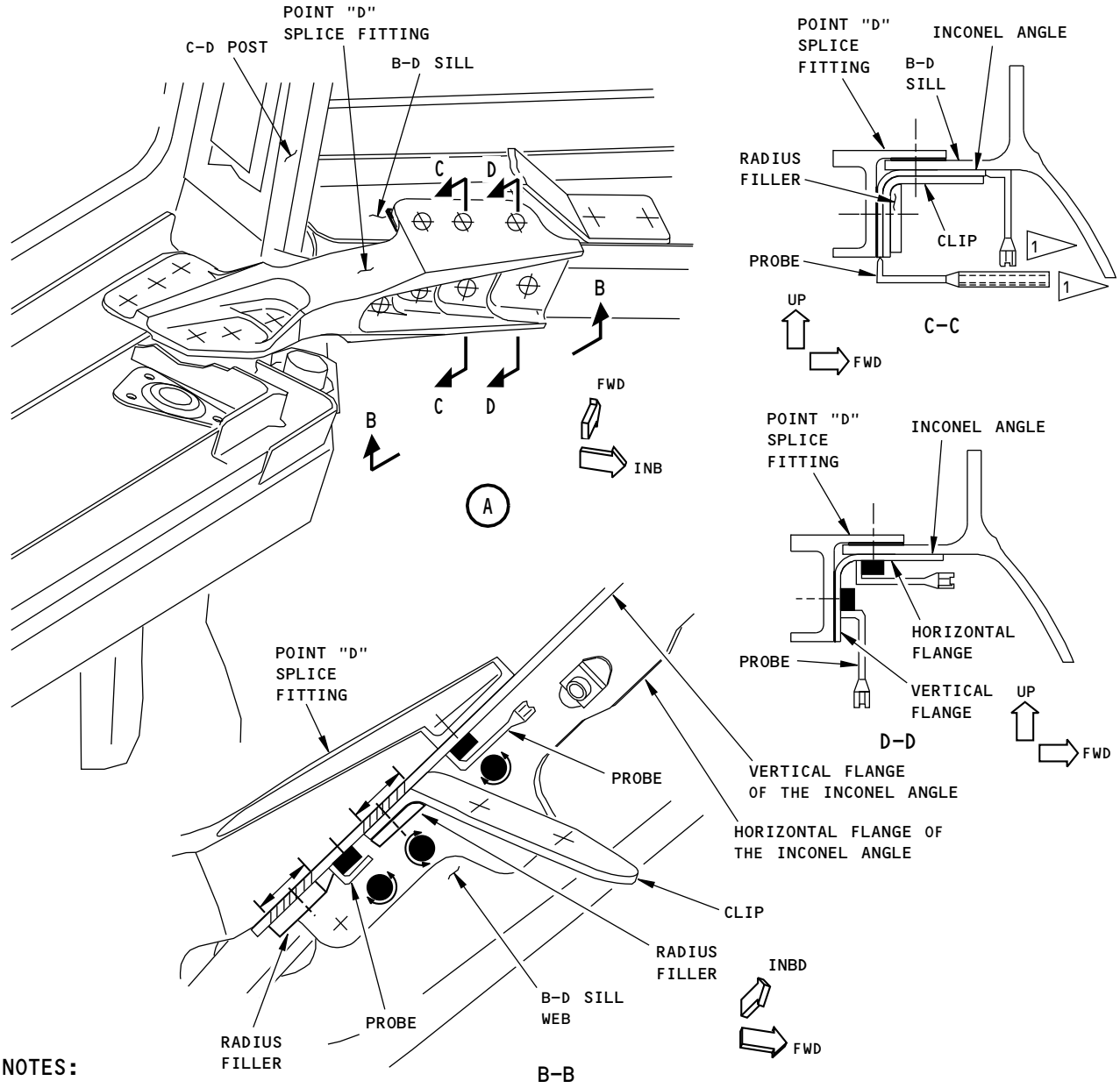

NOTES:

▨ = SCAN AREAS ON THE EDGES OF THE INCONEL ANGLES

- THE INSPECTION AREAS ARE ON THE INCONEL ANGLE BELOW THE POINT "D" SPLICE FITTING IN THE AREAS THAT ARE OPPOSITE THE SEVEN FASTENERS IDENTIFIED BY ⊕ IN VIEW (A). THE INCONEL ANGLE CAN NOT BE SEEN IN VIEW (A).
- THE LEFT SIDE IS SHOWN; THE RIGHT SIDE IS OPPOSITE

● = FRONT VIEW OF FASTENERS. EXAMINE THESE WITH A CIRCULAR SCAN.

▬ = SIDE VIEW OF FASTENERS. EXAMINE THESE WITH A CIRCULAR SCAN.

1 DO A SCAN ON THE EDGES OF THE INCONEL ANGLE WHERE A RADIUS FILLER AND CLIP ARE INSTALLED.

2160189 S0000472323_V1

Inspection Areas
Figure 1 (Sheet 2 of 2)

BOEING PROPRIETARY - Copyright © Unpublished Work - See title page for details

PART 6 - EDDY CURRENT

POINT 'D' SPLICE FITTING AT THE CREW CABIN C-D POST

1. Purpose

A. Use this procedure to examine the Point “D” splice fitting for cracks at the C-D window post in the crew cab. The splice fitting is 15-5PH magnetic steel. See Figure 1 for the inspection locations.

B. There are four probe scan areas on each of the Point “D” splice fittings. These scan areas are near the aft edges of the splice fittings. See Figure 1.

C. Use an impedance plane display instrument and an angled pencil probe to do this procedure.

D. 737 Maintenance Planning Document (MPD) Damage Tolerance Record (DTR) Check Form Reference:

(1) Item: 53-10-04-5

E. 737 Maintenance Planning Document (D6-26A001) Reference:

(1) Item: 53-10-04-5

2. Equipment

A. General

(1) Refer to Part 1, 51-01-00, for data about the equipment manufacturers.

B. Instruments

(1) Refer to Part 6, 51-00-00, Procedure 24, for instrument data and instruments that were used to help prepare this procedure.

C. Probes

(1) Refer to Part 6, 51-00-00, Procedure 24, for probe data.

(2) Use an angled pencil probe that:

(a) Can be calibrated as specified in Paragraph 4.

(b) Has a maximum diameter of 0.130 inch (3.30 mm) at the probe coil.

(c) Is shielded.

(3) The probes that follow were used to help prepare this procedure.

(a) TPEN930-5B; Techna NDT LLC

(b) MTF903-50B; Olympus NDT Engineering Corp.

D. Reference Standard

(1) Refer to Part 6, 51-00-00, Procedure 24, for data about reference standard 185.

3. Prepare for the Inspection

A. Refer to Service Bulletin 737-53A1222 for instructions to remove panels and other equipment to get access to the Point “D” splice fittings. Do not remove the Point “D” splice fittings. This inspection is done with the splice fittings installed.

B. Remove loose paint, dirt or sealant from the four scan areas on the Point “D” splice fittings. See Figure 1 for the scan areas where the probe will touch.

BOEING PROPRIETARY - Copyright © Unpublished Work - See title page for details

4. **Instrument Calibration**

   A. Calibrate the instrument as specified in Part 6, 51-00-00, Procedure 24.

      (1) Use reference standard 185 (high permeability steel) for the calibration.

5. **Inspection Procedure**

   A. Refer to Part 6, 51-00-00, Procedure 24, paragraph 6, for general data on surface eddy current inspection procedures.

   B. Put a nonconductive straightedge along one of the edges of the Point “D” splice fitting as shown in Figure 1.

   C. Put the probe on one of the inspection areas along the edge of the Point “D” splice fitting. Make sure the probe is against the straightedge as shown in Figure 1.

   D. Balance the instrument.

   E. Do a probe scan in one of the inspection areas shown in Figure 1.

   F. Do Paragraph 5.B. thru Paragraph 5.E. on all four of the Point “D” splice fitting inspection areas that are shown in Figure 1.

   G. Do Paragraph 5.B. thru Paragraph 5.F. for the Point “D” splice fitting on the other side of the airplane.

6. **Inspection Results**

   A. Refer to Part 6, 51-00-00, Procedure 24, paragraph 7, for instructions to help make an analysis of possible crack indications.

BOEING PROPRIETARY - Copyright © Unpublished Work - See title page for details

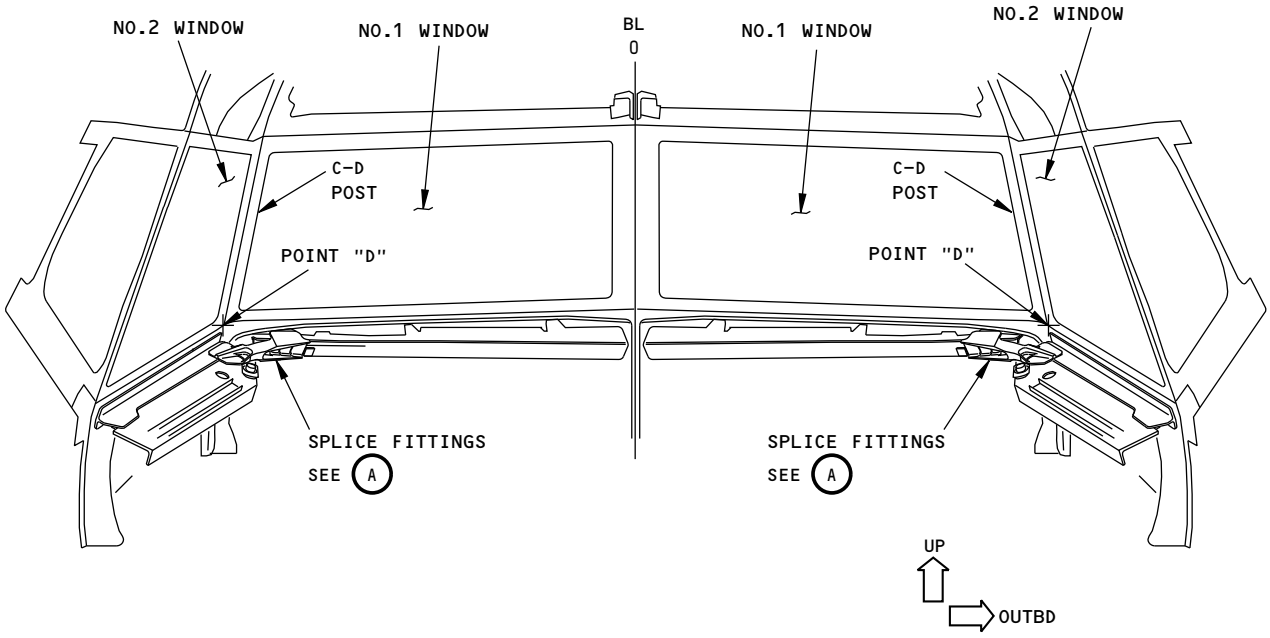

WINDOW FRAMES OF THE CREW CAB
(VIEW AS YOU LOOK FORWARD)

2160190 S0000472329_V1

Inspection Areas
Figure 1 (Sheet 1 of 2)

BOEING PROPRIETARY - Copyright © Unpublished Work - See title page for details

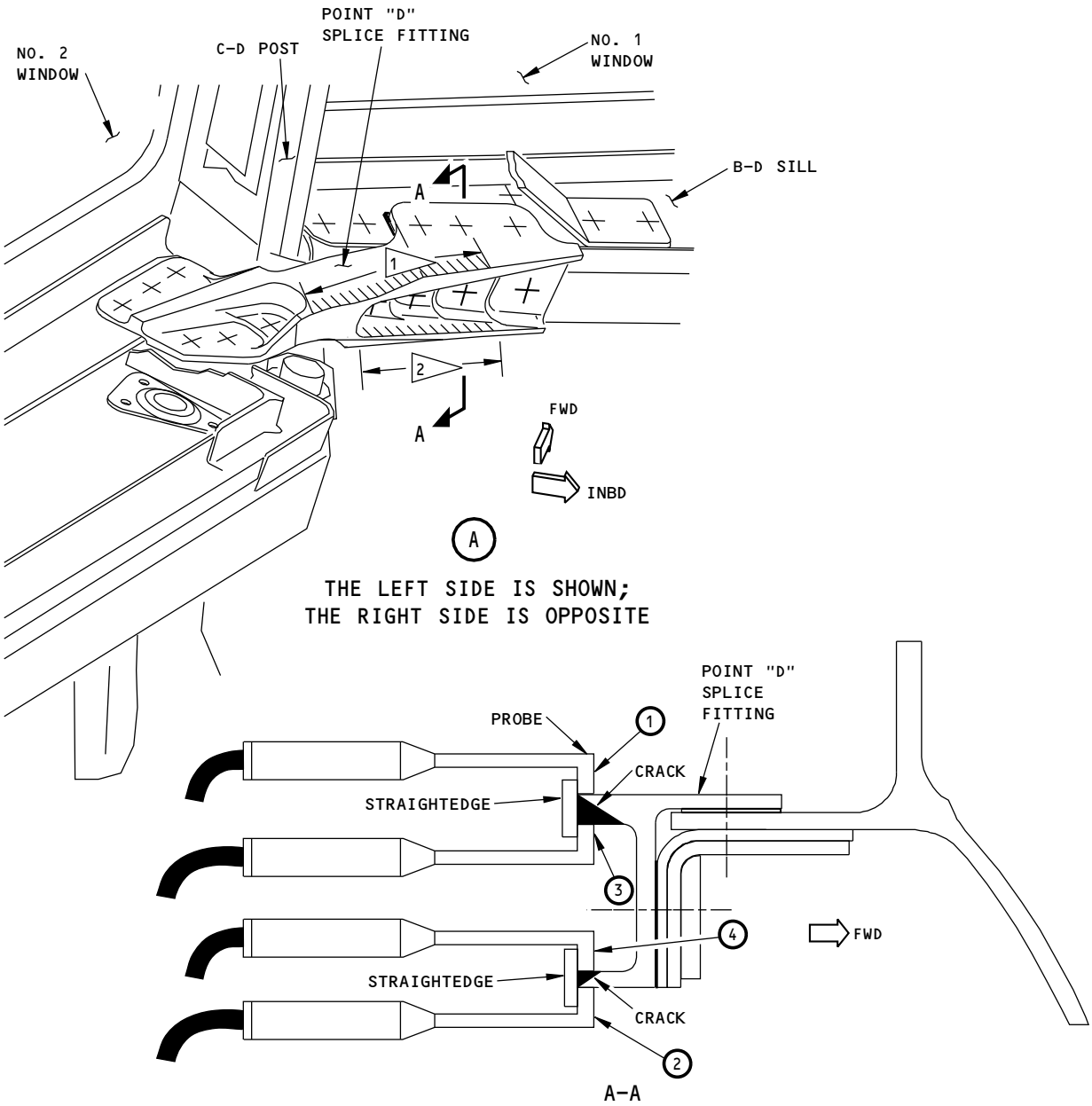

NOTES:

\\\\\ INSPECTION AREA

- DO THE PROBE SCANS ON THE FOUR SURFACES OF THE POINT "D" SPLICE FITTING AS SHOWN. THE LEFT FITTING IS SHOWN; THE RIGHT FITTING IS OPPOSITE.

1 THE SCAN DISTANCE AT PROBE POSITIONS 1 AND 2 ARE EQUIVALENT.

2 THE SCAN DISTANCE AT PROBE POSITIONS 3 AND 4 ARE EQUIVALENT.

2160191 S0000472330_V1

Inspection Areas
Figure 1 (Sheet 2 of 2)

BOEING PROPRIETARY - Copyright © Unpublished Work - See title page for details

SURFACE INSPECTION OF THE B-D SILLS IN THE CREW CABIN - LBL 8.0 TO LBL 26.5 AND RBL 8.0 TO RBL 26.5

1. Purpose

A. Use this procedure to examine the aluminum B-D sills in the crew cabin. See Figure 1 for the inspection locations on the lower surface of the B-D sills.

B. The probe scans are done on the lower surface of the B-D sills around the ends of the rivets (and/or collars, if applicable). The inspection areas are from LBL 8 to LBL 26.5 and from RBL 8 to RBL 26.5. See Figure 1.

C. Use an impedance plane display instrument and an angled pencil probe to do this procedure.

D. 737 Maintenance Planning Document (MPD) Damage Tolerance Record (DTR) Check Form Reference:

(1) Item: 53-10-04-4

(2) Item: 53-10-04-4a

E. 737 Maintenance Planning Document (D6-26A001) Reference:

(1) Item: 53-10-04-4

(2) Item: 53-10-04-4a

2. Equipment

A. General

(1) Refer to Part 1, 51-01-00, for data about the equipment manufacturers.

B. Instruments

(1) Refer to Part 6, 51-00-00, Procedure 23, for instrument data and instruments that were used to help prepare this procedure.

C. Probes

(1) Refer to Part 6, 51-00-00, Procedure 23, for probe data.

(2) Use an angled pencil probe that:

(a) Can be calibrated as specified in Paragraph 4.

(b) Can operate between 200 and 300 kHz.

(c) Has a maximum diameter of 0.130 inch (3.30 mm) at the probe coil.

(d) Is shielded.

(3) The probes that follow were used to help prepare this procedure.

(a) TPEN915-5B; Techna NDT

(b) MTF902-50B; Olympus NDT

D. Reference Standard

(1) Refer to Part 6, 51-00-00, Procedure 23, for data about reference standard 188A.

E. Special Tools: A mirror will help you see the inspection area.

BOEING PROPRIETARY - Copyright © Unpublished Work - See title page for details

3. **Prepare for the Inspection**

NOTE: If you make a decision not to remove the windshield wiper motor and ducts for this inspection, you can do a subsurface eddy current (LFEC) inspection on the outer skin of the airplane. The external LFEC inspection procedure for the B-D sill from BL 26.5 to 8.0 is Part 6, 53-10-76.

A. Refer to Service Bulletin 737-53A1222 for instructions to remove panels and other equipment to get access to the B-D sills (left and right sides) in the crew cabin.

B. Remove the windshield wiper motors that are installed below the B-D sills at LBL 12.0 and RBL 12.0.

C. Loosen the de-fog duct to get access to the lower surface of the B-D sill.

D. Remove loose paint, dirt or sealant from the scan areas on the lower surface of the B-D sills. The scan areas are on the lower surface of the B-D sills from LBL 8 to LBL 26.5 and from RBL 8 to RBL 26.5. See Figure 1 for the scan areas on the B-D sills around the rivet ends.

4. **Instrument Calibration**

A. Refer to Part 6, 51-00-00, Procedure 23, for the calibration instructions.

(1) Use reference standard 188A for the calibration. Do the probe scan around the rivet head on reference standard 188A for the calibration.

5. **Inspection Procedure**

A. Refer to Part 6, 51-00-00, Procedure 23, paragraph 6, for general data on surface eddy current inspection procedures.

B. Do circular probe scans around the rivet ends on the lower surface of the B-D sills from LBL 8 to LBL 26.5 and from RBL 8 to RBL 26.5. See Figure 1 for these inspection areas.

NOTE: There can possibly be some collars in the inspection area near BL 8.0. If so, do the circular probe scans around the collars.

6. **Inspection Results**

A. Refer to Part 6, 51-00-00, Procedure 23, paragraph 7, for instructions to help make an analysis of possible crack indications.

BOEING PROPRIETARY - Copyright © Unpublished Work - See title page for details

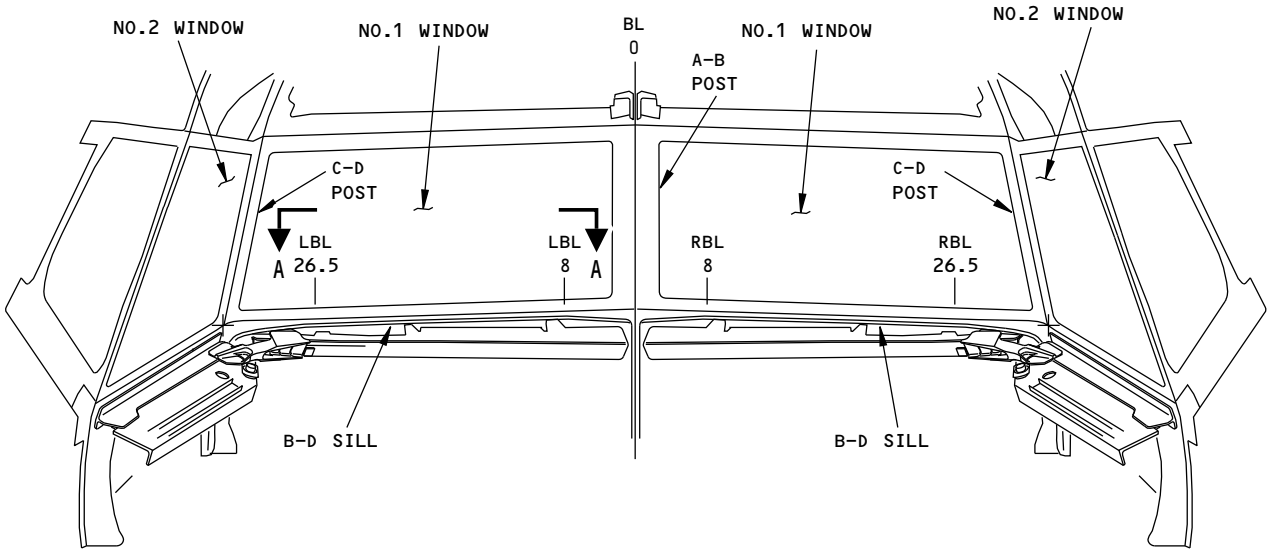

WINDOW FRAMES OF THE CREW CAB
(VIEW AS YOU LOOK FORWARD)

2160192 S0000472332_V1

Inspection Areas
Figure 1 (Sheet 1 of 2)

BOEING PROPRIETARY - Copyright © Unpublished Work - See title page for details

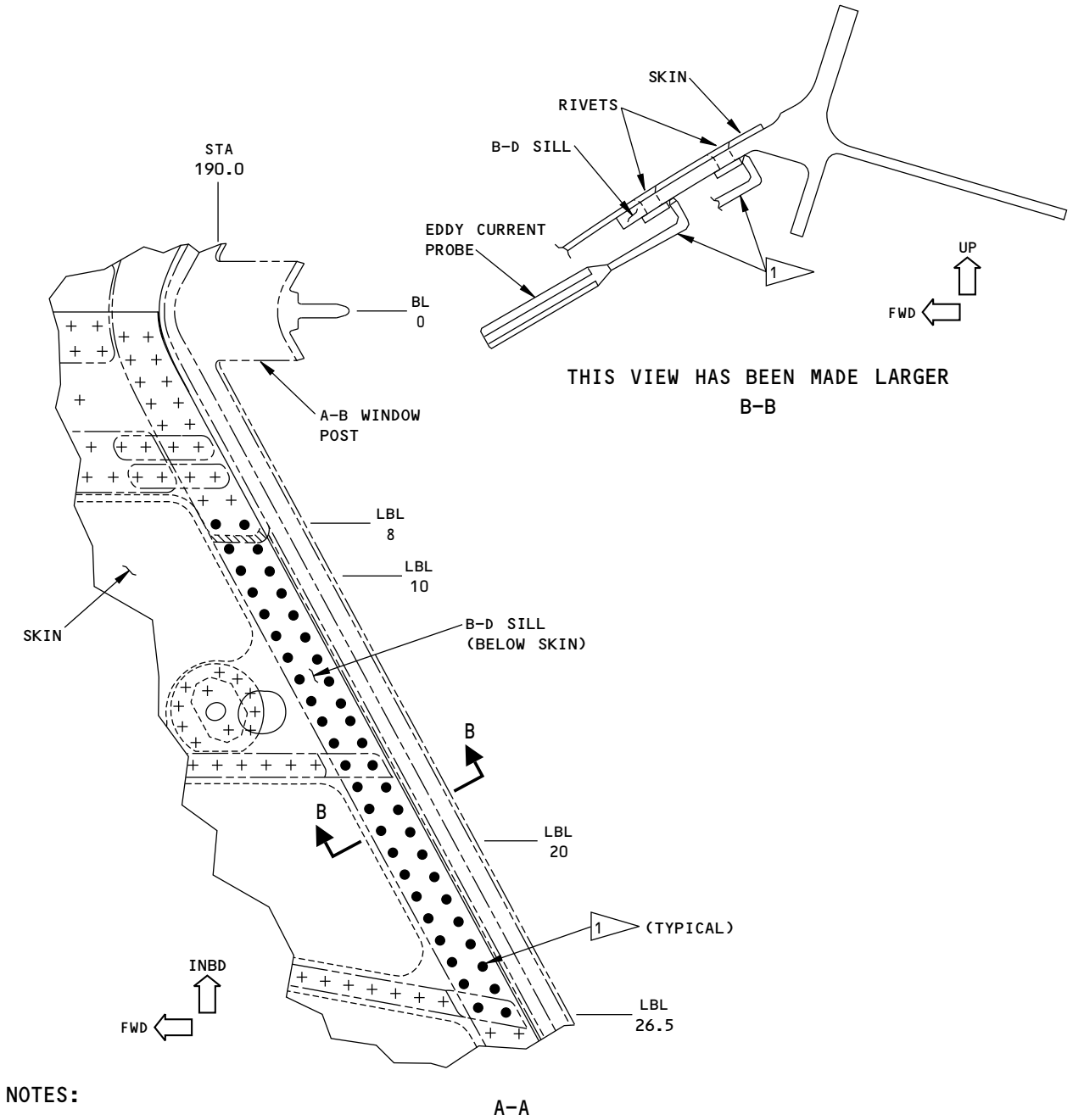

NOTES:

- INSPECTION LOCATIONS
- SECTION A-A SHOWS THE B-D SILL ON THE LEFT SIDE OF THE AIRPLANE. THE B-D SILL ON THE RIGHT SIDE OF THE AIRPLANE IS OPPOSITE.

1 DO A CIRCULAR PROBE SCAN AROUND ALL THE INSPECTION LOCATIONS ON THE LOWER SURFACE OF THE B-D SILL. THE INSPECTION AREAS ON THE B-D SILLS ARE FROM LBL 8 TO LBL 26.5 AND FROM RBL 8 TO RBL 26.5

2160193 S0000472333_V1

Inspection Areas
Figure 1 (Sheet 2 of 2)

BOEING PROPRIETARY - Copyright © Unpublished Work - See title page for details

PART 6 - EDDY CURRENT

E-F POST IN THE CREW CABIN

1. **Purpose**
   - A. Use this procedure to examine the forward side of the titanium E-F post in the crew cabin. See Figure 1 for the inspection area on the E-F post.
   - B. Make circular probe scans around the fasteners in the inspection area. See Figure 1 for the inspection area.
   - C. An impedance plane display instrument and a pencil probe are used to do this inspection.
   - D. 737 Damage Tolerance Rating (D626A001-DTR):
     - (1) Item: 53-10-04-3
2. **Equipment**
   - A. General
     - (1) Refer to Part 1, 51-01-00, for data about the equipment manufacturers.
   - B. Instruments
     - (1) Refer to Part 6, 51-00-00, Procedure 14, for instrument data and instruments that were used to help prepare this procedure.
   - C. Probes
     - (1) Refer to Part 6, 51-00-00, Procedure 14, for probe data.
     - (2) Use a straight or 90 degree probe that:
       - (a) Can operate between 1 and 3 MHz.
       - (b) Has a maximum probe diameter at the coil of 0.130 inch (3.3 mm).
       - (c) If a 90 degree probe is used, it must have a minimum probe drop of 0.40 inches (10.1 mm).
       - (d) Is shielded.
     - (3) The probes that follow were used to help prepare this procedure.
       - (a) TPEN940-6/2MB 1-3MHz; Techna NDT
       - (b) MTF904-50B/2M 1-3MHz; Olympus NDT
   - D. Reference Standard
     - (1) Refer to Part 6, 51-00-00, Procedure 14, for data about reference standard 1004.
3. **Prepare for the Inspection**
   - A. Open the number 2 window in the crew cabin to get access to the inspection area on the forward side of the E-F post. See Figure 1.
   - B. Remove sealant, loose paint, or dirt from the scan areas on the forward side of the E-F post. The inspection area is from the top of the E-F post to the bottom of the E-F post. The scan areas are immediately adjacent to the collars. See Figure 1.
4. **Instrument Calibration**
   - A. Calibrate the instrument as specified in Part 6, 51-00-00, Procedure 14.

BOEING PROPRIETARY - Copyright © Unpublished Work - See title page for details

(1) Use reference standard 1004 for the calibration. Do the probe scan around the titanium bolt on reference standard 1004 for the calibration.

5. Inspection Procedure

A. Refer to Part 6, 51-00-00, Procedure 14, paragraph 6, for general data on surface eddy current inspection procedures.

B. Do a circular probe scan on the E-F post around the collars on the forward side of the E-F post. Figure 1 shows all of the collar areas to be examined from the top of the post to the bottom of the post.

C. Do Paragraph 5.B. on the E-F post on the other side of the airplane.

6. Inspection Results

A. Refer to Part 6, 51-00-00, Procedure 14, paragraph 7, for instructions to help make an analysis of possible crack indications.

BOEING PROPRIETARY - Copyright © Unpublished Work - See title page for details

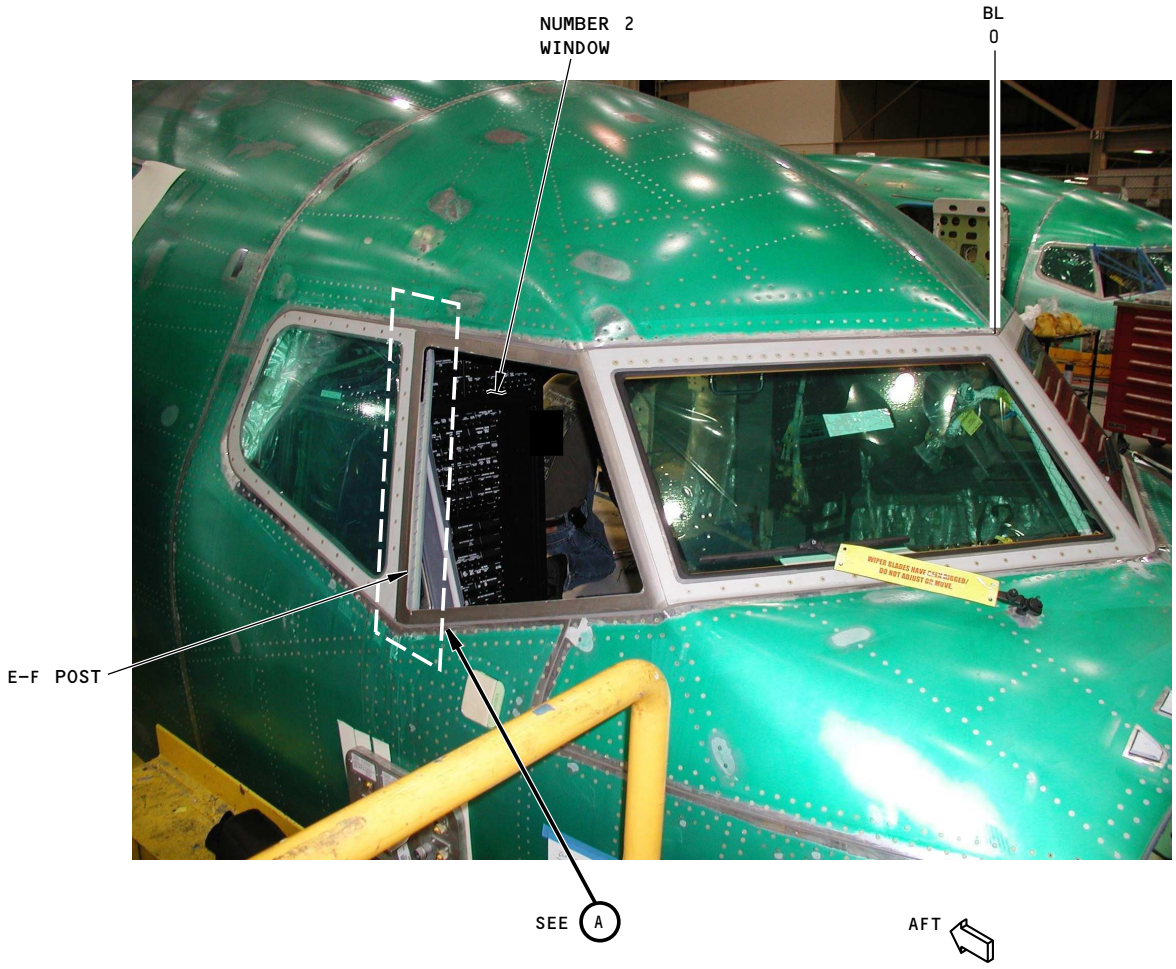

NOTES:

- THE FORWARD SIDE OF THE RIGHT E-F POST IS SHOWN ABOVE. THE LEFT E-F POST IS OPPOSITE. (THE NUMBER 2 WINDOW IS OPEN).

2160194 S0000472335_V1

Inspection Area on the E-F Post of the Crew Cabin
Figure 1 (Sheet 1 of 2)

BOEING PROPRIETARY - Copyright © Unpublished Work - See title page for details

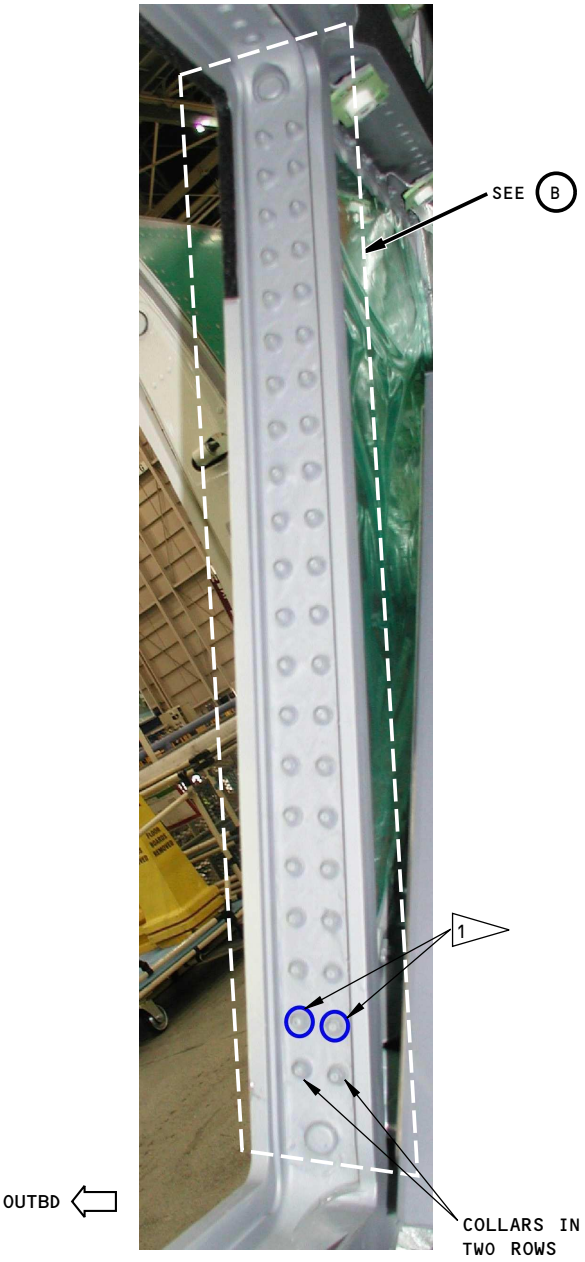

FORWARD SIDE OF THE E-F POST

A

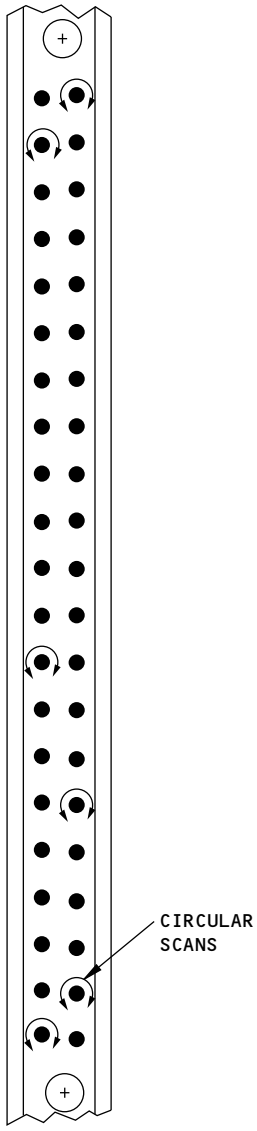

THE RIGHT E-F POST IS SHOWN;
THE LEFT E-F POST IS OPPOSITE

B

NOTES:

- ● COLLAR INSPECTION LOCATIONS
- • DO 360 DEGREE PROBE SCANS AROUND THE COLLAR INSPECTION LOCATIONS ON THE E-F POST

1 REMOVE THE SEALANT FROM THE SCAN AREAS AROUND ALL OF THE COLLARS IN THE INSPECTION AREA. THE PHOTO ABOVE SHOWS SEALANT IN THE INSPECTION AREA.

2160195 S0000472336_V1

Inspection Area on the E-F Post of the Crew Cabin
Figure 1 (Sheet 2 of 2)

BOEING PROPRIETARY - Copyright © Unpublished Work - See title page for details

PART 6 - EDDY CURRENT

A-B POST IN THE CREW CABIN AT BL 0

1. **Purpose**

   A. Use this procedure to examine the aluminum A-B post in the crew cabin for cracks. See Figure 1 for the inspection locations on the left and right sides of the A-B post at BL 0.

   B. The probe scans are done on the A-B post along the aft sides of the rivets (with a semicircular scan). The inspection area is from the bottom of the A-B post (B-D sill) to the top of the post (A-C sill).

   C. Use an impedance plane display instrument and a flexible pencil probe with a side mounted coil.

   D. 737 Damage Tolerance Rating (D626A001-DTR) Reference:

      (1) Item: 53-10-04-1

      (2) Item: 53-10-04-1a

2. **Equipment**

   A. General

      (1) Refer to Part 1, 51-01-00, for data about the equipment manufacturers.

   B. Instruments

      (1) Refer to Part 6, 51-00-00, Procedure 23, for instrument data and the instruments that were used to help prepare this procedure.

   C. Probes

      (1) Refer to Part 6, 51-00-00, Procedure 23, for probe data.

      (2) Use a flexible pencil probe (with a copper shaft that can bend) that:

         (a) Has a side mounted coil with a maximum probe drop of 0.030 inches (0.76 mm).

         (b) Has a maximum total coil and shaft thickness of 0.140 inches (3.60 mm). See Figure 2 for more data on this measurement.

         (c) Has a minimum shaft length of 5.0 inches (127 mm).

         (d) Can operate between 200 and 300 kHz.

      (3) The flexible probe that follows was used to help prepare this procedure.

         (a) MTF9003-60FX/50K-300K; Olympus NDT

      (4) A flexible probe is used for this inspection if the nut plate strips are installed (see Figure 1). If the nut plate strips are removed, then you can use a non-flexible 90 degree probe that:

         (a) Has a maximum probe diameter at the coil of 0.130 inch (3.3 mm).

         (b) Has a maximum probe drop of 0.50 inch (12.7 mm).

         (c) Has a minimum probe drop of 0.20 inch (5.0 mm).

         (d) Can operate between 200 and 300 kHz.

         (e) Is shielded.

   D. Reference Standard

      (1) Refer to Part 6, 51-00-00, Procedure 23, for data about reference standard 188A.

BOEING PROPRIETARY - Copyright © Unpublished Work - See title page for details

3. **Prepare for the Inspection**

   A. Remove the secondary structure at the A-B post in the crew cabin at BL 0. See Figure 2 to see the A-B post after the secondary structure is removed. It is not necessary to remove the nut plate strips shown in Figure 1. It is optional to remove the nut plate strips.

   B. Remove loose paint, dirt or sealant from the scan areas on the A-B post. The scan areas are along the aft half of the rivets on the A-B post from the upper sill (A-C sill) to the lower sill (B-D sill). The inspection areas are on the left and right sides of the A-B post. See Figure 1.

   C. Bend the flexible probe equivalent to the shape that is shown in Figure 2.

4. **Instrument Calibration**

   A. Calibrate the instrument as specified in Part 6, 51-00-00, Procedure 23.

      (1) Use reference standard 188A during calibration. Do the probe scans around the rivet head on reference standard 188A for the calibration.

5. **Inspection Procedure**

   A. Do semicircular probe scans on the A-B Post around the aft side of the rivets. Do the scans along the rivets that are between the top and bottom of the A-B Post (from the A-C sill to the B-D sill). See Figure 1 for these inspection areas.

      (1) Refer to Part 6, 51-00-00, Procedure 23, paragraph 6 for general data on surface eddy current inspection procedures.

      (2) If there are some areas without sufficient clearance during the probe scans, machine the probe as specified in Figure 2.

6. **Inspection Results**

   A. Refer to Part 6, 51-00-00, Procedure 23, paragraph 7 for instructions to help make an analysis of possible crack indications.

BOEING PROPRIETARY - Copyright © Unpublished Work - See title page for details

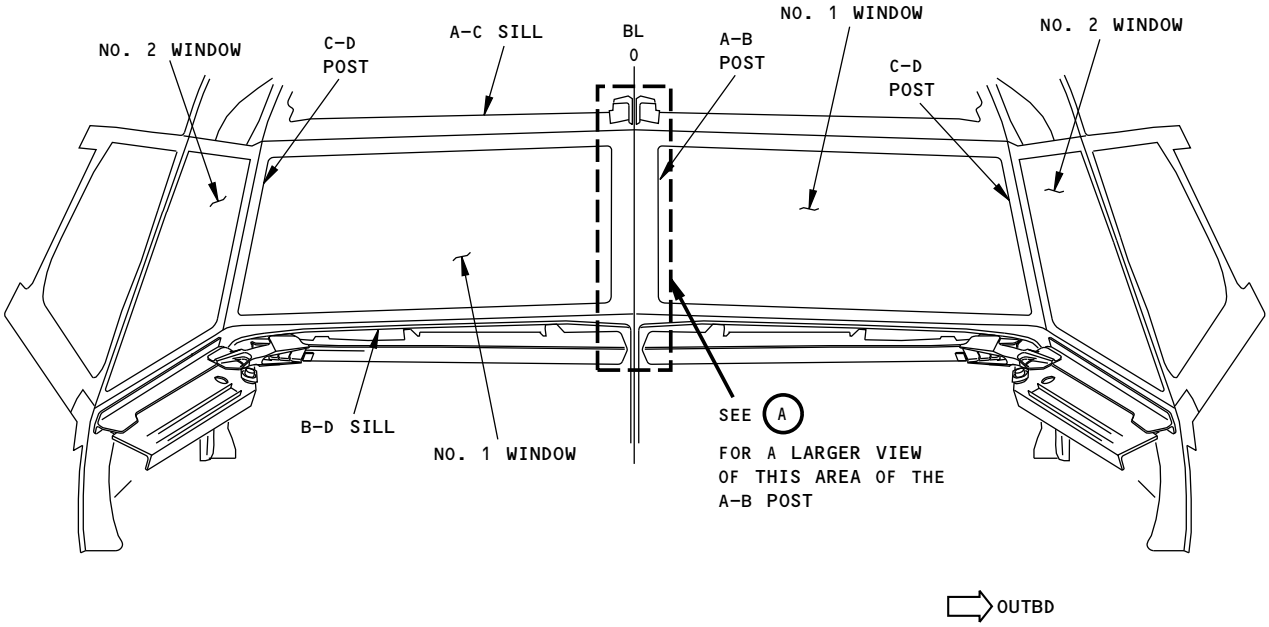

REAR VIEW OF THE WINDOW FRAMES OF THE CREW CAB
(THE VIEW FROM IN THE CREW CABIN AS YOU LOOK FORWARD)

2160517 S0000472338_V1

Inspection Areas
Figure 1 (Sheet 1 of 3)

BOEING PROPRIETARY - Copyright © Unpublished Work - See title page for details

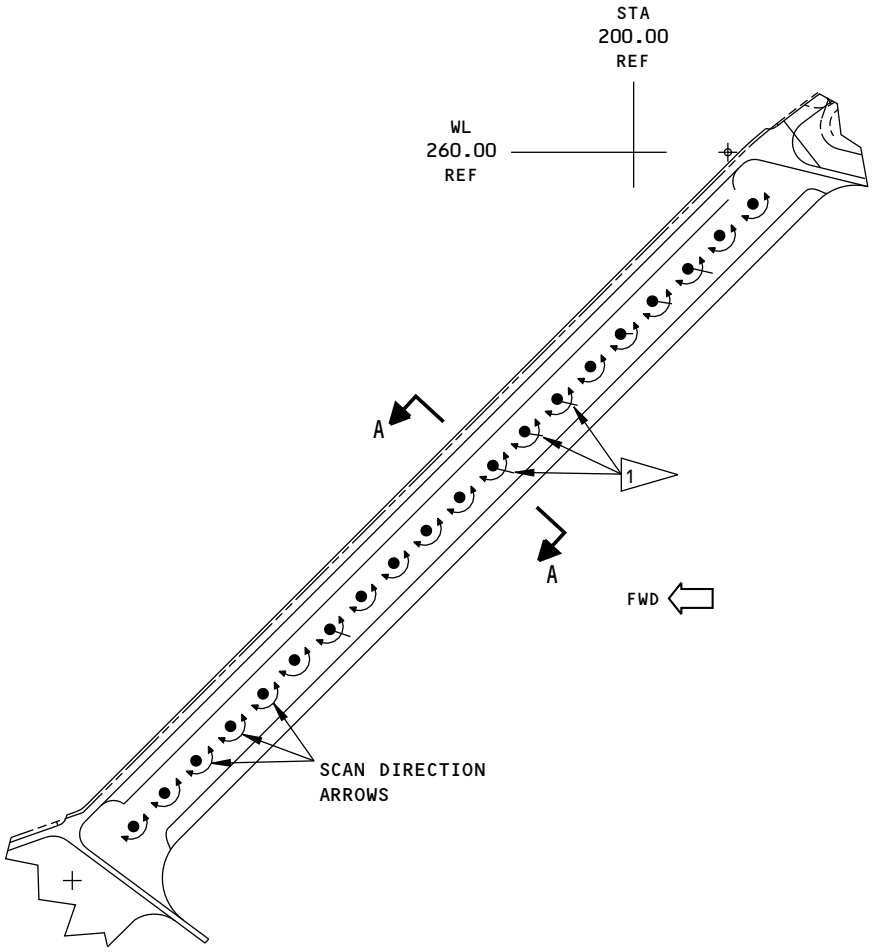

THE LEFT SIDE OF THE A-B POST IS SHOWN;
THE RIGHT SIDE IS EQUIVALENT

A

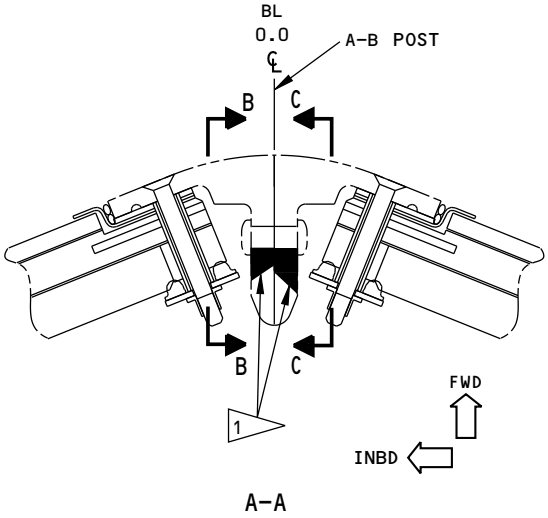

NOTES:

- INSPECTION FASTENERS. DO A SEMICIRCULAR PROBE SCAN AROUND ALL OF THE INSPECTION FASTENERS. ALSO DO THE SAME PROBE SCANS ON THE RIGHT SIDE OF THE A-B POST.

1 CRACKS SHOWN IN THE INSPECTION AREAS

2160518 S0000472339_V1

Inspection Areas
Figure 1 (Sheet 2 of 3)

BOEING PROPRIETARY - Copyright © Unpublished Work - See title page for details

A FLEXIBLE PROBE IS SHOWN ON THE LEFT SIDE OF THE A-B POST AS A PROBE SCAN IS DONE AROUND A RIVET B-B

A FLEXIBLE PROBE IS SHOWN ON THE RIGHT SIDE OF THE A-B POST AS A PROBE SCAN IS DONE AROUND A RIVET C-C

PROBE SCANS ON THE A-B POST

NOTES:

- IF THE NUTPLATE STRIPS ARE REMOVED, A NON-FLEXIBLE 90 DEGREE SHIELDED PROBE CAN BE USED FOR THIS INSPECTION.
- THE FULL INSPECTION AREAS ARE NOT SHOWN IN THE ABOVE PHOTOS.
- SEE FIGURE 2 IF THERE ARE SOME AREAS WITHOUT SUFFICIENT CLEARANCE FOR THE PROBE SCANS.

2160522 S0000472340_V1

Inspection Areas
Figure 1 (Sheet 3 of 3)

BOEING PROPRIETARY - Copyright © Unpublished Work - See title page for details

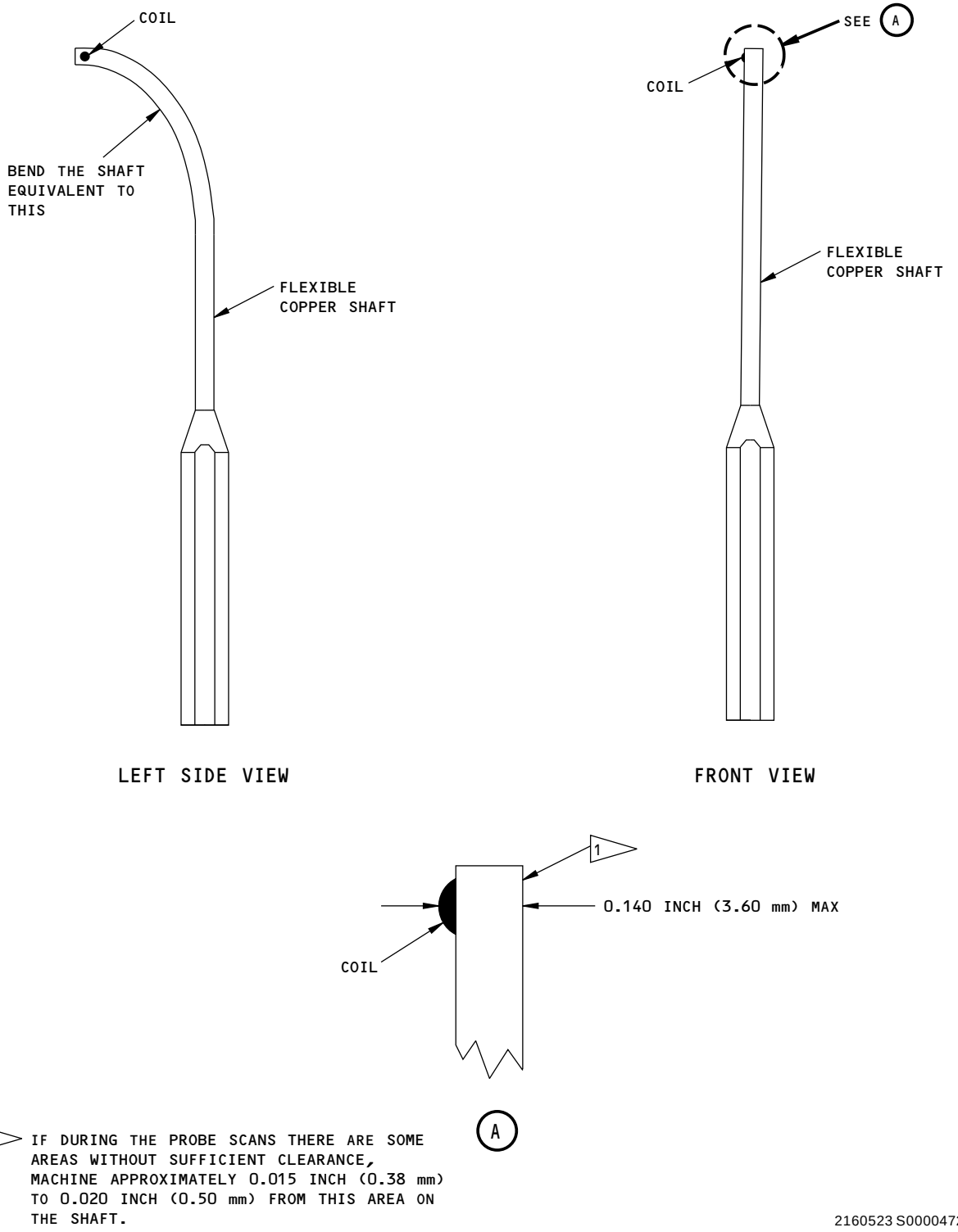

2160523 S0000472341_V1

Flexible Probe Data
Figure 2

BOEING PROPRIETARY - Copyright © Unpublished Work - See title page for details

SUBSURFACE INSPECTION OF THE B-D SILLS IN THE CREW CABIN FROM LBL 8.0 TO LBL 26.5 AND RBL 8.0 TO RBL 26.5 (LFEC)

1. Purpose

A. Use this subsurface eddy current procedure to examine the aluminum B-D sill of the crew cabin for cracks. See Figure 1 for the inspection area.

B. The subsurface probe scans are done through the outer skin to find cracks in the B-D sill. This procedure is used to examine the B-D sill from LBL 8.5 to LBL 26.5 and RBL 8.5 to RBL 26.5. The inspection areas from LBL 8.0 to LBL 8.5 and RBL 8.0 to RBL 8.5 are examined as specified in Part 6, 53-10-73. See Figure 1.

C. Use an impedance plane display instrument and a spot probe to do this procedure.

D. 737 Damage Tolerance Rating (D626A001-DTR) Reference:

(1) Item: 53-10-04-4

(2) Item: 53-10-04-4a

2. Equipment

A. General

(1) Refer to Part 1, 51-01-00, for data about the equipment manufacturers.

B. Instruments

(1) Refer to Part 6, 53-30-00, Procedure 5, for instrument data and instruments that were used to help prepare this procedure.

C. Probes

(1) Use a shielded spot probe that:

(a) Can be calibrated as specified in Paragraph 4.

(b) Can operate between 3 and 4 kHz.

(c) Has a maximum diameter of 0.31 inches (7.9 mm).

(2) The probes that follow were used to help prepare this procedure.

(a) NEC-4087-3; Olympus NDT (Reflection Probe)

(b) S/1 kHz – 50 kHz/.31; Olympus NDT (Reflection Probe)

D. Reference Standard – Use reference standard ANDT1051 that is shown in Part 6, 53-30-00, Procedure 5, Figure 1 and Figure 7.

E. Special Tools

(1) Use a nonconductive straightedge during calibration and the inspection (for Scan Rows 1 and 4).

(2) Use a circle template during the inspection to do semicircular scans around the rivets (for Scan Rows 2 and 3).

3. Prepare for the Inspection

A. Remove loose paint, dirt or sealant from the scan areas on the outer surface of the skin above the B-D sills. The scan areas on the B-D sills are from LBL 8.0 to LBL 26.5 and from RBL 8.0 to RBL 26.5. See Figure 1 for the scan areas on the skin above the B-D sills.

BOEING PROPRIETARY - Copyright © Unpublished Work - See title page for details

4. **Instrument Calibration**

A. Calibrate the instrument as specified in Part 6, 53-30-00, Procedure 5, paragraph 5 and as follows:

(1) Use reference standard ANDT1051 for the calibration.

(2) Refer to Part 6, 53-30-00, Procedure 5, Figure 2 for the probe positions. Use probe positions 1 and 2 for the calibration on the flush head rivet. This calibration is good for all 4 scan rows on the airplane skin (linear and semicircular scans).

5. **Inspection Procedure**

A. Refer to Part 6, 53-30-00, Procedure 5, paragraph 6, for general instructions on how to do subsurface eddy current inspections.

B. Examine the B-D sill for cracks along Scan Rows 1 and 4 (see Figure 1) as follows:

NOTE: Scan Row 1 is along the top edges of the top row of rivets. Scan Row 4 is along the lower edges of the lower row of rivets. See Figure 1 for these scan rows.

NOTE: It is important to start the probe scans at BL 26.5 and do the scan in the inboard direction. A high amplitude signal will occur at approximately BL 8.5. This is not a crack signal. This signal is caused by a titanium doubler and a subsurface gap that start at BL 8.5. See Figure 1, flagnote 2. Stop the probe scans when this high signal occurs at approximately BL 8.5.

(1) Examine the B-D sill for cracks along Scan Row 1 as follows:

(a) Put a nonconductive straightedge along the top edges of the top row of rivets as shown in Figure 1.

(b) Put the probe on the skin in the inspection area (Scan Row 1) at BL 26.5 so it is against the straightedge.

(c) Balance the instrument.

(d) Do a linear probe scan in an inboard direction from BL 26.5 to BL 8.5.

(e) Examine the B-D sill from BL 8.5 to BL 8.0 as specified in Part 6, 53-10-73.

NOTE: The inspection area from BL 8.5 to BL 8.0 cannot be examined with this procedure (Part 6, 53-10-76). If this procedure is used, a high indication will occur at approximately BL 8.5 that is caused by the edge of a subsurface titanium doubler and a subsurface gap. See the note in Paragraph 5.B. and Figure 1, flag note 2, for more instructions on this indication.

(2) Do Paragraph 5.B.(1) again to examine the B-D sill on the other side of the airplane.

(3) Examine the B-D sill for cracks along Scan Row 4 as follows:

(a) Put a nonconductive straightedge along the lower edges of the lower row of rivets as shown in Figure 1.

(b) Put the probe on the skin in the inspection area at BL 26.5 (Scan Row 4) so it is against the straightedge.

(c) Balance the instrument.

(d) Do a linear probe scan in the inspection area from BL 26.5 to BL 8.5.

(e) Examine the B-D sill from BL 8.5 to BL 8.0 as specified in Part 6, 53-10-73.

NOTE: See the note in Paragraph 5.B.(1)(e) for more data on the signal that will occur at approximately BL 8.5.

(4) Do Paragraph 5.B.(3) again to examine the B-D sill on the other side of the airplane.

BOEING PROPRIETARY - Copyright © Unpublished Work - See title page for details

C. Examine the B-D sill for cracks along Scan Rows 2 and 3 (see Figure 1) as follows:

NOTE: Scan Row 2 is along the bottom edges of the top row of rivets. Scan Row 3 is along the top edges of the bottom row of rivets. See Figure 1 for these scan rows. Refer to Part 6, 53-30-00, Procedure 5, Paragraph 6 for instructions on how to do probe scans with a circle template.

(1) Put a nonconductive circle template around one of the fasteners in the inspection area on the top row at BL 26.5. Make sure you use the correct template diameter for your probe.

(2) Put the probe adjacent to the rivet in the circle template and balance the instrument.

(3) Do a semicircular scan around the rivet as shown in Figure 1, Scan Row 2.

(4) Do Paragraph 5.C.(3) around all of the rivets in the inspection area in Scan Row 2 (BL 26.5 to BL 8.5).

(5) Examine the B-D sill from BL 8.5 to BL 8.0 in Scan Row 2 as specified in Part 6, 53-10-73. The inspection area from BL 8.5 to BL 8.0 cannot be examined with this procedure.

(6) Put the nonconductive circle template around one of the fasteners in the inspection area on the bottom row at BL 26.5 (adjacent to the Paragraph 5.C.(1) fastener location).

(7) Put the probe adjacent to the rivet (on Scan Row 3) in the circle template and balance the instrument.

(8) Do a semicircular scan around the rivet as shown in Figure 1, Scan Row 3.

(9) Do Paragraph 5.C.(8) around all of the rivets in the inspection area in Scan Row 3 (BL 8.5 to BL 26.5).

(10) Examine the B-D sill from BL 8.5 to BL 8.0 as specified in Part 6, 53-10-73. The inspection area from BL 8.5 to BL 8.0 cannot be examined with this procedure.

(11) Do Paragraph 5.C.(1) thru Paragraph 5.C.(10) again to examine the B-D sill on the other side of the airplane.

6. Inspection Results

A. See Part 6, 53-30-00, Procedure 5, paragraph 7, for instructions to help make an analysis of the inspection results

B. Make sure the signals are not caused because the probe is moved too near to the edge of the skin or the subsurface edge of the B-D sill. Try to simulate these signals on reference standard ANDT1051 to see if the signals are caused by edge effect. Also make sure the signal was not caused by edge effect from a rivet edge.

C. If the indications are not from the edge effect of the skin or the edge of the B-D sill, get access to the lower surface of the B-D sills and do a surface eddy current inspection as follows:

(1) Do a surface inspection of the B-D sills as specified in Part 6, 53-10-73. Do a circular probe scan around the end of the rivet that caused the subsurface eddy current indication to occur.

BOEING PROPRIETARY - Copyright © Unpublished Work - See title page for details

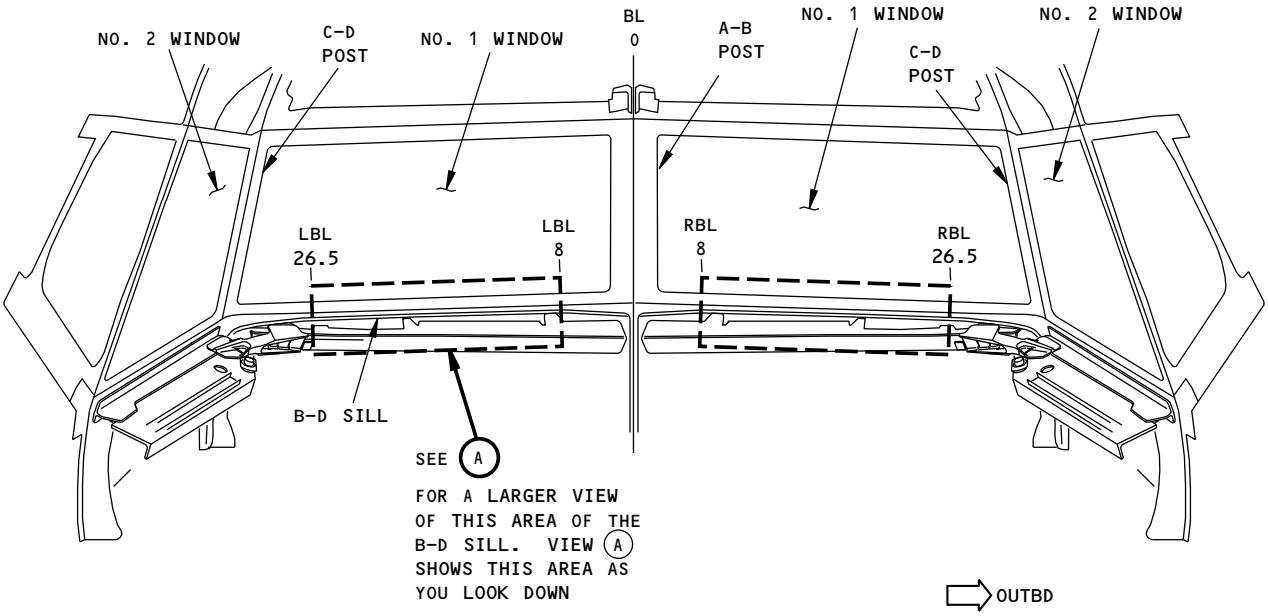

REAR VIEW OF THE WINDOW FRAMES OF THE CREW CAB
(THE VIEW AS YOU LOOK FORWARD)

NOTES:

- THE SUBSURFACE INSPECTION OF THE B-D SILL IS DONE THROUGH THE OUTER SKIN

2160525 S0000472344_V1

Inspection Areas
Figure 1 (Sheet 1 of 3)

BOEING PROPRIETARY - Copyright © Unpublished Work - See title page for details

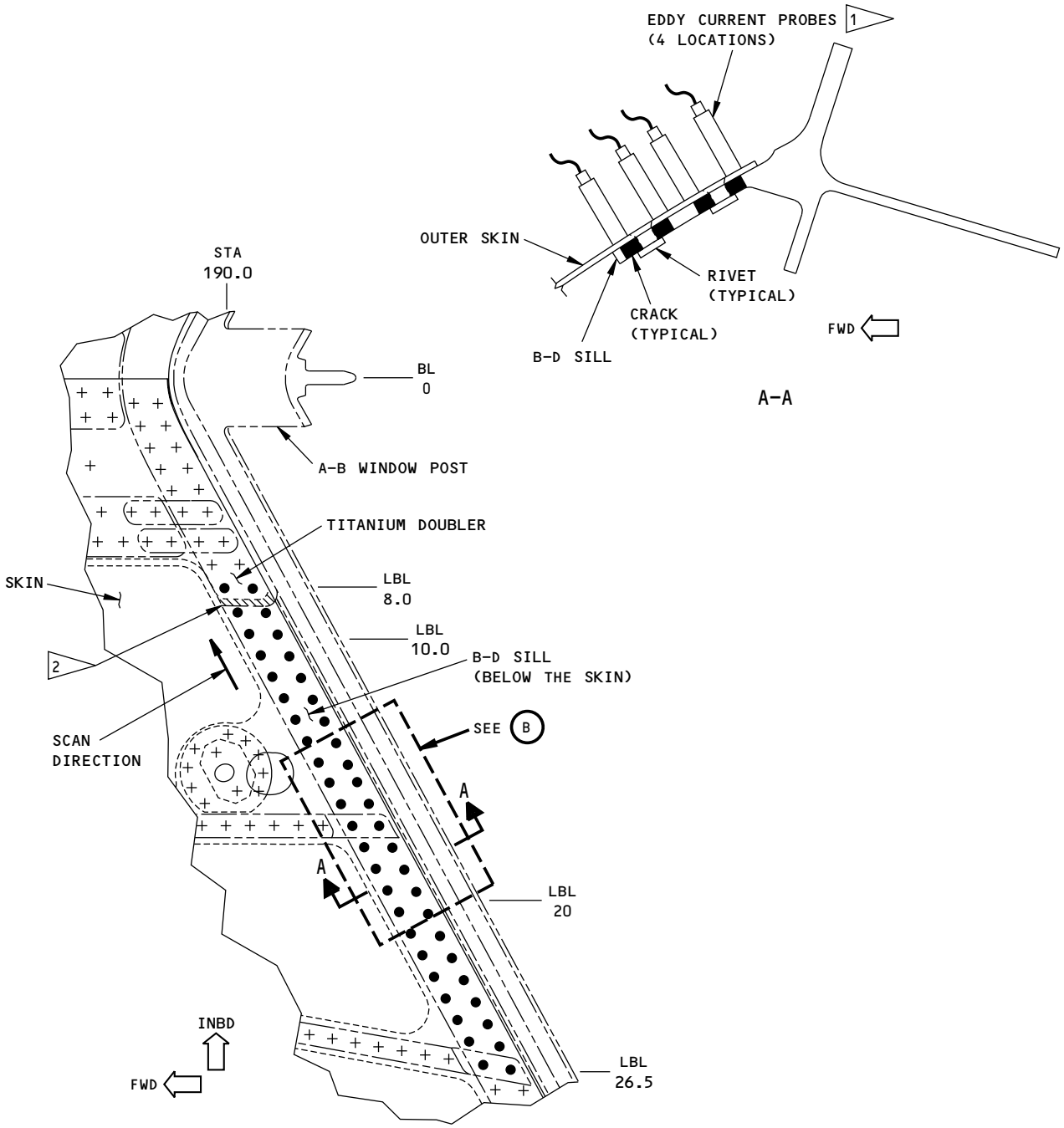

VIEW OF THE INSPECTION AREA ON THE LEFT B-D SILL AS YOU LOOK DOWN.
THE B-D SILL ON THE RIGHT SIDE IS OPPOSITE

A

2160526 S0000472345_V1

Inspection Areas
Figure 1 (Sheet 2 of 3)

BOEING PROPRIETARY - Copyright © Unpublished Work - See title page for details

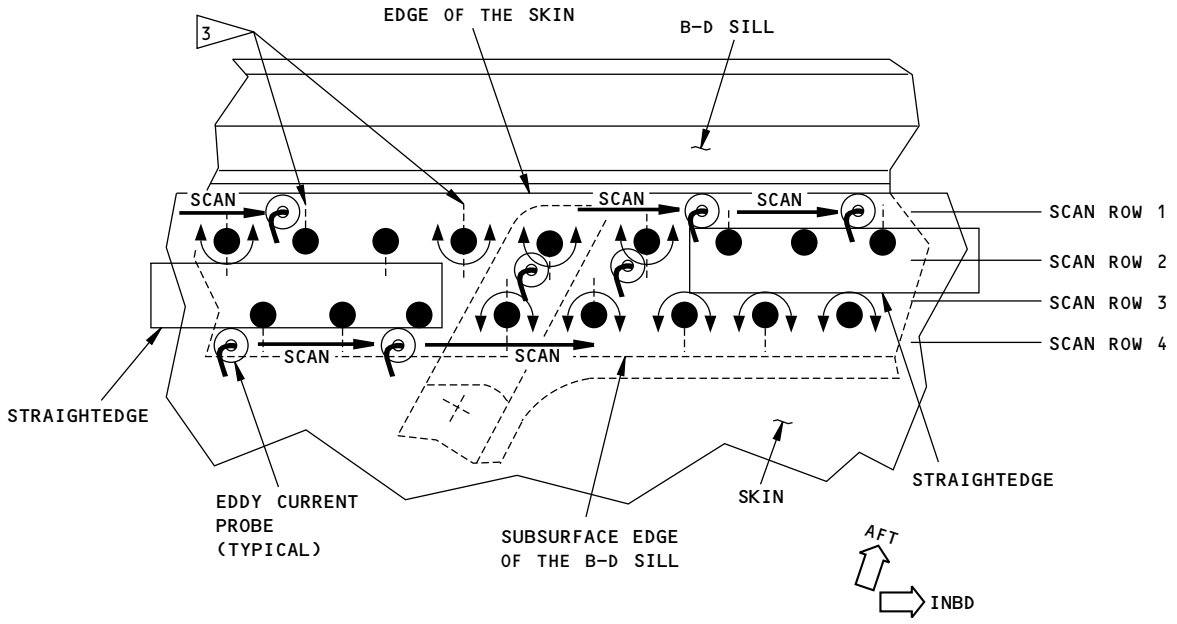

THIS IS AN EXTERNAL VIEW OF THE INSPECTION AREA AS YOU LOOK DOWN

B

NOTES:

- RIVETS IN THE INSPECTION AREA
- SCAN ROWS 1 AND 4:
  PUT THE EDGE OF A NONCONDUCTIVE STRAIGHTEDGE ALONG THE EDGE OF THE RIVETS AND DO LINEAR PROBE SCANS AS SHOWN ABOVE. DO THE PROBE SCAN IN AN INBOARD DIRECTION. DO NOT DO SEMICIRCULAR PROBE SCANS HERE. THIS WILL CAUSE AN EDGE EFFECT SIGNAL FROM THE SKIN EDGE AND SUBSURFACE EDGE OF THE B-D SILL.
- SCAN ROWS 2 AND 3:
  DO SEMICIRCULAR PROBE SCANS AS SHOWN ABOVE. MAKE SURE THE PROBE DOES NOT GO ABOVE THE SKIN EDGE OR THE SUBSURFACE EDGE OF THE B-D SILL OR AN EDGE EFFECT SIGNAL WILL OCCUR. USE A CIRCLE TEMPLATE DURING THE SCANS.
- THE SUBSURFACE TITANIUM DOUBLER EDGE WILL CAUSE A HIGH INDICATION TO OCCUR AT APPROXIMATELY BL 8.5 (SEE FLAG NOTE 2 FOR INSTRUCTIONS)

1 SEE VIEW B FOR THE SCAN DIRECTIONS AT ALL 4 SCAN ROWS.

2 THE SUBSURFACE TITANIUM DOUBLER EDGE IS AT APPROXIMATELY BL 8.5. WHEN THE PROBE GOES ABOVE THE TITANIUM DOUBLER EDGE (AT BL 8.5), A HIGH INDICATION WILL OCCUR. THIS IS NOT A CRACK INDICATION. STOP THE PROBE SCAN AT BL 8.5 AND DO THE SURFACE EDDY CURRENT INSPECTION IN PART 6, 53-10-73 ON THE LOWER SURFACE OF THE B-D SILL FROM BL 8.5 TO BL 8.0.

3 SUBSURFACE CRACKS IN THE B-D SILL

2160527 S0000472346_V1

Inspection Areas
Figure 1 (Sheet 3 of 3)

BOEING PROPRIETARY - Copyright © Unpublished Work - See title page for details

PART 6 - EDDY CURRENT

VERTICAL FIN - AFT ATTACHMENT FITTINGS OF THE FRONT SPAR AT THE BS 1016 BULKHEAD

1. Purpose

A. Use this procedure to do a surface inspection to find cracks in the aft attachment fittings at RBL 11.55 and LBL 11.55 of the BS 1016 bulkhead. The aft attachment fittings are installed at the front spar of the vertical fin. See Figure 1.

B. Examine the aft attachment fittings at the four fastener locations, for each fitting, where the splice fittings for the fail-safe chord are attached to the forward attachment fittings. See Figure 1.

C. 737 Damage Tolerance Rating (D626A001-DTR) Reference:

(1) Item: 53-80-02-1a

2. Equipment

A. General

(1) Use inspection equipment that can be calibrated on the reference standard as specified in Paragraph 4.

(2) Refer to Part 1, 51-01-00, for data about the equipment manufacturers.

B. Instrument

(1) Use an eddy current instrument that:

(a) Has an impedance plane display.

(b) Operates at a frequency range between 50 and 500 kHz.

(2) The instruments that follow were used to help prepare this procedure.

(a) Phasec 2d; GE Inspection Technologies

(b) Nortec 2000D; Olympus NDT

C. Probes

(1) Use a shielded, right angle or straight pencil probe that has a maximum diameter of 0.13 inch (3.2 mm). Refer to Part 6, 51-00-00, Procedure 23, paragraph 3.C, for data about probe selection.

(a) The probes that follow were used to help prepare this procedure.

1) TPEN95-5B; Techna NDT (right angle)

2) MTF-40FX; NDT Engineering Corp. (Olympus NDT) (straight)

D. Reference Standard

(1) Use reference standard 188A (or an equivalent) as given in Part 6, 51-00-00, Procedure 23, paragraph 3.D.

3. Prepare for the Inspection

A. Identify the probe inspection surfaces shown in Figure 1.

B. Clean the inspection areas, remove sealant as necessary to get the probe adjacent to the fastener collar. It is not necessary to remove paint.

BOEING PROPRIETARY - Copyright © Unpublished Work - See title page for details

4. **Instrument Calibration**

   A. Calibrate the equipment as specified in Part 6, 51-00-00, Procedure 23, paragraph 5. Use reference standard 188A (or an equivalent) and the aluminum rivet.

5. **Inspection Procedure**

   A. Do the surface inspection at the fastener locations as follows:

      (1) Calibrate the instrument as specified in Paragraph 4.A.

      (2) Make a complete scan around the fastener collar to examine the aft attachment fittings for cracks. See Figure 1 for the inspection areas.

         (a) Refer to Part 6, 51-00-00, Procedure 23, paragraph 6, for the inspection procedure. Refer to paragraph 6.E.(3)(c) to examine around a fastener head or collar.

6. **Inspection Results**

   A. Refer to Part 6, 51-00-00, Procedure 23, paragraph 7, for instructions to help make an analysis of indications that occur during the inspection.

BOEING PROPRIETARY - Copyright © Unpublished Work - See title page for details

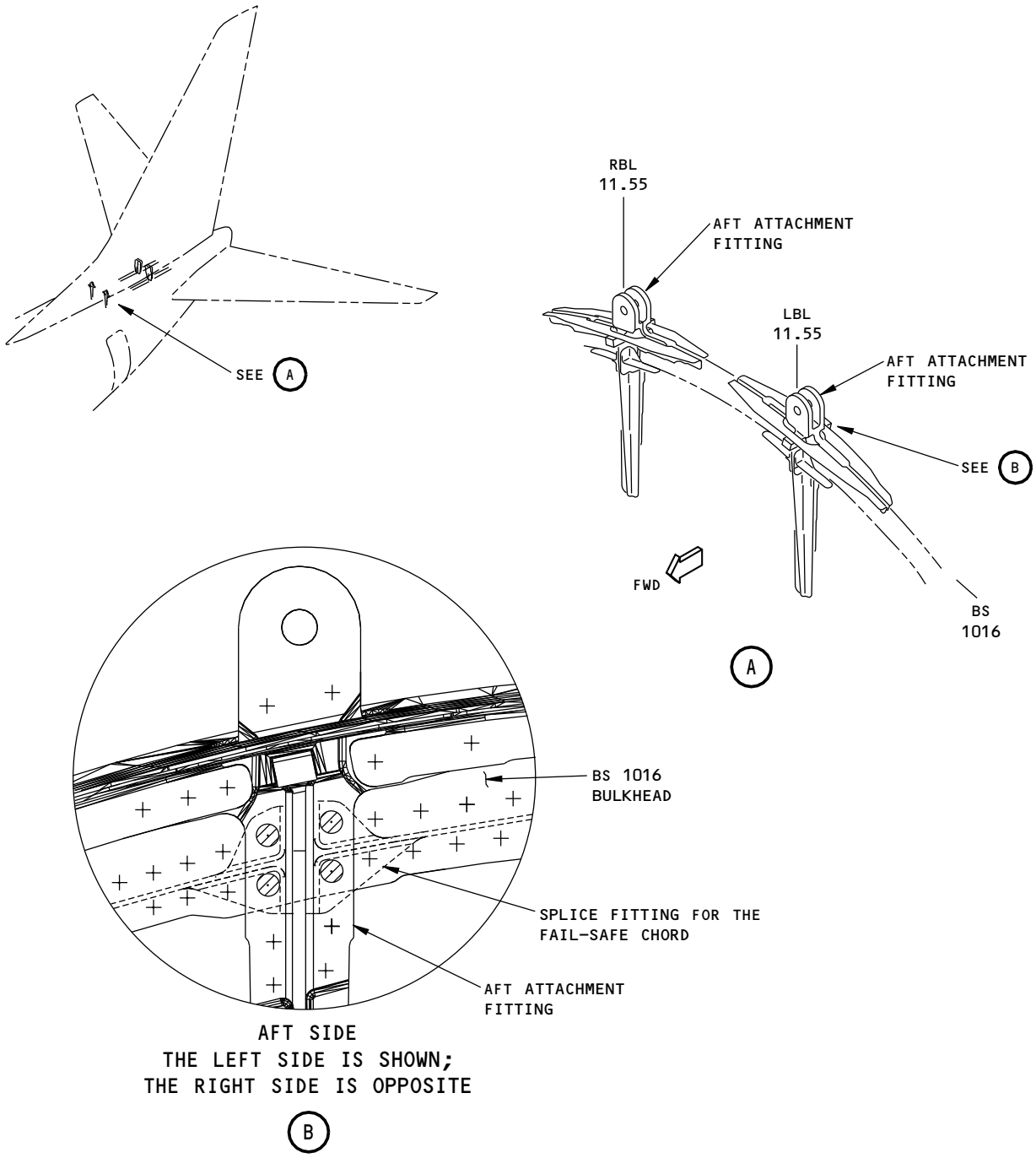

NOTES:

⊘ FASTENER LOCATIONS TO EXAMINE

2160529 S0000472354_V1

Vertical Fin Attachment Fittings at the BS 1016 Fuselage Bulkhead
Figure 1

BOEING PROPRIETARY - Copyright © Unpublished Work - See title page for details

VERTICAL FIN - FORWARD AND AFT BULKHEAD ATTACHMENT FITTINGS AT THE FRONT SPAR OF THE BS 1016 BULKHEAD

1. Purpose

A. Use this procedure to do a surface inspection to find cracks in the forward and aft bulkhead attachment fittings at RBL 11.55 and LBL 11.55 of the BS 1016 bulkhead. The forward and aft bulkhead attachment fittings are installed at the front spar of the vertical fin. See Figure 1.

B. Examine the forward and aft bulkhead attachment fittings around the bolt heads and nuts that attach the fittings to the front spar of the vertical fin. See Figure 1.

C. 737 Damage Tolerance Rating (D626A001-DTR) Reference:

(1) Item: 53-80-02-2

2. Equipment

A. General

(1) Use inspection equipment that can be calibrated on the reference standard as specified in Paragraph 4.

(2) Refer to Part 1, 51-01-00, for data about the equipment manufacturers.

B. Instrument

(1) Use an eddy current instrument that:

(a) Has an impedance plane display.

(b) Operates at a frequency range between 50 and 500 kHz.

(2) The instruments that follow were used to help prepare this procedure.

(a) Phasec 2d; GE Inspection Technologies

(b) Nortec 2000D; Olympus NDT

C. Probes

(1) Use a shielded, right angle or straight pencil probe that has a maximum diameter of 0.13 inch (3.2 mm). Refer to Part 6, 51-00-00, Procedure 23, paragraph 3.C, for data about probe selection.

(a) The probes that follow were used to help prepare this procedure.

1) TPEN95-5B; Techna NDT (right angle)

2) MTF-40FX; NDT Engineering Corp. (Olympus NDT) (straight)

D. Reference Standard

(1) Use reference standard 188A (or an equivalent) as given in Part 6, 51-00-00, Procedure 23, par. 3.D.

3. Prepare for the Inspection

A. Identify the probe inspection surfaces shown in Figure 1.

B. Remove access panels 323AL and 323AR to get access to the inspection areas.

C. Clean the inspection areas, remove sealant as necessary to get the probe adjacent to the fastener collar. It is not necessary to remove paint.

BOEING PROPRIETARY - Copyright © Unpublished Work - See title page for details

4. Instrument Calibration

A. Calibrate the equipment as specified in Part 6, 51-00-00, Procedure 23, paragraph 5. Use reference standard 188A (or an equivalent) and the aluminum rivet.

5. Inspection Procedure

A. Do the surface inspection at the fastener locations as follows:

(1) Calibrate the instrument as specified in Paragraph 4.A.

(2) Make complete scans around the fastener head and nut to examine the forward and aft bulkhead attachment fittings for cracks. Use the washers as a probe guide. See Figure 1 for the inspection areas.

(a) Refer to Part 6, 51-00-00, Procedure 23, paragraph 6, for the inspection procedure. Refer to paragraph 6.E.(3)(c) to examine around a fastener head or collar.

6. Inspection Results

A. Refer to Part 6, 51-00-00, Procedure 23, paragraph 7, for instructions to help make an analysis of indications that occur during the inspection.

BOEING PROPRIETARY - Copyright © Unpublished Work - See title page for details

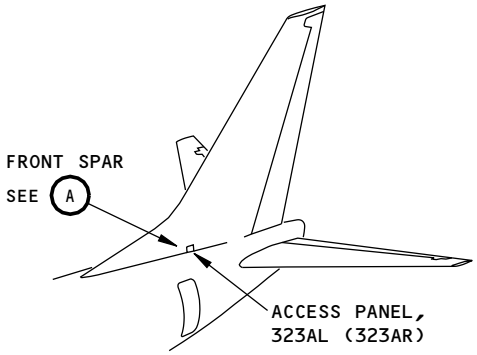

VERTICAL FIN
(THE LEFT SIDE IS SHOWN;
THE RIGHT SIDE IS EQUIVALENT)

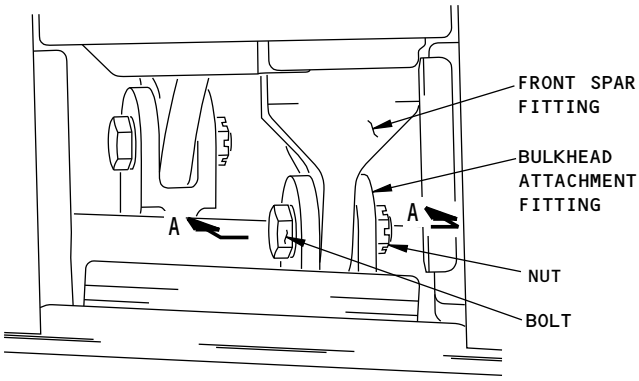

VERTICAL FIN - FRONT SPAR
(ACCESS PANEL REMOVED)

A

FWD

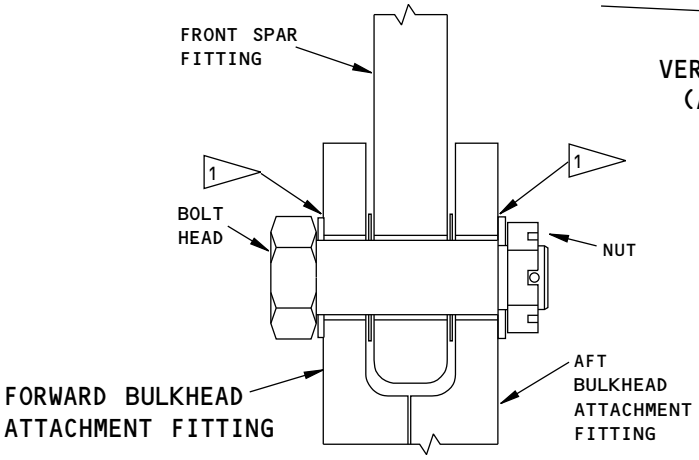

FRONT SPAR FITTINGS
A-A

FWD

NOTES:

1 EXAMINE THE FORWARD AND AFT BULKHEAD ATTACHMENT FITTINGS FOR CRACKS AROUND THE BOLT HEAD AND NUT. USE THE WASHER AS A PROBE GUIDE.

2160532 S0000472356_V1

Forward and Aft Bulkhead Attachment Fittings at the BS 1016 Fuselage Bulkhead of the Vertical Fin
Figure 1

BOEING PROPRIETARY - Copyright © Unpublished Work - See title page for details

FUSELAGE - STRINGER SPLICE FITTINGS - S-9L TO S-9R AT BS 1016 PRESSURE BULKHEAD

1. Purpose

A. Use this procedure to do a surface inspection to find cracks in the stringer splice fittings from stringer locations S-9L thru S-9R on the forward and aft sides of the fuselage BS 1016 pressure bulkhead. See Figure 1.

B. Examine the forward and aft stringer splice fittings around the heads of the first two fastener locations that attach the stringer to the stringer splice fitting. See Figure 1.

C. 737 Damage Tolerance Rating (D626A001-DTR) Reference:

(1) Item: 53-80-03-1

2. Equipment

A. General

(1) Use inspection equipment that can be calibrated on the reference standard as specified in Paragraph 4.

(2) Refer to Part 1, 51-01-00, for data about the equipment manufacturers.

B. Instrument

(1) Use an eddy current instrument that:

(a) Has an impedance plane display.

(b) Operates at a frequency range between 50 and 500 kHz.

(2) The instruments that follow were used to help prepare this procedure.

(a) Phasec 2d; GE Inspection Technologies

(b) Nortec 500; Olympus NDT

C. Probes

(1) Use a shielded, right angle pencil probe that has a maximum diameter of 0.13 inch (3.2 mm). Refer to Part 6, 51-00-00, Procedure 23, paragraph 3.C, for data about probe selection.

(a) The probes that follow were used to help prepare this procedure.

1) TPEN925-5; Techna NDT

2) MTF902-50; NDT Engineering Corp. (Olympus NDT)

D. Reference Standard

(1) Use reference standard 188A (or an equivalent) as given in Part 6, 51-00-00, Procedure 23, par. 3.D.

3. Prepare for the Inspection

A. Identify the inspection areas shown in Figure 1.

B. Get access to forward and aft sides of the BS 1016 pressure bulkhead.

C. Clean the inspection areas. Remove sealant as necessary to get the probe adjacent to the fastener. It is not necessary to remove paint.

BOEING PROPRIETARY - Copyright © Unpublished Work - See title page for details

4. Instrument Calibration

A. Calibrate the equipment as specified in Part 6, 51-00-00, Procedure 23, paragraph 5. Use reference standard 188A (or an equivalent) and the aluminum rivet.

5. Inspection Procedure

A. Do the surface inspection at stringer splice fitting locations S-9L thru S-9R as follows:

(1) Calibrate the instrument as specified in Paragraph 4.A.

(2) Make complete scans around the fastener head of the first two fastener locations of the forward and aft stringer splice fittings. See Figure 1 for the inspection areas.

(a) Refer to Part 6, 51-00-00, Procedure 23, paragraph 6, for the inspection procedure. Refer to paragraph 6.E.(3)(c) to examine around a fastener head or collar.

6. Inspection Results

A. Refer to Part 6, 51-00-00, Procedure 23, paragraph 7, for instructions to help make an analysis of indications that occur during the inspection.

BOEING PROPRIETARY - Copyright © Unpublished Work - See title page for details

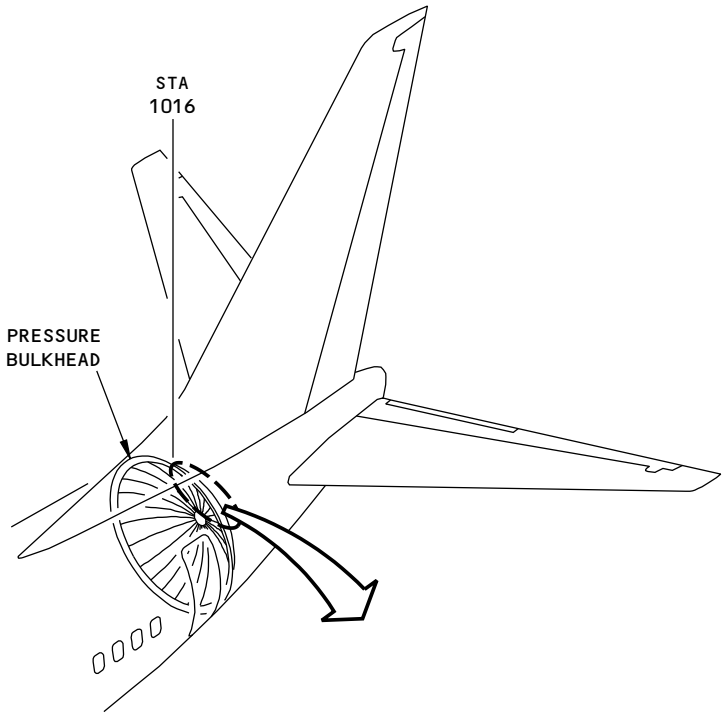

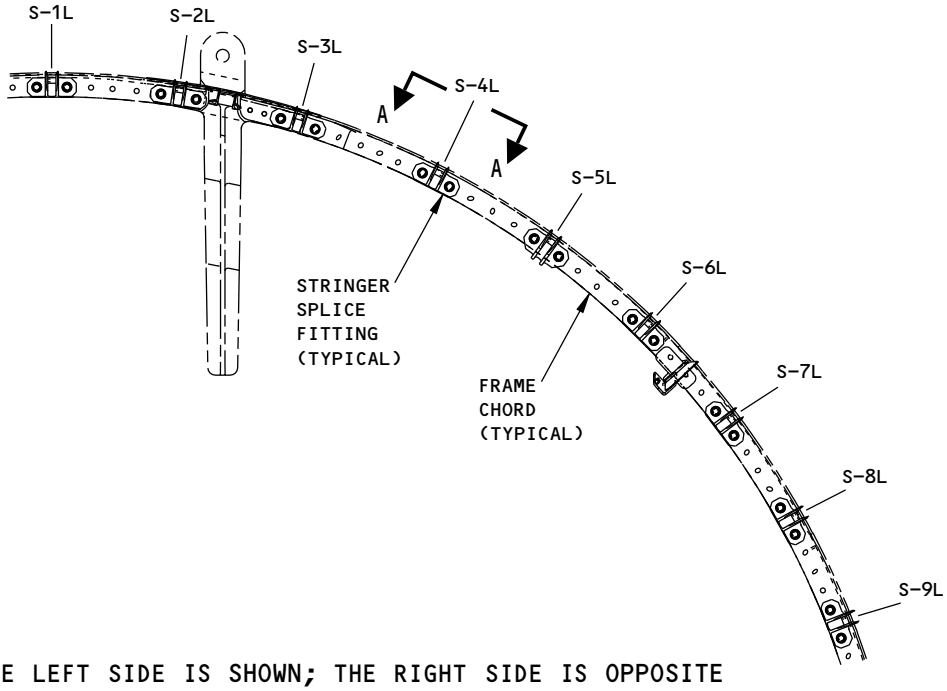

THE LEFT SIDE IS SHOWN; THE RIGHT SIDE IS OPPOSITE
(PRESSURE WEB NOT SHOWN)

2160535 S0000472359_V1

Stringer Splice Fittings at BS 1016, S-9L to S-9R
Figure 1 (Sheet 1 of 2)

BOEING PROPRIETARY - Copyright © Unpublished Work - See title page for details

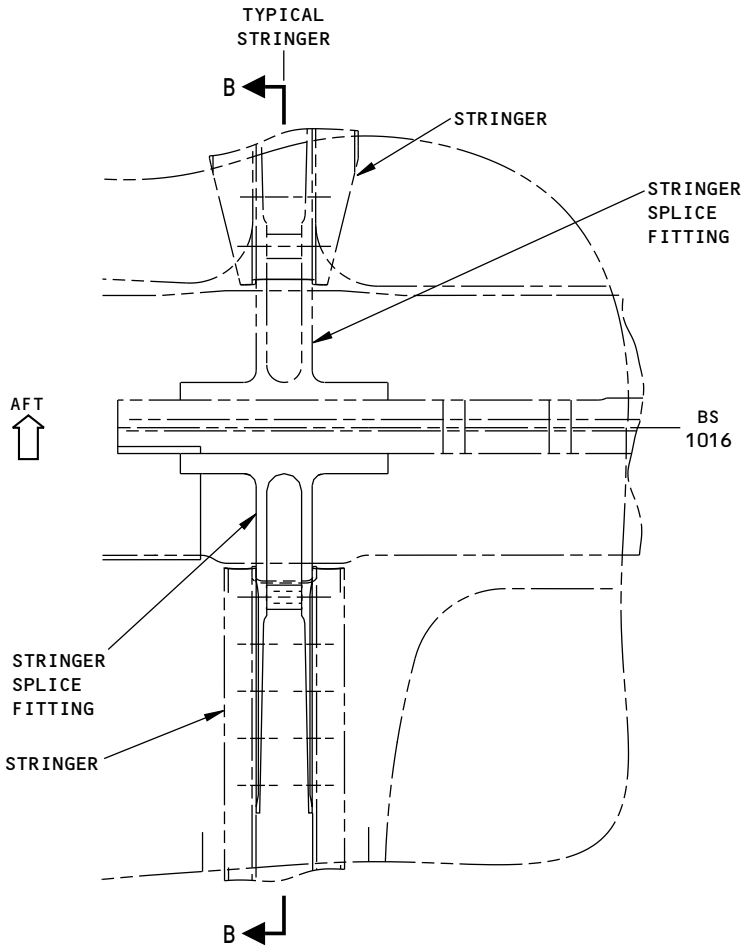

TYPICAL STRINGER LOCATION
A-A

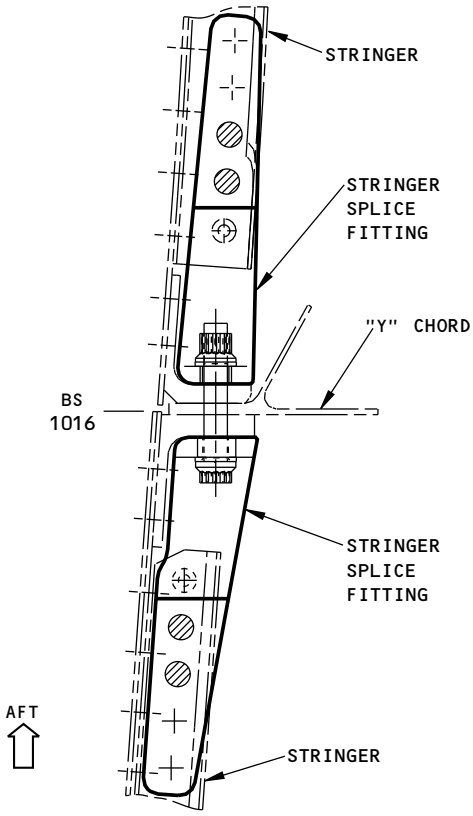

B-B

NOTES:

FASTENER LOCATIONS TO EXAMINE. MAKE COMPLETE SCANS AROUND THE FASETNER HEAD.

2160536 S0000472360_V1

Stringer Splice Fittings at BS 1016, S-9L to S-9R
Figure 1 (Sheet 2 of 2)

BOEING PROPRIETARY - Copyright © Unpublished Work - See title page for details

PART 6 - EDDY CURRENT

FORWARD CARGO DOOR SURROUND - INNER CHORD OF THE FORWARD AND AFT EDGE FRAMES AT S-18R

1. Purpose

A. Use this open hole eddy current procedure to help find cracks in the inner chord of the forward and aft edge frames of the forward cargo door surround for the 737NG. See Figure 1 for the inspection area.

B. 737 Damage Tolerance Rating (D626A001-DTR) Reference:

(1) Item: 53-30-08-5

2. Equipment

A. General

(1) Use inspection equipment that can be calibrated on the reference standard as specified in Paragraph 4.

(2) Refer to Part 1, 51-01-00 for data about the equipment manufacturers.

B. Instrument

(1) Use an eddy current instrument that:

(a) Has an impedance plane display.

(b) Operates at a frequency range of 300 to 500 kHz.

(c) Has rotary scanner function.

(2) The instruments that follow were used to help prepare this procedure.

(a) Nortec 2000D+; Olympus Engineering Corp.

(b) Phasec 2200; GE Sensing and Inspection Technologies

C. Probes

(1) Use probes that can be expanded to examine 0.188 inch (4.76 mm) diameter holes. Refer to Part 6, 51-00-00, Procedure 16, paragraph 3.B, for data about probe selection.

(2) The probes that follow were used to help prepare this procedure.

(a) BYU-12/16; Olympus NDT Engineering Corp: 3/16-1/4 inch (4.76-6.35 mm)

D. Reference Standard

(1) Use reference standard NDT1016 (or an equivalent) as given in Part 6, 51-00-00, Procedure 16, paragraph 3.C.

3. Prepare for the Inspection

A. Refer to Figure 1 for the inspection areas and remove the fasteners from the holes to be examined.

B. Prepare the holes for inspection as specified in Part 6, 51-00-00, Procedure 16, paragraph 4.

4. Instrument Calibration

A. Calibrate the equipment as specified in Part 6, 51-00-00, Procedure 16, paragraph 5, and as follows:

(1) Calibrate the equipment for the specific hole diameter to be examined. Use the reference standard specified in Paragraph 2.D. (or an equivalent).

BOEING PROPRIETARY - Copyright © Unpublished Work - See title page for details

5. **Inspection Procedure**

A. Examine the inner chord of the forward and aft edge frames on the forward cargo door surround for cracks at S-18R.

(1) Find the inspection area shown in Figure 1.

(2) Calibrate the instrument as specified in Paragraph 4.

(3) Examine one fastener hole on the inner chord of the aft edge frame on the forward cargo door surround as specified in Part 6, 51-00-00, Procedure 16, paragraph 6.

(4) Examine eight fastener holes on the inner chord of the forward edge frame on the forward cargo door surround as specified in Part 6, 51-00-00, Procedure 16, paragraph 6.

6. **Inspection Results**

A. Refer to Part 6, 51-00-00, Procedure 16, paragraph 7, for instructions to help make an analysis of the indications that occur during the inspection.

BOEING PROPRIETARY - Copyright © Unpublished Work - See title page for details

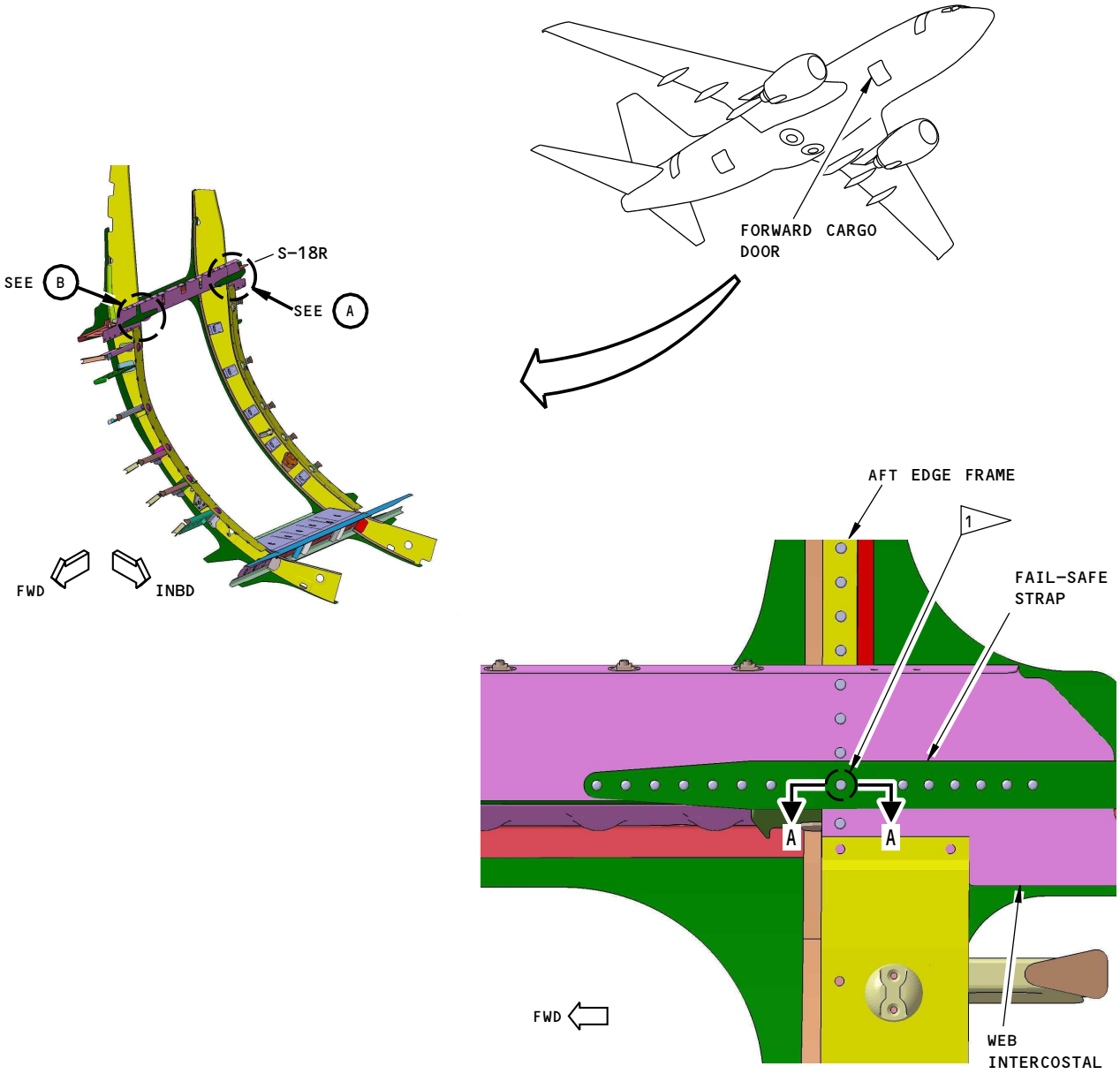

NOTES:

1 DTR CHECK FORM ITEM 53-30-08-5 INSPECTION AREA 1. THERE IS ONE HOLE TO EXAMINE THE INNER CHORD FOR CRACKS AT THE AFT EDGE FRAME OF THE FORWARD CARGO DOOR AT S-18R. THE FASTENER MUST BE REMOVED TO DO AN OPEN HOLE EDDY CURRENT INSPECTION.

2160537 S0000472362_V2

Inspection Location
Figure 1 (Sheet 1 of 2)

BOEING PROPRIETARY - Copyright © Unpublished Work - See title page for details

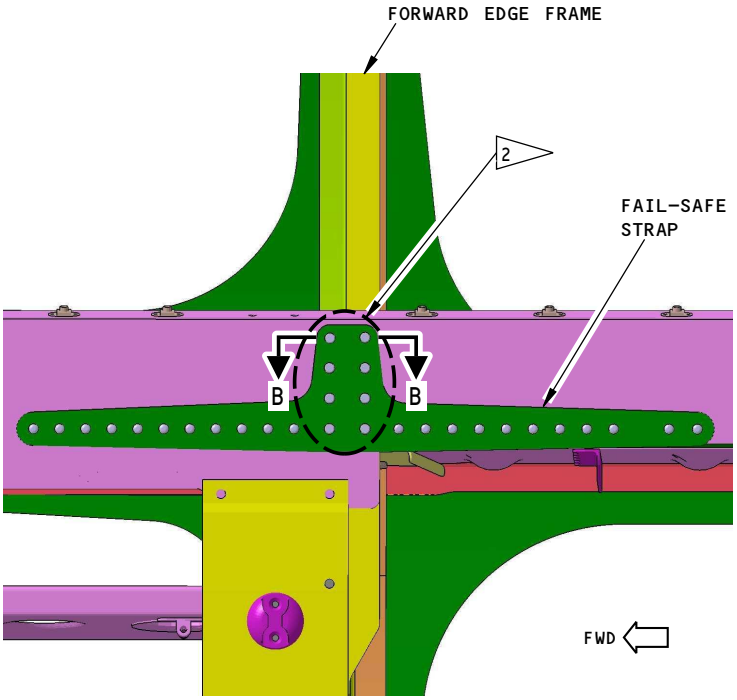

THE FORWARD EDGE FRAME AND
FAIL-SAFE STRAP ARE SHOWN

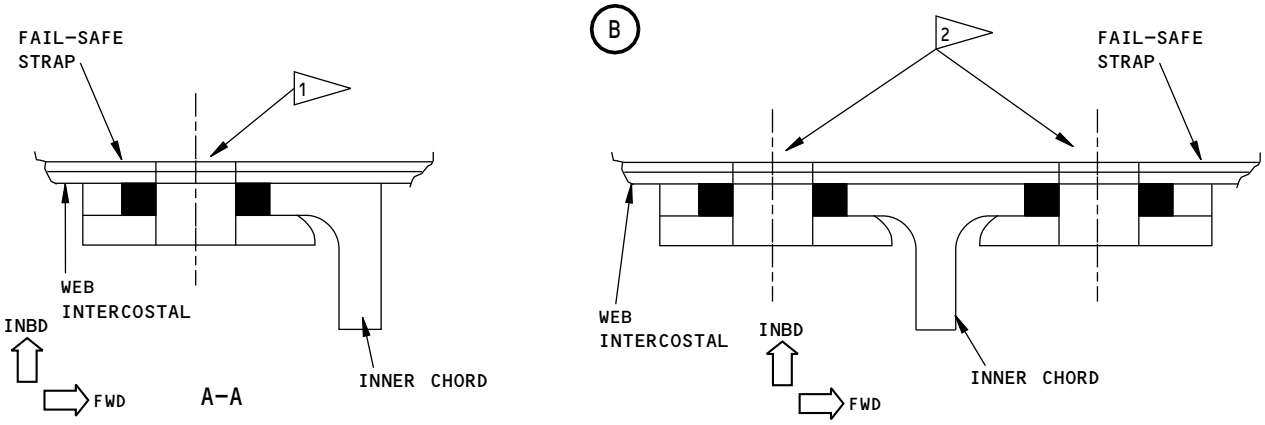

B-B
(TYPICAL)

NOTES:

CRACK DIRECTION

1 DRT CHECK FORM ITEM 53-30-08-5 INSPECTION AREA 2. THERE ARE TYPICALLY EIGHT HOLES TO EXAMINE THE INNER CHORD FOR CRACKS AT THE FORWARD EDGE FRAME OF THE FORWARD CARGO DOOR AT S-18R. SOME AIRPLANE MODELS CAN HAVE MORE OR LESS FASTENERS IN THE INSPECTION AREA. THE FASTENERS MUST BE REMOVED TO DO AN OPEN HOLE EDDY CURRENT INSPECTION.

2160539 S0000472363_V1

Inspection Location
Figure 1 (Sheet 2 of 2)

BOEING PROPRIETARY - Copyright © Unpublished Work - See title page for details

SURFACE INSPECTION OF THE INNER CHORDS OF THE FORWARD AND AFT FRAMES AT THE AFT CARGO DOOR SURROUND FROM S-17R TO S-19R (HFEC)

1. Purpose

A. Use this procedure to help find surface cracks in the inner chords of the forward and aft frames of the aft cargo door surround. The forward edge of the inner chord of the forward frame at STA 794 and the aft edge of the inner chord of the aft frame at STA 847 are examined vertically from S-17R to S-19R. The vertical scans will find cracks that are at the edge of the inner chords. See Figure 1 for the inspection areas.

B. Use an angled pencil probe to examine most of the inner chord edges from S-17R to S-19R. There is a small inspection area at the inner chord edges that is near the upper main sill where a flexible blade probe is necessary to do the probe scan. A mirror will help with this inspection area near the upper main sill. See Figure 1 for this inspection area.

C. 737 Maintenance Planning Document (MPD) Damage Tolerance Rating (D626A001-DTR) Reference:

(1) Item: 53-60-08-3

2. Equipment

A. General

(1) Use inspection equipment that can be calibrated on the reference standard as specified in Paragraph 4.

(2) Refer to Part 1, 51-01-00, for data about the equipment manufacturers.

B. Instrument

(1) Use an eddy current instrument that:

(a) Has an impedance plane display.

(b) Operates at a frequency range of 50 to 500 kHz.

(2) The instruments that follow were used to help prepare this procedure.

(a) Nortec 1000; Staveley (Olympus)

(b) Phasec 3D; General Electric

C. Probes

(1) A shielded, right-angle probe is necessary to use to do this inspection. The maximum probe width is 0.130 inch (3.30 mm).

(2) Refer to Part 6, 51-00-00, Procedure 23, paragraph 3.C, for data about probe selection.

(3) A flexible blade probe is necessary to use to examine the area at the edge of the inner chord that is at and immediately above the upper main sill. The maximum thickness of this probe is 0.070 inch (1.78 mm). The maximum width at the probe coil is 0.150 inch (3.80 mm). See View D in Figure 1 for this small inspection area.

(4) The probes that follow were used to help prepare this procedure.

(a) MTF902-50B; NDT Engineering (Olympus) – (angled pencil probe – an equivalent probe can be used)

(b) AF-5059: Aerofab NDT (flexible blade probe)

BOEING PROPRIETARY - Copyright © Unpublished Work - See title page for details

D. Reference Standard

(1) Use reference standard 126, or an equivalent, to help calibrate the instrument. Refer to Part 6, 51-00-00, Procedure 23, for data about reference standard 126.

E. Special Tools

(1) Use a mirror to help see the inspection area on the inner chord that is at and immediately above the web of the upper main sill. See Views C and D in Figure 1 to see the mirror locations.

3. Prepare for the Inspection

A. Identify the inspection areas shown in Figure 1.

B. Remove the reveal from the frames at stations 794 and 847 that is immediately below the upper main sill. See Figure 1.

C. Remove the insulation from the inner chords in the inspection area between stringers 17R and 19R at the aft and forward frames. See Figure 1.

D. Remove sealant from the forward edge of the inner chord at the STA 794 frame from stringer 17R to 19R. See Figure 1.

E. Remove sealant from the aft edge of the inner chord at the STA 847 frame from stringer 17R to 19R. See Figure 1.

F. Fully clean the inspection area along the edges of the inner chords and, if necessary, lightly sand the paint to make it smooth.

4. Instrument Calibration

A. Calibrate the equipment as specified in Part 6, 51-00-00, Procedure 23, paragraph 5. Use reference standard 126, or an equivalent, to help do the calibration. It will be necessary to do the calibration for each probe (the angled pencil probe and the blade probe).

5. Inspection Procedure

A. Examine the forward edge of the inner chord of the frame at STA 794 for cracks from stringer 17R to 19R as specified in Part 6, 51-00-00, Procedure 23, paragraph 6, and the steps that follow:

(1) See Figure 1 for the inspection area.

(2) Use an angled pencil probe to examine most of the inspection area where there is probe access above and below the main upper sill.

(a) Do the probe scans in a vertical direction.

(3) Use a flexible blade probe to examine the forward edge of the inner chord in the area that is adjacent to the upper main sill as shown in Figure 1. An angled pencil probe cannot be used in this area. Use a mirror to help see this small inspection area. Do the probe scans in a vertical direction.

B. Examine the aft edge of the inner chord of the frame at STA 847 for cracks from stringer 17R to 19R as specified in Part 6, 51-00-00, Procedure 23, paragraph 6, and the steps that follow:

(1) See Figure 1 for the inspection area.

(2) Use an angled pencil probe to examine most of the inspection area where there is probe access above and below the main upper sill.

(a) Do the probe scans in a vertical direction.

BOEING PROPRIETARY - Copyright © Unpublished Work - See title page for details

(3) Use a flexible blade probe to examine the aft edge of the inner chord in the area that is adjacent to the upper main sill as shown in Figure 1. An angled pencil probe cannot be used in this area. Use a mirror to help see this small inspection area. Do the probe scans in a vertical direction.

6. Inspection Results

A. Refer to Part 6, 51-00-00, Procedure 23, paragraph 7, for instructions to help make an analysis of the indications that occur during the inspection.

BOEING PROPRIETARY - Copyright © Unpublished Work - See title page for details

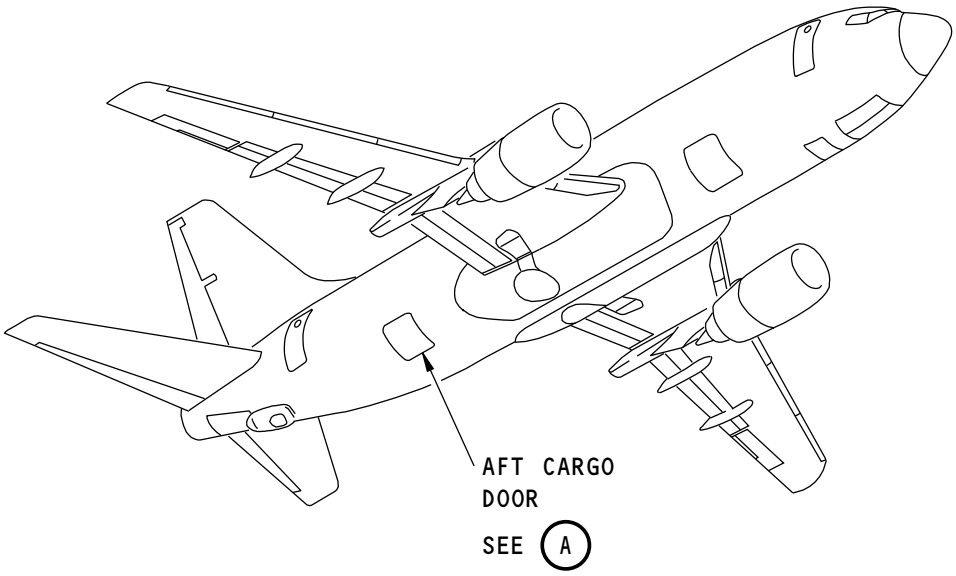

2160544 S0000472365_V2

Inspection Areas
Figure 1 (Sheet 1 of 5)

BOEING PROPRIETARY - Copyright © Unpublished Work - See title page for details

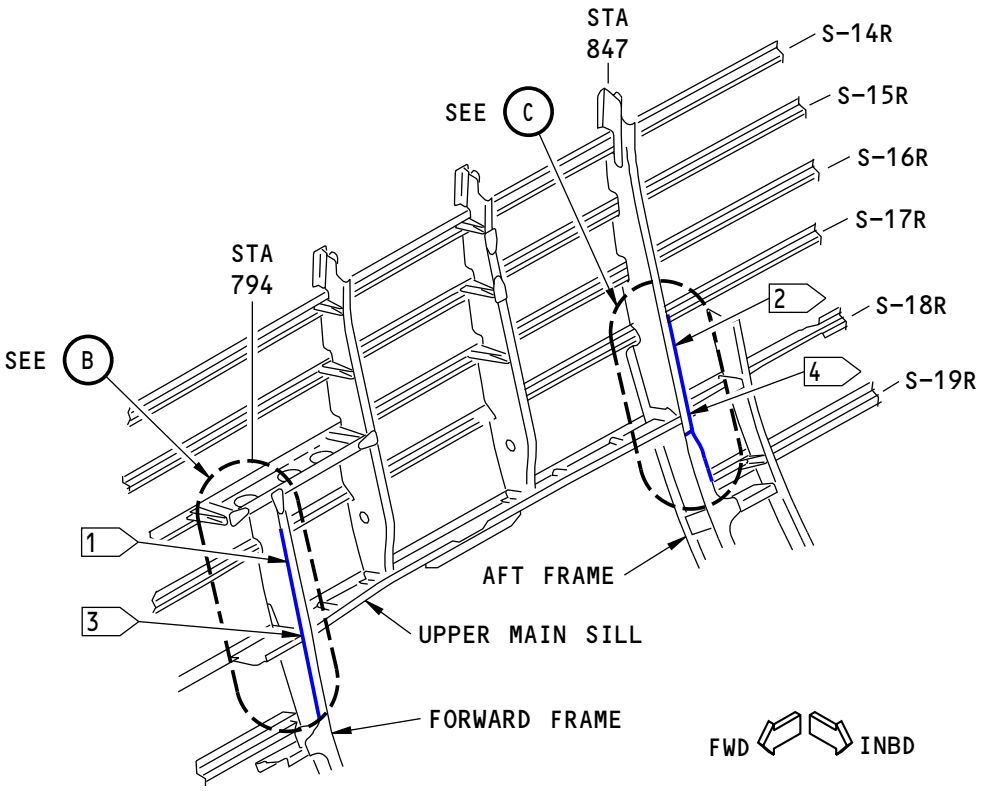

VIEW OF THE FORWARD AND AFT FRAMES OF THE AFT CARGO DOOR SURROUND AS YOU LOOK OUTBOARD

A

NOTES:

INSPECTION AREA

1 DO A VERTICAL PROBE SCAN ALONG THE FORWARD EDGE OF THE FORWARD FRAME FROM STRINGER 17R TO STRINGER 19R.

2 DO A VERTICAL PROBE SCAN ALONG THE AFT EDGE OF THE AFT FRAME FROM STRINGER 17R TO STRINGER 19R.

3 USE THE FLEXIBLE BLADE PROBE TO DO A SCAN OF THE FORWARD EDGE OF THE FORWARD FRAME IN THE AREA THAT IS IMMEDIATELY ADJACENT TO THE UPPER MAIN SILL. SEE FIGURE 1 (SHEET 5) FOR THIS SMALL INSPECTION AREA.

4 USE THE FLEXIBLE BLADE PROBE TO DO A SCAN OF THE AFT EDGE OF THE AFT FRAME IN THE AREA THAT IS IMMEDIATELY ADJACENT TO THE UPPER MAIN SILL. SEE FIGURE 1 (SHEET 5) FOR THIS SMALL INSPECTION AREA.

2160545 S0000472366_V2

Inspection Areas
Figure 1 (Sheet 2 of 5)

BOEING PROPRIETARY - Copyright © Unpublished Work - See title page for details

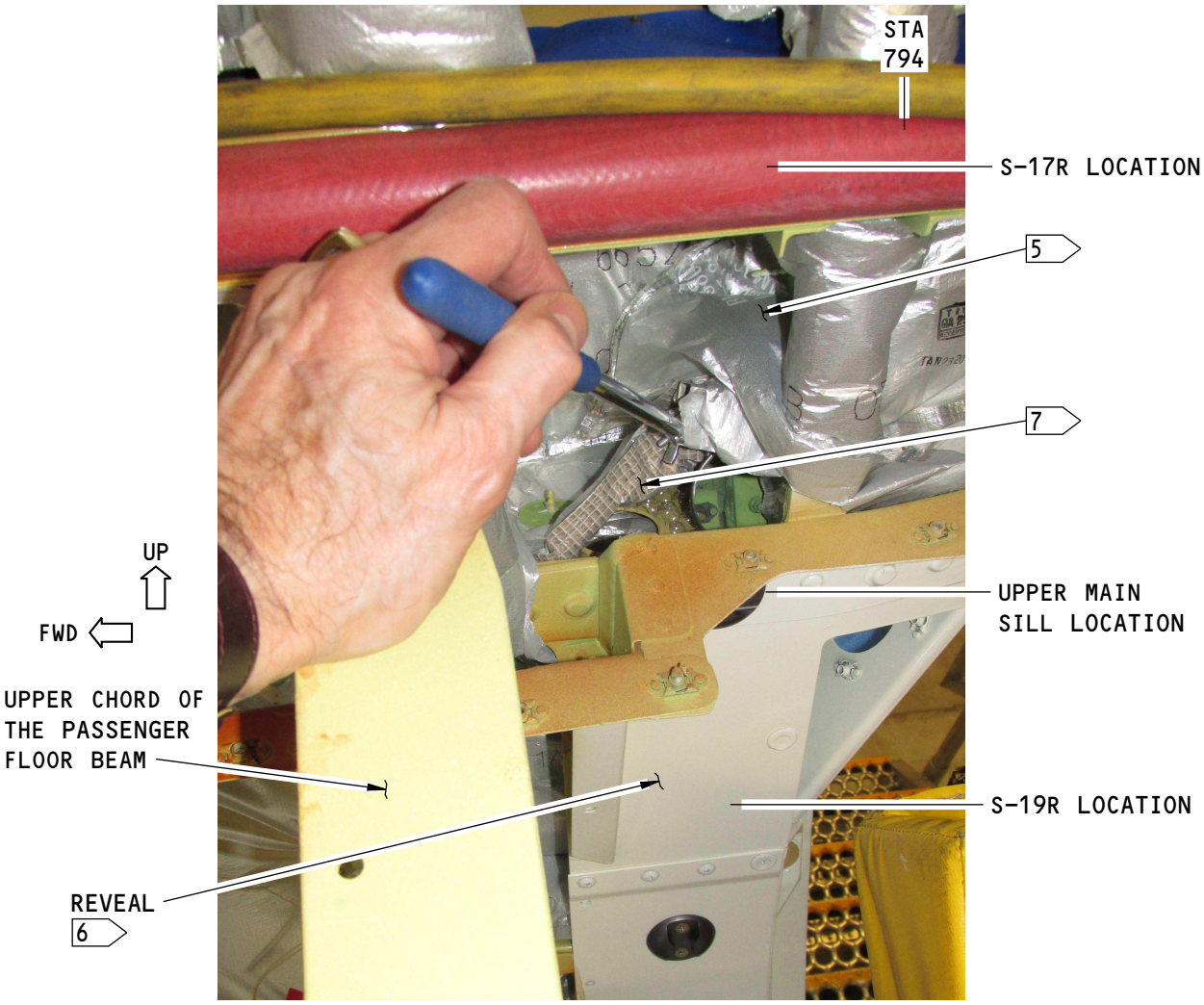

THIS IS A VIEW OF THE INNER CHORD OF THE FORWARD FRAME OF THE AFT CARGO DOOR SURROUND AT STA 794 AS YOU LOOK OUTBOARD.

B

NOTES:

5 REMOVE THE INSULATION FROM THE INNER CHORD OF THE FORWARD FRAME AT STA 794 TO SEE THE FORWARD EDGE OF THE INNER CHORD.

6 REMOVE THE REVEAL TO DO A VERTICAL PROBE SCAN ON THE FORWARD EDGE OF THE INNER CHORD OF THE FORWARD FRAME AT STA 794 FROM THE UPPER MAIN SILL DOWN TO STRINGER 19R.

7 SEE VIEW D AND FLAG NOTE 9 FOR A LARGER VIEW AND MORE INSTRUCTIONS FOR THIS INSPECTION AREA THAT IS VIEWED WITH A MIRROR.

2476837 S0000580685_V1

Inspection Areas
Figure 1 (Sheet 3 of 5)

BOEING PROPRIETARY - Copyright © Unpublished Work - See title page for details

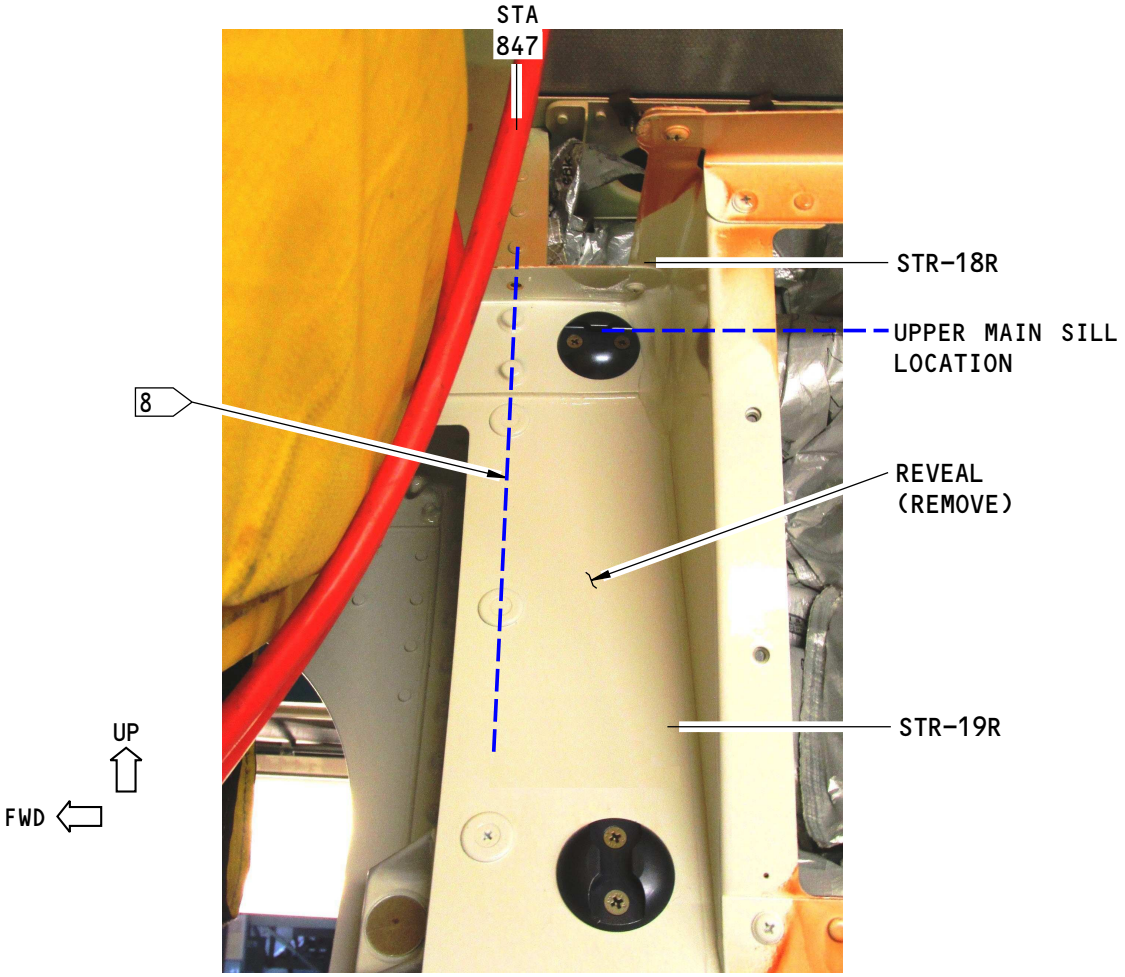

VIEW OF THE AFT FRAME OF THE AFT CARGO DOOR SURROUND AT STA 847 AS YOU LOOK OUTBOARD FROM THE CARGO BAY

C

NOTES:

- REMOVE THE INSULATION FROM THE INNER CHORD OF THE AFT FRAME AT STA 847 TO SEE THE AFT EDGE OF THE INNER CHORD.
- REMOVE THE REVEAL ON THE AFT FRAME AT STA 847 TO SEE THE INNER CHORD OF THE FRAME THAT IS BEHIND THE REVEAL.

8 LOCATION OF THE INNER CHORD OF THE AFT FRAME. DO A VERTICAL SCAN ON THE AFT EDGE OF THE INNER CHORD FROM THE UPPER MAIN SILL TO STRINGER 19R.

2476846 S0000580686_V1

Inspection Areas
Figure 1 (Sheet 4 of 5)

BOEING PROPRIETARY - Copyright © Unpublished Work - See title page for details

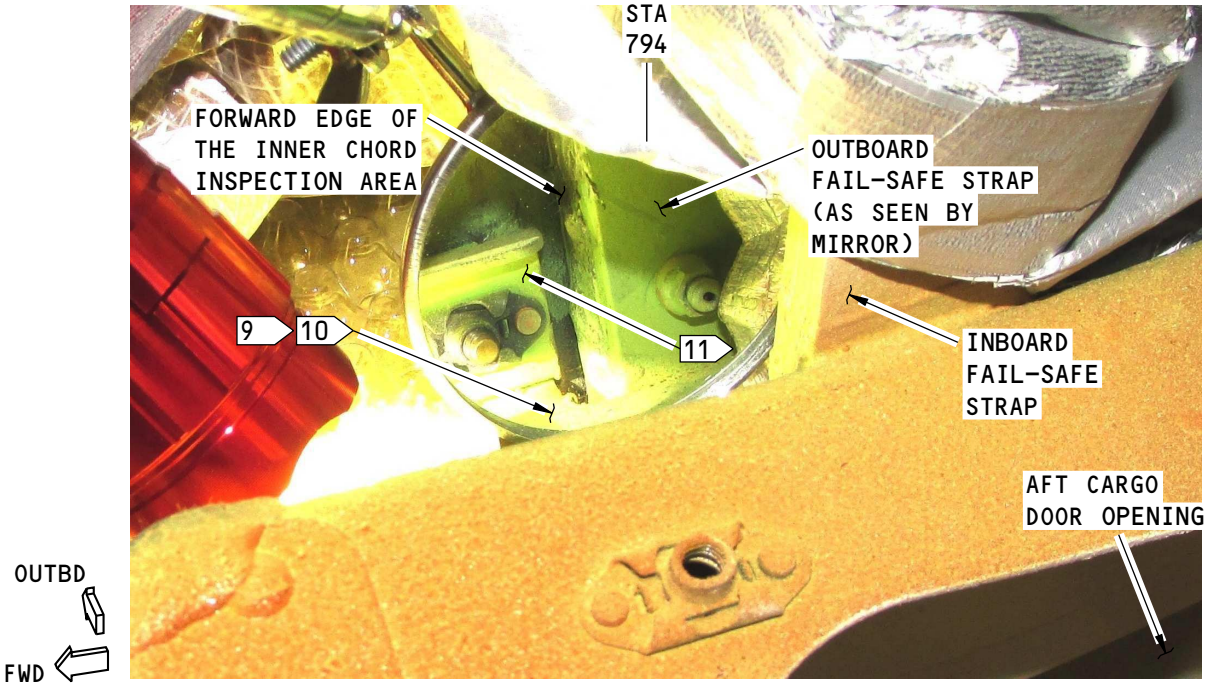

VIEW OF ONE OF THE INSPECTION AREAS ON THE INNER CHORD AT STA 794 AS YOU LOOK OUTBOARD FROM THE PASSENGER FLOOR

D

NOTES:

- DO A VERTICAL PROBE SCAN ALONG THE FORWARD EDGE OF THE INNER CHORD FROM THE HORIZONTAL WEB OF THE UPPER MAIN SILL, UP TO STRINGER 17 (THE STRINGER 17 LOCATION IS NOT SHOWN IN THIS PHOTO).
- THE INSPECTION AREA ALONG THE AFT EDGE OF THE INNER CHORD AT STA 847 IS OPPOSITE TO THE INSPECTION AREA AT STA 794. DO A VERTICAL PROBE SCAN ALONG THE AFT EDGE OF THE INNER CHORD AT STA 847 FROM THE HORIZONTAL WEB OF THE UPPER MAIN SILL UP TO STRINGER 17. FLAGNOTES 9 THRU 11 ALSO APPLY TO THE INNER CHORD AT STA 847.

9 THIS IS A VIEW OF THE INSPECTION AREA ON THE FORWARD EDGE OF THE INNER CHORD AS YOU LOOK THROUGH A MIRROR. REMOVE THE SEALANT FROM THE FORWARD EDGE OF THE INNER CHORD. DO A VERTICAL SCAN WITH A BLADE PROBE WHERE THERE IS NOT SUFFICIENT ACCESS FOR AN ANGLED PENCIL PROBE. THE BLADE PROBE WILL FIT IN THE SMALL AREA BETWEEN THE VERTICAL FLANGE OF THE UPPER MAIN SILL AND THE INNER CHORD. SEE FLAGNOTE 11.

10 LOCATION OF THE HORIZONTAL WEB OF THE UPPER MAIN SILL.

11 THIS IS THE VERTICAL FLANGE OF THE UPPER MAIN SILL.

2476950 S0000580687_V1

Inspection Areas
Figure 1 (Sheet 5 of 5)

BOEING PROPRIETARY - Copyright © Unpublished Work - See title page for details

PART 6 - EDDY CURRENT

INTERCOSTALS OF THE AFT CARGO DOOR

1. **Purpose**

   A. Use this procedure to help find surface cracks in the intercostals around the cutout of the aft cargo door. There are ten intercostals to examine. Each intercostal is adjacent to a door stop and a backup fitting and is examined at two fastener locations. See Figure 1 for the inspection locations.

   B. 737 Maintenance Planning Document (MPD) Damage Tolerance Record (DTR) Check Form Reference:

      (1) Item: 53-60-09-3

2. **Equipment**

   A. General

      (1) All eddy current instruments that have an impedance display are permitted for use if they can be calibrated on the reference standard as specified in Paragraph 4.

      (2) Refer to Part 1, 51-01-00, for data about the equipment manufacturers.

   B. Instrument

      (1) Use an eddy current instrument that:

         (a) Has an impedance plane display.

         (b) Operates at a frequency range of 50 to 500 kHz.

      (2) The instrument that follows was used to help prepare this procedure.

         (a) Nortec 500; Olympus NDT

   C. Probe

      (1) Use a straight or right-angle, shielded probe with a maximum diameter of 0.2 inch (5 mm). Refer to Part 6, 51-00-00, Procedure 23, paragraph 3.C for data about probe selection.

      (2) The probe that follows was used to help prepare this procedure.

         (a) MP-50; NDT Engineering Corp (Olympus)

   D. Reference Standards

      (1) Use reference standard 188A (or an equivalent) as given in Part 6, 51-00-00, Procedure 23, paragraph 3.D. Use the rivet side to calibrate the probe.

3. **Prepare for the Inspection**

   A. Get access to the inspection area shown in Figure 1.

   B. Remove loose paint, dirt and sealant from the surface of the inspection areas as necessary.

4. **Instrument Calibration**

   A. Calibrate the equipment as specified in the calibration instructions of Part 6, 51-00-00, Procedure 23, paragraph 5, and as follows:

      (1) Use reference standard 188A or an equivalent. Use the rivet side to calibrate the probe.

5. **Inspection Procedure**

   NOTE: This inspection is specified in DTR Check Form Item 53-60-09-3.

BOEING PROPRIETARY - Copyright © Unpublished Work - See title page for details

A. Calibrate the instrument as specified in Paragraph 4.

B. Examine the ten intercostals for cracks at the two fastener locations shown by flagnote 1 in Figure 1. Do the inspections as follows:

(1) Balance the probe before you make each scan.

(2) Make a 360 degree scan around each fastener as specified in Part 6, 51-00-00, Procedure 23, paragraph 6.

(3) Make sure to examine two fastener locations for each intercostal that is at each door stop and backup fitting location (see Figure 1, flagnote 1).

6. Inspection Results

A. See Part 6, 51-00-00, Procedure 23, paragraph 7, for instructions to help make an analysis of signals that occur during the inspection.

BOEING PROPRIETARY - Copyright © Unpublished Work - See title page for details

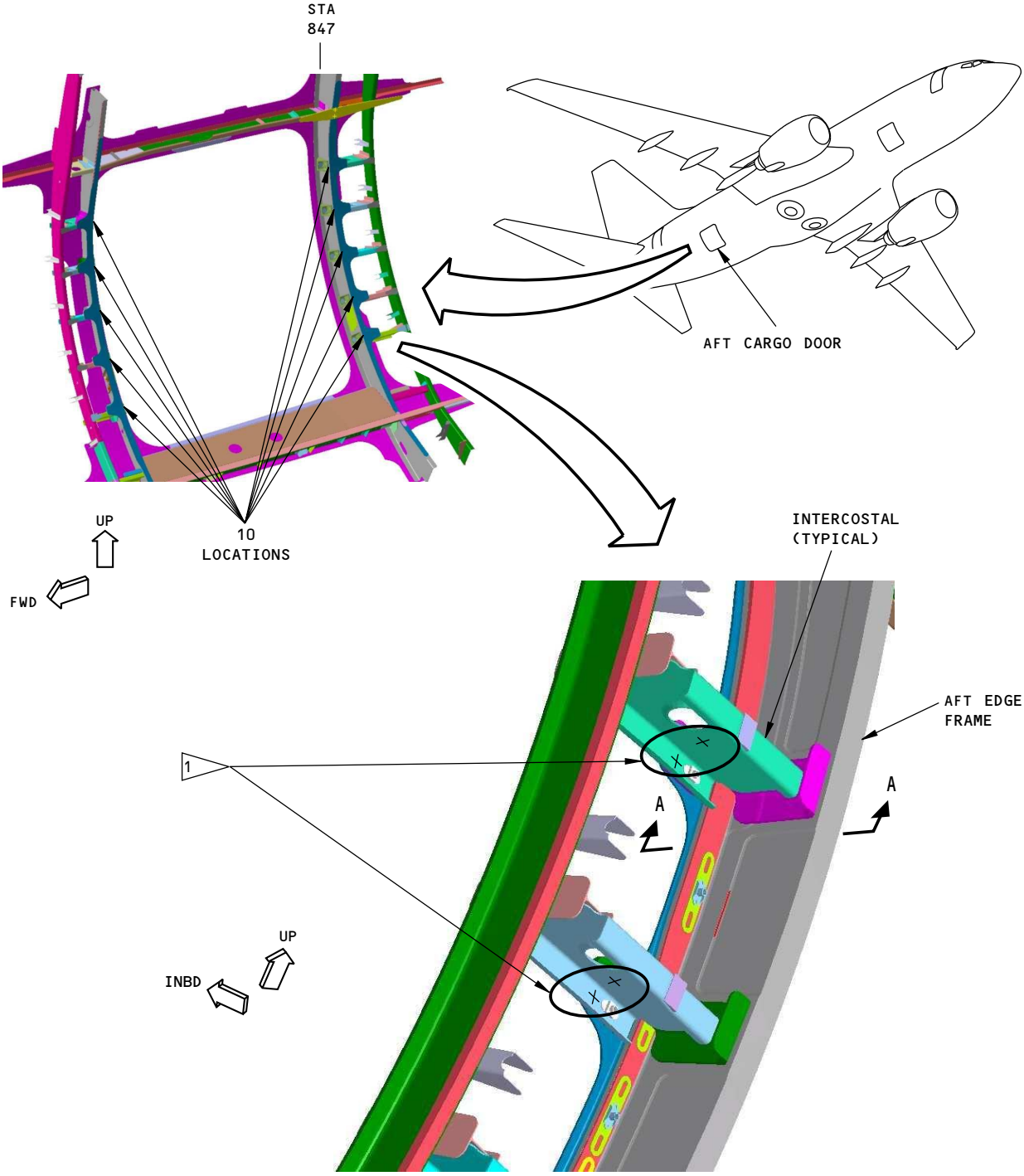

THE AFT INTERCOSTALS ARE SHOWN;
THE FORWARD INTERCOSTALS ARE OPPOSITE

2160566 S0000472371_V1

Inspection Areas
Figure 1 (Sheet 1 of 2)

BOEING PROPRIETARY - Copyright © Unpublished Work - See title page for details

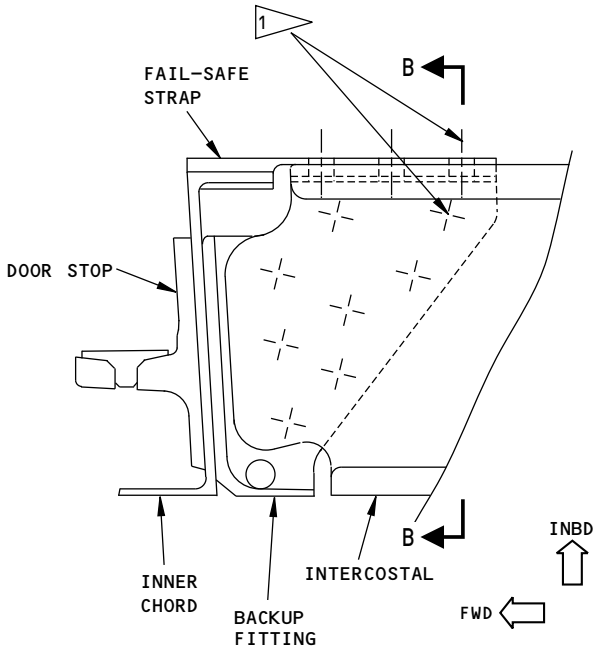

A-A

THE AFT INTERCOSTAL IS SHOWN;
THE FORWARD INTERCOSTAL IS OPPOSITE

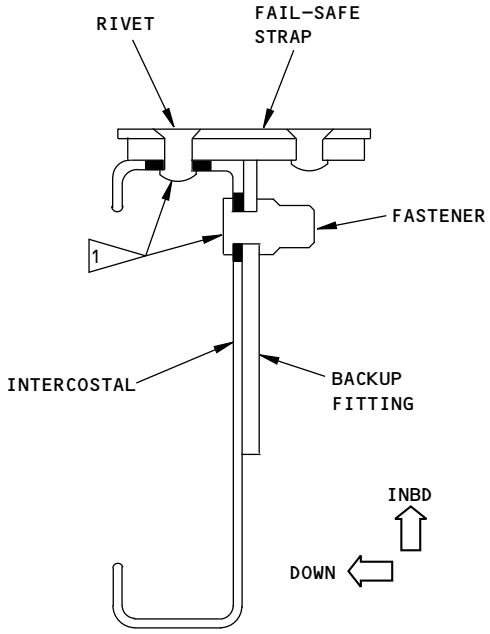

B-B

THE AFT INTERCOSTAL IS SHOWN;
THE FORWARD INTERCOSTAL IS OPPOSITE

NOTES:

■ INSPECTION LOCATIONS

- THERE ARE TEN INTERCOSTALS TO EXAMINE AT THE AFT CARGO DOOR. EACH INTERCOSTAL IS ADJACENT TO A DOOR STOP AND A BACK UP FITTING. EXAMINE THE INTERCOSTAL WEB FOR CRACKS AT THE RIVET AND FASTENER HOLES SHOWN. BALANCE THE PROBE BEFORE YOU DO A 360 DEGREE SCAN AT EACH FASTENER.

1 DTR CHECK FORM ITEM 53-60-09-3 INSPECTION AREA. THERE ARE 2 FASTENERS TO EXAMINE AT EACH INTERCOSTAL AS SHOWN

2160568 S0000472372_V1

Inspection Areas
Figure 1 (Sheet 2 of 2)

BOEING PROPRIETARY - Copyright © Unpublished Work - See title page for details

STRAPS AT THE FORWARD FRAME OF THE AFT GALLEY DOOR OPENING AT DOOR STOPS 1, 2, 5 AND 6 (HFEC AND LFEC)

1. Purpose

A. Use this procedure to examine the straps at the forward frame of the aft galley door opening. The straps to be examined are adjacent to door stops 1, 2, 5 and 6 at station 951. The straps are aluminum. See Figure 1 for the inspection locations.

B. Use a surface probe to make a scan around 4 fasteners at each of the inspection locations at door stops 1, 2 and 6. At the door stop 5 location, a surface probe scan is done along with a subsurface eddy current inspection on the bracket. See Figure 1 for these inspection areas.

C. Use an impedance plane display instrument, an angled pencil probe and a subsurface spot probe to do this procedure.

D. 737 Maintenance Planning Document (MPD) Damage Tolerance Record (DTR) Check Form Reference:

(1) Item: 53-70-08-3

2. Equipment

A. General

(1) Refer to Part 1, 51-01-00, for data about the equipment manufacturers.

B. Instruments

(1) Refer to Part 6, 51-00-00, Procedure 23 and Part 6, 53-30-00, Procedure 5 for instrument data and instruments that were used to help prepare this procedure.

C. Probes

(1) For the surface inspection, refer to Part 6, 51-00-00, Procedure 23, for probe data.

(2) Use an angled pencil probe that:

(a) Can be calibrated as specified in Paragraph 4.

(b) Has a maximum diameter of 0.13 inch (3.3 mm) at the probe coil.

(c) Has a minimum probe drop of 0.20 inch (5.0 mm).

(d) Is shielded.

(3) The surface probes that follow were used to help prepare this procedure.

(a) TPEN925-5B; Techna NDT LLC

(b) MTF902-50B; Olympus NDT

(4) For the subsurface inspection, refer to Part 6, 53-30-00, Procedure 5, for probe data. Use a shielded spot probe that:

(a) Can be calibrated as specified in Part 6, 53-30-00, Procedure 5, paragraph 5.

(b) Has a maximum diameter of 0.31 inch (7.9 mm).

(5) The subsurface probe that follows was used to help prepare this procedure.

(a) SPO5327; Olympus NDT

D. Reference Standard

BOEING PROPRIETARY - Copyright © Unpublished Work - See title page for details

(1) For the surface inspection, use reference standard 188A to calibrate the instrument. Refer to Part 6, 51-00-00, Procedure 23, for data about reference standard 188A.

(2) For the subsurface inspection, use reference standard ANDT1052 to calibrate the instrument. Refer to Part 6, 53-30-00, Procedure 5, for data about reference standard ANDT1052. It is permitted to use NDT1052 for the calibration if you don't have reference standard ANDT1052.

3. Prepare for the Inspection

A. Remove the internal panels and insulation from the inspection areas immediately forward of the aft galley door opening. See Figure 1.

B. Remove loose paint, dirt or sealant from the scan areas on the straps shown in Figure 1. For the subsurface inspection, remove loose paint, dirt or sealant from the scan areas on the bracket that is forward of door stop 5. See Figure 1 for these scan areas.

4. Instrument Calibration

A. Refer to Part 6, 51-00-00, Procedure 23, for the calibration instructions for the surface inspection.

(1) Use reference standard 188A for the calibration. Do the calibration around the protruding head rivet on reference standard 188A.

B. Refer to Part 6, 53-30-00, Procedure 5, for the calibration instructions for the subsurface inspection on the bracket near door stop 5. Use reference standard ANDT1052 for the calibration. It is permitted to use reference standard NDT1052 for the calibration if you don't have reference standard ANDT1052.

5. Inspection Procedure

A. Surface Inspection

(1) Refer to Part 6, 51-00-00, Procedure 23, paragraph 6, for general data on surface eddy current inspection procedures.

(2) Do a circular probe scan around the fastener heads on the straps at door stops 1, 2, and 6. See Figure 1, flagnote 3.

(3) Do a scan on the strap around the bracket at door stop 5. See Figure 1, flagnote 2 and View B for this scan area.

(4) Do a circular scan around the two fastener heads on the strap at door stop 5 that are behind the bracket. See Figure 1, Views B and C, for this scan area.

B. Subsurface Inspection

(1) Refer to Part 6, 53-30-00, Procedure 5, paragraph 6, for general data on the subsurface inspection.

(2) Put the spot probe immediately below (and aft of) the upper fastener on the bracket at door stop 5. See Figure 1, View B, for this spot probe location.

(3) Balance the instrument.

(4) Do a probe scan in a forward direction around the fastener as shown in Figure 1, View B. Stop the probe scan when you start to see an edge effect signal from the bracket edge.

(5) Put the spot probe immediately above (and aft of) the lower fastener on the bracket at door stop 5. See Figure 1, View B, for this spot probe location.

(6) Balance the instrument.

BOEING PROPRIETARY - Copyright © Unpublished Work - See title page for details

(7) Do a probe scan in a forward direction around the fastener as shown in Figure 1, View B. Stop the probe scan when you start to see an edge effect signal from the bracket edge.

NOTE: Do not do a probe scan on the forward or aft sides of the fasteners. Do not do a probe scan on the bracket above the top fastener. Do not do a probe scan on the bracket below the lower fastener. There is not sufficient clearance to do a probe scan at these locations.

6. Inspection Results

A. Inspection Results for the Surface Inspection

(1) Refer to Part 6, 51-00-00, Procedure 23, paragraph 7, for instructions to help make an analysis of possible crack indications.

B. Inspection Results for the Subsurface Inspection

(1) Refer to Part 6, 53-30-00, Procedure 5, paragraph 7, for instructions to help make an analysis of possible crack indications.

BOEING PROPRIETARY - Copyright © Unpublished Work - See title page for details

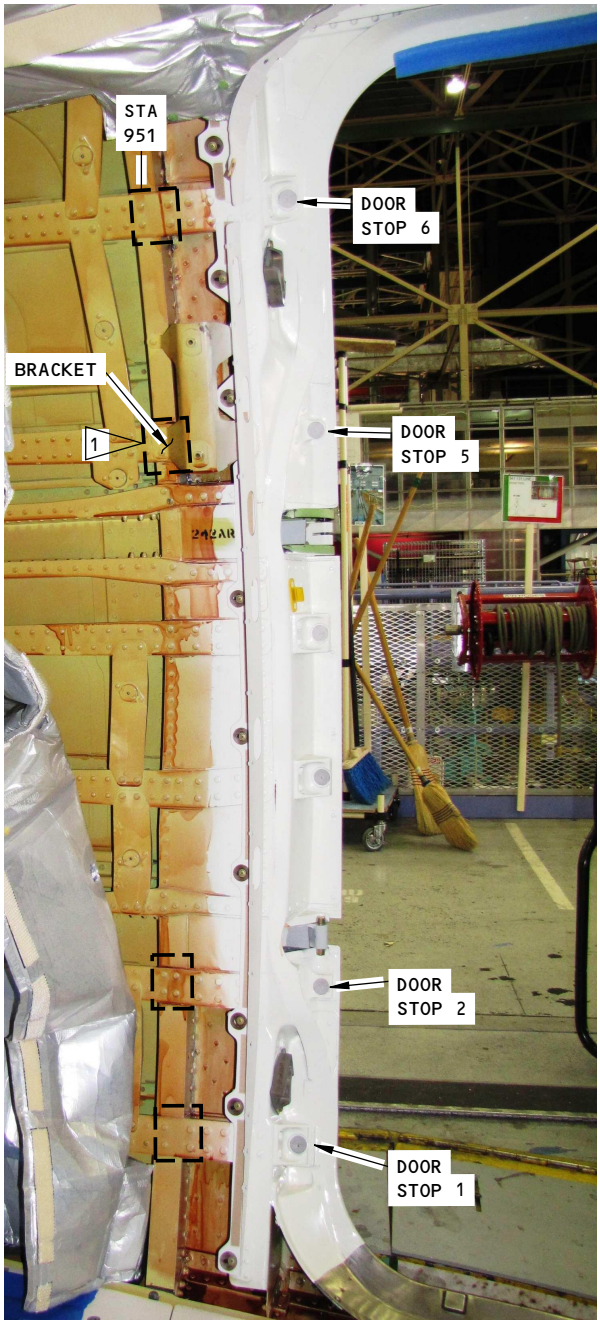

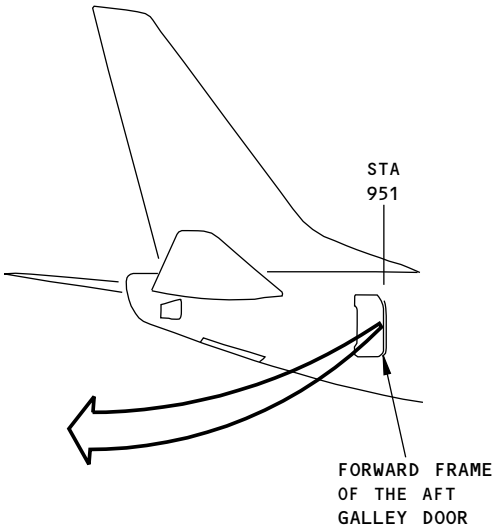

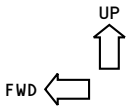

NOTES:

INSPECTION LOCATIONS ON THE STRAPS AT DOOR STOP LOCATIONS 1, 2, 5 AND 6 AT STATION 951.

- THERE ARE 4 INSPECTION LOCATIONS ON THE STRAPS AT STATION 951. EACH INSPECTION LOCATION HAS 4 FASTENERS TO EXAMINE.

1 SEE VIEWS A, B AND C FOR LARGER VIEWS OF THIS INSPECTION LOCATION ON THE STRAP AT DOOR STOP 5.

VIEW OF THE FORWARD FRAME OF THE AFT GALLEY DOOR OPENING AS YOU LOOK OUTBOARD

2160569 S0000472374_V1

Inspection Areas
Figure 1 (Sheet 1 of 4)

BOEING PROPRIETARY - Copyright © Unpublished Work - See title page for details

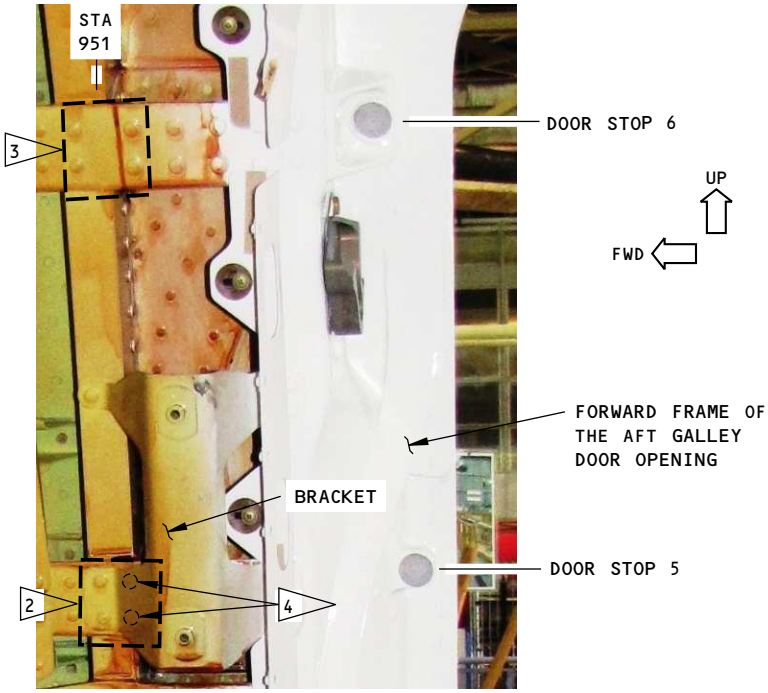

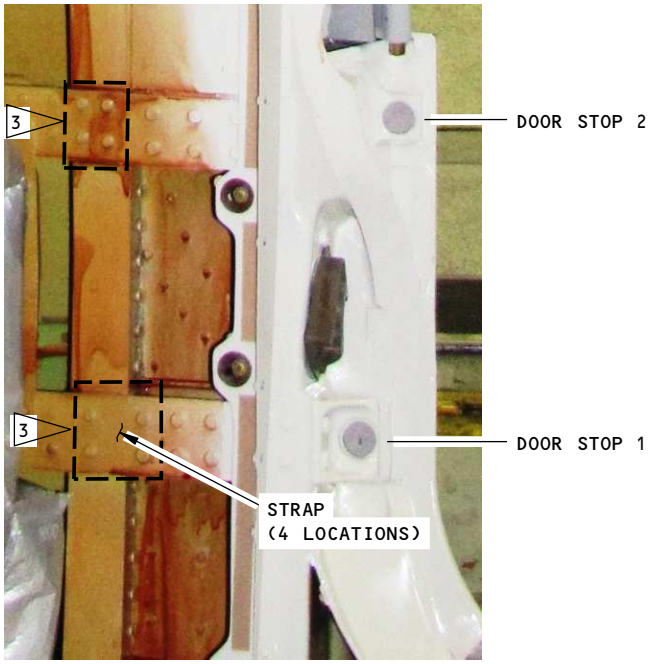

NOTES:

- DOOR STOPS 3 AND 4 ARE NOT SHOWN AND ARE NOT INCLUDED IN THIS INSPECTION.

2 SEE VIEWS B AND C FOR LARGER VIEWS OF THIS INSPECTION LOCATION AND FOR MORE INSTRUCTIONS.

3 DO A 360 DEGREE PROBE SCAN ON THE STRAPS AROUND THESE 4 FASTENERS AT THESE INSPECTION LOCATIONS.

4 THESE TWO FASTENERS ARE BEHIND THE BRACKET. TO SEE THESE FASTENERS TO DO A SURFACE SCAN, SEE VIEW C.

A

2160571 S0000472375_V1

Inspection Areas
Figure 1 (Sheet 2 of 4)

BOEING PROPRIETARY - Copyright © Unpublished Work - See title page for details

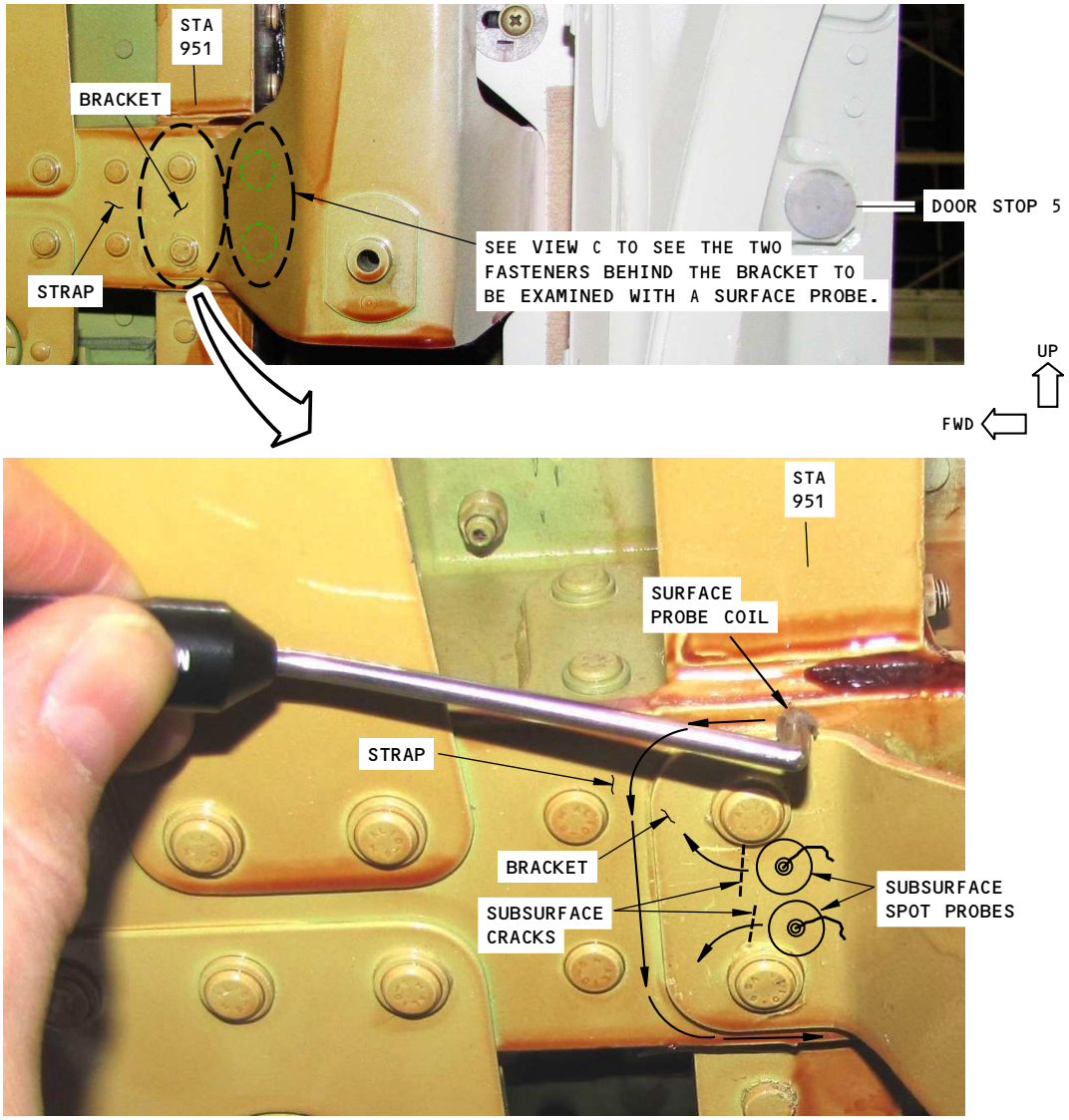

NOTES:

- FOR THE SURFACE INSPECTION: PUT THE SURFACE PROBE ON THE STRAP AS SHOWN ABOVE AND DO A PROBE SCAN ALONG THE EDGE OF THE BRACKET AS SHOWN BY THE SCAN ARROWS.
- FOR THE SUBSURFACE INSPECTION: PUT THE SUBSURFACE SPOT PROBE ON THE BRACKET AS SHOWN ABOVE AND DO A PROBE SCAN ALONG THE LOWER EDGE OF THE UPPER FASTENER AND ALONG THE UPPER EDGE OF THE LOWER FASTENER. REFER TO PART 6, 53-30-00, PROCEDURE 5, FOR THIS INSPECTION. USE REFERENCE STANDARD ANDT1052.

INSPECTION LOCATIONS ON THE STRAP AND BRACKET AT THE FORWARD FRAME OF THE AFT GALLEY DOOR OPENING (NEAR DOOR STOP 5)

B

2160573 S0000472376_V2

Inspection Areas
Figure 1 (Sheet 3 of 4)

BOEING PROPRIETARY - Copyright © Unpublished Work - See title page for details

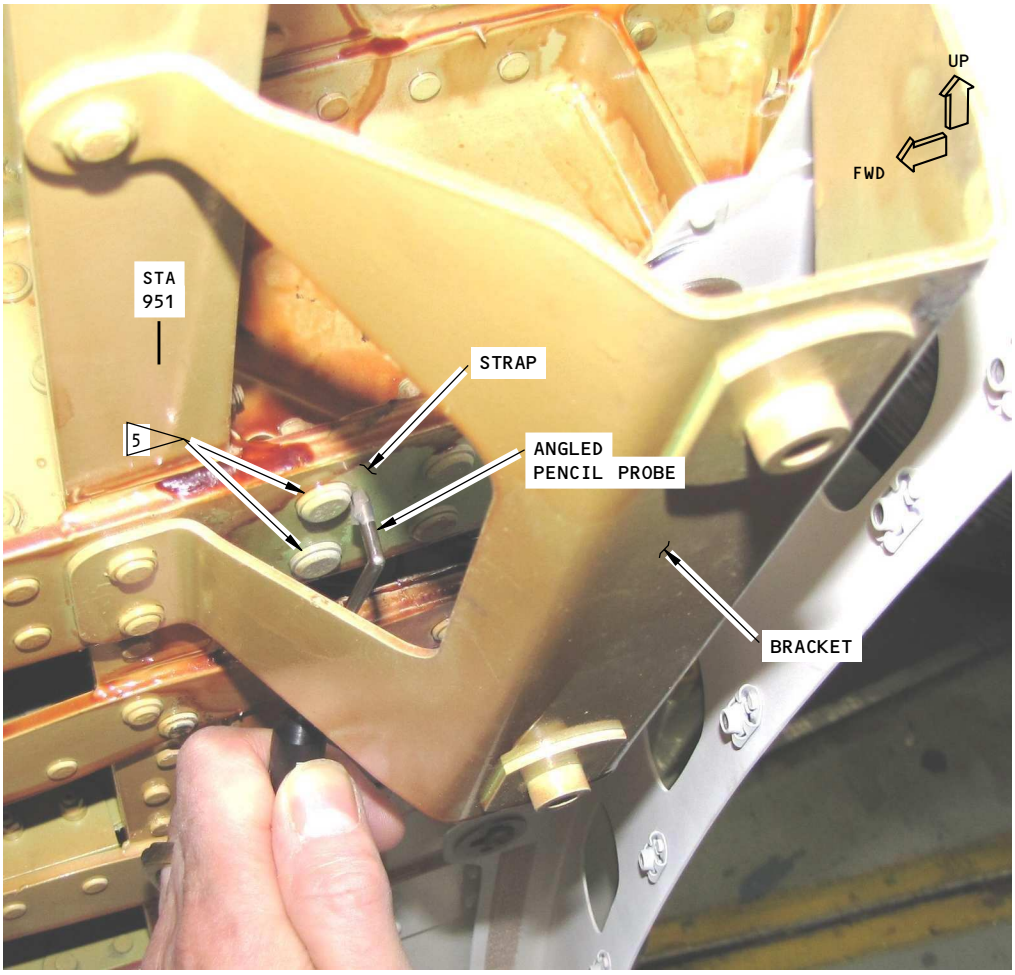

THIS IS A VIEW OF THE TWO FASTENERS ON THE STRAP
NEAR DOOR STOP 5 THAT ARE BEHIND THE BRACKET.

THIS VIEW IS AS YOU LOOK DOWN
AND BEHIND THE BRACKET

C

5 DO CIRCULAR PROBE SCANS WITH A SURFACE PROBE
AROUND THE TWO FASTENERS SHOWN HERE.

2160574 S0000472377_V1

Inspection Areas
Figure 1 (Sheet 4 of 4)

BOEING PROPRIETARY - Copyright © Unpublished Work - See title page for details

INTERCOSTALS AT THE AFT FRAME OF THE AFT GALLEY DOOR OPENING AT DOOR STOPS 1, 2, 5 AND 6 (HFEC)

1. Purpose

A. Use this procedure to examine the intercostals at the aft frame of the aft galley door opening. The intercostals to be examined are aft of door stops 1, 2, 5 and 6 at station 992. The intercostals are aluminum. See Figure 1 for the inspection locations.

B. Use a pencil probe to make a scan around 2 fasteners at each of the inspection locations on the intercostals at door stops 1, 2, 5 and 6. There is a total of 8 fasteners to examine.

C. Use an impedance plane display instrument and a pencil probe to do this procedure.

D. 737 Maintenance Planning Document (MPD) Damage Tolerance Record (DTR) Check Form Reference:

(1) Item: 53-70-08-4

2. Equipment

A. General

(1) Refer to Part 1, 51-01-00, for data about the equipment manufacturers.

B. Instruments

(1) Refer to Part 6, 51-00-00, Procedure 23, for instrument data and instruments that were used to help prepare this procedure.

C. Probes

(1) Refer to Part 6, 51-00-00, Procedure 23, for probe data.

(2) Use a pencil probe that:

(a) Can be calibrated as specified in Paragraph 4.

(b) Is straight or angled.

(c) Has a maximum diameter of 0.13 inch (3.3 mm) at the probe coil.

(d) Is shielded.

(3) The pencil probes that follow were used to help prepare this procedure.

(a) TPEN925-5B; Techna NDT LLC

(b) MTF902-50B; Olympus NDT

D. Reference Standard

(1) Use reference standard 188A to calibrate the instrument. Refer to Part 6, 51-00-00, Procedure 23, for data about reference standard 188A.

E. Special Tools

(1) Use a mirror to help see the inspection area on the lower surface of the intercostal at door stop 1.

3. Prepare for the Inspection

A. Remove the internal panels and insulation from the inspection areas immediately aft of the aft frame of the aft galley door opening (immediately aft of station 992). See Figure 1.

BOEING PROPRIETARY - Copyright © Unpublished Work - See title page for details

B. Get access to the inspection areas on the intercostals at door stops 1, 5 and 6 from the lower surface of the intercostals. Get access to the inspection area on the intercostal at door stop 2 from the top surface of the intercostal. See Figure 1 for the rivets to examine.

C. Remove loose paint, dirt, corrosion inhibiting compound (CIC) or sealant from the scan areas on the web of the intercostals shown in Figure 1.

4. Instrument Calibration

A. Refer to Part 6, 51-00-00, Procedure 23, for the calibration instructions for the surface inspection.

(1) Use reference standard 188A for the calibration. Do the calibration around the protruding head rivet on reference standard 188A.

5. Inspection Procedure

A. Refer to Part 6, 51-00-00, Procedure 23, paragraph 6, for general data on surface eddy current inspection procedures.

NOTE: Get access to the inspection areas on the intercostals at door stops 1, 5 and 6 from the lower surface of the intercostals. Get access to the inspection area on the intercostal at door stop 2 from the top surface of the intercostal.

B. Do a circular probe scan around the rivet heads on the intercostals immediately aft of station 992. See Figure 1 for the fasteners to examine and for data on which surface to examine. At each door stop inspection location, there are two rivets to examine. There is a total of 8 rivets to examine. All fasteners to be examined are near the inboard edge of the intercostals.

6. Inspection Results

A. Refer to Part 6, 51-00-00, Procedure 23, paragraph 7, for instructions to help make an analysis of possible crack indications.

BOEING PROPRIETARY - Copyright © Unpublished Work - See title page for details

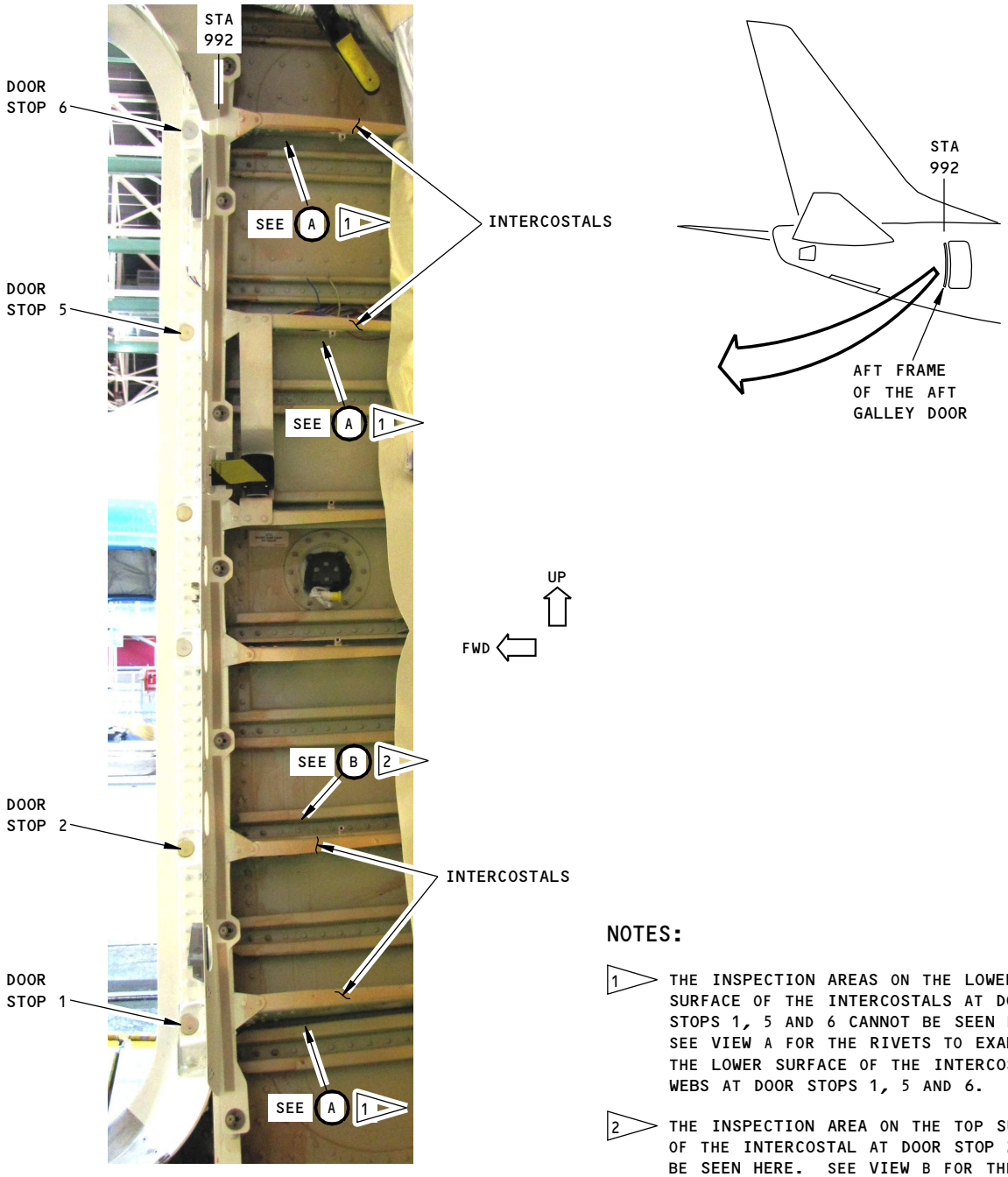

NOTES:

1. THE INSPECTION AREAS ON THE LOWER SURFACE OF THE INTERCOSTALS AT DOOR STOPS 1, 5 AND 6 CANNOT BE SEEN HERE. SEE VIEW A FOR THE RIVETS TO EXAMINE ON THE LOWER SURFACE OF THE INTERCOSTAL WEBS AT DOOR STOPS 1, 5 AND 6.

2. THE INSPECTION AREA ON THE TOP SURFACE OF THE INTERCOSTAL AT DOOR STOP 2 CANNOT BE SEEN HERE. SEE VIEW B FOR THE RIVETS TO EXAMINE ON THE TOP SURFACE OF THE INTERCOSTAL WEB AT DOOR STOP 2.

VIEW OF THE AFT FRAME OF THE AFT GALLEY DOOR OPENING AT STATION 992 AS YOU LOOK OUTBOARD

2160578 S0000472380_V1

Inspection Areas
Figure 1 (Sheet 1 of 3)

BOEING PROPRIETARY - Copyright © Unpublished Work - See title page for details

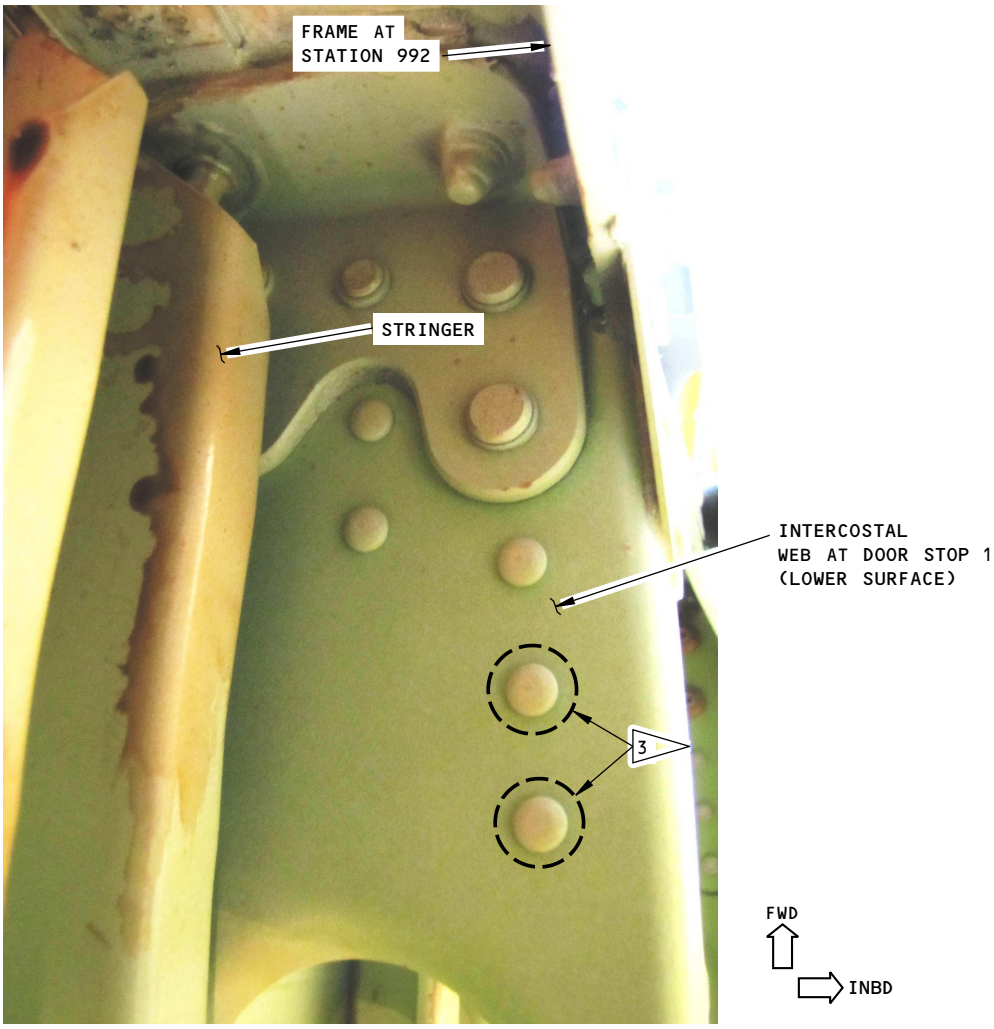

THIS IS A VIEW OF THE LOWER SURFACE OF THE INTERCOSTAL AT DOOR STOP 1. THIS VIEW IS AS YOU LOOK UP FROM BELOW THE INTERCOSTAL. USE A MIRROR TO SEE THIS INSPECTION AREA.

A

NOTES:

- THE VIEWS OF THE LOWER SURFACE OF THE INTERCOSTAL AND INSPECTION AREA AT DOOR STOPS 5 AND 6 (NOT SHOWN) ARE EQUIVALENT.

3 PUT THE PROBE ON THIS LOWER SURFACE OF THE INTERCOSTAL WEB AT DOOR STOP 1 AND DO A CIRCULAR PROBE SCAN AROUND THE TWO RIVETS SHOWN. ALSO DO CIRCULAR SCANS AROUND THESE RIVET LOCATIONS ON THE LOWER SURFACE OF THE INTERCOSTALS AT DOOR STOPS 5 AND 6.

2160580 S0000472381_V1

Inspection Areas
Figure 1 (Sheet 2 of 3)

BOEING PROPRIETARY - Copyright © Unpublished Work - See title page for details

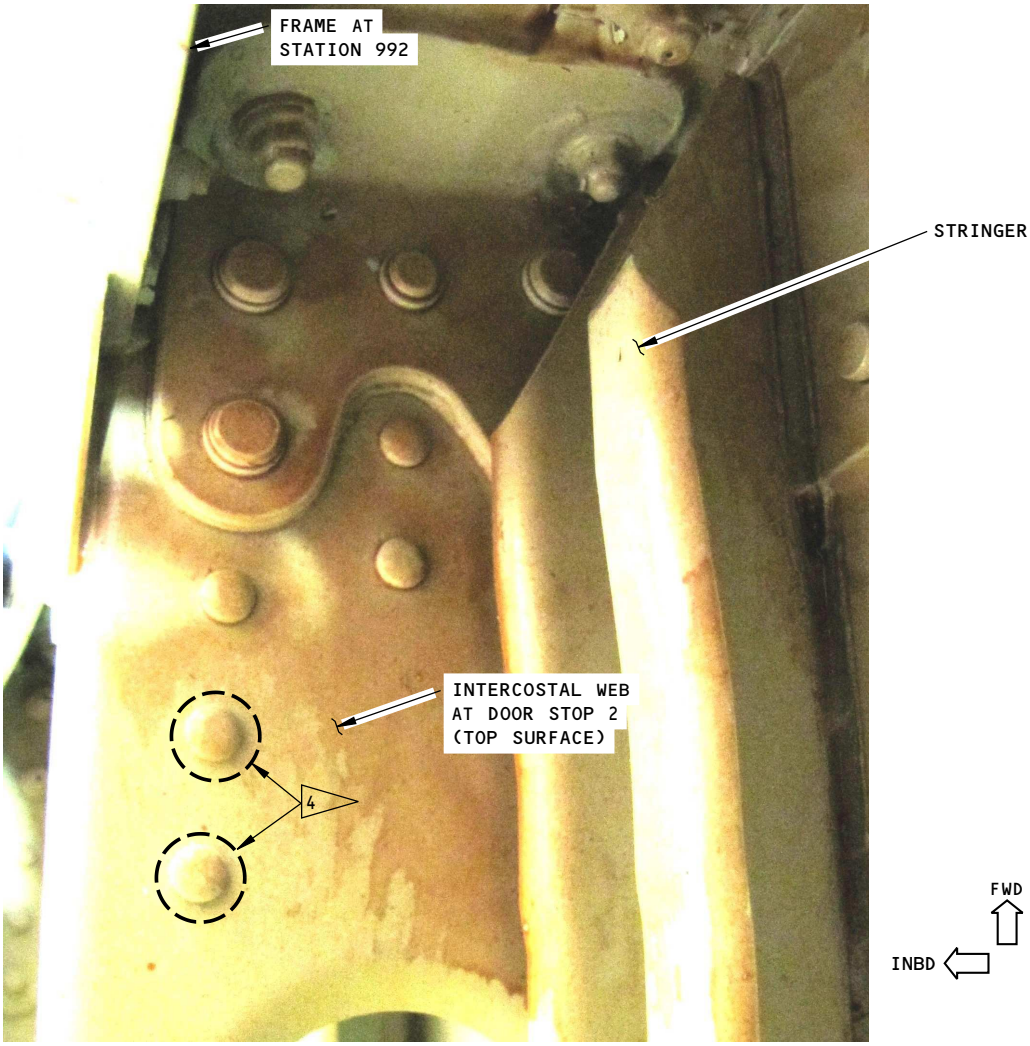

THIS IS A VIEW OF THE TOP SURFACE OF THE INTERCOSTAL
AT DOOR STOP 2 AS YOU LOOK DOWN

B

NOTES:

4 PUT THE PROBE ON THIS TOP SURFACE OF THE INTERCOSTAL WEB AT DOOR STOP 2 AND DO A CIRCULAR PROBE SCAN AROUND THE TWO RIVETS SHOWN.

2160581 S0000472382_V1

Inspection Areas
Figure 1 (Sheet 3 of 3)

BOEING PROPRIETARY - Copyright © Unpublished Work - See title page for details

PART 6 - EDDY CURRENT

OUTER CHORD AND WEB AT BULKHEAD STA 1156 AT THE PIVOT FITTING ATTACHMENTS

1. Purpose

A. Use this procedure to examine the aluminum outer chord and web on the aft side of the bulkhead at station 1156. See Figure 1 for the inspection locations on the left and right sides of the bulkhead at station 1156.

B. The probe scans are done in a vertical direction on the edge of the outer chord and on the web. The inspection areas are at LBL 18.75 and RBL 18.75 at WL 272.

C. Use an impedance plane display instrument and an angled pencil probe with a maximum probe tip diameter of 0.075 inch (1.9 mm).

D. 737 Damage Tolerance Rating (D626A001-DTR) Reference:

(1) Item: 53-80-07-1

2. Equipment

A. General

(1) Refer to Part 1, 51-01-00, for data about the equipment manufacturers.

B. Instruments

(1) Refer to Part 6, 51-00-00, Procedure 23, for instrument data and the instruments that were used to help prepare this procedure.

C. Probes

(1) Refer to Part 6, 51-00-00, Procedure 23, for probe data.

(2) Use an angled pencil probe that:

(a) Has a maximum probe diameter of 0.075 inch (1.9 mm).

(b) Has a maximum probe drop of 0.50 inch (13 mm).

(c) Has a maximum shaft length of 6.0 inches (152 mm).

(d) Can operate between 200 and 300 kHz.

(e) Is shielded.

(3) The angled probes that follow were used to help prepare this procedure.

(a) TSPEN95-6; Techna NDT

(b) MMTF903-40B20; Olympus NDT

D. Reference Standard

(1) Refer to Part 6, 51-00-00, Procedure 23, for data about reference standards 126 and 189.

3. Prepare for the Inspection

A. Remove the tail cone access panel on the right side of the tail cone. See Figure 1 that shows the access panel removed.

B. Get access to the inspection areas on the aft side of the bulkhead at station 1156. See Figure 1 for the inspection areas at LBL 18.75 and RBL 18.75 at WL 272.

C. Remove dirt, loose paint or sealant from the scan areas on the edge of the outer chord and the web. See Figure 1 for the inspection areas.

BOEING PROPRIETARY - Copyright © Unpublished Work - See title page for details

4. **Instrument Calibration**

A. Calibrate the instrument as specified in Part 6, 51-00-00, Procedure 23.

(1) For the edge of the outer chord inspection: Do the calibration on reference standard 189. Do the calibration on the notch that is in the 0.075 inch (2.0 mm) to 0.085 inch (2.2 mm) thick plate.

(2) For the web inspection: Do the calibration on reference standard 126.

5. **Inspection Procedure**

A. Examine the edge of the outer chord for cracks as follows:

(1) Refer to Part 6, 51-00-00, Procedure 23, paragraph 6, for general data on surface eddy current inspection procedures.

(2) Put the probe coil on the inboard edge of the outer chord at RBL 18.75 in the inspection area at WL 272. Make sure the side of the probe is against the web. See Figure 1 for the probe scan area on the edge of the outer chord.

(3) Use the web as a probe guide and do a probe scan on the edge of the outer chord in a vertical direction in the inspection area. See Figure 1.

(4) Do Paragraph 5.A.(1) thru Paragraph 5.A.(3) on the inboard edge of the outer chord on the left side of the airplane at LBL 18.75. See Figure 1 for this inspection area.

B. Examine the web for cracks as follows:

(1) Refer to Part 6, 51-00-00, Procedure 23, paragraph 6, for general data on surface eddy current inspection procedures.

(2) Put the probe coil on the web in the inspection area at RBL 18.75. Make sure the side of the probe is against the edge of the fail-safe strap. See Figure 1 for the probe scan area on the web.

(3) Use the fail-safe strap as a probe guide and do a probe scan on the web in a vertical direction in the inspection area. See Figure 1.

(4) Do Paragraph 5.B.(1) thru Paragraph 5.B.(3) on the web on the left side of the airplane at LBL 18.75. See Figure 1 for this inspection area.

6. **Inspection Results**

A. Refer to Part 6, 51-00-00, Procedure 23, paragraph 7, for instructions to help make an analysis of possible crack indications.

BOEING PROPRIETARY - Copyright © Unpublished Work - See title page for details

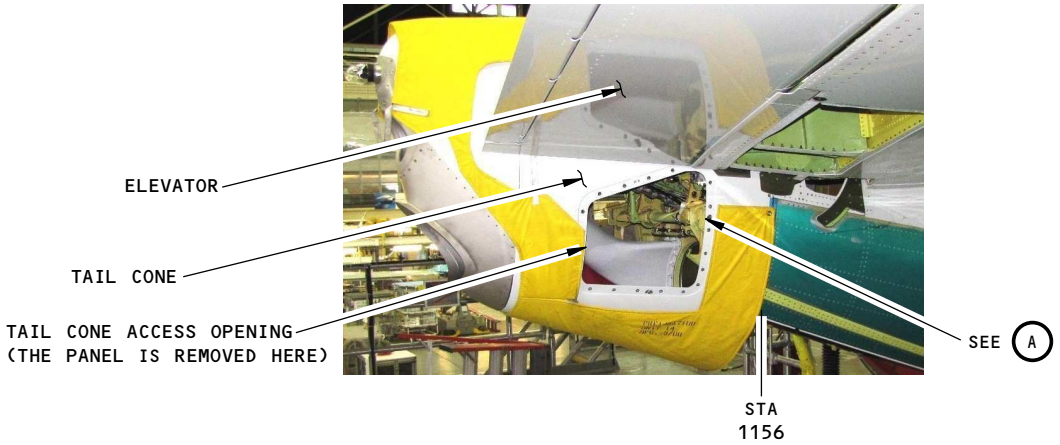

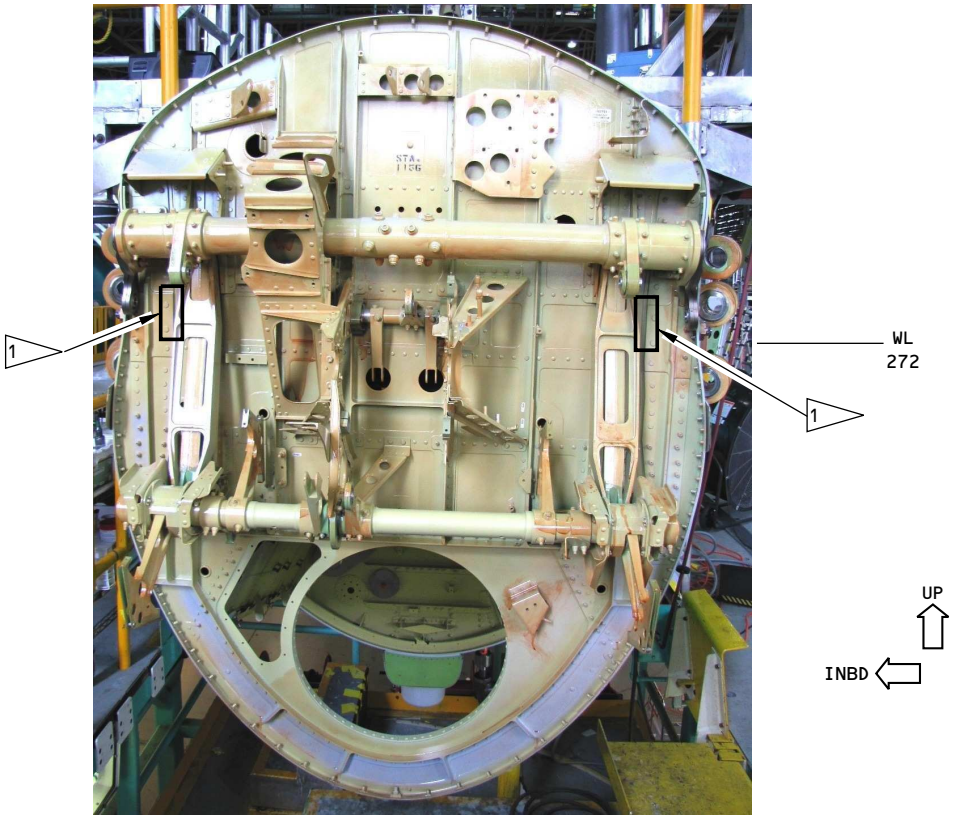

THIS IS THE VIEW OF THE AFT SIDE OF THE BULKHEAD AT STATION 1156
AS YOU LOOK FORWARD. THE TAIL CONE IS NOT INSTALLED IN THIS PHOTO.

A

1 SEE VIEWS B AND C FOR THESE TWO INSPECTION AREAS ON THE BULKHEAD WEB AND EDGE OF THE OUTER CHORD.

2160583 S0000472385_V1

Inspection Areas
Figure 1 (Sheet 1 of 3)

BOEING PROPRIETARY - Copyright © Unpublished Work - See title page for details

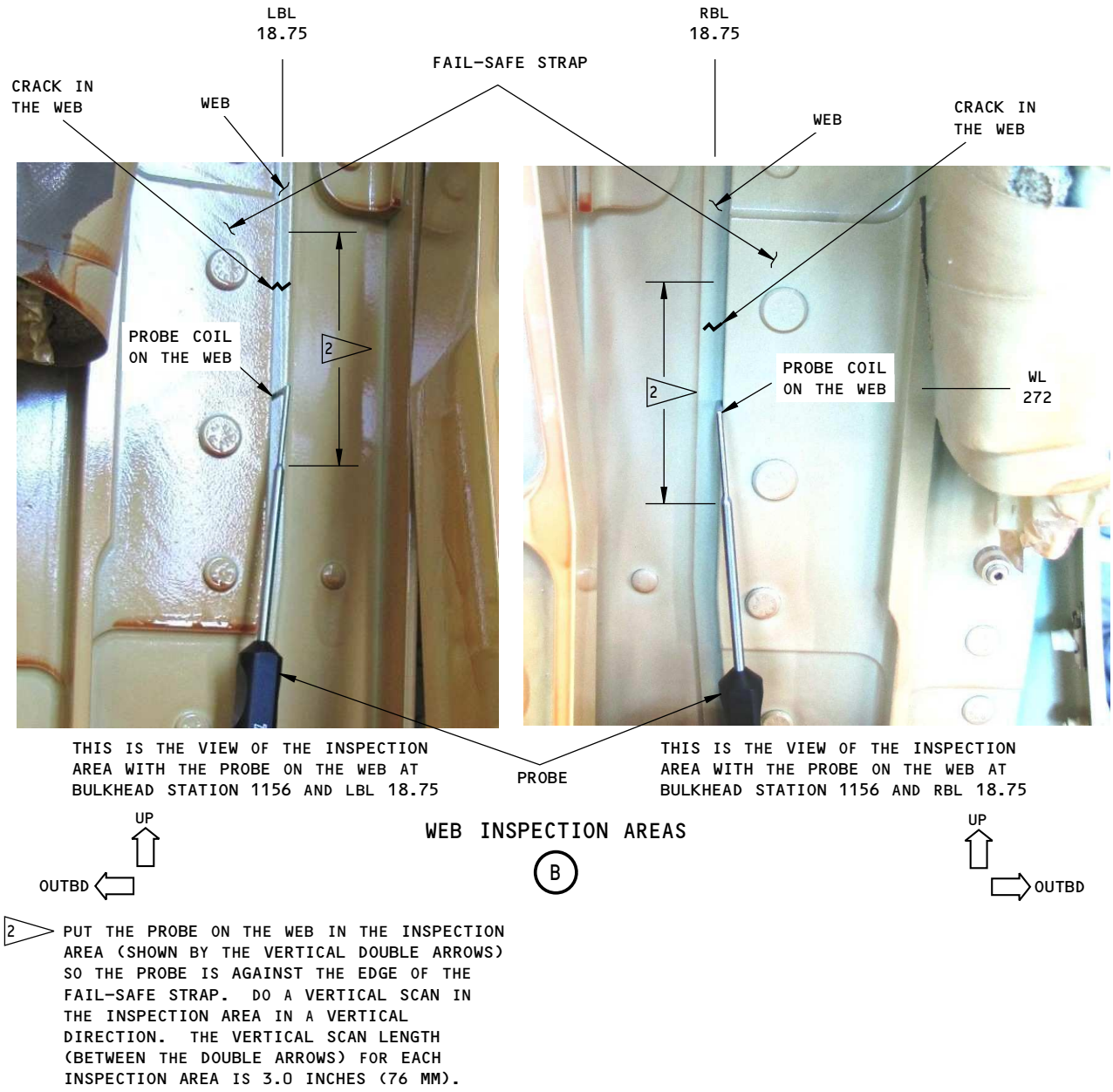

2160585 S0000472387_V1

Inspection Areas
Figure 1 (Sheet 2 of 3)

BOEING PROPRIETARY - Copyright © Unpublished Work - See title page for details

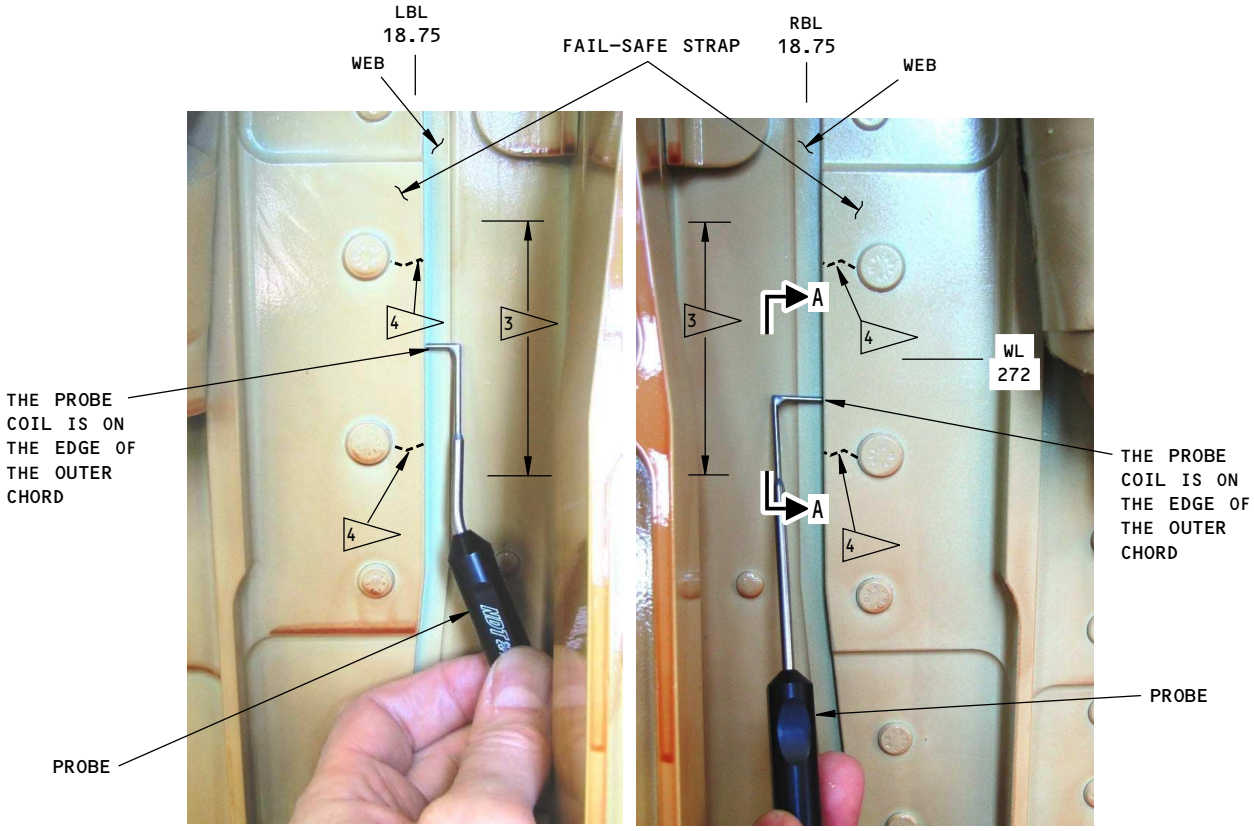

THIS IS THE VIEW OF THE INSPECTION AREA WITH THE PROBE ON THE EDGE OF THE OUTER CHORD AT BULKHEAD STATION 1156 AND LBL 18.75

THIS IS THE VIEW OF THE INSPECTION AREA WITH THE PROBE ON THE EDGE OF THE OUTER CHORD AT BULKHEAD STATION 1156 AND RBL 18.75

UP
OUTBD

OUTER CHORD INSPECTION AREAS

C

UP
OUTBD

3 PUT THE PROBE COIL ON THE EDGE OF THE OUTER CHORD IN THE INSPECTION AREA (SHOWN BY THE VERTICAL DOUBLE ARROWS) SO THE SIDE OF THE PROBE IS AGAINST THE WEB. USE THE WEB AS A PROBE GUIDE AND DO A VERTICAL SCAN ON THE EDGE OF THE OUTER CHORD IN A VERTICAL DIRECTION. THE VERTICAL SCAN LENGTH (BETWEEN THE DOUBLE ARROWS) FOR EACH INSPECTION AREA IS 3.0 INCHES (76 MM).

4 CRACKS IN THE OUTER CHORD BEHIND THE FAIL-SAFE STRAP

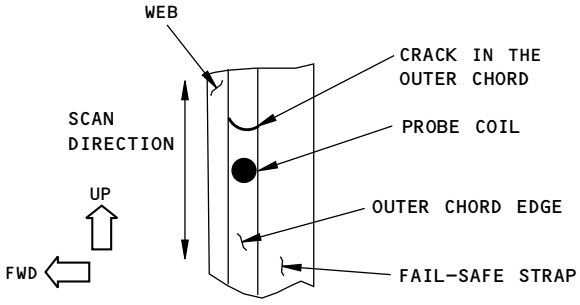

A-A

(THE RIGHT SIDE IS SHOWN HERE; THE LEFT SIDE IS OPPOSITE)

2160587 S0000472388_V1

Inspection Areas
Figure 1 (Sheet 3 of 3)

BOEING PROPRIETARY - Copyright © Unpublished Work - See title page for details

PART 6 - EDDY CURRENT

HINGE FITTINGS OF THE HORIZONTAL STABILIZER AT THE PIVOT PINS OF THE BULKHEAD AT STA 1156

1. Purpose

A. Use this procedure to examine the aluminum hinge fittings in an area that is immediately forward of the bulkhead at station 1156. See Figure 1 for the inspection locations on the left and right sides of the airplane at station 1153.

B. The probe scans are done on the forward side of the hinge fittings. The inspection areas are at station 1153 and WL 272.2 on the left and right sides of the airplane.

C. Use an impedance plane display instrument and an angled pencil probe to do this inspection.

D. 737 Damage Tolerance Rating (D626A001-DTR) Reference:

(1) Item: 53-80-08-1

2. Equipment

A. General

(1) Refer to Part 1, 51-01-00, for data about the equipment manufacturers.

B. Instruments

(1) Refer to Part 6, 51-00-00, Procedure 23, for instrument data and the instruments that were used to help prepare this procedure.

C. Probes

(1) Refer to Part 6, 51-00-00, Procedure 23, for probe data.

(2) Use an angled pencil probe that:

(a) Has a maximum probe diameter of 0.130 inch (3.3 mm).

(b) Has a maximum probe drop of 0.50 inch (13 mm).

(c) Has a minimum total length of 5.0 inches (127 mm).

(d) Can operate between 200 and 300 kHz.

(e) Is shielded.

(3) The angled probes that follow were used to help prepare this procedure.

(a) TPENFLX91-6; Techna NDT

(b) MTF905-50B; Olympus NDT

D. Reference Standard

(1) Refer to Part 6, 51-00-00, Procedure 23, for data about reference standard 126.

3. Prepare for the Inspection

A. Remove the inboard lower panel from the horizontal stabilizer at BS 1156 (on the left and right sides of the airplane). Figure 1, View B, shows the lower panel removed from the horizontal stabilizer.

B. Remove the sliding seals on the fuselage that are immediately forward of BS 1156. See Figure 1.

C. Get access to the inspection areas on the hinge fittings at BS 1153 and WL 272.20 (left and right sides). The access to the inspection area is from below the horizontal stabilizer as you look up. See Figure 1.

BOEING PROPRIETARY - Copyright © Unpublished Work - See title page for details

D. Remove dirt, loose paint or sealant from the scan areas of the hinge fittings. The scan areas are on the outboard sides of the hinge fittings along the forward half of the bushing retainer. See Figure 1 for the scan areas.

4. Instrument Calibration

A. Calibrate the instrument as specified in Part 6, 51-00-00, Procedure 23.

(1) Do the calibration on reference standard 126.

5. Inspection Procedure

A. Refer to Part 6, 51-00-00, Procedure 23, paragraph 6, for general data on surface eddy current inspection procedures.

B. Put the probe on the inspection area of the hinge fitting. Make sure the side of the probe is against the forward edge of the bushing retainer. See Figure 1 for the probe scan area.

C. Balance the instrument.

D. Do a probe scan in a vertical direction in the inspection area. As you do the probe scan, use the bushing retainer as a probe guide. See Figure 1.

E. Do Paragraph 5.A. thru Paragraph 5.D. on the hinge fitting on the other side of the airplane.

6. Inspection Results

A. Refer to Part 6, 51-00-00, Procedure 23, paragraph 7, for instructions to help make an analysis of possible crack indications.

BOEING PROPRIETARY - Copyright © Unpublished Work - See title page for details

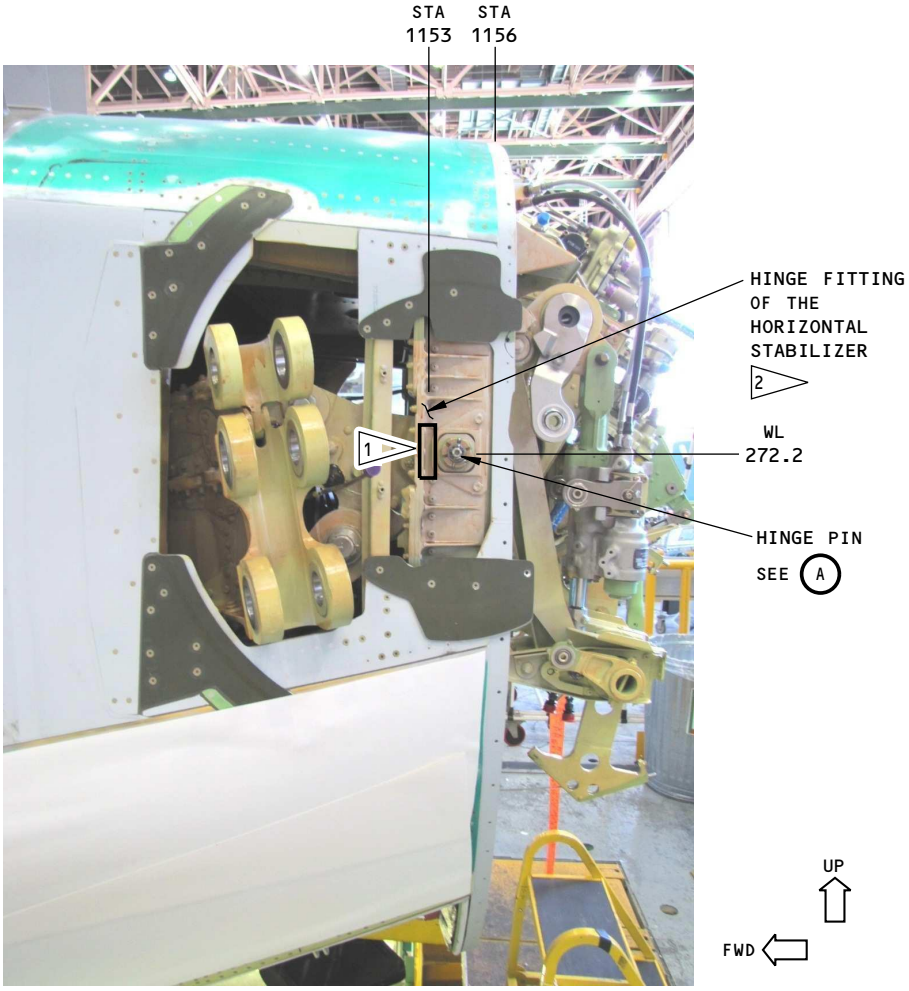

THE INSPECTION AREA ON THE LEFT SIDE OF THE AIRPLANE IS SHOWN.
THE INSPECTION AREA ON THE RIGHT SIDE OF THE AIRPLANE IS OPPOSITE.

NOTES:

- THIS IS A VIEW OF THE INSPECTION AREA ON THE HINGE FITTING OF THE HORIZONTAL STABILIZER WITH THE TAIL CONE AND THE HORIZONTAL STABILIZER REMOVED.
- IT IS NOT NECESSARY TO REMOVE THE HORIZONTAL STABILIZER AND THE TAIL CONE TO DO THIS INSPECTION. SEE VIEW B FOR THE INSPECTION AREA WHEN THE HORIZONTAL STABILIZER AND TAIL CONE ARE INSTALLED.

1 SEE VIEWS A AND B FOR A LARGER VIEW OF THIS INSPECTION AREA ON THE HINGE FITTING.

2 THE SLIDING SEALS HAVE BEEN REMOVED IN THIS PHOTO TO GET ACCESS TO THE INSPECTION AREA.

2160588 S0000472391_V1

Inspection Areas
Figure 1 (Sheet 1 of 3)

BOEING PROPRIETARY - Copyright © Unpublished Work - See title page for details

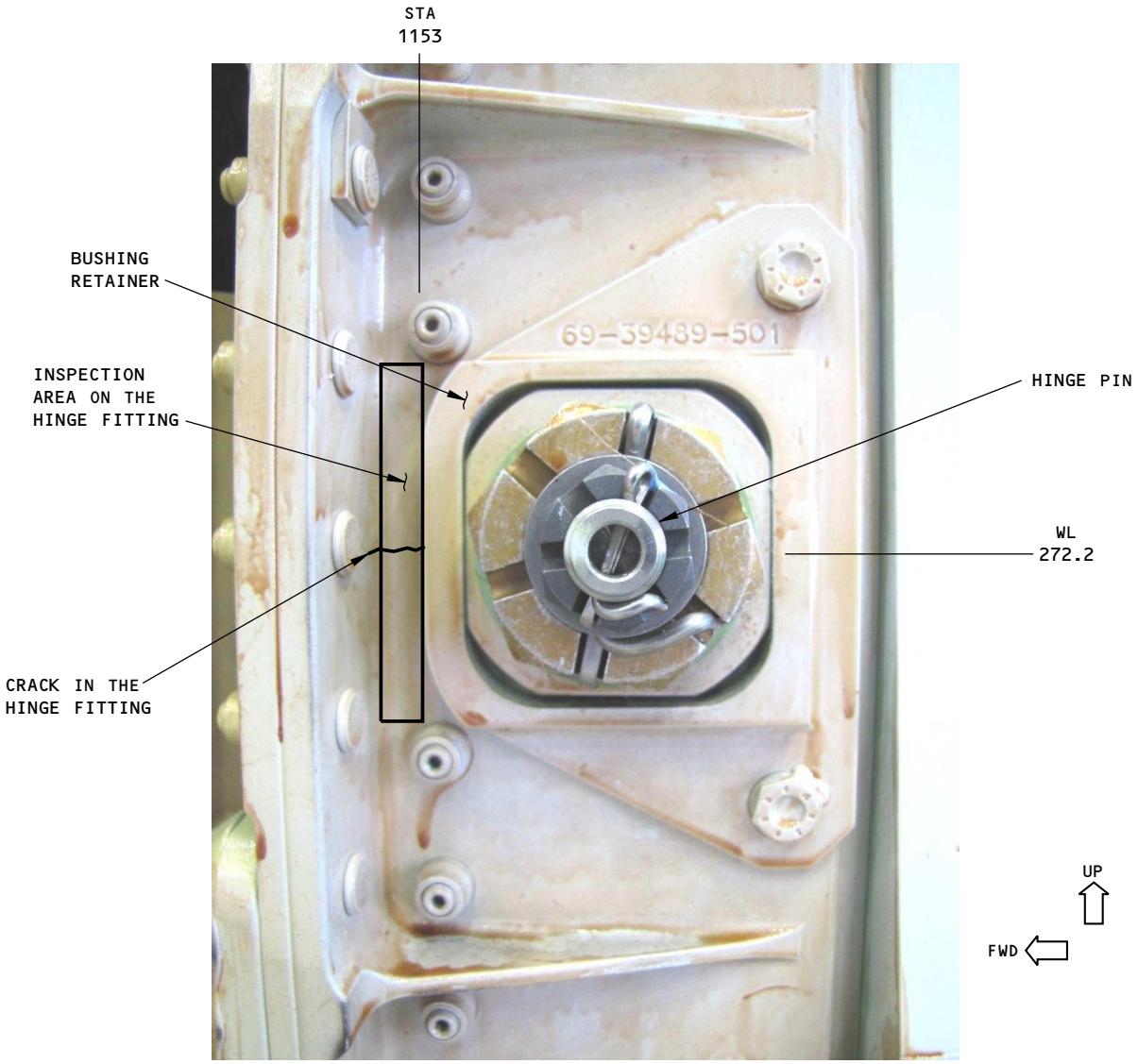

A

NOTES:

- THIS IS A LARGER VIEW OF THE INSPECTION AREA FOR THE HINGE FITTING SHOWN WITH THE HORIZONTAL STABILIZER REMOVED. TO SEE HOW TO GET ACCESS TO THE INSPECTION AREA WITH THE HORIZONTAL STABILIZER INSTALLED, SEE VIEW B.
- PUT THE PROBE ON THE INSPECTION AREA ON THE HINGE FITTING.
- PUT THE SIDE OF THE PROBE AGAINST THE FORWARD EDGE OF THE BUSHING RETAINER AND DO A VERTICAL SCAN IN THE INSPECTION AREA.

2160590 S0000472392_V1

Inspection Areas
Figure 1 (Sheet 2 of 3)

BOEING PROPRIETARY - Copyright © Unpublished Work - See title page for details

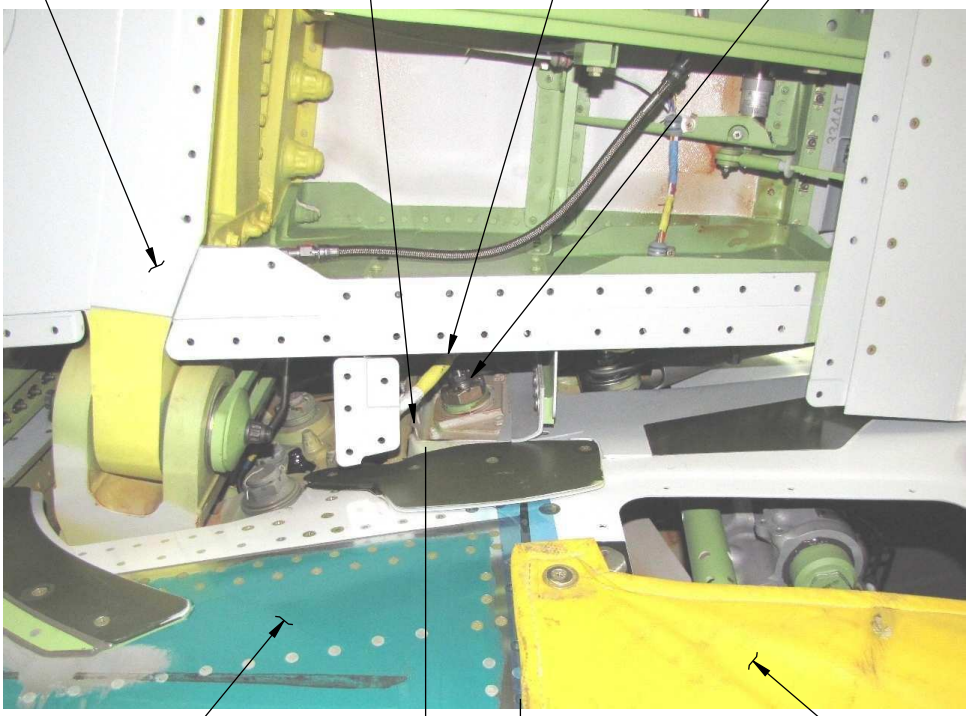

B

UP

FWD

NOTES:

- THIS VIEW SHOWS HOW TO GET ACCESS TO THE INSPECTION AREA WITH THE HORIZONTAL STABILIZER INSTALLED.
- THIS IS A VIEW OF THE INSPECTION AREA ON THE HINGE FITTING ON THE LEFT SIDE OF THE AIRPLANE AS YOU LOOK UP. THE INSPECTION AREA ON THE RIGHT SIDE OF THE AIRPLANE IS OPPOSITE.
- SEE VIEW A FOR A LARGER VIEW OF THE INSPECTION AREA ON THE HINGE FITTING.

3 THE INSPECTION AREA CAN BE SEEN IN THIS PHOTO BECAUSE THE LOWER INBOARD PANEL AND THE SLIDING SEALS HAVE BEEN REMOVED.

2160592 S0000472394_V1

Inspection Areas
Figure 1 (Sheet 3 of 3)

BOEING PROPRIETARY - Copyright © Unpublished Work - See title page for details

PART 6 - EDDY CURRENT

INNER CHORD OF THE FORWARD AND AFT EDGE FRAMES (STA 440 AND 492.4) BETWEEN S-17R AND S-18R AT THE FORWARD CARGO DOOR SURROUND

1. Purpose

A. Use this procedure to help find surface cracks in the inner chord of the forward and aft edge frames of the forward cargo door surround. See Figure 1 for the inspection areas.

B. 737 Maintenance Planning Document (MPD) Damage Tolerance Record (DTR) Check Form Reference:

(1) Item: 53-30-08-4

2. Equipment

A. General

(1) All eddy current instruments that have an impedance-plane display are permitted for use if they can be calibrated on the reference standard as specified in Paragraph 4.

(2) Refer to Part 1, 51-01-00, for data about the equipment manufacturers.

B. Instrument

(1) Use an eddy current instrument that:

(a) Has an impedance plane display.

(b) Operates at a frequency range of 50 to 500 kHz.

(2) The instrument that follows was used to help prepare this procedure.

(a) Nortec 500; Olympus NDT

C. Probe

(1) Use a straight or right-angle shielded probe with a maximum diameter of 0.2 inch (5 mm). Refer to Part 6, 51-00-00, Procedure 23, paragraph 3.C, for data about probe selection.

(2) The probe that follows was used to help prepare this procedure.

(a) MP-50; NDT Engineering Corp (Olympus)

D. Reference Standards

(1) Use reference standard 126, or an equivalent, as given in Part 6, 51-00-00, Procedure 23, paragraph 3.D.

3. Prepare for the Inspection

A. Get access to the inspection area shown in Figure 1.

B. Remove loose paint, dirt and sealant from the surface of the inspection areas as necessary.

4. Instrument Calibration

A. Calibrate the equipment as specified in Part 6, 51-00-00, Procedure 23, paragraph 5, and as follows:

(1) Use reference standard 126 or an equivalent.

5. Inspection Procedure

A. Examine the inner chord of the aft edge frame at STA 492.4 on the forward cargo door surround for cracks between S-17R and S-18R as follows:

BOEING PROPRIETARY - Copyright © Unpublished Work - See title page for details

(1) Find the inspection area. See Figure 1.

(2) Calibrate the instrument as specified in Paragraph 4.

(3) Make a 360 degree scan around each of the 12 fasteners shown on the inner chord of the aft edge frame on the forward cargo door surround.

B. Do Paragraph 5.A. again to examine the inner chord of the forward edge frame at STA 440 for cracks. The fastener inspection locations at the forward edge frame are almost the same as the aft edge frame.

6. Inspection Results

A. See Part 6, 51-00-00, Procedure 23, paragraph 7, for instructions to help make an analysis of signals that occur during the inspection.

BOEING PROPRIETARY - Copyright © Unpublished Work - See title page for details

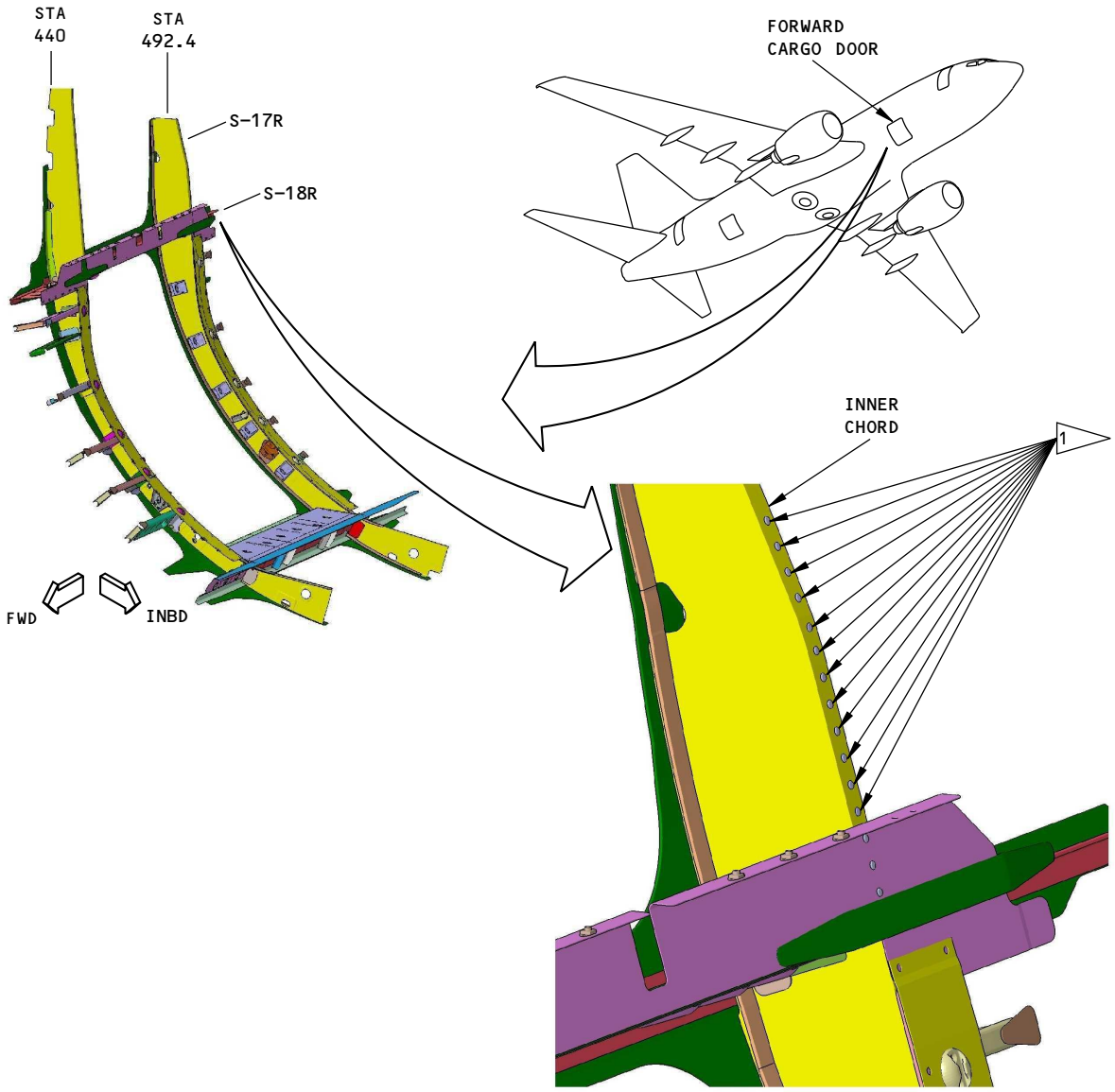

THE INNER CHORD AT THE AFT EDGE FRAME IS SHOWN AS YOU LOOK AFT AND OUTBOARD. THE INNER CHORD AT THE FORWARD EDGE FRAME IS ALMOST THE SAME

NOTES:

- MOVE THE PROBE 360 DEGREES AROUND THE 12 FASTENER HEADS SHOWN TO EXAMINE THE INNER CHORD FOR CRACKS AT THE FORWARD AND AFT EDGE FRAMES OF THE FORWARD CARGO DOOR SURROUND BETWEEN S-17R AND S-18R.

1 INSPECTION AREA

2160593 S0000472397_V1

Inspection Areas
Figure 1

BOEING PROPRIETARY - Copyright © Unpublished Work - See title page for details

AFT CARGO DOOR CUTOUT - INSPECTION OF THE INNER CHORD FROM S-18R TO S-26R AND THE FAIL-SAFE STRAP FROM S-17R TO S-18R AT THE FORWARD AND AFT EDGE FRAMES

1. Purpose

A. Use this procedure to help find surface cracks in the inner chords and fail-safe straps of the forward and aft edge frames at the aft cargo door cutout. See Figure 1 for the inspection locations.

B. 737 Maintenance Planning Document (MPD) Damage Tolerance Record (DTR) Check Form Reference:

(1) Item: 53-60-08-1

(2) Item: 53-60-08-2

2. Equipment

A. General

(1) All eddy current instruments that have an impedance plane display are permitted for use if they can be calibrated on the reference standard as specified in Paragraph 4.

(2) Refer to Part 1, 51-01-00, for data about the equipment manufacturers.

B. Instrument

(1) Use an eddy current instrument that:

(a) Has an impedance plane display.

(b) Operates at a frequency range of 50 to 500 kHz.

(2) The instrument that follows was used to help prepare this procedure.

(a) Nortec 500; Olympus NDT

C. Probe

(1) Use a straight or right-angle shielded probe with a maximum diameter of 0.2 inches (5.1 mm). Refer to Part 6, 51-00-00, Procedure 23, paragraph 3.C., for data about probe selection

(2) The probe that follows was used to help prepare this procedure.

(a) MP-50; NDT Engineering Corp (Olympus)

D. Reference Standards

(1) Use reference standards 126 and 188A, or equivalents, as given in Part 6, 51-00-00, Procedure 23, paragraph 3.D.

3. Prepare for the Inspection

A. Get access to the inspection areas shown in Figure 1.

B. Remove loose paint, dirt and sealant from the surface of the inspection areas and the door stops as necessary.

4. Instrument Calibration

A. Calibrate the equipment as specified in the calibration instructions of Part 6, 51-00-00, Procedure 23, paragraph 5, and as follows:

BOEING PROPRIETARY - Copyright © Unpublished Work - See title page for details

(1) To examine the inner chord of the forward and aft edge frames that are identified by flagnote 1 in Figure 1, use reference standard 126 or an equivalent reference standard.

(2) To examine around the fasteners shown by flagnote 2 in Figure 1, use the rivet side of reference standard 188A or an equivalent reference standard. During the calibration:

(a) Keep the probe lightly against the fastener and a minimum of 90 degrees away from the notch during instrument balance (null).

(b) Keep the probe lightly against the head of the fastener when a scan is made across the reference notch.

5. Inspection Procedure

A. Examine the inner chord of the forward and aft edge frames for cracks at the aft cargo door cutout between S-18R and S-26R (see flagnote 1 in Figure 1) as follows:

NOTE: This inspection is specified in DTR Check Form Item 53-60-08-1.

(1) Calibrate the instrument as specified in Paragraph 4.A. and Paragraph 4.A.(1).

(2) Make a scan of each inner chord as specified in Part 6, 51-00-00, Procedure 23, paragraph 6, in an up and down direction as shown in Figure 1. Use a nonconductive material with a curve that is equivalent to the curve of the inner chord as a probe guide.

B. Examine the fail-safe strap of the inner chord for cracks at the forward and aft edge frames at the fastener locations between S-17R and S-18R (see flagnote 2 in Figure 1) as follows:

NOTE: This inspection is specified in DTR Check Form Item 53-60-08-2.

(1) Calibrate the instrument as specified in Paragraph 4.A. and Paragraph 4.A.(2).

(2) Make a scan around the fasteners as specified in the inspection instructions of Part 6, 51-00-00, Procedure 23, paragraph 6.

6. Inspection Results

A. Refer to Part 6, 51-00-00, Procedure 23, paragraph 7, for instructions to help make an analysis of signals that occur during the inspection.

BOEING PROPRIETARY - Copyright © Unpublished Work - See title page for details

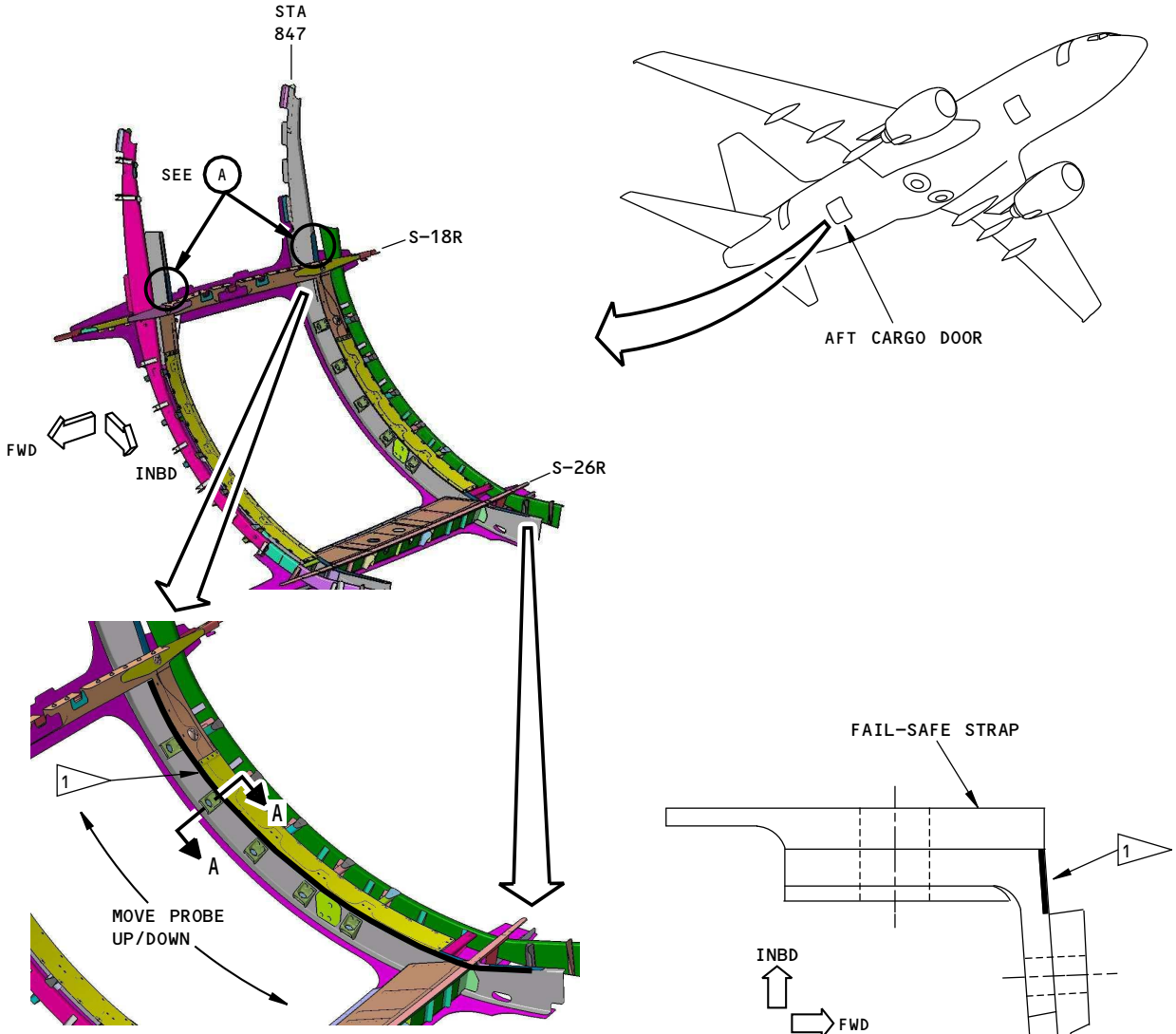

THE AFT EDGE IS SHOWN AS YOU LOOK AFT AND OUTBOARD; THE FORWARD EDGE IS ALMOST THE SAME BUT OPPOSITE

NOTES:

INSPECTION LOCATIONS

- EXAMINE THE INNER CHORD OF THE CARGO DOOR CUTOUT BETWEEN S-18R AND S-26R. MOVE THE PROBE IN AN UP AND DOWN DIRECTION TO FIND CRACKS THAT ARE ALIGNED IN THE FORWARD AND AFT DIRECTION.

1 DTR CHECK FORM ITEM 53-60-08-1 INSPECTION AREA

2160596 S0000472400_V1

Inspection Areas
Figure 1 (Sheet 1 of 2)

BOEING PROPRIETARY - Copyright © Unpublished Work - See title page for details

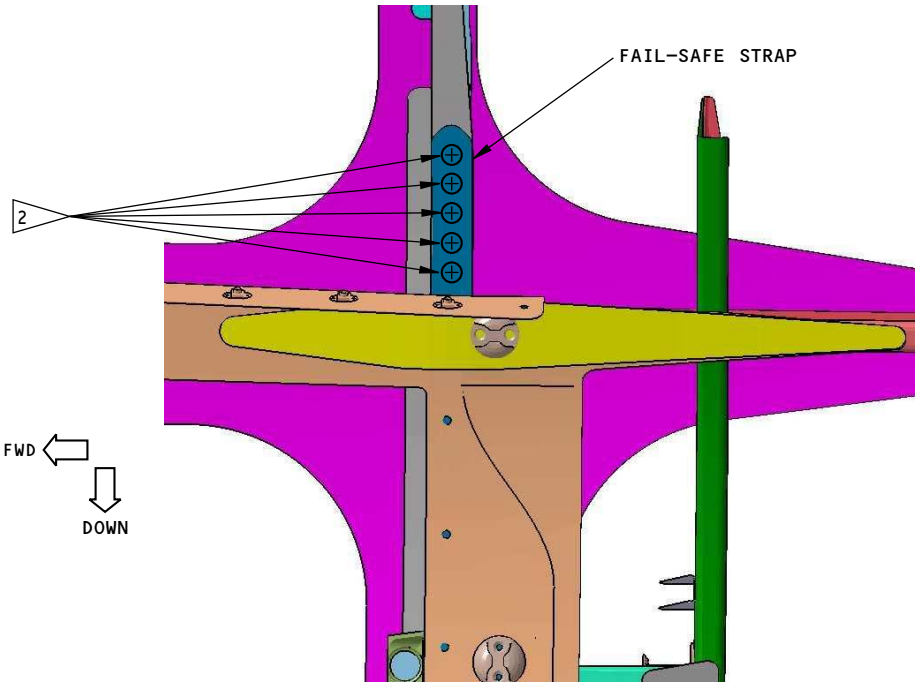

THE AFT EDGE OF THE FAIL-SAFE STRAP
IS SHOWN AS YOU LOOK OUTBOARD;
THE FORWARD EDGE OF THE FAIL-SAFE
STRAP IS ALMOST THE SAME

A

NOTES:

⊕ INSPECTION LOCATIONS

- MAKE A SCAN AROUND THE 5 FASTENERS SHOWN TO EXAMINE THE FAIL-SAFE STRAP FROM S-17R TO S-18R.

2 DTR CHECK FORM ITEM 53-60-08-2 INSPECTION AREA

2160597 S0000472401_V1

Inspection Areas
Figure 1 (Sheet 2 of 2)

BOEING PROPRIETARY - Copyright © Unpublished Work - See title page for details

SURFACE INSPECTION OF THE FRAME AT THE CUTOUT FOR THE FORWARD ENTRY DOOR - STA 303.9, S-7L TO S-13L

1. Purpose

A. Use this procedure to help find surface cracks around fasteners that connect the skin and chords between stringers S-7L and S-13L at STA 303.9 at the cutout for the forward entry door. Examine the locations identified in Figure 1.

B. 737 Maintenance Planning Document (MPD) Damage Tolerance Record (DTR) Check Form Reference:

(1) Item: 53-10-14-4 (HFEC) for S-11L to S-12L. See Figure 1.

(2) Item: 53-10-14-5 (HFEC) for S-7L to S-11L and S-12L to S-13L. See Figure 1.

2. Equipment

A. General

(1) Use inspection equipment that can be calibrated on the reference standard as specified in Paragraph 4.

(2) Refer to Part 1, 51-01-00, for data about the equipment manufacturers.

B. Instrument

(1) Use an eddy current instrument that:

(a) Has an impedance plane display.

(b) Operates at a frequency range of 50 to 500 kHz.

(2) The instruments that follow were used to help prepare this procedure.

(a) Nortec 1000; Staveley (Olympus)

(b) Locator 2d; Hocking (General Electric)

C. Probes

(1) A shielded, straight or right-angle probe is necessary for this inspection.

(2) Refer to Part 6, 51-00-00, Procedure 23, paragraph 3.C, for data about probe selection.

(3) The probe that follows was used to help prepare this procedure.

(a) MTF905-50; NDT Engineering Corp (Olympus)

D. Reference Standards

(1) Use reference standard NDT1048, or an equivalent, as given in Part 6, 51-00-00, Procedure 23, paragraph 3.D.

E. Circle Template

(1) Use a nonconductive circle template as a probe guide to help find a 0.10 inch (2.5 mm) long crack from the edge of the fastener.

3. Prepare for the Inspection

A. Identify the inspection locations shown in Figure 1.

B. Lightly smooth rough surfaces and sharp edges of chipped paint.

BOEING PROPRIETARY - Copyright © Unpublished Work - See title page for details

C. Fully clean the inspection area.

4. Instrument Calibration

A. Calibrate the equipment as specified in Part 6, 51-00-00, Procedure 23, paragraph 5. Use reference standard NDT1048, or an equivalent, for the calibration.

5. Inspection Procedure

A. Use a nonconductive circle template as a probe guide to help find 0.10 inch (2.5 mm) long cracks from the edge of the fastener. Make a scan of the skin at STA 303.9 of the forward entry door as shown in Figure 1.

(1) For Item 53-10-14-4, examine around the two rows of fasteners that connect the forward edge frame and skin between stringers S-11L to S-12L as shown in Figure 1. Refer to Part 6, 51-00-00, Procedure 23, paragraph 6, for the inspection procedure.

(2) For Item 53-10-14-5, examine around the two rows of fasteners that connect the forward edge frame and skin from S-7L to S-11L and S-12L to S-13L as shown in Figure 1. Refer to Part 6, 51-00-00, Procedure 23, paragraph 6, for the inspection procedure.

6. Inspection Results

A. Refer to Part 6, 51-00-00, Procedure 23, paragraph 7, for instructions to help make an analysis of indications that occur during the inspection.

BOEING PROPRIETARY - Copyright © Unpublished Work - See title page for details

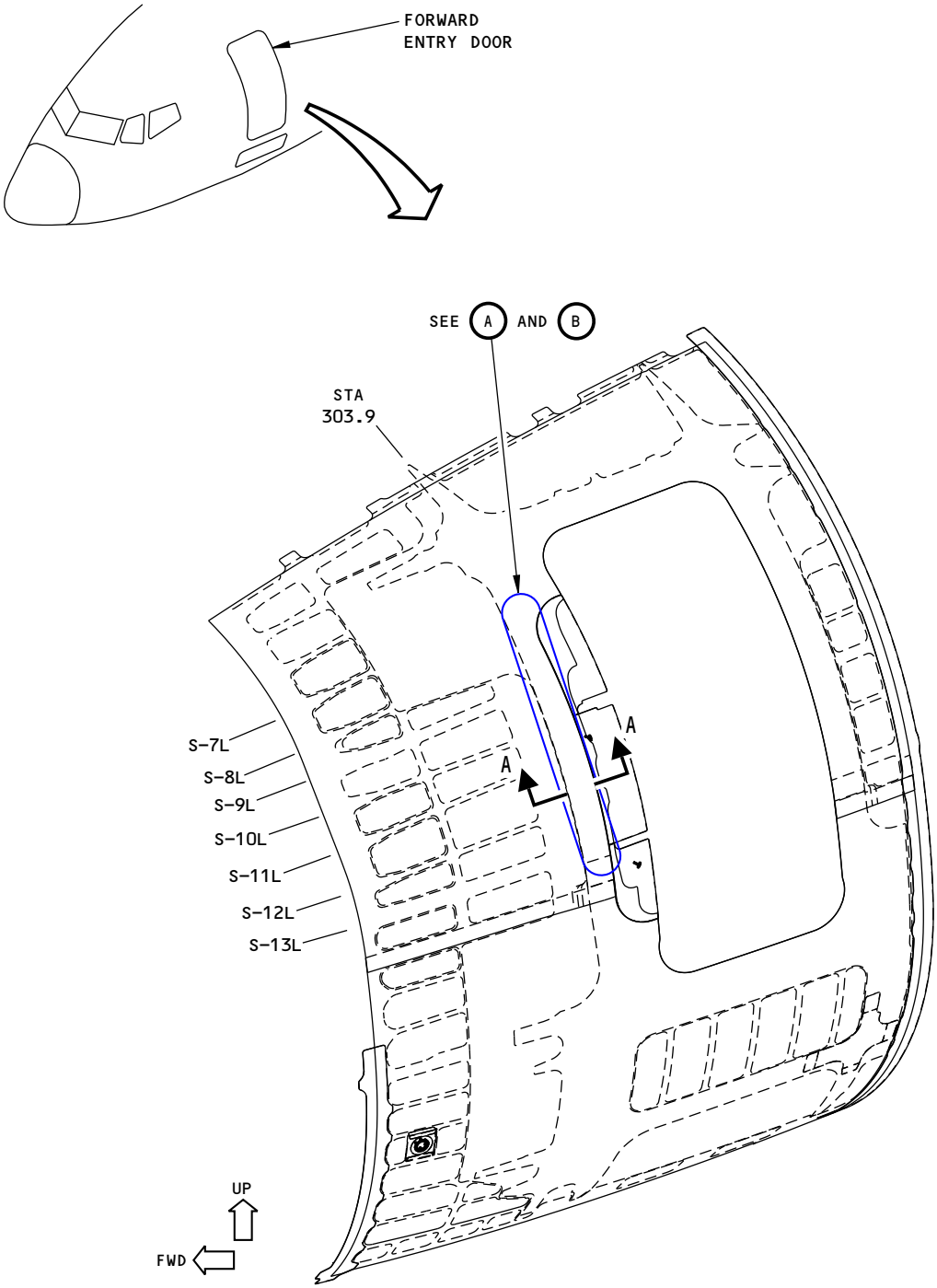

2160598 S0000472404_V1

Frame Inspection Area for the Forward Entry Door
Figure 1 (Sheet 1 of 4)

BOEING PROPRIETARY - Copyright © Unpublished Work - See title page for details

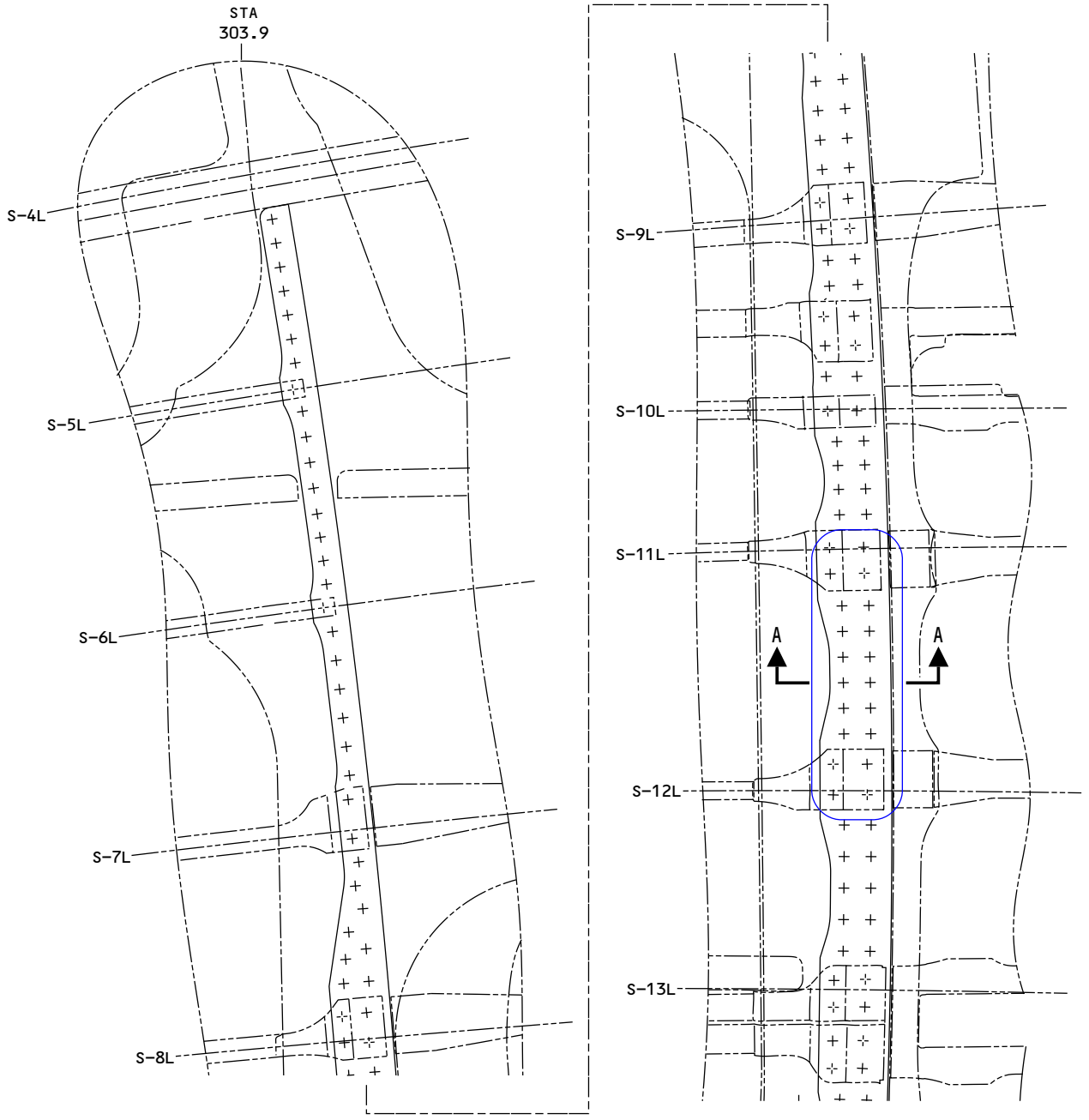

NOTES

- USE A CIRCLE TEMPLATE TO HELP FIND CRACKS AROUND FASTENERS IN THE INSPECTION AREA FROM S-11L TO S-12L FOR DTR CHECK FORM ITEM 53-10-14-4.

2160599 S0000472405_V1

Frame Inspection Area for the Forward Entry Door
Figure 1 (Sheet 2 of 4)

BOEING PROPRIETARY - Copyright © Unpublished Work - See title page for details

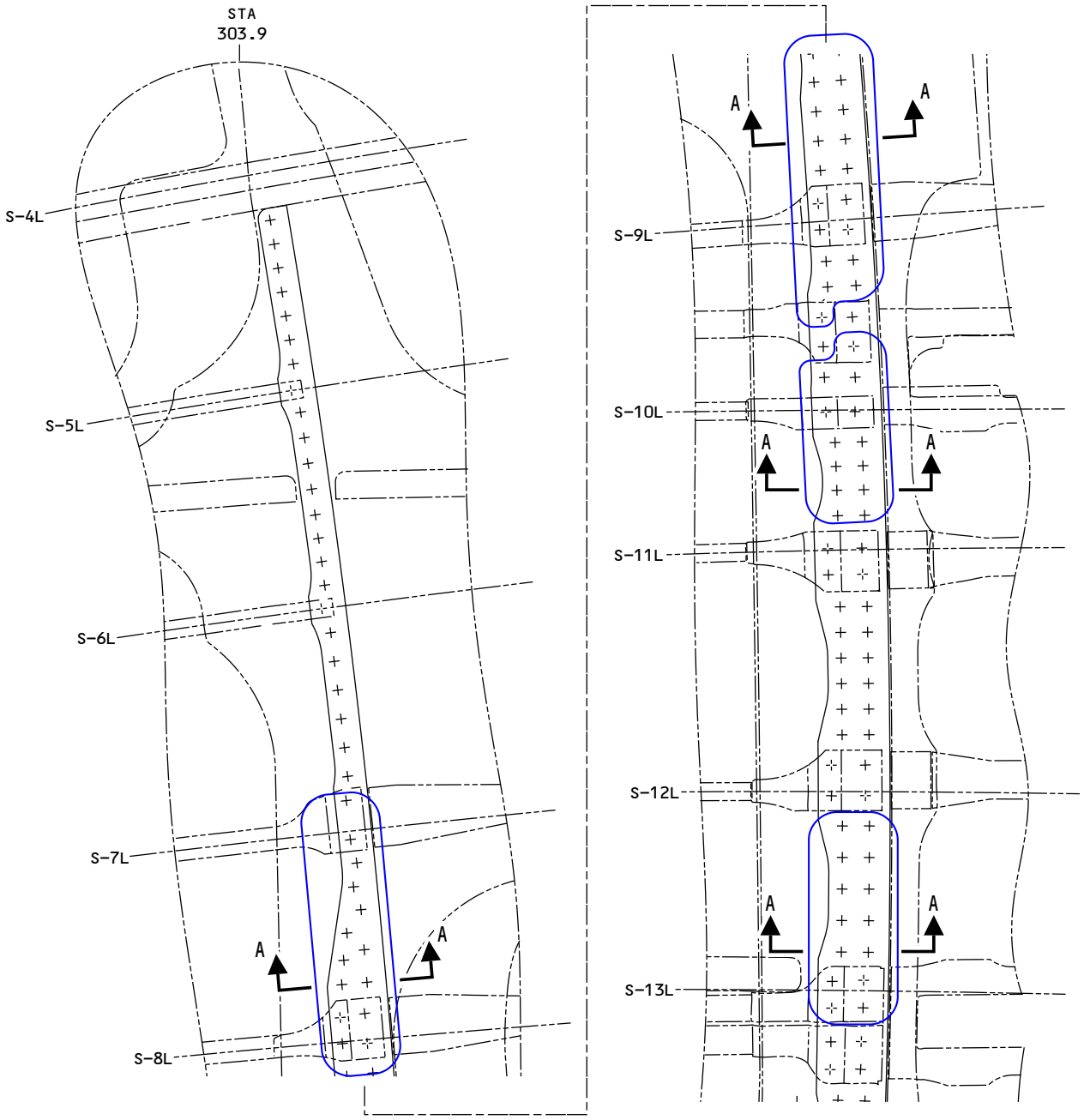

NOTES:

- USE A CIRCLE TEMPLATE TO HELP FIND CRACKS AROUND FASTENERS IN THE INSPECTION AREA FROM S-7L TO S-11L AND S-12L TO S-13L FOR DTR CHECK FORM ITEM 53-10-14-5.

2160600 S0000472406_V1

Frame Inspection Area for the Forward Entry Door
Figure 1 (Sheet 3 of 4)

BOEING PROPRIETARY - Copyright © Unpublished Work - See title page for details

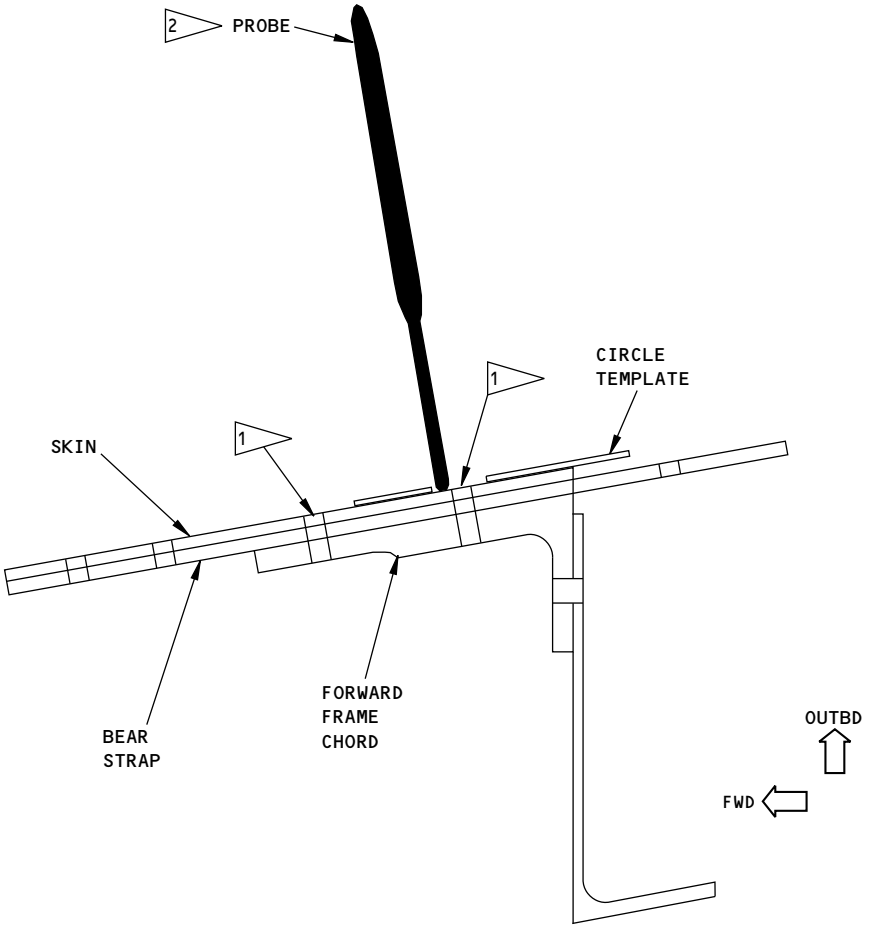

A-A
(TYPICAL)

NOTES

1. FASTENER LOCATIONS TO EXAMINE
2. USE A NONCONDUCTIVE CIRCLE TEMPLATE THAT CAN FIND A 0.10 INCH (2.5 MM) CRACK FROM THE EDGE OF THE FASTENER AS SHOWN.

2160601 S0000472407_V1

Frame Inspection Area for the Forward Entry Door
Figure 1 (Sheet 4 of 4)

BOEING PROPRIETARY - Copyright © Unpublished Work - See title page for details

PART 6 - EDDY CURRENT

FORWARD CARGO DOOR SURROUND - INNER CHORD OF THE FORWARD AND AFT EDGE FRAMES AT STA 440 AND 492.4, BETWEEN S-18R AND S-26R

1. Purpose

A. Use this procedure to help find surface cracks in the inner chord of the forward and aft edge frames of the forward cargo door surround for the 737NG. See Figure 1 for the inspection areas.

B. 737 Damage Tolerance Rating (D626A001-DTR) Reference:

(1) Item: 53-30-08-3

2. Equipment

A. General

(1) All eddy current instruments that have an impedance plane display are permitted for use if they can be calibrated on the reference standard as specified in Paragraph 4.

(2) Refer to Part 1, 51-01-00, for data about the equipment manufacturers.

B. Instrument

(1) Use an eddy current instrument that:

(a) Has an impedance plane display.

(b) Operates at a frequency range of 50 to 500 kHz.

(2) The instrument that follows was used to help prepare this procedure.

(a) Nortec 500; Olympus NDT

C. Probe

(1) Use a straight or right-angle shielded probe with a maximum diameter of 0.2 inch (5 mm). Refer to Part 6, 51-00-00, Procedure 23, paragraph 3.C for data about probe selection.

(2) The probe that follows was used to help prepare this procedure.

(a) MP-50; NDT Engineering Corp (Olympus)

D. Reference Standards

(1) Use reference standard 126, or an equivalent, as given in Part 6, 51-00-00, Procedure 23, paragraph 3.D.

3. Prepare for the Inspection

A. Get access to the inspection area shown in Figure 1.

B. Remove loose paint, dirt and sealant from the surface of the inspection areas as necessary.

4. Instrument Calibration

A. Calibrate the equipment as specified in Part 6, 51-00-00, Procedure 23, paragraph 5, and as follows:

(1) Use reference standard 126 or an equivalent.

5. Inspection Procedure

A. Examine the inner chord of the forward and aft edge frames on the forward cargo door surround for cracks between S-18R and S-26R.

BOEING PROPRIETARY - Copyright © Unpublished Work - See title page for details

(1) Find the inspection area shown in Figure 1.

(2) Calibrate the instrument as specified in Paragraph 4.

(3) Make a scan of the inner chord of the aft edge frame on the forward cargo door surround. Move the probe in an up and down direction as shown in Figure 1 and as specified in Part 6, 51-00-00, Procedure 23, paragraph 6. Use the edge of the fail-safe strap as a guide for the probe where possible. If it is not possible to use the edge of the fail-safe strap as a probe guide, use a nonconductive material with a curve that is almost the same as the frame chord.

(4) Do Paragraph 5.A.(1) thru Paragraph 5.A.(3) again on the inner chord of the forward edge frame. The forward edge frame inspection location is almost the same as the aft edge frame but opposite.

6. Inspection Results

A. See Part 6, 51-00-00, Procedure 23, paragraph 7, for instructions to help make an analysis of signals that occur during the inspection.

BOEING PROPRIETARY - Copyright © Unpublished Work - See title page for details

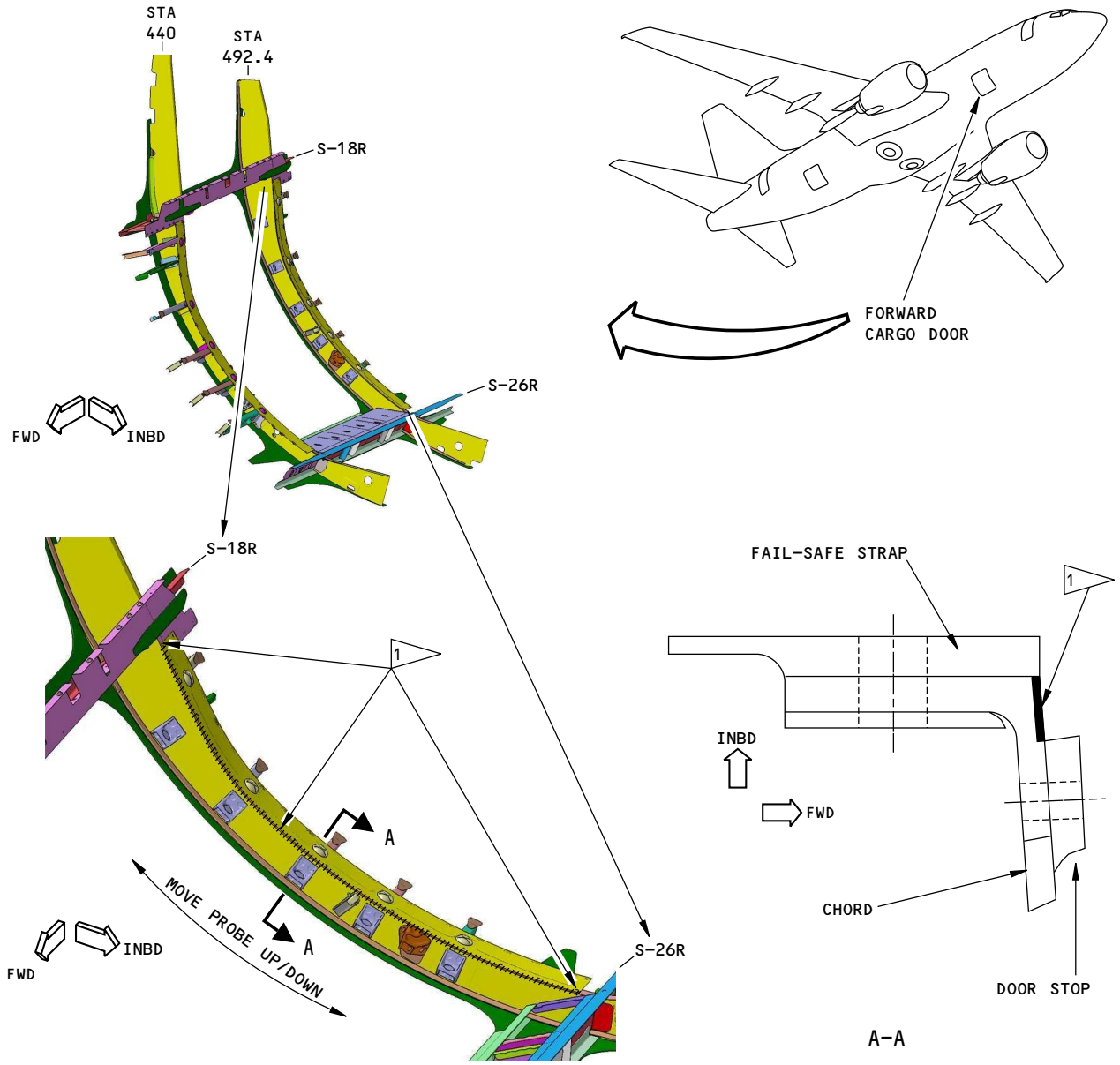

NOTES:

INSPECTION LOCATIONS

- THE AFT CHORD IS SHOWN AS YOU LOOK AFT AND OUTBOARD. THE FORWARD CHORD IS ALMOST THE SAME BUT OPPOSITE.
- EXAMINE THE INNER CHORD FOR CRACKS AT THE FORWARD AND AFT FRAMES OF THE FORWARD CARGO DOOR SURROUND BETWEEN S-18R AND S-26R. MOVE THE PROBE IN AN UP AND DOWN DIRECTION TO FIND CRACKS IN THE INBOARD AND OUTBOARD DIRECTION

1 DTR CHECK FORM ITEM 53-30-08-3 INSPECTION AREA

2160602 S0000472409_V1

Inspection Areas
Figure 1

BOEING PROPRIETARY - Copyright © Unpublished Work - See title page for details

PART 6 - EDDY CURRENT

FORWARD CARGO DOOR SURROUND - BEAR STRAP AT S-24R, BS 440 AND BS 492.4

1. Purpose

A. Use this procedure to help find surface cracks in the bear strap of the forward and aft edge frames of the forward cargo door surround for the 737NG. See Figure 1 for the inspection areas.

NOTE: The inspection specified in Part 4, 53-10-07 must also be done to complete the inspection specified by the Paragraph 1.B. DTR's.

B. 737 Damage Tolerance Rating (D626A001-DTR) Reference:

(1) Item: 53-30-08-6

(2) Item: 53-60-08

2. Equipment

A. General

(1) All eddy current instruments that have an impedance plane display are permitted for use if they can be calibrated on the reference standard as specified in Paragraph 4.

(2) Refer to Part 1, 51-01-00, for data about the equipment manufacturers.

B. Instrument

(1) Use an eddy current instrument that:

(a) Has an impedance plane display.

(b) Operates at a frequency range of 50 to 500 kHz.

(2) The instrument that follows was used to help prepare this procedure.

(a) Nortec 500; Olympus NDT

C. Probe

(1) Use a straight or right-angle shielded probe with a maximum diameter of 0.2 inch (5 mm). Refer to Part 6, 51-00-00, Procedure 23, paragraph 3.C, for data about probe selection.

(2) The probe that follows was used to help prepare this procedure.

(a) MP-50; NDT Engineering Corp. (Olympus)

D. Reference Standard

(1) Use reference standard 126, or an equivalent, as given in Part 6, 51-00-00, Procedure 23, paragraph 3.D.

3. Prepare for the Inspection

A. Get access to the inspection areas shown in Figure 1.

B. Remove loose paint, dirt and sealant from the surface of the inspection areas as necessary.

4. Instrument Calibration

A. Calibrate the equipment as specified in Part 6, 51-00-00, Procedure 23, paragraph 5. Use reference standard 126, or an equivalent, during calibration.

BOEING PROPRIETARY - Copyright © Unpublished Work - See title page for details

5. **Inspection Procedure**

A. Examine the bear strap of the forward and aft edge frames on the forward cargo door surround for cracks at S-24R as follows:

(1) Find the inspection area shown in Figure 1.

(2) Calibrate the instrument as specified in Paragraph 4.

(3) Make a scan of the bear strap at the aft edge frame on the forward cargo door surround. Move the probe in an up and down direction for 2 inches on each side of S-24R as shown in Figure 1 and as specified in Part 6, 51-00-00, Procedure 23, paragraph 6. Use the edge of the fail-safe strap as a guide for the probe where possible.

(4) Do Paragraph 5.A.(3) again to examine the bear strap at the forward edge frame.

6. **Inspection Results**

A. Refer to Part 6, 51-00-00, Procedure 23, paragraph 7, for instructions to help make an analysis of signals that occur during the inspection.

BOEING PROPRIETARY - Copyright © Unpublished Work - See title page for details

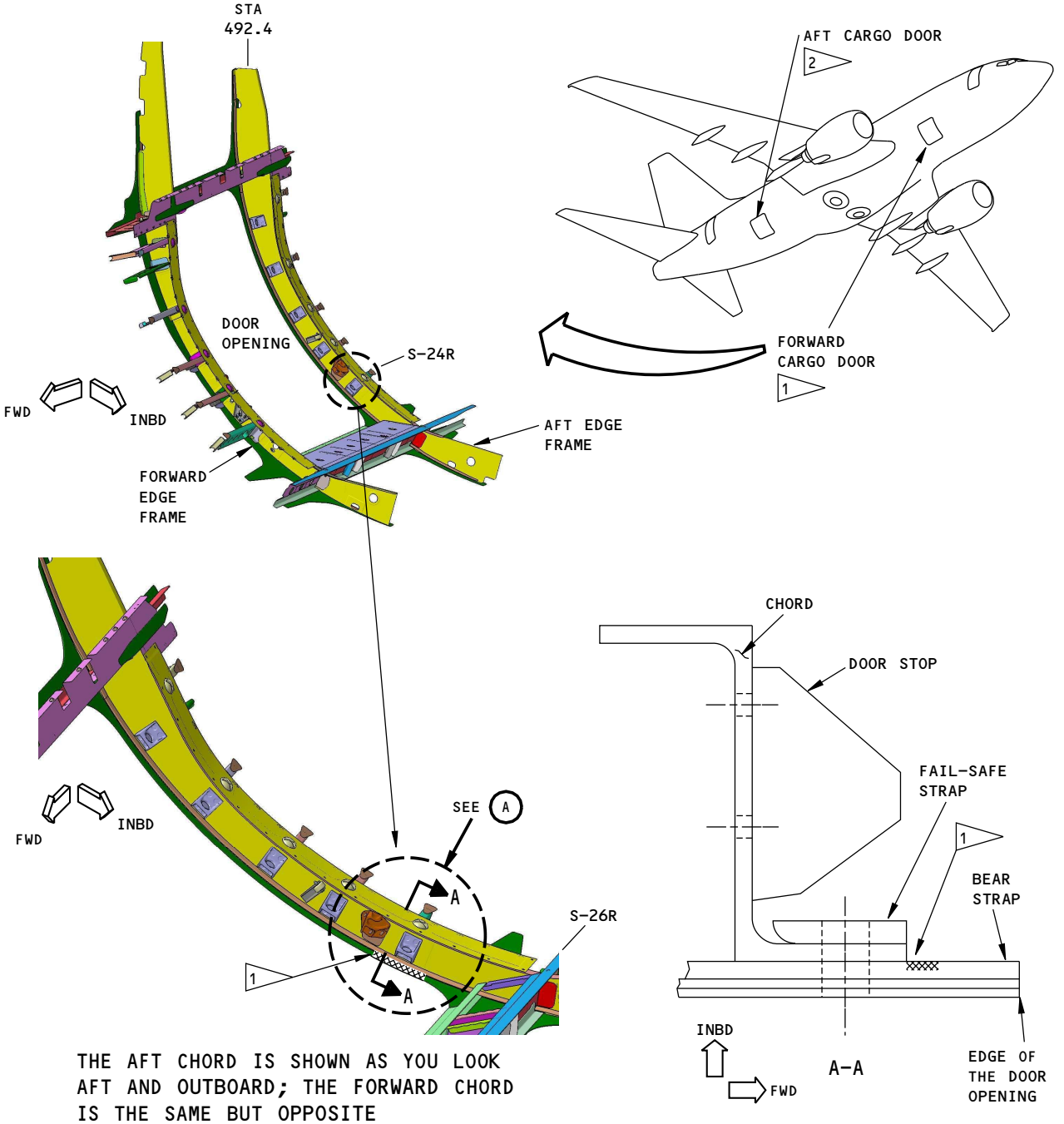

THE AFT CHORD IS SHOWN AS YOU LOOK AFT AND OUTBOARD; THE FORWARD CHORD IS THE SAME BUT OPPOSITE

NOTES:

INSPECTION LOCATIONS

- EXAMINE THE BEAR STRAP OF THE FORWARD CARGO DOOR SURROUND FOR 2 INCHES (50.8 mm) ON EACH SIDE OF S-24R. MOVE THE PROBE IN AN UP AND DOWN DIRECTION TO FIND CRACKS IN THE FORWARD AND AFT DIRECTION.

1 DTR CHECK FORM ITEM 53-30-08-6 INSPECTION AREA.

2 DTR/PSE 53-60-08 INSPECTION AREA AT BS 794.4 AND BS 847.

2161323 S0000472411_V2

Inspection Areas
Figure 1 (Sheet 1 of 2)

BOEING PROPRIETARY - Copyright © Unpublished Work - See title page for details

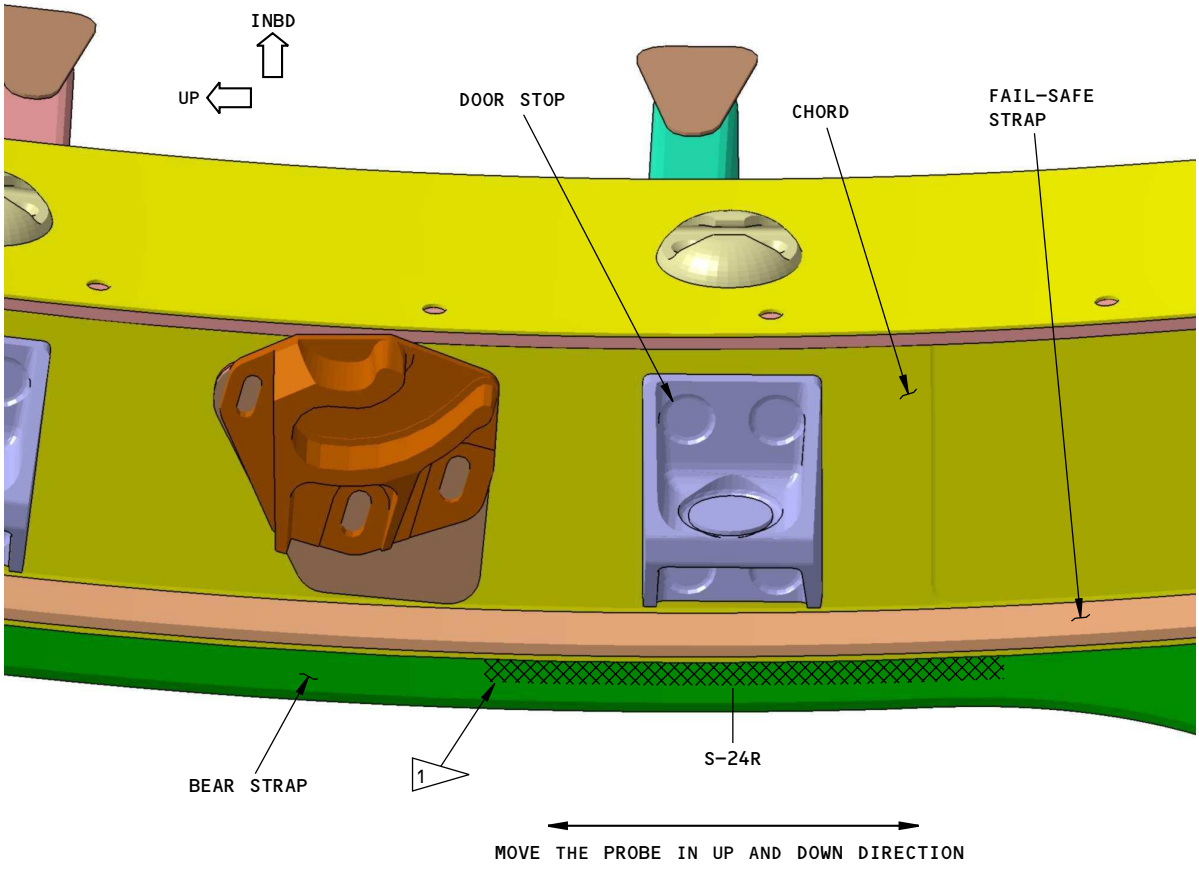

A

THE AFT CHORD IS SHOWN AS YOU LOOK AFT AND OUTBOARD;
THE FORWARD CHORD IS THE SAME BUT OPPOSITE

2161325 S0000472412_V1

Inspection Areas
Figure 1 (Sheet 2 of 2)

BOEING PROPRIETARY - Copyright © Unpublished Work - See title page for details

PART 6 - EDDY CURRENT

AFT BULKHEAD FRAME OF THE WHEEL WELL AT BS 727 (HFEC)

1. Purpose

A. Use this procedure to examine the frame web for cracks around the fasteners at STA 727, between stringers 9 and 10, on the left and right sides of the airplane. The inspection area is the frame web that is above the splice angle on the forward side of the frame. See Figure 1 for the inspection areas.

B. This procedure uses an impedance plane display instrument.

C. The frame web is aluminum.

D. 737-600/700/800/900 Damage Tolerance Rating (D626A001-DTR) Reference:

(1) Item: 53-40-16-6

2. Equipment

A. General

(1) Use inspection equipment that can be calibrated on the reference standard as specified in Part 6, 51-00-00, Procedure 23, paragraph 5.

(2) Refer to Part 1, 51-01-00, for data about the equipment manufacturers.

B. Instrument

(1) Use an instrument that:

(a) Operates at frequencies between 50 and 500 kHz.

(b) Has an impedance plane display.

(2) Refer to Part 6, 51-00-00, Procedure 23, paragraph 3.B, for examples of instruments that can be used to do this procedure.

C. Probe

(1) Use a probe that:

(a) Operates at frequencies between 50 and 500 kHz.

(b) Has a diameter of 0.125 inch (3.18 mm).

(c) Is shielded.

(2) The probe that follows was used to help prepare this procedure.

(a) TPEN925-5; Techna NDT

D. Reference Standard

(1) Use reference standard 188A, or an equivalent, as given in Part 6, 51-00-00, Procedure 23, paragraph 3.D.

3. Prepare for the Inspection

A. Identify and get access to the inspection areas shown in Figure 1.

B. Clean the inspection surfaces.

(1) Remove dirt or grease from the inspection surfaces.

(2) Remove paint only if it is loose.

BOEING PROPRIETARY - Copyright © Unpublished Work - See title page for details

(3) Remove sealant from the areas that the probe will touch.

4. Instrument Calibration

A. Calibrate the instrument as specified in Part 6, 51-00-00, Procedure 23, paragraph 5.

(1) Use reference standard 188A, or an equivalent, as specified in Part 6, 51-00-00, Procedure 23, paragraph 5.

5. Inspection Procedure

A. Get access to the inspection area shown in Figure 1.

B. Examine the frame web for cracks at the fastener locations shown in Figure 1 as specified in Part 6, 51-00-00, Procedure 23, paragraph 6 and the steps that follow:

(1) Examine around the fasteners. Use the fastener head or washer as a probe guide.

(2) Frequently do a check of the instrument calibration as specified in Part 6, 51-00-00, Procedure 23, paragraph 6.E.(5).

C. Do Paragraph 5.A. and Paragraph 5.B. again for the frame web on the other side of the airplane.

6. Inspection Results

A. Refer to Part 6, 51-00-00, Procedure 23, paragraph 7, for instructions to help make an analysis of the indications that occur during the inspection.

BOEING PROPRIETARY - Copyright © Unpublished Work - See title page for details

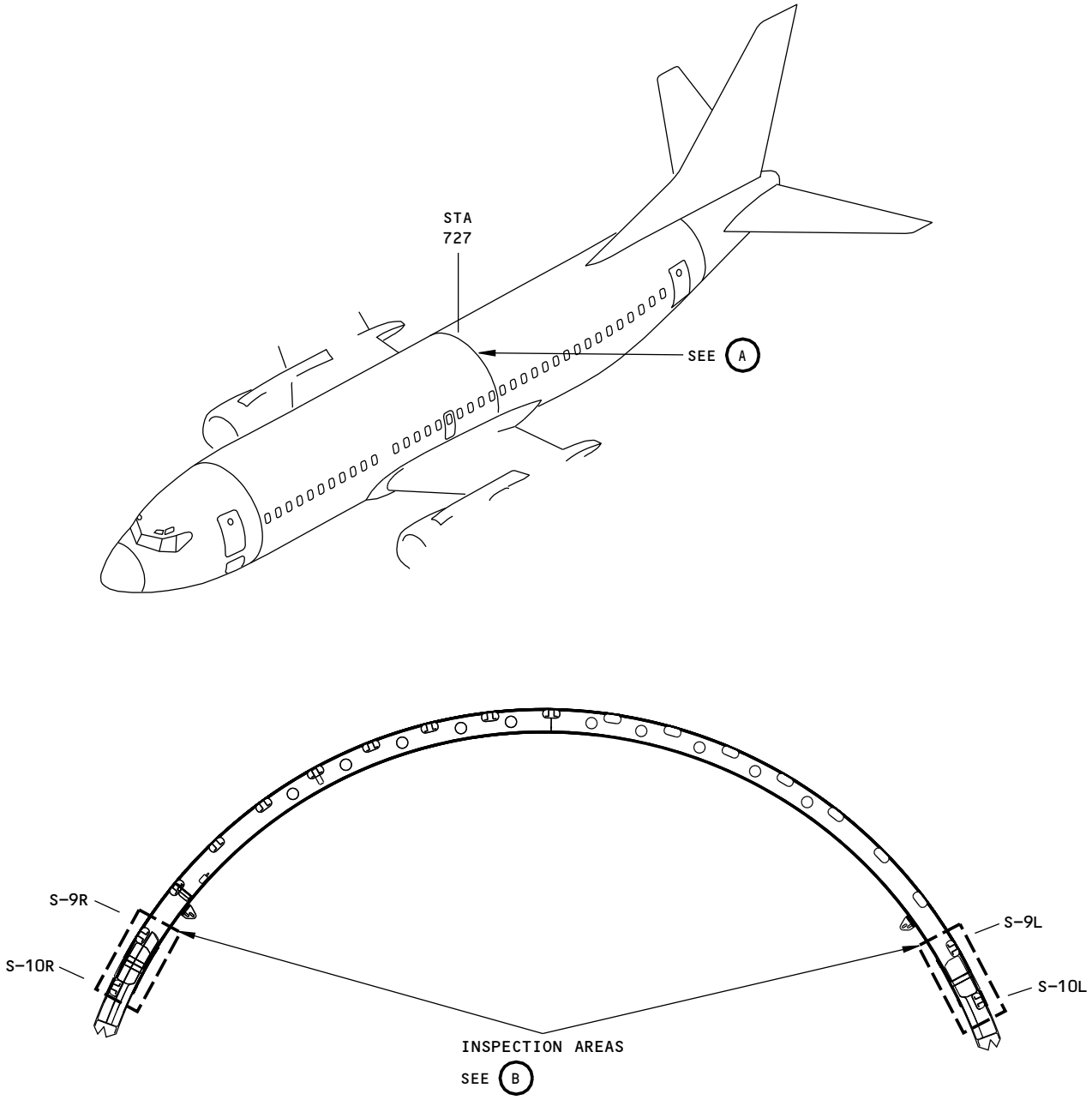

WHEEL WELL AFT BULKHEAD FRAME AT BS 727
(VIEW AS YOU LOOK AFT)

A

2161326 S0000472414_V1

Inspection Area
Figure 1 (Sheet 1 of 2)

BOEING PROPRIETARY - Copyright © Unpublished Work - See title page for details

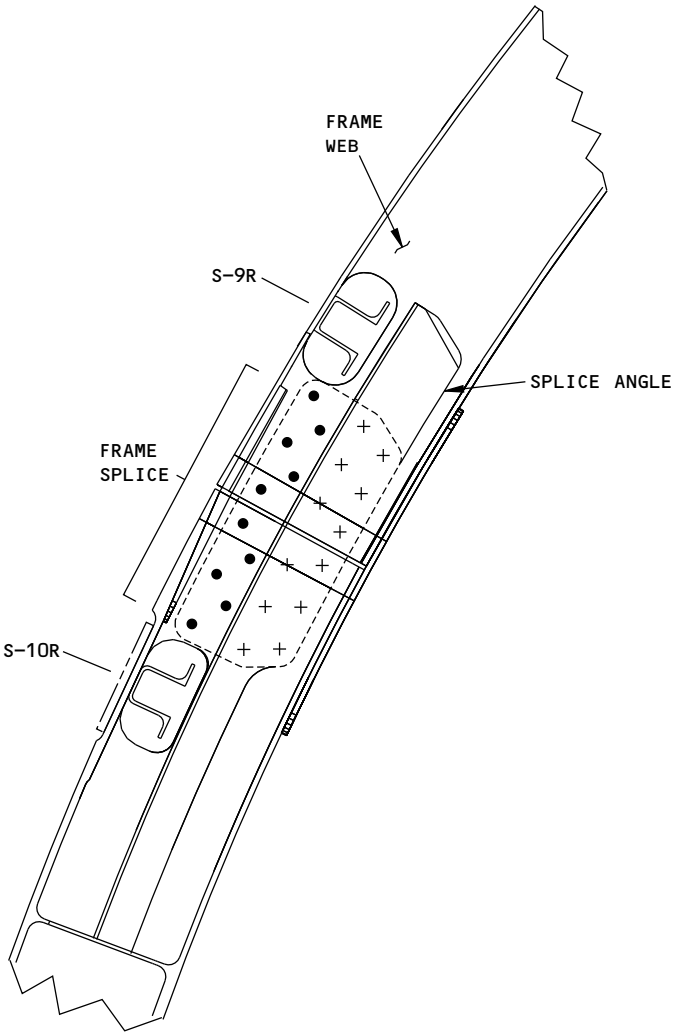

FRAME WEB AND SPLICE AT BS 727 BETWEEN S-9 AND S-10
(VIEW AS YOU LOOK AFT)

B

NOTES:

- THE RIGHT SIDE IS SHOWN; THE LEFT SIDE IS OPPOSITE.
- ● FASTENER LOCATIONS TO BE EXAMINED.

2161329 S0000472415_V1

Inspection Area
Figure 1 (Sheet 2 of 2)

BOEING PROPRIETARY - Copyright © Unpublished Work - See title page for details

PART 6 - EDDY CURRENT

AFT BULKHEAD CHORD OF THE WHEEL WELL AT BS 727 (HFEC)

1. Purpose

A. Use this procedure to examine the bulkhead chord for cracks that can occur at STA 727, between stringers S-21 and S-27, on the left and right sides of the airplane. The inspection area is the forward surface of the chord that you can get access to, between the web and the skin. See Figure 1 for the inspection areas.

B. This procedure uses an impedance plane display instrument.

C. The bulkhead chord is aluminum.

D. 737-600/700/800/900 Damage Tolerance Rating (D626A001-DTR) Reference:

(1) Item: 53-40-16-1a

(2) Item: 53-40-16-1b

2. Equipment

A. General

(1) Use inspection equipment that can be calibrated on the reference standard as specified in Part 6, 51-00-00, Procedure 23, paragraph 5.

(2) Refer to Part 1, 51-01-00, for data about the equipment manufacturers.

B. Instrument

(1) Use an instrument that:

(a) Operates at frequencies between 50 and 500 kHz.

(b) Has an impedance plane display.

(2) Refer to Part 6, 51-00-00, Procedure 23, paragraph 3.B, for examples of instruments that can be used to do this procedure.

C. Probe

(1) Use a probe that:

(a) Operates at frequencies between 50 and 500 kHz.

(b) Has a diameter of 0.125 inch (3.18 mm).

(c) Is shielded.

(2) The probe that follows was used to help prepare this procedure.

(a) TPEN925-5; Techna NDT

D. Reference Standard

(1) Use reference standard 126, or an equivalent, as given in Part 6, 51-00-00, Procedure 23, paragraph 3.D.

3. Prepare for the Inspection

A. Identify and get access to the inspection area shown in Figure 1.

B. Clean the inspection surfaces.

(1) Remove dirt or grease from the inspection surfaces.

BOEING PROPRIETARY - Copyright © Unpublished Work - See title page for details

(2) Remove paint only if it is loose.

(3) Remove sealant from the areas that the probe will touch.

4. Instrument Calibration

A. Calibrate the instrument as specified in Part 6, 51-00-00, Procedure 23, paragraph 5.

(1) Use reference standard 126, or an equivalent, as specified in Part 6, 51-00-00, Procedure 23, paragraph 5.

5. Inspection Procedure

A. Get access to the inspection area shown in Figure 1.

B. Examine the bulkhead chord for cracks as specified in Part 6, 51-00-00, Procedure 23, paragraph 6, and the steps that follow:

(1) Examine the upper edge of the bulkhead chord. Use the edge of the web as a probe guide.

(2) Examine the lower edge of the bulkhead chord. Use a nonconductive straightedge to keep the probe the same distance from the edge of chord.

(3) Frequently, do a check of the instrument calibration as specified in Part 6, 51-00-00, Procedure 23, paragraph 6.E.(5).

C. Do Paragraph 5.A. and Paragraph 5.B. again to examine the bulkhead chord on the other side of the airplane.

6. Inspection Results

A. Refer to Part 6, 51-00-00, Procedure 23, paragraph 7, for instructions to help make an analysis of the indications that occur during the inspection.

BOEING PROPRIETARY - Copyright © Unpublished Work - See title page for details

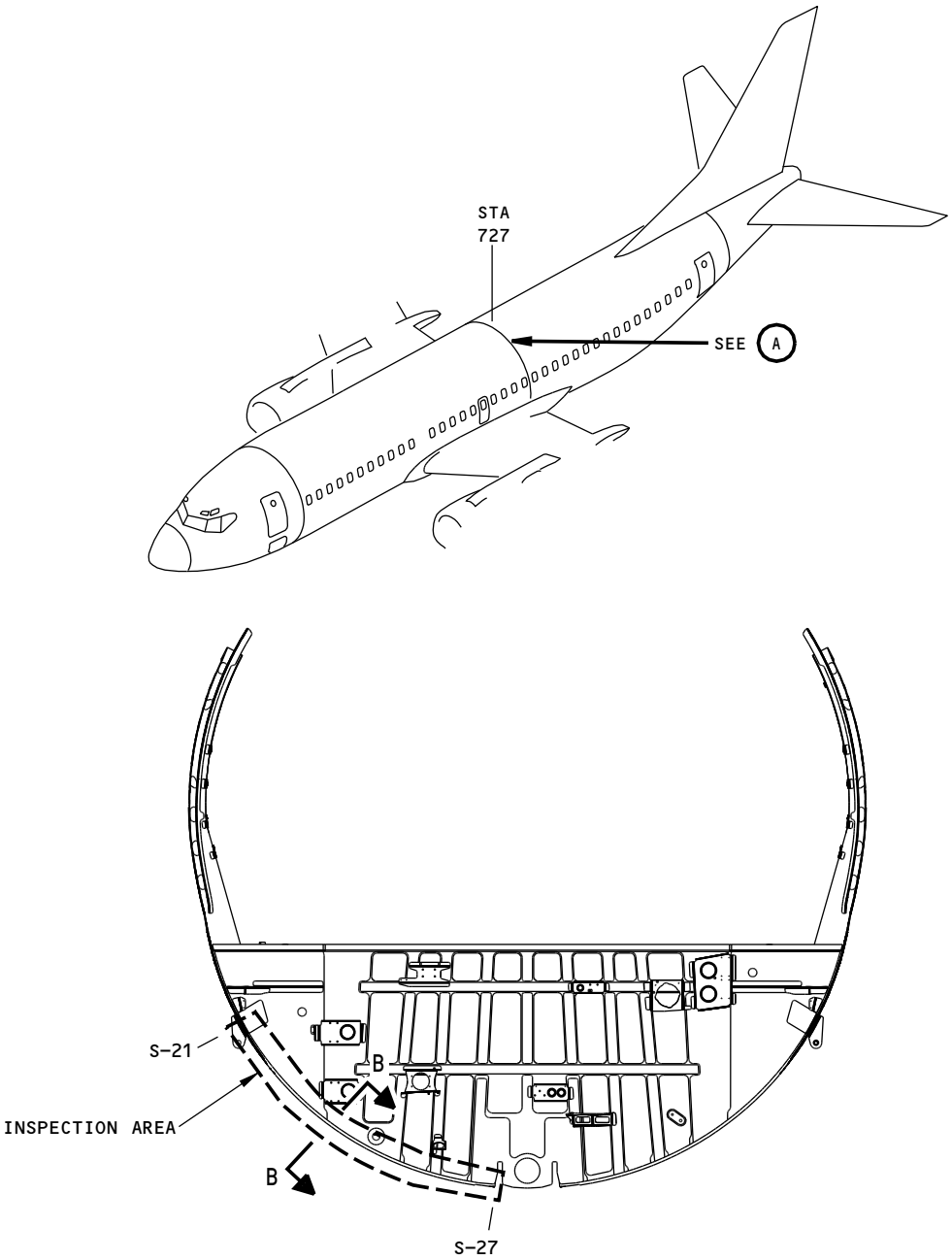

AFT BULKHEAD FRAME OF THE WHEEL WELL AT BS 727
(VIEW AS YOU LOOK AFT)

A

NOTES:

- THE RIGHT SIDE IS SHOWN; THE LEFT SIDE IS OPPOSITE.

2161331 S0000472418_V1

Inspection Area
Figure 1 (Sheet 1 of 2)

BOEING PROPRIETARY - Copyright © Unpublished Work - See title page for details

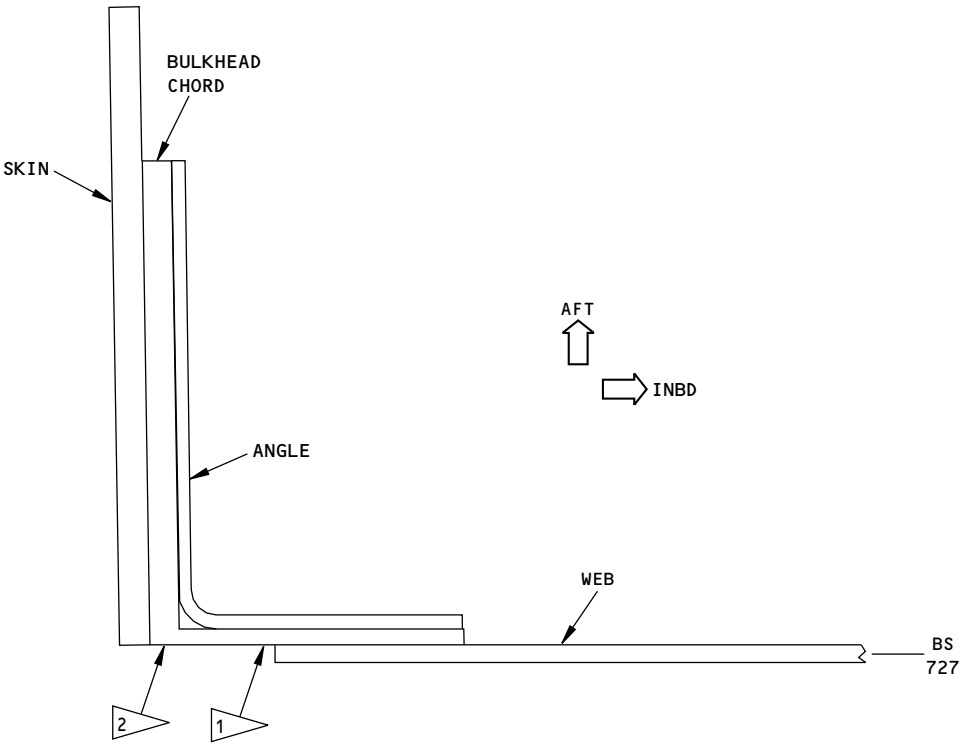

B–B

NOTES:

1 USE A HIGH FREQUENCY EDDY CURRENT PROBE TO EXAMINE THE UPPER EDGE OF THE BULKHEAD CHORD. USE THE WEB AS A PROBE GUIDE.

2 USE A HIGH FREQUENCY EDDY CURRENT PROBE TO EXAMINE THE LOWER EDGE OF THE BULKHEAD CHORD. USE A STRAIGHTEDGE, IF NECESSARY, TO KEEP THE PROBE COIL A CONSTANT DISTANCE FROM THE EDGE OF THE CHORD.

2161333 S0000472419_V1

Inspection Area
Figure 1 (Sheet 2 of 2)

BOEING PROPRIETARY - Copyright © Unpublished Work - See title page for details

PART 6 - EDDY CURRENT

STA 1042 BULKHEAD LUGS, LINKS AND FITTINGS (HFEC)

1. **Purpose**
   - A. Use this high frequency eddy current (HFEC) procedure to examine the end beam lugs for cracks at the STA 1042 pressure bulkhead. See Figure 1 for the inspection areas.
   - B. This procedure uses an impedance plane display instrument.
   - C. The end beam lugs are titanium (low conductivity).
   - D. 737 Maintenance Planning Data (MPD) Damage Tolerance Rating (DTR) Check Form Reference:
     - (1) Item: 53-80-15-2a
     - (2) Item: 53-80-15-2b
2. **Equipment**
   - A. General
     - (1) Use inspection equipment that can be calibrated on the reference standard as specified in Part 6, 51-00-00, Procedure 14, paragraph 5.
     - (2) Refer to Part 1, 51-01-00, for data about the equipment manufacturers.
   - B. Instrument
     - (1) Use an eddy current instrument that:
       - (a) Has an impedance plane display.
       - (b) Operates from 1 to 3 MHz.
     - (2) The instruments that follow were used to help prepare this procedure.
       - (a) Phasec 2D; GE Inspection Technologies
       - (b) Phasec 3D; GE Inspection Technologies
   - C. Probes
     - (1) Use a probe that:
       - (a) Operates from 1 to 3 MHz.
       - (b) Has a maximum diameter of 0.25 inch (6.4 mm).
       - (c) Has a 90 degree angle with a minimum drop of 0.125 inch (3.175 mm).
     - (2) The probes that follow were used to help prepare this procedure.

       NOTE: Shielded probes are recommended.
       - (a) TEK-2096; Techna NDT
       - (b) MTF902-50B/2M; NDT Engineering Corporation
   - D. Reference Standards
     - (1) Use reference standard 1002, or an equivalent, as shown in Part 6, 51-00-00, Procedure 14, to help calibrate the instrument.
3. **Prepare for the Inspection**
   - A. Identify and get access to all of the inspection areas shown in Figure 1.

BOEING PROPRIETARY - Copyright © Unpublished Work - See title page for details

B. Clean the inspection surfaces.

(1) Remove dirt or grease from the inspection surfaces.

(2) Remove paint only if it is loose.

4. Instrument Calibration

A. Calibrate the instrument to examine the end beam lugs as specified in Part 6, 51-00-00, Procedure 14, paragraph 5.

(1) Use reference standard 1002, or an equivalent, to help calibrate the instrument.

B. Use probe TEK-2096 or a flexible probe bent to the configuration shown in Figure 2 to examine the lugs at WL 223.

C. Use a standard probe that meets the requirements in Paragraph 2.C.(1) to examine the lugs at RBL 10 and 23; LBL 10 and 23; and WL 256, 269, and 282.

5. Inspection Procedure

A. Examine the end beam lugs for cracks as specified in Part 6, 51-00-00, Procedure 14, paragraph 6. Examine the areas that follow:

(1) Examine the edge of the lug between the clamshell surfaces from the aft side of the aft pressure bulkhead. See Figure 1.

(2) It is necessary to make two scans on each lug edge. Use the clamshell fittings or a nonconductive straightedge as a probe guide to examine the full width of each lug edge.

(a) Examine the lugs at WL 223 from the forward side of the end beam. See Figure 1, View B. Two lugs are examined.

(b) Examine the aft side of the lugs at RBL 10 and 23; LBL 10 and 23; and WL 256, 269, and 282. See Figure 1, View C. 14 lugs are examined.

6. Inspection Results

A. Refer to Part 6, 51-00-00, Procedure 14, paragraph 7, for instructions to help make an analysis of the indications that occur during the inspection.

BOEING PROPRIETARY - Copyright © Unpublished Work - See title page for details

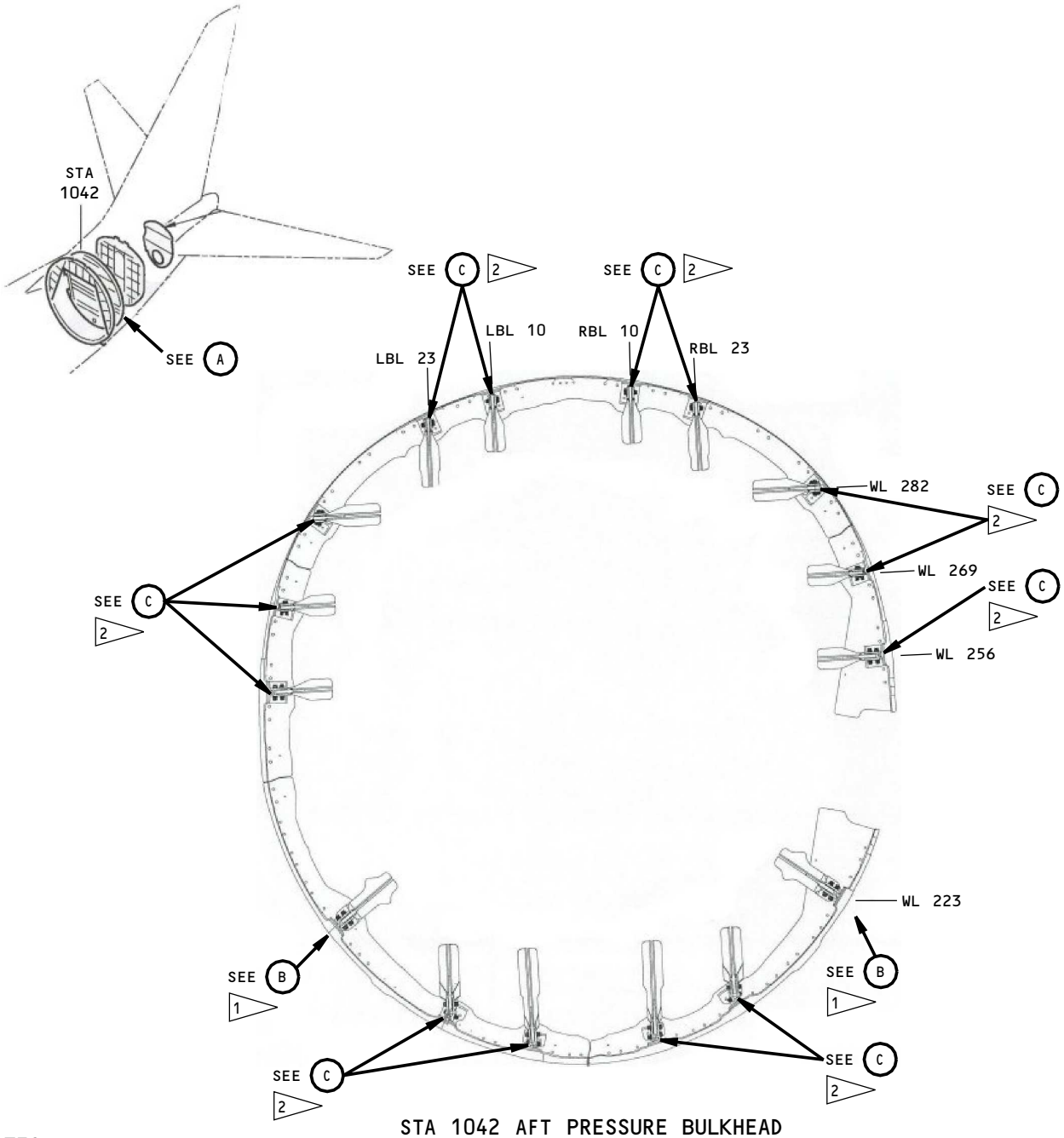

STA 1042 AFT PRESSURE BULKHEAD
END LUG LOCATIONS
(VIEW FROM THE AFT SIDE)

A

NOTES:

1 THE INSPECTION AREA FOR B IS ON THE FORWARD SIDE OF THE END BEAM FITTING.

2 THE INSPECTION AREA FOR C IS ON THE AFT SIDE OF THE END BEAM FITTING.

2161335 S0000474566_V1

Inspection Areas
Figure 1 (Sheet 1 of 2)

BOEING PROPRIETARY - Copyright © Unpublished Work - See title page for details

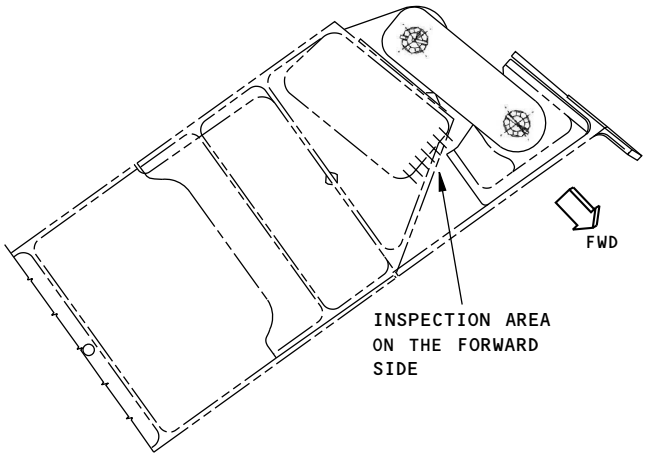

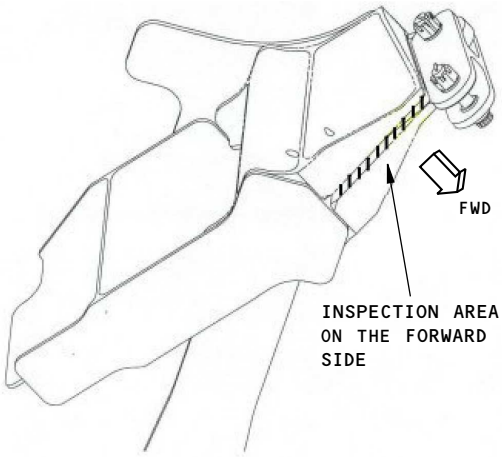

B 1

FORWARD SIDE CONFIGURATION
(TYPICAL)

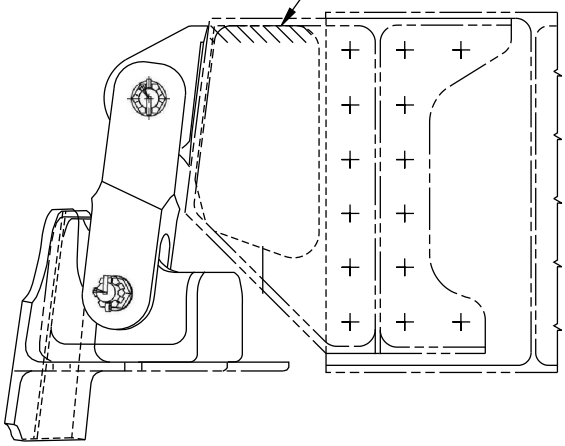

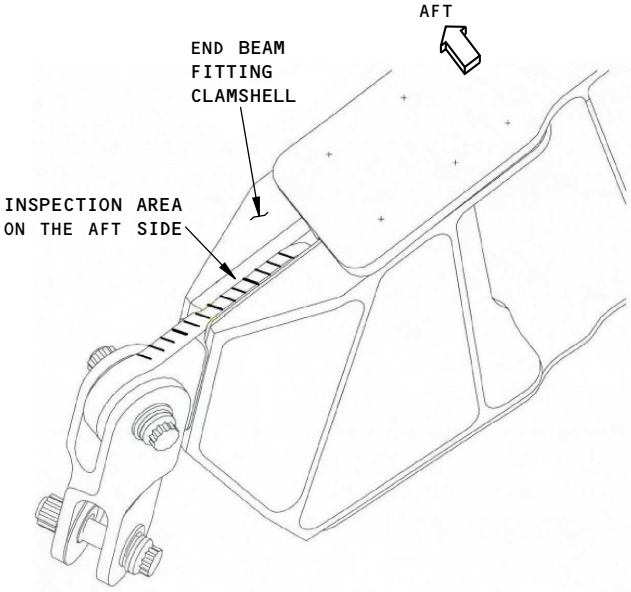

AFT SIDE CONFIGURATION
(TYPICAL)

C 2

2161336 S0000474567_V1

Inspection Areas
Figure 1 (Sheet 2 of 2)

BOEING PROPRIETARY - Copyright © Unpublished Work - See title page for details

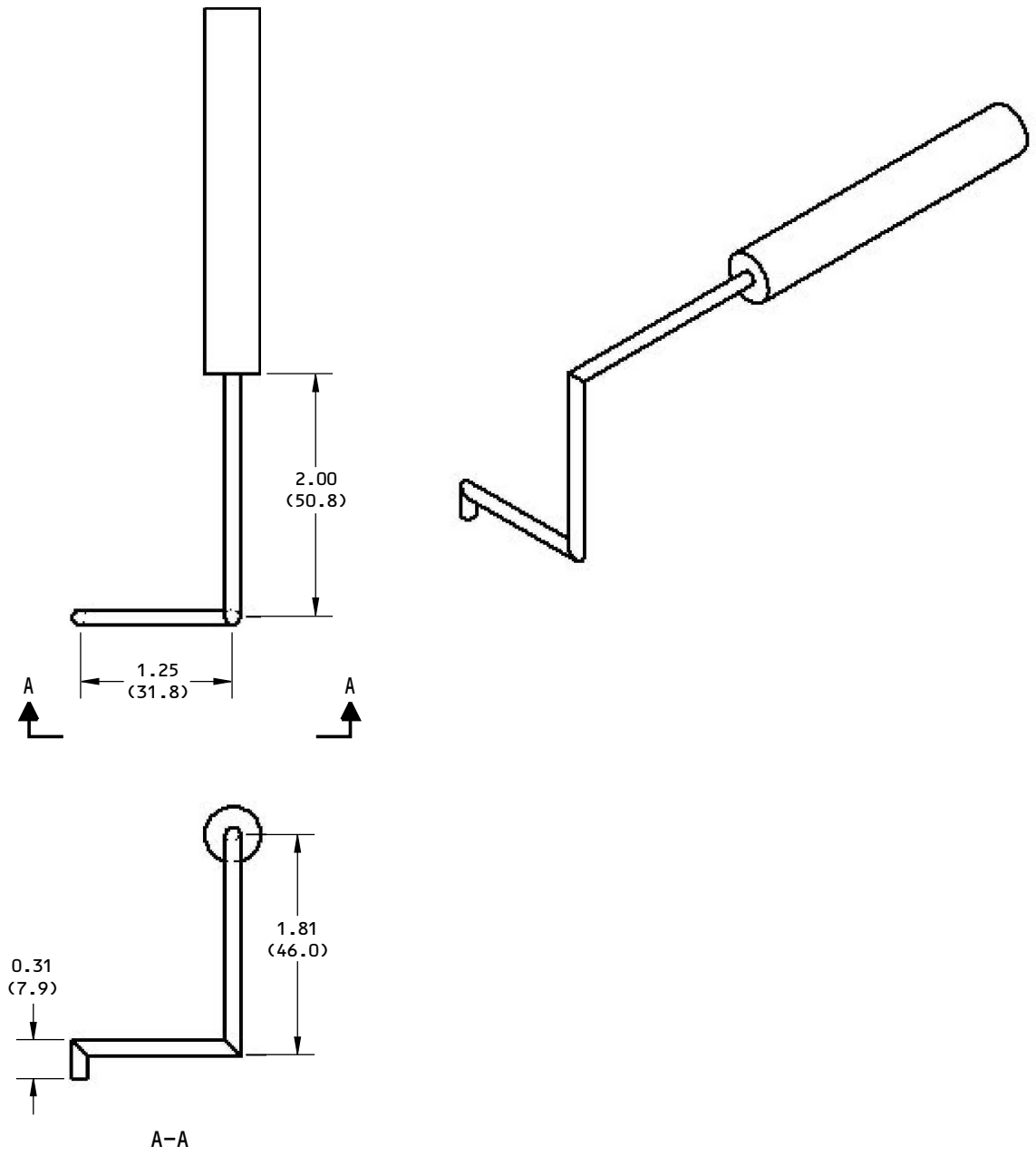

NOTES:

- USE PROBE TEK-2096 OR A FLEXIBLE PROBE BENT TO THE CONFIGURATION SHOWN TO EXAMINE THE LUGS AT WL 223.

2161337 S0000474569_V1

Probe Configuration
Figure 2

BOEING PROPRIETARY - Copyright © Unpublished Work - See title page for details

PART 6 - EDDY CURRENT

JACKSCREW FITTING ASSEMBLY AT THE STA 1088 BULKHEAD

1. Purpose

A. Use this procedure to examine the jackscrew fitting assembly for cracks at the STA 1088 bulkhead. See Figure 1 for the inspection areas.

B. This procedure uses an impedance plane display instrument.

C. The part of the jackscrew fitting assembly that is examined with this procedure is made from aluminum.

D. 737 Damage Tolerance Rating (D626A001-DTR) Reference:

(1) Item: 53-80-05-1

2. Equipment

A. General

(1) Use inspection equipment that can be calibrated on the reference standard as specified in Part 6, 51-00-00, Procedure 23, paragraph 5.

(2) Refer to Part 1, 51-01-00, for data about the equipment manufacturers.

B. Instrument

(1) Use an instrument that:

(a) Operates at frequencies between 50 and 500 kHz.

(b) Has an impedance plane display.

(2) Refer to Part 6, 51-00-00, Procedure 23, paragraph 3.B, for the instrument data.

C. Probe

(1) Use a probe that:

(a) Operates at frequencies between 50 and 500 kHz.

(b) Has a diameter of 0.125 inch (3.18 mm).

(c) Is shielded.

(2) The probe that follows was used to help prepare this procedure.

(a) TPEN925-5; Techna NDT

D. Reference Standard

(1) Use reference standard 188A as specified in Part 6, 51-00-00, Procedure 23, paragraph 3.D.

3. Prepare for the Inspection

A. Identify and get access to the inspection area. See Figure 1.

B. Remove access panel 148A6110-1.

C. Remove the jackscrew from the jackscrew fitting assembly for better access.

D. Clean the inspection surfaces.

(1) Remove dirt or grease from the inspection surfaces.

(2) Remove paint only if it is loose.

BOEING PROPRIETARY - Copyright © Unpublished Work - See title page for details

(3) Remove sealant from the areas that the probe will touch.

E. Refer to Part 6, 51-00-00, Procedure 23, paragraph 4 for more instructions on how to prepare for this inspection.

4. Instrument Calibration

A. Calibrate the instrument as specified in Part 6, 51-00-00, Procedure 23, paragraph 5.

(1) Use reference standard 188A, or an equivalent, as specified in Part 6, 51-00-00, Procedure 23, paragraph 5.

5. Inspection Procedure

A. Get access to the inspection areas as shown in Figure 1.

B. Examine the jackscrew fitting assembly as specified in Part 6, 51-00-00, Procedure 23, paragraph 6, and the steps that follow:

(1) Use the bushing as a probe guide as you make a scan around the lug hole (see Figure 1, flagnote 2).

C. Do a check of the instrument calibration as specified in Part 6, 51-00-00, Procedure 23, paragraph 6.E.(5).

D. Do Paragraph 5.B. and Paragraph 5.C. again on the other side of the lug.

E. Do Paragraph 5.B. thru Paragraph 5.D. for the other lug.

6. Inspection Results

A. Refer to Part 6, 51-00-00, Procedure 23, paragraph 7, for instructions to help make an analysis of the indications that occur during the inspection.

BOEING PROPRIETARY - Copyright © Unpublished Work - See title page for details

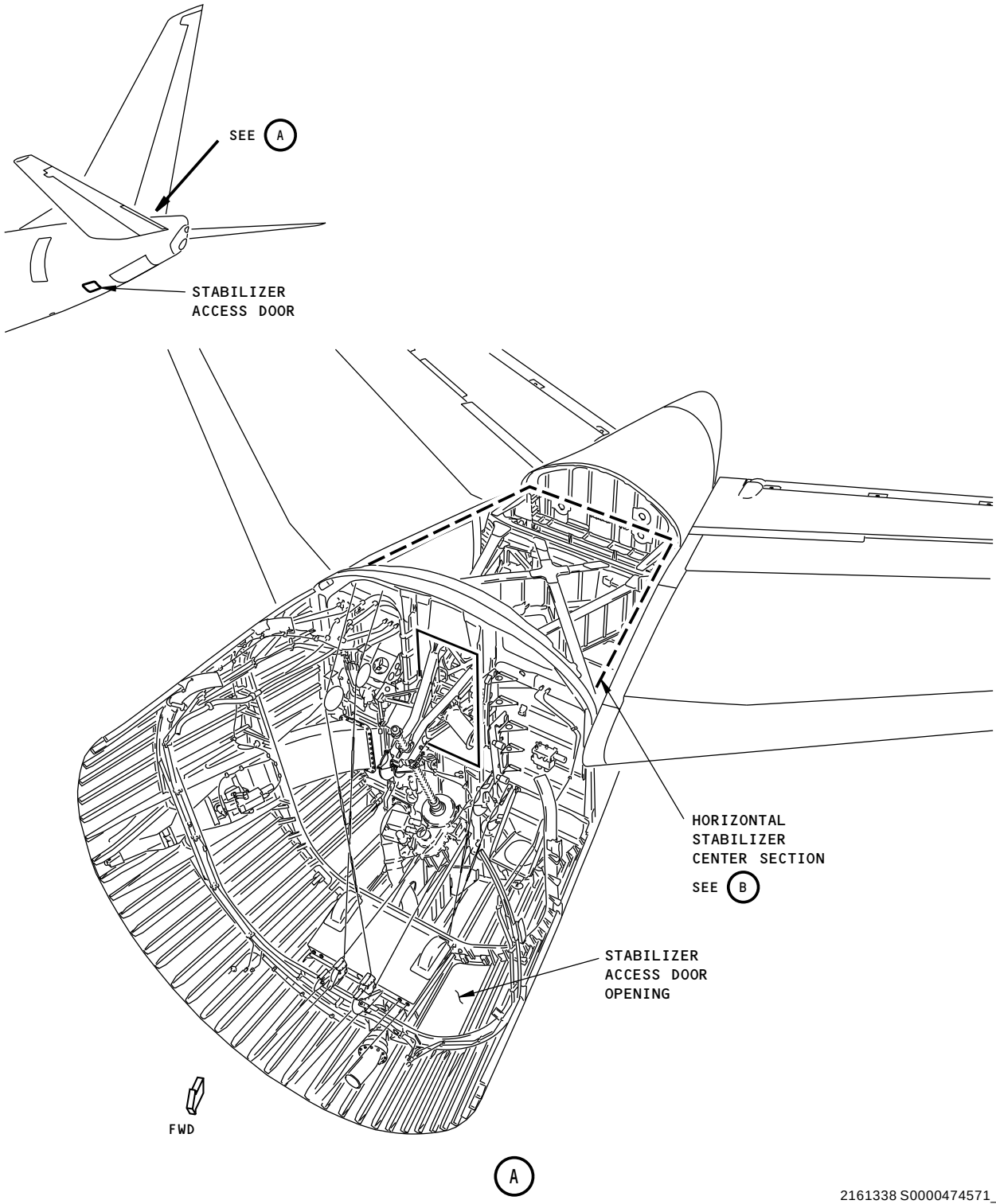

2161338 S0000474571_V1

Inspection Area
Figure 1 (Sheet 1 of 3)

BOEING PROPRIETARY - Copyright © Unpublished Work - See title page for details

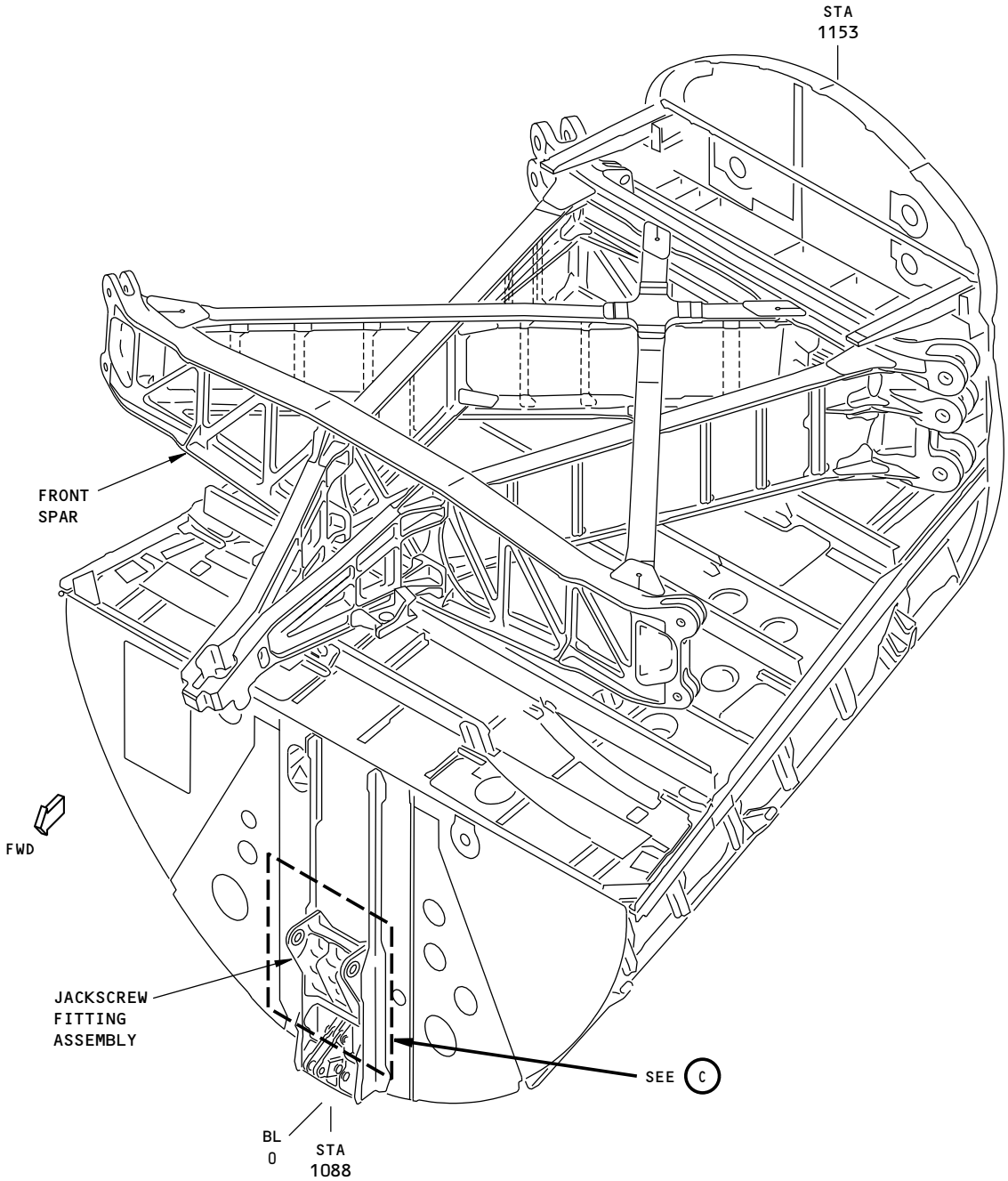

HORIZONTAL STABILIZER CENTER SECTION

B

2161339 S0000474572_V1

Inspection Area
Figure 1 (Sheet 2 of 3)

BOEING PROPRIETARY - Copyright © Unpublished Work - See title page for details

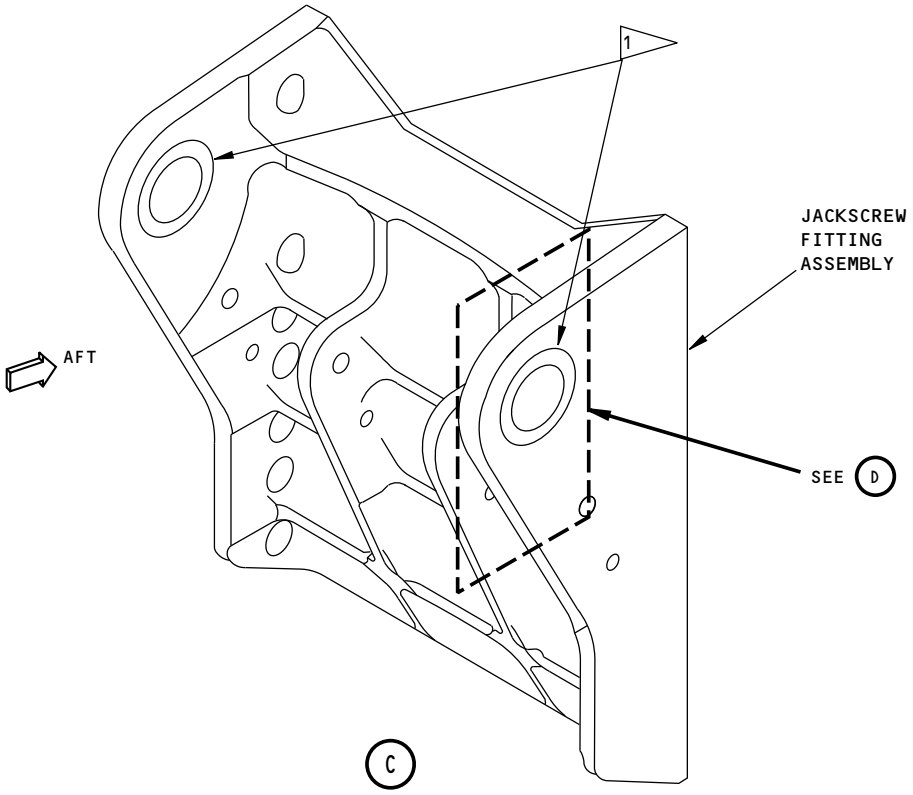

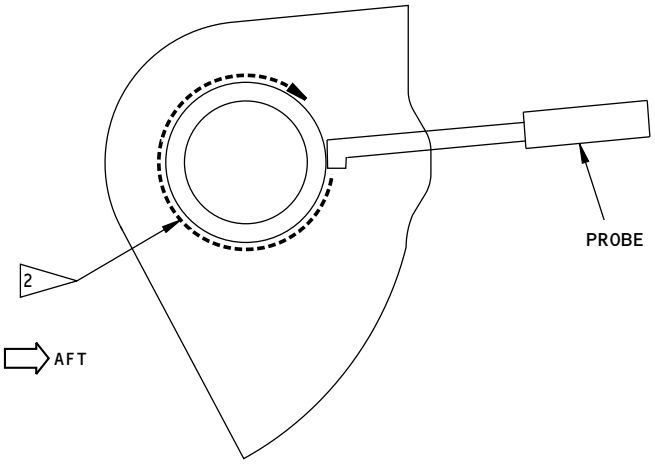

VIEW AS YOU LOOK INBOARD

D

NOTES:

1 EXAMINE THE INBOARD AND OUTBOARD SURFACES OF THE LEFT AND RIGHT LUGS FOR CRACKS.

2 MAKE A 360 DEGREE SCAN AROUND THE HOLE AT THE EDGE OF THE BUSHING AS SHOWN. USE THE BUSHING AS A PROBE GUIDE.

2161342 S0000474573_V1

Inspection Area
Figure 1 (Sheet 3 of 3)

BOEING PROPRIETARY - Copyright © Unpublished Work - See title page for details

PART 6 - EDDY CURRENT

FORWARD PANEL OF THE APU INLET ENCLOSURE

1. **Purpose**
   A. Use this procedure to help find surface cracks in the forward panel of the APU inlet enclosure. See Figure 1 for the inspection area.
   B. 737 Damage Tolerance Rating (D626A001-DTR) Reference:
      (1) Item: 53-80-17-2
2. **Equipment**
   A. General
      (1) All eddy current instruments that have an impedance plane display are permitted for use if they can be calibrated on the reference standard as specified in Paragraph 4.
      (2) Refer to Part 1, 51-01-00, for data about the equipment manufacturers.
   B. Instrument
      (1) Use an eddy current instrument that:
         (a) Has an impedance plane display.
         (b) Operates at a frequency range of 50 to 500 kHz.
      (2) The instrument that follows was used to help prepare this procedure.
         (a) Nortec 500; Olympus NDT
   C. Probe
      (1) Use a straight or right-angle shielded probe with a maximum diameter of 0.2 inch (5 mm). Refer to Part 6, 51-00-00, Procedure 23, paragraph 3.C, for data about probe selection.
      (2) The probe that follows was used to help prepare this procedure.
         (a) MP-50; NDT Engineering Corp. (Olympus)
   D. Reference Standards
      (1) Use reference standard 188A, or an equivalent, as given in Part 6, 51-00-00, Procedure 23, paragraph 3.D.
3. **Prepare for the Inspection**
   A. Get access to the inspection area shown in Figure 1.
   B. Remove loose paint, dirt and sealant from the surface of the inspection areas as necessary.
4. **Instrument Calibration**
   A. Calibrate the equipment as specified in the calibration instructions of Part 6, 51-00-00, Procedure 23, paragraph 5, and as follows:
      (1) Use reference standard 188A or an equivalent.
      (2) Calibrate on the button-head rivet.
5. **Inspection Procedure**
   A. Examine the forward panel of the APU inlet enclosure for cracks as follows:

BOEING PROPRIETARY - Copyright © Unpublished Work - See title page for details

(1) Find the inspection area shown in Figure 1.

(2) Calibrate the instrument as specified in Paragraph 4.

(3) Make a scan around each of the 28 fasteners on the forward panel of the APU inlet enclosure as specified in Part 6, 51-00-00, Procedure 23, paragraph 6. Move the probe in a full circle around each fastener.

6. Inspection Results

A. See Part 6, 51-00-00, Procedure 23, paragraph 7, for instructions to help make an analysis of signals that occur during the inspection.

BOEING PROPRIETARY - Copyright © Unpublished Work - See title page for details

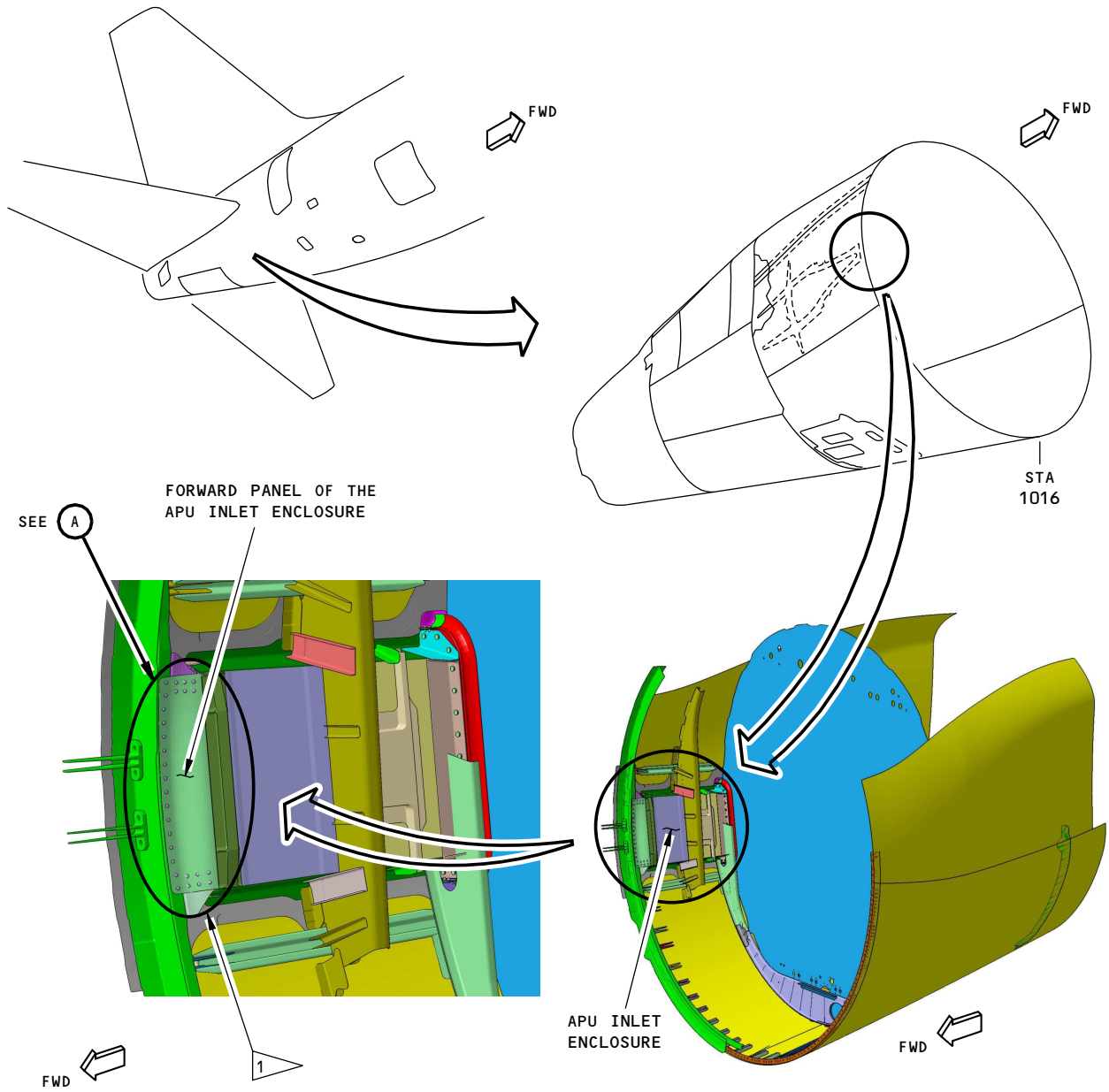

NOTES:

- EXAMINE THE FORWARD PANEL OF THE APU INLET ENCLOSURE FOR CRACKS. MOVE THE PROBE AROUND EACH FASTENER.

1 DTR CHECK FORM ITEM 53-80-17-2 INSPECTION AREA

2161343 S0000474575_V1

Inspection Area
Figure 1 (Sheet 1 of 2)

BOEING PROPRIETARY - Copyright © Unpublished Work - See title page for details

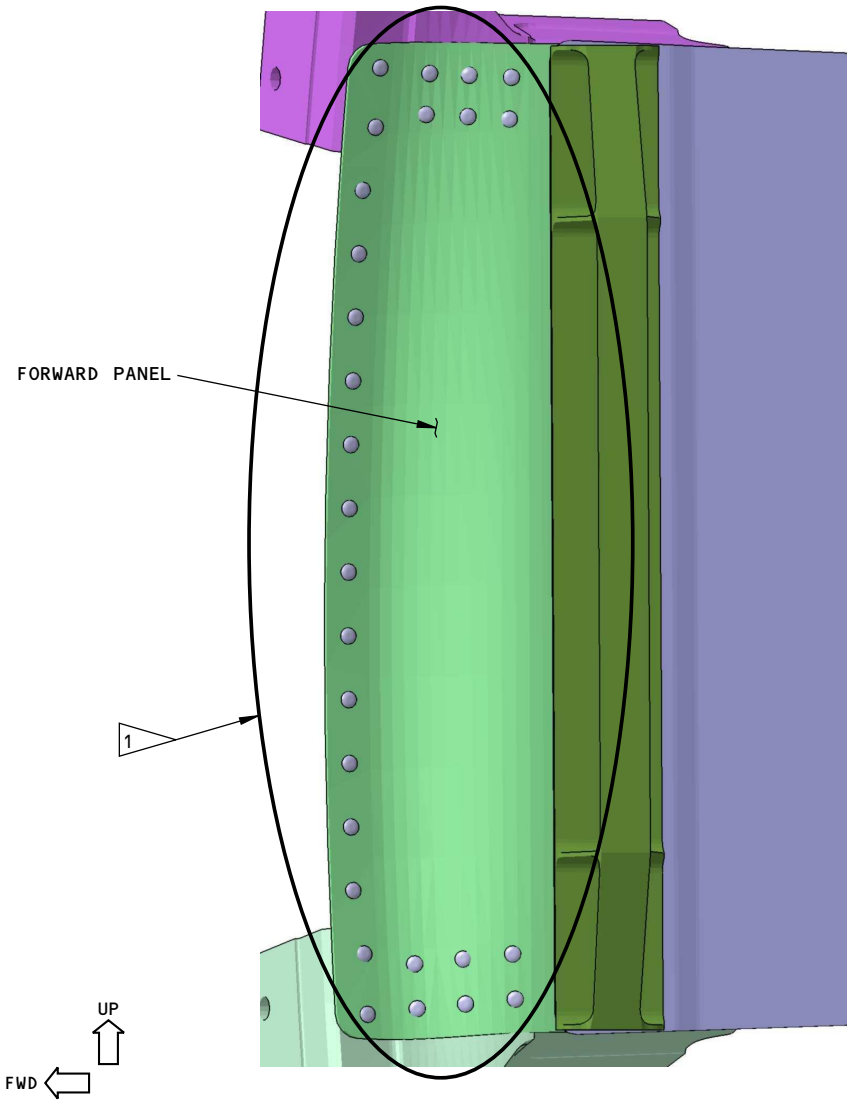

FORWARD PANEL OF THE
APU INLET ENCLOSURE

A

NOTES:

- EXAMINE THE FORWARD PANEL OF THE APU INLET ENCLOSURE FOR CRACKS AT THE 28 FASTENER LOCATIONS. MOVE THE PROBE AROUND EACH FASTENER.

2161344 S0000474576_V1

Inspection Area
Figure 1 (Sheet 2 of 2)

BOEING PROPRIETARY - Copyright © Unpublished Work - See title page for details

PART 6 - EDDY CURRENT

BULKHEAD BS 1016 - PRESSURE BULKHEAD WEBS AT TEAR STRAPS

1. Purpose

A. Use this high frequency eddy current (HFEC) procedure to examine the forward side of the pressure bulkhead at BS1016 for cracks. The inspection area is the pressure bulkhead web at the tear straps. See Figure 1 for the inspection areas.

B. This procedure uses an impedance plane display instrument.

C. The bulkhead web is aluminum.

D. 737-600/700/800/900 Damage Tolerance Rating (D626A001-DTR) Reference:

(1) Item: 53-80-01-8

2. Equipment

A. General

(1) Use inspection equipment that can be calibrated on the reference standard as specified in Part 6, 51-00-00, Procedure 23, paragraph 5.

(2) Refer to Part 1, 51-01-00, for data about the equipment manufacturers.

B. Instrument

(1) Use an eddy current instrument that:

(a) Has an impedance plane display.

(b) Operates from 50 to 500 kHz.

(c) Refer to Part 6, 51-00-00, Procedure 23, paragraph 3.B, for the instrument data.

(2) The instrument that follows was used to help prepare this procedure.

(a) Phasec 2D/3D; made by GE Inspection Technologies

C. Probes

(1) Use a probe that operates from 50 to 500 kHz.

NOTE: Shielded probes are recommended.

(2) The probe that follows was used to help prepare this procedure.

(a) TPEN92-5B; made by Techna NDT

D. Reference Standard

(1) To examine the pressure bulkhead web at the tear straps, use reference standard 188A, or an equivalent, as shown in Part 6, 51-00-00, Procedure 23.

3. Prepare for the Inspection

A. Identify and get access to all of the inspection areas shown in Figure 1.

B. Clean the inspection surfaces.

(1) Remove dirt or grease from the inspection surfaces.

(2) Remove paint only if it is loose.

BOEING PROPRIETARY - Copyright © Unpublished Work - See title page for details

C. Refer to for Part 6, 51-00-00, Procedure 23, paragraph 4, for more instructions on how to prepare for this inspection.

4. Calibrate the Instrument

A. Calibrate the instrument as specified in Part 6, 51-00-00, Procedure 23, paragraph 5, to examine the web of the pressure bulkhead for cracks at the tear straps (see Figure 1).

(1) Use reference standard 188A to calibrate the instrument.

5. Inspection Procedure

A. Get access to the inspection area shown in Figure 1.

B. Examine the web of the pressure bulkhead for cracks at the tear straps as specified in Part 6, 51-00-00, Procedure 23, paragraph 6. Use the head of the fasteners as a probe guide to examine all of the fastener locations that go through the tear strap and the bulkhead web. See Figure 1.

C. Do a check of the instrument calibration as specified in Part 6, 51-00-00, Procedure 23, paragraph 6.E.(5).

6. Inspection Results

A. Refer to Part 6, 51-00-00, Procedure 23, paragraph 7, for instructions to help make an analysis of the indications that occur during the inspection.

BOEING PROPRIETARY - Copyright © Unpublished Work - See title page for details

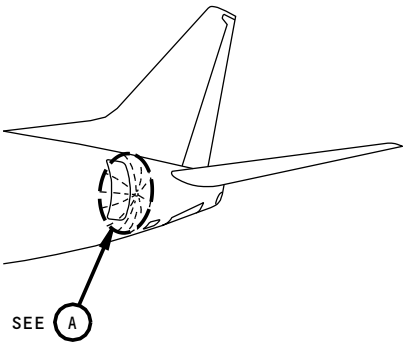

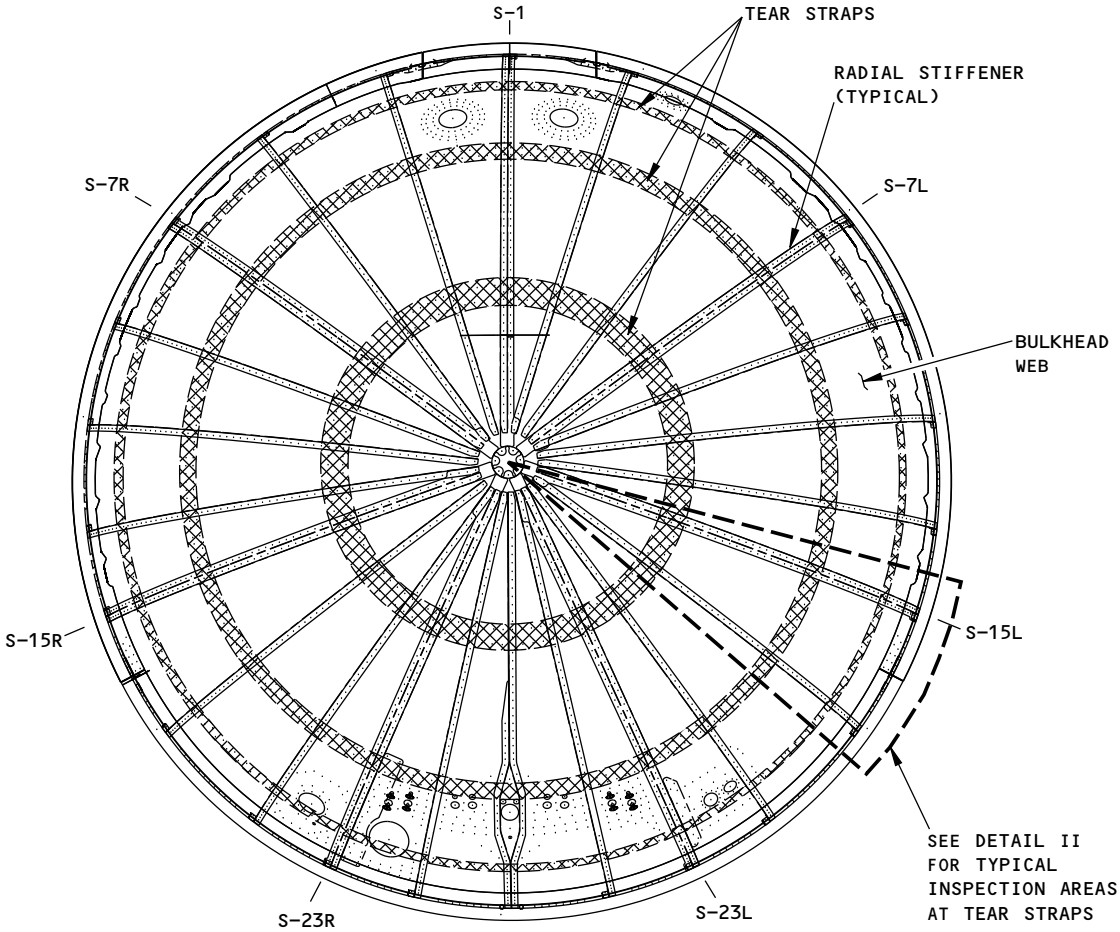

DETAIL I
BS 1016 PRESSURE BULKHEAD
(VIEW AS YOU LOOK AFT)

NOTE

INSPECTION AREAS

2216202 S0000494147_V1

Inspection Area
Figure 1 (Sheet 1 of 2)

BOEING PROPRIETARY - Copyright © Unpublished Work - See title page for details

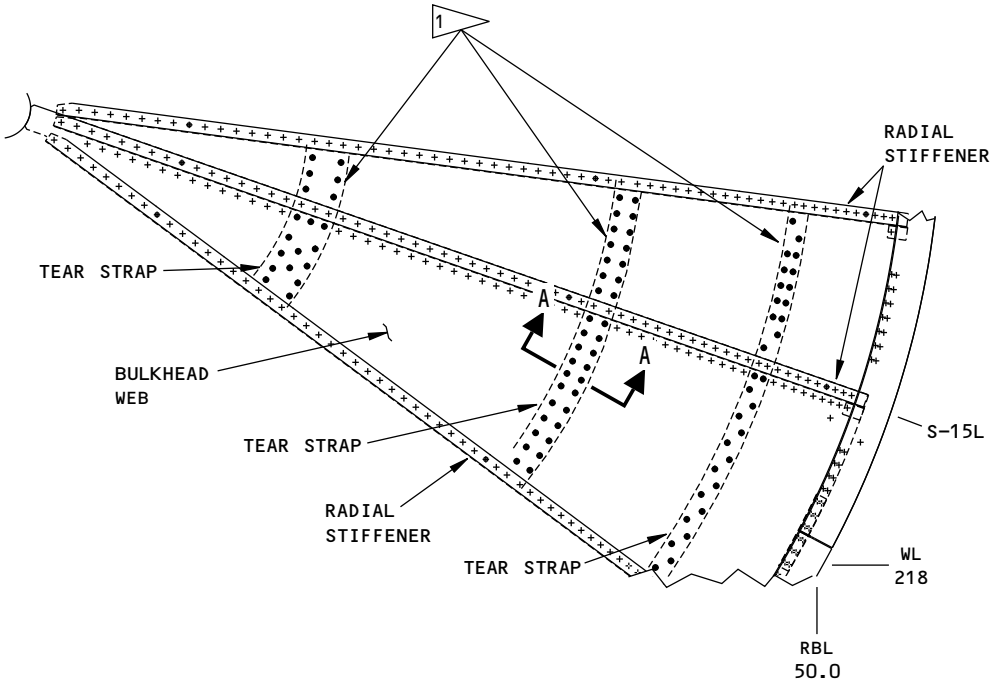

TYPICAL INSPECTION AREA (VIEW AS YOU LOOK AFT)
(STRINGER 15L LOCATION IS SHOWN;
OTHER INSPECTION AREAS ARE ALMOST THE SAME)
DETAIL II

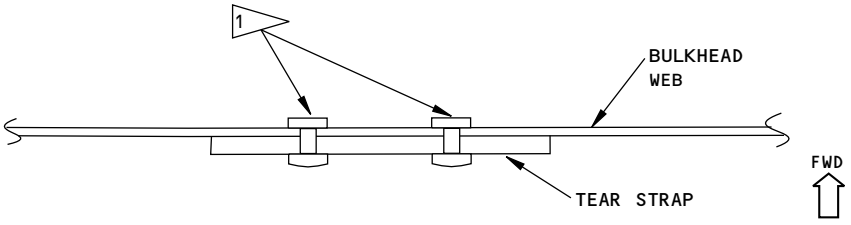

PRESSURE BULKHEAD LAP SPLICE
TYPICAL FASTENER LOCATIONS TO EXAMINE
A-A

NOTE

- TYPICAL FASTENER LOCATIONS TO EXAMINE. IT IS NECESSARY TO EXAMINE ALL THE FASTENER LOCATIONS THAT ARE BETWEEN THE RADIAL STIFFENERS THAT GO THROUGH THE TEAR STRAP AND THE BULKHEAD WEB.

1 MAKE A SCAN TO EXAMINE THE WEB FROM THE FORWARD SIDE OF THE BULKHEAD AT ALL FASTENER LOCATIONS OF THE TEAR STRAP THAT ARE BETWEEN THE RADIAL STIFFENERS AS SHOWN. USE THE HEAD OF THE FASTENER AS A PROBE GUIDE.

2216216 S0000494148_V1

Inspection Area
Figure 1 (Sheet 2 of 2)

BOEING PROPRIETARY - Copyright © Unpublished Work - See title page for details

SURFACE INSPECTION OF THE INTERCOSTAL TENSION STRAPS IN THE EDGE FRAME FOR THE FORWARD GALLEY DOOR AT DOOR STOPS 1, 2, 5 AND 6 (HFEC)

1. Purpose

A. Use this procedure to help find surface cracks in the intercostal tension straps at door stops 1, 2, 5, and 6, along the forward edge frame of the forward galley door. Examine the locations identified in Figure 1.

B. 737 Maintenance Planning Document (MPD) Damage Tolerance Record (DTR) Check Form Reference:

(1) Item: 53-10-15-2

2. Equipment

A. General

(1) Use inspection equipment that can be calibrated on the reference standard as specified in Paragraph 4.

(2) Refer to Part 1, 51-01-00, for data about the equipment manufacturers.

B. Instrument

(1) Use an eddy current instrument that:

(a) Has an impedance plane display.

(b) Operates at a frequency range of 50 to 500 kHz.

(2) The instruments that follow were used to help prepare this procedure.

(a) Nortec 1000; Staveley (Olympus)

(b) Locator 2d; Hocking (General Electric)

C. Probes

(1) A shielded, right-angle probe is necessary to use to do this inspection.

(2) Refer to Part 6, 51-00-00, Procedure 23, paragraph 3.C, for data about probe selection.

(3) The probe that follows was used to help prepare this procedure.

(a) MTF905-50; NDT Engineering Corp (Olympus)

D. Reference Standards

(1) Use reference standard 188A, or an equivalent, as given in Part 6, 51-00-00, Procedure 23, paragraph 3.D.

3. Prepare for the Inspection

A. Identify the inspection areas shown in Figure 1.

B. Lightly sand the rough surfaces and sharp edges of chipped paint to make the inspection surfaces smooth.

C. Fully clean the inspection area.

BOEING PROPRIETARY - Copyright © Unpublished Work - See title page for details

4. Instrument Calibration

A. Calibrate the equipment as specified in Part 6, 51-00-00, Procedure 23, paragraph 5. Use reference standard 188A, or an equivalent, for the calibration.

5. Inspection Procedure

A. Examine the intercostal tension straps for cracks at door stops 1, 2, 5, and 6 of the forward galley door as follows:

(1) Make a scan around the four fasteners shown in Figure 1 at each of the intercostal tension straps along the forward edge frame.

(2) Refer to Part 6, 51-00-00, Procedure 23, paragraph 6, for the inspection procedure.

6. Inspection Results

A. Refer to Part 6, 51-00-00, Procedure 23, paragraph 7, for instructions to help make an analysis of indications that occur during the inspection.

BOEING PROPRIETARY - Copyright © Unpublished Work - See title page for details

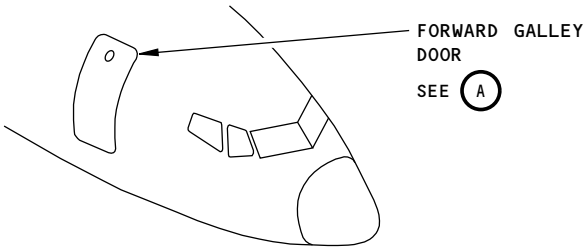

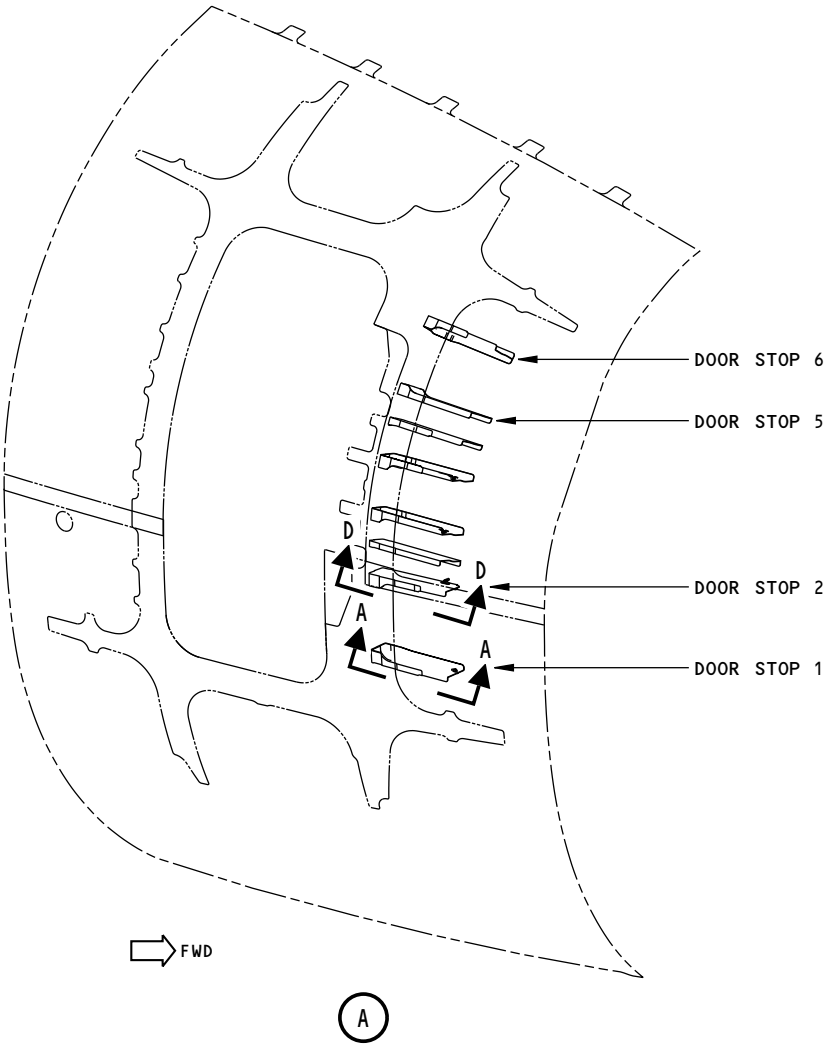

NOTE
- DOOR STOPS ARE NUMBERED FROM THE BOTTOM UP

2215878 S0000494157_V1

Forward Galley Door Inspection Areas
Figure 1 (Sheet 1 of 3)

BOEING PROPRIETARY - Copyright © Unpublished Work - See title page for details

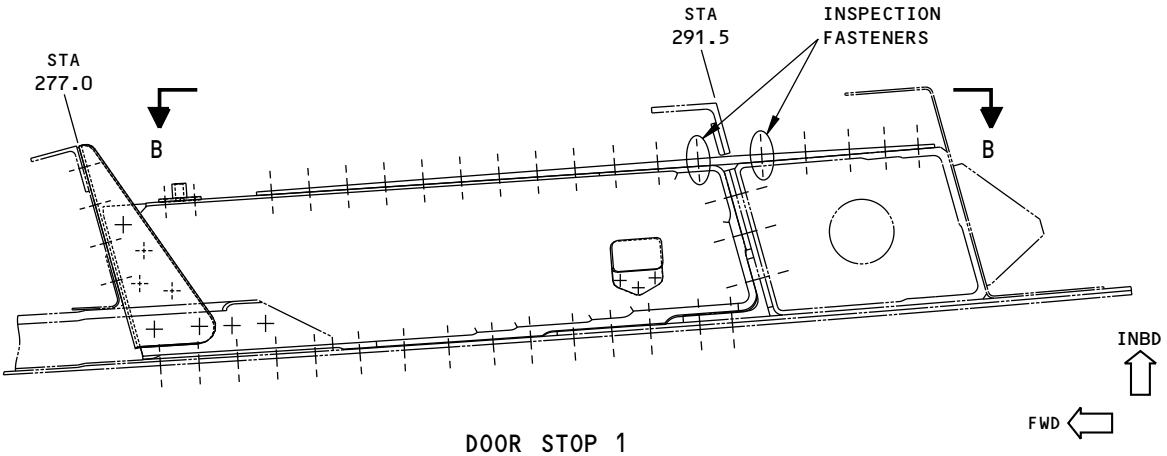

DOOR STOP 1
A-A

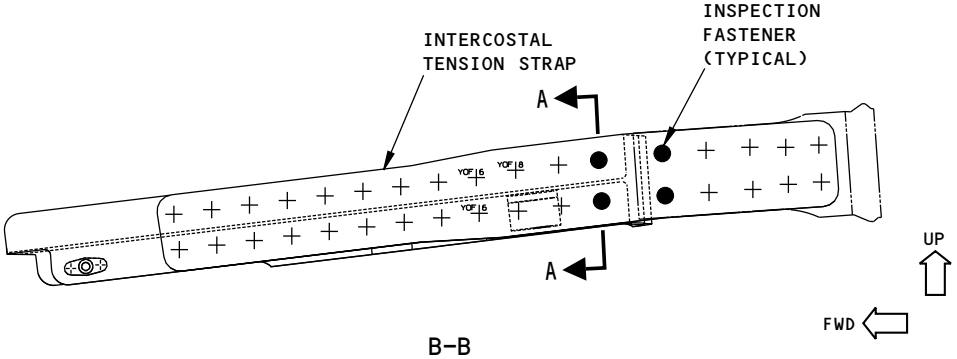

B-B

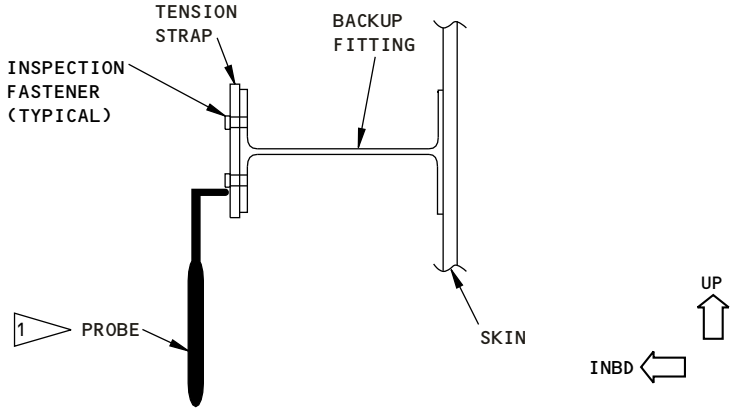

C-C

NOTE

- ● INSPECTION FASTENERS
- • DOOR STOP 1 IS SHOWN.
- • EXAMINE FOUR FASTENERS AT EACH DOOR STOP LOCATION.
- 1 MAKE A SCAN OF THE INTERCOSTAL TENSION STRAP AROUND THE FASTENERS AS SHOWN.

2215908 S0000494158_V1

Forward Galley Door Inspection Areas
Figure 1 (Sheet 2 of 3)

BOEING PROPRIETARY - Copyright © Unpublished Work - See title page for details

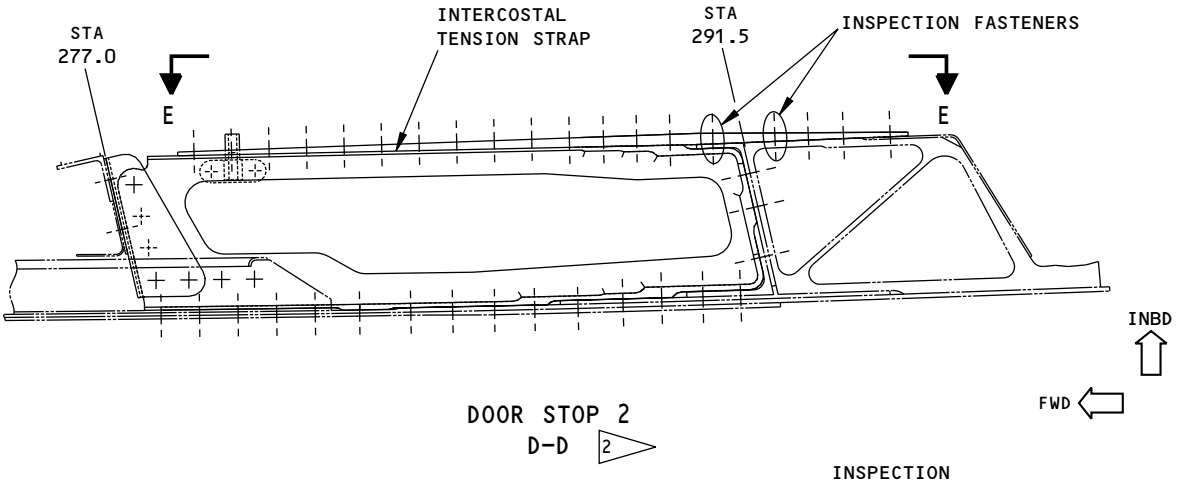

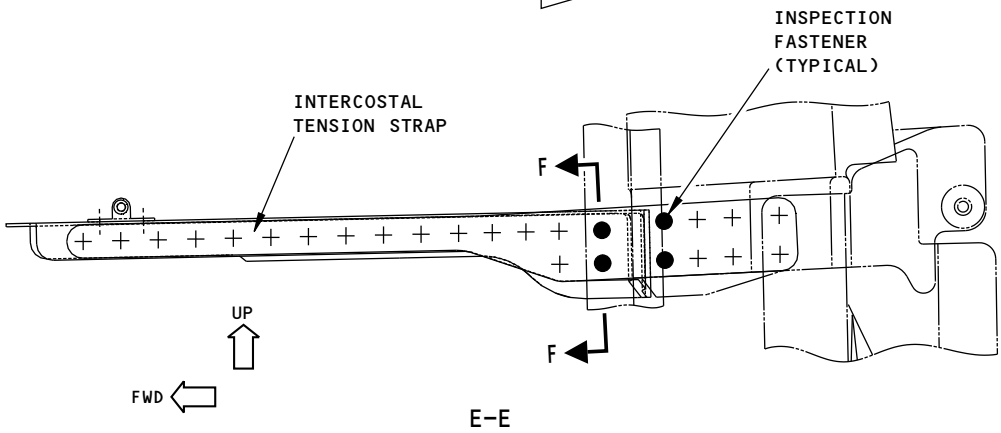

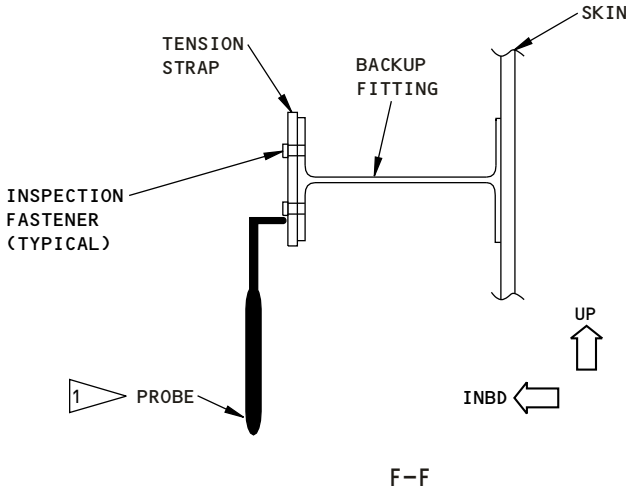

NOTE

2 DOOR STOP 2 IS SHOWN; DOOR STOPS 5 AND 6 ARE ALMOST THE SAME

2215928 S0000494159_V1

Forward Galley Door Inspection Areas
Figure 1 (Sheet 3 of 3)

BOEING PROPRIETARY - Copyright © Unpublished Work - See title page for details

PART 6 - EDDY CURRENT

SURFACE INSPECTION OF THE WL 172 CHORD AT BL 17 OF THE NOSE WHEEL WELL AFT BULKHEAD AT STA 294.5 (HFEC)

1. Purpose

A. Use this procedure to help find surface cracks in the WL 172 chord that is at the aft bulkhead of the nose wheel well. The WL 172 chord is examined around the fasteners that are immediately outboard of LBL 17 and RBL 17 at STA 294.5. Examine the locations identified in Figure 1.

B. 737 Maintenance Planning Document (MPD) Damage Tolerance Record (DTR) Check Form Reference:

(1) Item: 53-10-18-1 (HFEC)

2. Equipment

A. General

(1) Use inspection equipment that can be calibrated on the reference standard as specified in Paragraph 4.

(2) Refer to Part 1, 51-01-00, for data about the equipment manufacturers.

B. Instrument

(1) Use an eddy current instrument that:

(a) Has an impedance plane display.

(b) Operates at a frequency range of 50 to 500 kHz.

(2) The instruments that follow were used to help prepare this procedure.

(a) Nortec 1000; Staveley (Olympus)

(b) Locator 2d; Hocking (General Electric)

C. Probes

(1) A shielded, right-angle probe is necessary to use to do this inspection.

(2) Refer to Part 6, 51-00-00, Procedure 23, paragraph 3.C, for data about probe selection.

(3) The probe that follows was used to help prepare this procedure.

(a) MTF905-50; NDT Engineering Corp. (Olympus)

D. Reference Standards

(1) Use reference standard 188A, or an equivalent, as given in Part 6, 51-00-00, Procedure 23, paragraph 3.D.

3. Prepare for the Inspection

A. Identify the inspection areas shown in Figure 1.

B. Lightly sand the rough surfaces and sharp edges of chipped paint to make the inspection surfaces smooth.

C. Fully clean the inspection area.

BOEING PROPRIETARY - Copyright © Unpublished Work - See title page for details

4. **Instrument Calibration**

   A. Calibrate the equipment as specified in Part 6, 51-00-00, Procedure 23, paragraph 5. Use reference standard 188A, or an equivalent, for the calibration.

5. **Inspection Procedure**

   A. Examine the WL 172 chord for cracks at the fastener locations shown in Figure 1.

      (1) Refer to Part 6, 51-00-00, Procedure 23, paragraph 6, for the inspection procedure.

      (2) Use the fastener collars as a probe guide during each scan.

6. **Inspection Results**

   A. Refer to Part 6, 51-00-00, Procedure 23, paragraph 7, for instructions to help make an analysis of indications that occur during the inspection.

BOEING PROPRIETARY - Copyright © Unpublished Work - See title page for details

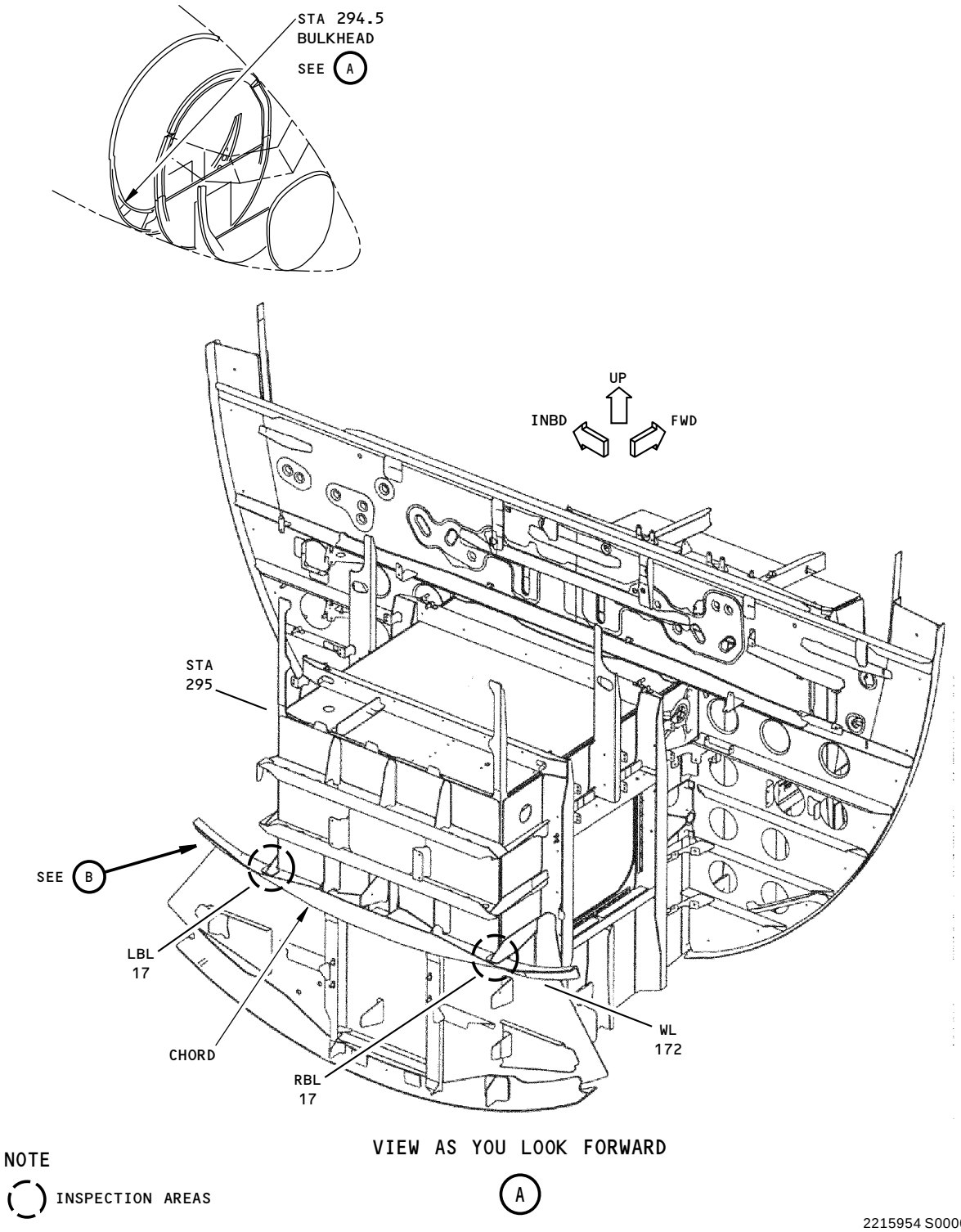

2215954 S0000494162_V1

Inspection Areas
Figure 1 (Sheet 1 of 2)

BOEING PROPRIETARY - Copyright © Unpublished Work - See title page for details

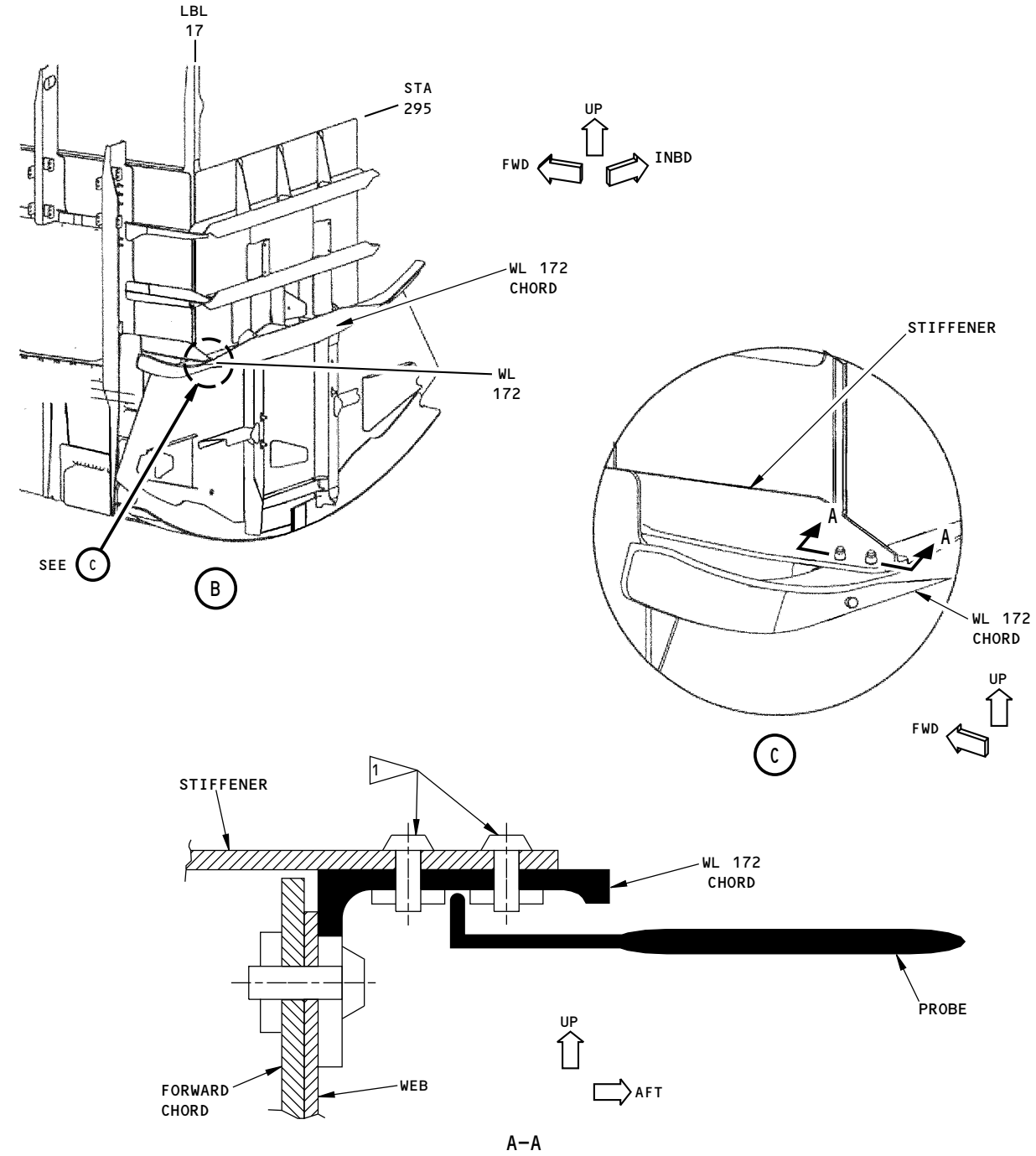

NOTE

- THE LEFT SIDE IS SHOWN; THE RIGHT SIDE IS OPPOSITE

1 EXAMINE THE UPPER CHORD FOR CRACKS AROUND THESE FASTENERS

2216107 S0000494163_V1

Inspection Areas
Figure 1 (Sheet 2 of 2)

BOEING PROPRIETARY - Copyright © Unpublished Work - See title page for details