C Series

BD500 SERIES (PW PW1500G) INITIAL MAINTENANCE TRAINING COURSE

TECHNICAL TRAINING MANUAL

MODULE 2: ELECTRICAL

CMUI: CS130-21.02-06.00-121418

VERSION v6.00

BD-500-1A10

BD-500-1A11

BOMBARDIER

CUSTOMER TRAINING
Montreal Training Centre
8575 Côte-de-Liesse Road
Saint-Laurent, Québec, Canada H4T 1G5
Telephone (514) 344-6620
Toll-Free North America 1 (877) 551-1550
Fax (514) 344-6643
www.batraining.com
iflybombardier.com

Reader Notice and Disclaimer

Please note that this version of C Series Module 2: Electrical is up-to-date as of the date of the training course(s) that you are attending, and may only be used for the purpose of such course(s). Bombardier disclaims responsibility in case of use of the document for any other purpose than said course(s). If you would like to continue using C Series Module 2: Electrical after your subscription access has expired, you are required to register and purchase a subscription plan in order to receive the necessary updates when they become available at the following website: http://www.batraining.com.

Bombardier Inc., or its subsidiaries (collectively "**Bombardier**"), provides this information to its customers and to government authorities in confidence. The information contained herein must therefore be treated as proprietary confidential information, and as such it must be excluded from any request for access to a record pursuant to section 20 of the Access to Information Act, RSC 1985, c A-1, or any other applicable statute with respect to access to information. Public release of this information would be highly detrimental to Bombardier and as such is strictly prohibited without Bombardier's prior written authorization.

This document, which comprises protected intellectual property and trade secrets, shall not be used, reproduced, published, broadcasted, copied, translated, distributed, transferred, stored on any medium, including in a retrieval system, communicated, altered, or converted in any form or by any means, electronic or otherwise, in whole or in part, without Bombardier's prior written authorization. The rights to all patents, inventions, know-how, copyrights, trademarks, trade secrets, registered designs, database rights, semiconductor topography rights, service marks, logos, domain names, business names, trade names, moral rights and all related registrations or applications in any country or jurisdiction contained herein belong to or are used under license by Bombardier. This documentation, the technical data it contains, and all other information shall not be modified, translated, reverse assembled, reverse engineered, or decompiled and shall be used solely for training purposes. Nothing contained herein shall be constructed as granting, explicitly or implicitly, any license or other right to use the information other than for the above-stated training purposes.

Copyright © 1999-2018 Bombardier Inc. or its subsidiaries. All rights reserved.

ACRONYMS AND ABBREVIATIONS

A	
A/T	autothrottle
ABIT	automatic BIT
ABS	absolute
ABS	autobrake system
ACARS	aircraft communications addressing and reporting system
ACC	active clearance control
ACES	avionics cooling and extraction system
ACL	access control list
ACM	air cycle machine
ACM	aircraft condition monitoring
ACMF	aircraft condition monitoring function
ACMP	AC motor pump
ACP	audio control panel
ACU	audio conditioning unit
ADC	air data computer
ADEF	aircraft data exchange function
ADF	automatic direction finder
ADI	attitude direction indicator
ADLS	airborne data link system
ADMF	aircraft data management function
ADRF	aircraft data recording function
ADS	air data system
ADSP	air data smart probe
ADSP	air data system probe
AES	alternate extension system
AEV	avionics exhaust valve
AEMF	aft engine mount fitting
AFCS	automatic flight control system
AFCU	alternate flight control unit
AFDA	adaptive flight display application
AFDT	adaptive flight display table
AFDX	avionics full duplex switched Ethernet
AFM	Airplane Flight Manual
AFP	automated fiber placement
AGB	accessory gearbox
AGL	above ground level
AHC	attitude heading computer
AHMS	aircraft health management system
AIS	aircraft information server
AIS	audio integrating system
AIM	axle interface module
AIM	aircraft identification module
AIM	align-in-motion
AL	autoland
ALC	APU line contactor
ALI	airworthiness limitation item
Al-Li	aluminum-lithium
ALM	application license manager
ALT	altitude
ALTN FLAP	alternate flap
AM	amplitude modulation
AMCU	advanced monitor control unit
AMP	Aircraft Maintenance Publication
ANR	archive noise reduction
ANS	aircraft network switch

Copyright © Bombardier Inc.

AOA	angle-of-attack
AOC	air/oil cooler
AOC	airport operational communications
AODV	active oil damper valve
AOHX	air/oil heat exchanger
AP	autopilot
APM	aircraft personality module
APR	automatic power reserve
APU	auxiliary power unit
AR	automatic realignment
ARTCC	air route traffic control center
ASA	autoland status annunciator
ASC	APU starting contactor
ASM	air separation module
ASRP	aircraft structure repair publication
AT	autothrottle
ATC	air traffic control
ATIS	air traffic information services
ATP	acceptance test procedure
ATS	air turbine starter
ATS	autothrottle system
ATS	air traffic services
AV-VENTS	avionics ventilated temperature sensor
B	
BALODS	bleed air leak and overheat detection system
BAP	buffer air pressure
BAS	bleed air system
BAV	bleed air valve
BACV	buffer air check valve

BAHX	buffer air heat exchanger
BAPS	buffer air pressure sensor
BAVS	buffer air valve solenoid
BAVSOV	buffer air shutoff valve
BCCC	base coat clear coat
BCS	brake control system
BDCU	brake data concentrator unit
BFO	beat frequency oscillator
BGM	boarding music
BIT	built-in test
BITE	built-in test equipment
BL	buttock line
BLC	battery line contactor
BLS	bifurcation latch system
BMPS	bleed monitoring pressure sensor
BPCU	bus power control unit
BPMS	bleed pressure monitoring sensor
BSC	battery start contactor
BTC	bus tie contactor
BTS	base transceiver station
BTMS	brake temperature monitoring system
BTS	brake temperature sensor
BTS	bleed temperature sensor
BVID	barely visible impact damage
C	
CADTS	cargo duct temperature sensor
CAI	cowl anti-ice
CAIS	cowl anti-ice system
CAIV	cowl anti-ice valve

Copyright © Bombardier Inc.

CAM	cockpit area microphone
CAN	controller air network
CAS	calibrated airspeed
CAS	crew alerting system
CATS	cargo temperature sensor
CB	circuit breaker
CBIT	continuous built-in test
CBP	circuit breaker panel
CBV	cross-bleed valve
CC	cabin controller
CCDL	cross-channel data link
CCM	common computing module
CCMR	common computing module runtime
CCP	cursor control panel
CCU	camera control unit
CCW	counterclockwise
CDC	control and distribution cabinet
CDI	course deviation indicator
CDTS	compressor discharge temperature sensor
CEM	cover and environmental module
CF	configuration file
CFIT	controlled flight into terrain
CFRP	carbon fiber reinforced polymer
CIC	compressor intermediate case
CIC	corrosion inhibiting compound
CLAWS	control laws
CM	configuration manager
CMS	cabin management system
CMU	communication management unit

CMUI	configuration management unique identifier
CNS	communications, navigation and surveillance
COM	communication
CPCS	cabin pressure control system
CPCV	compensator pressure check valve
CPD	circuit protection device
CPDD	circuit protection device detector
CPDLC	controller-pilot data link communications
CPN	Collins part number
CPU	central processing unit
CRC	cyclical redundancy check
CRES	corrosion resistant steel
CSD	cabin service display
CSD	customer service display
CSMU	crash-survivable memory unit
CSOV	cargo shutoff valve
CT	crew terminal
CT	current transformer
CTP	control tuning panel
CVR	cockpit voice recorder
CW	clockwise
CWB	center wing box
D	
D/I	discrete input
D/O	discrete output
DBM	database manager
DCM	data concentrator module
DCMR	data concentration module runtime
DCS	data concentration system

Copyright © Bombardier Inc.

DCU	directional control unit
DCV	directional control valve
DFSOV	dual-flow shutoff valve
DLCA	data link communications application
DMA	display manager application
DMC	data concentrator unit module cabinet
DME	distance measuring equipment
DMM	data memory module
DP	differential protection
DPCT	differential protection current transformer
DPI	differential pressure indicator
DPLY	deploy
DRA	diagnostic and reporting application
DSK	double-stack knob
DSM	digital switching module
DSU	data storage unit
DSPU	diode shunt protection unit
DTC	DC tie contactor
DTE	damage tolerance evaluation
DTI	damage tolerance inspection
DTS	duct temperature sensor
DU	display unit
E	
EBC	essential bus contactor
ECL	electronic checklist
ECS	environmental control system
ECU	electronic control unit
ECU	external compensation unit
EDCM	electronic door control module

EFAN	extraction fan
EDM	emergency descent mode
EDP	engine-driven hydraulic pump
EDP	engine-driven pump
EDU	electronic display unit
EEC	electronic engine control
EEGS	emergency electrical power generation
EEPROM	electrical erasable programmable read only memory
EESS	emergency escape slide system
EFB	electronic flight bag
EEGS	emergency electrical power generation
EFCS	electronic flight control system
eFIM	electronic fault isolation manual
EFIS	electronic flight instrument system
EGT	exhaust gas temperature
EHSV	electrohydraulic servovalve
EIC	engine inlet cowl
EICAS	engine indication and crew alerting system
ELC	external power line contactor
ELT	emergency locator transmitter
EMA	electric motor actuator
EMU	expansion module unit
EMAC	electric motor actuator controller
EMCU	electric motor control unit
EMER	emergency
EMPC	emergency power control
EOAM	emergency opening assist means
EOF	end-of-flight
EPC	electrical power center

Copyright © Bombardier Inc.

EPC	electronic power center
EPGD	electrical power generation and distribution
EPGDS	electrical power generation and distribution system
EPGS	electrical power generation system
EPP	engine programming plug
EPSU	emergency power supply unit
EPTRU	external power transformer rectifier unit
ERAV	emergency ram air valve
ESD	electrostatic discharge
ETC	essential tie contactor
ETOPS	extended-range twin-engine operational performance standards
F	
FA	flight attendant
FAA	Federal Aviation Authority
FADEC	full authority digital engine control
FANS	future air navigation system
FAV	fan air valve
FBC	front bearing compartment
FBW	fly-by-wire
FBWPC	fly-by-wire power converter
FC	full close
FCP	flight control panel
FCS	flight control system
FCBS	fatigue critical baseline structure
FCEE	flight crew emergency exit
FCSB	fan cowling support beam
FCU	flush control unit
FCU	fuel control unit

FCV	flow control valve
FD	flight director
FDDSS	flight deck door surveillance system
FDE	flight deck effect
FDG	fan drive gearbox
FDGS	fan drive gear system
FDR	flight data recorder
FDRAS	flight deck remote access system
FDV	flow divider valve
FEGV	fan exit guide vane
FEMB	forward engine mount bulkhead
FF	fuel flow
FFDP	fuel flow differential pressure
FFSV	free fall selector valve
FG	flight guidance
FGS	flight guidance system
FIC	fan intermediate case
FIDEX	fire detection and extinguishing
FIM	fault isolation manual
FLC	flight level change
FLS	fast load-shed
FLTA	forward-looking terrain avoidance
FMA	flight mode annunciator
FMS	flight management system
FMSA	flight management system application
FMV	fuel metering valve
FO	full open
FOD	foreign object debris
FOHX	fuel/oil heat exchanger

Copyright © Bombardier Inc.

FOHXBV	fuel/oil heat exchanger bypass valve
FPS	feedback position sensor
FPV	flight path vector
FQC	fuel quality computer
FS	fixed structure
FS	flight station
FS	fuselage station
FSA	file server application
FSV	flow sensor venturi
FSB	fasten seat belt
FSCL	flight spoiler control lever
FTIS	fuel tank inerting system
FW	failure warning
FWSOV	firewall shutoff valve
G	
GA	go-around
GCF	ground cooling fan
GCR	generator control relay
GCS	global connectivity suite
GCU	generator control unit
GFP	graphical flight planning
GFRP	glass fiber reinforced polymer
GHTS	galley heater temperature sensor
GLC	generator line contactor
GMT	Greenwich mean time
GNSS	global navigation satellite system
GPWS	ground proximity warning system
GS	glideslope
GS	ground spoiler

GSA	ground spoiler actuator
GSCM	ground spoiler control module
GSE	ground support equipment
GUI	graphical user interface
H	
HAAO	high altitude airport operation
HDG	heading
HF	high frequency
HID	high-intensity discharge
HLEIF	high load event indication function
HLSL	high lift selector lever
HMU	health management unit
HOR	hold open rod
HP	high-pressure
HPC	high-pressure compressor
HPD	hydraulic pump depressurization
HPGC	high-pressure ground connection
HPSOV	high-pressure shutoff valve
HPT	high-pressure turbine
HPV	high-pressure valve
HRD	high-rate discharge
HRTDb	high-resolution terrain database
HS	handset
HS	high solid
HSI	horizontal situation indicator
HSTA	horizontal stabilizer trim actuator
HSTS	horizontal stabilizer trim system
HUD	head-up display
HUDS	head-up display system

Copyright © Bombardier Inc.

I	
I/O	input/output
IAMS	integrated air management system
IAS	indicated airspeed
IASC	integrated air system controller
IBIT	initiated built-in test
IBR	integral bladed rotor
ICAO	International Civil Aviation Organization
ICCP	integrated cockpit control panel
ICDU	integrated control display unit
ICU	inerting control unit
ICU	isolation control unit
ICV	isolation control valve
IFE	in-flight entertainment system
IFEC	in-flight entertainment and connectivity system
IFIS	integrated flight information system
IFPC	integrated fuel pump and control
IFS	information landing system
IFS	inner fixed structure
IGN	ignition
IGV	inlet guide vane
IGVA	inlet guide vane actuator
IIM	inceptor interface module
IIV	inlet isolation valve
ILS	instrument landing system
IMA	integrated modular avionics
IMS	information management system
INT	intermittent
IOC	input/output concentrator
IOM	input/output module
IP	information provider
IPC	integrated processing cabinet
IPCKV	intermediate pressure check valve
IPS	inches per second
IPS	integrated processing system
IRCV	inlet return check valve
IRS	inertial reference system
IRU	inertial reference unit
ISI	integrated standby instrument
ISM	input signal management
ISPS	in-seat power supply
ISPSS	in-seat power supply system
ITT	interturbine temperature
J	
JOSV	journal oil shuttle valve
L	
L/S	lube/scavenge
LAN	local area network
LBIT	landing built-in test
LCD	life cycle data
LCT	line current transformer
LED	light-emitting diode
LLU	LED lighting unit
LGCL	landing gear control lever
LGCV	landing gear control valve
LGIS	landing gear indicating system
LGSCU	landing gear and steering control unit
LGSV	landing gear selector valve

Copyright © Bombardier Inc.

LOC	localizer
LOP	low oil pressure
LOPA	layout of passenger area
LP	low-pressure
LPC	low-pressure compressor
LPSOV	low-pressure shutoff valve
LPT	low-pressure turbine
LRD	low-rate discharge
LRM	line replaceable module
LRU	line replaceable unit
LSK	line select key
LSOP	lubrication and scavenge oil pump
LV	lower sideband voice
LVDS	low-voltage differential signaling
LVDT	linear variable differential transformer
M	
MAX	maximum
MB	marker beacon
MCDL	motor control data link
MCE	motor control electronic
MCR	minimum control requirement
MCV	mode control valve
MDU	manual drive unit
MEL	minimum equipment list
MES	main engine start
MFK	multifunction keyboard panel
MFP	multifunction probe
MFS	multifunction spoiler
MFW	multifunction window

MIXTS	mix manifold temperature sensor
MKP	multifunction keyboard panel
MLG	main landing gear
MLW	maximum landing weight
MMEL	Master Minimum Equipment List
MOF	main oil filter
MOT	main oil temperature
MPP	maintenance planning publication
MPSOV	minimum pressure-shutoff valve
MRW	maximum ramp weight
MSV	mode select valve
MTD	master time and date
MTO	maximum rated takeoff
MTOW	maximum takeoff weight
MWW	main wheel well
MZFW	maximum zero fuel weight
N	
NA	not activated
NACA	National Advisory Committee for Aeronautics
ND	nosedown
NCD	no computed data
NCG	network communication gap
NCU	network control unit
NDB	non-directional beacon
NDO	network data object
NEA	nitrogen-enriched air
NEADS	nitrogen-enriched air distribution system
NLG	nose landing gear
NO PED	no personal electronic device

Copyright © Bombardier Inc.

NPRV	negative pressure-relief valve
NU	noseup
NWS	nosewheel steering
NVM	non-volatile memory
O	
OAT	outside air temperature
OBB	outboard brake
OBIGGS	onboard inlet gas generation system
OC	overcurrent
OCM	oil control module
OCM	option control module
ODI	overboard discharge indicator
ODL	onboard data loader
ODM	oil debris monitor
OEA	oxygen-enriched air
OEM	original equipment manufacturer
OF	overfrequency
OFV	outflow valve
OMS	onboard maintenance system
OMS IMA	OMS interactive maintenance application
OMSA	onboard maintenance system application
OMST	onboard maintenance system table
OPAS	outboard position asymmetry sensor
OPU	overvoltage protection unit
OSP	opposite-side pressure
OSS	overspeed/shutdown solenoid
OT	other traffic
OV	overvoltage
OWEE	overwing emergency exit

P	
P&W	Pratt and Whitney
P2	inlet pressure
PA	passenger address
PAX	passenger
PBA	pushbutton annunciator
PBE	protective breathing equipment
PBIT	power-up built-in test
PCE	precooler exhaust
PCE	precooler exit
PCU	power control unit
PDF	portable document format
PDOS	power door operating system
PDPS	pack pressure differential sensor
PDL	permitted damage limits
PDS	power distribution system
PDTS	pack discharge temperature sensor
PDU	power drive unit
PED	personal electronic device
PEM	power environment module
PEV	pressure equalization valve
PFCC	primary flight control computer
PFD	primary flight display
PFS	post flight summary
PHMU	prognostics and health management unit
PIC	peripheral interface controller
PIC	processor-in-command
PIFS	pack inlet flow sensor
PIM	panel interface module

Copyright © Bombardier Inc.

PIPS	pack inlet pressure sensor
PLD	programmable logic device
PLD	proportional lift dump
PMA	permanent magnet alternator
PMA	program manager application
PMAG	permanent magnet alternator generator
PMG	permanent magnet generator
POB	power off brake
POB	pressure off brake
POR	point of regulation
PPM	power producing module
PPT	pedal position transducer
PRAM	prerecorded announcement and message
PRSOV	pressure-regulating shutoff valve
PRV	pressure-regulating valve
PRV	pressure-relief valve
PS	passenger service
PS	pressure sensor
PSA	print server application
PSE	principal structural element
PSU	passenger service unit
PSUC	passenger service unit controller
PT	proximate traffic
PT	pressure transducer
P_t	total pressure
PTS	pack temperature sensor
PTT	push-to-talk
PTU	power transfer unit
PTY	priority

PVT	position, velocity, time
PWM	pulse width modulation
Q	
QAD	quick attach/detach
QEC	quick engine change
R	
RA	radio altimeter
RA	resolution advisory
RAM	receiver autonomous integrity monitoring
RAD	radio altitude
RARV	ram air regulating valve
RAT	ram air turbine
RDC	remote data concentrator
RDCP	refuel/defuel control panel
REL	relative altitude
REO	repair engineering order
RET	retracted
REU	remote electronic unit
RF	radio frequency
RFAN	recirculation fan
RGA	rotary geared actuator
RGC	RAT generator control
RIPS	recorder independent power supply
RIU	radio interface unit
RLC	RAT line contactor
RMA	remote maintenance access
RMS	radio management system
ROLS	remote oil lever sensor
ROV	redundant overvoltage

Copyright © Bombardier Inc.

RPA	rudder pedal assembly
RPM	revolutions per minute
RSA	report server application
RSP	reversion switch panel
RTA	receiver-transmitter antenna
RTD	resistance temperature device
RTD	resistive thermal device
RTL	ready-to-load
RTO	rejected takeoff
RTS	return to service
RTSA	radio tuning system application
RVDT	rotary variable differential transformer
S	
SAL	specific airworthiness limitation
SAT	static air temperature
SATCOM	satellite communication
SAV	starter air valve
SB	service bulletin
SBAS	satellite-based augmentation system
SBIT	start-up BIT
SCV	surge control valve
SCV	steering control valve
SEB	seat electronics box
SELCAL	selective calling
SFCC	slat/flap control computer
SFCL	slat/flap control lever
SFCP	slat/flap control panel
SFECU	slat/flap electronic control unit
SFIS	standby flight instrument system

SFV	safety valve
SLS	slow load-shed
SMS	surface management system
SOV	solenoid operated valve
SOV	shutoff valve
SPCV	supply pressure check valve
SPDS	secondary power distribution system
SPDT	single pole double throw
SPKR	speaker
SPM	seat power module
SSC	sidestick controller
SSD OML	solid-state onboard media loader
SSI	structural significant item
SSEC	static source error connection
SSPC	solid-state power controller
SSPC-CB	solid-state power controller circuit breaker
SSRPC	solid-state remote power controller
SUA	special use airspace
SVA	stator vane actuator
SVS	synthetic vision system
T	
T/M	torque motor
T/R	thrust reverser
T2	inlet temperature
TA	traffic advisory
TACKV	trim air check valve
TAPRV	trim air pressure-regulating valve
TASOV	trim air shutoff valve
TAT	total air temperature

Copyright © Bombardier Inc.

TAV	trim air valve
TAWS	terrain awareness and warning system
TAWSDb	terrain awareness and warning system database
TCA	turbine cooling air
TCAS	traffic alert and collision avoidance system
TCB	thermal circuit breaker
TCDS	type certificate data sheet
TCF	terrain control valve
TDR	transponder
TCV	temperature control valve
TEC	turbine exhaust case
TED	trailing edge down
TEU	trailing edge up
TFTP	trivial file transfer protocol
TIC	turbine inlet case
TIC	turbine intermediate case
TIV	temperature inlet valve
TIV	temperature isolation valve
TLA	throttle lever angle
TLC	TRU line contactor
TLD	time limited dispatch
TOGA	takeoff/go-around
TPIS	tire pressure indicating system
TPM	TAWS processing module
TPM	tire pressure module
TPMA	terrain processing module application
TPMU	tire pressure monitoring unit
TPS	tire pressure sensor
TPSA	terrain processing system application

TQA	throttle quadrant assembly
TRAS	thrust reverser actuation system
TRU	transformer rectifier unit
TSC	TRU start contactor
TSFC	thrust specific fuel consumption
TSM	trip status monitor
TSO	technical standard order
TSS	traffic surveillance system
TTG	time-to-go
TTP	time-triggered protocol
TWIP	terminal weather information for pilot
U	
UART	universal asynchronous receiver transmitter
UBMF	usage-based monitoring function
UF	underfrequency
ULB	underwater locator beacon
UPLS	ultrasonic point level sensors
USB	universal serial bus
UTC	universal time coordinated
UV	upper sideband voice
UV	ultraviolet
UV	undervoltage
V	
VAC	volts alternating current
VDC	voltage direct current
VDL	VHF data link
VDLM	VHF data link mode
VENTS	ventilated temperature sensor
VFG	variable frequency generator

Copyright © Bombardier Inc.

VFGOOHX	variable frequency generator oil/oil heat exchanger
VGMD	vacuum generator motor drive unit
VHF-NAV	VHF navigation
VID	visible impact damage
VL	virtual link
VLAN	virtual local area network
VNAV	vertical navigation
VOC	volatile organic compounds
VOR-VHF	VHF omnidirectional radio
VORV	variable oil reduction valve
VPA	video passenger announcement
VSD	vertical situation display
VSPD	V-speed
VSWR	voltage standing-wave radio
VTU	video transmission unit
W	
WAI	wing anti-ice
WAP	wireless access point
WAIS	wing anti-ice system
WAITS	wing anti-ice temperature sensor
WAIV	wing anti-ice valve
WBV	windmill bypass valve
WIPC	windshield ice protection controller
WL	waterline
WOFFW	weight-off-wheels
WOW	weight-on-wheels
WPS	words-per-second
WS	wing situation
WSA	web server application

WST	wheel speed transducer
WTBF	wing-to-body fairing
WWHS	windshield and side window heating system
WWS	waste water system
WWSC	water and waste system controller
WXR	weather radar
Z	
ZB	zone box
ΔP	differential pressure

Copyright © Bombardier Inc.

Page Intentionally Left Blank

MODULE 2: ELECTRICAL - LIST OF CHANGES

The following table details the changes applied to this revision:

ATA NAME AND NUMBER	CMUI NUMBER	CHANGES APPLIED
Front Page	CS130-21.02-06.00-121418	Version number and CMUI number
Acronyms and Abbreviations	CS130-21.02-06.00-121418	Deleted BCT (bus tie contactor current transformer) and added MKP (multifunction keyboard panel) (pges ii and viii)
List of Changes	CS130-21.02-06.00-121418	New CMUI
24 Electrical Power	CS130-21.02-06.00-121418	Changed External AC Receptacle to External Power Receptacle (pge 24-5)
		Changed ‘on top of the main gearbox’ to ‘on top of the fuel/oil manifold’ (pge 24-8)
		Updated VFG Oil System section (text and graphic) (pges 24-16, 24-17)
		Changed oil lamp to oil light (pge 24-22)
		Changed Fire Push Button Annunciator to L(R) ENG FIRE Pushbutton Annunciator; added APU FIRE PBA where required; changed GEN switch to GEN PBA (pge 24-26)
		Changed EXT PWR switch to EXT PWR PBA; pin EF to pin E-F (pge 24-30)
		Changed ‘The following page provides the CAS messages for...’ to ‘crew alerting system (CAS) and INFO messages for...’ (pges 24-32, 24-62, 24-74, 24-150, 24-186, 24-202, 24-236)
		Changed APU GEN switch to APU GEN PBA; control switch to APU GEN PBA (pge 24-33)
		Changed QAD device to QAD adapter (pge 24-38)
		Changed utilize to use (pge 24-46)
		Changed battery switch to BATT 1(2) switch (pges 24-48, 24-63)
		Changed flight deck to ELECTRICAL panel (pge 24-54)
		Moved Battery Charger Test section before CAS message tables; changed button to pushbutton (pges 24-60, 24-61)
		Changed BATT charger to battery charger; BATT 1(2) heater to battery 1(2) heater (pges 24-63, 24-65)

Copyright © Bombardier Inc.

ATA NAME AND NUMBER	CMUI NUMBER	CHANGES APPLIED
24 Electrical Power (cont)	CS130-21.02-06.00-121418	Added alternator to PNAG definition (pge 24-70)
		Changed L/R engine to left and right engine (pge 24-75)
		Added legend (pge 24-79)
		Changed BUS to Bus in legend (pges 24-83, 24-87, 24-147)
		Updated legend and added panel caption (pge 24-97)
		Added panel and page captions on all graphics (pges 24-103 to 24-141, 24-229 to 24-333)
		Changed External AC Power to External Power in heading and text; added EXT PWR PBA to text for AVAIL light; updated text (pge 24-108)
		Changed figure title ‘External AC Online’ to ‘External Power Online’ (pge 24-109)
		Changed external AC to external power (pges 24-110, 24-111, 24-120, 24-121, 24-122, 24-123)
		Updated graphic (pge 24-127)
		Changed ‘indication is shown’ to ‘light illuminates’; EXT PWR SERV IN USE light to EXT PWR SERV PBA IN USE light (pge 24-132)
		Changed generator control switch to GEN PBA; BUS ISOL signal to BUS ISOL switch (pge 24-134)
		Changed ESSENTIAL to ESS (pge 24-142)
		Added ‘five’ to ‘control and distribution cabinets’ (pge 24-152)
		Updated text in Microprocessor-Communications Line Replaceable Modules section (pge 24-160)
		Changed ice detected signal to ice detection signal (pge 24-182)
		Changed OMS DATALOAD PAGE to OMS DATA LOAD PAGE (pge 24-185)
		Added text for CB application (pge 24-192)
		Changed ‘external AC power operation’ section to ‘External Power operation’ section; ground service switch to ground service power (pge 24-194)
		Updated graphic (pge 24-209)
		Updated text in auto deployment paragraph (pge 24-224)
		Updated graphics (pges 24-225, 24-227)

Copyright © Bombardier Inc.

ATA NAME AND NUMBER	CMUI NUMBER	CHANGES APPLIED
24 Electrical Power (cont)	CS130-21.02-06.00-121418	Changed RAT GEN ON light to RAT GEN PBA ON light; RAT GEN switch to RAT GEN PBA (pge 24-226)
		Changed ‘pin must be installed to the RAT’ to ‘pin must be installed to lock the RAT’ (pge 24-238)
31 Indicating/Recording Systems	CS130-21.02-06.00-121418	Changed pushbutton switches to pushbutton annunciators (PBAs) (pge 31-2)
		Updated panel names (pges 31-3, 31-5, 31-7, 31-43, 31-85)
		Changed multifunction keypad with multifunction keyboard panel (pge 31-6)
		Added panel captions and updated displays (pge 31-9)
		Updated panel names (pges 31-11, 31-15, 31-17)
		Relocated RDC 1 (pge 31-13)
		Added text for cabinet provisions (pge 31-38)
		Added details for backplane view and rear connector view (pge 31-39)
		Changed ‘...used by the synthetic vision system (SVS), if installed.’ to ‘used by the terrain awareness and warning system (TAWS).’ (pge 31-50)
		Added last paragraph (pge 31-52)
		Modified last paragraph (pge 31-58)
		Deleted windshield wipers (pge 31-67)
		Added CAS Messages heading (pges 31-81, 31-151, 31-161)
		Added last paragraph (pge 31-86)
		Updated reversion switch panel (pges 31-89, 31-95, 31-139)
		Updated names of controls (pge 31-91)
		Added ‘on DU 5 only’ after ‘multifunction window (MFW)’ (pge 31-92)
		Changed EICAS knob to DISPLAY switch; updated text REV bullet (pge 31-94)
		Updated reversion switch panel (pge 31-97)
		Added NOTE and HMU maintenance panel; updated MFW format selection (pge 31-99)
		Updated reversion switch panel and PFD and EICAS (pge 31-107)
		Added build 8A display reversion, updated related text and graphics, and deleted EICAS compressed format (pges 31-108 to 31-114)

Copyright © Bombardier Inc.

ATA NAME AND NUMBER	CMUI NUMBER	CHANGES APPLIED
31 Indicating/Recording Systems (cont)	CS130-21.02-06.00-121418	Updated Automatic Display Reversion section (pges 31-106 to 31-115)
		Added window heat/probe heat panel caption; changed master warning/master caution cancel to master warning/caution cancel (pge 31-123)
		Changed master warning/caution control to master warning/caution PBAs (pge 31-127)
		Changed master warning/master caution PBA to master WARNING/CAUTION PBA; master warning/master caution cancel to master warning/caution cancel (pges 31-136, 31-137)
		Changed EICAS knob to DISPLAY switch and updated text; deleted text regarding unavailable EICAS swap function (pge 31-138)
		Changed CAS Message List Display Control to CAS Pushbutton to Display CAS Message List (pge 31-141)
		Added text for triaxial accelerometer and updated graphic accordingly (pges 31-152, 31-153
		Added bullet for triaxial accelerometer (pge 31-154)
		Added Triaxial Accelerometer section (pges 31-156, 31-157)
		Added last paragraph and updated graphic accordingly; added ENGINE panel caption (pges 31-158, 31-159)
45 Central Maintenance System	CS130-21.02-06.00-121418	Updated text (pge 45-2)
		Changed refuel/deufel control panel to refuel interphone panel and equipment bay maintenance panels to equipment bay service panels (pge 45-7)
		Changed ‘The following page provides the CAS messages for...’ to ‘crew alerting system (CAS) and INFO messages for...’ (pge 45-14)
		Changed heading ‘CAS and info messages’ to ‘CAS messages’; changed MAINTENANCE switch to AIRCRAFT switch in STATUS message table (pge 45-15)
		Added NOTE (pges 45-22, 45-24)
		Changed headings MSG DATA, LRU DATA, TEST to MSG DATA Tab, LRU DATA Tab, TEST Tab (pges 45-26, 45-32)
		Changed figure title ‘Using the Data Tab’ to ‘Viewing Data’ (pge 45-31)

Copyright © Bombardier Inc.

ATA NAME AND NUMBER	CMUI NUMBER	CHANGES APPLIED
45 Central Maintenance System (cont)	CS130-21.02-06.00-121418	Changed heading ‘Test Page’ to ‘TEST Tab’ (pge 45-32)
		Changed figure title ‘Using the Test Page’ to ‘Selecting the TEST Tab’ (pge 45-33)
		Changed CANCEL button to CANCEL soft key; updated text (pge 45-38)
		Changed heading ‘Data Reader Page’ to ‘APU ECU - Data Reader Page’ and updated text and figure title accordingly; added ‘Data tab’ to the end of first bullet (pges 45-52, 45-53)
		Changed ‘Selecting a flight leg displays a sub-menu and...’ to ‘Selecting a flight leg displays a Post Flight Summary Details Page and...’; changed FDE menu to FDE tab; added paragraph ‘The OMS generates a Post Flight Summary (PFS) report...’ (pge 45-54)
		Added ‘Tab’ to figure title (pge 45-55)
		Changed ‘Selecting a specific FDE displays...’ to ‘Selecting a specific FDE on the Post Flight Summary Page displays...’; changed submenus to tabs; changed FAULT MSGS menu to FAULT MSGS tab; added Occurrence and Recurrence subsection (pge 45-56)
		Changed heading ‘Post Flight Summary - FAULT’ to ‘Post Flight Summary Details Page - FAULT Tab’; changed ‘Fault MSG menu’ to ‘FAULT tab’ and updated text accordingly; changed ‘submenus’ to ‘tabs’ and update text (pge 45-58)
		Added ‘Details Page’ to figure title (pge 45-59)
		Changed heading ‘Post Flight Summary - SERVICE’ to ‘Post Flight Summary Details - SERVICE’; updated text (pge 45-60)
		Added ‘Details’ to figure title (pges 45-61, 45-63)
		Changed heading ‘Post Flight Summary - SRVCING’ to ‘Post Flight Summary Details - SRVCING’ (pge 45-62)
		Changed ‘FDE page’ to ‘FDEs’ in second bullet text (pge 45-64)
		Changed ‘FDE summary’ to ‘FDE summary page’ in heading and text (pge 45-66)
		Changed headings ‘Fault Messages’ and ‘Fault Message Summary’ to ‘Fault Messages Page’ and ‘Fault Message Summary Page’; changed refresh button to Refresh soft key (pge 45-68)

Copyright © Bombardier Inc.

ATA NAME AND NUMBER	CMUI NUMBER	CHANGES APPLIED
45 Central Maintenance System (cont)	CS130-21.02-06.00-121418	Changed HELP, MSG DATA, LRU DATA to HELP tab, MSG DATA tab, LRU DATA tab; changed refresh button to Refresh soft key (pge 45-70)
		Deleted System Parameters section (pge 45-72); Changed heading ‘LRU/System Operations’ to ‘LRU/System Operations Page’; changed View combo box to View drop-down menu
		Changed ‘The page provides the following selections:’ to ‘The LRU/System Operations page provides the following tabs:’; changed NVM button and Start button to NVM soft key and Start soft key (pge 45-74)
		Changed heading ‘System Configuration’ to ‘System Configuration Page’; changed X button to X soft key (pges 45-76, 45-80)
		Changed heading ‘Maintenance Reports’ to ‘Maintenance Reports Page’ and updated text accordingly; updated the third bullet list; changed Start button and Cancel button to Start soft key and Cancel soft key (pge 45-86)
		Changed figure title ‘Maintenance Reports Range and Write To Options’ to ‘Maintenance Reports Page Report Type and Write To Options’ (pge 45-87)
		Corrected ‘Change Maintenance Flight Log’ to ‘Change Maintenance Flight Leg’ (pge 45-88)
		Changed figure title ‘Utility Functions Password and Menu’ to ‘Utility Functions Password and Utility Functions Menu Pages’ (pge 45-89)
		Changed Write Maintenance Reports button to Write Maintenance Reports soft key (pge 45-90)
		Changed heading ‘Change Automatically Initiated Reports’ to ‘Change Automatically Initiated Reports Page’; updated text and figure title accordingly (pges 45-92, 45-93)
		Changed heading and figure title ‘Change Aircraft SELCAL Code’ to ‘Change Aircraft SELCAL Code Page’ (pges 45-94, 45-95)
		Changed heading ‘Change Maintenance Flight Leg’ to ‘Change Maintenance Flight Leg Page’; updated text and figure title accordingly (pges 45-96, 45-97)
		Changed heading ‘Change Report Configuration’ to ‘Change Report Configuration Page’; updated text and figure title accordingly (pges 45-98, 45-99)

Copyright © Bombardier Inc.

ATA NAME AND NUMBER	CMUI NUMBER	CHANGES APPLIED
45 Central Maintenance System (cont)	CS130-21.02-06.00-121418	Changed heading ‘Delete Stored Maintenance Data’ to ‘Delete Stored Maintenance Data Page’ and updated text accordingly; changed button to soft key (pge 45-100)
		Changed figure title ‘Delete Stored Maintenance Data and Maintenance Files Pages’ to ‘Delete Stored Maintenance Data and Delete Maintenance Files Pages (pge 45-101)
		Changed heading and figure title ‘View Loaded Maintenance Files’ to ‘View Loaded Maintenance Files Pages’; updated the text accordingly (pge 45-102)
46 Information Systems	CS130-21.02-06.00-121418	Deleted AIRCRAFT MAINT switch; changed maintenance switch to AIRCRAFT switch and channel switch to CHAN switch (pges 46-2, 46-3)
		Changed menu button to MENU pushbutton and data button to DATA pushbutton (pge 46-8)
		Deleted multifunction keyboard panel (pge 46-9)
		Changed main menu to MENU (pge 46-14)
		Changed ENTER button to ENTER pushbutton (pge 46-18)
		Changed heading ‘New or Misconfigured LRU/LRM’ to ‘Load New or Misconfigured LRU/LRM’; updated text and figure title accordingly (pges 46-22, 46-23)
		Changed ‘LRU or software set details’ to ‘LRU or software set details soft key’ (pge 46-24)
		Deleted scenario function (pge 46-26)
		Updated text (pge 46-30)
		Changed aircraft maintenance switch to AIRCRAFT switch and channel switch to CHAN switch (pge 46-32)
		Changed perform LRU/system operation menu to Perform LRU/System Operation option (pge 46-34)
		Corrected ‘...the HMU MAINTENANCE panel in the MAINT position.’ to ‘...the AIRCRAFT switch on the HMU maintenance panel in the MAINT position.’ (pge 46-36)

Copyright © Bombardier Inc.

ATA NAME AND NUMBER	CMUI NUMBER	CHANGES APPLIED
46 Information Systems (cont)	CS130-21.02-06.00-121418	Added bullets (pge 46-38)
		Changed aircraft maintenance switch to AIRCRAFT switch (pge 46-43)
		Changed REPORT subfunction to REPORT page (pge 46-44)
		Changed maintenance switch to AIRCRAFT switch in STATUS message table (pge 46-53)

Copyright © Bombardier Inc.

ATA 24 - Electrical Power

BD-500-1A10
BD-500-1A11

Table of Contents

24-00 Electrical Power Generation and Distribution System 24-2
General Information 24-2
24-20 AC Electrical Power Generation System 24-4
General Description 24-4
Component Location 24-6
Variable Frequency Generators 24-6
APU Generator 24-6
External Power Receptacle 24-6
Variable Frequency Generator Oil/Oil Cooler 24-8
Variable Frequency Generator Air/Oil Cooler 24-8
Pressure Surge Damper Ball 24-8
Generator Control Units 24-10
Overvoltage Protection Units 24-10
Component Information 24-12
VFG External View 24-12
Variable Frequency Generator Power Feeder Cables 24-14
Detailed Component Information 24-16
VFG Oil System 24-16
Controls and Indications 24-18
AC Power Generation Controls 24-18
Electrical Servicing Panel 24-18
AC Power Generation - Electrical Synoptic Page 24-20
Detailed Description 24-22
VFG Disconnect 24-22
Generator Control and Operation 24-24
External Power Operation 24-30
Monitoring and Tests 24-32
CAS Messages 24-33
Practical Aspects 24-36
VFG Servicing 24-36
VFG Removal and Installation 24-38
24-30 DC Power Generation 24-40
General Description 24-40
Component Location 24-42
Transformer Rectifier Unit 24-42
Battery Chargers 24-44
NiCad Batteries 24-44
Detailed Component Information 24-46
Transformer Rectifier Unit 24-46
Battery Charger 1 24-48
Battery Charger 2 24-50
Battery Heater 24-52
Controls and Indications 24-54
DC Power Generation - Controls 24-54
DC Power Generation - Electrical Synoptic Page 24-56
Detailed Description 24-58
Battery System 24-58
Monitoring and Tests 24-60
Battery Charger Test 24-60
CAS Messages 24-62
Practical Aspects 24-66
Battery Removal and Installation 24-66
24-33 Fly-By-Wire Power Converter System 24-68
General Description 24-68
Permanent Magnet Alternator Generator 24-68
Fly-By-Wire Power Converter 24-68

Copyright © Bombardier Inc.

Component Location 24-70
Permanent Magnet alternator Generator 24-70
Fly-By-Wire Power Converters 24-70
Detailed Component Information 24-72
Fly-By-Wire Power Converter 24-72
Monitoring and Tests 24-74
CAS Messages 24-75

24-02 Primary Power Distribution System 24-76

General Description 24-76
Component Location 24-78
Electrical Power Centers.....24-78
Bus Power Control Units.....24-80
Emergency Power Control 24-80
Detailed Component Information 24-82
Electrical Power Center 1 24-82
Electrical Power Center 1
Line Replaceable Components.....24-84
Electrical Power Center 2 24-86
Electrical Power Center 2
Line Replaceable Components.....24-88
Electrical Power Center 3 24-90
Electrical Power Center 3
Line Replaceable Units 24-92
Circuit Protective Device Detector 24-94
Bus Power Control Units.....24-96
Transformer Rectifier Unit Overcurrent.....24-96
Emergency Power Control 24-98
Controls and Indications 24-100
Electrical Panel and Synoptic Page 24-100
Operation 24-102
Normal Operation.....24-102
Transformer Rectifier Unit Failure Modes 24-124
Ground Service Mode 24-132
SMOKE Isolation using the BUS ISOL Switch 24-134
Detailed Description 24-142
Interrupt-Free DC ESSENTIAL BUS Operation 24-142
Differential Current Protection 24-144
Monitoring and Tests 24-150
CAS Messages 24-151

24-01 Secondary Power Distribution 24-152

General Description 24-152
Component Location 24-154
Control and Distribution Cabinets 24-154
Detailed Component Information 24-156
Control and Distribution Cabinet
Line Replaceable Module Assignment..... 24-156
Master and Satellite CDCs 24-158
Control and Distribution Cabinet
Internal Interface 24-160
Power Supply Comms Module 24-166
Discrete Input/Output Module 24-168
Junction Module LRM 24-170
Power Modules 24-172
Solid-State Power Controller 24-174
Load Management 24-176
Detailed Description 24-180
Control and Distribution Cabinet
Operating Modes..... 24-180
Data loading 24-184
Monitoring and Tests 24-186
CAS Messages 24-187
Practical Aspects 24-190
Control and Distribution Cabinet Maintenance..... 24-190

Copyright © Bombardier Inc.

24-70 Circuit Breaker Application 24-192
General Description 24-192
Operation 24-194
Maintenance Mode 24-194
Filtering and Sorting 24-196
Circuit Breaker Application Selections 24-198
Detailed Description 24-200
Circuit Breaker Panel 24-200
Monitoring and Tests 24-202
CAS Messages 24-203
Practical Aspects 24-204
Circuit Breaker Panel Maintenance 24-204

24-20 Electrical Emergency Generation System 24-206
General Description 24-206
Component Location 24-208
Ram Air Turbine Assembly 24-208
RAT Deployment Actuator 24-208
Stow Panel 24-208
RAT Generator Control 24-210
Emergency Power Control 24-210
Detailed Component Information 24-212
Ram Air Turbine Assembly 24-212
Deployment Actuator 24-214
RAT Blade Release 24-216
RAT Blade Locking 24-218
RAT Stow Abort Function 24-220
Controls and Indications 24-222
RAT Generator 24-222
Detailed Description 24-224
RAT Deployment 24-224
RAT Generator Control 24-226
Emergency Operation 24-228
Operation 24-234
RAT Stow 24-234
Monitoring and Tests 24-236
CAS Messages 24-237
Practical Aspects 24-238
RAT Ground Safety Pin Installation 24-238
RAT Servicing 24-240
RAT Ground Test 24-242

Copyright © Bombardier Inc.

List of Figures

Figure 1: Electrical Power Generation and Distribution System 24-3
Figure 2: AC Power Generation 24-5
Figure 3: Variable Frequency Generator, APU Generator, and External Power Receptacle 24-7
Figure 4: VFG Oil Coolers and Pressure Surge Damper Ball....24-9
Figure 5: Generator Control Unit and Overvoltage Protection Unit 24-11
Figure 6: Variable Frequency Generators (VFGs)....24-13
Figure 7: Variable Frequency Generator Power Feeder Cables....24-15
Figure 8: Variable Frequency Generator Oil System....24-17
Figure 9: Electrical AC Power Generation Controls 24-19
Figure 10: AC Power Generation - Electrical Synoptic Page....24-21
Figure 11: Variable Frequency Generator Disconnect Mechanism Electrical Block Diagram 24-23
Figure 12: Generator Control and Operation....24-25
Figure 13: Generator Lockout and Engine FIRE PBA 24-27
Figure 14: Overvoltage Protection Unit Operation....24-29
Figure 15: External Power Electrical Schematic....24-31
Figure 16: VFG Servicing 24-37
Figure 17: VFG Removal and Installation and Ground Support Equipment....24-39
Figure 18: DC Power Generation.... 24-41
Figure 19: Transformer Rectifier Units.... 24-43
Figure 20: Batteries and Battery Chargers 24-45
Figure 21: Transformer Rectifier Unit Block Diagram 24-47
Figure 22: Battery Charger 1 Functional Schematic.... 24-49
Figure 23: Battery Charger 2 Functional Schematic.... 24-51
Figure 24: Battery Heater Functional Schematic 24-53
Figure 25: DC Power Generation - Controls 24-55
Figure 26: DC Power Generation - Electrical Synoptic Page 24-57
Figure 27: Battery System Operation.... 24-59
Figure 28: Battery Charger Test 24-61
Figure 29: Battery Hoist 24-67
Figure 30: DC Power Generation – Permanent Magnet Alternator Generator and Fly-By-Wire Power Converter 24-69
Figure 31: Permanent Magnet Alternator Generator and Fly-By-Wire Power Converter 24-71
Figure 32: Fly-By-Wire Power Converter Detailed Block Diagram 24-73
Figure 33: Primary Power Distribution System 24-77
Figure 34: Electrical Power Centers 24-79
Figure 35: Bus Power Control Units and Emergency Power Control.... 24-81
Figure 36: Electrical Power Center 1 24-83
Figure 37: Electrical Power Center 1 Line Replaceable Components.... 24-85

Copyright © Bombardier Inc.

Figure 38: Electrical Power Center 2 24-87
Figure 39: Electrical Power Center 2 Line Replaceable Components 24-89
Figure 40: Electrical Power Center 3 24-91
Figure 41: Electrical Power Center 3 Line Replaceable Components 24-93
Figure 42: Circuit Protective Device Detector 24-95
Figure 43: Bus Power Control Units Block Diagram 24-97
Figure 44: Emergency Power Control Block Diagram 24-99
Figure 45: Primary Power Distribution Controls and Indications 24-101
Figure 46: Unpowered Aircraft 24-103
Figure 47: BATT 1 Switch Selected to AUTO 24-105
Figure 48: BATT 1 and BATT 2 Switches Selected to AUTO 24-107
Figure 49: External Power Online 24-109
Figure 50: External Power with APU Generator Online 24-111
Figure 51: APU Generator Online 24-113
Figure 52: APU Generator and Left VFG Online 24-115
Figure 53: Left VFG Online 24-117
Figure 54: Left and Right VFGs Online 24-119
Figure 55: External Power with Left VFG Online 24-121
Figure 56: External Power with Right VFG Online 24-123
Figure 57: TRU 1 Failure 24-125
Figure 58: TRU 3 Failure 24-127
Figure 59: TRU 1 and TRU 2 Failure 24-129
Figure 60: TRU 1 and TRU 3 Failure 24-131
Figure 61: Ground Service Mode 24-133
Figure 62: Main Transfer Inhibit with Both VFGs Online 24-135
Figure 63: BUS ISOL Switch in MAIN with Left VFG Online 24-137
Figure 64: BUS ISOL Switch in Main with Right VFG Online 24-139
Figure 65: Essential Transfer Inhibit with Both VFGs Online 24-141
Figure 66: Interrupt-Free DC ESS BUS Operation 24-143
Figure 67: EPC 1 and EPC 2 Differential Protection 24-145
Figure 68: EPC 3 Differential Protection 24-147
Figure 69: Tie Bus Differential Protection 24-149
Figure 70: Secondary Power Distribution 24-153
Figure 71: Control and Distribution Cabinets 24-155
Figure 72: CDC Line Replaceable Module Assignments 24-157
Figure 73: Master and Satellite CDCs 24-159
Figure 74: Control and Distribution Cabinets 1 and 2 Micro-Comms and Power Supply-Comms Modules 24-161
Figure 75: Control and Distribution Cabinets 1 and 2 Discrete Input/Output and Junction Modules 24-163
Figure 76: Control and Distribution Cabinets 3, 4, and 5 Block Diagram 24-165
Figure 77: Power Supply-Comms Module 24-167
Figure 78: Discrete Input/Output Line Replaceable Module Block Diagram 24-169

Copyright © Bombardier Inc.

Figure 79: Junction Module Line Replaceable Module 24-171
Figure 80: Power Module Block Diagram 24-173
Figure 81: Solid-State Power Controller Block Diagram 24-175
Figure 82: Normal Operation - SSPC - Wing Anti-Ice Example 24-183
Figure 83: Control and Distribution Cabinet Software Loading 24-185
Figure 84: Control and Distribution Cabinet Maintenance 24-191
Figure 85: Circuit Breaker Application 24-193
Figure 86: Maintenance Mode Operation 24-195
Figure 87: Circuit Breaker Application Sort and Filter Control 24-197
Figure 88: Circuit Breaker Application Selection Navigation 24-199
Figure 89: Circuit Breaker Panel Electrical Schematics 24-201
Figure 90: Circuit Breaker Replacement 24-205
Figure 91: Electrical Emergency Generation System 24-207
Figure 92: Ram Air Turbine System, Deployment Actuator, and Stow Panel 24-209
Figure 93: RAT Generator Control and Emergency Power Control 24-211
Figure 94: Ram Air Turbine Assembly 24-213
Figure 95: RAT Deployment Actuator 24-215
Figure 96: RAT Blade Release 24-217
Figure 97: RAT Locking Plunger 24-219
Figure 98: RAT Stow Abort Function 24-221
Figure 99: RAT Generator Control and Indications 24-223
Figure 100:RAT Deployment 24-225
Figure 101:RAT Generator Control 24-227
Figure 102:Ram Air Turbine Generator Online 24-229
Figure 103:Ram Air Turbine Generator with Left VFG Online 24-231
Figure 104:Ram Air Turbine Generator with Both VFGs Online 24-233
Figure 105:RAT Stow Operation 24-235
Figure 106:RAT Safety Pin Installation 24-239
Figure 107:RAT Servicing 24-241
Figure 108:Ground Test Back Drive Unit Attachment 24-243

Copyright © Bombardier Inc.

Page Intentionally Left Blank

Copyright © Bombardier Inc.

ELECTRICAL POWER - CHAPTER BREAKDOWN

1. Electrical Power Generation System
   - AC Power Generation
   - DC Power Generation
2. Power Distribution System
   - Primary Power Distribution
   - Secondary Power Distribution
3. Emergency Electrical Generation System

24-00 ELECTRICAL POWER GENERATION AND DISTRIBUTION SYSTEM

GENERAL INFORMATION

The electrical power generation and distribution system has two bus power control units (BPCUs) and three electrical power centers (EPCs) that house the system distribution buses, power contactors, circuit breakers, transformer rectifier units (TRUs), and the emergency power control (EMPC).

The system switches AC power from the power sources to the appropriate AC electrical buses, and through the TRUs to the DC electrical power buses. The primary distribution system controls and reconfigures the distribution system in response to system logic or operator input.

During normal operation, the system operates in a split bus configuration with AC BUS 1 isolated from AC BUS 2. In the event of a failure of one of the variable frequency generators (VFGs), a combination of three bus tie contactors can be closed to either allow for connection of AC BUS 1 to AC BUS 2, or to allow the APU generator to replace the inoperative VFG.

The system provides a load management function that can shed nonessential loads in order to avoid sustained overloads when the load demand exceeds the available online source capacity.

Copyright © Bombardier Inc.

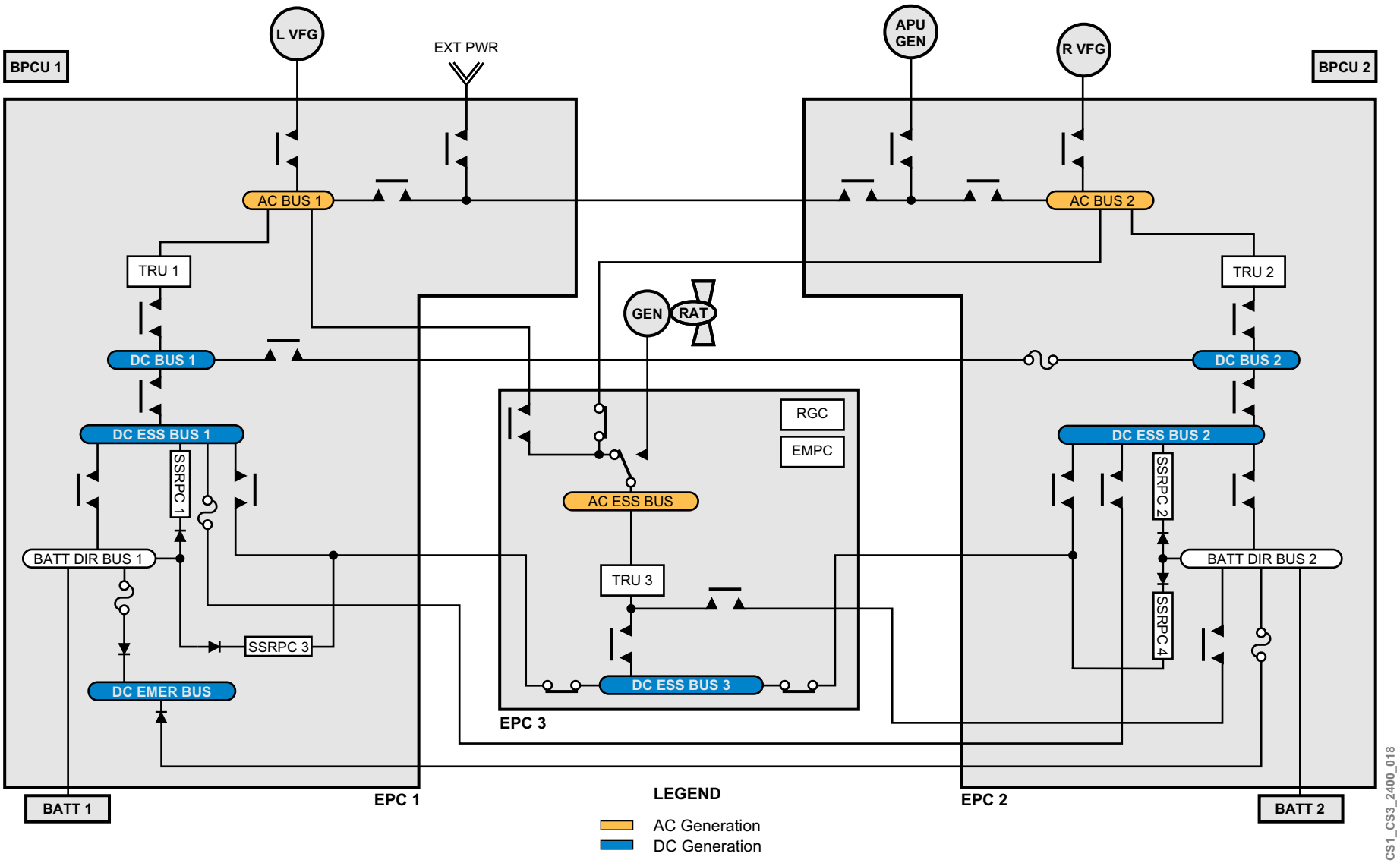

Figure 1: Electrical Power Generation and Distribution System

24-20 AC ELECTRICAL POWER GENERATION SYSTEM

GENERAL DESCRIPTION

The AC electrical power generation system (EPGS) includes the normal AC power sources, and the control units that control the AC power supply to the electrical power centers (EPCs).

The electrical system architecture is consists of the following three operating channels, each centered on an electrical power center (EPC):

- Left main channel - centered around EPC 1, comprises the electrical system components on the left side of the aircraft. It includes the left variable frequency generator (VFG), external power, as well as the units that provide monitoring and control of this channel
- Right main channel - centered around EPC 2, comprises the electrical system components on the right side of the aircraft. It includes the right VFG, APU generator, as well as the units that provide monitoring and control of this channel
- The emergency, or alternate channel - centered around EPC 3, is explained in detail in primary power distribution and emergency electrical generation system

Each of the VFGs and the APU generator has a dedicated generator control unit (GCU). All GCUs are identical, and are identified with their installed positions, by using the programming pin configuration.

The generator control units (GCUs) report faults to the onboard maintenance system (OMS) and the aircraft health management system (AHMS).

Each generator has an associated overvoltage protection unit (OPU) that works in series with the GCU.

The OPU provides a redundant overvoltage (OV) protection when the GCU voltage regulation and protection function fails. The OPU communicates solely with its associated GCU.

The status of the AC electrical power generation system is displayed on the EICAS and the electrical synoptic page.

Copyright © Bombardier Inc.

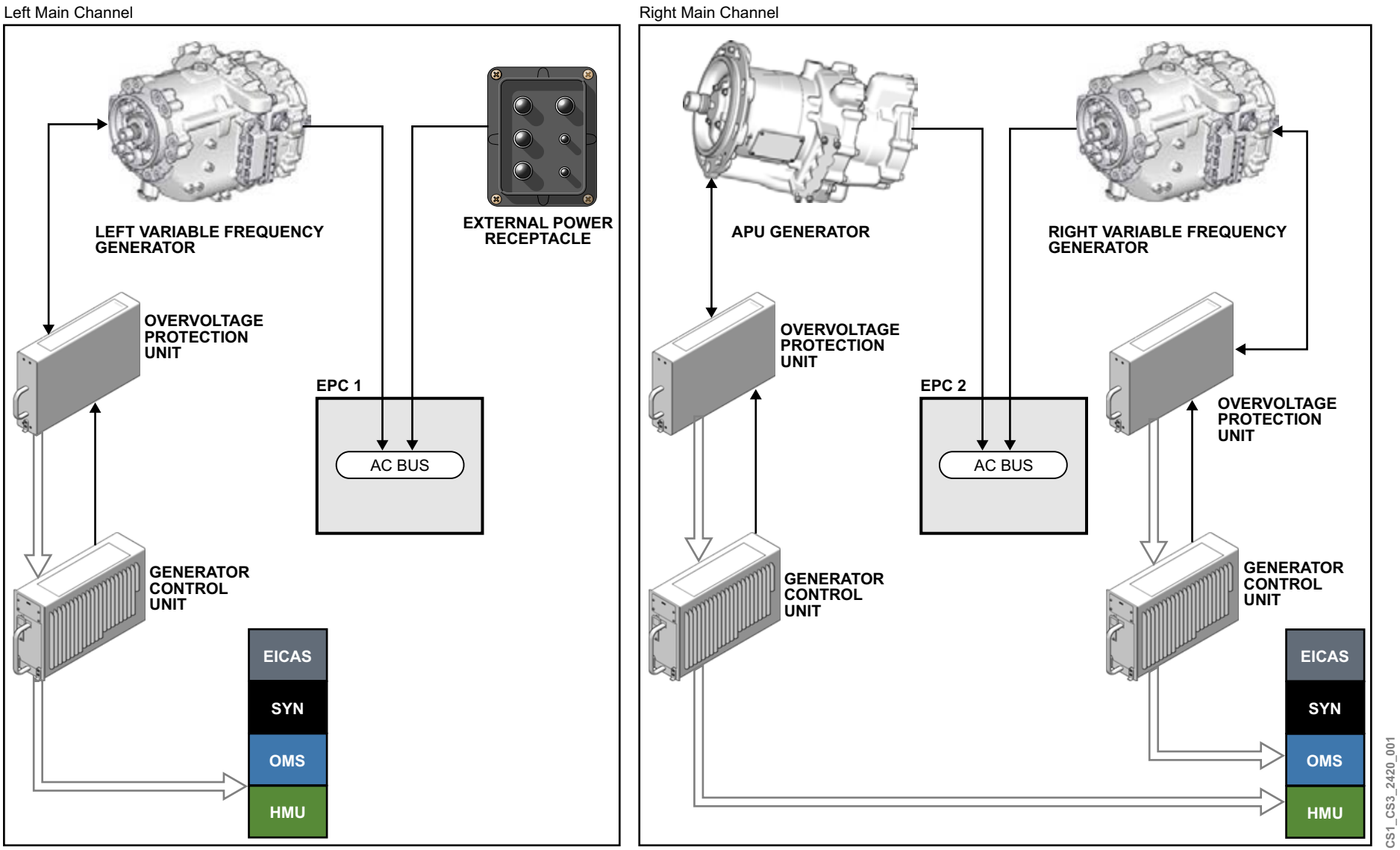

Figure 2: AC Power Generation

Copyright © Bombardier Inc.
CS130-21.02-06.00-121418

COMPONENT LOCATION

The AC electrical power generation components include the following:

- Variable frequency generators (VFGs)
- Auxiliary power unit (APU) generator
- External AC power receptacle
- Variable frequency generator (VFG) oil/oil cooler (Refer to figure 4)
- Variable frequency generator (VFG) air/oil cooler (Refer to figure 4)
- Pressure surge damper ball (Refer to figure 4)
- Generator control units (GCUs) (Refer to figure 5)
- Overvoltage protection units (OPUs) (Refer to figure 5)

VARIABLE FREQUENCY GENERATORS

Two variable frequency generators (VFGs) are mounted on either engine main gearbox.

APU GENERATOR

The auxiliary power unit (APU) generator is mounted on the APU gearbox.

EXTERNAL POWER RECEPTACLE

External power is connected to the aircraft through a standard 6-pin external power receptacle, located on the lower left forward fuselage.

Copyright © Bombardier Inc.

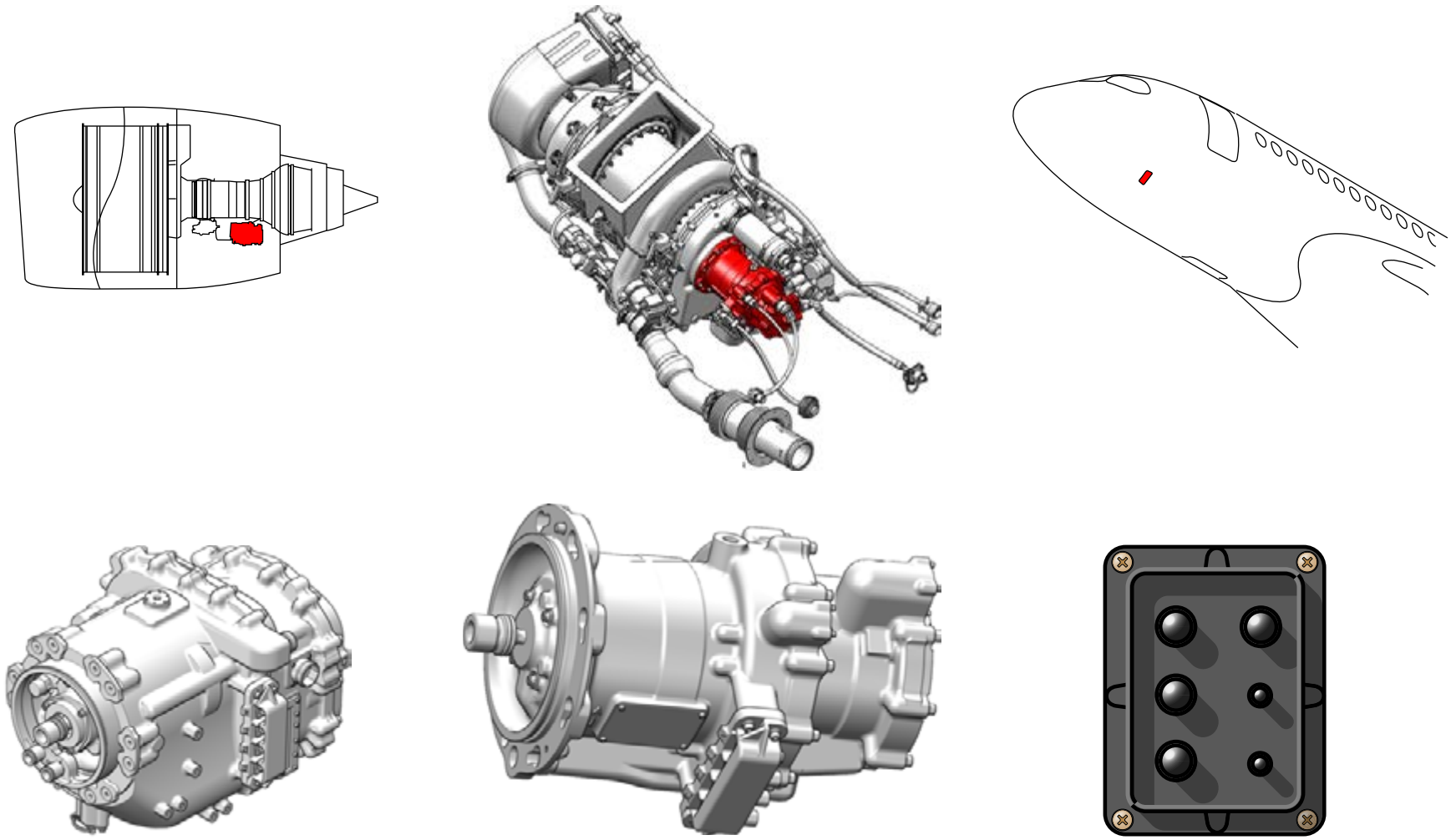

Figure 3: Variable Frequency Generator, APU Generator, and External Power Receptacle

VARIABLE FREQUENCY GENERATOR OIL/OIL COOLER

The variable frequency generators (VFGs) oil/oil cooler is located on top of the fuel/oil manifold.

VARIABLE FREQUENCY GENERATOR AIR/OIL COOLER

The VFG air/oil cooler is located on the fan intermediate case at the 7 o'clock position.

PRESSURE SURGE DAMPER BALL

The pressure surge damper ball is connected between the VFG and the oil/oil cooler.

Copyright © Bombardier Inc.

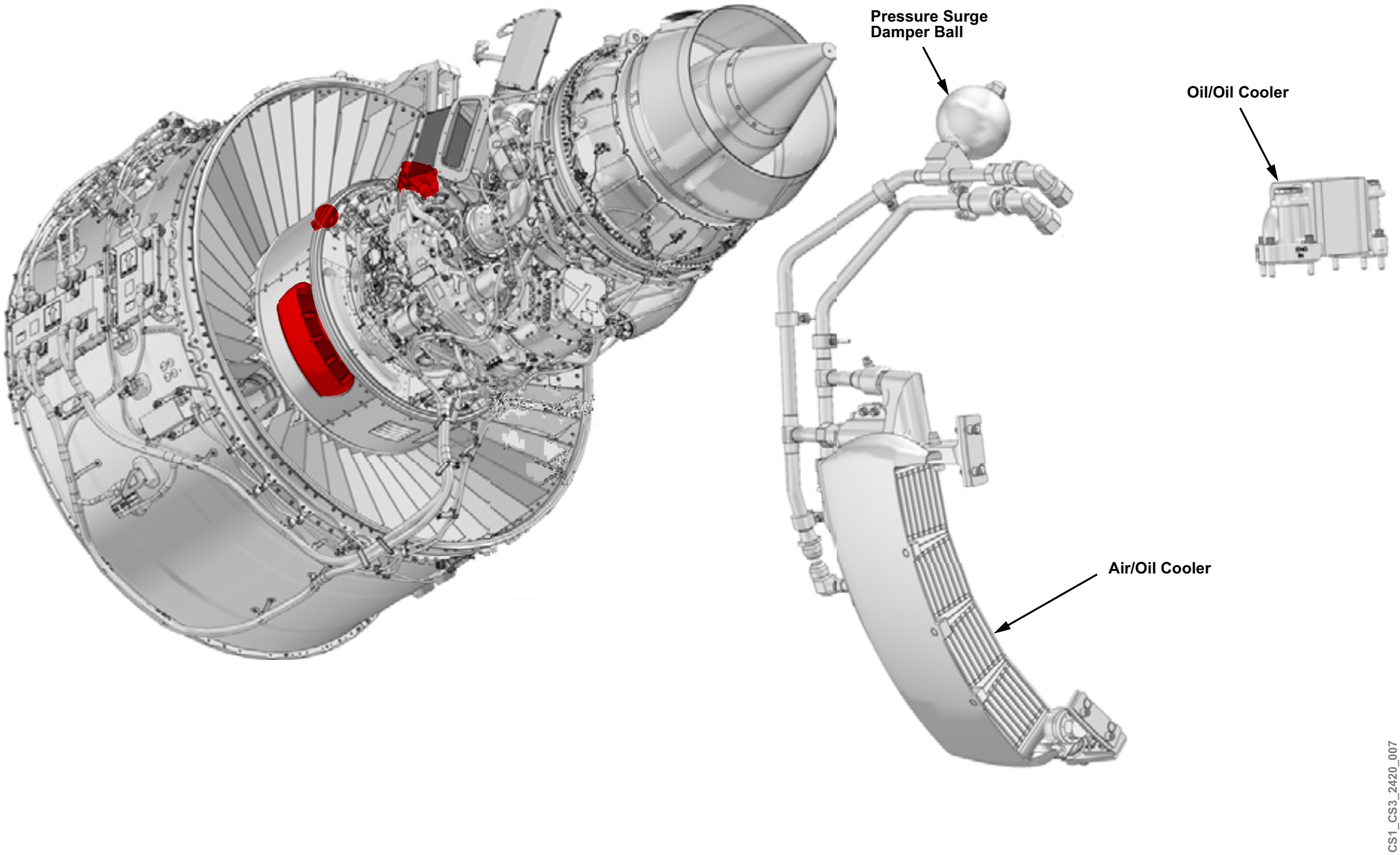

Figure 4: VFG Oil Coolers and Pressure Surge Damper Ball

Copyright © Bombardier Inc.

GENERATOR CONTROL UNITS

All three generator control units (GCUs) are located in the mid equipment bay.

OVERVOLTAGE PROTECTION UNITS

All three overvoltage protection units (OPUs) are located in the mid equipment bay.

Copyright © Bombardier Inc.

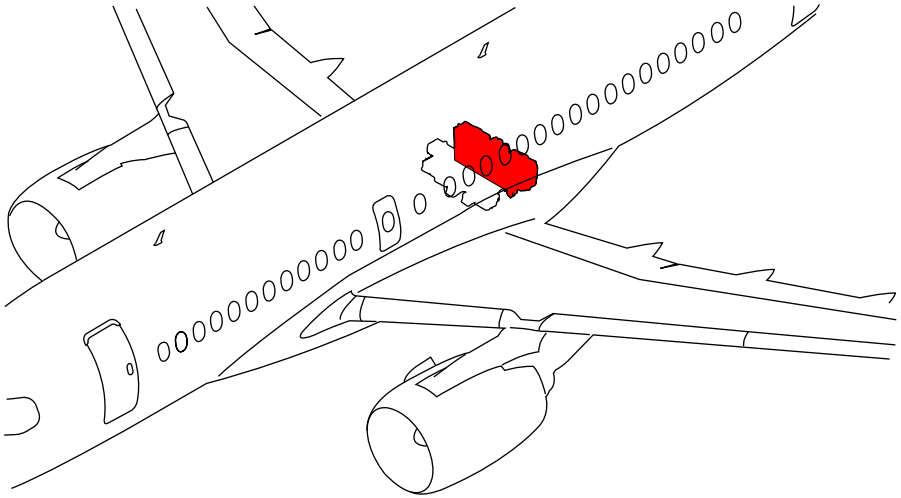

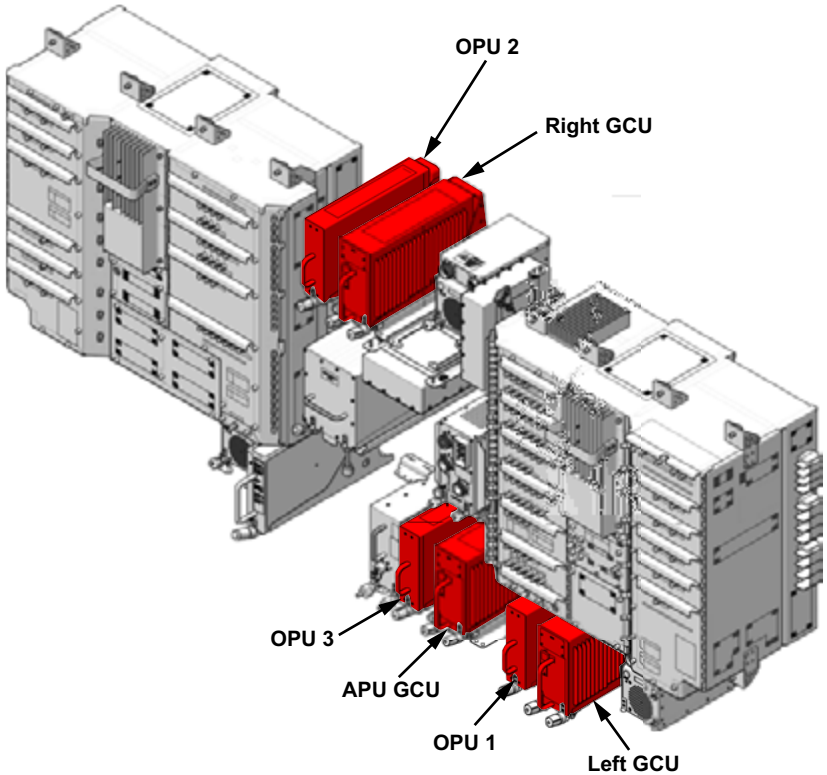

MID EQUIPMENT BAY
(LOOKING AFT)

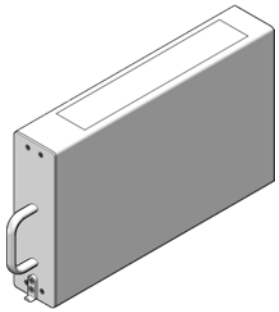

OVERVOLTAGE PROTECTION UNIT (OPU)

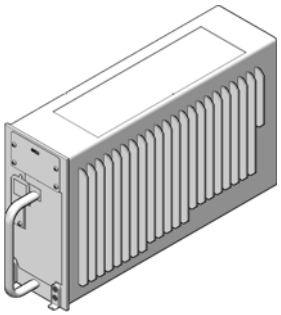

GENERATOR CONTROL UNIT (GCU)

CS1_CS3_2420_003

Figure 5: Generator Control Unit and Overvoltage Protection Unit

Copyright © Bombardier Inc.

COMPONENT INFORMATION

VFG EXTERNAL VIEW

A lifting lug is located at the top of the VFG for the installation of a lifting eye. The lifting eye allows a hoist to lift the VFG onto the support fixture needed to raise the VFG into position for installation.

The disconnect reset ring is secured with a screw that must be removed before resetting the VFG.

The VFG has the following external features:

- J1 and J2 electrical connectors
- Sight glass
- Filter cover
- Servicing ports

Copyright © Bombardier Inc.

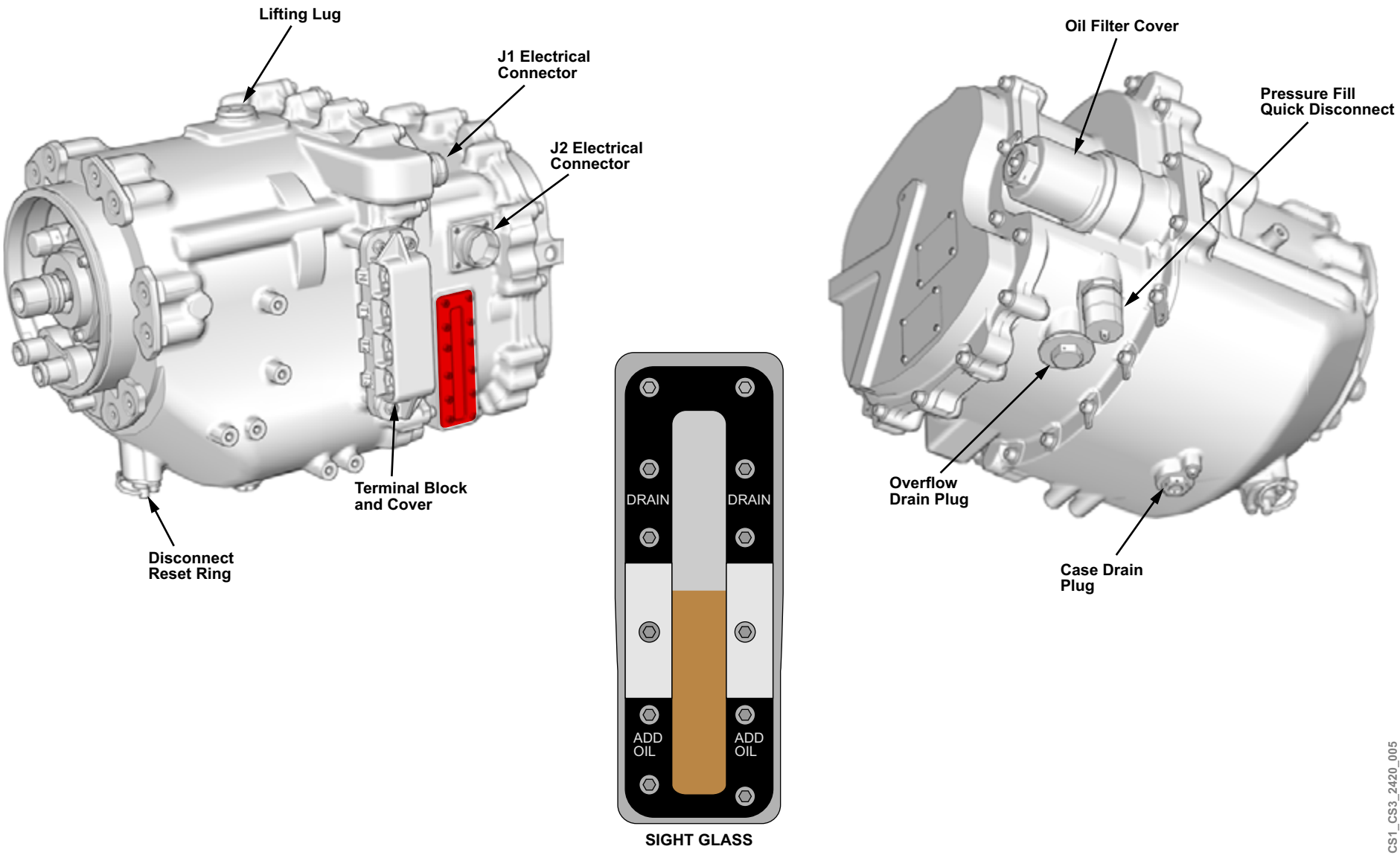

Figure 6: Variable Frequency Generators (VFGs)

VARIABLE FREQUENCY GENERATOR POWER FEEDER CABLES

The VFG 3-phase output is carried over four power feeder cables to a pylon power feeder terminal.

The power feeder terminal is located within a conduit assembly, which is cooled by fan discharge air.

Copyright © Bombardier Inc.

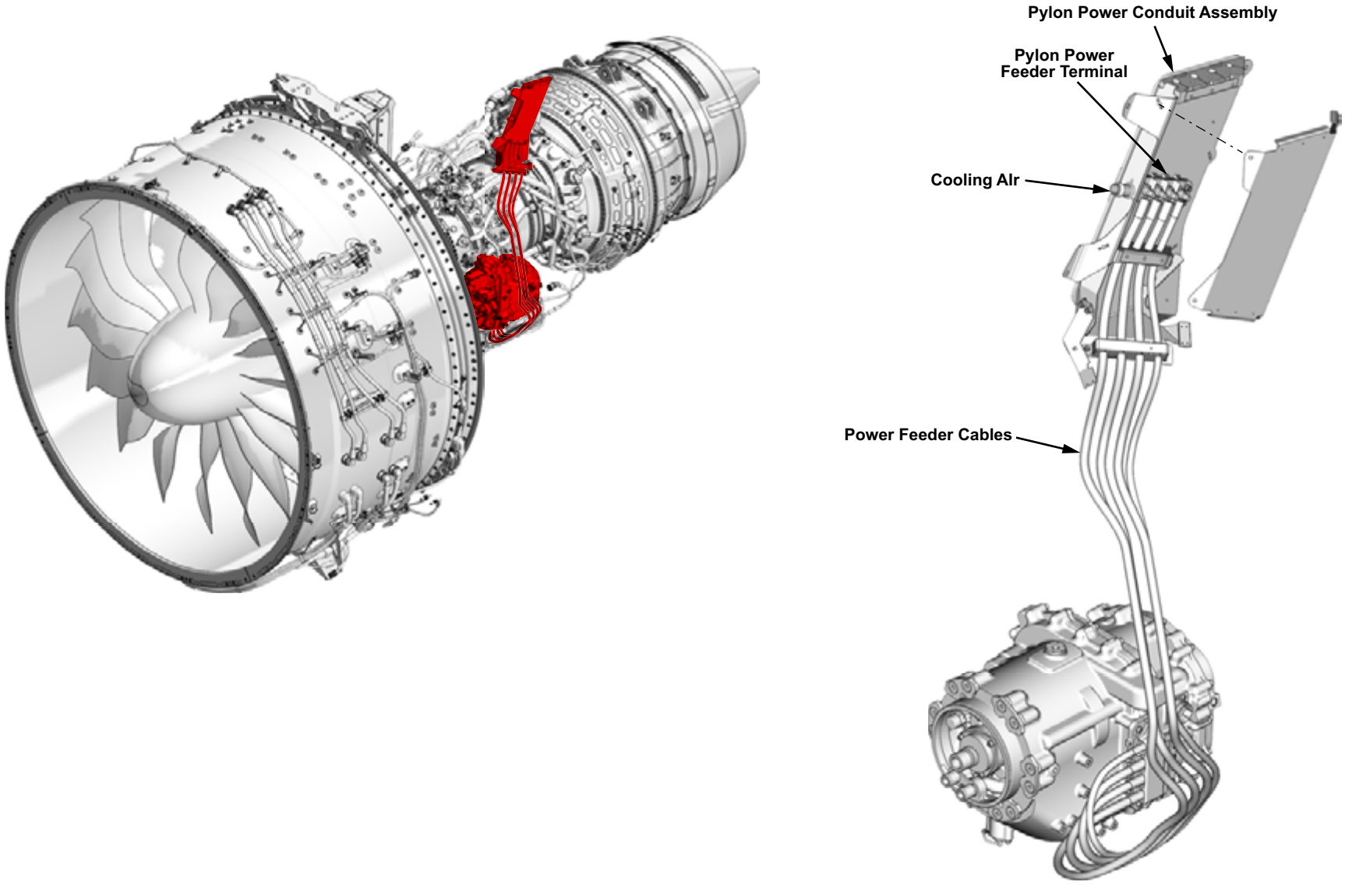

Figure 7: Variable Frequency Generator Power Feeder Cables

Copyright © Bombardier Inc.

DETAILED COMPONENT INFORMATION

VFG OIL SYSTEM

The VFG uses a self-contained oil circuit consisting of a pump, pressure-regulating valve, bypass valve, filter, and monitoring sensors to provide generator cooling and lubrication.

The VFG case has pressure fill and overflow drain ports for oil servicing and a case drain to drain the VFG oil. The VFG case overpressure relief valve limits VFG case pressure to 35 psi.

The pump draws oil from the case. The pump output is regulated to 125+ 30 psi by the pressure-regulating valve. The oil is filtered by a replaceable oil filter. A bypass valve routes oil back to the pump inlet if the oil filter is clogged. The oil is then cooled before being supplied to the generator for cooling and lubrication.

The external cooling circuit consists of an oil-oil cooler and the air-oil cooler. Each cooler has a pressure-regulating valve (PRV) to allow oil to bypass the cooler during cold conditions. Oil flows from the oil out port, through the external circuit, and back to the oil-in port. Oil pressure in the external circuit is limited to 450 psi maximum by the VFG bypass valve. A pressure surge damper ball absorbs pressure spikes in the VFG oil circuit.

A sight glass provides visual indication of oil level in the VFG during maintenance and inspection.

The remote oil level sensor (ROLS) monitors the VFG oil level. The generator control units (GCUs) samples oil level every 6 minutes on the ground with the engine not running. A L(R) GEN OIL LEVEL INFO message is displayed if oil servicing is required.

A low oil pressure (LOP) switch monitors the pressure within the VFG. The switch opens at 50 psi and closes at 30 psi. A temperature bulb is located at the pump discharge core to provide the temperature of oil being pumped into the external circuit.

The associated L(R) DISC PBA amber OIL legend illuminates, and a L(R) GEN LO OIL caution crew alerting system (CAS) message, if the oil pressure is below 30 psi or the oil temperature above 173°C (278°F) and the VFG is not disconnected.

The differential pressure (ΔP) switch closes at an increasing pressure of 78 psid, indicating a clogged filter with an impending bypass. The switch opens at a decreasing pressure of 56 psid. A L(R) GEN OIL HI DELTA P INFO message is displayed for this condition. The GCU inhibits the warning of high ΔP at oil temperatures below 56°C (132°F).

Copyright © Bombardier Inc.

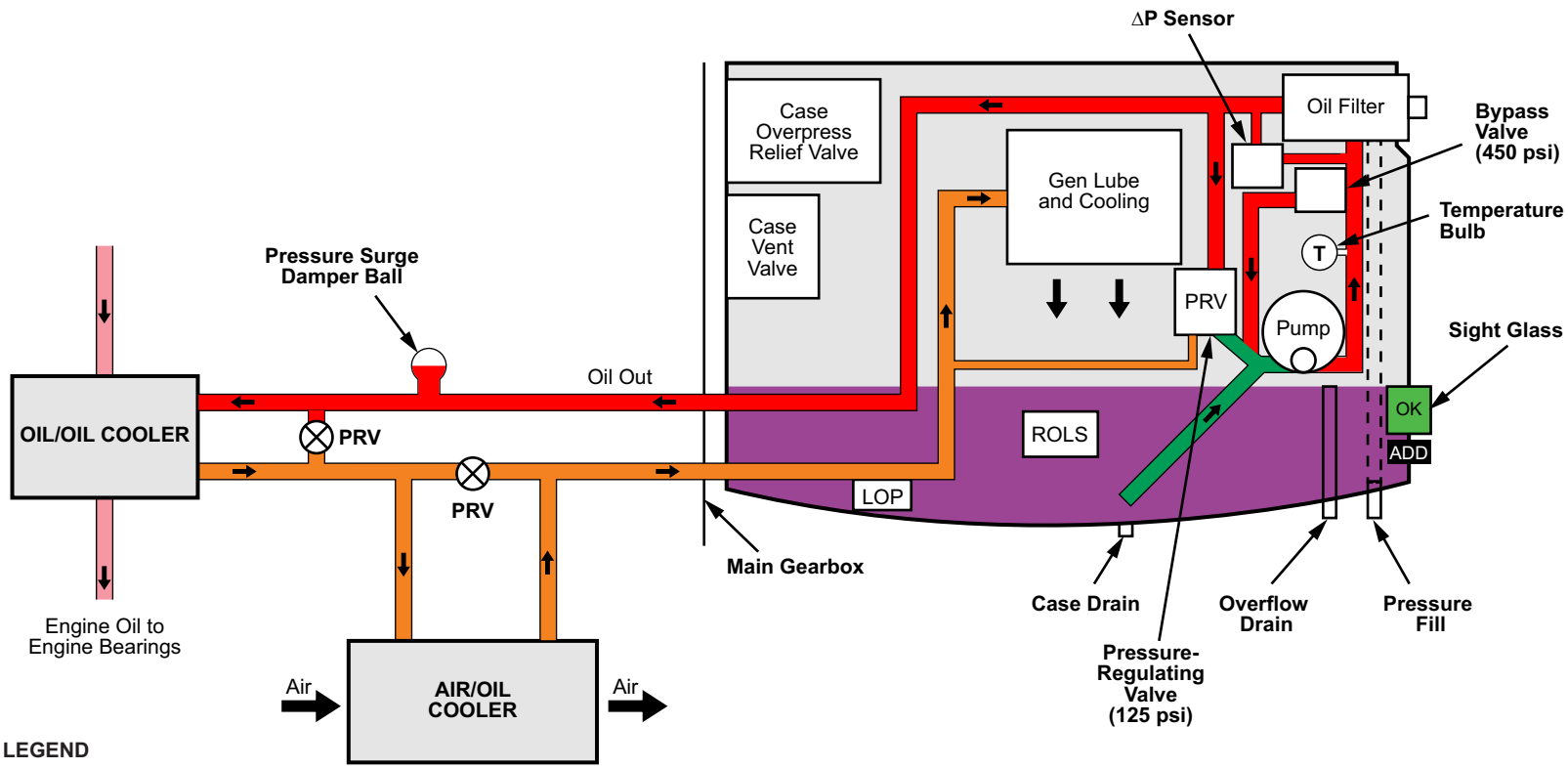

LEGEND

- Engine Oil
- Cooled VFG Oil
- Hot VFG Oil
- Suction
- VFG Oil
- ΔP Differential Pressure
- LOP Low Oil Pressure Switch
- PRV Pressure-Regulating Valve
- ROLS Remote Oil Level Sensor

CONDITION	VALUE	CAS MESSAGE	INFO MESSAGE
Low Pressure	< 30 PSIG	GEN OIL	
High Temperature	> 173°C (278°F)	GEN OIL	
ΔP	> 78 PSID	ELECTRICAL FAULT	L(R) GEN OIL HI DELTA P
Low Level	---	ELECTRICAL FAULT	L(R) GEN OIL LO LEVEL

CS1_CS3_2420_006

Figure 8: Variable Frequency Generator Oil System

CONTROLS AND INDICATIONS

AC POWER GENERATION CONTROLS

The ELECTRICAL panel provides control of AC power generation components, including the following:

- Main generator, including disconnect
- APU generator
- External power

ELECTRICAL SERVICING PANEL

The electrical servicing panel contains the external AC receptacle and the electrical/towing service panel.

The external AC connection permits the connection of a standard 115/200 VAC, 400 Hz, electrical ground support equipment.

The electrical/towing service panel is a multi-purpose panel. It is used on the ground when connecting external power. Battery and external power switches and indications are provided.

Copyright © Bombardier Inc.

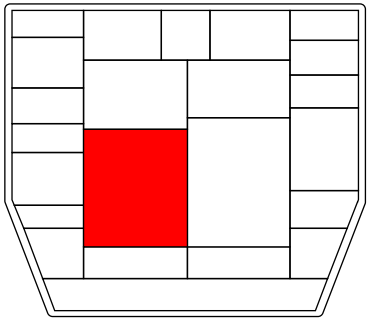

OVERHEAD PANEL

ELECTRICAL PANEL

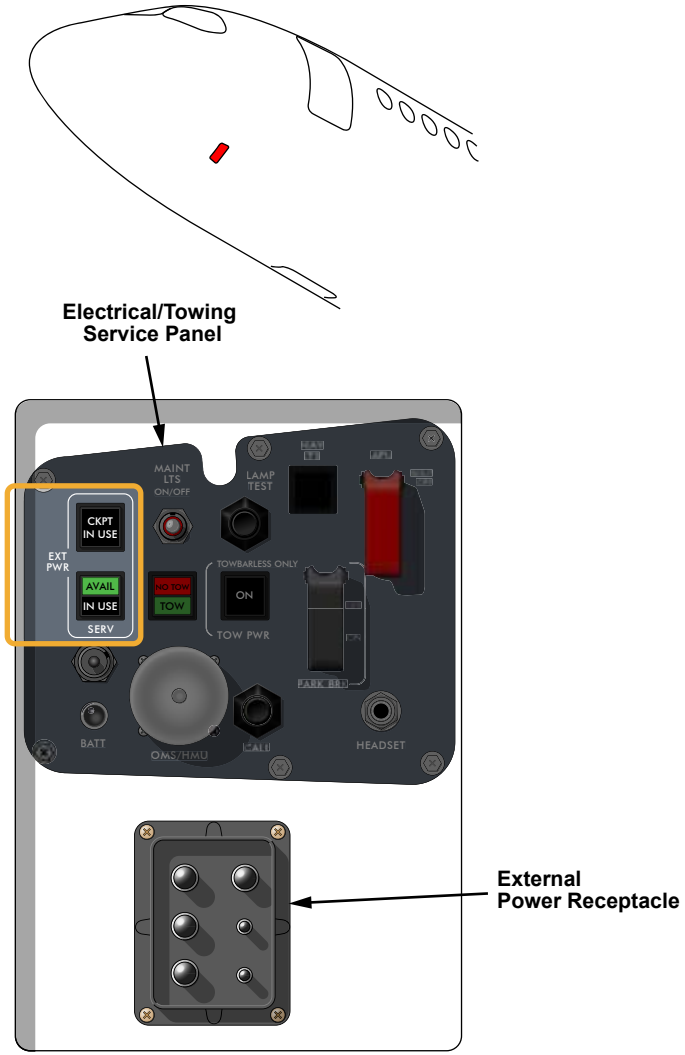

ELECTRICAL SERVICE PANEL

CS1_CS3_2420_009

Figure 9: Electrical AC Power Generation Controls

AC POWER GENERATION - ELECTRICAL SYNOPTIC PAGE

The ELECTRICAL synoptic page provides a dynamic representation of the status of the electrical power generation and distribution system. The AC elements are displayed on the lower portion. Colored flow lines indicate the status of power between the various elements.

The following information related to AC power is displayed:

- Status of the engine-driven variable frequency generators (VFGs) - (identified as L GEN and R GEN)
- APU generator
- External power
- AC BUS 1, AC BUS 2, and the AC ESS BUS

To declutter the synoptic page, the following elements will be removed from display when they are no longer required:

- APU generator and status
- External power status

Copyright © Bombardier Inc.

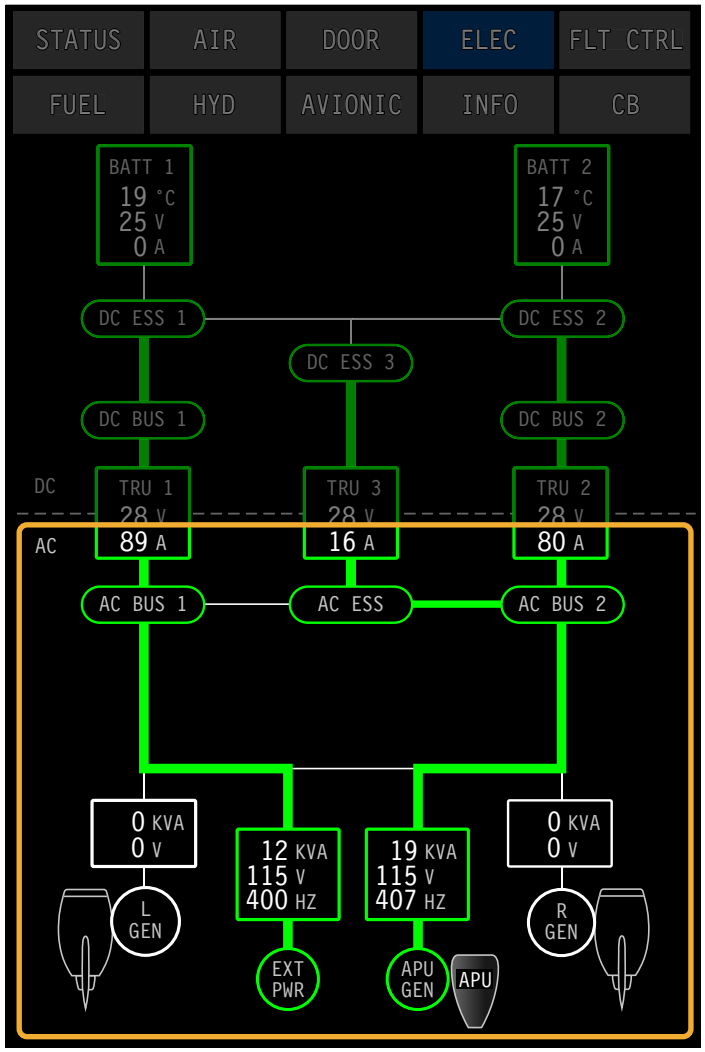

SYNOPTIC PAGE - ELECTRICAL

ENGINE REPRESENTATION (MANAGED BY FADEC AND ECU)

Symbol	Condition
APU	Running
APU	Not running
APU	Invalid

FLOW LINES

Symbol	Condition
	Powered
	Not powered
	Invalid

GEN STATUS AND ASSOCIATED BOXOUT

Symbol	Condition
0 KVA 115 V 400 Hz; L GEN; L GEN DISC	- Not operating - Disconnect
0 KVA 115 V 400 Hz; APU GEN	Failed
0 KVA 115 V 400 Hz; EXT GEN	Invalid
0 KVA 115 V 400 Hz; R GEN	Operating

CURRENT, VOLTAGE, FREQUENCY, PWR RATING READOUTS

Symbol	Condition
44 A	Abnormal
28 V	Normal
-- KVA	Invalid

DECLUTTERED SYMBOLOGY LOGIC

Symbol	Condition
0 KVA 115 V 400 Hz; EXT PWR	Displayed only when external AC frequency is detected or control logic is invalid.

BUS STATUS

Symbol	Condition
AC BUS 1	Powered
AC BUS 1	Failed
AC BUS 1	Disconnected
AC BUS 1	Invalid

DECLUTTERED SYMBOLOGY LOGIC

Symbol	Condition
73 KVA 115 V 400 Hz; APU GEN; APU	Displayed only when APU is running or control is invalid.

CS1_CS3_2420_011

Figure 10: AC Power Generation - Electrical Synoptic Page

DETAILED DESCRIPTION

VFG DISCONNECT

The VFG disconnect mechanism disengages the VFG from the VFG input shaft and engine gearbox. If low VFG oil pressure or high oil temperature is detected while the VFG is in operation, the associated DISC PBA amber OIL light illuminates. The L(R) GEN OIL caution message is also displayed. The low oil pressure indication is inhibited during a VFG underspeed condition.

The VFG manual disconnect is accomplished by selecting the DISC PBA on the ELECTRICAL panel. The PBA commands the GCU to:

- Energize the disconnect solenoid, which activates a clutch to disengage the VFG
- De-excite the generator

When the aircraft is in air mode, the DISC PBA will not disconnect the VFG unless a high oil temperature or low oil pressure condition exists.

NOTE

The DISC PBA should not be pressed for more than 3 seconds.

The GCU compares the VFG PMG frequency to the engine speed to determine if the VFG has disconnected. When the VFG disconnects, the DISC legend in the DISC PBA illuminates and the corresponding GEN DISC white status message is displayed. A DISC icon is displayed below the generator on the ELECTRICAL synoptic page. The amber FAIL light in the associated GEN PBA illuminates and the corresponding GEN FAIL amber caution message is displayed.

NOTE

If the DISC PBA is pressed on the ground with the engine not running, and the disconnect mechanism not reset, the DISC light will not illuminate until the engine reaches idle speed.

If electrically actuated, the VFG disconnect can be reset through a manual reset feature provided on the VFG. The disconnect is capable of being reset at an input speed between 0 and 100 rpm.

NOTE

It is recommended to remove the VFG if it has been disconnected for a high oil temperature or low oil pressure.

The VFG has a thermal disconnect mechanism. The thermal disconnect occurs when the oil-out temperature exceeds 204ºC (400ºF). A eutectic solder plug melts, actuating the disconnect mechanism. The indications of a thermal disconnect will be the same as for a manual disconnect. A thermal disconnect cannot be reset and requires the replacement of the VFG.

Copyright © Bombardier Inc.

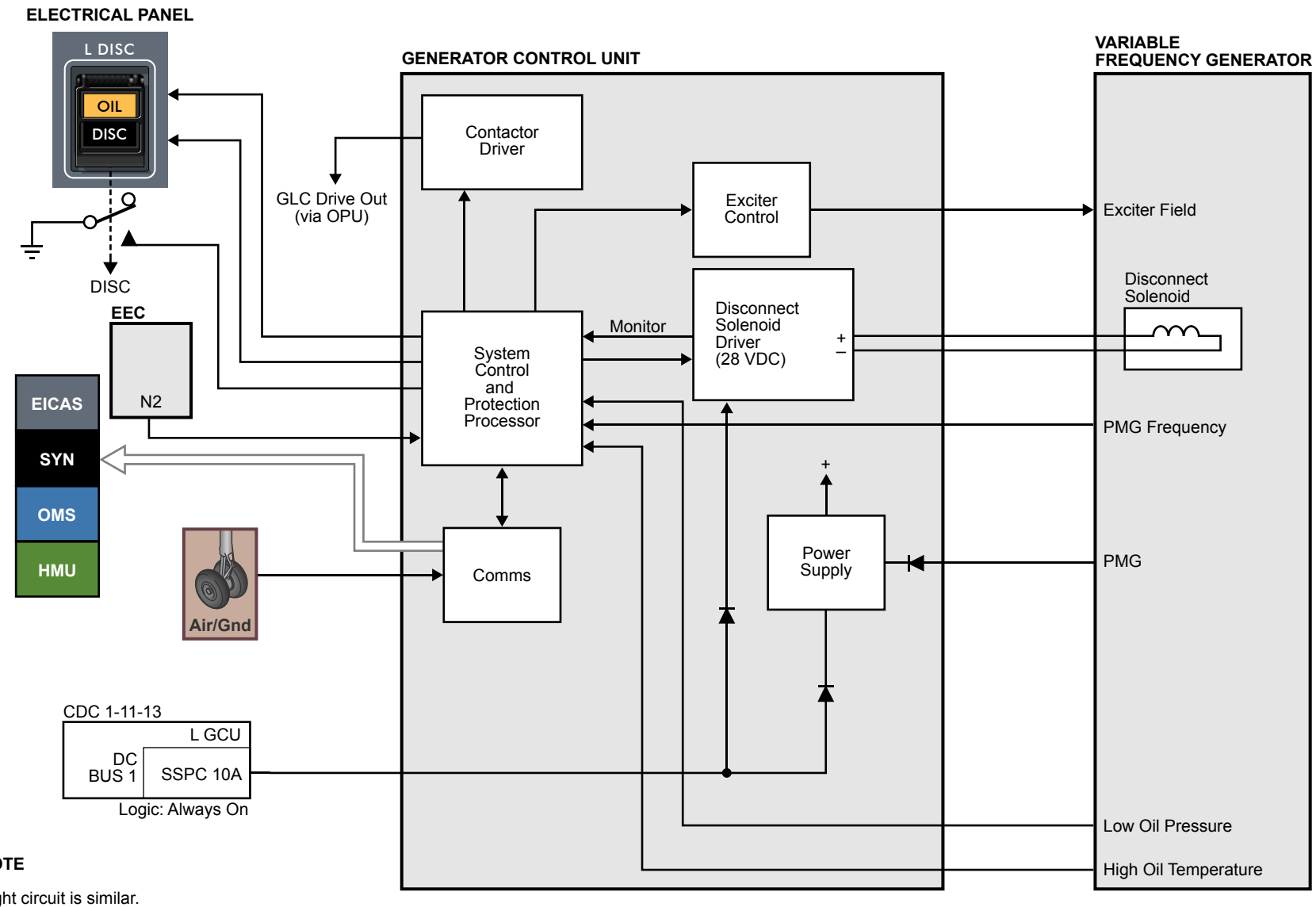

NOTE

Right circuit is similar.

CS1_CS3_2420_014

Figure 11: Variable Frequency Generator Disconnect Mechanism Electrical Block Diagram

GENERATOR CONTROL AND OPERATION

The primary function of the GCU is the control and protection of its associated generating channel.

The GCU also provides coordination with the associated overvoltage protection unit (OPU) to protect the system in the event of an overvoltage condition.

The generator control switches are normally in the ON position. Thus, once the generator is producing power that complies with the power requirements, the GCU automatically closes the associated line contactor and provides power to the AC BUS.

The GCU regulates the generator output voltage to 115 V at the point of regulation (POR). If the GCU voltage regulation fails and causes the voltage to exceed the protection thresholds, the GCU voltage protection function opens the GCU generator control relay (GCR) and generator line contactor (GLC). This turns off the generator and takes it offline.

The GCU voltage regulation and protection functions are independent of each other. The same process occurs for the following protection functions:

- Undervoltage (UV)
- Over and underfrequency (OF and UF)
- Phase sequence (phase rotation)
- Overcurrent (OC)
- Overcurrent with underspeed
- Differential protection (DP)
- Delta current
- Shorted rotating diode
- Open phase
- Generator lockout and fire switch (left and right GCUs only)

Copyright © Bombardier Inc.

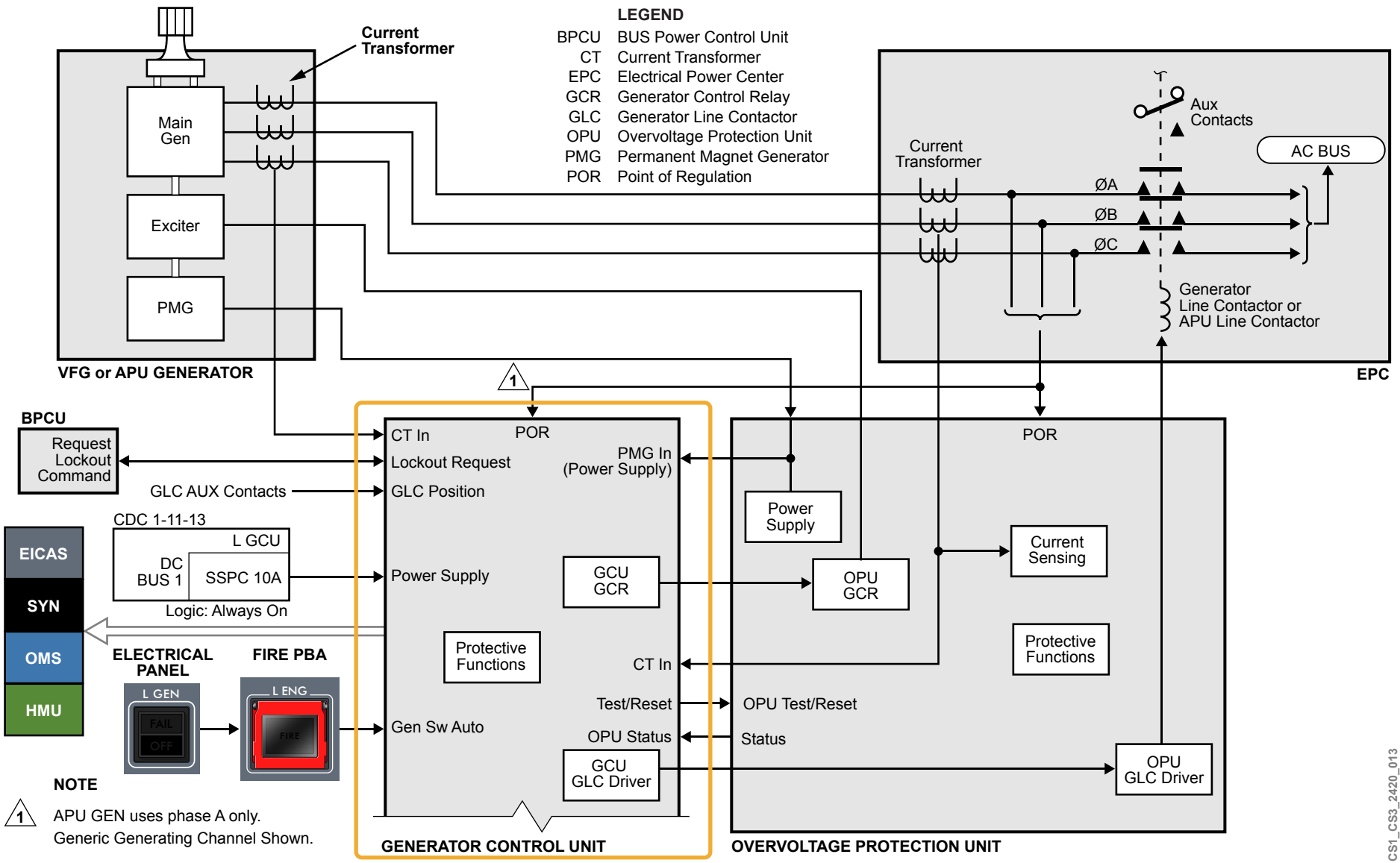

Figure 12: Generator Control and Operation

GCU Protection Trip Reset and GCU Power Supplies

After a fault has triggered the generator protective functions, the GCU is reset by cycling the GEN PBA on the ELECTRICAL panel, or by a cold start of the GCU.

The left GCU receives power for operation from the left VFG PMG via OPU 1 (primary source) and DC BUS 1. The source from DC BUS 1 is provided from a solid-state power controller (SSPC) in CDC 1.

The right GCU receives power for operation from the right VFG PMG via OPU 2 (primary source) and DC BUS 2. The source from DC BUS 2 is provided from an SSPC in CDC 2.

The APU GCU (AGCU) receives power for operation from the APU PMG via OPU 3 (primary source) and DC BUS 1. The source from DC BUS 1 is provided from an SSPC in CDC 1.

Generator Lockout and L(R) ENG FIRE Pushbutton Annunciator

The left and right GCUs monitor the digital lockout request signals from their associated bus power control units (BPCUs). When this occurs, the GCU de-excites the generator and opens the associated line contactor. The BPCU requested lockout signal is inhibited if the VFG current is less than a set value, and the associated VFG is online.

The L(R) ENG or APU FIRE pushbutton annunciator (PBA) is wired in series with the associated GEN PBA for the GCU. If the L(R) ENG or APU FIRE PBA is depressed, the GCU de-excites the generator and uses the same control logic defined for the L(R) ENG or APU GEN PBA to open the associated line contactor.

The GCUs also provide commands to the BPCUs to open and isolate contactors in the primary AC power distribution network for specific GCU protective functions.

Overcurrent

An overcurrent (OC) condition overrides undervoltage protection. An overcurrent condition opens the associated bus tie contactor (BTC) for left and right GCUs only, and requests the associated BPCU to lockout the associated BTC. The OC trip curve provides an inverse time delay to maximize the OC time as long as possible, while not exceeding the generator thermal characteristics

Delta Current Protection

The delta current protection detects a difference in the generator CT phase currents and POR voltage due to unbalanced loading. When this occurs, the GCU opens the associated generator line contactor (GLC) for left and right GCUs only, and requests its associated BPCU to lockout the associated BTC. Doing so inhibits the transfer of the unbalanced fault to another source.

If the APU generator is providing power to both AC BUS 1 and AC BUS 2, the AGCU requests BPCU 2 to open BTC 3 to inhibit the transfer of the unbalanced fault to another source. The AGCU de-excites the generator and opens the generator line contactor. The delta current protection is inhibited by an overcurrent condition. This prevents delta current from operating during a high-impedance single-phase fault condition. Overcurrent protection is required to take precedence for this condition.

Copyright © Bombardier Inc.

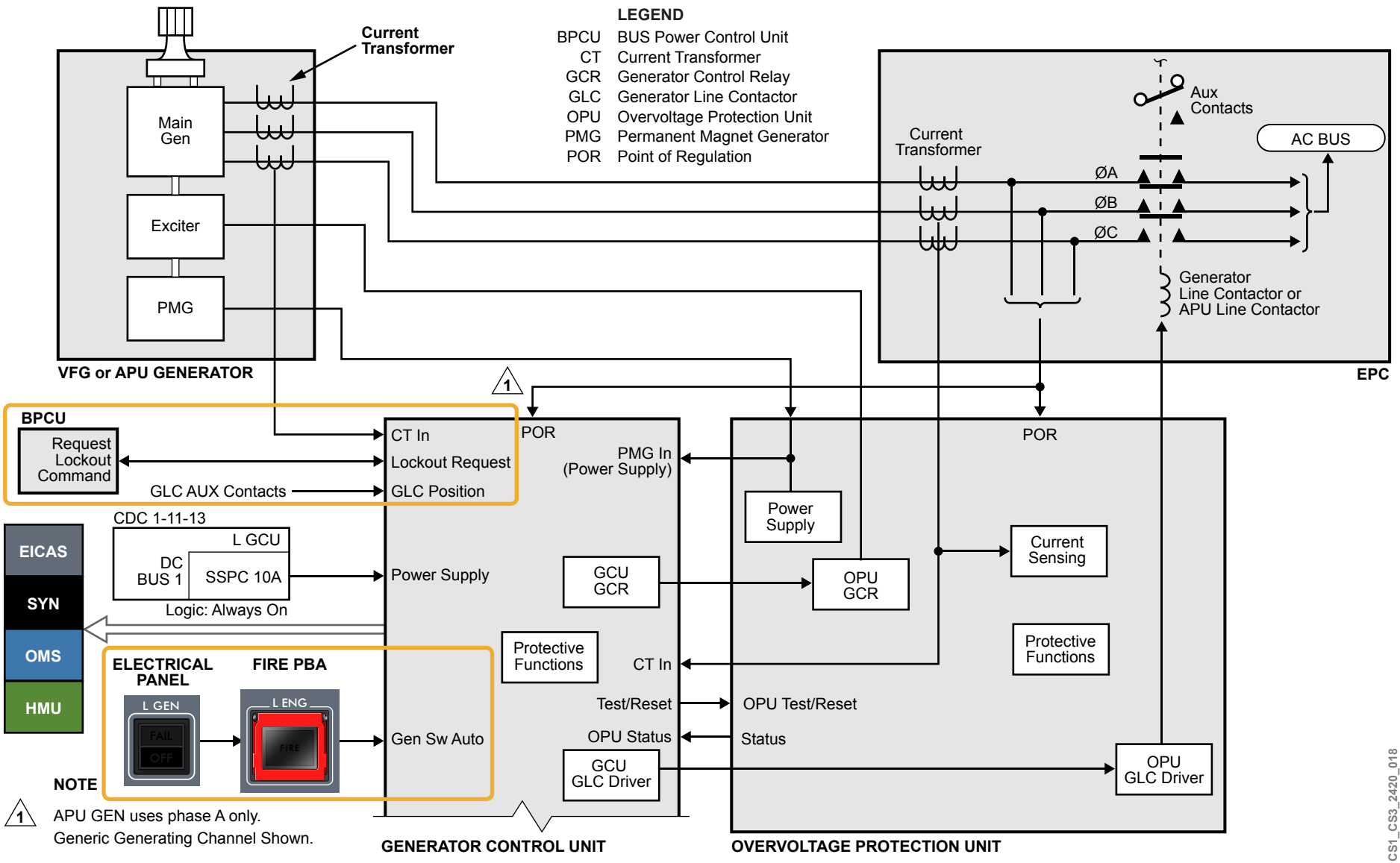

Figure 13: Generator Lockout and Engine FIRE PBA

Overvoltage Protection Unit Operation

The OPU provides the following limitations and protective functions:

- Overvoltage limiter
- Redundant overvoltage (ROV) protection
- OPU power supply protection

Overvoltage Limiter

The OPU provides an overvoltage limit protection function that senses the maximum POR voltage, and compares it with a preset OV limiter voltage upper threshold. If this threshold is reached for a very short period of time, the OPU will open the OPU GCR. The time delay is designed to minimize nuisance trips due to voltage spikes. The delay must allow the OPU to trip fast enough so that POR voltage never exceeds the system OV requirement for a GCU voltage regulation failure.

Redundant Overvoltage Protection

The OPU provides hardware overvoltage protection for the VFG and APU generators independent of the GCU software overvoltage protection. The OPU redundant overvoltage detection and removal is independent of the GCU/AGCU voltage regulation function. If the OPU inverse overvoltage protection threshold is exceeded, the OPU independently removes the generator excitation and opens the main line contactor.

Power Supply Protection

The OPU provides a power supply status discrete to indicate an OPU power supply failure to the GCU. The GCU disables the voltage regulator and locks out the GLC/ALC if the OPU power supply monitor indicates that the OPU power supply has failed.

Copyright © Bombardier Inc.

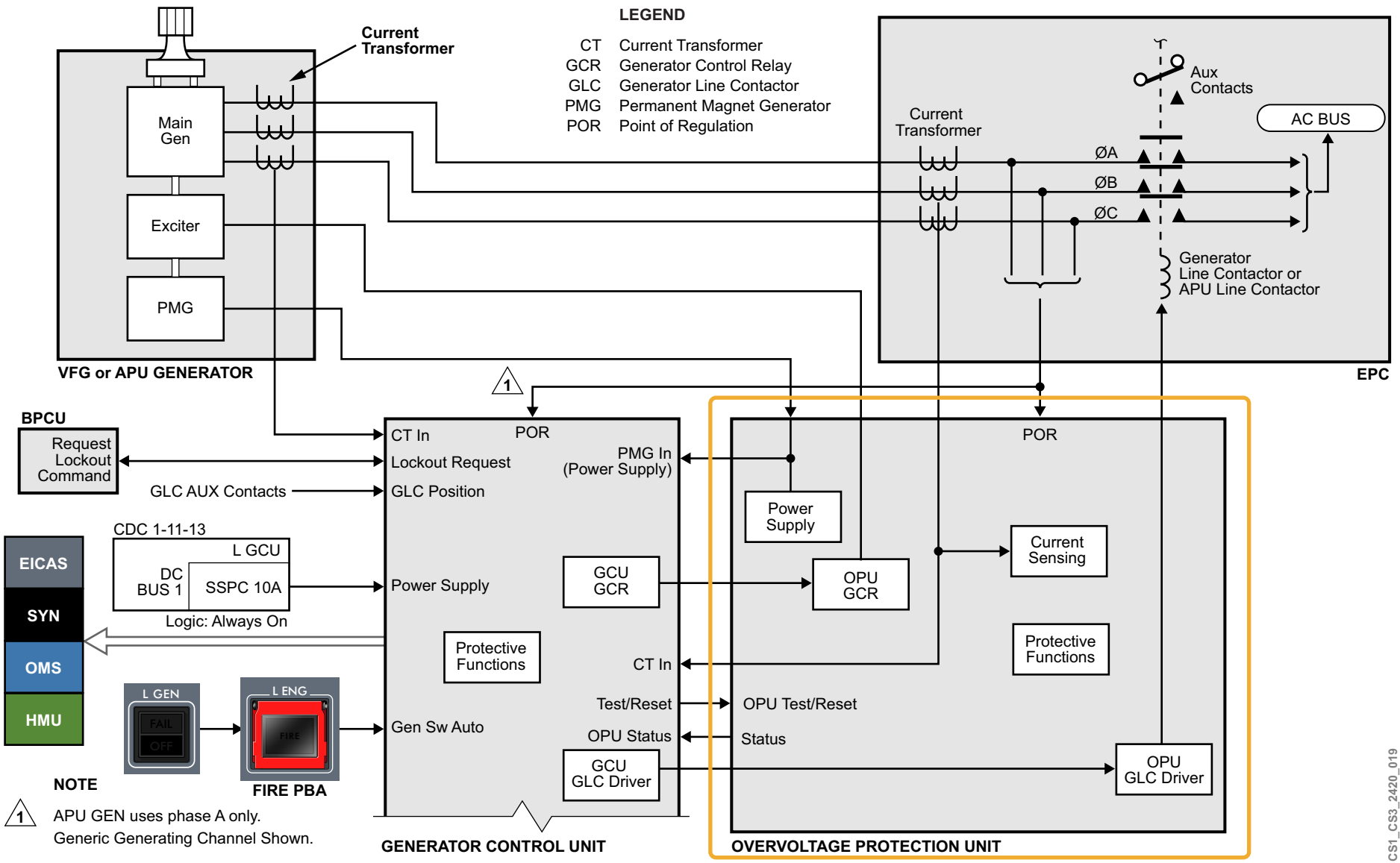

Figure 14: Overvoltage Protection Unit Operation

EXTERNAL POWER OPERATION

When external power is supplied to the aircraft, the external power transformer rectifier unit (EPTRU), located in EPC 1, converts AC power into 28 VDC and supplies it to both BPCUs. The DC power is also used to control any relays that the BPCUs request.

The AVAIL light indicates that the external power is of acceptable quality. Momentary selection of the EXT PWR PBA on the flight deck ELECTRICAL panel causes BPCU 1 to enter external power mode. BPCU 1 closes the ELC and the BTCs depending on the aircraft power configuration.

External power is removed from the distribution system when the EXT PWR PBA is selected again.

Pressing the momentary SERV PBA on the electrical/towing service panel commands BPCU 1 into ground service mode. When this occurs, the BPCU closes/opens the corresponding contactors for the aircraft to be in ground service mode. The ground service mode powers AC BUS 1, AC BUS 2, and DC BUS 1.

BPCU 1 will disconnect interlock pin F, and open and lock out the external power line contactor (ELC, if any of the following monitored external power fault conditions occur:

- Overvoltage (OV) fault
- Undervoltage (UV) fault
- Overfrequency (OF) fault
- Underfrequency (UF) fault
- Overcurrent (OC) fault
- Phase sequence fault
- Open phase fault
- ELC fail-to-open fault
- ELC fail-to-close fault
- PIN E-F Interlock fault

The ELC lockout can be reset by momentarily pressing the EXT PWR PBA in the flight deck, or by cycling all power on the aircraft. Some fault conditions can only be reset by cycling all power on BPCU 1.

External Power Pin E-F Interlock

The EP pin E-F interlock fault is active when BPCU 1 senses any of the following pin E-F interlock conditions:

- AC overvoltage fault
- DC overvoltage fault
- Overcurrent fault
- Pin E open fault

Other External Power Line Contactor Lockout Conditions

BPCU 1 also de-energizes and locks out the ELC for conditions not directly caused by external AC power. This is to prevent the automatic application of external power should the fault occur. These conditions include:

- Bus tie contactor 1 (BTC 1) fail-to-open fault
- Bus tie contactor 3 (BTC 3) fail-to-close fault
- AC tie differential fault
- Uncontrolled BPCU 1 shutdown fault
- ELC contactor chatter

Refer to the Primary Power Distribution section - BPCU for more information.

Copyright © Bombardier Inc.

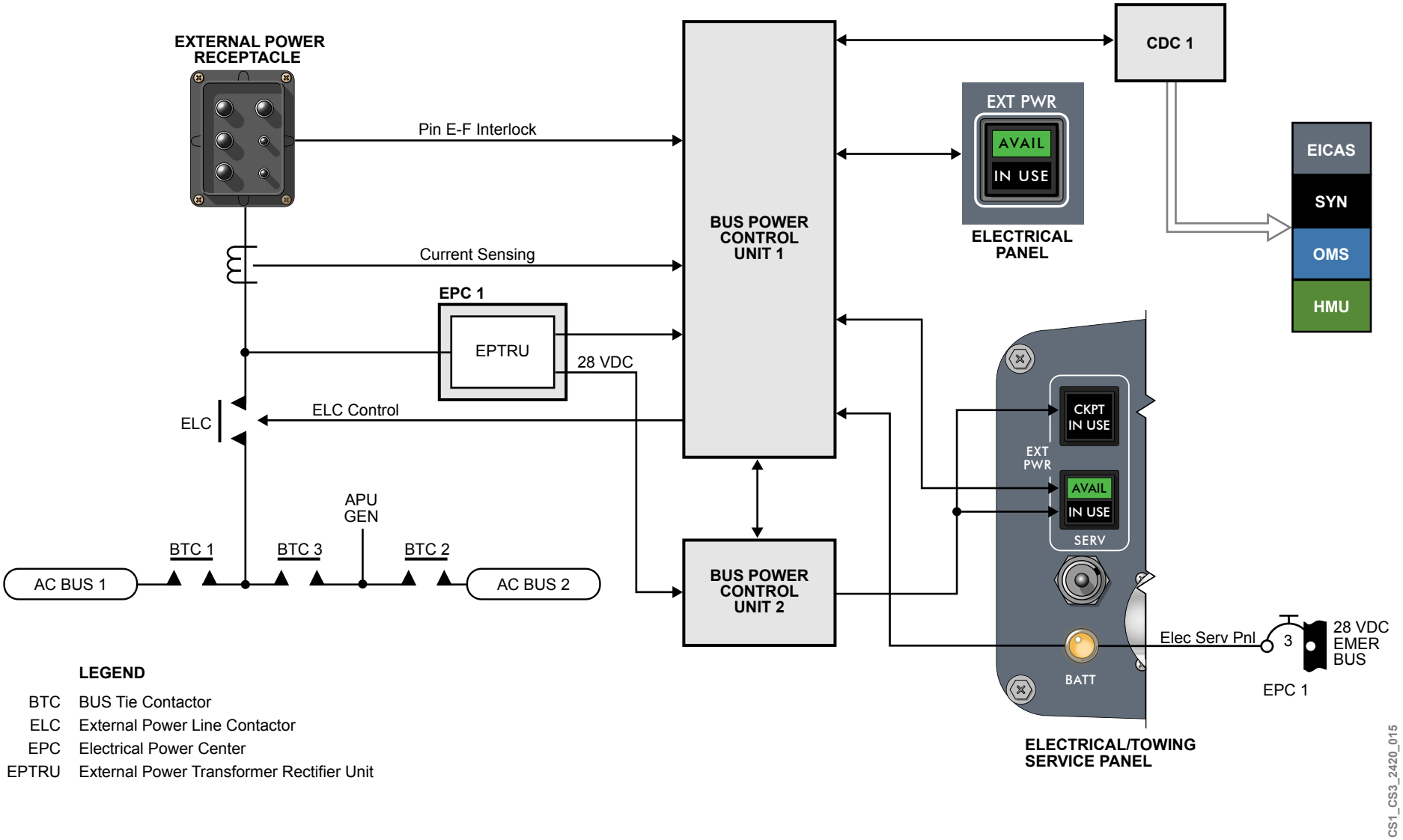

LEGEND

BTC	BUS Tie Contactor
ELC	External Power Line Contactor
EPC	Electrical Power Center
EPTRU	External Power Transformer Rectifier Unit

Figure 15: External Power Electrical Schematic

Copyright © Bombardier Inc.

MONITORING AND TESTS

The following page provides the crew alerting system (CAS) and INFO messages for AC electrical power generation.

CAS MESSAGES

Table 1: CAUTION Messages

MESSAGE	LOGIC
APU GEN FAIL	APU generator not online with APU running and the APU GEN PBA selected to AUTO, or a total loss of TTP communication from the APU GCU
L GEN FAIL	Left generator not online and the L GEN PBA set to AUTO, or total loss of TTP communication from the left GCU.
R GEN FAIL	Right generator not online and the R GEN PBA set to AUTO, or total loss of TTP communication from the right GCU.
L GEN OIL	Left generator low oil pressure or high oil temperature detected and no generator overload.
R GEN OIL	Right generator low oil pressure or high oil temperature detected and no generator overload.

Table 2: ADVISORY Messages

MESSAGE	LOGIC
EXT PWR AVAIL	External power connected and available for use.
ELECTRICAL FAULT	Loss of redundant or non-critical function for the electrical system (refer to INFO messages).

Table 3: STATUS Messages

MESSAGE	LOGIC
L GEN OFF	Left generator is off with associated engine running and GEN PBA selected OFF.
R GEN OFF	Right generator is off with associated engine running and GEN PBA selected OFF.
L GEN DISC	Left generator disconnected manually through DISC PBA.
R GEN DISC	Right generator disconnected manually through DISC PBA.
APU GEN OFF	APU generator is off with APU running and APU GEN PBA selected OFF.
EXT PWR IN USE	External power connected and online.

Table 4: INFO Messages

MESSAGE	LOGIC
24 ELECTRICAL FAULT - L GEN OIL LO LEVEL	Left generator oil level low.
24 ELECTRICAL FAULT - R GEN OIL LO LEVEL	Right generator oil level low.
24 ELECTRICAL FAULT - L GEN OIL HI DELTA P	Left generator oil filter impending bypass.
24 ELECTRICAL FAULT - R GEN OIL HI DELTA P	Right generator oil filter impending bypass.
24 ELECTRICAL FAULT - GEN INOP	Generator inoperative.
24 ELECTRICAL FAULT - L GEN DEGRADED	Left generator minor fault.
24 ELECTRICAL FAULT - R GEN DEGRADED	Right generator minor fault.

Copyright © Bombardier Inc.

Page Intentionally Left Blank

Table 4: INFO Messages

MESSAGE	LOGIC
24 ELECTRICAL FAULT - APU GEN DEGRADED	APU generator minor fault.
24 ELECTRICAL FAULT - GND CART INOP	Ground power cart inoperative.

Copyright © Bombardier Inc.

PRACTICAL ASPECTS

VFG SERVICING

The VFG is serviced through a pressure fill fitting. The pressure fill cap cannot be removed unless the overfill drain plug is removed. Servicing is not possible if the overfill cap is not removed.

The VFG does not have a manual vent feature. The pressure is relieved through pressure-relief orifices at the servicing points. Once a filter cover or service point cap is loosened, the pressure-relief orifice is exposed, the case pressure is vented, and the cover can be removed.

When the oil service cart is connected to the pressure fill port and the filling procedure has started, oil flows through the cooling circuit and back into the VFG. When the oil reaches the level of the standpipe, the oil will flow out of the overfill drain. Allow the required quantity of oil to drain after filling. The oil level can be verified at the oil level sight glass on the VFG.

The VFG case oil drain port allows complete emptying of the VFG case.

Copyright © Bombardier Inc.

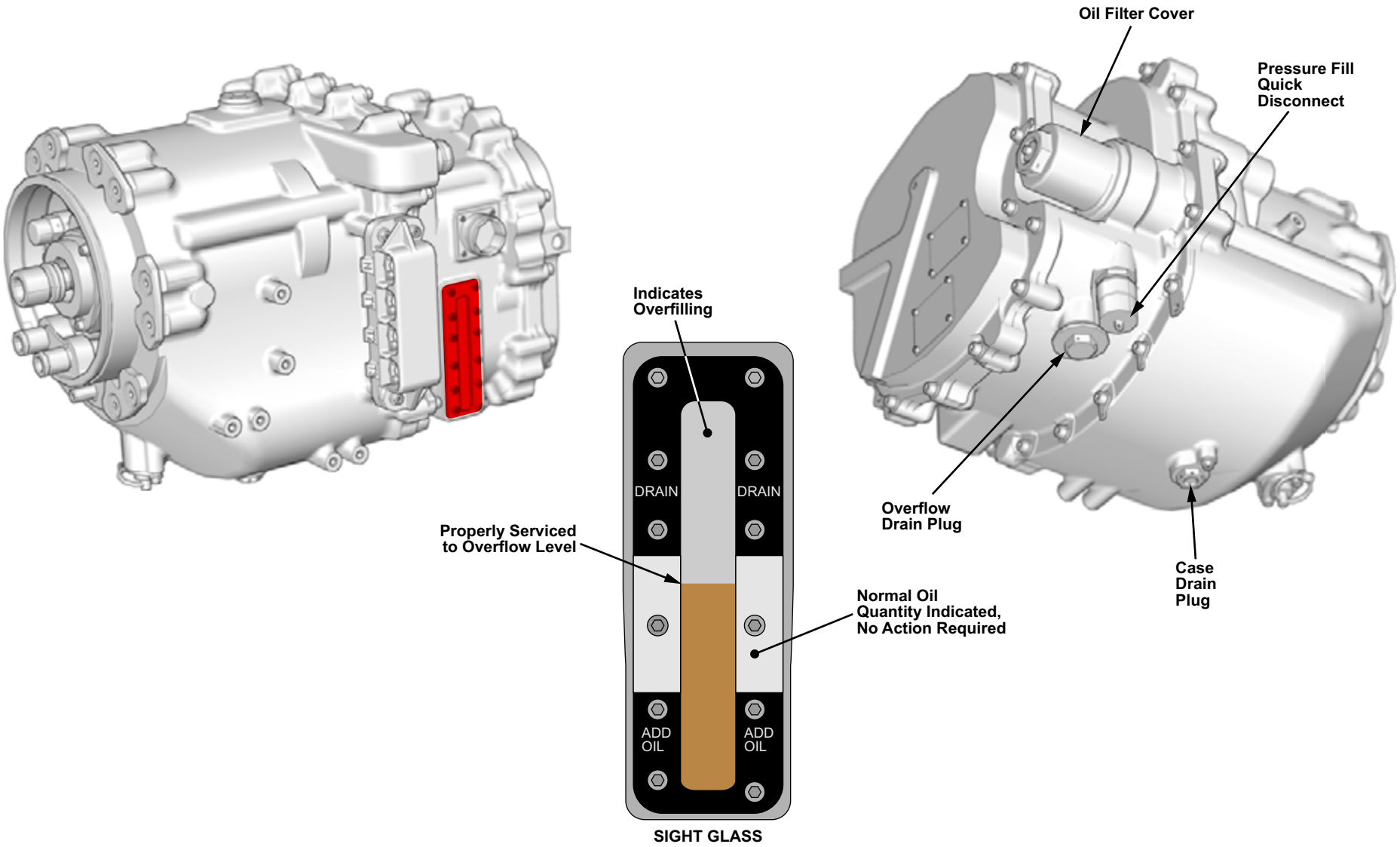

Figure 16: VFG Servicing

VFG REMOVAL AND INSTALLATION

Removal and installation of the variable frequency generator is done using ground support equipment (GSE).

The GSE supports the weight of the VFG and rotates the unit when installed in the quick attach/detach (QAD) adapter.

A QAD adapter secures the VFG to the engine main gearbox. The QAD is a breech type device that provides proper orientation of the VFG, and permits rapid installation or removal of the VFG.

The QAD adapter has an asymmetric bolt hole pattern to prevent incorrect installation.

To remove the VFG, release the tension bolt and rotate the VFG until the open marks are aligned. Upon installation, the VFG is inserted at the open align marks and rotated until the close marks align.

CAUTION

The VFG and QAD adapter weigh approximately 50 kg (110 lb).

Do not support the weight of the VFG using the drive shaft or terminal block cover.

Copyright © Bombardier Inc.

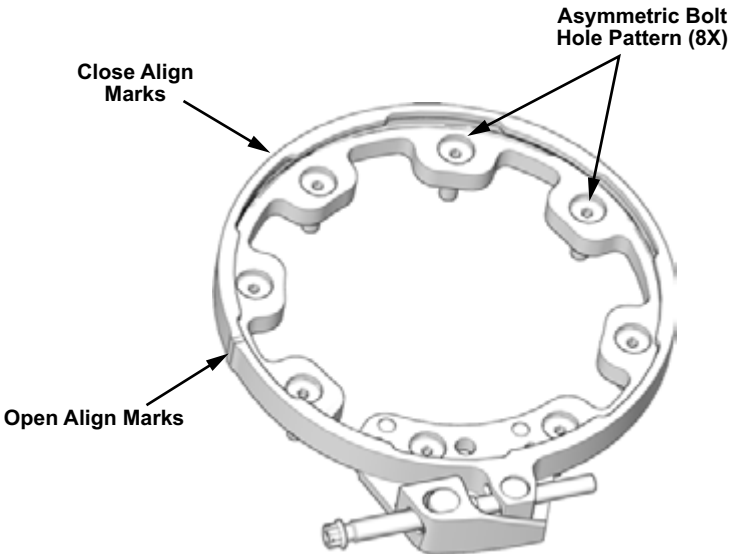

VFG QUICK ATTACH/DETACH ADAPTER

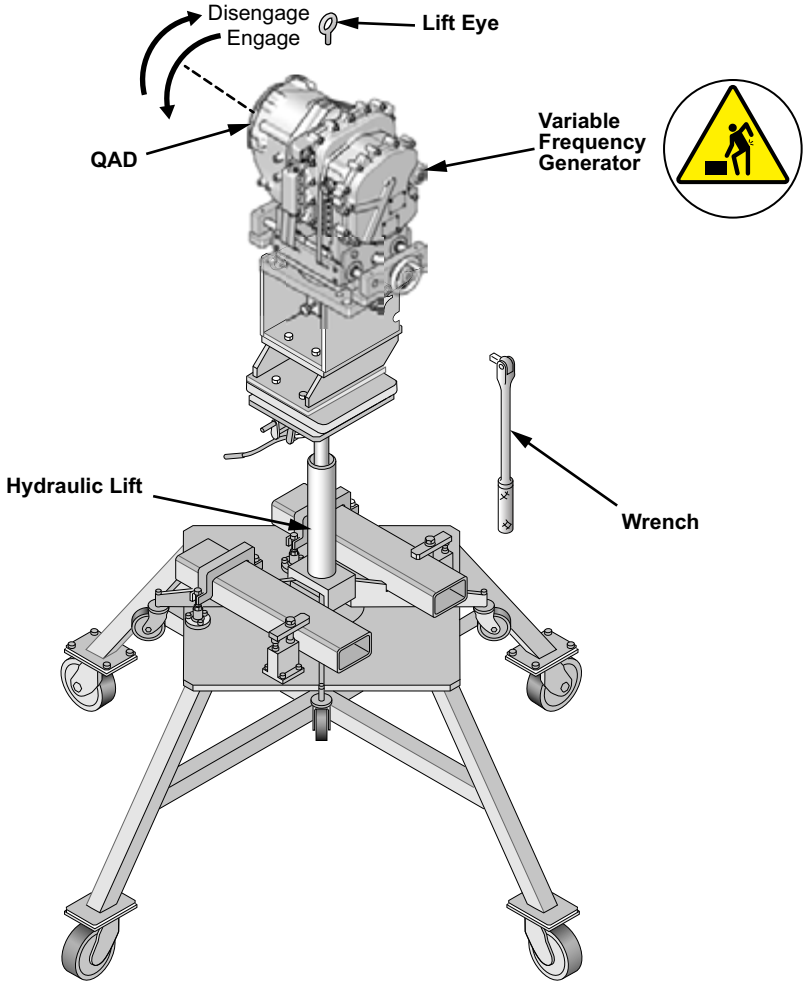

VFG REMOVAL AND INSTALLATION GROUND SUPPORT EQUIPMENT

CS1_CS3_2420_017

Figure 17: VFG Removal and Installation and Ground Support Equipment

24-30 DC POWER GENERATION

GENERAL DESCRIPTION

DC power generation is provided by three transformer rectifier units (TRUs), and two NiCad batteries.

Each of the main electrical channels and the emergency channel, centered in electrical power centers (EPCs) 1, 2, and 3, include a TRU. The TRU converts 115 VAC, 3-phase power into 28 VDC. TRU 1 and TRU 2 supply DC for primary and secondary power distribution, normally feeding DC BUS 1 and DC BUS 2, as well as DC ESS BUS 1 and DC ESS BUS 2. TRU 3 typically feeds DC ESS BUS 3.

Two NiCad batteries provide 24 VDC. BATT 1 supplies the left main channel, and BATT 2 supplies the right main channel. The batteries feed their respective BATT DIRECT BUS, and the DC EMER BUS.

Each of the batteries is charged by a dedicated battery charger. The battery charger uses AC power from the AC BUS to maintain the battery in the fully charged condition.

Information on the status of the batteries and the TRUs is provided to the engine indication and crew alerting system (EICAS) and the ELECTRICAL synoptic page, as well as the onboard maintenance system (OMS) and aircraft health management system (AHMS).

When AC power is not available, the batteries can supply power for:

- APU starting
- Refueling
- Service lights

In flight, the batteries power essential loads when the ram air turbine (RAT) is not available.

The batteries also backup the DC ESS BUSES to ensure no power-break for the DC loads.

Copyright © Bombardier Inc.

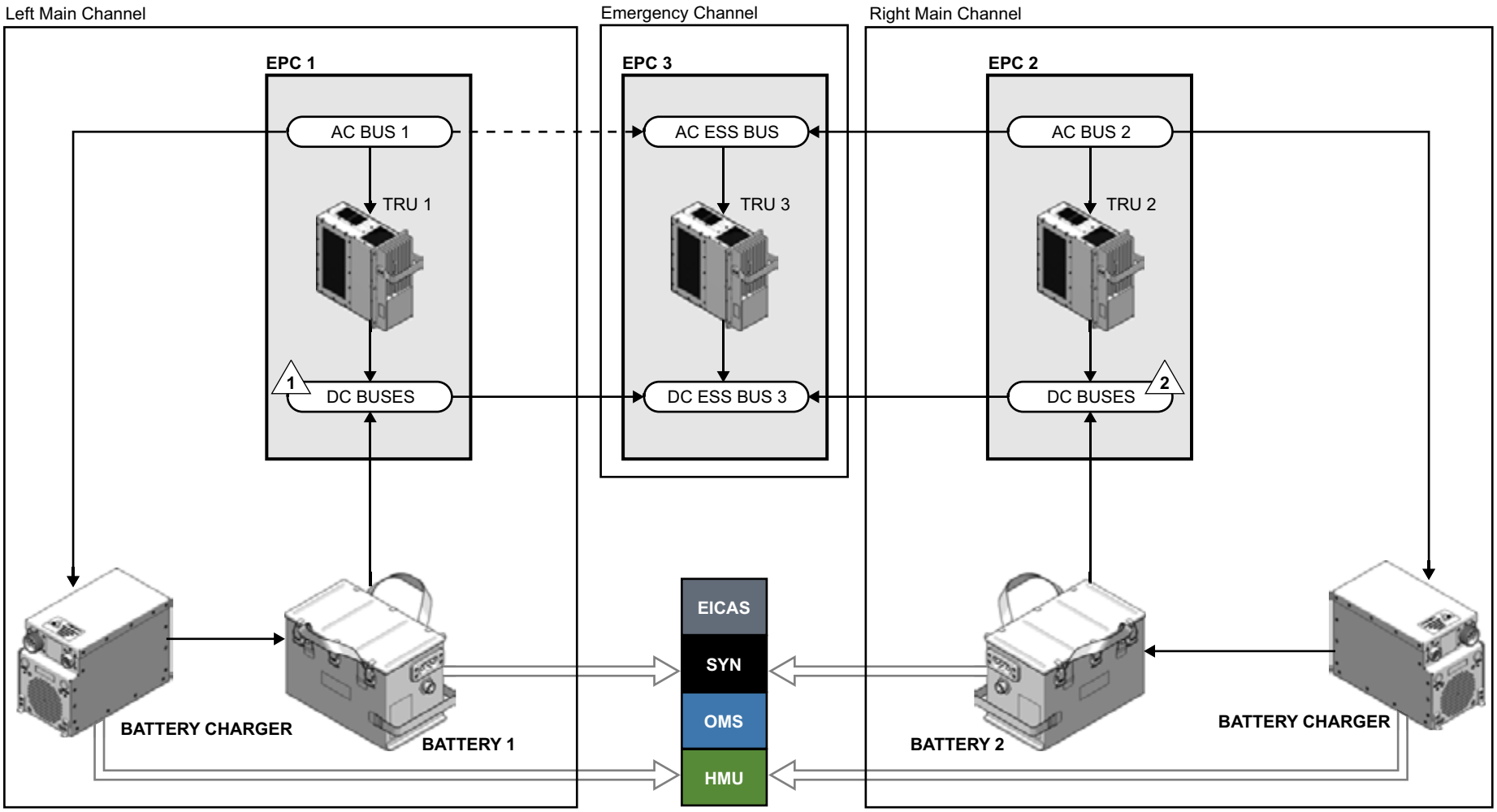

NOTE

1 DC BUS 1, DC ESS BUS 1, BATT DIR BUS 1 and EMER BUS.

2 DC BUS 2, DC ESS BUS 2 and BATT DIR BUS 2.

CS1_CS3_2402_001

Figure 18: DC Power Generation

Copyright © Bombardier Inc.

COMPONENT LOCATION

TRANSFORMER RECTIFIER UNIT

There are three identical transformer rectifier units (TRUs). TRU 1 is located in EPC 1, TRU 2 is located in EPC 2, and TRU 3 is located in EPC 3.

Copyright © Bombardier Inc.

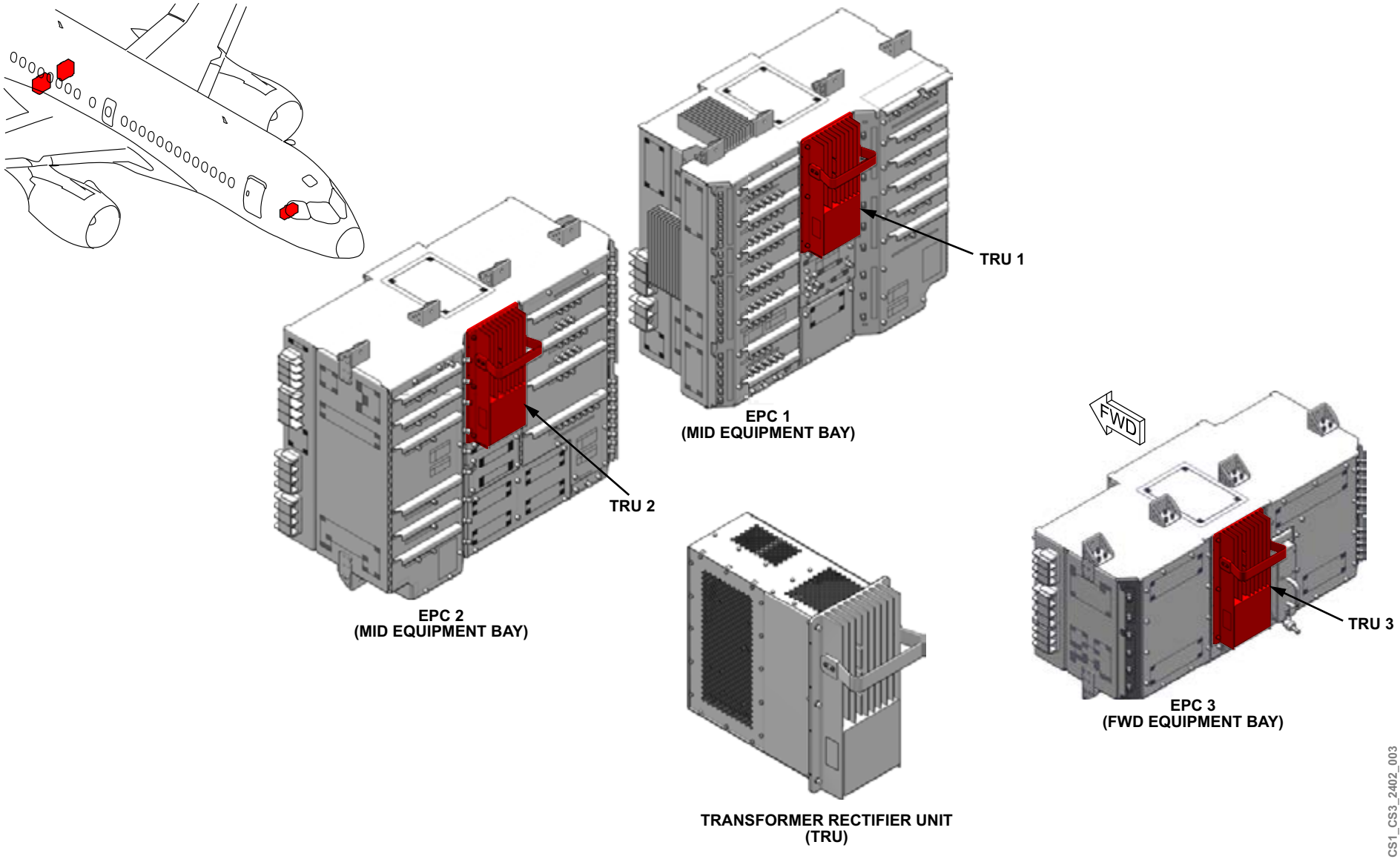

Figure 19: Transformer Rectifier Units

BATTERY CHARGERS

There are two identical battery chargers located in the mid equipment bay.

NICAD BATTERIES

Two NiCad batteries are located in the right wing-to-body fairing (WTBF), aft of the wing.

CAUTION

Each battery weighs approximately 40 kg (89 lb).

Copyright © Bombardier Inc.

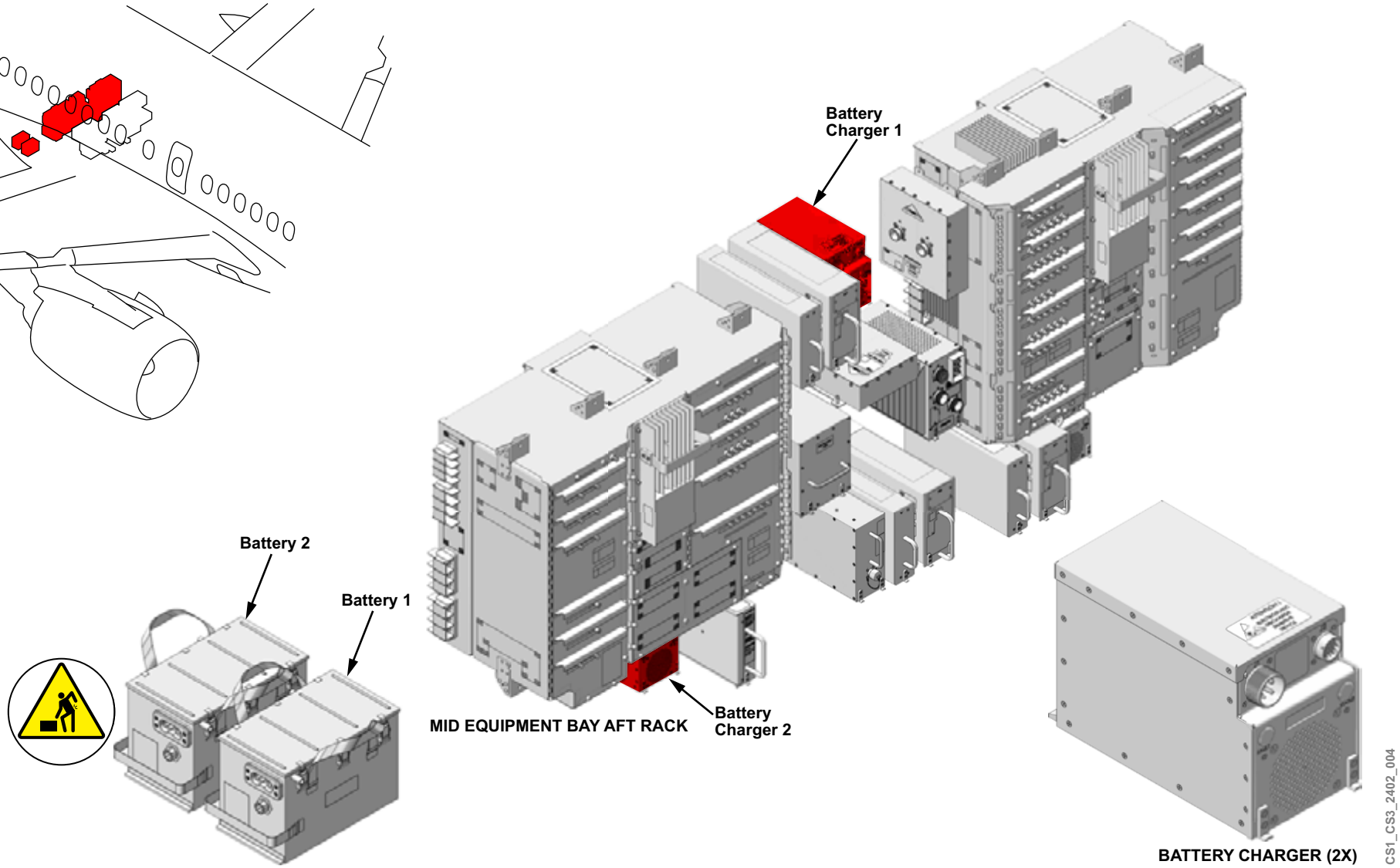

Figure 20: Batteries and Battery Chargers

DETAILED COMPONENT INFORMATION

TRANSFORMER RECTIFIER UNIT

The primary function of the TRUs is to convert 115 VAC, 3-phase input power to 28 VDC power for its associated channel. The TRU input power is filtered and isolated through a power transformer and rectified to convert the AC input to a DC output.

The TRU has an integral cooling fan automatically controlled by an internal temperature switch.

A shunt in the DC output return line is used by the bus power control unit (BPCU) and emergency power control (EMPC) to monitor TRU output current.

The status of TRU 1 and TRU 2 is monitored by their host BPCU. Both BPCUs and EMPC monitor TRU 3.

The following conditions are monitored:

- Overvoltage
- Ripple voltage
- Fan failure
- Overtemperature

The BPCUs and EMPC use these signals to perform the protection, BIT, and health monitoring functions for the TRUs.

If any of the above conditions occur, the TRU is deemed unavailable.

TRU Fan Failure

When the TRU fan failure discrete to the BPCU is active for 5 seconds, the associated TLC is locked out and the TRU deemed unavailable. TRU 3 fan failure protection is inhibited when the RAT is deployed.

TRU Overtemperature

Each TRU provides a discrete output signal to its associated BPCU/EMPC to indicate a TRU overtemperature. When TRU 1 or TRU 2 overtemperature protection is active, the associated TLC is locked out and the TRU is considered unavailable. When the TRU 3 overtemperature protection is active, TLC 3 is locked out and the TRU is considered unavailable. TRU 3 overtemperature protection is inhibited when the RAT is deployed.

When a TRU is inoperative, a TRU FAULT advisory message is displayed. The associated INFO message identifies the inoperative TRU.

Copyright © Bombardier Inc.

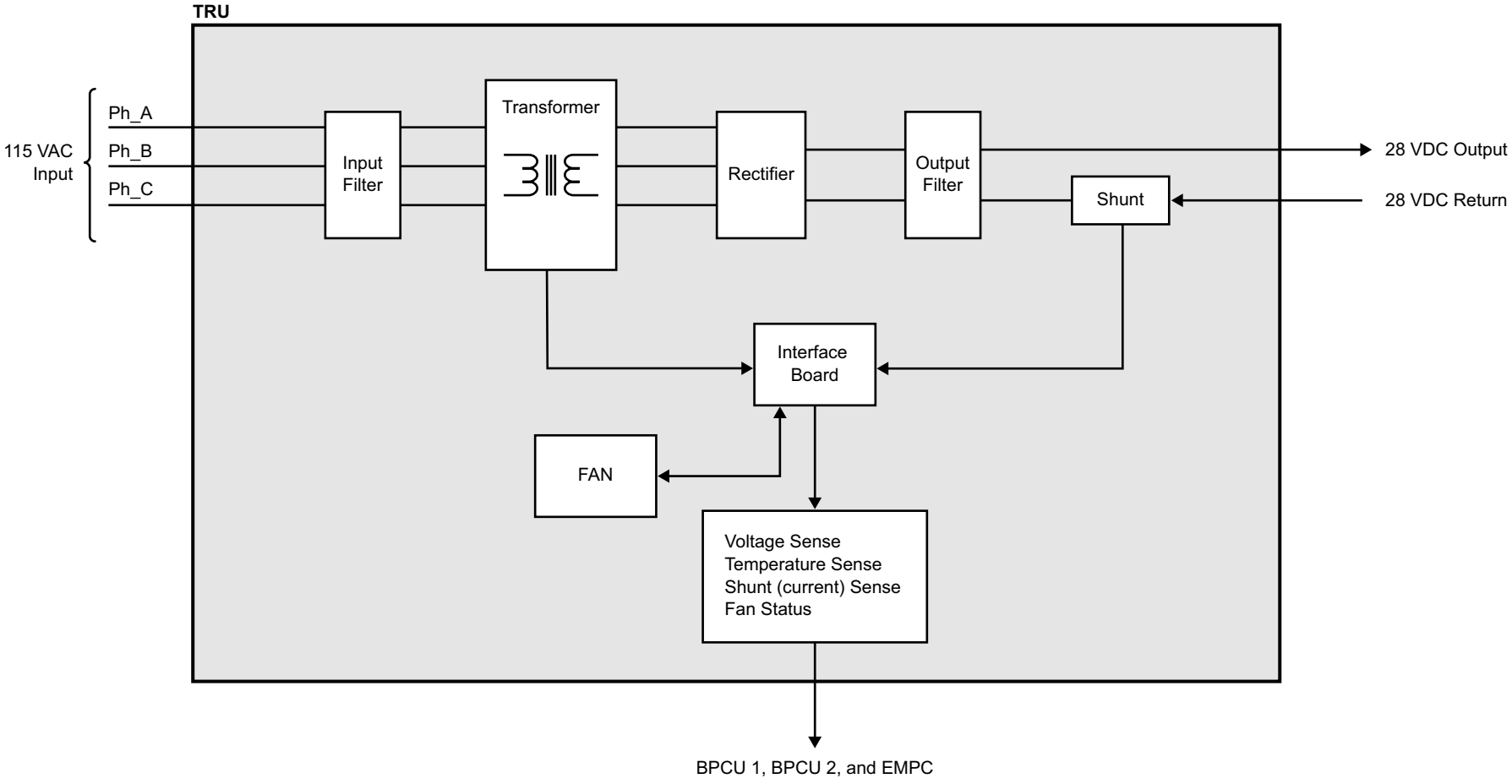

CS1_CS3_2402_010

Figure 21: Transformer Rectifier Unit Block Diagram

BATTERY CHARGER 1

The function of the battery charger is to maintain its respective battery in a fully charged condition to support the ESS BUS.

AC BUS 1 power is supplied to battery charger 1 through a 3-phase AC SSPC located in CDC 1. The output of the battery charger is connected to the associated battery through its BATT DIRECT BUS. Due to the arrangement of buses, the battery charger also performs a power supply function. The DC output of the battery charger is limited to a maximum of 44 A.

BPCU 1 sends the command to its associated CDC over the time-triggered protocol (TTP) buses to turn the battery charger SSPC on and off. The battery charger is commanded on whenever AC power is available on AC BUS 1 and the BATT 1 switch on the ELECTRICAL panel is selected to AUTO. The battery chargers and battery heaters are also turned on during ground service mode operation, regardless of the position of the BATT switch.

The operation of the battery charger and heater is inhibited if a battery overcurrent condition is detected, or if the associated battery line contactor fails in the closed condition.

In the event of a battery or battery charger failure, the charger provides a discrete output to the associated CDC. Any fault results in the battery charger stopping the charging process.

A BATTERY CHARGER FAULT advisory CAS message is displayed upon failure of battery charger 1 or 2.

The BATT 1 (2) FAIL caution message is displayed. under one of the following conditions:

- The battery is not connected to the DC ESS BUS when commanded by the BPCU
- A battery fault is detected
- The battery is not installed
- The BATT 1(2) switch is selected to AUTO and the associated BLC is failed in the closed or open position

The battery chargers perform power-on built-in test (PBIT). During PBIT, the charger also performs an operational test of the battery temperature sensor.

Copyright © Bombardier Inc.

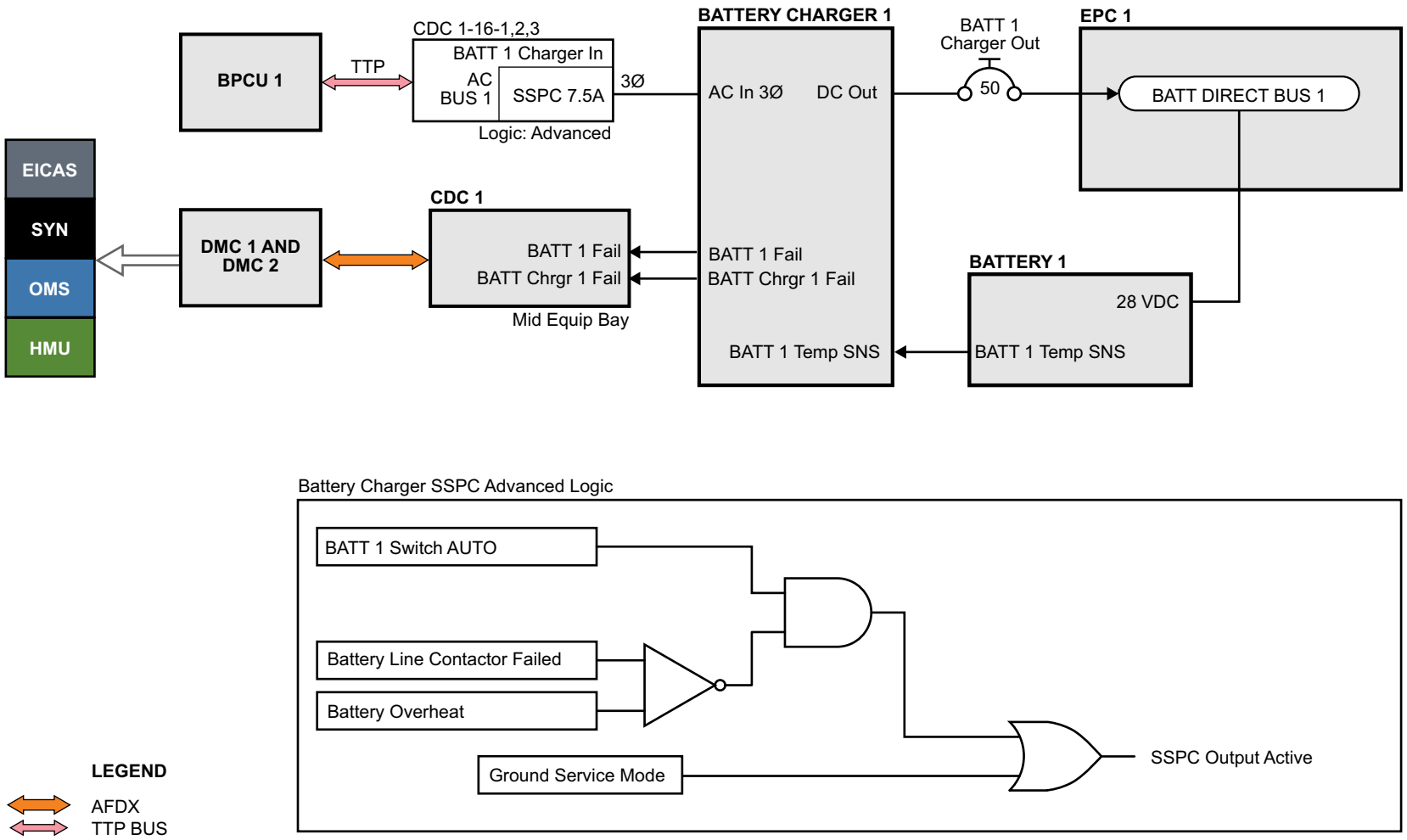

Figure 22: Battery Charger 1 Functional Schematic

BATTERY CHARGER 2

The operation of battery charger 2 is similar to that of battery charger 1 except in the emergency mode.

AC BUS 2 power is supplied to battery charger 2 through a 3-phase AC SSPC located in CDC 2. However, under emergency conditions, AC BUS 2 is not available. In order to continue to charge battery 2 in emergency conditions, the source of power for the battery charger is switched over to the AC ESS BUS, which is powered by the RAT generator.

The EMPC provides an EMER MODE 28 VDC discrete when the RAT deploys. The 28 VDC powers the coil of the battery charger control relay through the BATT 1 switch AUTO contacts. When the RAT is deployed and the RAT line contactor is energized, a ground is supplied to the battery charger control relay and the AC ESS BUS powers battery charger 2.

During ground service mode operation, AC BUS 2 is powered. CDC 2 turns on, but only controls power outputs to the BATT 2 charger in SSPC and BATT 2 heat.

Copyright © Bombardier Inc.

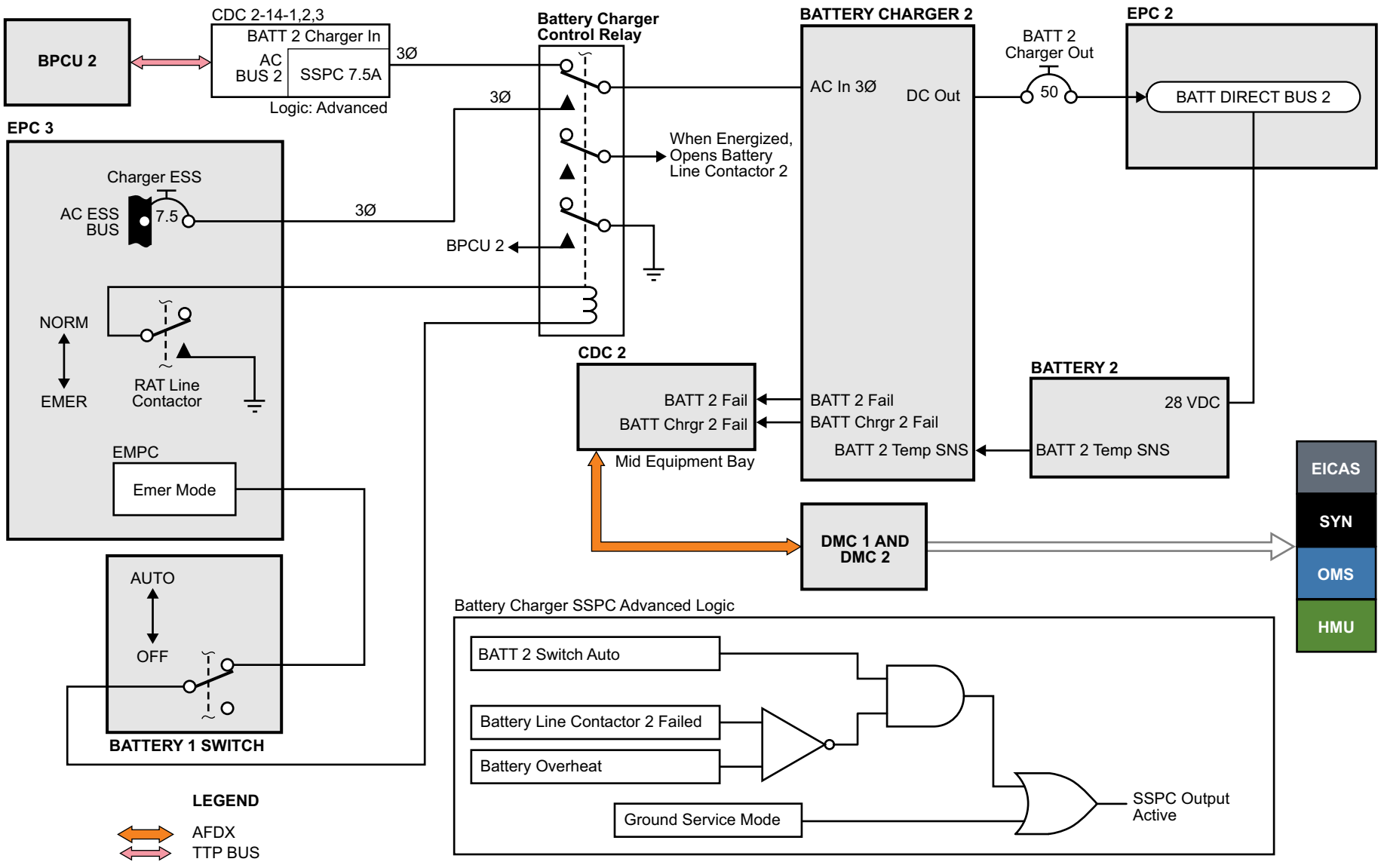

Figure 23: Battery Charger 2 Functional Schematic

BATTERY HEATER

Each battery contains an internal heater and two internal temperature sensors. The battery charger uses temperature sensor 2 for charge rate control, which prevents excessive temperatures within the battery and also shuts down the charger in the case of excessive battery temperature.

The battery heater receives AC power from a single-phase SSPC on AC BUS 1 for BATT 1 and AC BUS 2 for BATT 2. The logic to drive the output is the same as that which drives battery charger operation. The heater power is applied in ground service mode, or when the associated BATT switch is in the AUTO position.

The internal heater draws as much as 620 W, and increases battery temperature by approximately 0.6°C (1.08°F)/minute following a cold soak at -20°C (-4°F). An internal thermal switch automatically terminates heater operation at temperatures above 16.8°C (62°F). A second thermal switch, in series with the first one, ensures that no overtemperature conditions can occur in the battery due to the heater.

Temperature sensor 1 provides information to the DMCs for indication of battery temperature in the flight deck. If battery temperature exceeds 71°C (160°F), the BATT 1 (BATT 2) OVERTEMP caution message will be displayed. It will remain posted until battery temperature drops below 65°C (149°F).

Battery temperature is also displayed on the ELECTRICAL synoptic page. The temperature readout changes from its normal white to amber if the BATT 1 (BATT 2) OVERTEMP caution message is displayed or if battery temperature is less than -20°C (-4°F).

Copyright © Bombardier Inc.

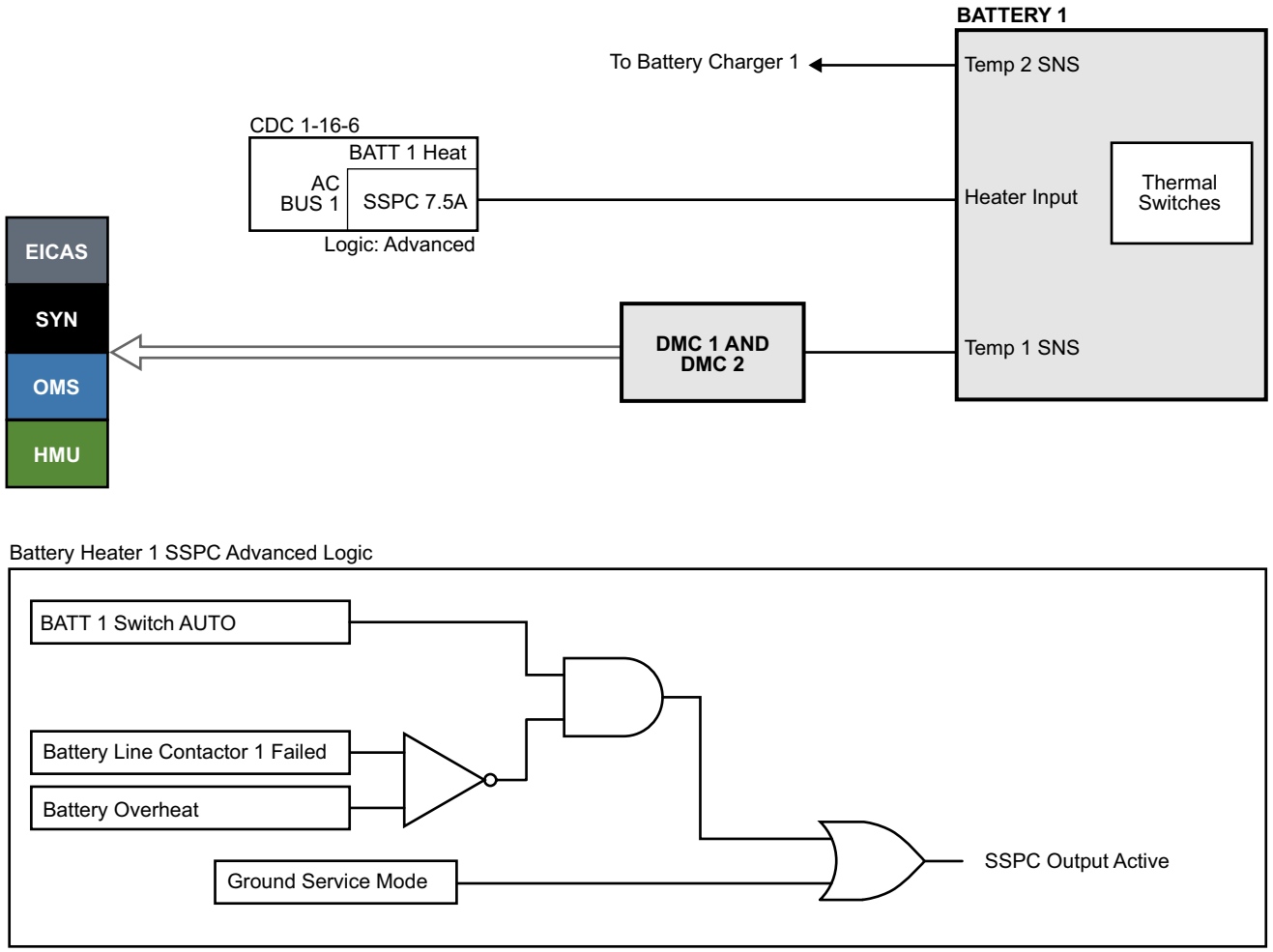

CS1_CS3_2402_014

NOTE

Battery heater 1 shown, battery heater 2 similar.

Figure 24: Battery Heater Functional Schematic

CONTROLS AND INDICATIONS

DC POWER GENERATION - CONTROLS

Controls for DC power generation are located on the overhead ELECTRICAL panel and exterior electrical/towing service panel.

Two battery switches are available, one for each of the batteries.

A BATT status indicator is installed on the electrical/towing service panel. This amber light illuminates continuously when the aircraft is on the ground, with either BATT 1 or BATT 2 switch on the ELECTRICAL panel selected to AUTO, and when the APU, external power, and engine generators are off. The light flashes and the external multifunction horn sounds when batteries are depleting for more than 5 minutes. The light will shut off when at least one AC power source comes online or when the electrical power is turned off.

Copyright © Bombardier Inc.

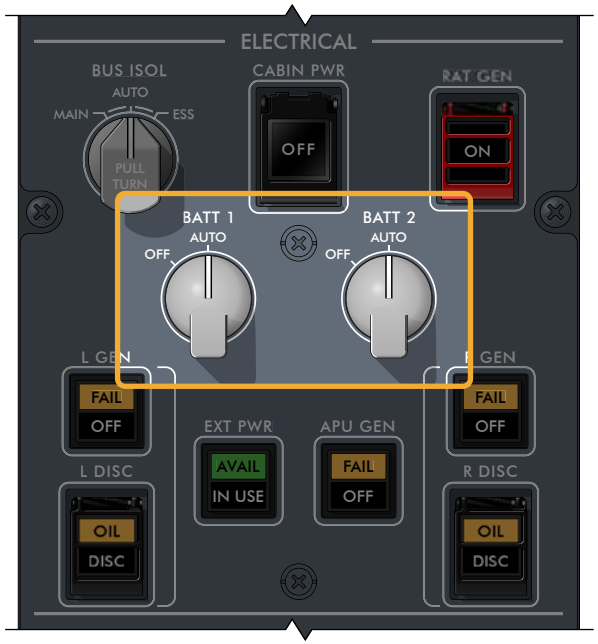

ELECTRICAL PANEL

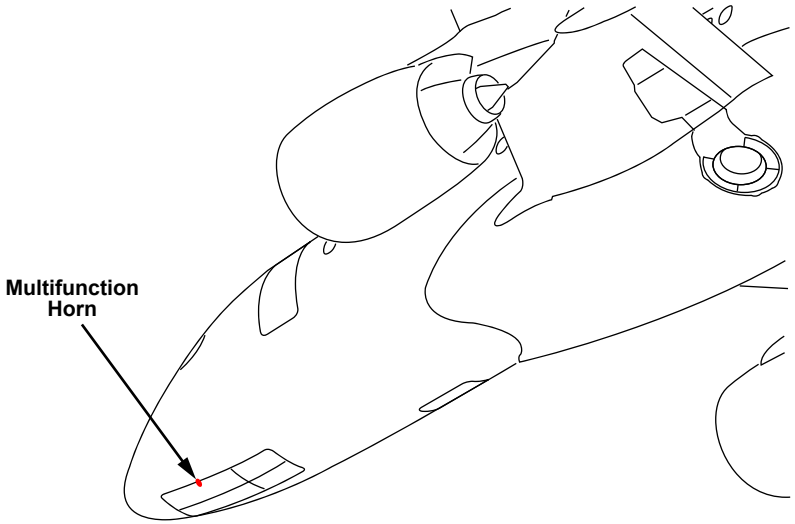

ELECTRICAL/TOWING SERVICE PANEL

CS1_CS3_2402_008

Figure 25: DC Power Generation - Controls

DC POWER GENERATION - ELECTRICAL SYNOPTIC PAGE

The ELECTRICAL synoptic page provides a dynamic representation of the status of the electrical power generation and distribution system. The DC elements are displayed on the upper portion. Colored flow lines indicate the status of power between the various elements.

The following information relating to DC power is displayed:

- Transformer rectifier units 1, 2, and 3
- Battery 1 and Battery 2
- DC BUS 1 and DC BUS 2
- DC ESS BUS 1, DC ESS BUS 2, and DC ESS BUS 3

The DC EMER BUS and its flow lines are only displayed should the DC emergency bus be unpowered with AC power online.

Indication of TRU status is provided on the ELECTRICAL synoptic page. The TRU box outline is displayed in green for normal operation, in white if the TRU voltage is low as a result of loss of AC supply, and in amber if the BPCU detects a TRU inoperative.

Copyright © Bombardier Inc.

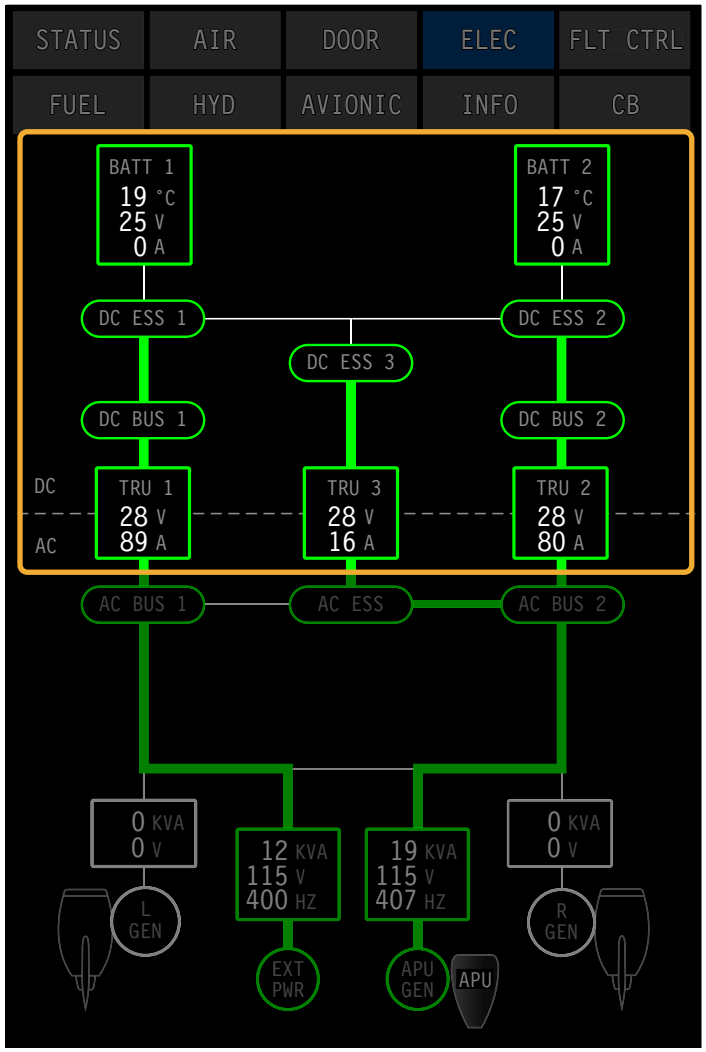

SYNOPTIC PAGE - ELECTRICAL

TRU/BATT STATUS	
Symbol	**Condition**
TRU1 28 V 0 A	Not online Normal disconnect
BATT1 30 °C 28 V 20 A	Normal Operation
BATT2 30 °C 150 V 200 A	Fail
TRU3 32 V 11 A	Invalid

TEMPERATURE READOUT	
Symbol	**Condition**
72 °C	Overtemp
32 °C	Normal
-- °C	Invalid

BUS STATUS	
Symbol	**Condition**
DC ESS 1	Powered
DC ESS 1	Failed
DC ESS 1	Disconnected
DC ESS 1	Invalid

CURRENT, VOLTAGE, FREQUENCY, PWR RATING READOUTS	
Symbol	**Condition**
44 A	Abnormal
28 V	Normal
-- KVA	Invalid

FLOW LINES	
Symbol	**Condition**
	Powered
	Not powered
	Invalid

CS1_CS3_2402_009

Figure 26: DC Power Generation - Electrical Synoptic Page

DETAILED DESCRIPTION

BATTERY SYSTEM

The battery direct buses supply the DC EMER BUS through an 80 A fuse and diode (D1 and D2). The DC EMER BUS is located in EPC 1. The diodes prevent each battery direct bus from supplying the other battery direct bus.

Battery current draw is monitored by a hall effect sensor (HES) that provides an analog output signal of current flow to the associated BPCU. The BPCU provides 15 VDC for the associated HES power supply. The BPCU also performs a built-in test on the HES.

Battery 1 and Battery 2 systems operate in a similar manner. Battery 1 is described below.

When the BATT 1 switch is in AUTO and AC power is not available, BATTERY DIRECT BUS 1 powers DC ESS BUS 1 through the battery line contactor (BLC) 1. BLC 1 energizes when the BATTERY DIRECT BUS is powered, and a ground is supplied by BPCU 1. The ground is supplied through the de-energized contact of DC EMER relay 1 and the energized BATT 1 SLAVE relay.

When AC power is available, the BPCU removes the ground from BLC 1, and TRU 1 powers DC ESS BUS 1. If AC power is lost, AC SLAVE relay 1 de-energizes and the emergency power control card supplies power to energize DC EMER relay 1. This provides a ground to energize BLC 1, allowing the BATTERY DIRECT BUS 1 to power DC ESS BUS 1.

The BPCU provides a ground signal to close the BLC under the following conditions:

- BPCU power-up
- BPCU internal failure
- SSRPC 1 or 2 are commanded to provide no-break power for 10 seconds

The BPCU opens the associated BLC under the following conditions:

- APU start request from the APU ECU (BLC 2 only)
- Battery overcurrent > 1000 A for 0.5 seconds
- Battery overcurrent > 500 A for 15 seconds
- TRU overcurrent
- When the BPCU detects a contactor chatter more than four times in 5 seconds
- TRU ripple voltage for > 5 seconds

NOTE

Battery 2 overcurrent protection is inhibited during APU starts.

Copyright © Bombardier Inc.

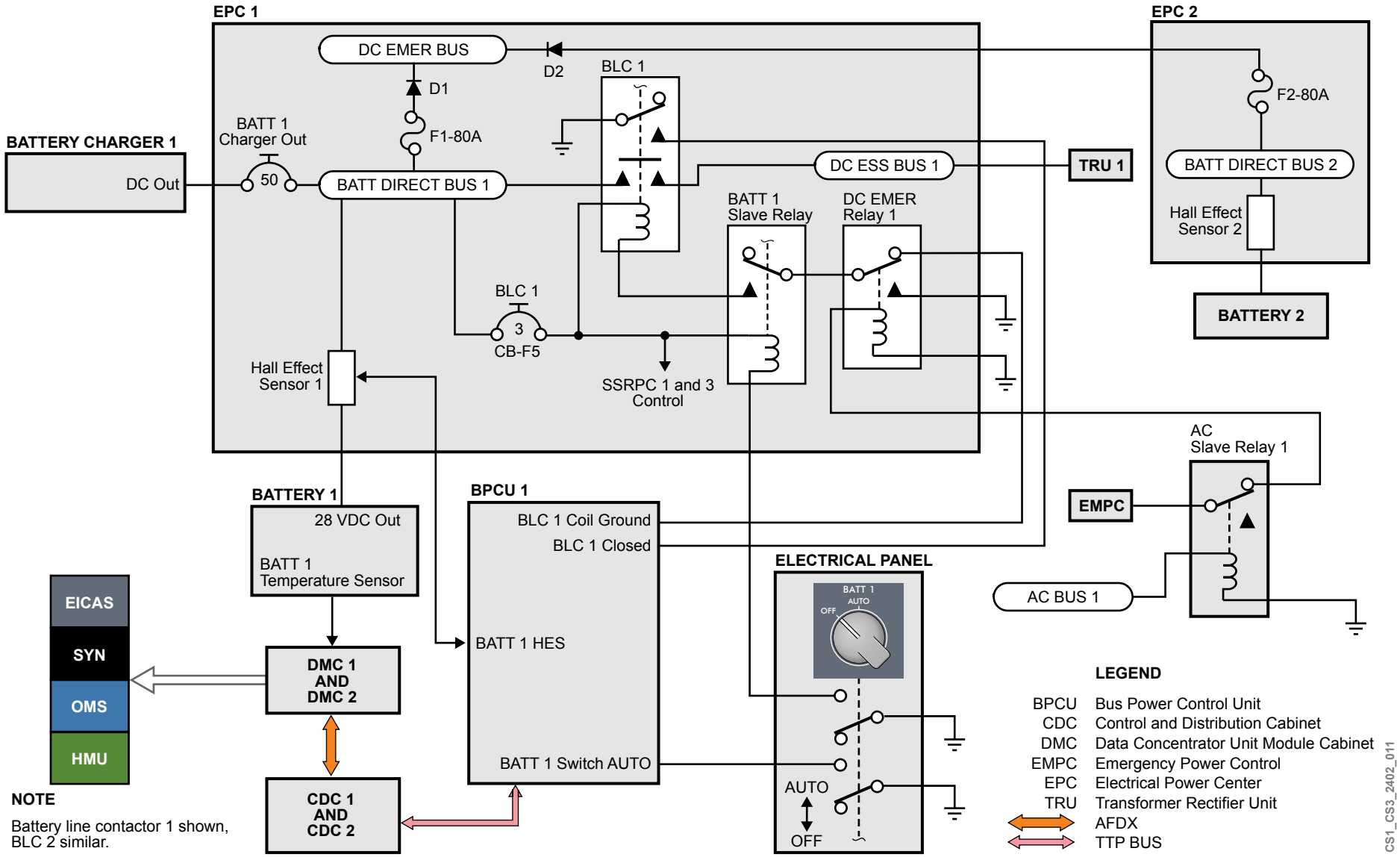

Figure 27: Battery System Operation

MONITORING AND TESTS

BATTERY CHARGER TEST

The battery charger front face contains an LCD display as well as FAULT and STATUS test buttons.

There are two display modes: normal and advanced.

In the normal display mode, the LCD display alternates between the charger mode and charger fault status every 2 seconds.

If the STATUS pushbutton is pressed while in the normal display mode, the operating status of the charger displays. Information available includes software version, operating mode, output voltage, and current.

If the FAULT pushbutton is pressed while in the normal display mode, the charger provides information on any fault conditions.

Pressing and holding the STATUS and FAULT pushbuttons simultaneously for more than 5 seconds forces the charger into the advanced display mode. The display counts down from AdvMenu4 to AdvMenu0 over an additional 5 seconds, at which time the AdvMenu is displayed, confirming entry into advanced display mode. The pushbuttons can be released after this time.

Once the pushbuttons are released, the advanced battery charger information can be accessed by the following menu options:

- Software revision code
- Stored faults display
- Date/time
- Total operating hours
- Date and time set mode
- Exit

The menu items can be advanced using the STATUS pushbutton. The selected menu can be accessed using the FAULT pushbutton.

The advanced display mode can be exited by selecting the FAULT pushbutton when the menu item ADV EXIT is displayed.

Copyright © Bombardier Inc.

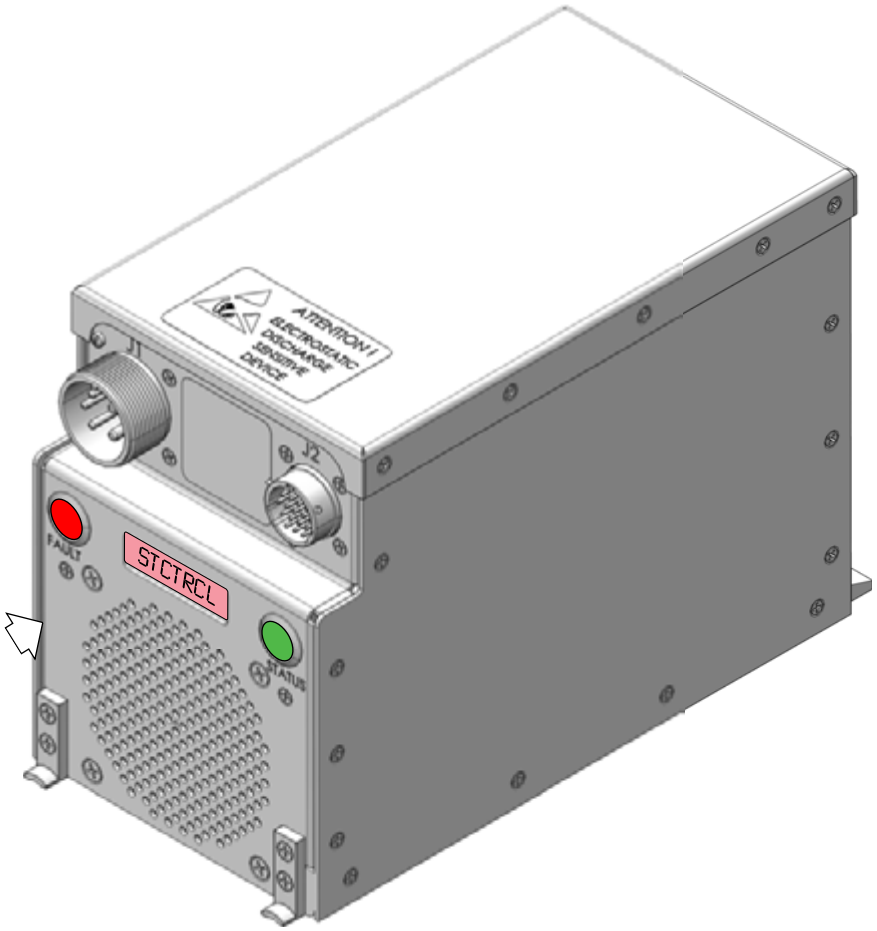

BATTERY CHARGER

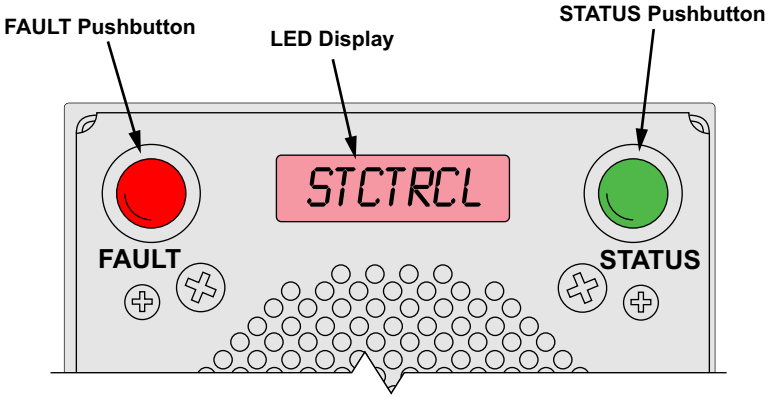

LED DISPLAY AND TEST PUSHBUTTONS

CS1_CS3_2402_015

Figure 28: Battery Charger Test

CAS MESSAGES

The following pages provides the crew alerting system (CAS) and INFO messages for DC electrical power generation.

Table 5: CAUTION Messages

MESSAGE	LOGIC
BATT 1 OVERTEMP	BATT 1 temperature greater than 71°C (160°F) resets below 65°C (150°F).
BATT 2 OVERTEMP	BATT 2 temperature greater than 71°C (160°F) resets below 65°C (150°F).
BATT DISCHARGING	BATT 1 and/or BATT 2 discharging for 5 minutes or more on the ground.
BATT 1 FAIL	BATT 1 charger detects a fault in the battery, or the battery is not installed, the BATT 1 switch is selected to AUTO and the BLC 1 is failed in the closed or open position or battery 1 is not connected to DC ESS BUS 1 when commanded by the BPCU.
BATT 2 FAIL	BATT 2 charger detects a fault in the battery, or the battery is not installed, the BATT 2 switch is selected to AUTO and the BLC 2 is failed in the closed or open position, or battery 2 is not connected to DC ESS BUS 2 when commanded by the BPCU.

Table 6: ADVISORY Messages

MESSAGE	LOGIC
BATT EMER PWR ON	Loss of all AC power sources in flight and the only power source is the battery system.
BATT CHARGER FAULT	Battery charger 1 and/or 2 inoperative (refer to INFO messages).
TRU FAULT	TRU 1, TRU 2 or TRU 3 failure or not connected to the respective DC BUS (refer to INFO messages).

Table 6: ADVISORY Messages

MESSAGE	LOGIC
ELECTRICAL FAULT	Loss of redundant or non-critical function for the electrical system (refer to INFO messages).

Table 7: STATUS Messages

MESSAGE	LOGIC
BATT 1 OFF	BATT 1 selected and confirmed off.
BATT 2 OFF	BATT 2 selected and confirmed off.
BATT PWR CONFIG	BATT PWR switch on HMU maintenance panel set to DC ESS BUS 3 position.

Copyright © Bombardier Inc.

Page Intentionally Left Blank

Table 8: INFO Messages

MESSAGE	LOGIC
24 BATT CHARGER FAULT - BATT CHARGER 1 INOP	Battery charger 1 BIT fail.
24 BATT CHARGER FAULT - BATT CHARGER 2 INOP	Battery charger 2 BIT fail.
24 ELECTRICAL FAULT - BATT 1 TEMP SNSR INOP	Battery 1 temperature sensor out of range for more than 2 seconds.
24 ELECTRICAL FAULT - BATT 2 TEMP SNSR INOP	Battery 2 temperature sensor out of range for more than 2 seconds.
24 ELECTRICAL FAULT - BATT 1 HEATER INOP	Battery 1 heater failed.
24 ELECTRICAL FAULT - BATT 2 HEATER INOP	Battery 2 heater failed.
24 TRU FAULT - TRU 1 INOP	TRU 1 fail.
24 TRU FAULT - TRU 2 INOP	TRU 2 fail.
24 TRU FAULT - TRU 3 INOP	TRU 3 fail.
24 TRU FAULT - TRU RIPPLE	TRU sensing ripple.
24 TRU FAULT - CBP INOP	Circuit breaker panel (flight deck) has an interface problem.

Copyright © Bombardier Inc.

PRACTICAL ASPECTS

BATTERY REMOVAL AND INSTALLATION

The weight of the aircraft batteries and their height above the ground requires the use of ground support equipment (GSE) to lift the battery to the required height. The battery must then be manually moved between the hoist and the aircraft.

CAUTION

Each battery weighs approximately 40 kg (89 lb).

Copyright © Bombardier Inc.

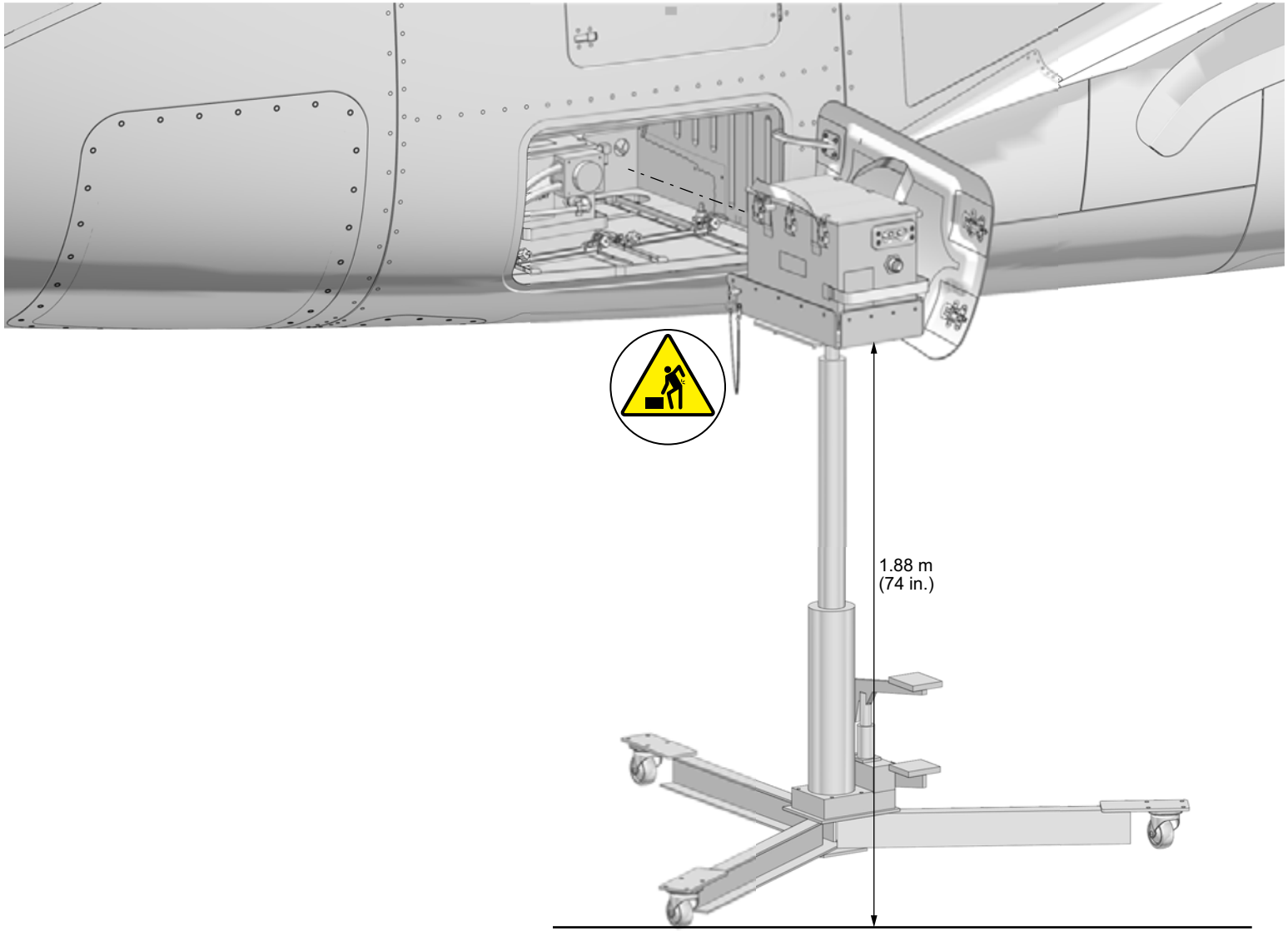

CS1_CS3_2402_016

Figure 29: Battery Hoist

24-33 FLY-BY-WIRE POWER CONVERTER SYSTEM

GENERAL DESCRIPTION

PERMANENT MAGNET ALTERNATOR GENERATOR

The permanent magnet alternator generator (PMAG) contains three separate power windings. Two of the power windings provide power to the two electronic engine control (EEC) channels on each engine. The other winding provides power to a fly-by-wire power converter (FBWPC).

Each power winding supplies 3-phase AC electrical power. The voltage output varies with engine speed.

FLY-BY-WIRE POWER CONVERTER

The purpose of the FBWPC is to provide 28 VDC power to the electronic flight control system. The left FBWPC also powers inertial reference unit no. 1.

During normal operation, the FBWPC is powered by DC BUS 1. If DC BUS 1 power is lost, the control and distribution cabinet (CDC) 1 de-energizes the PMAG control relay, allowing the PMAG to power the FBWPC. If the PMAG fails, BATT DIRECT BUS 1 provides a secondary source of backup power.

The right FBWPC receives power from DC BUS 2. The PMAG and BATT DIRECT BUS 2 are backup sources of power.

Each FBWPC has six independent outputs. Each output is monitored and protected by an internal circuit protection device (CPD). The CPDs are active current limiting electronic circuit breakers. Six toggle switches located on the front of the FBWPC enable, disable, and reset the individual CPDs. Removing and reinstating all power to the FBWPC also resets all CPDs. The status of each of the CPDs is monitored on the CB application in the flight deck. Refer to secondary power distribution for more information.

The status of the FBWPC is reported to the EICAS, the OMS, and HMU.

Copyright © Bombardier Inc.

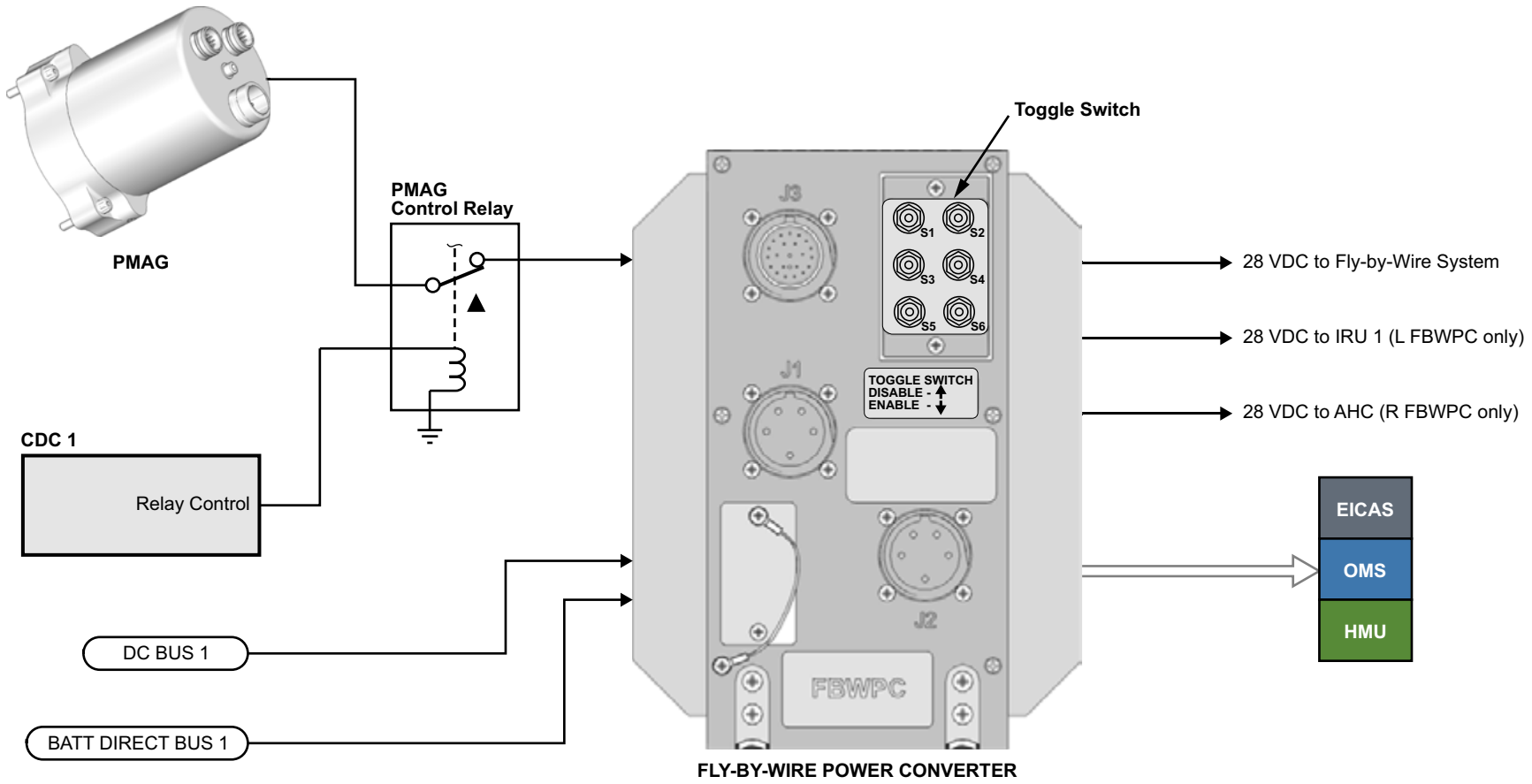

LEGEND

AHC	Attitude Heading Computer
CDC	Control and Distribution Cabinet
FBWPC	Fly-By-Wire Power Converter
PMAG	Permanent Magnet Alternator Generator

CS1_CS3_2402_002

NOTE

L FBWPC shown, R FBWPC similar.

Figure 30: DC Power Generation – Permanent Magnet Alternator Generator and Fly-By-Wire Power Converter

Copyright © Bombardier Inc.

COMPONENT LOCATION

PERMANENT MAGNET ALTERNATOR GENERATOR

A permanent magnet alternator generator (PMAG) is installed on the main gearbox of each engine.

FLY-BY-WIRE POWER CONVERTERS

Two fly-by-wire power converters (FBWPCs) are installed in the mid equipment bay.

Copyright © Bombardier Inc.

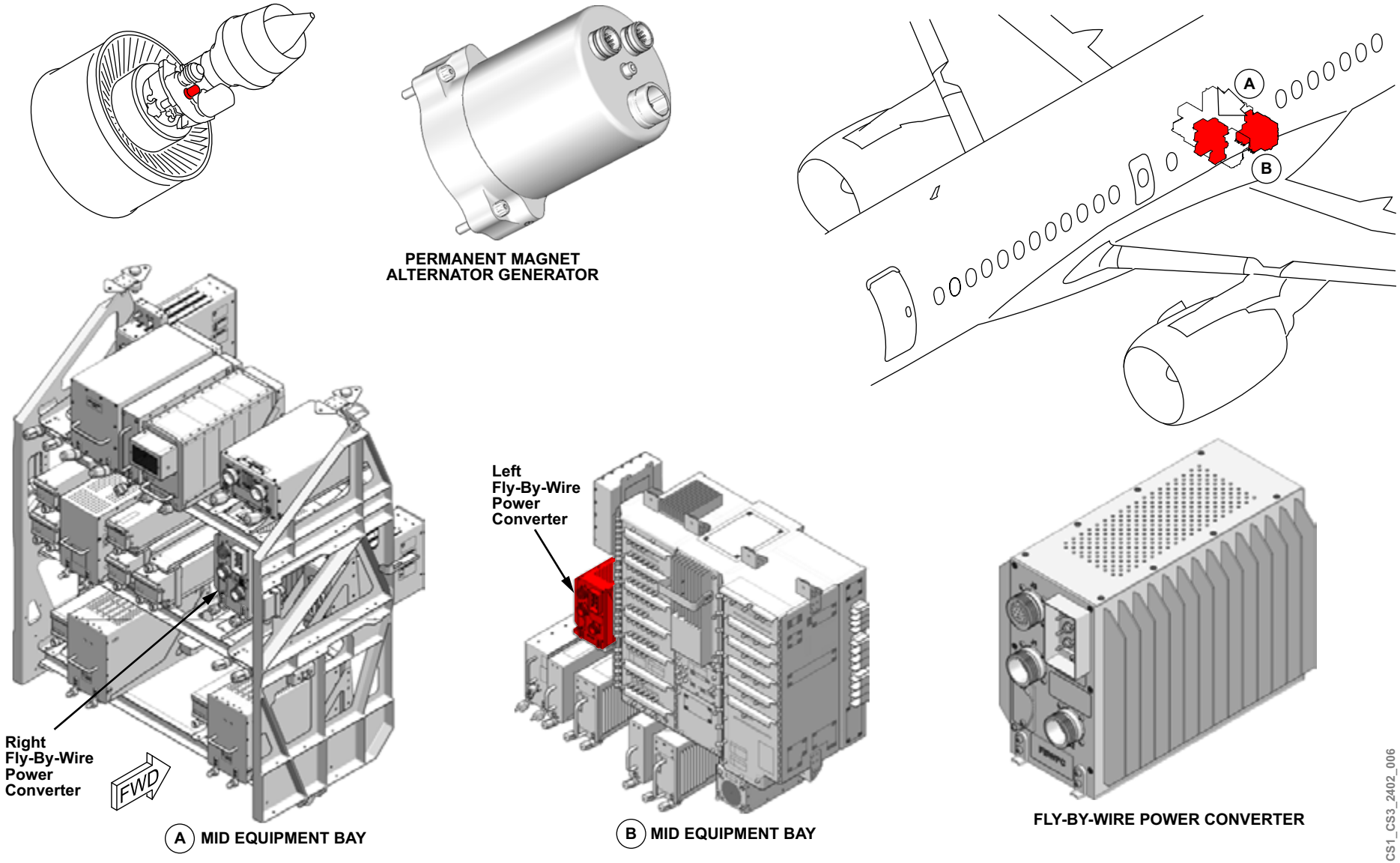

Figure 31: Permanent Magnet Alternator Generator and Fly-By-Wire Power Converter

Copyright © Bombardier Inc.

DETAILED COMPONENT INFORMATION

FLY-BY-WIRE POWER CONVERTER

The purpose of the FBWPC is to provide and protect 28 VDC power to multiple loads associated with the flight control system and IRU no. 1.

The FBWPC receives power from three independent sources in the following order of priority:

- Associated DC BUS
- Associated engine-mounted permanent magnet alternator generator (PMAG)
- Associated BATT DIRECT BUS

The FBWPC PMAG input power is processed by an internal PMAG converter to a nominal 28 VDC. The output of the PMAG converter, together with the DC BUS inputs, is supplied to a power supply switching logic. The switching logic selects the appropriate source of power and connects it to the loads.

During normal operation, with the DC BUS powered, the PMAG CTL RLY is energized and the DC BUS powers the FBWPC. If the DC BUS power is lost, the PMAG CTL RLY de-energizes and the PMAG provides 3-phase AC power to the FBWPC. The FBWPC is capable of converting between 33 VAC to 105 VAC into 28 VDC power.

When ground service mode is used, the FBWPC GS CTL RLY is energized by BPCU 1 to prevent DC BUS 1 power from being supplied to the left FWBPC.

If all AC power is lost in flight, the associated BATT DIR BUS powers the FBWPC for 30 seconds. This ensures the FBWPCs remain powered while the ram air turbine (RAT) deploys.

If the batteries are selected on, and are the only source of power, FBWPC does not turn on.

Each individual circuit protection device (CPD) is independently protected against overload and short circuit. The CPD power output current limiter prevents any CPD from providing more than 7.25 A. The overcurrent protective trip feature trips the individual CPD and disables its output, if the current exceeds 4.25A for more than 10 seconds.

The FBWPC sends status information to the DMCs using an ARINC 429 bus. CPD status is displayed on the CB page.

The FBWPC transmits PMAG operating information to the onboard maintenance system (OMS), such as:

- Input voltage and current
- CPD output voltage
- Current
- Status

It also relays configuration data to the OMS, including:

- Hardware part numbers
- Serial numbers
- Software part numbers
- Applicable cyclic redundancy checks (CRCs)

Copyright © Bombardier Inc.

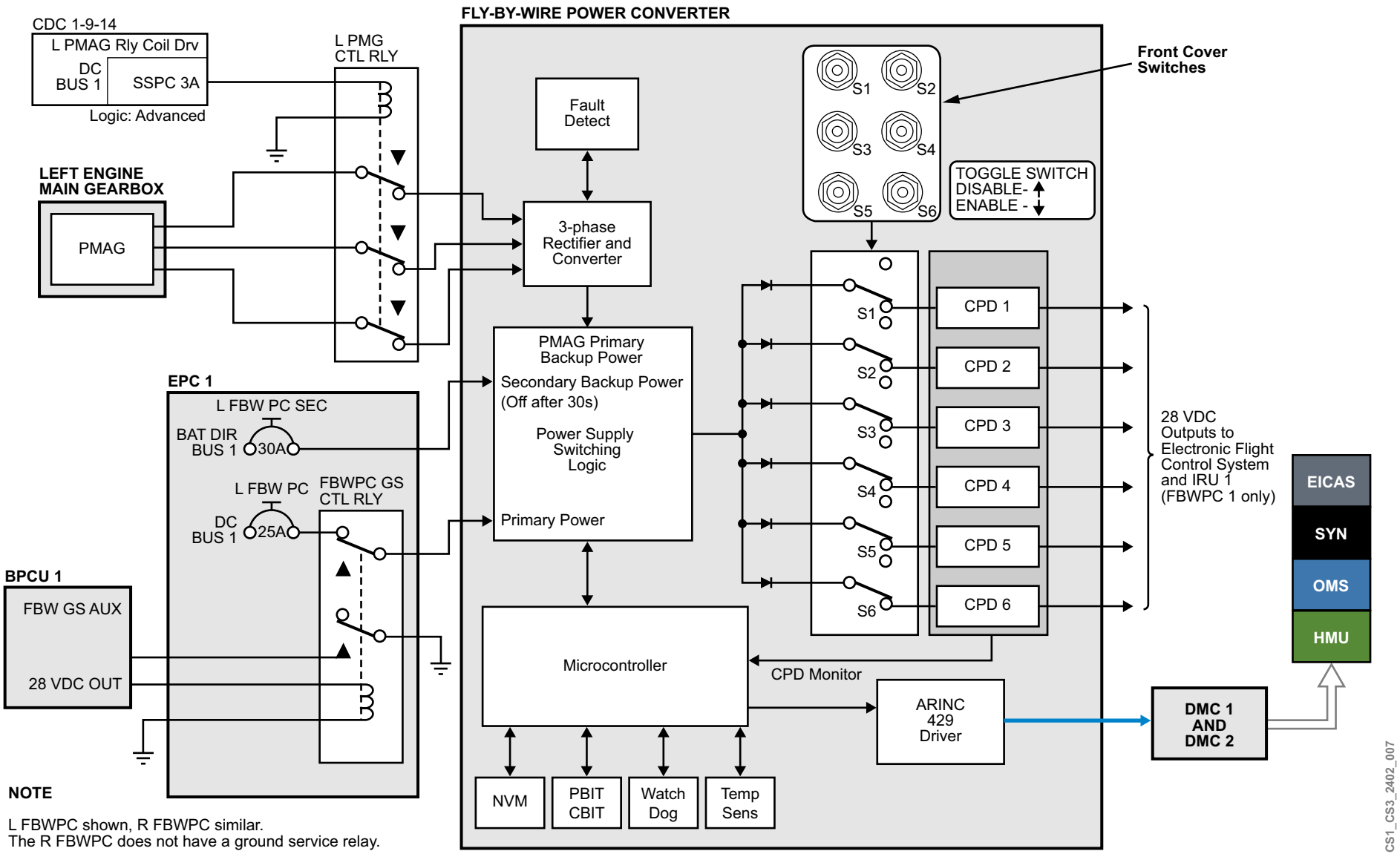

Figure 32: Fly-By-Wire Power Converter Detailed Block Diagram

MONITORING AND TESTS

The following page provides the crew alerting system (CAS) and INFO messages for the fly-by-wire power converter system.

Copyright © Bombardier Inc.

CAS MESSAGES

Table 9: ADVISORY Message

MESSAGE	LOGIC
ELECTRICAL FAULT	Loss of redundant or noncritical function for the electrical system (refer to INFO messages).

Table 10: INFO Messages

MESSAGE	LOGIC
24 ELECTRICAL FAULT - L FBW PC COM LOSS	Loss of communication with the L FBW PC end system.
24 ELECTRICAL FAULT - R FBW PC COM LOSS	Loss of communication with the R FBW PC end system.
24 ELECTRICAL FAULT - L FBW PC DEGRADED	L FBW PC minor fault.
24 ELECTRICAL FAULT - R FBW PC DEGRADED	R FBW PC minor fault.
24 ELECTRICAL FAULT - L FBW PC INOP	PMG feed for L FBW PC is not available while left engine is running.
24 ELECTRICAL FAULT - R FBW PC INOP	PMG feed for R FBW PC is not available while right engine is running.
24 ELECTRICAL FAULT - L FBW PC PMG INOP	PMG feed for L FBW PC is not available with left engine running.
24 ELECTRICAL FAULT - R FBW PC PMG INOP	PMG feed for R FBW PC is not available with left engine running.

Copyright © Bombardier Inc.

24-02 PRIMARY POWER DISTRIBUTION SYSTEM

GENERAL DESCRIPTION

The primary power distribution system includes all of the AC and DC power sources, which feed the AC and DC BUSES within the three electrical power centers (EPCs). These buses directly supply major power consumers, through circuit breakers, as well as provide power to the secondary power distribution system.

Each EPC contains physical separation barriers and firewalls to limit the effect of potential foreign object debris (FOD) damage, and to isolate potential fire hazards. These barriers are also used to isolate the components of the normal power distribution from those essential for flight.

Thermal circuit breakers, required to protect AC and DC outputs and inputs, are located on the outside of the EPCs. Crew monitoring of these circuit breakers is provided on the CB page in the flight deck, however reset of a tripped breaker requires maintenance personnel to access the equipment bay.

The contactors within EPC 1 and EPC 2 are controlled by bus power control units (BPCUs).

The BPCUs provide the control and protection functions for external power, BATT 1, BATT 2, TRU 1, TRU 2, DC BUS 1, DC BUS 2, DC ESS BUS 1, and DC ESS BUS 2.

The BPCUs provide control and protection functions for AC BUS 1 and AC BUS 2 in conjunction with GCUs.

The BPCUs provide load management functionality when the AC or DC sources are overloaded.

The emergency power control (EMPC) provides control and protection of primary power distribution within EPC 3.

NOTE

The EMPC unit controls the RAT autodeploy logic and provides a redundant overvoltage protection function for the RAT generating channel. For further information on these functions, refer to emergency power generation and distribution.

Copyright © Bombardier Inc.

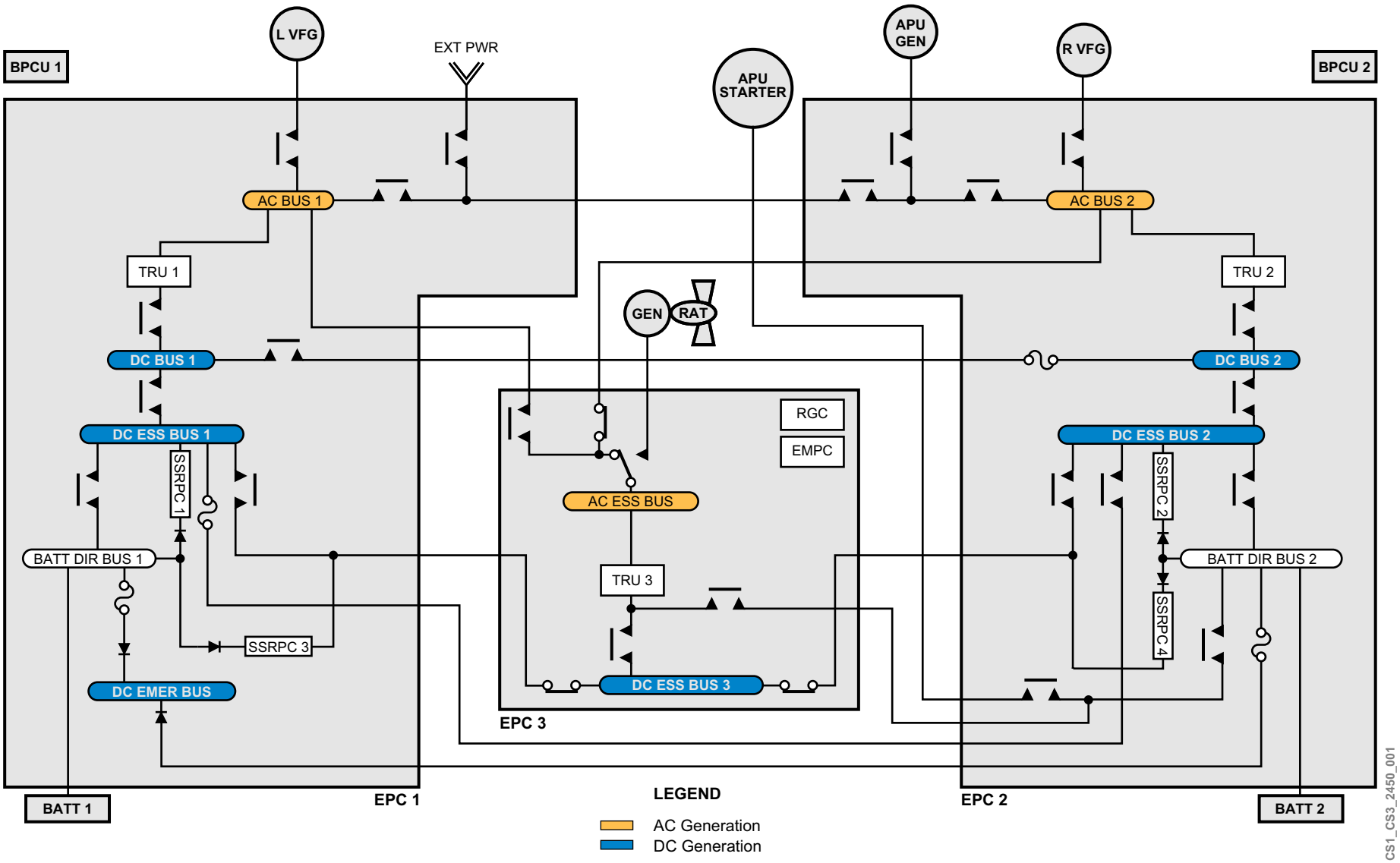

Figure 33: Primary Power Distribution System

COMPONENT LOCATION

The primary power distribution system consists of the following:

- Electrical power centers (EPCs)
- Bus power control units (BPCUs)
- Emergency power control (EMPC) unit

ELECTRICAL POWER CENTERS

EPC 1 and EPC 2 are installed in the mid equipment bay. EPC 3 is installed in the forward equipment bay.

Copyright © Bombardier Inc.

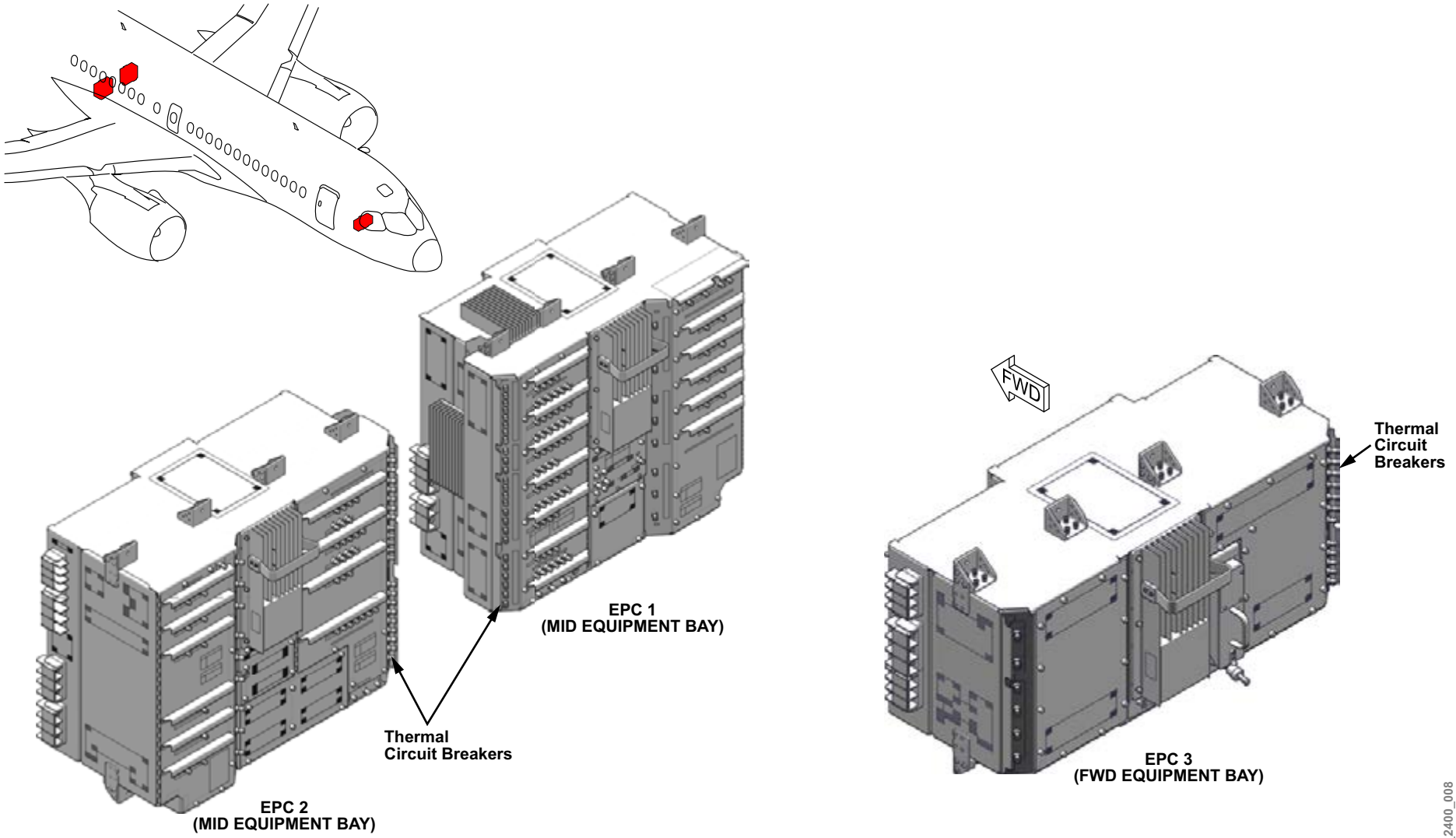

LEGEND

EPC Electrical Power Center

Figure 34: Electrical Power Centers

BUS POWER CONTROL UNITS

BPCU 1 and BPCU 2 are located in the mid equipment bay.

EMERGENCY POWER CONTROL

The emergency power control (EMPC) unit is a line replaceable module installed within EPC 3.

Copyright © Bombardier Inc.

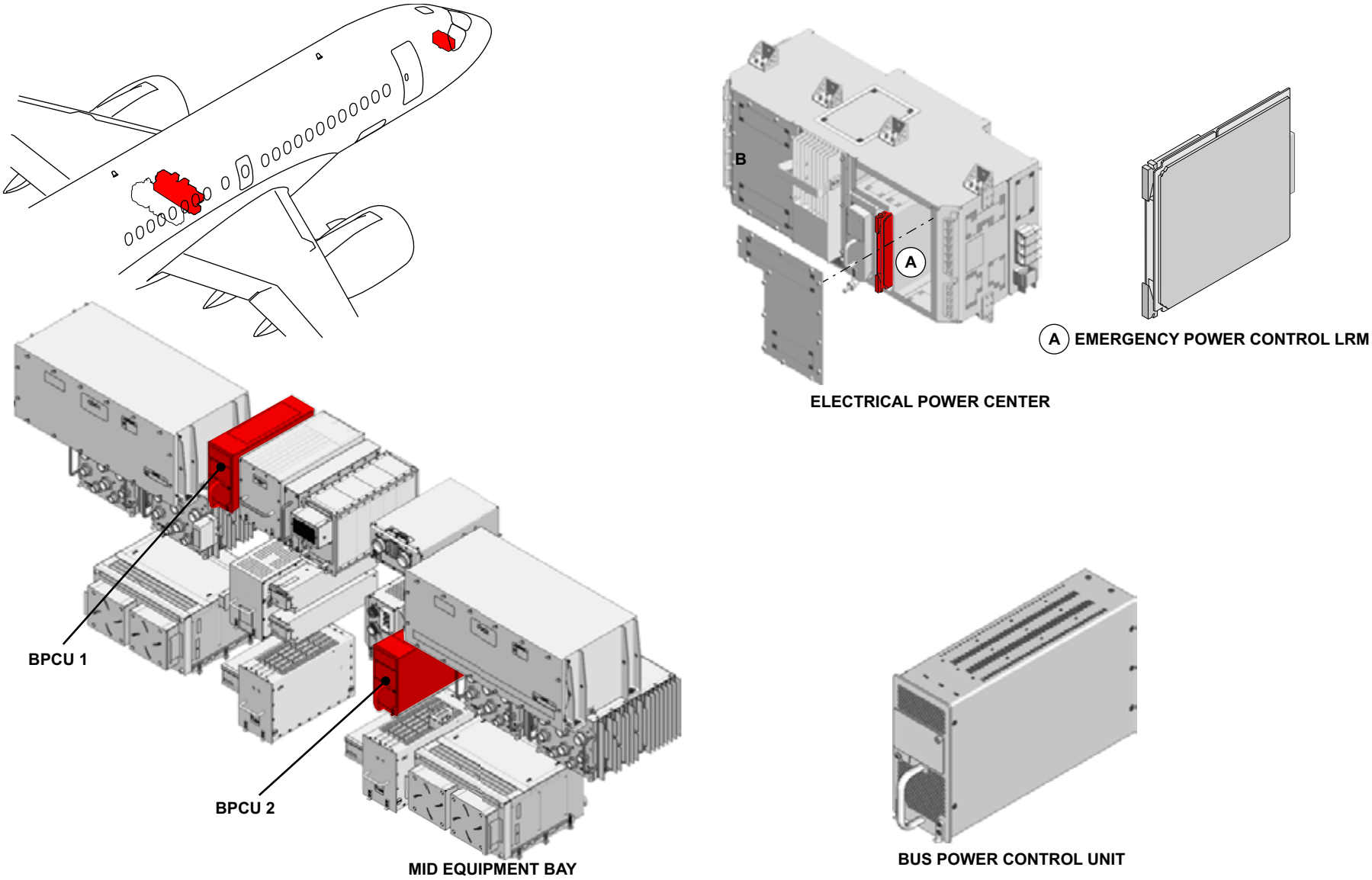

Figure 35: Bus Power Control Units and Emergency Power Control

DETAILED COMPONENT INFORMATION

ELECTRICAL POWER CENTER 1

EPC 1 contains the primary power distribution infrastructure for the left power channel. It contains an internal separation barrier between the AC power and normal DC power section, as well as between the DC power and essential DC power sections.

The AC distribution system receives and distributes the primary 3-phase AC power. AC input power may be received from the left variable frequency generator (VFG), external power, or from EPC 2. The bus tie function allows EPC 1 to supply power to EPC 2 or receive power from EPC 2.

The DC distribution system receives and distributes primary 28 VDC power. DC power is created using a 350 A transformer rectifier unit (TRU 1), BATT 1, and from one of several bus tie functions with EPC 2 or EPC 3.

The EPC incorporates contactors and solid-state remote power controllers (SSRPCs) to switch power to and from various DC BUSES. Power diodes ensure the correct power distribution.

Thermal circuit breakers, mounted on the outside of the EPC, as well as internal fuses, provide protection for distribution wires to the other EPCs, and loads supplied directly from the EPC.

An AC and DC circuit protective device detector (CPDD) monitors the state of the EPC CBs, including the fuses and related devices. The CPDD periodically reads, processes, and reports the state of the circuit protective devices (CPDs) in the EPC to CDC 1 via CAN buses. This information is sent to the DMCs for display on the circuit breaker page in the flight deck.

Current transformers are used throughout the EPC to provide measurement of current to the power feeds. These measurements are used by the generator control units (GCUs) and bus power control units (BPCUs) to identify current fault conditions. A Hall effect current sensor is used in the feed line from the battery to the battery direct bus to measure battery current draw.

The EPC also includes a number of relays. Some relays are used by the electrical power generation system. Other relays are hosted relays. Hosted relays are housed within the EPC, but are controlled by circuitry external to the EPC.

EPC 1 houses the motor pump contactor for hydraulic AC motor pump (ACMP) 2B. Current draw by the hydraulic pump is monitored by a current transformer upstream of the motor pump contactor. The BPCU monitors the current transformer to protect against excessive current draw by the AC motor pump.

An external power TRU provides DC power for BPCU operation when using external AC power. For additional information, refer to external AC power.

Discrete inputs, outputs, analog voltage and sensing data are provided to BPCU 1 and BPCU 2, for control and monitoring purposes.

APU Groomer Mode

On ground, the APU operates in a variable speed mode to optimize fuel burn and reduce emissions. The APU generator frequency varies between 400 Hz and 440 Hz. When the maintenance outlets are used in either galley 1 or 4, the APU is governed to a frequency of 400 Hz. In flight, the APU will always operate at 100% speed.

Copyright © Bombardier Inc.

LEGEND

ACMP	AC Motor Pump
BCT	Bus Tie Current Transformer
BLC	Battery Line Contactor
BPCU	Bus Power Control Unit
BTC	Bus Tie Contactor
CDC	Control and Distribution Cabinet
CPD	Circuit Protective Devices
DTC	DC Tie Contactor
ELC	External Power Line Contactor
EP	External Power
EPC	Electrical Power Center
EPCTA	External Power Current Transformer Assembly
EPGS	Electrical Power Generation System
ETC	Essential Tie Contactor
GLC	Generator Line Contactor
LCT	Line Current Transformer
MPC	Motor Pump Contactor
SSRPC	Solid-state Remote Power Controller
TCB	Thermal Circuit Breaker
TLC	TRU Line Contactor
TRU	Transformer Rectifier Unit
VFG	Variable Frequency Generator

CONTACTOR CONTROL

- BPCU 1
- BPCU 2
- Left GCU

BTC 1/2 are controlled by BPCUs and inhibited by GCUs.

For dual controlled contactors, primary control is indicated by the left-most symbol.

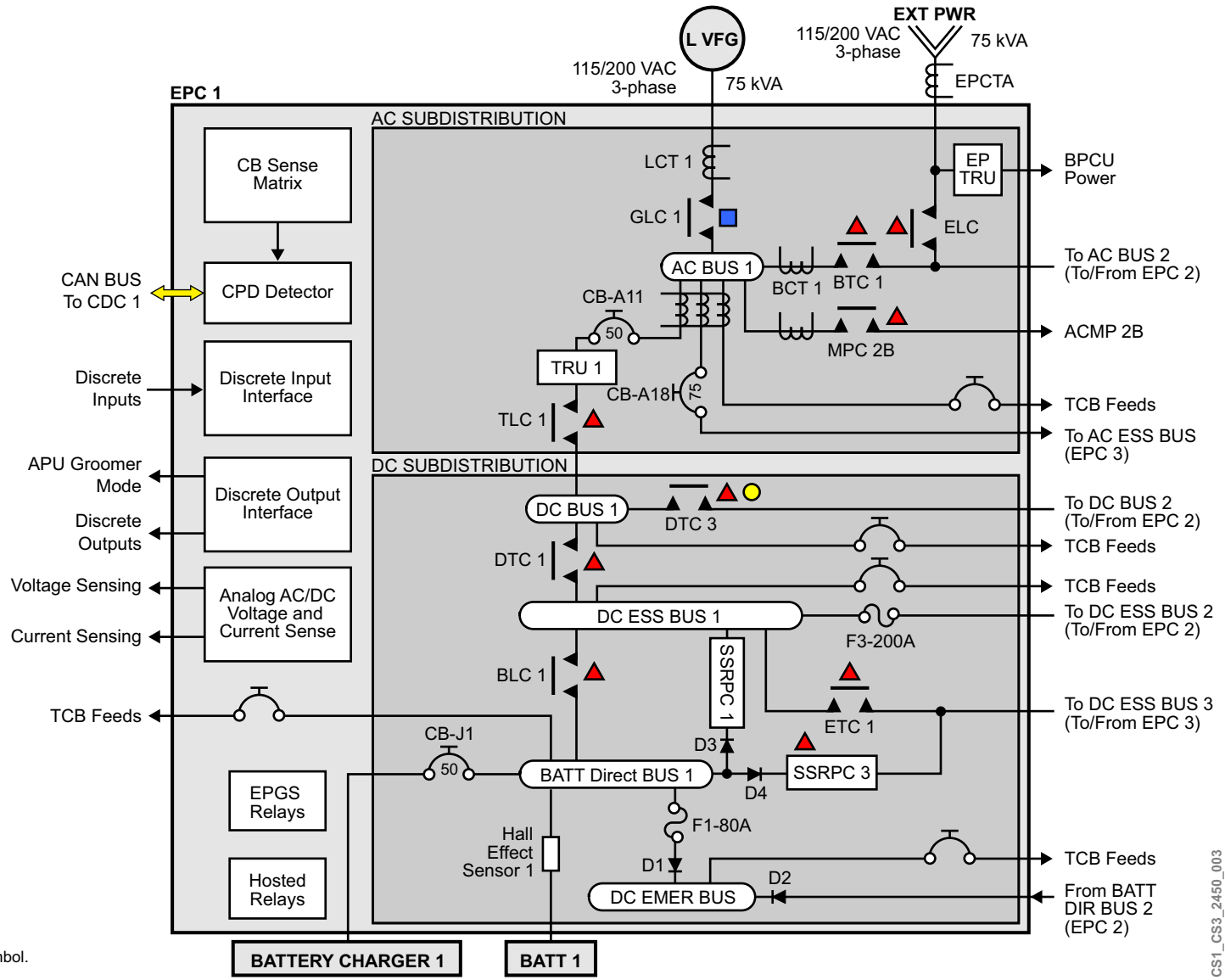

Figure 36: Electrical Power Center 1

ELECTRICAL POWER CENTER 1 LINE REPLACEABLE COMPONENTS

Electrical power center (EPC) 1 has the following line replaceable components:

- Diodes 1 and 2
- E brake relay 1
- E brake relay 2
- Solid-state remote power controller 3
- Solid-state remote power controller 1
- Battery 1 hall effect sensor
- Fuse 1 and fuse detector
- Diodes 3 and 4
- Fuse 5
- Battery line contactor 1
- Fuse 3 and fuse detector
- DC tie contactor 1
- Essential tie contactor 1
- TLC driver electronic board
- DC tie contactor 3
- TRU line contactor 1
- Fly-by-wire power converter relay
- Circuit protection device detector 1
- Maintenance mode relay
- Hydraulic system no. 1 shutoff valve relay
- Battery 1 slave relay
- Emergency relay 1
- AC slave relay 1
- Bus tie contactor 1
- External power transformer rectifier unit
- Extraction fan contactor 2
- External line contactor
- Generator line contactor 1
- Motor pump contactor 2B

WARNING

WHEN WORKING INSIDE EPC 1, MAKE SURE BATTERIES 1 AND 2 ARE DISCONNECTED. IF THE BATTERIES ARE CONNECTED, INJURY TO PERSONNEL AND DAMAGE TO EQUIPMENT MAY OCCUR.

Copyright © Bombardier Inc.

LEGEND

1. Diodes 1 and 2
2. E Brake Relay 1
3. E Brake Relay 2
4. Solid-State Remote Power Controller 3
5. Solid-State Remote Power Controller 1
6. Battery 1 Hall Effect Sensor
7. Fuse 1 and Fuse Detector
8. Diodes 3 and 4
9. Fuse 5
10. Battery Line Contactor 1
11. Fuse 3 and Fuse Detector
12. DC Tie Contactor 1
13. Essential Tie Contactor 1
14. TLC Driver Electronic Board
15. DC Tie Contactor 3
16. TRU Line Contactor 1
17. Fly-By-Wire Power Converter Relay
18. Circuit Protection Device Detector 1
19. Maintenance Mode Relay
20. Hydraulic System No. 1 Shutoff Valve Relay
21. Battery 1 Slave Relay
22. Emergency Relay 1
23. AC Slave Relay 1
24. Bus Tie Contactor 1
25. External Power Transformer Rectifier Unit
26. Extraction Fan Contactor 2
27. External Line Contactor
28. Generator Line Contactor 1
29. Motor Pump Contactor 2B

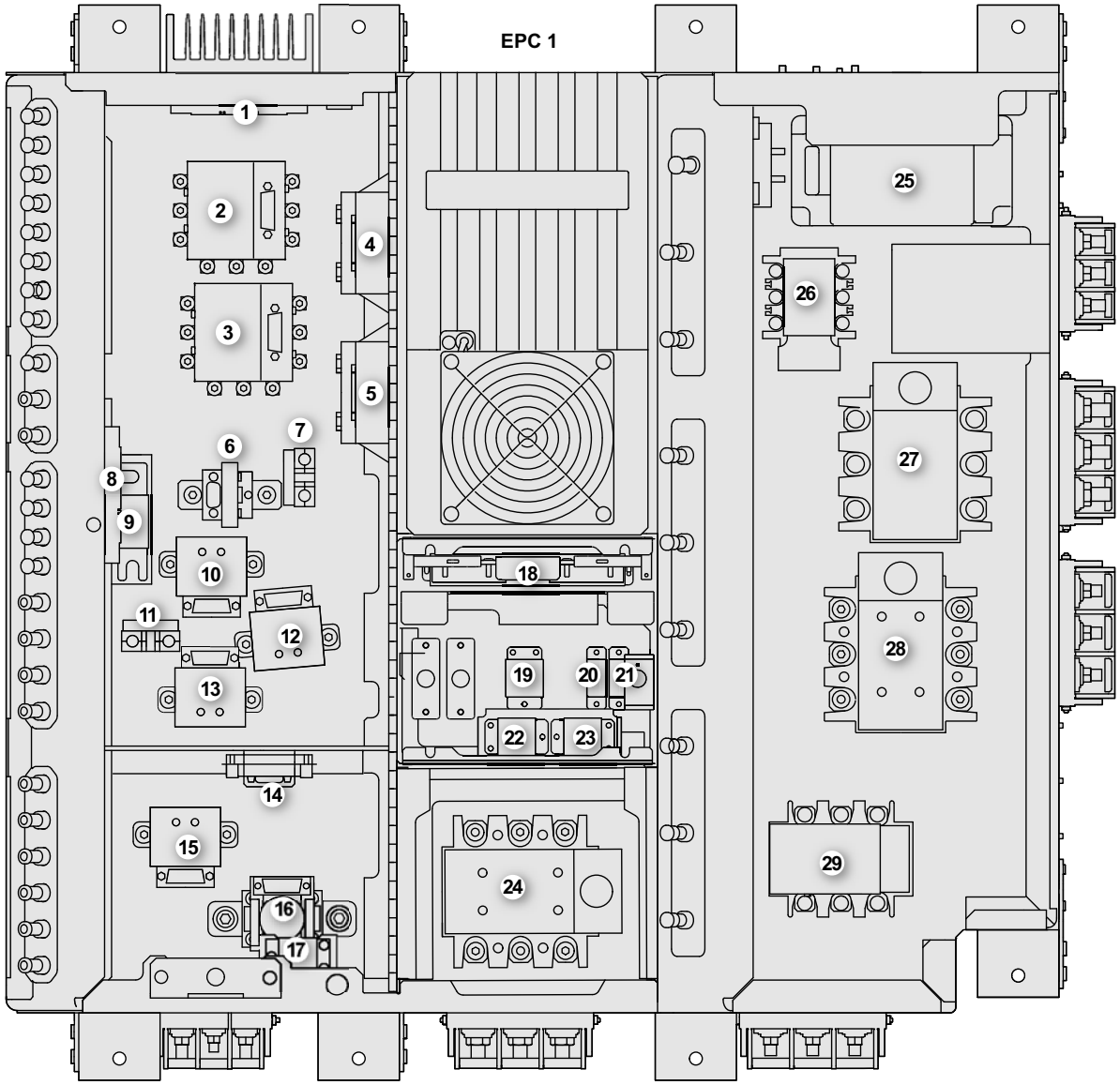

Figure 37: Electrical Power Center 1 Line Replaceable Components

ELECTRICAL POWER CENTER 2

EPC 2 contains the primary power distribution infrastructure for the right power channel, and the APU generating channel. EPC 2 contains an internal separation barrier between the normal DC power and essential DC power sections, an internal separation barrier between the normal AC power (AC BUS 2) and normal DC power sections, and an internal firewall between the APU generator and normal AC power (AC BUS 2) sections.

AC input power can be received from the right VFG, APU generator power, or from EPC 1. The bus tie function allows EPC 2 to supply power to EPC 1 or receive power from EPC 1.

The DC distribution system receives and distributes primary 28 VDC power. DC power is created using a 350 A transformer rectifier unit (TRU 2), BATT 2, and from one of several bus tie functions with EPC 1 or EPC 3.

The EPC incorporates contactors and solid-state remote power controllers (SSRPCs) to switch power to and from various DC BUSES. Power diodes ensure the correct power distribution.

Thermal circuit breakers, mounted on the outside of the EPC, as well as internal fuses, provide protection for distribution wires to the other EPCs and loads supplied directly from the EPC.

An AC and DC circuit breaker sense matrix monitors the state of the EPC circuit breakers, which includes fuses. The CB sense matrix periodically reads, processes, and reports the state of the CPDs in the EPC to CDC 2 via CAN BUSES. This information is sent to the DMCs for display on the CB page in the flight deck.

Current transformers are used throughout the EPC to provide measurement of current to the power feeds. These measurements are used by the GCUs and BPCUs to identify current fault conditions. A hall-effect current sensor is used in the feed line from the battery to the battery direct bus to measure battery current draw.

The EPC includes relays, which the electrical power generation system uses, as well as hosted relays. These hosted relays are housed within the EPC, but use circuitry external to the EPC.

EPC 2 houses the motor pump contactors for hydraulic AC motor pump (ACMP) 3A and 3B. Current draw by the hydraulic pumps is monitored by a current transformer upstream of the motor pump contactor. The BPCU monitors the current transformer to protect against excessive current draw by the AC motor pump.

Discrete inputs, outputs, analog voltage, and sensing data are provided to BPCU 1 and BPCU 2 for control and monitoring purposes.

Copyright © Bombardier Inc.

LEGEND

ACMP	AC Motor Pump
ACT	APU Current Transformer
ALC	APU Line Contactor
ASC	APU Start Contactor
BCT	Bus Tie Current Transformer
BLC	Battery Line Contactor
BSC	Battery Start Contactor
BTC	Bus Tie Contactor
CDC	Control and Distribution Cabinet
CPD	Circuit Protective Devices
CT	Current Transformer
DTC	DC Tie Contactor
EPC	External Power Center
EPGS	Electrical Power Generation System
ETC	Essential Tie Contactor
GLC	Generator Line Contactor
LCT	Line Current Transformer
MPC	Motor Pump Contactor
SSRPC	Solid-state Remote Power Controller
TCB	Thermal Circuit Breaker
TLC	TRU Line Contactor
TRU	Transformer Rectifier Unit
VFG	Variable Frequency Generator

CONTACTOR CONTROL

- AGCU
- BPCU 1
- BPCU 2
- CDC
- Right GCU

BTC 1/2 are controlled by BPCUs and inhibited by GCUs.

For dual controlled contactors, primary control is indicated by the left-most symbol.

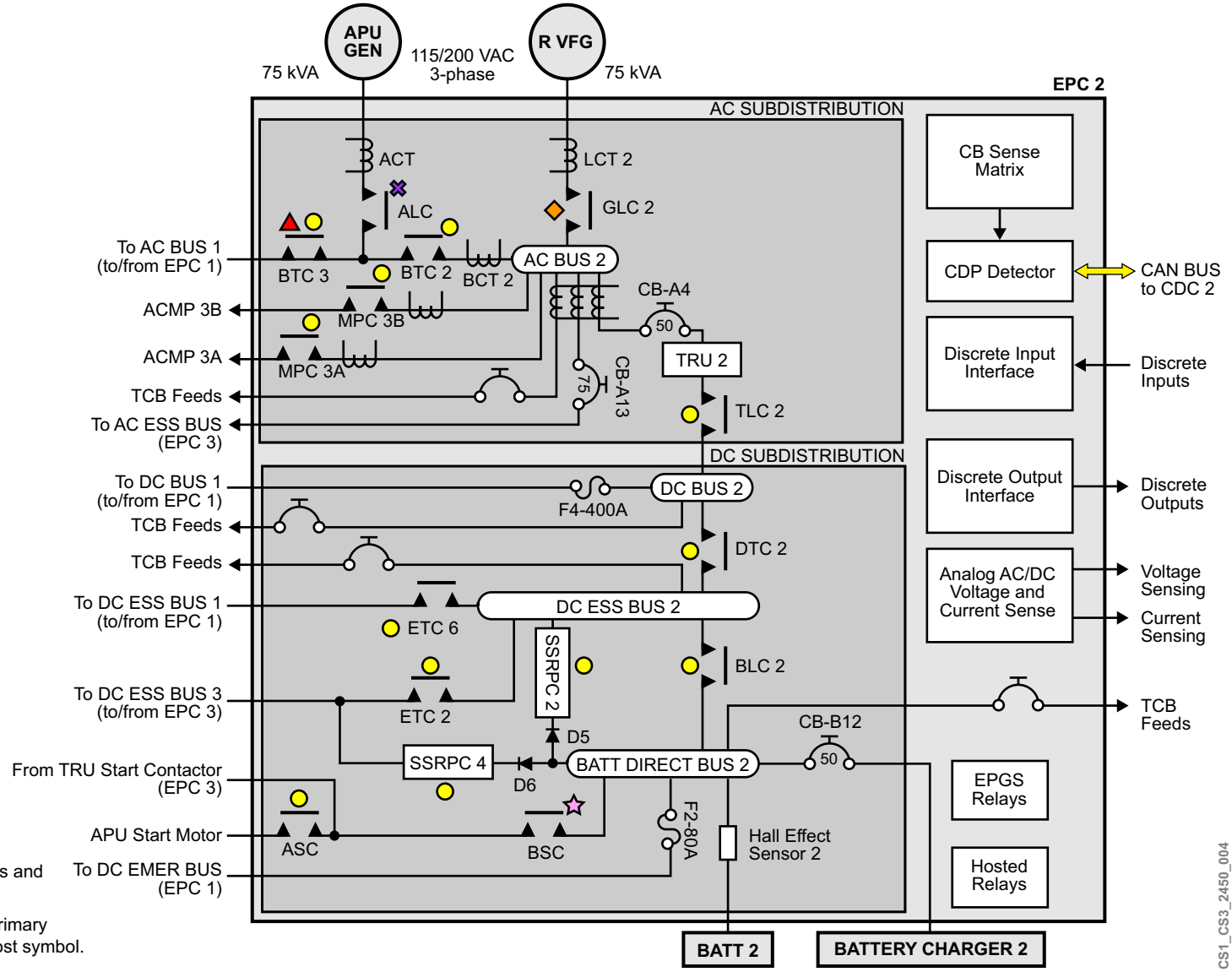

Figure 38: Electrical Power Center 2

ELECTRICAL POWER CENTER 2 LINE REPLACEABLE COMPONENTS

Electrical power center (EPC) 2 has the following line replaceable components:

- Extraction fan contactor 1
- Generator line contactor 2
- Recirculation fan
- Bus tie contactor 2
- Motor pump contactor 3A
- Motor pump contactor 3B
- Circuit protection device detector 2
- Cabin pressure relay
- Essential tie contactor 6
- DC tie contactor 2
- APU line contactor
- Hydraulic system no. 2 shutoff valve relay
- E brake relay 4
- E brake relay 3
- Solid-state remote power controller 4
- Battery 1 hall effect sensor
- Fuse 2 and fuse detector
- Fuse 6
- Battery start contactor
- APU start contactor
- Solid-state remote power controller 2
- Battery line contactor 2
- Essential tie contactor 2
- Battery 2 slave relay
- AC slave relay 2
- Emergency relay 2
- Diodes 5 and 6
- TRU line contactor 2
- TLC driver electronic board
- Bus tie contactor 3
- Fuse 4

WARNING

WHEN WORKING INSIDE EPC 2, MAKE SURE BATTERY 2 IS DISCONNECTED. IF THE BATTERY IS CONNECTED, INJURY TO PERSONNEL AND DAMAGE TO EQUIPMENT MAY OCCUR.

Copyright © Bombardier Inc.

LEGEND

1. Extraction Fan Contactor 1
2. Generator Line Contactor 2
3. Recirculation Fan
4. Bus Tie Contactor 2
5. Motor Pump Contactor 3A
6. Motor Pump Contactor 3B
7. Circuit Protection Device Detector 2
8. Cabin Pressure Relay
9. Essential Tie Contactor 6
10. DC Tie Contactor 2
11. APU Line Contactor
12. Hydraulic System No. 2 Shutoff Valve Relay
13. E Brake Relay 4
14. E Brake Relay 3
15. Solid-State Remote Power Controller 4
16. Battery 1 Hall Effect Sensor
17. Fuse 2 and Fuse Detector
18. Fuse 6
19. Battery Start Contactor
20. APU Start Contactor
21. Solid-State Remote Power Controller 2
22. Battery Line Contactor 2
23. Essential Tie Contactor 2
24. Battery 2 Slave Relay
25. AC Slave Relay 2
26. Emergency Relay 2
27. Diodes 5 and 6
28. TRU Line Contactor 2
29. TLC Driver Electronic Board
30. Bus Tie Contactor 3
31. Fuse 4

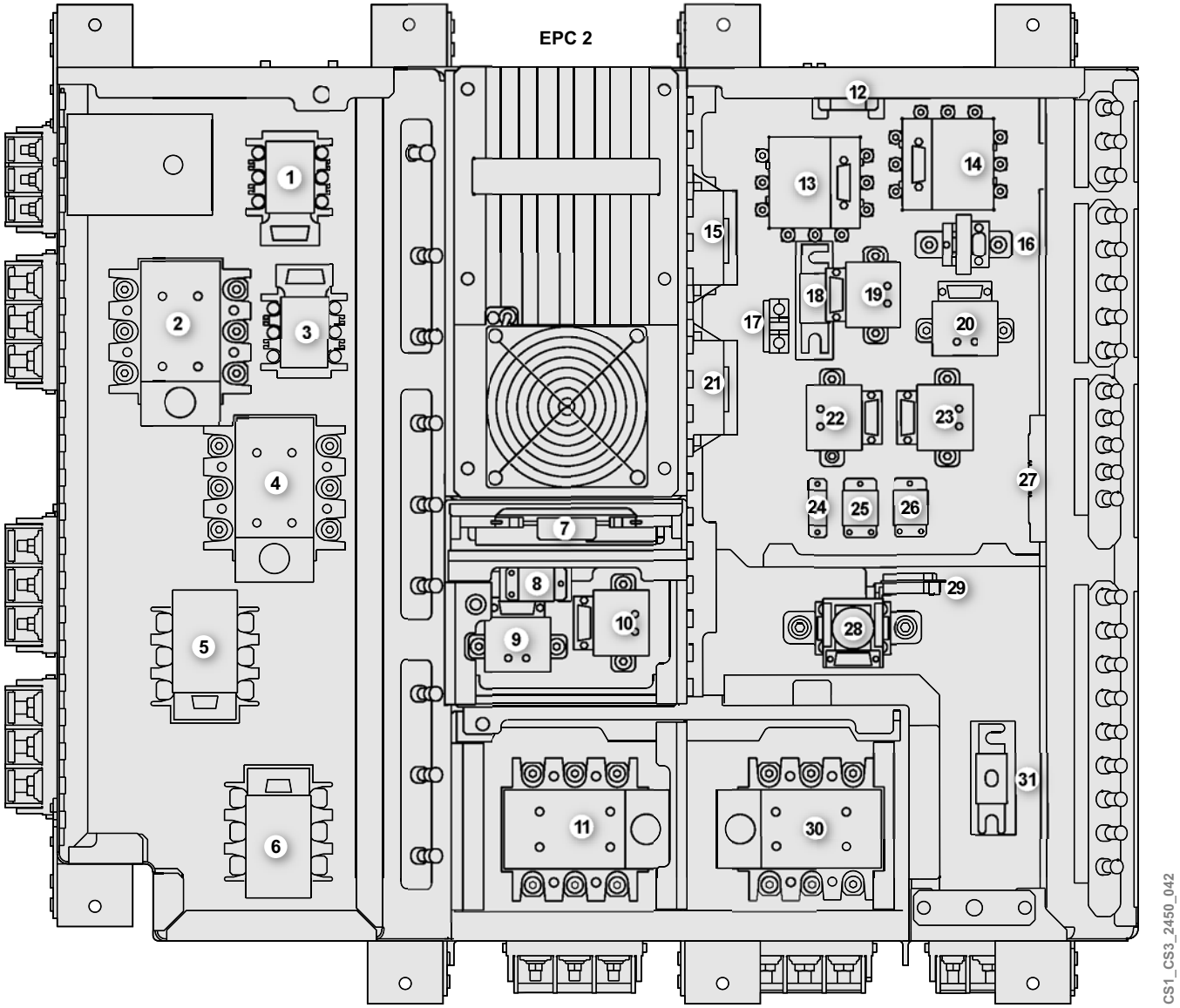

Figure 39: Electrical Power Center 2 Line Replaceable Components

Copyright © Bombardier Inc.

ELECTRICAL POWER CENTER 3

EPC 3 contains the primary power distribution infrastructure for the emergency power channel. EPC 3 contains an internal separation barrier between the AC distribution and DC distribution.

EPC 3 receives, and distributes aircraft power for the AC ESS BUS and DC ESS BUS 3.

The AC distribution system receives and distributes the 3-phase AC power from either AC BUS 1 or AC BUS 2, or the RAT generator if in the emergency mode.

The DC distribution system generates and distributes power to DC ESS BUS 3. TRU 3 provides the main DC power input when the AC ESS BUS is powered. Input power can be received from BATT 1, BATT 2, TRU 1 (EPC 1), or TRU 2 (EPC 2) from across the DC TIE BUS when TRU 3 is not operative.

Thermal circuit breakers, mounted on the outside of the EPC, as well as internal fuses, provide protection for distribution wires to the other EPCs and loads supplied directly from the EPC.

An AC and DC circuit breaker sense matrix monitors the state of the EPC circuit breakers, including fuses and related devices. The sense matrix periodically reads, processes, and reports the state of CBs in the EPC via the circuit protective device detector (CPDD) to CDC 2 via CAN buses. This information is displayed on the CB page.

The EPC also include relays used by the electrical power generation system as well as hosted relays.

Discrete inputs, outputs, analog voltage, and sensing data are provided to BPCU 1 and BPCU 2 for control and monitoring purposes.

Copyright © Bombardier Inc.

LEGEND

CDC	Control and Distribution Cabinet
CPD	Circuit Protective Devices
EBC	Essential Bus Contactor
EMPC	Emergency Power Control
EPC	Electrical Power Center
ETC	Essential Tie Contactor
RAT	Ram Air Turbine
RGC	RAT Generator Control
RLC	RAT Line Contactor
TCB	Thermal Circuit Breaker
TLC	TRU Line Contactor
TRU	Transformer Rectifier Unit
TSC	TRU Start Contactor

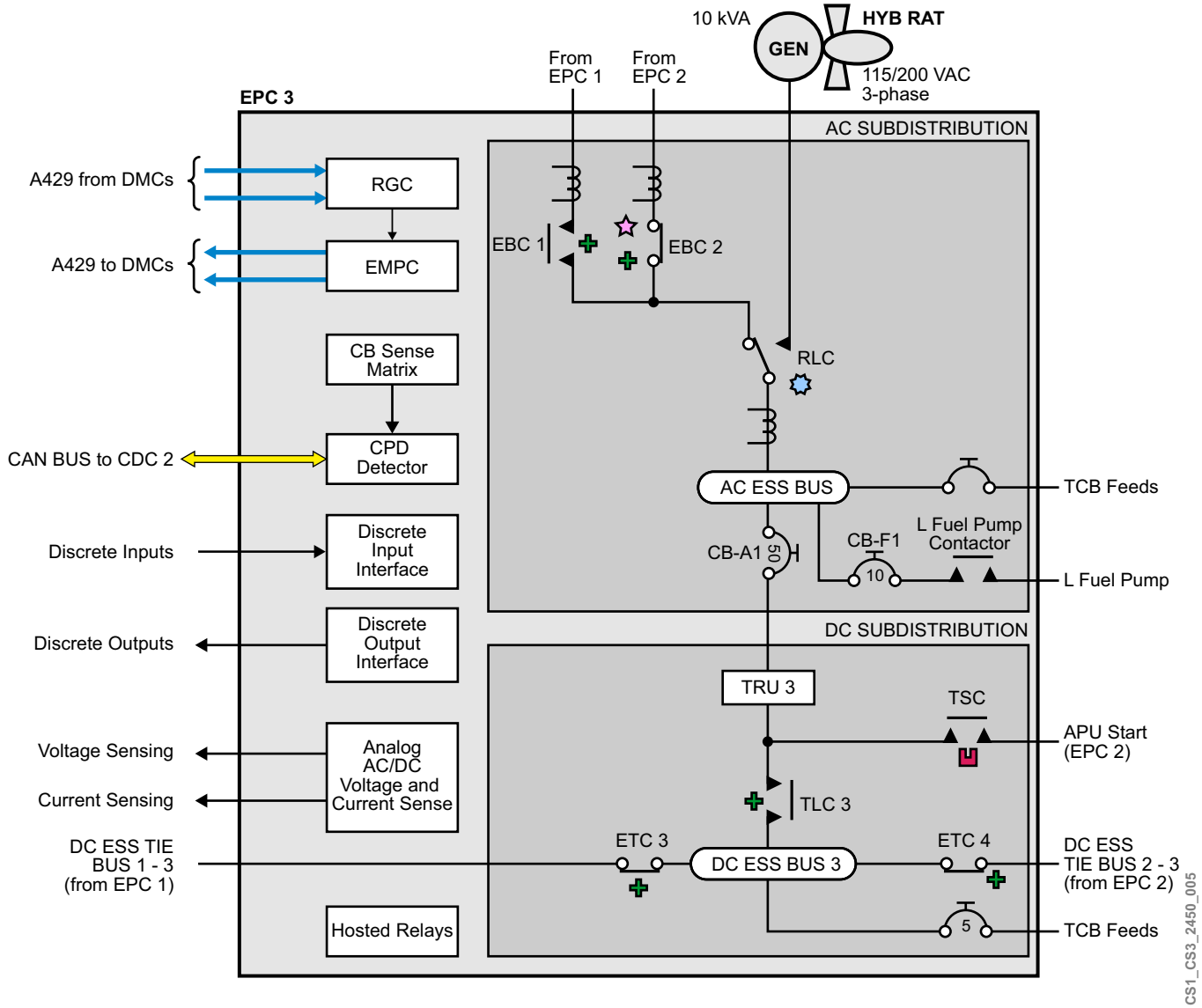

CONTACTOR CONTROL

- EMPC
- RGC
- CDC 4
- CDC 1

Figure 40: Electrical Power Center 3

ELECTRICAL POWER CENTER 3 LINE REPLACEABLE UNITS

Electrical power center (EPC) 3 has the following line replaceable components:

- RAT line contactor
- Essential bus contactor 1
- Left fuel pump relay
- Essential bus contactor 2
- Circuit protection device detector 3
- Landing gear relay 1
- Landing gear relay 2
- TRU line contactor 3
- TRU start contactor
- Essential tie contactor 4
- Essential tie contactor 3

Copyright © Bombardier Inc.

LEGEND

1. RAT Line Contactor
2. Essential Bus Contactor 1
3. Left Fuel Pump Relay
4. Essential Bus Contactor 2
5. Circuit Protection Device Detector 3
6. Landing Gear Relay 1
7. Landing Gear Relay 2
8. TRU Line Contactor 3
9. TRU Start Contactor
10. Essential Tie Contactor 4
11. Essential Tie Contactor 3

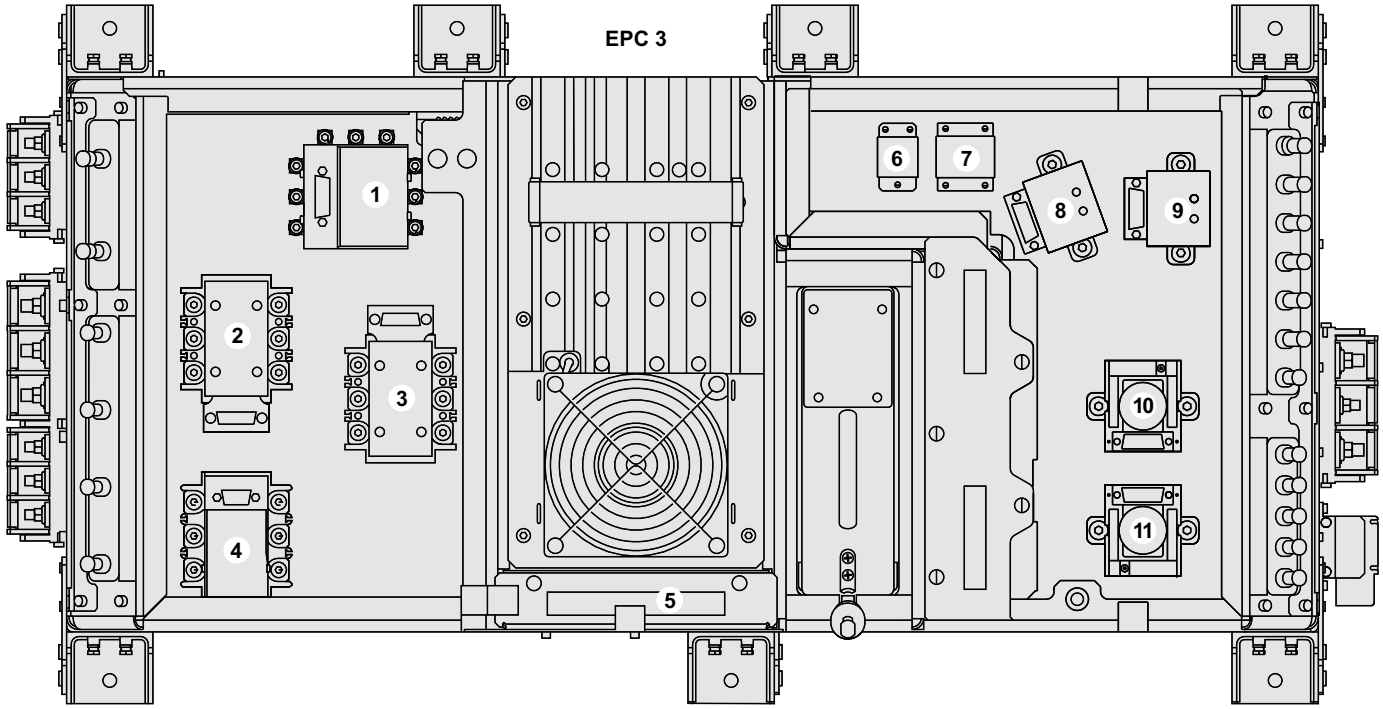

CS1_CS3_2450_043

Figure 41: Electrical Power Center 3 Line Replaceable Components

Copyright © Bombardier Inc.

CIRCUIT PROTECTIVE DEVICE DETECTOR

Each of the three EPCs contains a circuit protection device detector (CPDD) module. The CPDD is responsible for monitoring fuses, circuit breakers, and relays of various subsystems, and sending the status summary via the two controller area network (CAN) buses to its associated CDC (CDC 1 or CDC 2).

The CPDD is a separate circuit board within the EPC. It is pin programmed to identify the EPC where it is installed. The CPDD features an automatic built in test intended to verify CPDD wiring health. The BIT report is transmitted via the CAN BUSES.

The following methods are used to monitor the status of the circuit protection devices:

- Direct reading of auxiliary contacts
- Indirect reading of CB auxiliary contacts through a circuit breaker matrix
- Indirect reading using voltage measurement

Fuses rated at less than 200 A, DC circuit breakers less than 50 A AC circuit breakers, and various relays use auxiliary contacts to report their status. DC CBs greater than 50 A and fuses greater than 200 A use voltage measurement for status reporting.

EPC 1 and EPC 2 contain a circuit breaker matrix that can indirectly monitor the status of the CB. The matrix is an arrangement of several rows of multiple CB auxiliary contacts. The auxiliary contacts are accessed by activating the corresponding column with a discrete output signal. The matrix contains control diodes to check the status of the lines.

Voltage measurement of high-current demand devices uses two discrete inputs to measure the voltage at the input and output of the device. A voltage differential is indicative of an open device.

The CPDD performs power-on built-in test (PBIT) and continuous built-in test (CBIT) checking.

NOTE

The auxiliary contacts used by the CPDD are not shown on electrical schematics.

Copyright © Bombardier Inc.

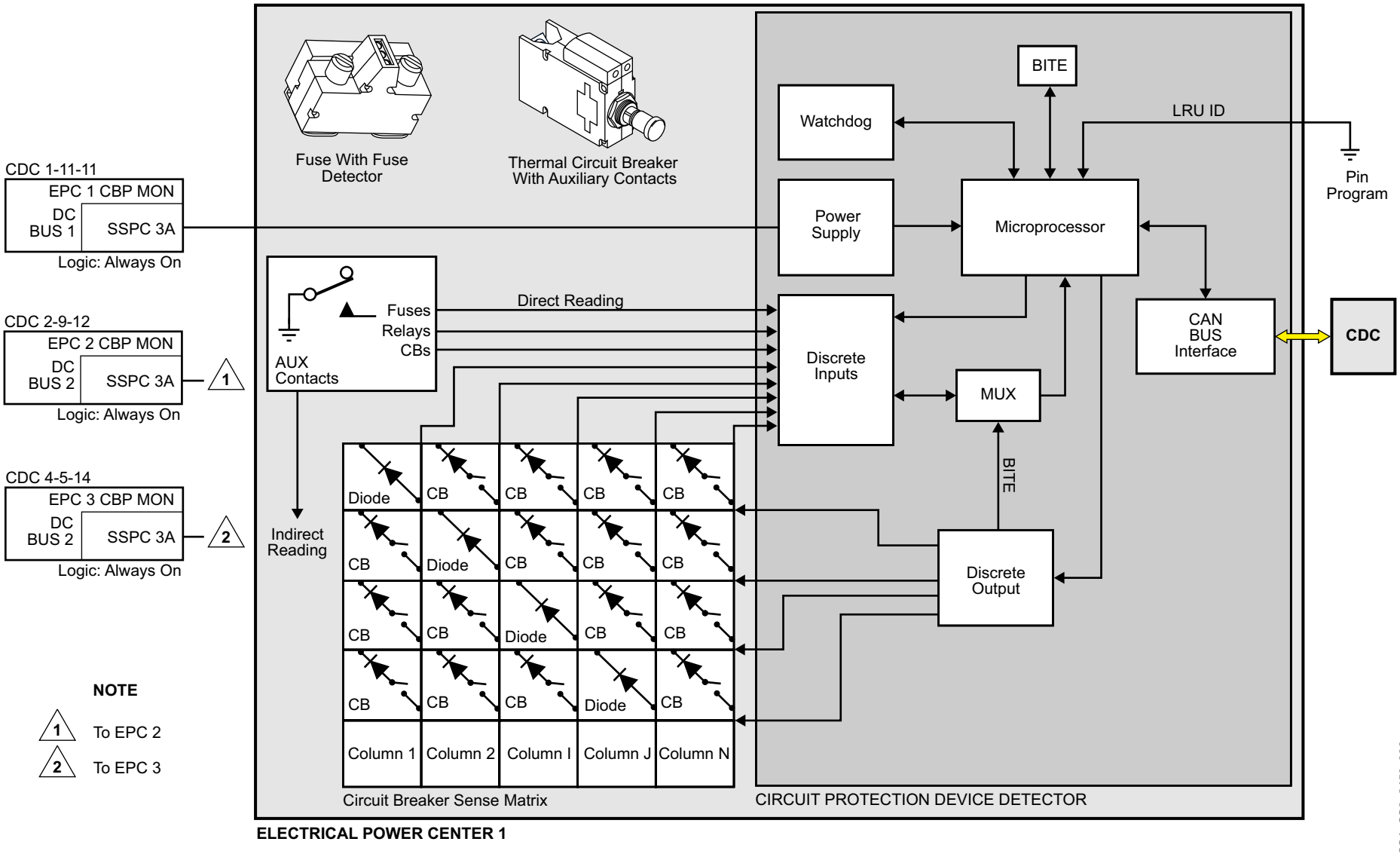

Figure 42: Circuit Protective Device Detector

BUS POWER CONTROL UNITS

BPCU 1 provides external power control, load management, and control to bus contactors on the left side of the aircraft. BPCU 2 provides APU start contactor control, load management, and control to contactors on the right side of the aircraft.

BPCU 1 and BPCU 2 receive internal power from DC ESS BUS 1, DC ESS BUS 2, and external power through the EP TRU. BPCU 1 and BPCU 2 also receive backup power from DC EMER BUS when the other power feeds are not available. In maintenance mode, BPCU 1 receives power from the DC EMER BUS through a maintenance mode relay.

To monitor the status of the electrical system, the BPCUs receive the following AC analog inputs:

- External AC voltage and current
- AC bus voltage and current
- Line and tie bus current

The BPCU also receives analog 28 VDC inputs:

- DC bus voltage
- DC bus current

Discrete inputs include control panel switch position, WOW, pin programming, and status information from other control units including the opposite BPCU.

The two primary functions of the BPCU are to perform power source/bus transfers, and coordinate load management. Load management and power transfers coordinate with other LRUs over redundant communication. This means that if one bus becomes non-operational, the LRUs will use data from an operational bus. The BPCU will communicate over redundant TTP networks to CDC 1, CDC 2, all GCUs and the other BPCU.

The BPCU protects the external AC source and TRU, generates CAS messages, and BITE.

For primary power distribution control, the BPCUs work with the GCUs to distribute power from all currently available sources to each power bus. The power sources are configured to operate in split bus mode.

TRANSFORMER RECTIFIER UNIT OVERCURRENT

TRU 1 and TRU 2 output current is sensed by a shunt internal to the TRU and monitored by the BPCUs to obtain information necessary to perform TRU 1 and TRU 2 overcurrent (OC) protection.

The source of the overcurrent is isolated by the BPCU sequentially opening downstream contactors in rapid succession until the OC condition is no longer active. The BPCU sequencing logic also re-enables downstream contactors to enable automatic reconfiguration of serviceable buses.

TRU 1 and TRU 2 OC conditions are reset by a cold start of the BPCUs. A cold start is a complete power-down followed by power-up.

NOTE

When a TRU OC protection is active, the operation of SSRPCs and power transfers are inhibited until the protection is no longer active.

Copyright © Bombardier Inc.

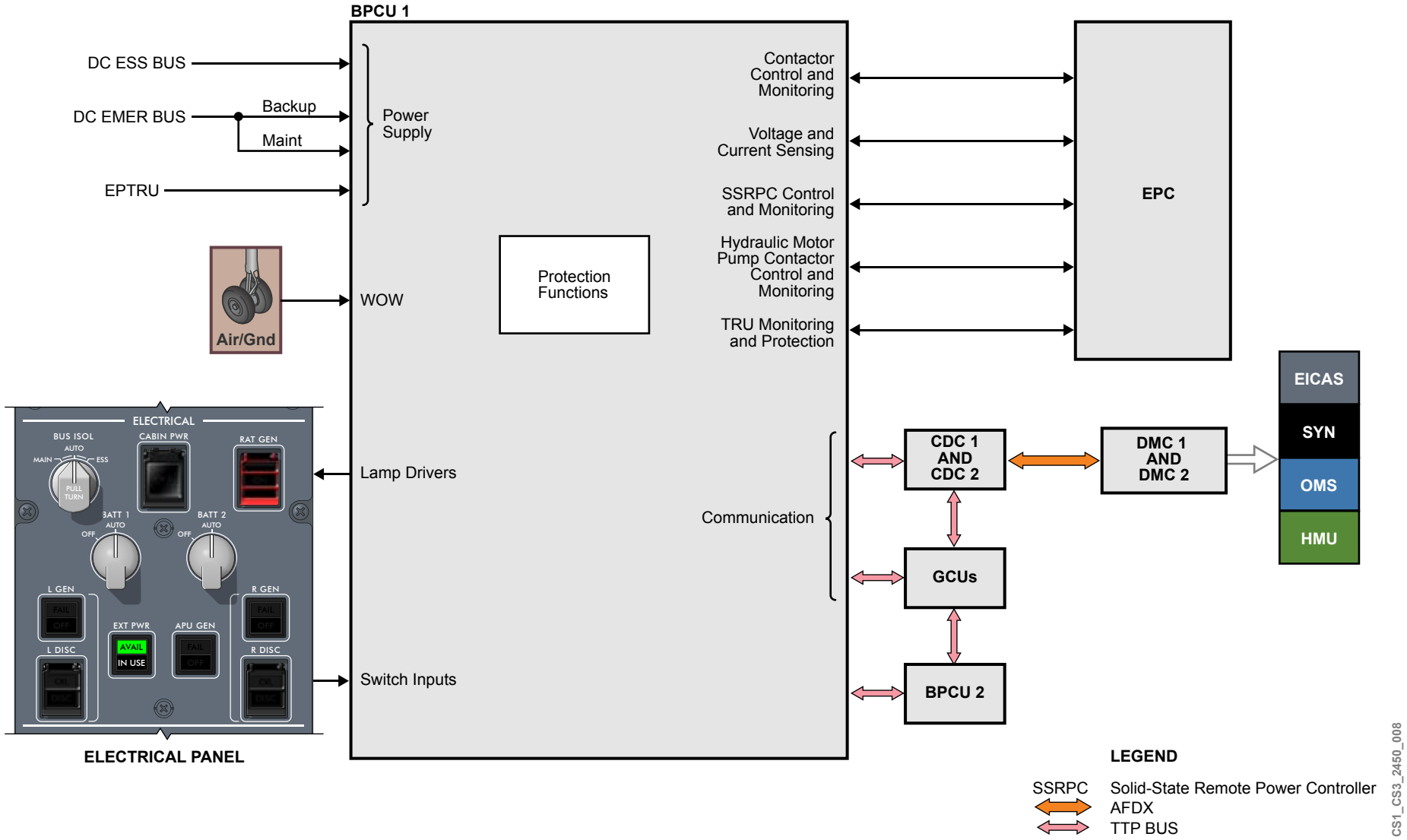

Figure 43: Bus Power Control Units Block Diagram

EMERGENCY POWER CONTROL

The emergency power control (EMPC) receives 28 VDC from DC ESS BUS 2 and DC ESS BUS 3. The DC EMER BUS provides backup power to the EMPC in the event the voltage of the other sources falls below 18 VDC.

The EMPC controls the following contactors:

- Essential bus contactors 1 and 2 (EBC 1 and EBC 2)
- Essential tie contactors 3 and 4 (ETC 3 and ETC 4)
- TRU line contactor 3 (TLC 3)

The EMPC controls RAT line contactor (RLC) when the RAT is deployed.

The EMPC monitors the ELC, ALC, GLC 1 and GLC 2, EBC 1 and EBC 2, TLC 1 and TLC 3, ETC 3 and ETC 4, and the RLC status via their auxiliary contact inputs.

The EMPC controls the various contactors in EPC 3 in coordination with BPCU 1 and BPCU 2.

The EMPC monitors TRU 3 for current, temperature, and status. A TRU 3 OC condition is reset by a cold start of the EMPC or when the electrical emergency mode is activated.

The EMPC communicates with DMC 1 and DMC 2 over ARINC 429.

The RAT generator control (RGC) transmits ARINC 429 data through the EMPC.

Upon detection of a fault, the EMPC latches the fault until a reset operation is conducted.

Copyright © Bombardier Inc.

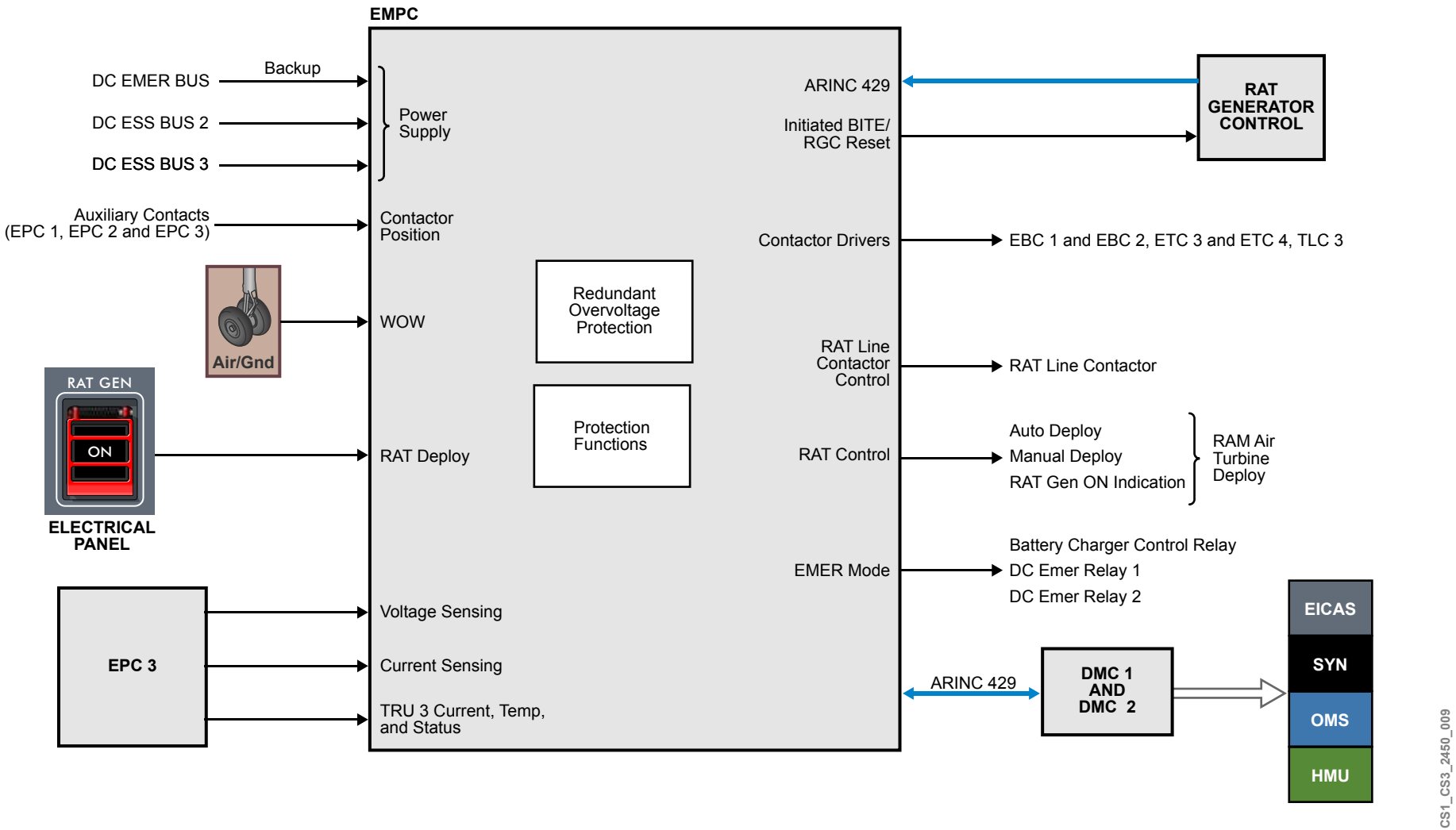

Figure 44: Emergency Power Control Block Diagram

CONTROLS AND INDICATIONS

ELECTRICAL PANEL AND SYNOPTIC PAGE

Primary power distribution indication is displayed on the ELEC synoptic page. The synoptic page is automatically configured to reflect the operational status of the aircraft.

Copyright © Bombardier Inc.

FLOW LINES	
Symbol	**Condition**
	Powered
	Not powered
	Invalid

BUS STATUS	
Symbol	**Condition**
DC ESS 3	Powered
AC ESS	Failed
DC EMER	Disconnected
AC BUS 1	Invalid

DECLUTTERED SYMBOLOGY LOGIC	
Symbol	**Condition**
	Interconnect DC BUS 1 and DC BUS 2 flow lines displayed only when energized or control logic is invalid.
DC EMER	Displayed only in abnormal states.

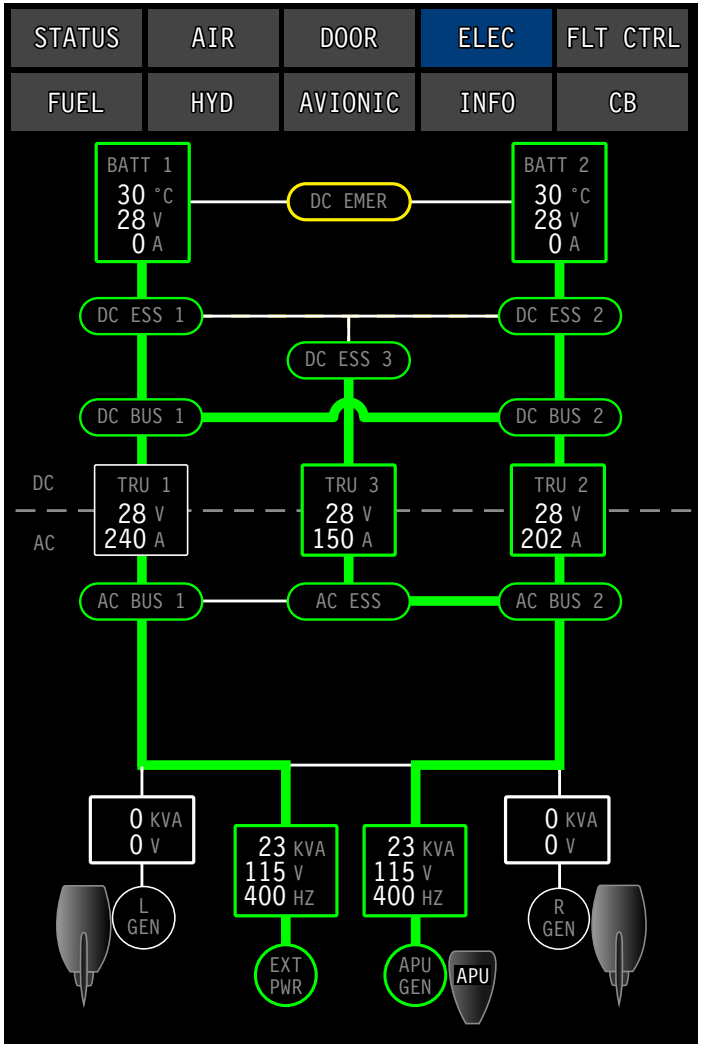

SYNOPTIC PAGE - ELECTRICAL

CS1_CS3_2450_010

Figure 45: Primary Power Distribution Controls and Indications

OPERATION

NORMAL OPERATION

Normal operation of the distribution of primary electrical power is illustrated in the following modes:

- Unpowered aircraft
- BATT 1 or BATT 2 power
- BATT 1 and BATT 2 power
- External AC power
- External AC with APU generator online
- APU generator online
- APU generator with left VFG online
- Left VFG online
- Left and right VFGs online
- External AC with L VFG online
- External AC with R VFG online

Unpowered Aircraft

When the aircraft is unpowered with both batteries connected, the battery direct buses are powered from their respective batteries. The emergency bus is powered from both battery direct buses through diodes.

NOTE

In this scenario, the ELECTRICAL synoptic page is not available, since the aircraft is unpowered, and there is no available power for the display units.

Copyright © Bombardier Inc.

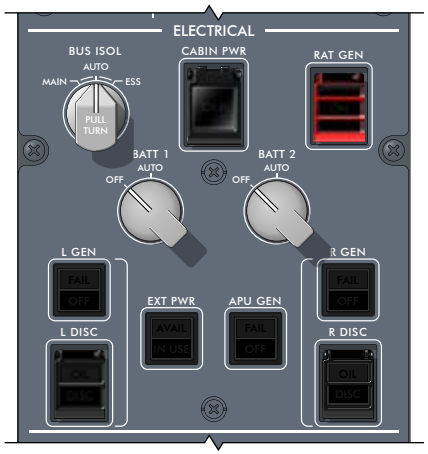

ELECTRICAL PANEL

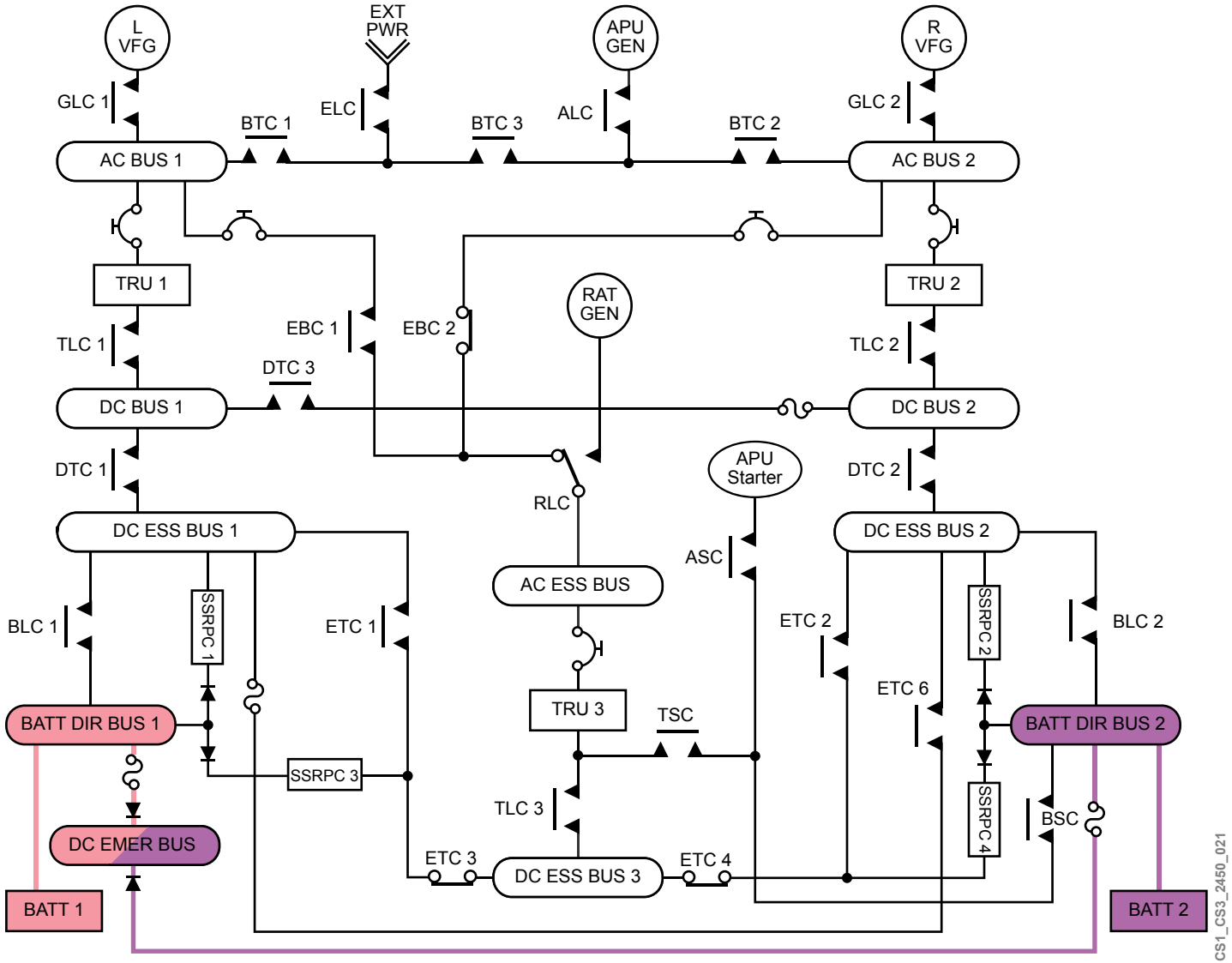

Figure 46: Unpowered Aircraft

BATT 1 or BATT 2 Power

When the BATT 1 switch is selected to AUTO, battery line contactor 1 (BLC 1) closes, allowing BATT DIR BUS 1 to supply DC ESS BUS 1.

Essential tie contactor (ETC) 1 and ETC 2 are energized by BPCU 1 and BPCU 2 respectively to connect all three DC ESS BUSES. BPCU 2 also energizes ETC 6 to directly parallel DC ESS BUS 1 and 2. This ensures that these two buses are paralleled in the event that the AC ESS BUS and DC ESS BUS 3 are isolated during the smoke isolation procedure (BUS ISOL switch selected to ESS).

Operation using BATT 2 switch is similar.

Copyright © Bombardier Inc.

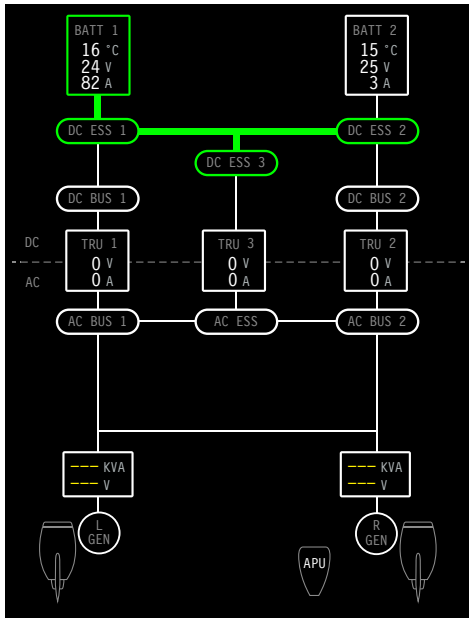

SYNOPTIC PAGE - ELECTRICAL

ELECTRICAL PANEL

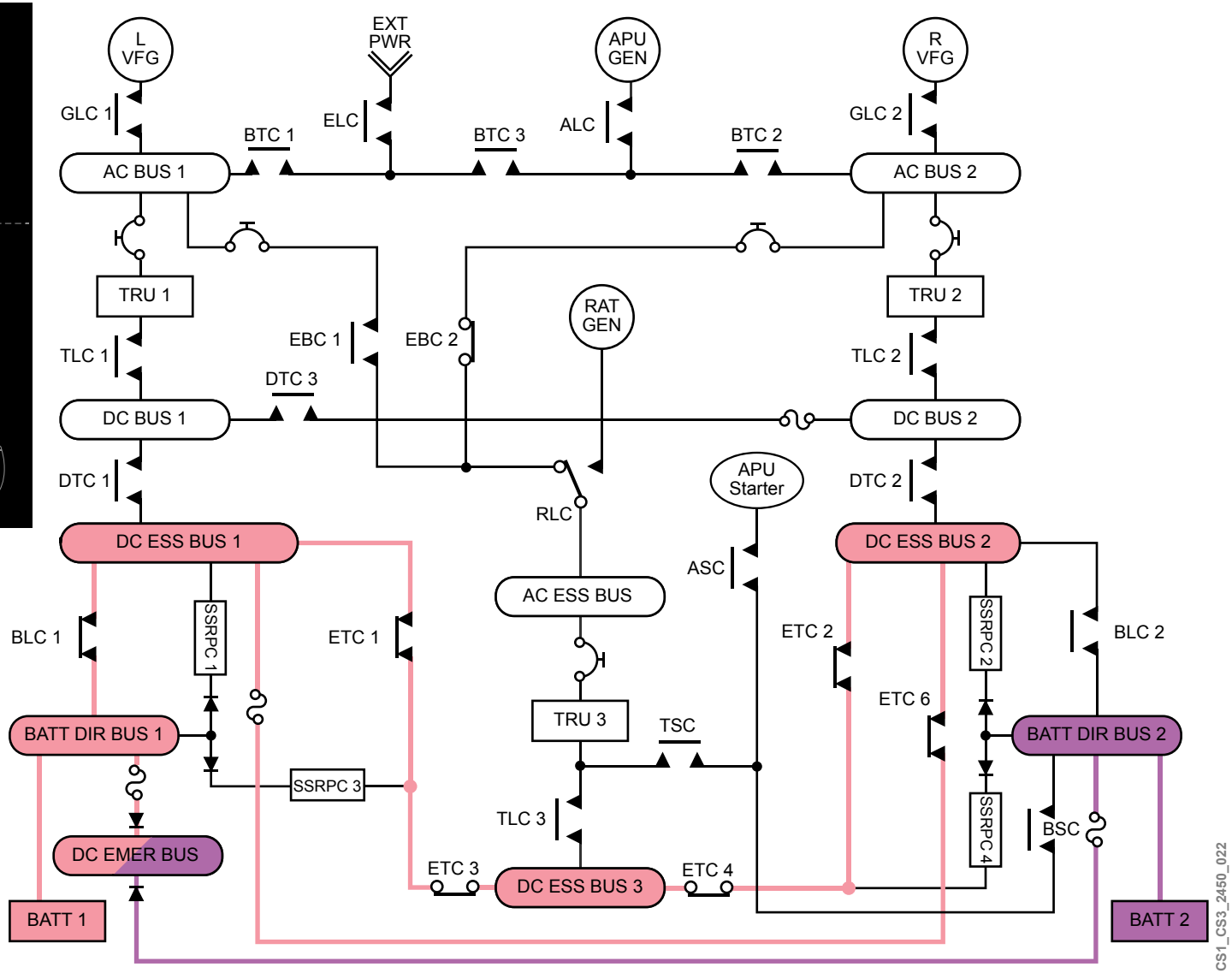

Figure 47: BATT 1 Switch Selected to AUTO

BATT 1 and BATT 2 Power

When both BATT 1 and BATT 2 switches are selected to AUTO, all three DC essential buses are powered, paralleled, and supplied from both batteries.

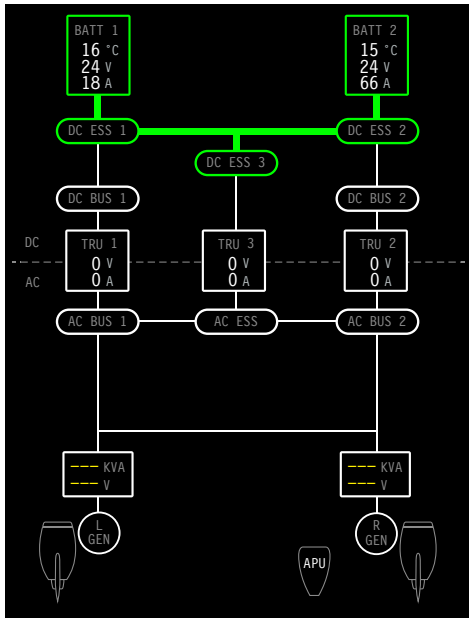

SYNOPTIC PAGE - ELECTRICAL

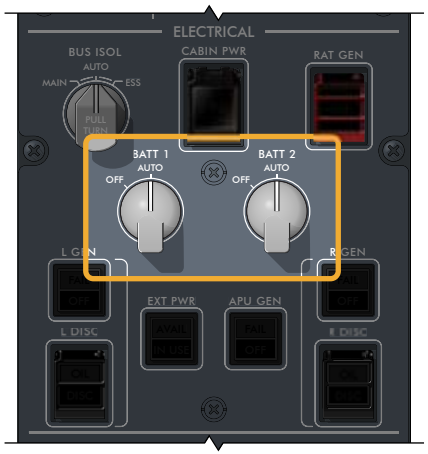

ELECTRICAL PANEL

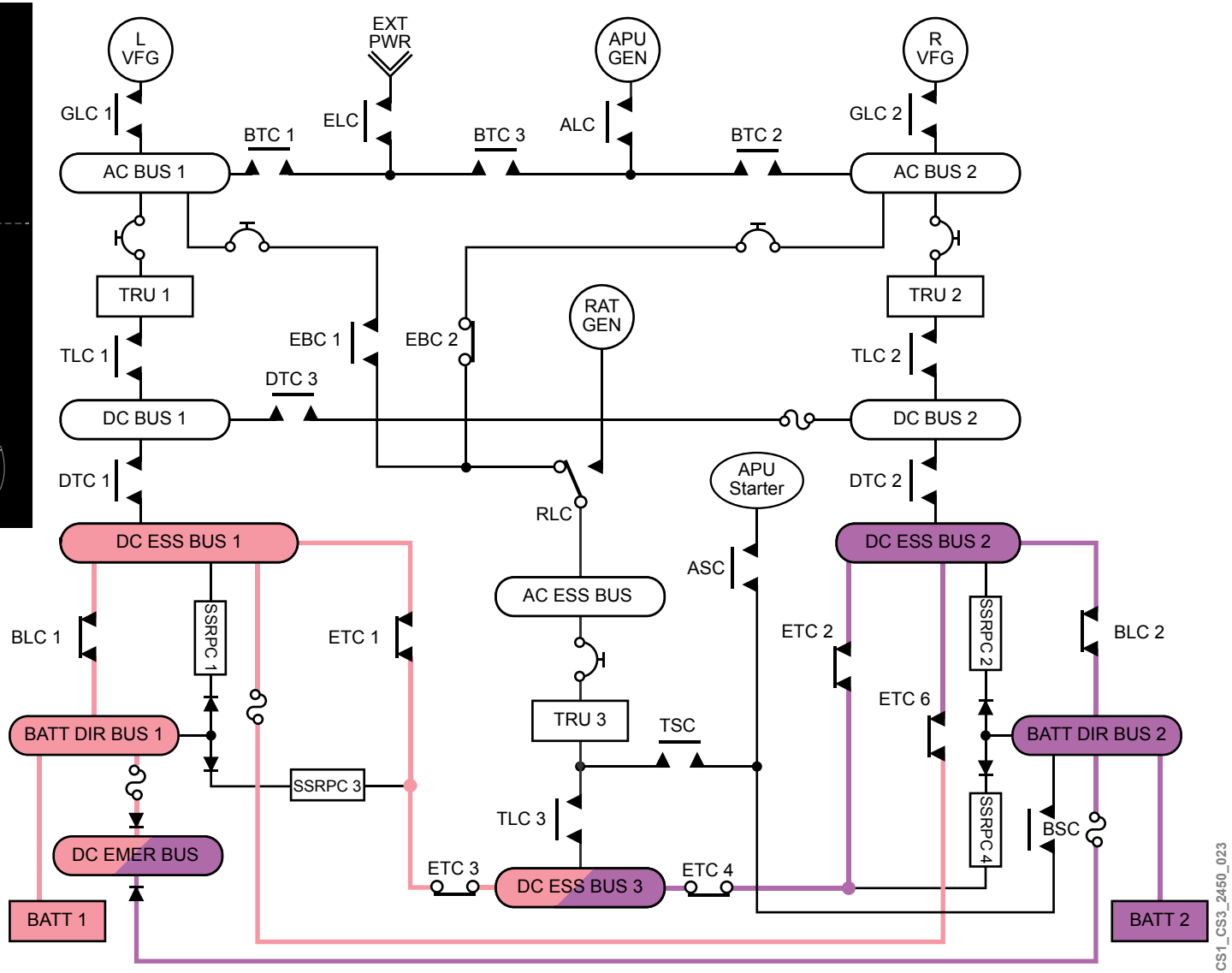

Figure 48: BATT 1 and BATT 2 Switches Selected to AUTO

External Power

When external power is connected to the aircraft, both the EXT PWR PBA AVAIL lights on the ELECTRICAL panel and on the electrical/towing service panel illuminate.

When the EXT PWR PBA on the ELECTRICAL panel is pressed, the AVAIL lights extinguish and the corresponding IN USE light illuminates.

BPCU 1 energizes the external power line contactor (ELC) to connect external power to the aircraft. In addition, the BPCUs energize the contactors within their respective EPCs. The EMPC energizes TRU line contactor 3 (TLC 3).

With power available from each of the TRUs, the battery line contactors (BLCs) are de-energized. Both batteries now only supply their associated battery direct bus and the emergency bus.

The BPCUs de-energize ETC 1, ETC 2, and ETC 6 to isolate the three DC essential buses from each other.

External Power Operation

To operate the aircraft with external power:

1 Connect the ground power unit (GPU) to the external power receptacle.

2 On the electrical/towing service panel:

- Make sure the EXT PWR SERV AVAIL light illuminates.
- Make sure the CKPT PBA IN USE and EXT PWR IN USE lights are off.

3 On the ELECTRICAL panel:

- Make sure the EXT PWR PBA IN USE light is off and the EXT PWR AVAIL light illuminates.
- Make sure the BUS ISOL switch is selected to AUTO.
- Select BATT 1 switch and BATT 2 switch to AUTO.
- Press the EXT PWR PBA
- Make sure that the EXT PWR PBA IN USE light illuminates and the EXT PWR AVAIL light goes off.

NOTE

On the main instrument panel, display unit (DU) 1 and DU 2 turn on. The ELECTRICAL synoptic page can be selected for display.

Copyright © Bombardier Inc.

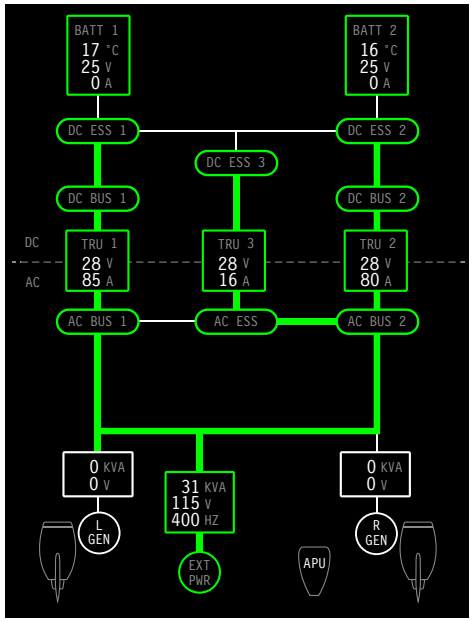

SYNOPTIC PAGE - ELECTRICAL

ELECTRICAL PANEL

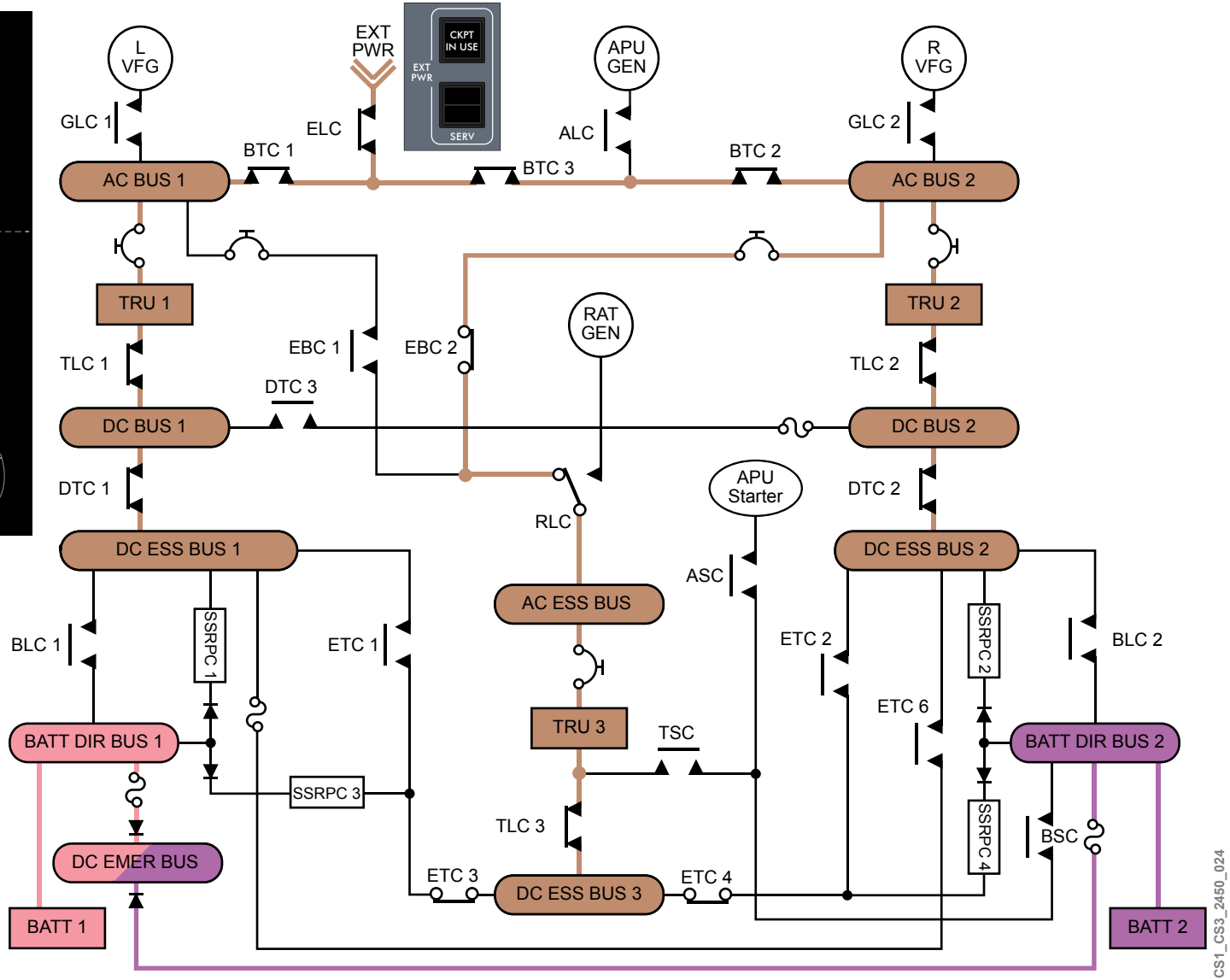

Figure 49: External Power Online

External Power with APU Generator Online

External power supplies the left channel and the APU generator supplies the right channel. BTC 3 is de-energized to isolate the left and right channels.

With the APU running, the APU generator comes online when the APU GEN PBA is selected, unless two AC sources are already online.

Copyright © Bombardier Inc.

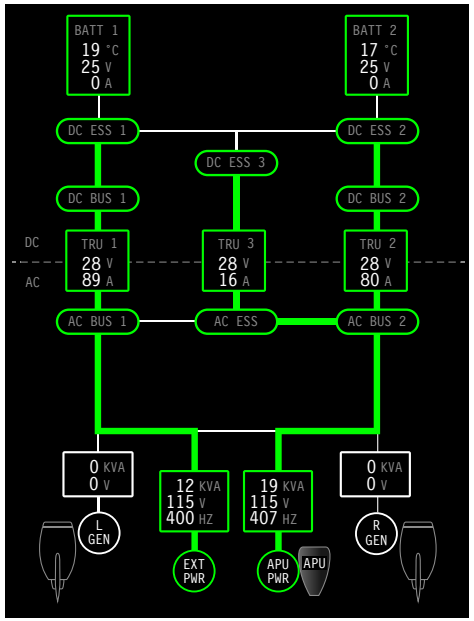

SYNOPTIC PAGE - ELECTRICAL

ELECTRICAL PANEL

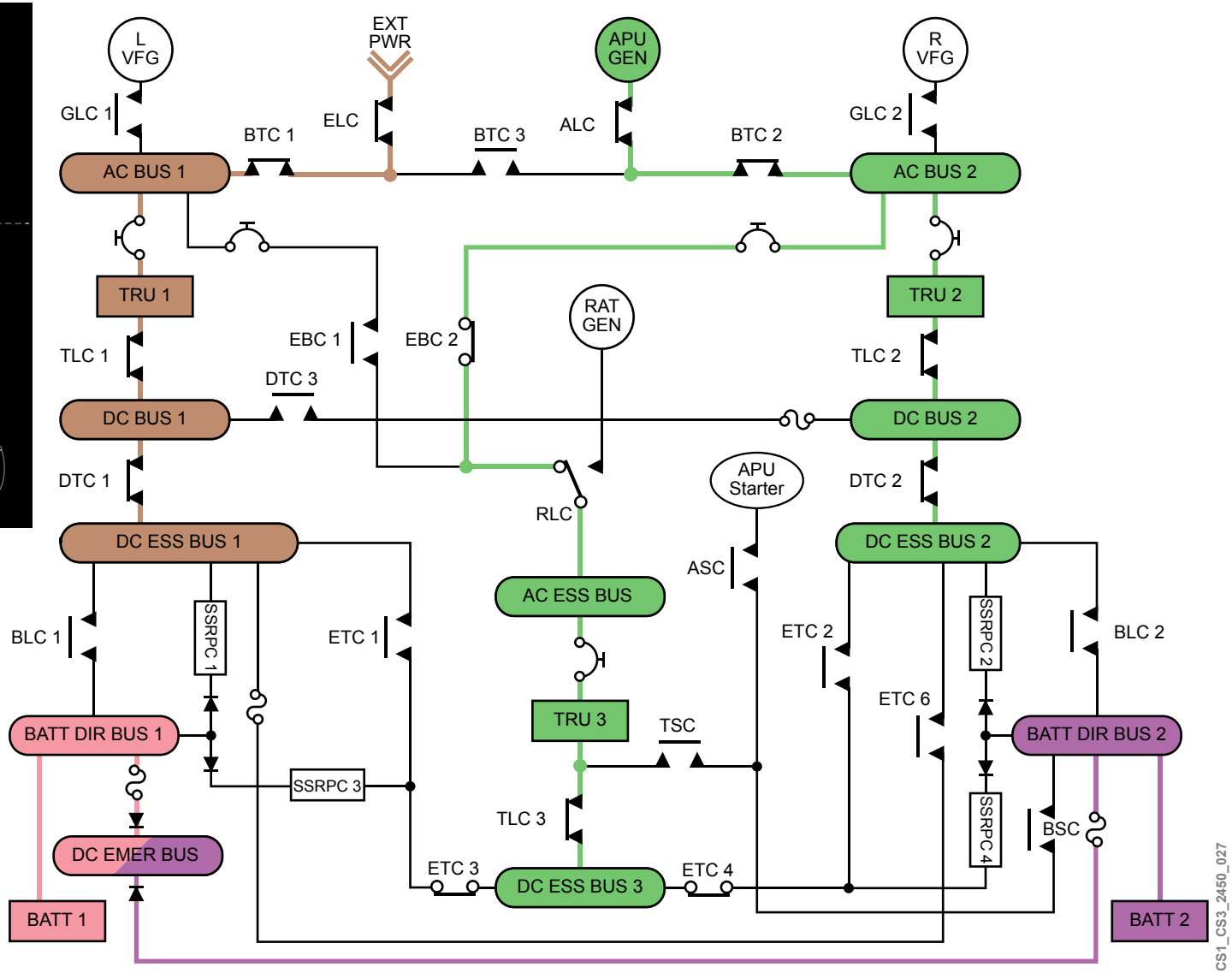

Figure 50: External Power with APU Generator Online

APU Generator Online

The BPCUs close BTC 1, BTC 2, and BTC 3 allowing the APU generator to supply the left and right channels.

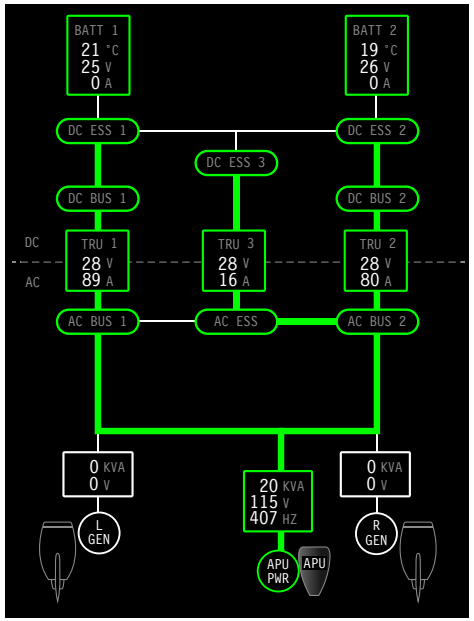

SYNOPTIC PAGE - ELECTRICAL

ELECTRICAL PANEL

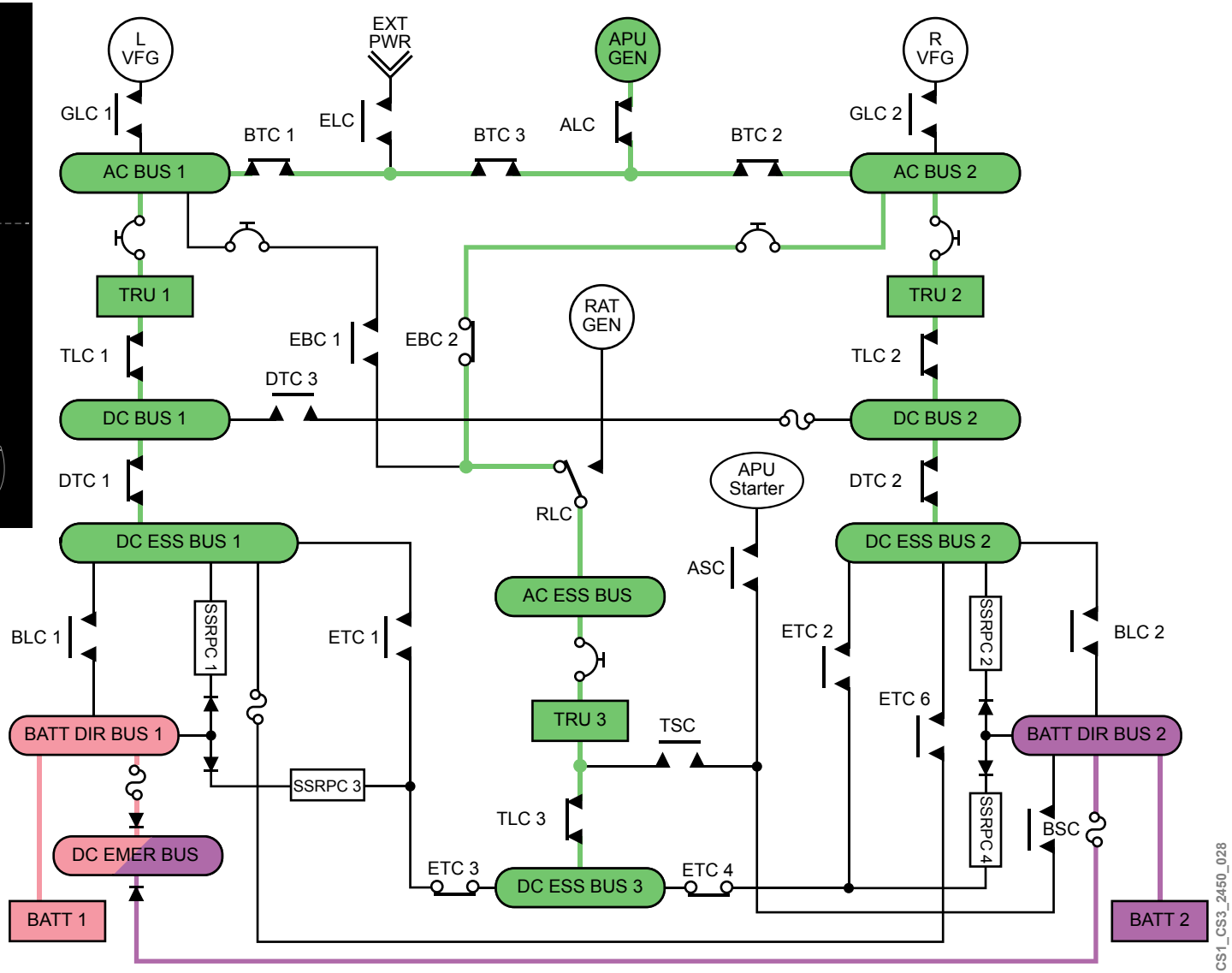

Figure 51: APU Generator Online

APU Generator and Left VFG Online

The APU generator is online and the left engine generator is brought online. The APU generator splits the channels with the other AC source.

With the left VFG online, BPCU 1 opens BTC 1 to isolate the left and right channels.

Copyright © Bombardier Inc.

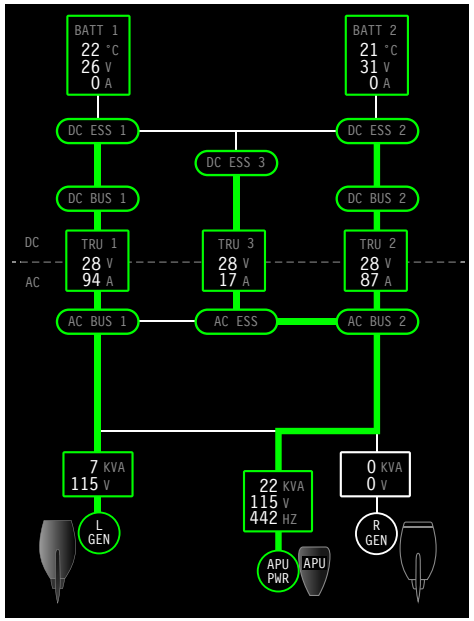

SYNOPTIC PAGE - ELECTRICAL

ELECTRICAL PANEL

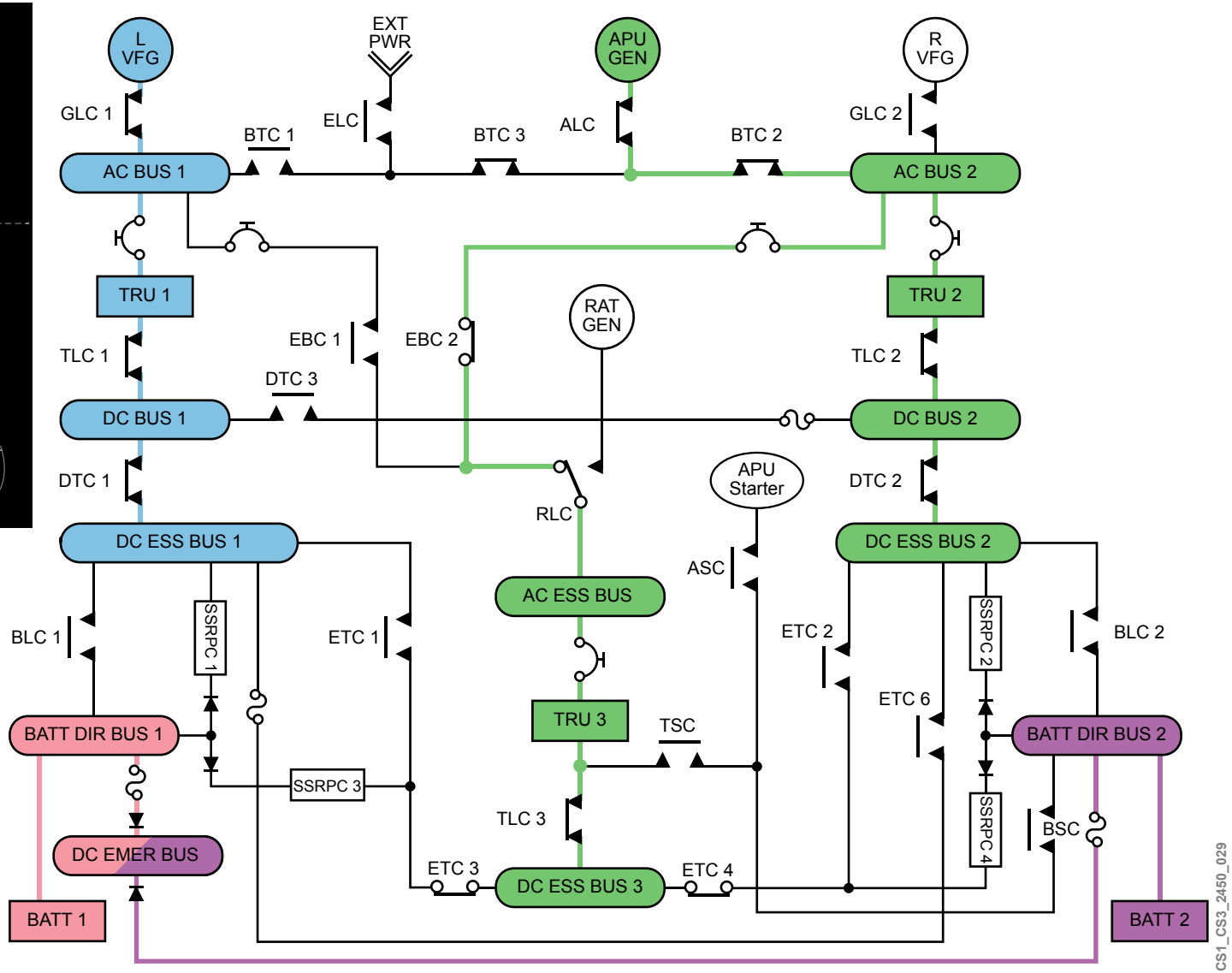

Figure 52: APU Generator and Left VFG Online

Left VFG Online

With only the left VFG online, the BPCUs close BTC 1, BTC 2, and BTC 3. The left VFG supplies power to all buses.

Copyright © Bombardier Inc.

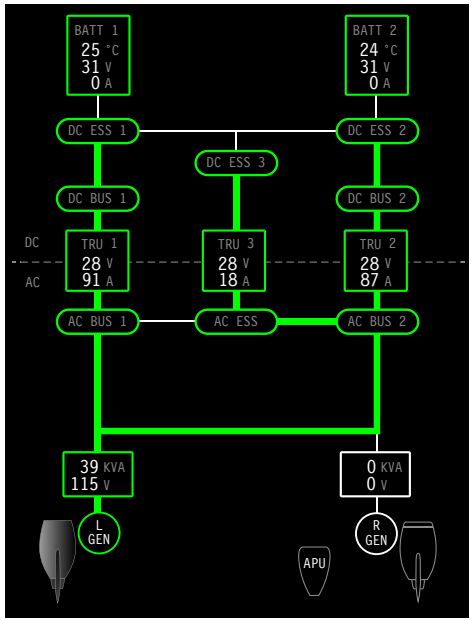

SYNOPTIC PAGE - ELECTRICAL

ELECTRICAL PANEL

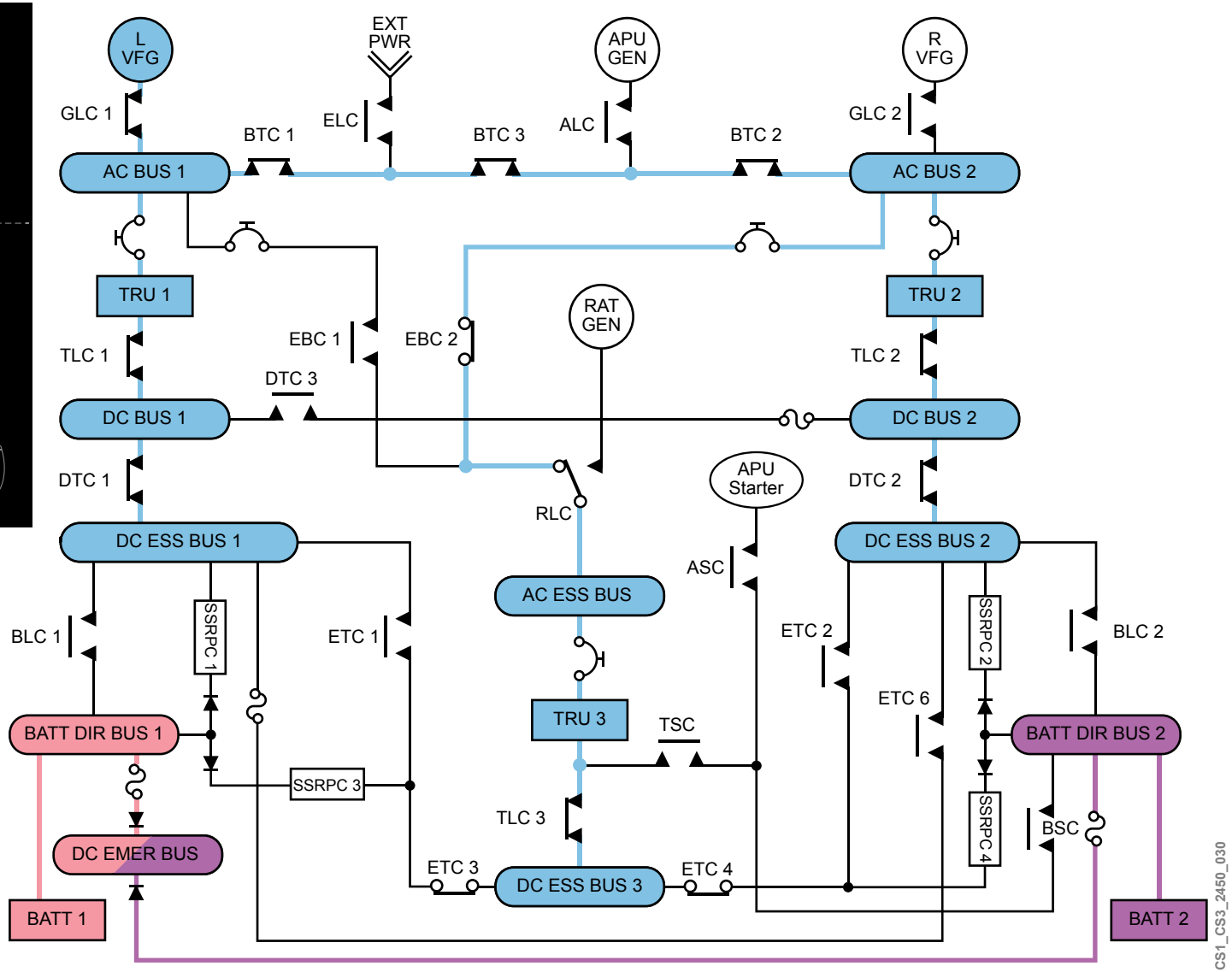

Figure 53: Left VFG Online

Left VFG and Right VFGs Online

The left VFG is online when the right VFG is online. The BPCUs open BTC 1 and BTC 2 to isolate the left and right channels.

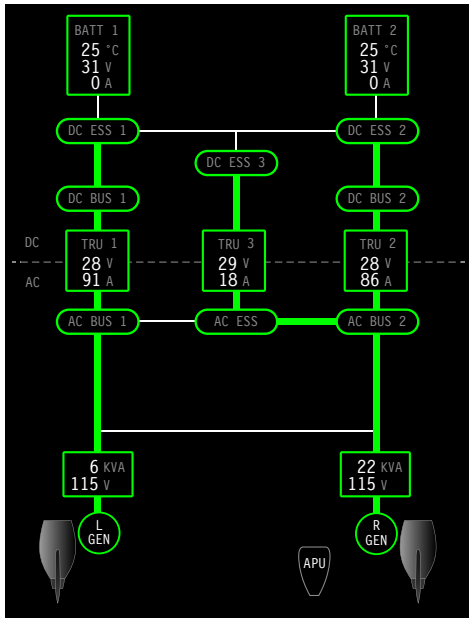

SYNOPTIC PAGE - ELECTRICAL

ELECTRICAL PANEL

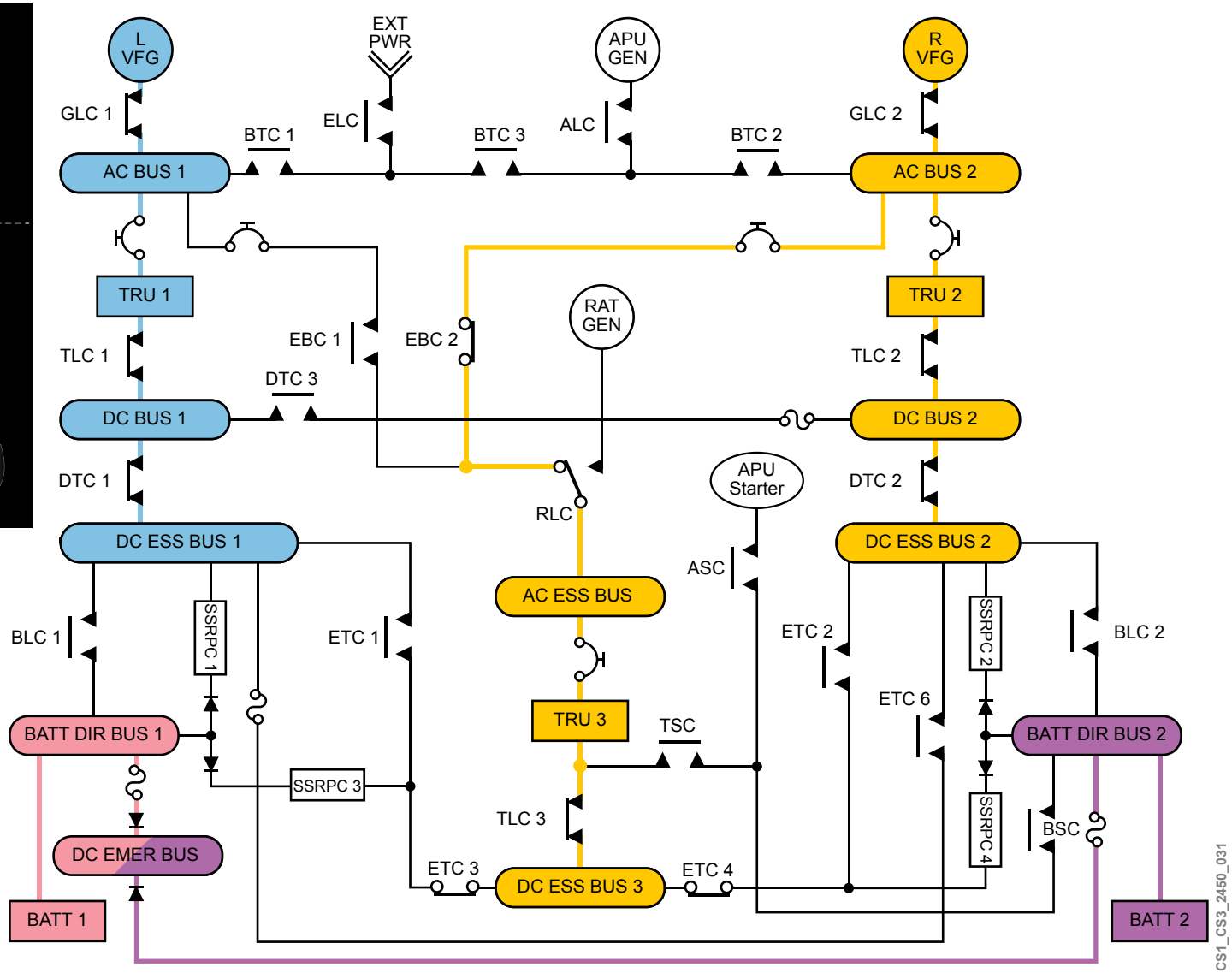

Figure 54: Left and Right VFGs Online

External Power with Left VFG Online

When the left engine is started, its VFG will automatically be turned on and brought online by the GCU energizing the generator line contactor. The left VFG will automatically supply the left channel (EPC 1). BPCU 1 de-energizes bus tie contactor 1 (BTC 1) to isolate the left channel from the right channel.

BPCU 2 energizes BTC 2 and BTC 3 to allow external power to supply the right channel.

Copyright © Bombardier Inc.

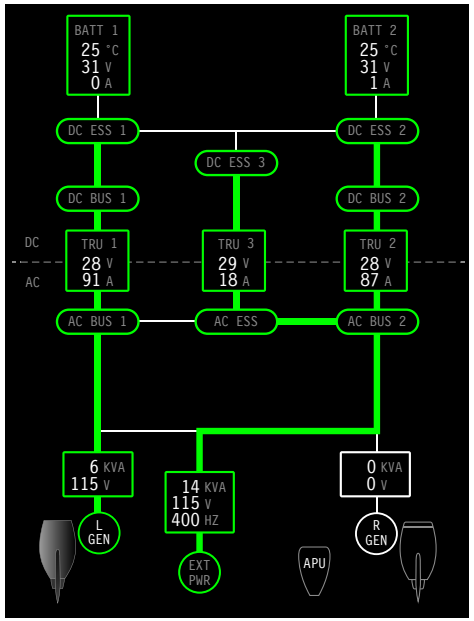

SYNOPTIC PAGE - ELECTRICAL

ELECTRICAL PANEL

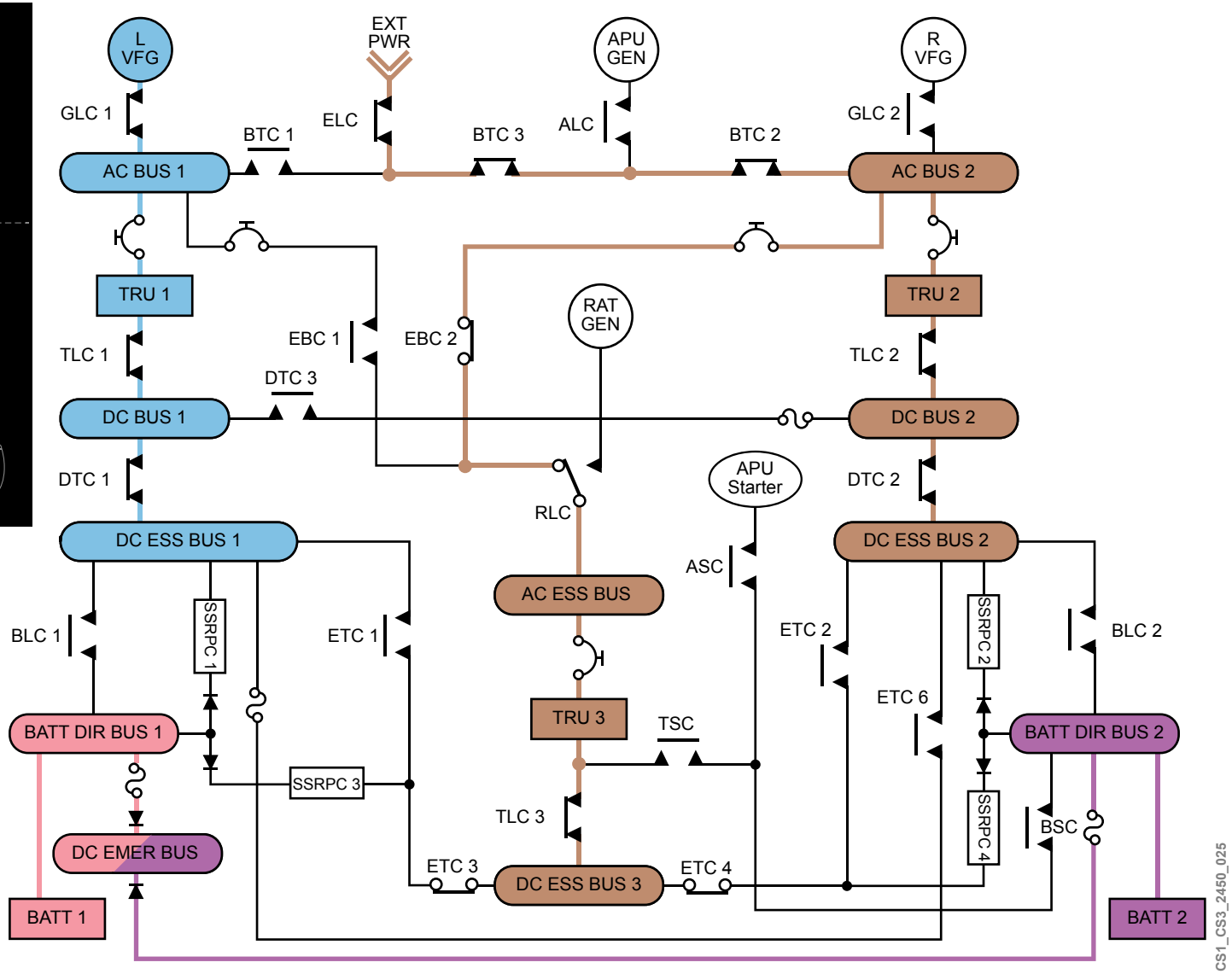

Figure 55: External Power with Left VFG Online

External Power with Right VFG Online

When the right engine is started (left engine off), the right VFG is automatically turned on and brought online by the right GCU.

BTC 2 is de-energized by BPCU 2 to isolate the right channel from the left, which will be supplied from external power.

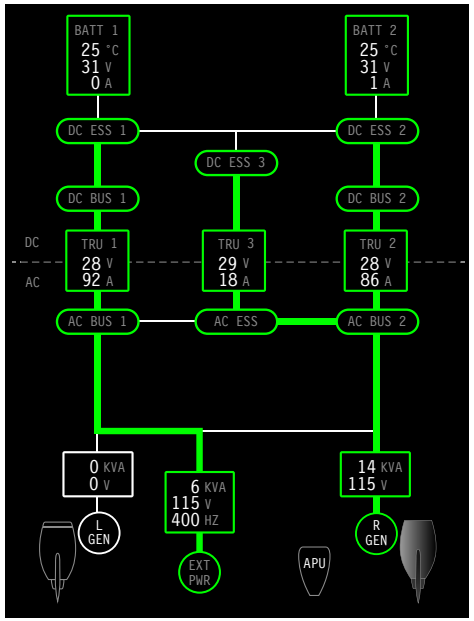

SYNOPTIC PAGE - ELECTRICAL

ELECTRICAL PANEL

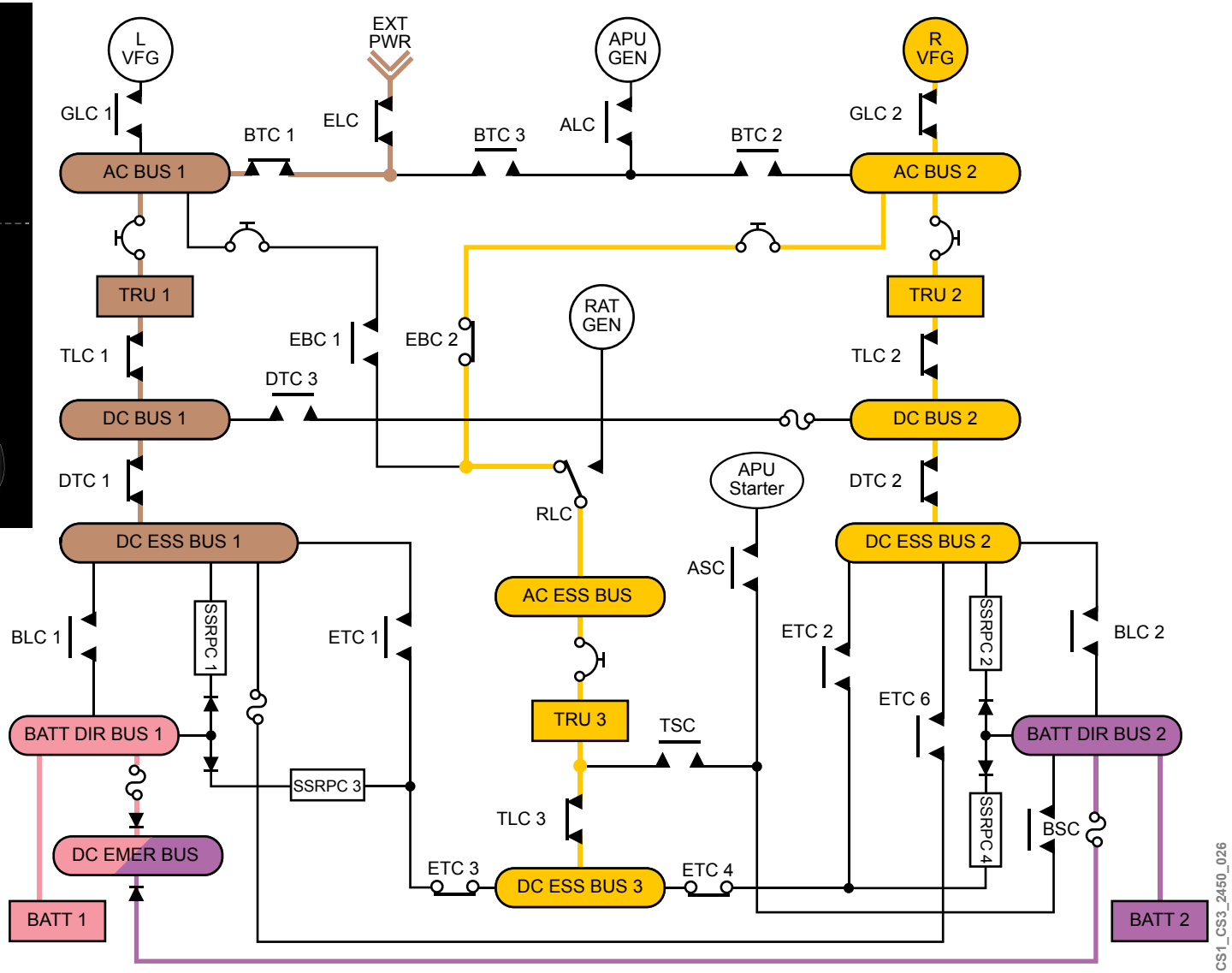

Figure 56: External Power with Right VFG Online

TRANSFORMER RECTIFIER UNIT FAILURE MODES

Operation of the distribution of primary electrical power is illustrated in the following TRU failure modes:

- TRU 1 failure
- TRU 3 failure
- TRU 1 and TRU 2 failure
- TRU 1 and TRU 3 failure

TRU 1 Failure

With both VFGs online, a failure of TRU 1 prevents TRU from supplying DC BUS 1. BPCU 1 energizes DTC 3 to allow DC BUS 2 to supply DC BUS 1.

To reduce the demand on the right VFG as a result of supplying DC BUS 1, the EMPC switches the AC ESS BUS from AC BUS 2 to AC BUS 1. This is done by energizing EBC 1 (normally open contactor) and EBC 2 (normally closed contactor).

To reduce the load on TRU 2, the DC ESS BUS 1 is powered from DC ESS BUS 3. This is done by closing ETC 1.

Copyright © Bombardier Inc.

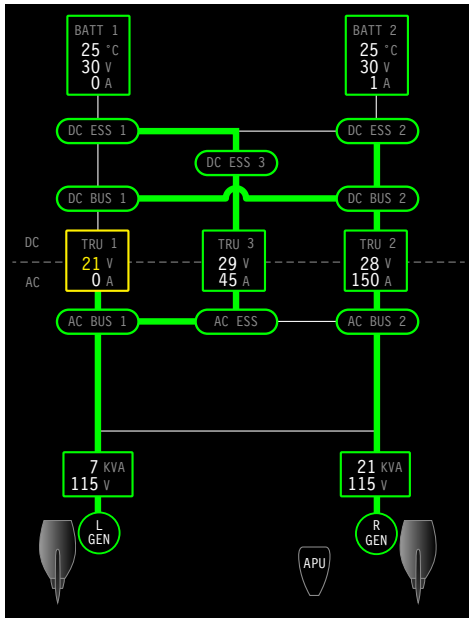

SYNOPTIC PAGE - ELECTRICAL

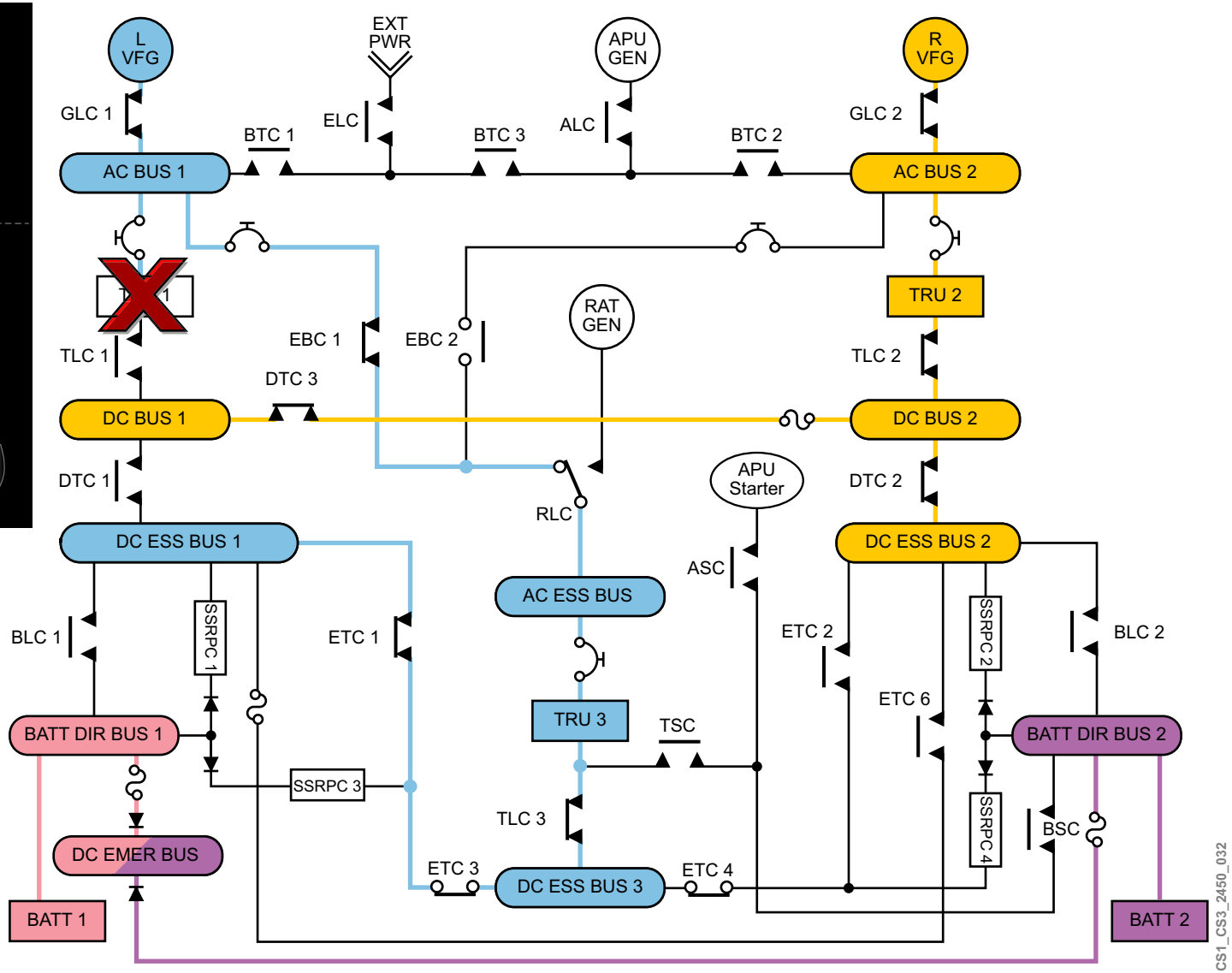

Figure 57: TRU 1 Failure

TRU 3 Failure

With both VFGs online, a failure of TRU 3 prevents DC ESS BUS 3 from being supplied by this TRU. In this scenario, ETC 2 is closed to allow DC ESS BUS 2 to supply DC ESS BUS 3.

Copyright © Bombardier Inc.

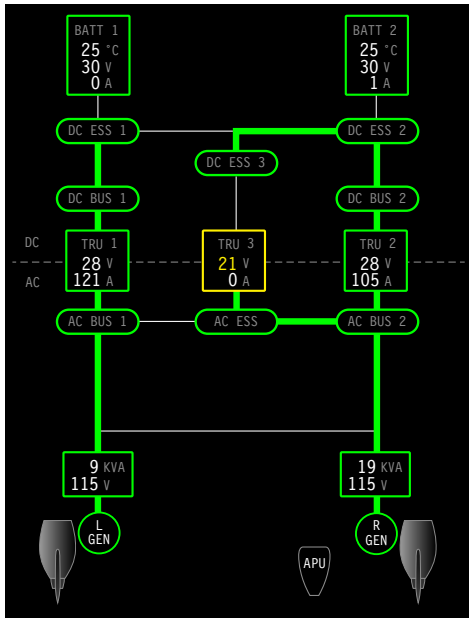

SYNOPTIC PAGE - ELECTRICAL

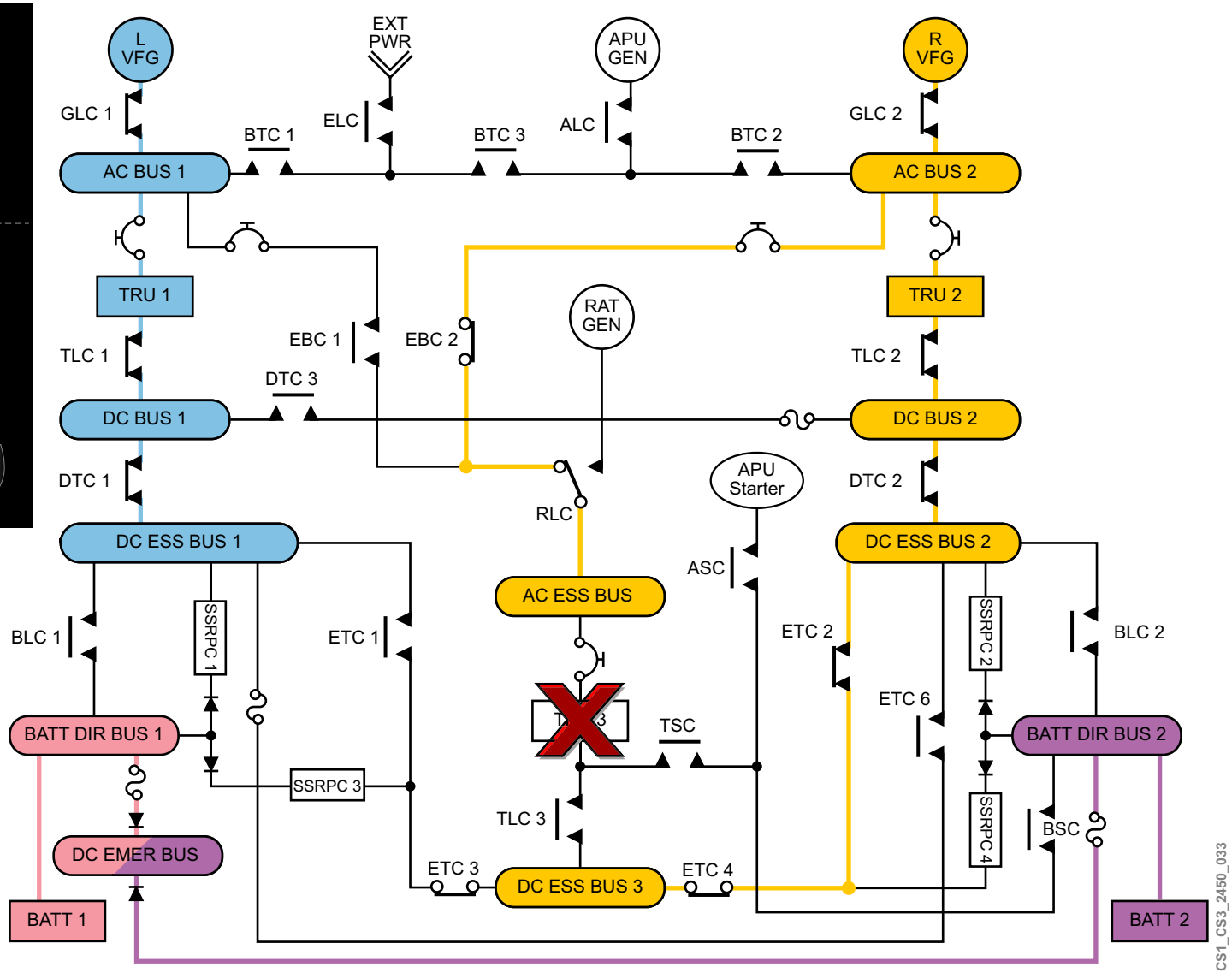

Figure 58: TRU 3 Failure

TRU 1 and TRU 2 Failures

Failure of TRU 1 and TRU 2 results in loss of power on both DC BUS 1 and DC BUS 2.

All DC ESS BUSES are paralleled and fed from TRU 3.

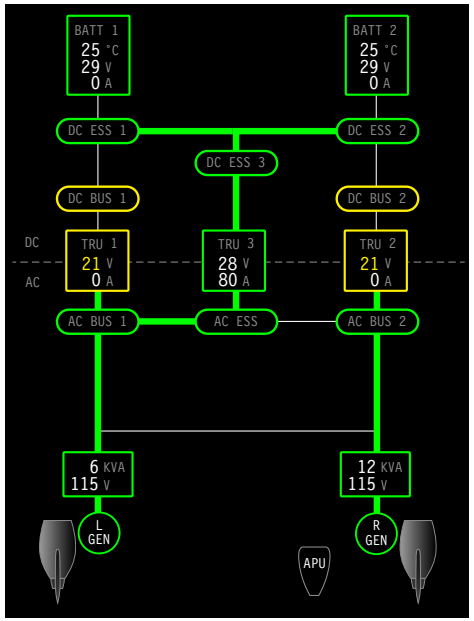

SYNOPTIC PAGE - ELECTRICAL

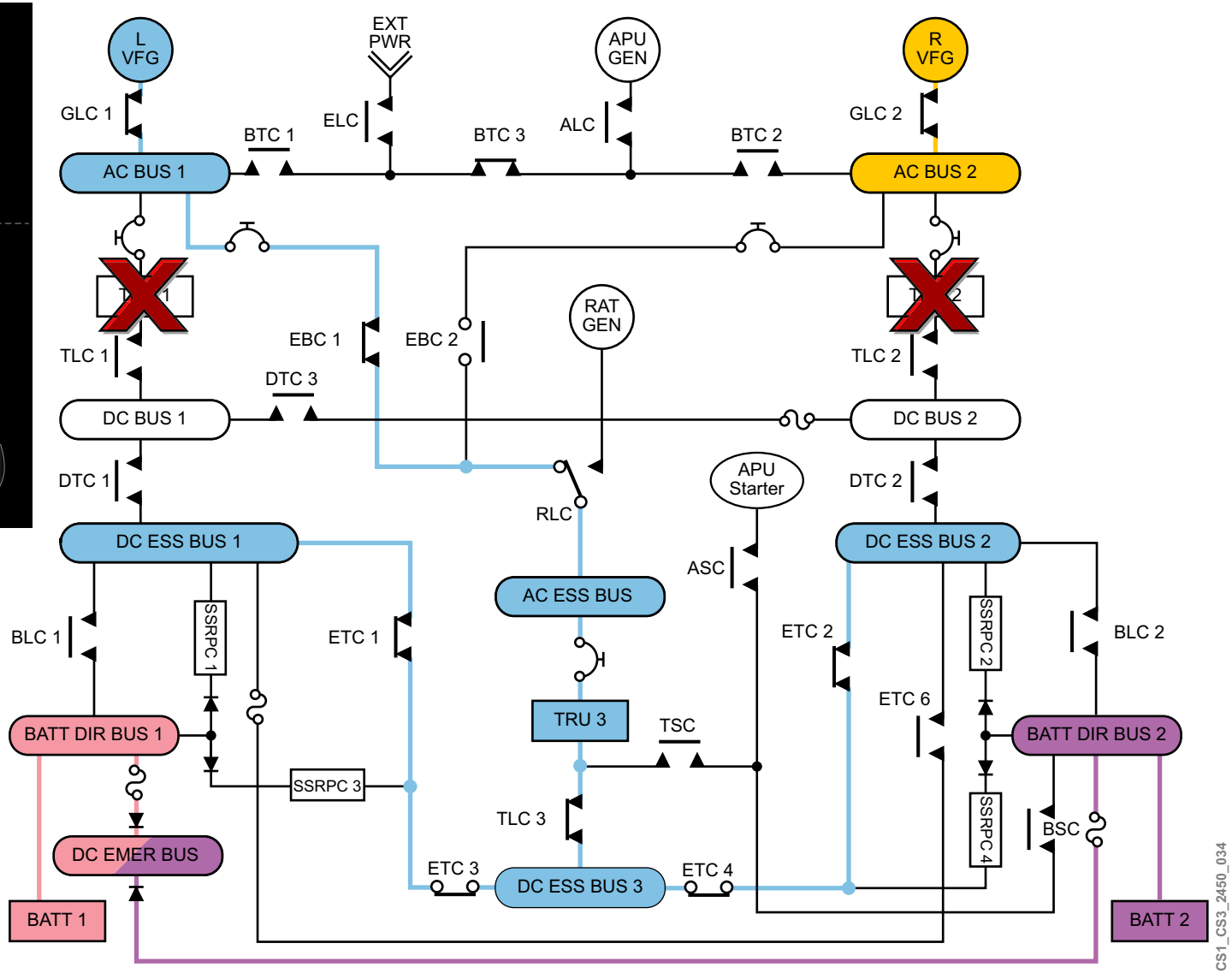

Figure 59: TRU 1 and TRU 2 Failure

TRU 1 and TRU 3 Failures

Failure of TRU 1 and TRU 3 results in TRU 2 as the remaining TRU. All DC ESS BUSES are paralleled through ETC 1, ETC 3, ETC 4, and ETC 2. In addition, DC ESS BUS 1 and DC ESS BUS 2 are paralleled through the closing of ETC 6.

The AC ESS BUS is powered from AC BUS 1 to avoid overloading AC BUS 2.

TRU 2 and TRU 3 Failure

Failure of TRU 1 and TRU 3 results in an identical configuration, with the exception that DC BUS 1 would be powered and DC BUS 2 would be unpowered. The AC ESS BUS is powered from AC BUS 2.

Copyright © Bombardier Inc.

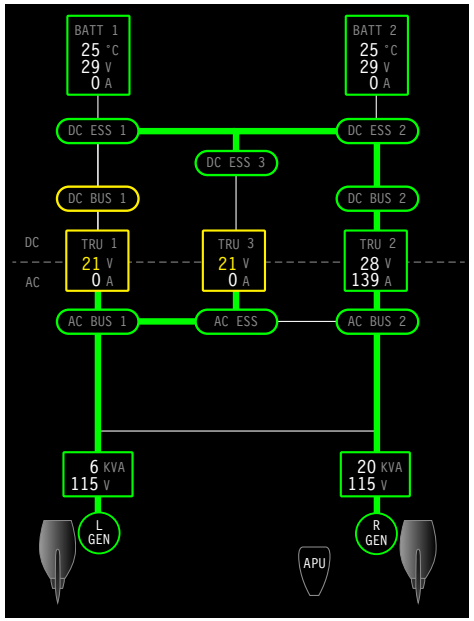

SYNOPTIC PAGE - ELECTRICAL

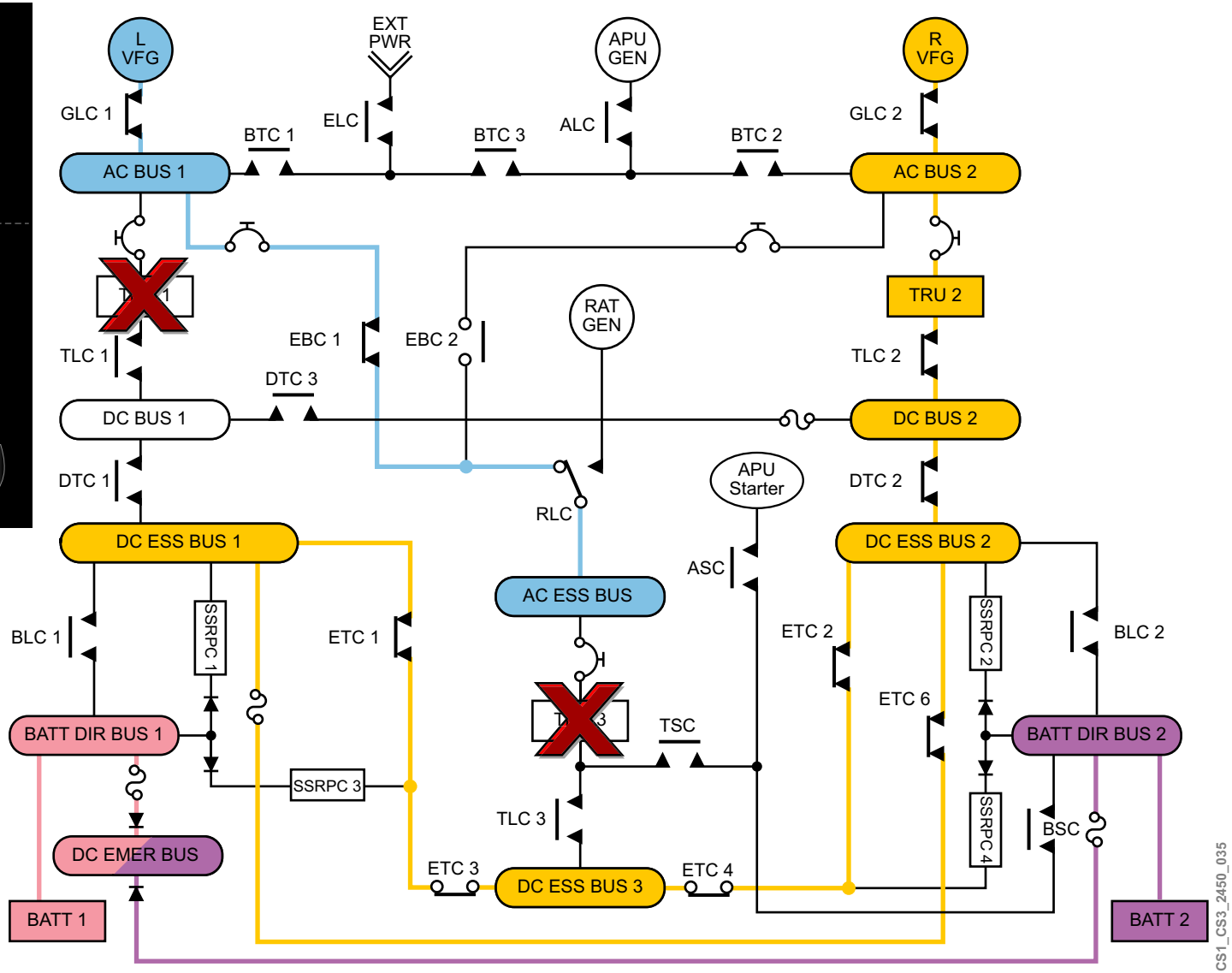

Figure 60: TRU 1 and TRU 3 Failure

GROUND SERVICE MODE

The ground service mode is selected using the SERV PBA on the ELECTRICAL/TOWING SERVICE PANEL. When the SERV PBA is pressed, BPCU 1 commands the ground service mode. BPCU 1 closes the ELC, BTC 1, BTC 3, and TLC 1.

Ten seconds after BPCU 1 commands ground service mode, BPCU 2 opens EBC 2, then closes BTC 2. This allows AC BUS 2 to be powered. CDC 2 turns on, but only controls power to battery charger 2 and battery heater 2. In addition, all loads connected to AC BUS 2 via a thermal circuit breaker are powered.

Operating the Aircraft in Ground Service Mode

To operate the aircraft in ground service mode:

1. Connect the ground power unit (GPU) to the external power receptacle.
2. On the ELECTRICAL/TOWING SERVICE panel, make sure that the EXT PWR SERV PBA AVAIL light illuminates.
3. On the ELECTRICAL panel, make sure that the BATT 1 and BATT 2 switches are set to the OFF position.
4. On the ELECTRICAL/TOWING SERVICE panel, press the EXT PWR SERV PBA. Make sure the EXT PWR SERV PBA IN USE light illuminates and the EXT PWR SERV PBA AVAIL light goes out.

Copyright © Bombardier Inc.

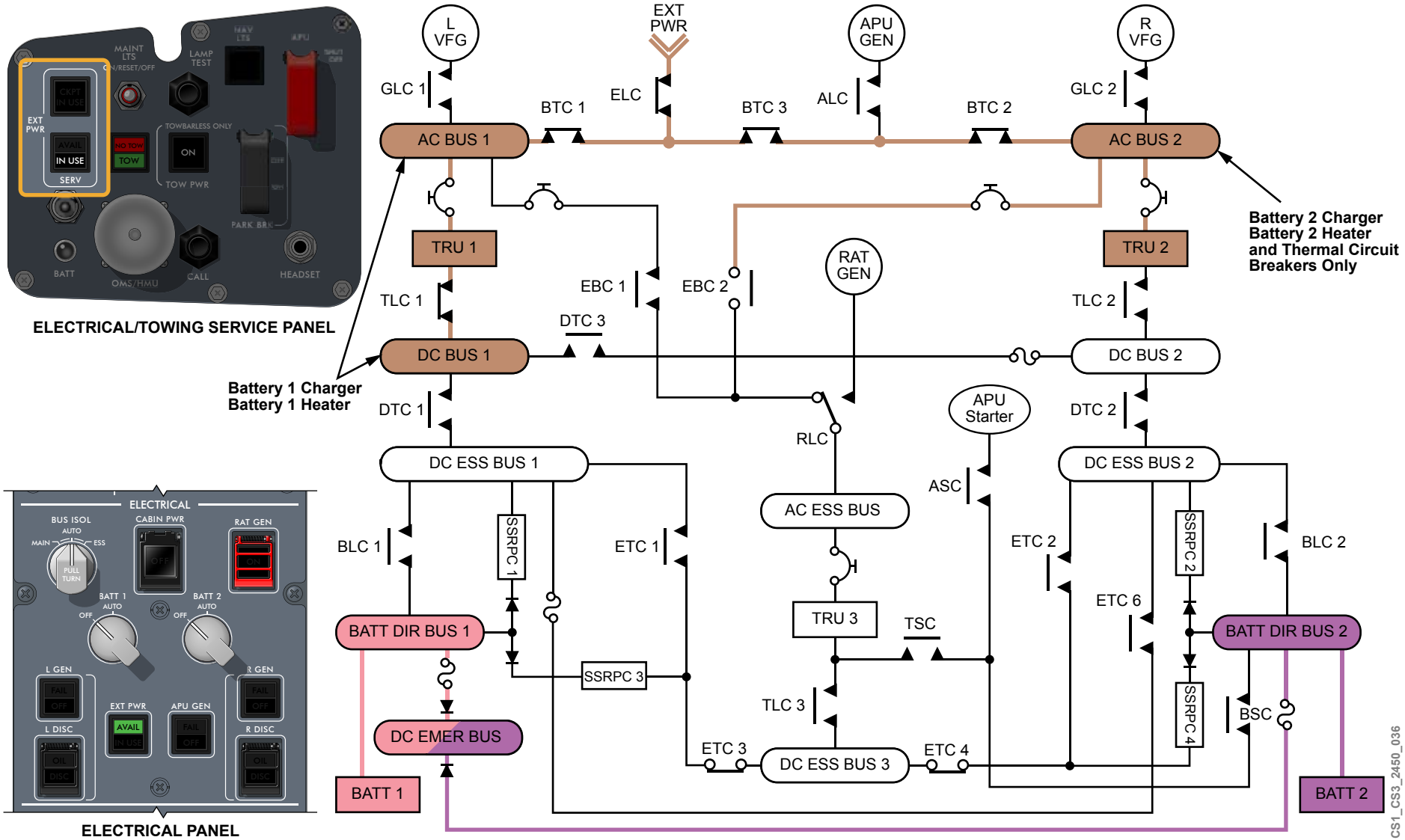

Figure 61: Ground Service Mode

SMOKE ISOLATION USING THE BUS ISOL SWITCH

Smoke isolation conditions and procedures require the flight crew to segregate systems, power sources, and buses to evaluate and extinguish possible electrical fire sources.

When the BUS ISOL switch on the ELECTRICAL panel is selected to MAIN, the left and right channels are isolated from each other. To remove power from a channel, with the BUS ISOL switch in the MAIN position, the associated GEN PBA on the ELECTRICAL panel is selected OFF. This de-energizes the generator line contactor, removing power to the associated AC BUS, TRU, and DC BUS. Since power is lost from the TRU, the corresponding battery line contactor closes, which powers the associated DC ESS BUS. If the DC ESS BUS must be isolated, the BATT switch must be selected OFF.

Smoke isolation procedures, related to EPC 3, require that the BUS ISOL switch on the ELECTRICAL panel is selected to ESS or MAIN to isolate EPC 3. Smoke isolation procedures require 28 VDC power from DC ESS BUS 2 or DC ESS BUS 3.

The circuitry for smoke isolation of EPC 3 is dictated by the position of the BUS ISOL switch within the cockpit. When the BUS ISOL switch is in MAIN, the logic opens ETC 3 and ETC 4. When the BUS ISOL switch is in ESS, ETC 4, ETC 3, EBC 2, and EBC 1 will be commanded to their open positions to isolate the EPC 3 AC ESS BUS and DC ESS BUS 3.

When the BUS ISOL switch is in AUTO, all contactors will be in their normal positions. Upon the loss of BUS ISOL switch ARINC 429 signal, the EMPC smoke isolation will remain in the last state unless an electrical emergency is detected.

The operation of the BUS ISOL switch for smoke isolation procedures is illustrated in the following modes:

- BUS ISOL switch in MAIN with both VFGs online
- BUS ISOL switch in MAIN with the left VFG online
- BUS ISOL switch in MAIN with the right VFG online
- BUS ISOL switch in ESS with both VFGs online

BUS ISOL Switch in MAIN with Both VFGs Online

With both VFGs online, when the BUS ISOL switch is selected to MAIN, the following contacts are opened and locked out:

- BTC 1, BTC 2, DTC 3, ETC 1, ETC 2, ETC 3, ETC 4, and ETC 6

Copyright © Bombardier Inc.

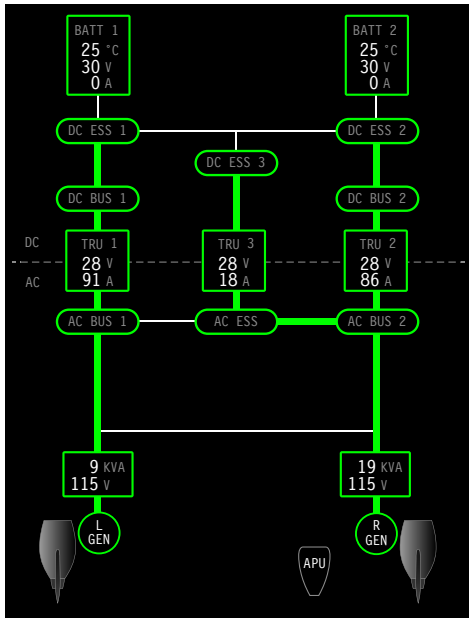

SYNOPTIC PAGE - ELECTRICAL

ELECTRICAL PANEL

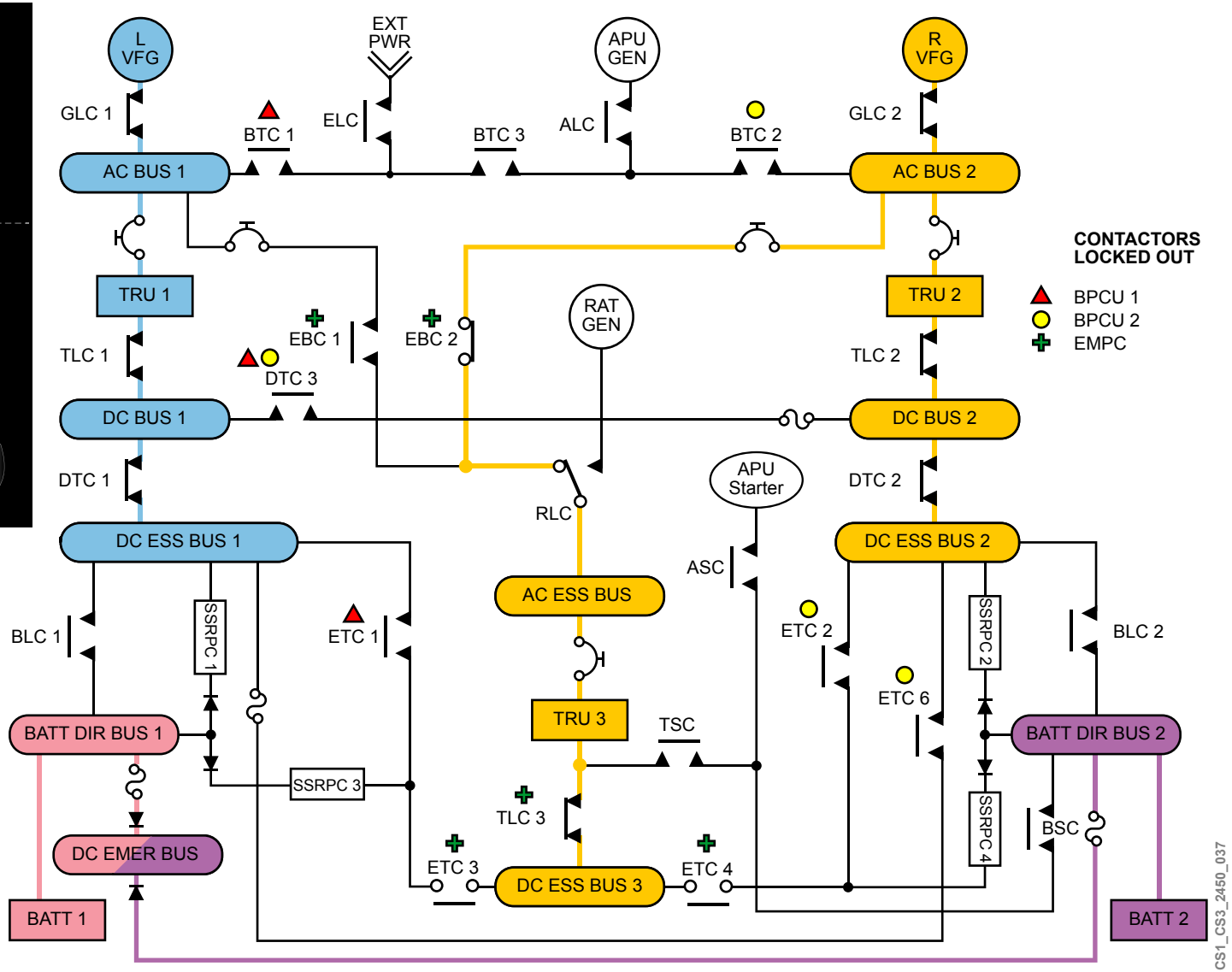

Figure 62: Main Transfer Inhibit with Both VFGs Online

BUS ISOL SWITCH IN MAIN WITH LEFT VFG ONLINE

With only the left VFG online, when the BUS ISOL switch is selected to MAIN, the following contacts are opened and locked out:

- BTC 1, DTC 3, ETC 1, ETC 2, ETC 3, ETC 4, and ETC 6

Copyright © Bombardier Inc.

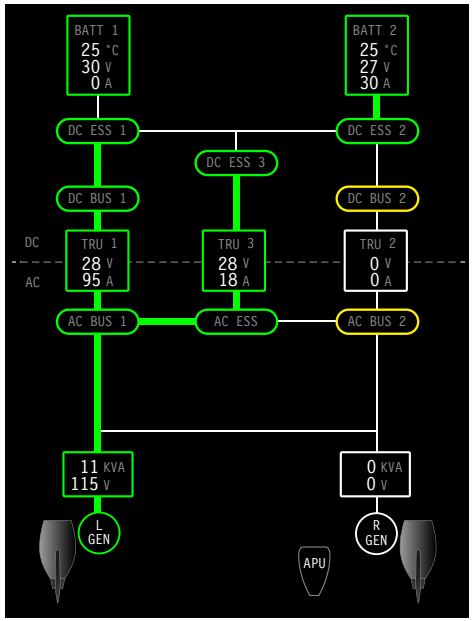

SYNOPTIC PAGE - ELECTRICAL

ELECTRICAL PANEL

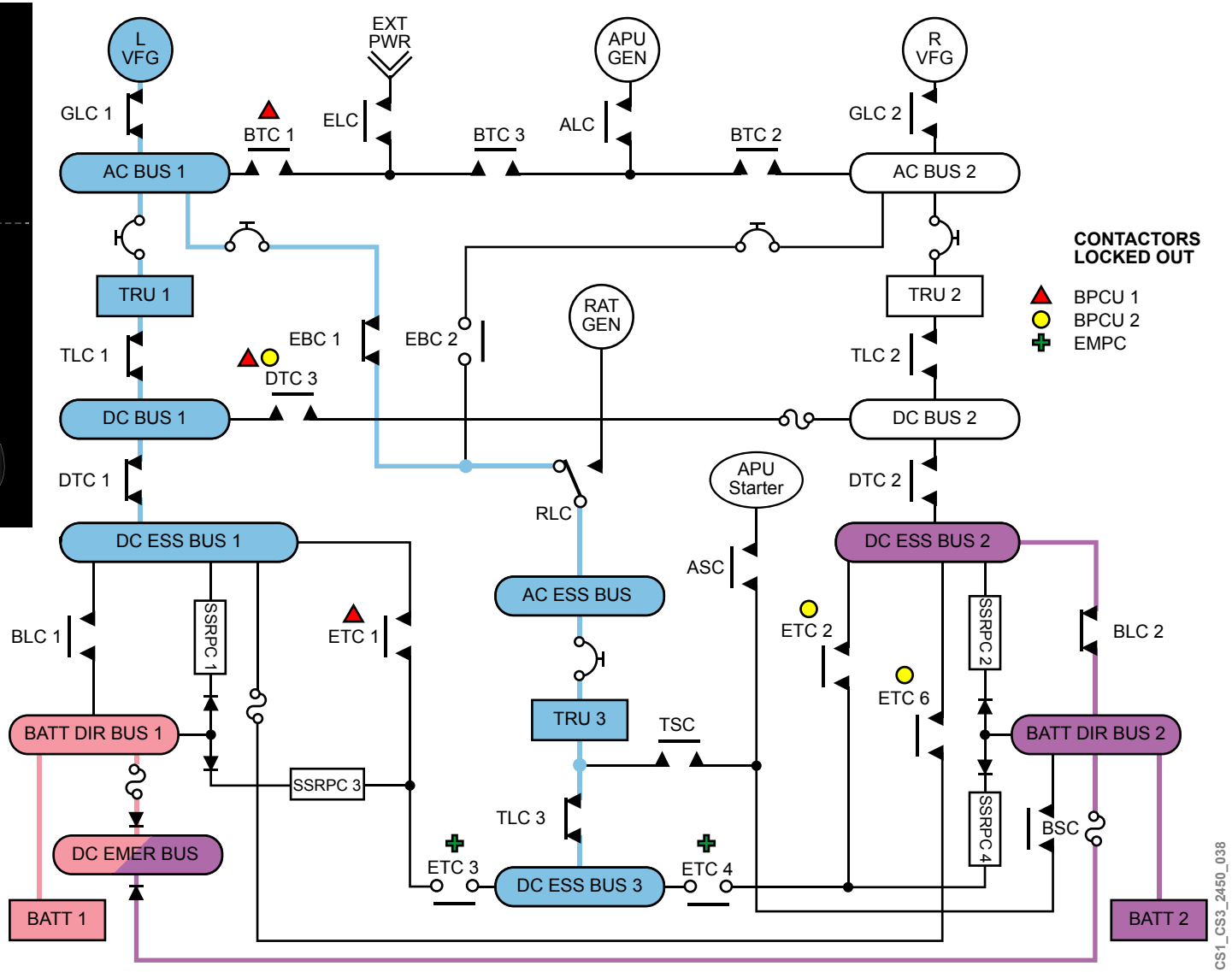

Figure 63: BUS ISOL Switch in MAIN with Left VFG Online

BUS ISOL SWITCH IN MAIN WITH RIGHT VFG ONLINE

With only the right VFG online, when the BUS ISOL switch is selected to MAIN, the following contacts are opened and locked out:

- BTC 2, DTC 3, ETC 1, ETC 2, ETC 3, ETC 4, and ETC 6

Copyright © Bombardier Inc.

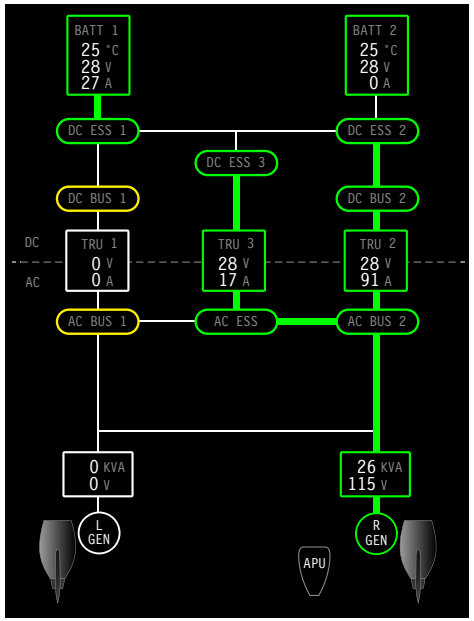

SYNOPTIC PAGE - ELECTRICAL

ELECTRICAL PANEL

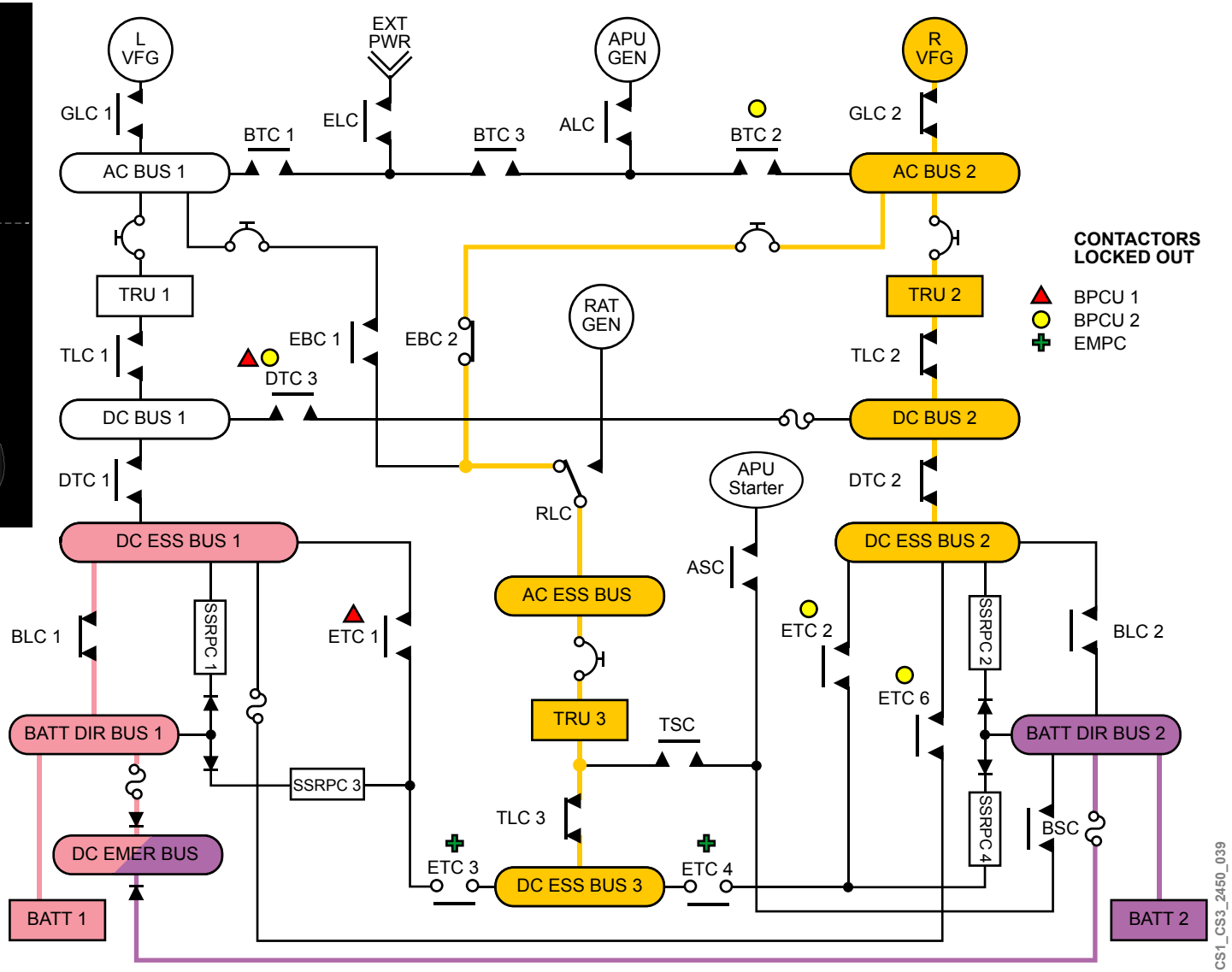

Figure 64: BUS ISOL Switch in Main with Right VFG Online

BUS ISOL SWITCH IN ESS WITH BOTH VFGS ONLINE

With both VFGs online, when the BUS ISOL switch is selected to ESS, the EMPC opens the following contactors:

- ETC 3, ETC 4, EBC 1, and EBC 2

Copyright © Bombardier Inc.

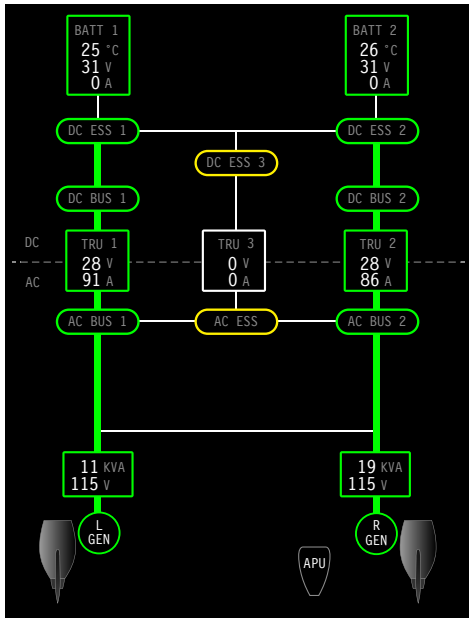

SYNOPTIC PAGE - ELECTRICAL

ELECTRICAL PANEL

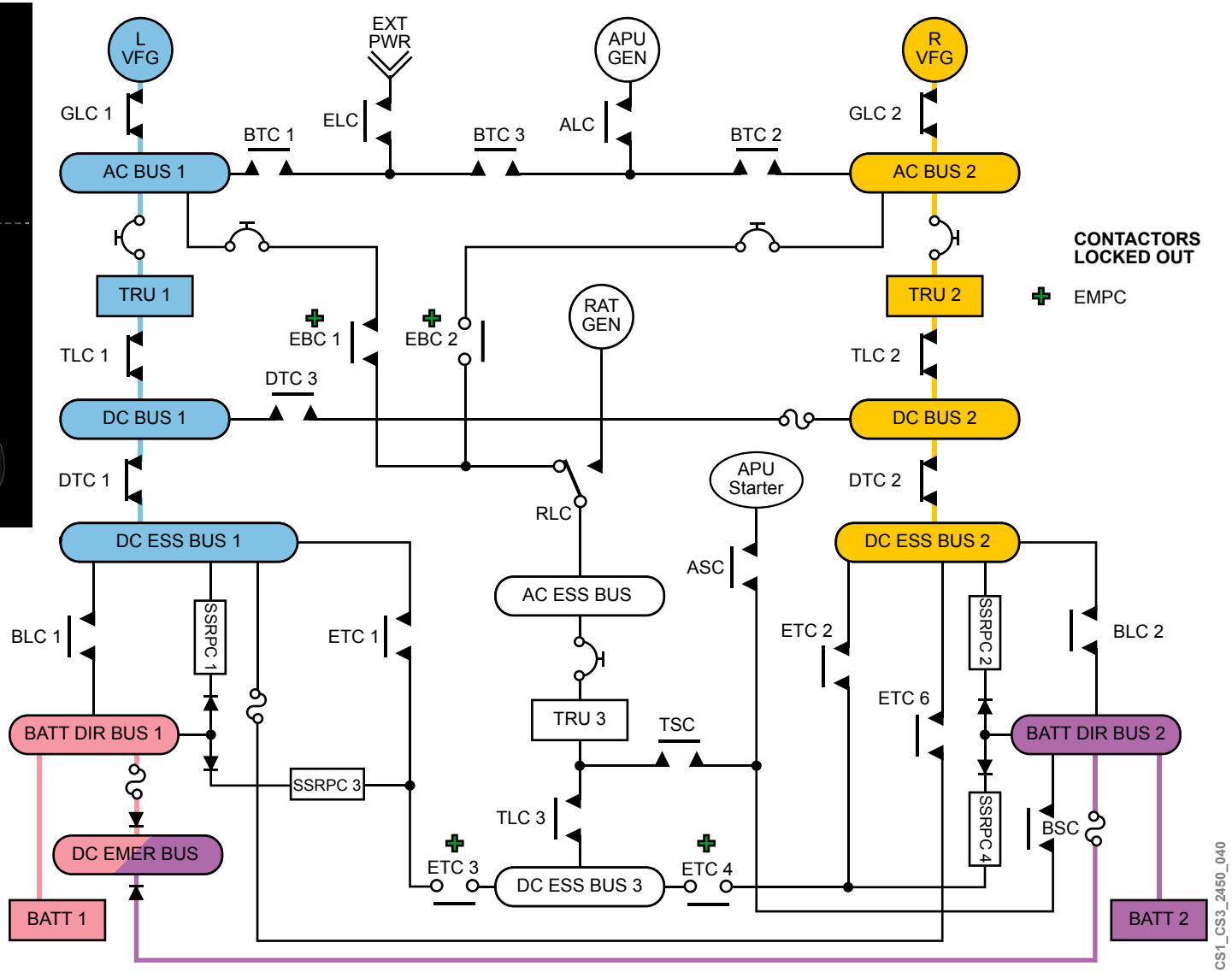

Figure 65: Essential Transfer Inhibit with Both VFGs Online

DETAILED DESCRIPTION

INTERRUPT-FREE DC ESSENTIAL BUS OPERATION

The DC primary distribution system includes four solid-state remote power controllers (SSRPCs). SSRPC 1 and SSRPC 3 are located in EPC 1, while SSRPC 2 and SSRPC 4 are located in EPC 2.

SSRPCs provide battery direct bus power to maintain the voltage on the DC ESS BUSES during source transfer in the brief period before the contactor can supply the bus. To maintain interrupt-free DC buses, the BPCUs command the SSRPCs on for 100 ms when the associated DC bus is sensed below a minimum voltage threshold.

The arrangement of SSRPC control and supply is as follows:

- BPCU 1 controls SSRPC 1 to route power from BATT DIR BUS 1 to DC ESS BUS 1, and SSRPC 3 routes power to DC ESS BUS 3
- BPCU 2 controls SSRPC 2 to route power from BATT DIR BUS 2 to DC ESS BUS 2 and SSRPC 4 to route power to DC ESS BUS 3

The BPCU commands the SSRPC to conduct power when the voltage on the associated DC ESS BUS falls below 22+/-1 VDC. The BPCUs will trigger the SSRPC output within 2.8 ms.

Whenever an SSRPC is commanded closed, the associated BLC is commanded closed for 10 seconds.

The SSRPCs have a continuous rating of 150 A DC, and report their status to the associated BPCU.

BPCU 1 inhibits SSRPC 1 and SSRPC 3 operation if TRU 1, TRU 3, or BATT 1 current exceeds 400 A. BPCU 2 inhibits SSRPC 2 and SSRPC 4 operation if TRU 2, TRU 3, or BATT 2 output current exceeds 400 A.

The BPCUs inhibit SSRPC operation when the respective battery switch is in the OFF position, except during the electrical maintenance mode, where BPCU 1 closes SSRPC 3.

Copyright © Bombardier Inc.

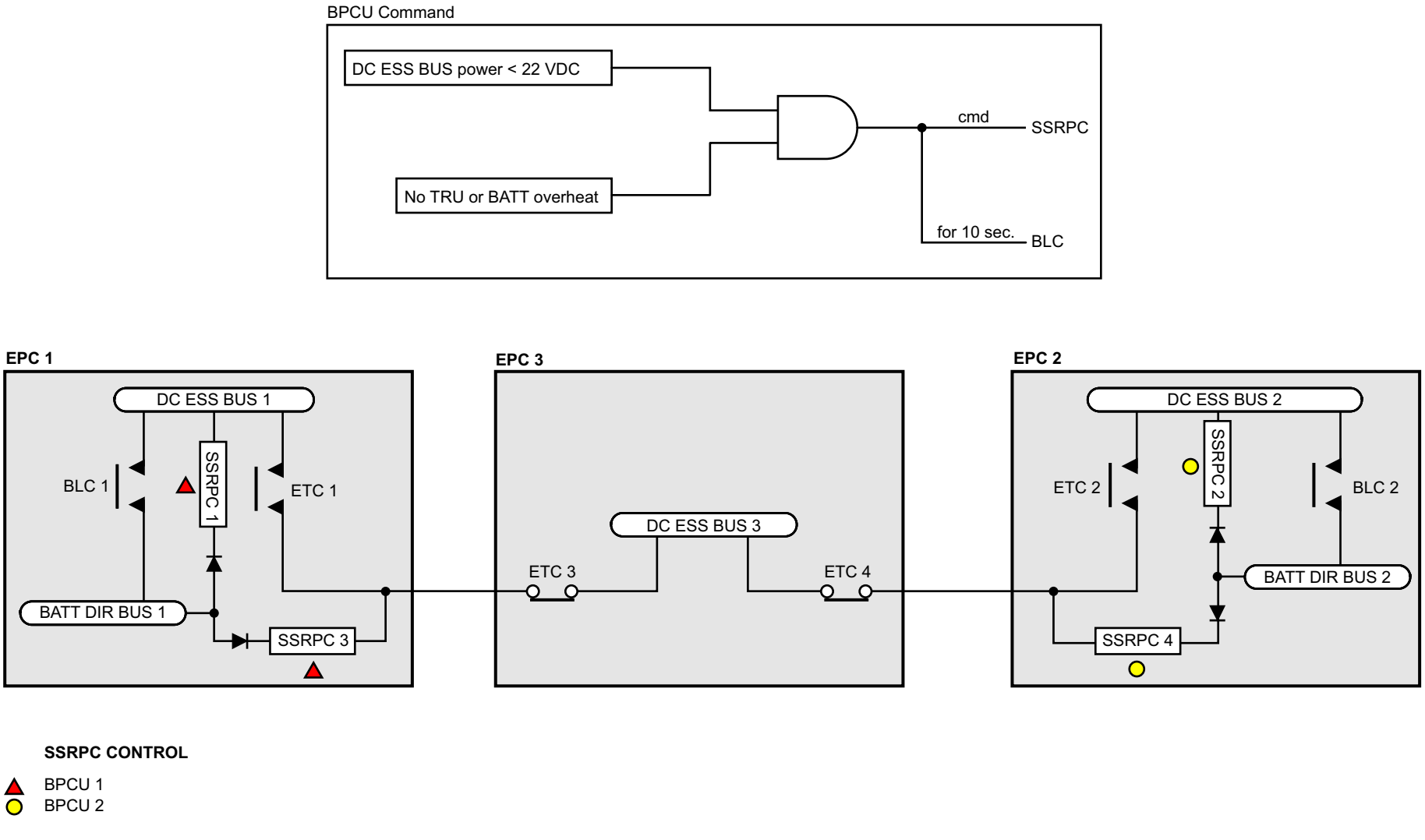

Figure 66: Interrupt-Free DC ESS BUS Operation

DIFFERENTIAL CURRENT PROTECTION

The primary AC distribution system uses differential protection (DP) functions to prevent differential current across single phases of the 3-phase AC distribution system. Differential current protection includes the following:

- EPC differential current protection
- TIE BUS differential protection

EPC Differential Current Protection

The electrical power center (EPC) internal bus bars and interfaces are monitored for current faults. Four sets of current transformers (CTs) in EPC 1, five sets of CTs in EPC 2, and three sets of CTs in EPC 3 are used to protect the AC load bus interfaces internal to the EPCs.

EPC 1 and EPC 2 Differential Current Protection

In EPC 1 and EPC 2, the current supplied by the associated VFG is monitored by line current transformers (LCT) 1 and LCT 2 respectively, reporting to the associated GCU. The GCU continuously reports LCT current to its respective BPCU.

When the AC BUS is supplied from the opposite AC BUS, a bus tie contactor current transformer (BCT) monitors the current and reports to the associated BPCU.

Each AC motor pump contactor has a CT used to monitor the current supplied to the associated ACMP. This information is supplied to the BPCU.

Associated TRU and EPC thermal circuit breaker (TCB) feeds are connected together to sum their outputs.

A differential protection current transformer (DPCT) measures current supplied to the AC ESS BUS (in EPC 3). This current is reported to the BPCU.

When AC BUS 1 is being powered from VFG 1, the BPCU detects an EPC 1 differential protection (DP) condition if any one phase of the sum of CT 2, DPCT 1, and BCT 1 current is less than the same phase of LCT 1 by more than 100 A.

When AC BUS 2 is being powered from VFG 2, the BPCU detects an EPC 2 DP condition if any one phase of the sum of CT 3, CT 4, DPCT 2, and BCT 2 current is less than the same phase of LCT 2 by more than 100 A.

Where a DP fault occurs with the VFG supplying the AC BUS, the BPCU sends a BPCU requested lockout to the GCU. This causes the GCU to shut down the generator and open the generator line contactor.

When AC BUS 1 is being powered through the bus tie (VFG 2, external power, or APU generator), the BPCU detects an EPC 1 DP condition if any one phase of the sum of CT 2 and DPCT 1 current is less than the same phase of BCT 1 by more than 100 A.

When AC BUS 2 is being powered from through the bus tie (VFG 1, external power or APU gen), the BPCU detects an EPC 2 DP condition if any one phase of the sum of CT 3, CT 4, and DPCT 2 current is less than the same phase of BCT 2 by more than 100 A.

When the AC BUS is being powered from the bus tie and an EPC 1 or EPC 2 DP condition is true, the BPCU de-energizes and locks out the associated BTC.

An EPC 1 or EPC 2 DP fault is reset with a cold start of the BPCU.

Copyright © Bombardier Inc.

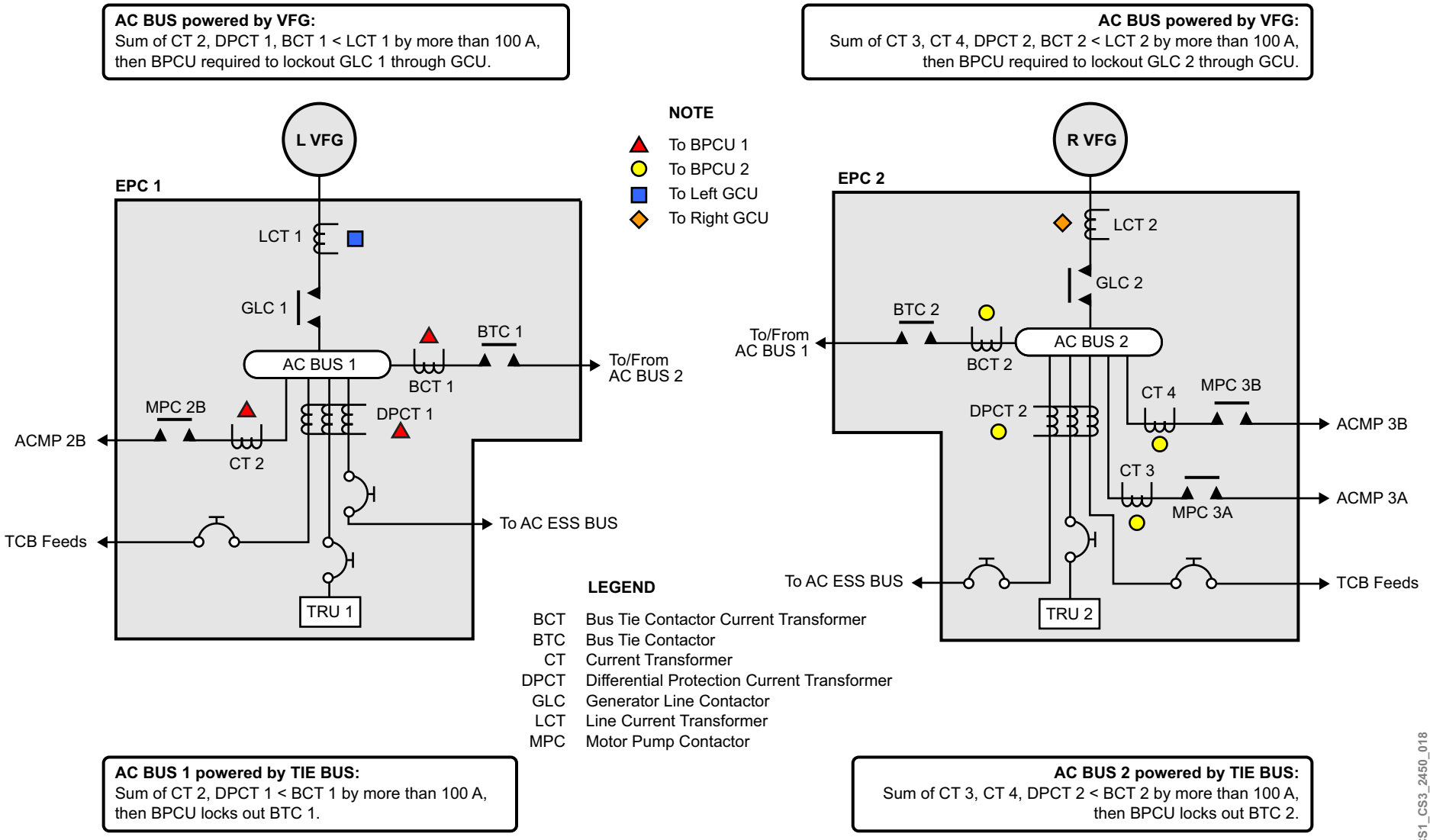

Figure 67: EPC 1 and EPC 2 Differential Protection

Copyright © Bombardier Inc.

EPC 3

The EMPC monitors the current draw in EPC 3 through three current transformers. The EMPC monitors the AC ESS BUS CT (CT 1), EBC 1 CT (CT 2), and EBC 2 CT (CT 3) to perform EPC 3 tie bus differential protection. The CTs are connected together to sum their outputs before sending this value to the EMPC.

The EMPC detects an EPC 3 DP condition if any one phase of the sum of the CT 2 and CT 3 current is greater than the same phase of CT 1 by more than 75 A.

If the EPC 3 DP condition is true for 100 ms, the EMPC de-energizes and locks out EBC 1 as well as energizes and locks out EBC 2.

The EPC 3 DP fault is reset by a cold start of the EMPC.

Copyright © Bombardier Inc.

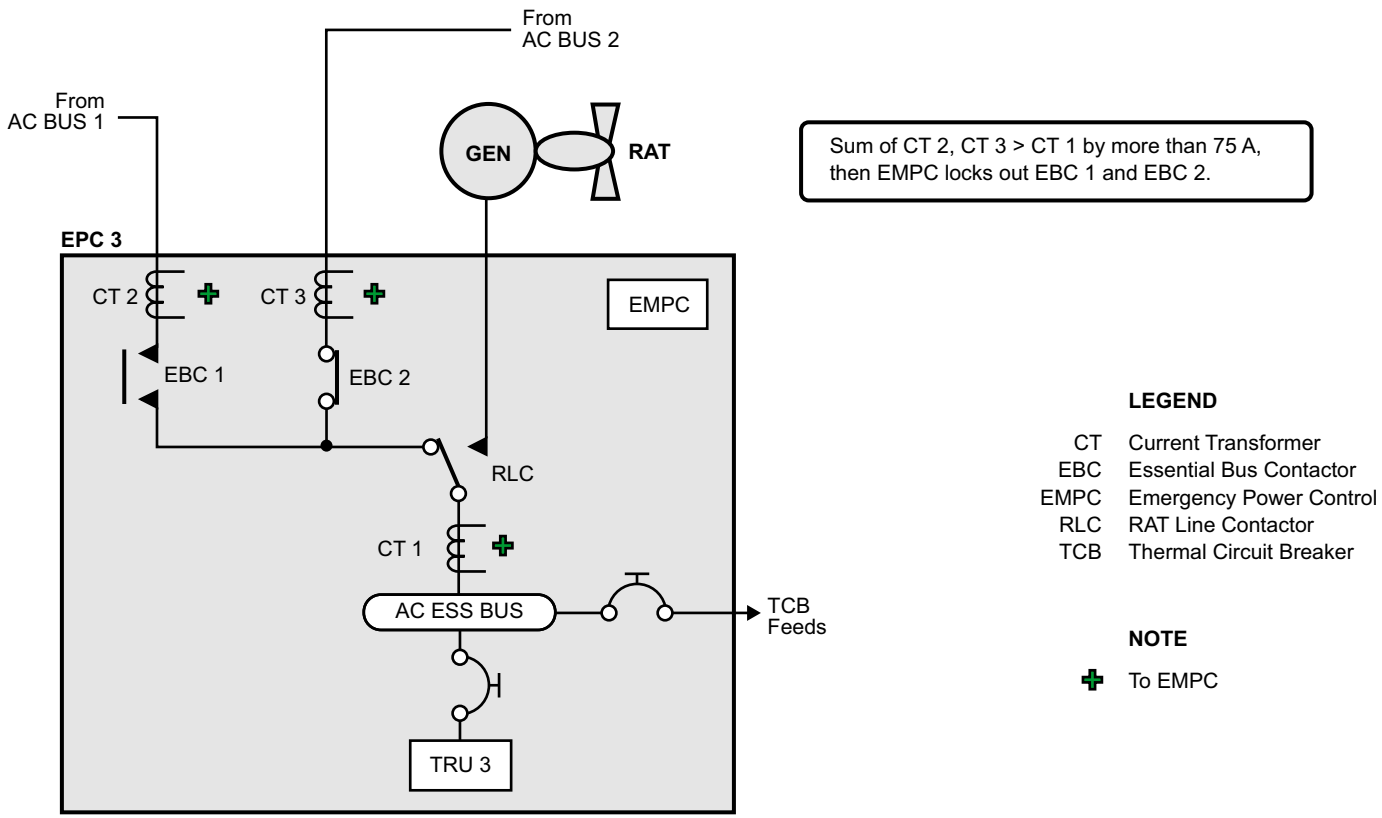

CS1_CS3_2450_019

Figure 68: EPC 3 Differential Protection

Tie Bus Differential Protection

Bus tie differential protection monitors the current supplied by the source to AC BUS 1 and/or AC BUS 2, and determines if a current differential exists on any single phase.

The following table provides information on bus tie differential protection. It indicates the source supplying AC BUS 1 and/or AC BUS 2, and the criteria needed to activate bus tie differential protection.

For example, with external power supplying both AC BUS 1 and AC BUS 2, bus tie differential protection is activated if the external power current transformer EPCT current is greater than the sum of BCT 1 and BCT 2 by more than 100 A on any single phase.

If the APU generator is supplying power and bus tie differential protection is activated, BPCU 2 will send a BPCU request lockout signal to the APU GCU. This causes the APU generator to shut down and the APU line contactor to de-energize and lock out.

If any bus tie differential protection is detected for 100 ms, the BPCUs perform the following:

- BPCU 1 de-energizes and lock outs the ELC and BTC 1
- BPCU 2 de-energizes and lock outs BTC 2

The bus tie differential protection is reset by performing a cold start of the BPCUs.

Copyright © Bombardier Inc.

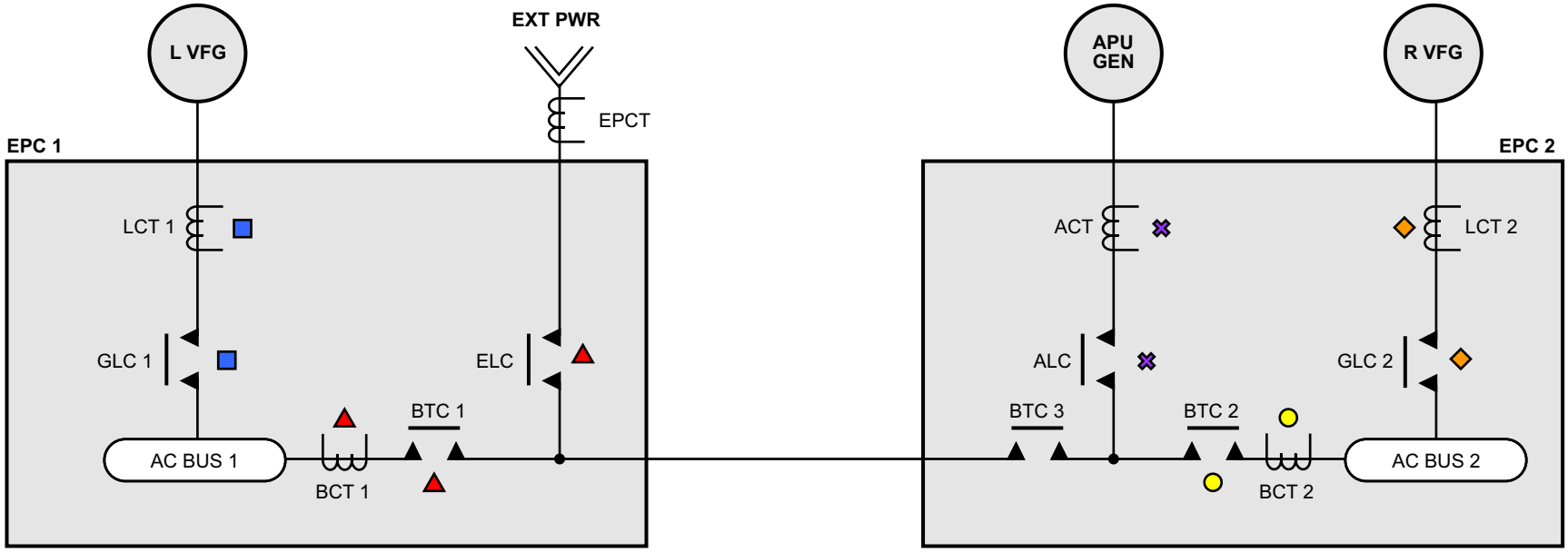

NOTE

- To APU GCU
- To BPCU 1
- To BPCU 2
- To Left GCU
- To Right GCU

SOURCE	BUS		CRITERIA
	AC BUS 1	AC BUS 2	> Threshold is Minimum 100 ± 30 amp Any Phase
External Power	X	X	EPCT > BCT 1 + BCT 2
External Power	X		EPCT > BCT 1
External Power		X	EPCT > BCT 2
APU Gen	X	X	ACT > BCT 1 + BCT 2
APU Gen	X		ACT > BCT 1
APU Gen		X	ACT > BCT 2
VFG 1	X	X	BCT 1 > BCT 2
VFG 2	X	X	BCT 2 > BCT 1

CS1_CS3_2450_020

Figure 69: Tie Bus Differential Protection

Copyright © Bombardier Inc.

MONITORING AND TESTS

The following page provides the crew alerting system (CAS) and INFO messages for the primary power distribution.

CAS MESSAGES

Table 11: CAUTION Messages

MESSAGE	LOGIC
AC BUS 1	AC BUS 1 not powered with at least one AC primary power source available.
AC BUS 2	AC BUS 2 not powered with at least one AC primary power source available.
AC ESS BUS	AC ESS BUS not powered with at least one AC primary power source available or in emergency mode.
DC BUS 1	DC BUS 1 not powered with at least one AC primary power source available.
DC BUS 2	DC BUS 2 not powered with at least one AC primary power source available.
DC ESS BUS 1	DC ESS BUS 1 not powered.
DC ESS BUS 2	DC ESS BUS 2 not powered.
DC ESS BUS 3	DC ESS BUS 3 not powered.
DC EMER BUS	DC EMER BUS not powered.

Table 12: ADVISORY Messages

MESSAGE	LOGIC
LOAD SHED	Automatic load shed commanded.
ELECTRICAL FAULT	Loss of redundant or noncritical function for the electrical system (refer to INFO messages).

Table 13: STATUS Messages

MESSAGE	LOGIC
ELEC BUS ISOL MAIN	AC BUS 1, AC BUS 2, DC BUS 1, DC BUS 2, DC ESS BUS 1, and DC ESS BUS 2 cross feeding inhibited.
ELEC BUS ISOL ESS	AC ESS BUS and DC ESS BUS 3 cross feeding inhibited.

Table 14: INFO Messages

MESSAGE	LOGIC
24 ELECTRICAL FAULT - BPCU INOP	BPCU inoperative.
24 ELECTRICAL FAULT - BPCU 1 DEGRADED	BPCU minor fault.
24 ELECTRICAL FAULT - BPCU 2 DEGRADED	BPCU minor fault.
24 ELECTRICAL FAULT - EPC INOP	EPC inoperative.
24 ELECTRICAL FAULT - EPC 1 DEGRADED	EPC 1 minor fault.
24 ELECTRICAL FAULT - EPC 2 DEGRADED	EPC 2 minor fault.
24 ELECTRICAL FAULT - EPC 3 DEGRADED	EPC 3 minor fault.

Copyright © Bombardier Inc.

24-01 SECONDARY POWER DISTRIBUTION

GENERAL DESCRIPTION

The secondary power distribution system (SPDS) provides 115 VAC and 28 VDC to the aircraft loads. The distribution of this power is controlled by five control and distribution cabinets (CDCs), and by circuit breaker panels (CBPs) located in the flight deck.

CDCs distribute AC and DC electrical power from the electrical power centers (EPCs) to aircraft loads of less than 15 A each. Aircraft systems provide information to the CDCs, which process the logic of each subsystem and control power output to end user systems.

The CDCs use solid-state power controllers (SSPCs) for logic switching and load protection.

The CBPs use thermal circuit breakers for load protection. The CBPs provide the essential AC and DC power sources.

The CDCs distribute power from the electrical power centers to the secondary loads as follows:

- CDC 1 distributes power from AC BUS 1, DC BUS 1, and DC ESS BUS 1, located in EPC 1
- CDC 2 distributes AC BUS 2, DC BUS 2, and DC ESS BUS 2 power, located in EPC 2
- CDC 3 distributes AC BUS 1 and DC BUS 1 power, located in EPC 1
- CDC 4 distributes AC BUS 2 and DC BUS 2 power, located in EPC 2
- CDC 5 distributes AC BUS 1, AC BUS 2, DC BUS 1, and DC BUS 2 power, located in EPC 1 and EPC 2

The CBPs distribute power from the EPCs to the secondary loads as follows:

- The left CBP distributes AC ESS BUS and DC ESS BUS 3 power, located in EPC 3
- The right CBP distributes DC ESS BUS 3 power, located in EPC 3

Copyright © Bombardier Inc.

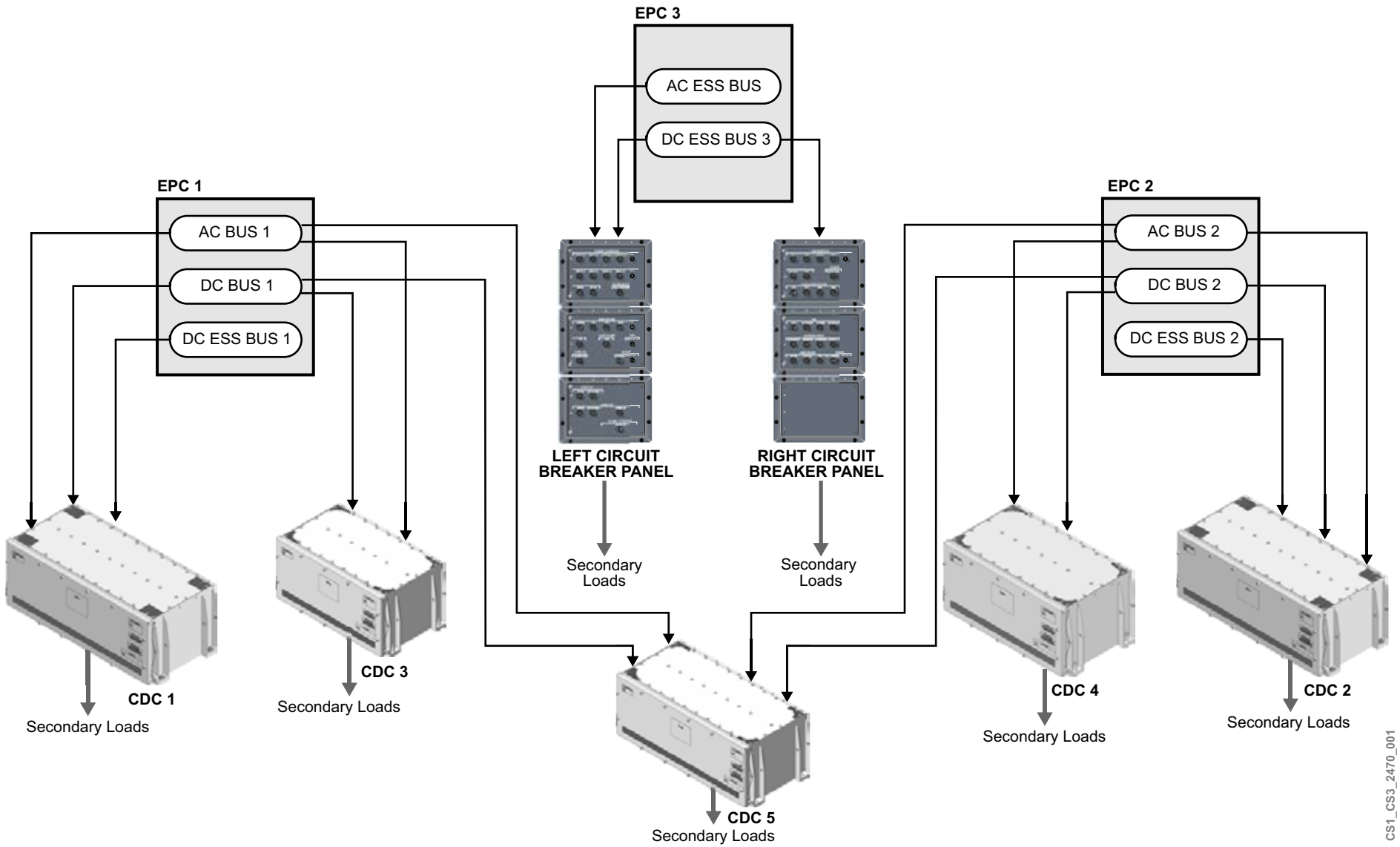

Figure 70: Secondary Power Distribution

COMPONENT LOCATION

CONTROL AND DISTRIBUTION CABINETS

The five CDCs are installed as follows:

- CDC 1 and CDC 2 are installed in the mid equipment bay
- CDC 3 and CDC 4 are installed in the forward equipment bay
- CDC 5 is installed behind the aft cargo bay

Each CDC is a chassis with removable line replaceable modules (LRMs).

Copyright © Bombardier Inc.

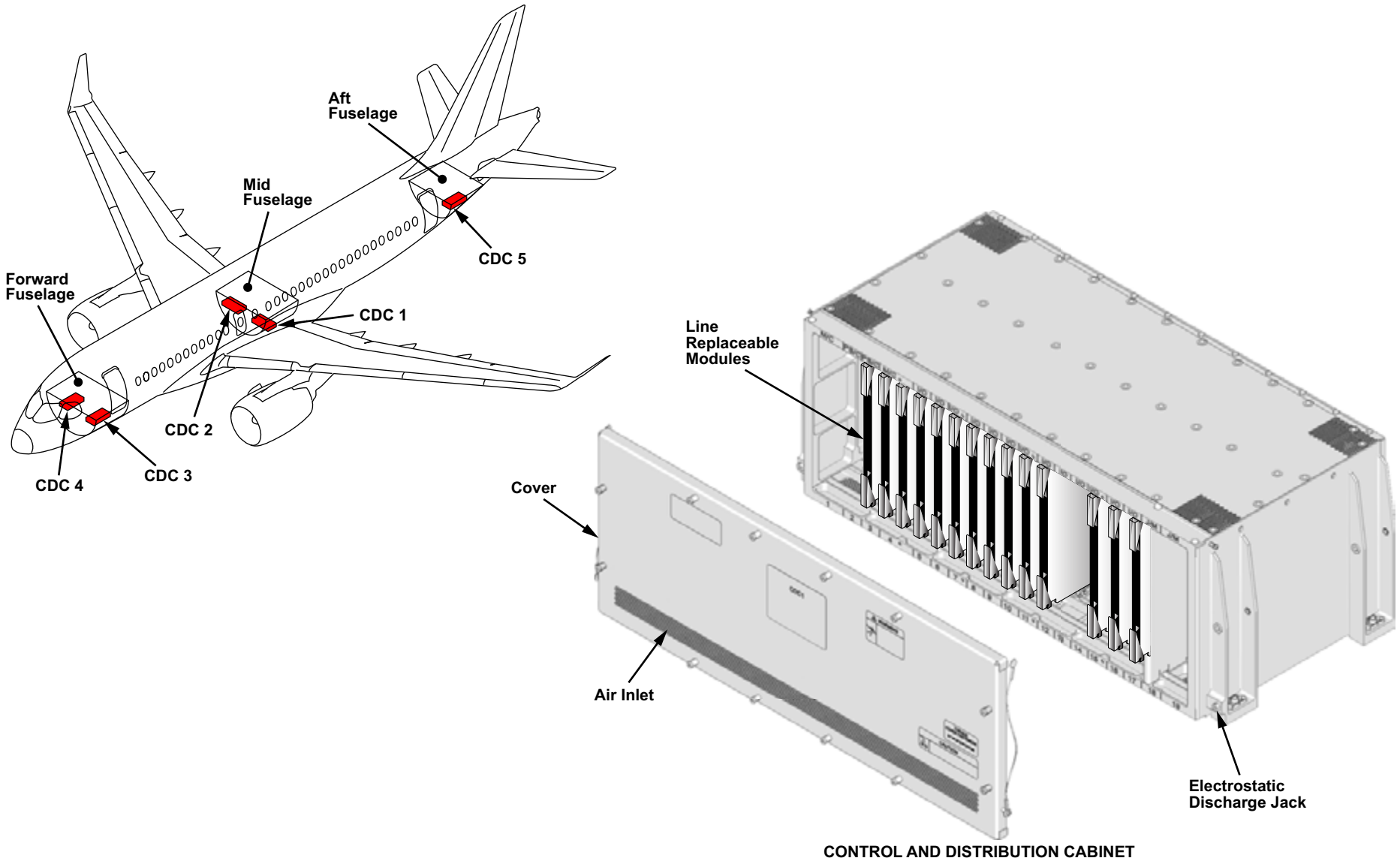

Figure 71: Control and Distribution Cabinets

DETAILED COMPONENT INFORMATION

CONTROL AND DISTRIBUTION CABINET LINE REPLACEABLE MODULE ASSIGNMENT

Each CDC has a number of removable line replaceable modules (LRMs) as follows:

- CDC 1 and CDC 2 have provisions for 19 LRMs
- CDC 3 and CDC 4 have provisions for 16 LRMs
- CDC 5 has provisions for 20 LRMs

All CDCs contain the following LRMs:

- Power supply-communications (PS-comms) LRMs
- Discrete input/output (I/O) LRM
- AC power modules (or SSPC LRMs)
- DC power modules (or SSPC LRMs)
- Junction LRMs

CDC 1 and CDC 2 also contain the following additional LRMs:

- Redundant microprocessor-communications (micro-comms) LRMs

NOTE

Each of the LRMs within the CDCs are assigned a number. Reference to these numbers can be found in various technical publications and electrical schematics. For example, CDC 2-9 refers to LRM 9 within CDC 2.

Although the microprocessor-comms LRMs within CDC 1 and CDC 2 (master CDCs) occupy two slots, they are counted as one LRM.

In CDC 1 and CDC 2, there are 21 slots and 19 LRMs.

Copyright © Bombardier Inc.

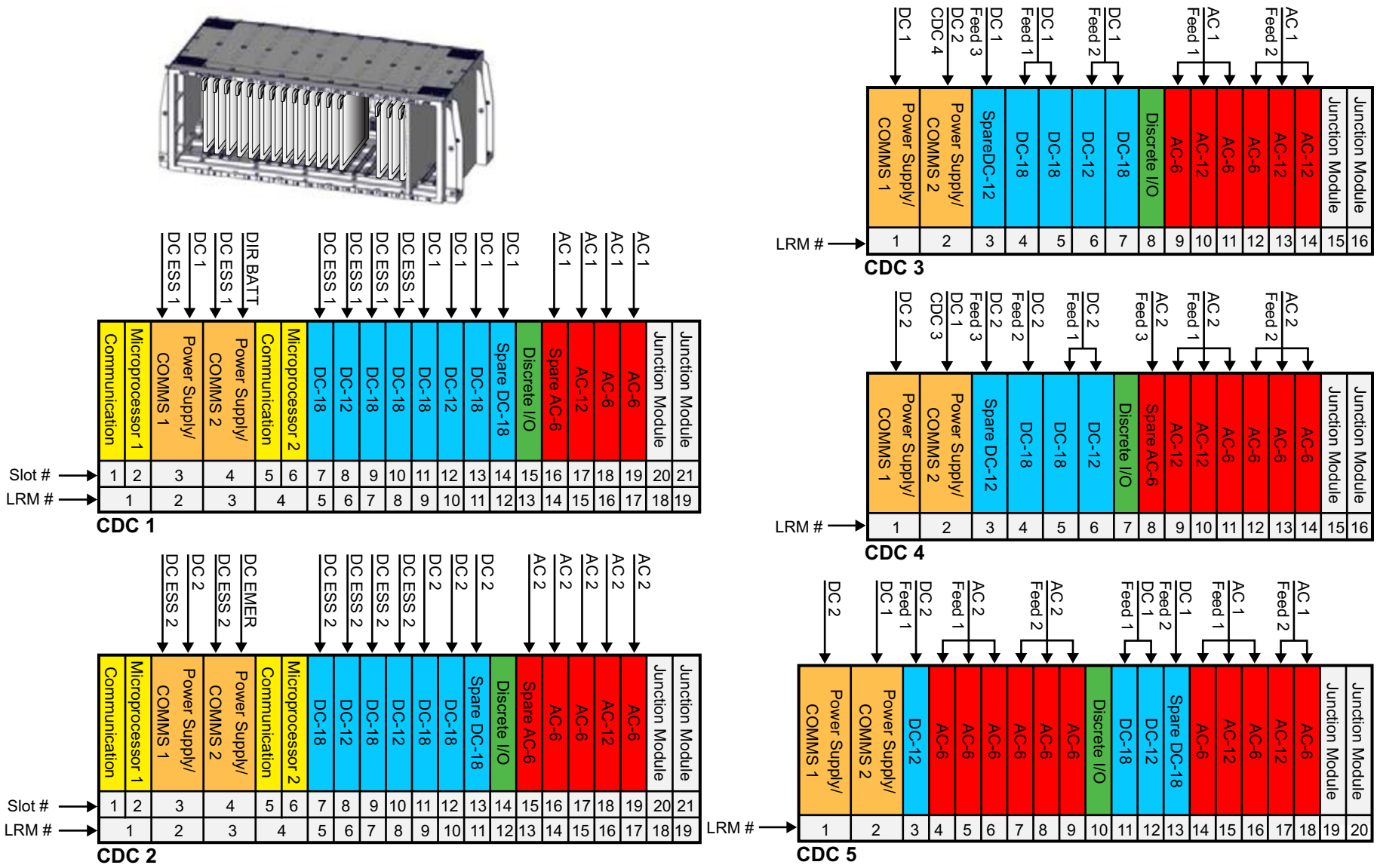

Figure 72: CDC Line Replaceable Module Assignments

MASTER AND SATELLITE CDCS

CDC 1 and CDC 2 are referred to as master CDCs. CDC 3, CDC 4, and CDC 5 are referred to as satellite CDCs.

CDC 1 controls CDC 3 and CDC 5, while CDC 2 controls CDC 4. Communication between the CDCs occurs through dual TTP buses.

Communication with the avionics suite is via dual AFDX buses with the DMCs.

Copyright © Bombardier Inc.

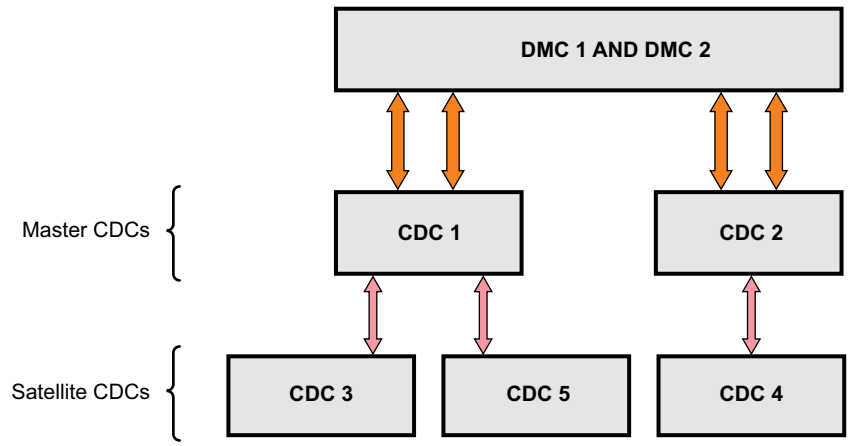

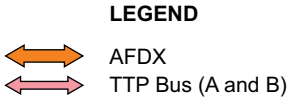

CS1_CS3_2470_021

Figure 73: Master and Satellite CDCs

CONTROL AND DISTRIBUTION CABINET INTERNAL INTERFACE

Control and Distribution Cabinets 1 and 2

CDC 1 and CDC 2 are nearly identical, except for the buses that power the CDCs, as well as the sources of AC and DC power that each LRM routes to individual user systems.

The main functions of the CDCs are to:

- Control the solid-state power controllers (SSPCs) and discrete outputs (D/Os)
- Read discrete inputs (D/Is)
- Communicate control with the associated satellite CDCs
- Execute utility system management logic
- Execute electrical load management logic
- Enable on-aircraft testing and software uploads
- Provide communication between the EPGDS and DMCs

Microprocessor-Communications Line Replaceable Modules

The microprocessor-communications (micro-comms) LRMs provide the main logic and interface modules for all CDCs. They communicate with the data concentrator unit module cabinets (DMCs) to receive and transmit data used for maintenance and troubleshooting, flight deck displays, and synoptic and CAS messages. They use TTP buses to communicate with other CDCs. These LRMs also contain the circuit breaker application.

A number of discrete inputs assist the micro-comms LRMs to determine the mode of operation. These include the following:

- Weight-on-wheels (WOW)
- Ground service mode active
- Software download enable
- Pin programming for application (CS100/CS300) identification

Only one micro-comms LRM within each CDC is active and in control at a time, while the other micro-comms LRM is in standby mode. The microprocessor software runs identically on both the active and standby processors. On power-up, the non-volatile memory (NVM) determines the previously active LRM and returns it to active mode. If the NVM cannot determine which LRM was previously active, the first LRM to respond assumes control and operates in active mode.

Post Power Up Microprocessor Power Up Toggle

Once the power up is complete and the active LRM has been determined, the LRMs are toggled to make the standby LRM the active LRM. This minimizes the chances of hidden failures with one LRM always being active.

When the active LRM fails, the standby LRM automatically assumes control.

Time-triggered protocol (TTP) communication with the micro-comms LRM in CDC 1 and CDC 2 is through external connections and over the backplane. For CDCs 3, 4, and 5, TTP communication is through external connections only. Internal communications with the other LRMs in the CDC is through serial buses over the backplane.

Power Supply-Communication Line Replaceable Modules

Each CDC has two redundant power supply-communications (PS-comms) LRMs. These LRMs perform two major functions: power supply and communications. All of the AC and DC power LRMs as well as the discrete input/output module interface with the PS-comms LRMs.

The power supply-comms LRMs receive 28 VDC from DC buses to provide internal power for the operation of all LRMs. CAN BUS communication with the EPCs, and subsequently to the flight deck circuit breaker panels, monitors the status of circuit protective devices such as thermal circuit breakers. Pin strapping is used for unit identification. The power supply function provides 3 VDC and 28 VDC control power for operation of the LRMs within the CDC. Each LRM has provisions for three power sources, but only receives one or two 28 VDC feeds.

Copyright © Bombardier Inc.

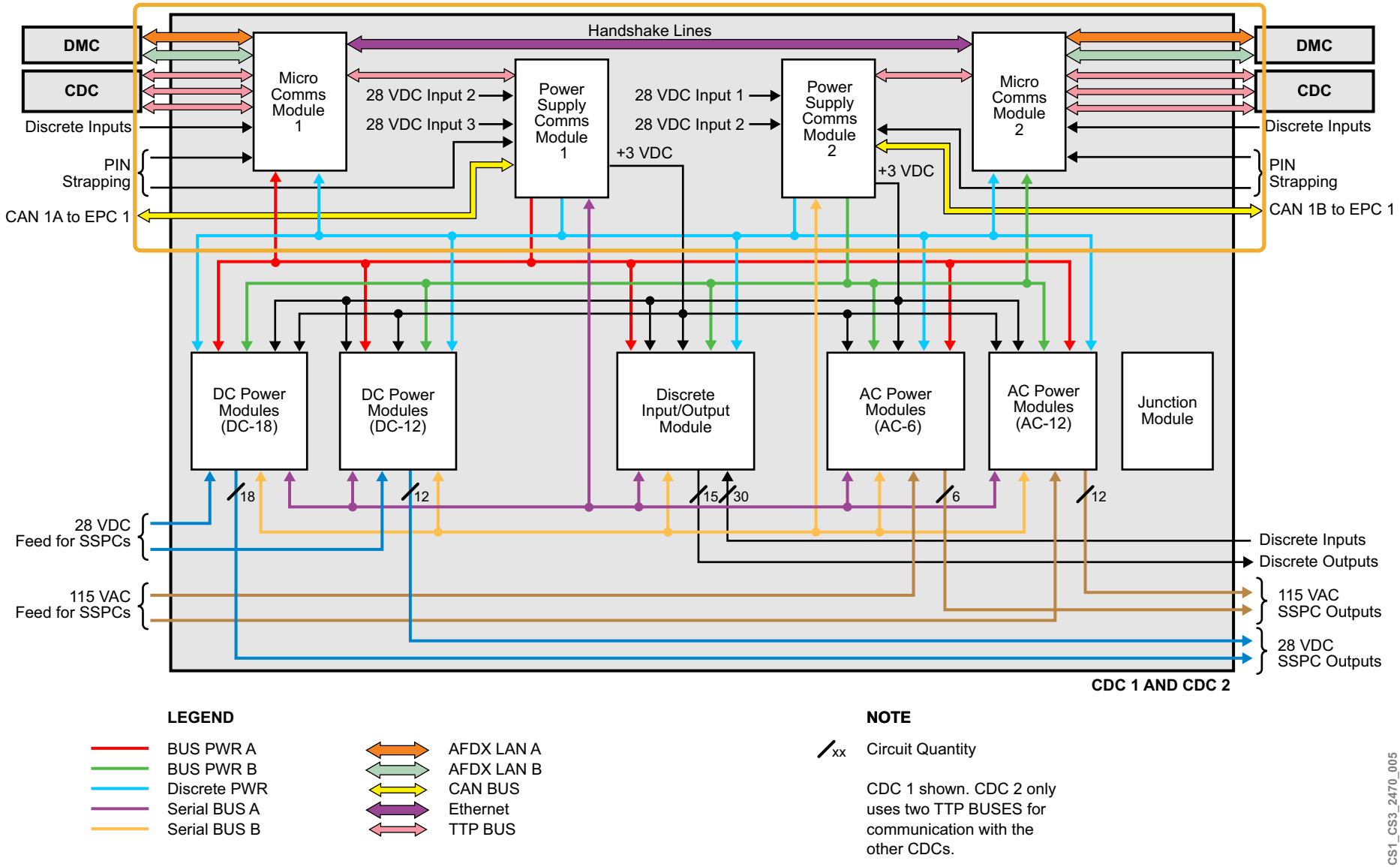

LEGEND

- BUS PWR A
- BUS PWR B
- Discrete PWR
- Serial BUS A
- Serial BUS B
- AFDX LAN A
- AFDX LAN B
- CAN BUS
- Ethernet
- TTP BUS

NOTE

/xx Circuit Quantity

CDC 1 shown. CDC 2 only uses two TTP BUSES for communication with the other CDCs.

CS1_CS3_2470_005

Figure 74: Control and Distribution Cabinets 1 and 2 Micro-Comms and Power Supply-Comms Modules

AC and DC Power Modules

Thermal circuit breakers in the EPCs provide 28 VDC and 115 VAC for the solid-state power controllers (SSPCs) on the AC and DC power LRMs. The SSPCs provide a 28 VDC or 115 VAC output to the user system when commanded by the active micro-comms LRM.

Discrete Input/Output Modules

Discrete input/output modules, also controlled by micro-comms, extend the capabilities of the CDC to interface with other aircraft systems. These LRMs are used to receive discrete input signals for logic switching and to provide low-current discrete outputs. Each CDC has a single discrete I/O module.

Junction Modules

The junction modules simplify aircraft wiring by providing multiple termination points to splices, diodes, and relays used by the systems on the aircraft.

Control and Distribution Cabinet Software

Embedded CDC software is uploaded into the micro-comms LRM flash memory through the Ethernet test link interface through ARINC 615A from the onboard data loader. The software coordinates the operation of all LRMs and the interfaces with the avionics system.

There are two separate loadable files:

- Configuration file (CF)
- Utility software

Each software file has a separate part number.

Configuration File

The configuration file (CF) provides the operational data to configure CDC 1 and CDC 2.

The information contained in the CF enables the CDC application software to configure the SSPCs and discrete outputs under its control, including those in the associated satellite CDCs. Information contained within the configuration file includes the CB name, CB rating, phase grouping, and SSPC default state.

Utility Software

The utility software controls the SSPCs and discrete outputs, based on defined input parameters and logic. The utility software also determines when the SSPC will provide the output to power the user system.

Copyright © Bombardier Inc.

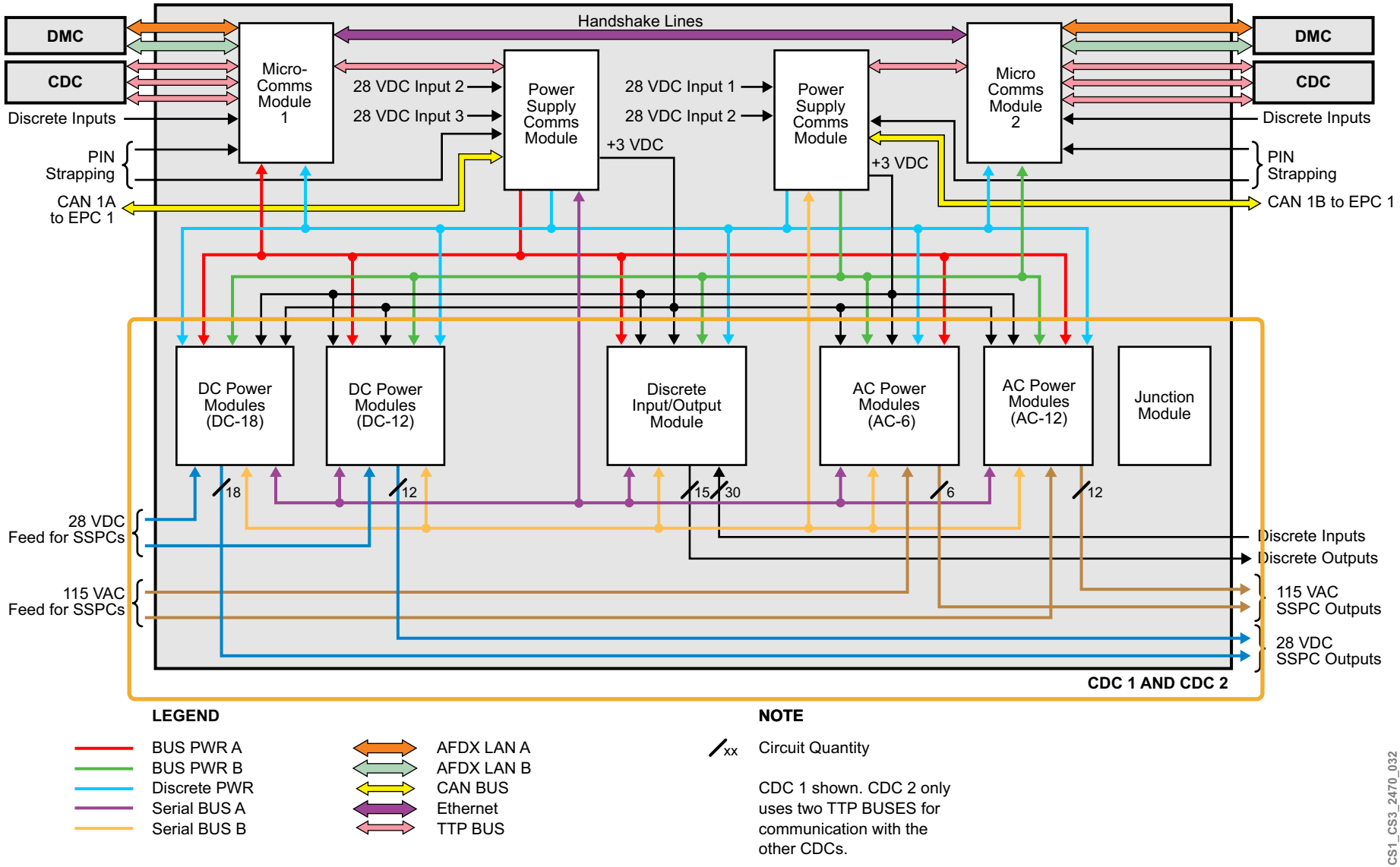

Figure 75: Control and Distribution Cabinets 1 and 2 Discrete Input/Output and Junction Modules

Copyright © Bombardier Inc.
CS130-21.02-06.00-121418

Control and Distribution Cabinets 3, 4, and 5

CDCs 3, 4, and 5 are very similar to CDCs 1 and 2, except in the number of AC and DC power LRMs that are installed. Also, CDCs 3, 4, and 5 do not have microprocessor-communications LRMs and are therefore slaved to CDC 1 and CDC 2 for operation.

Copyright © Bombardier Inc.

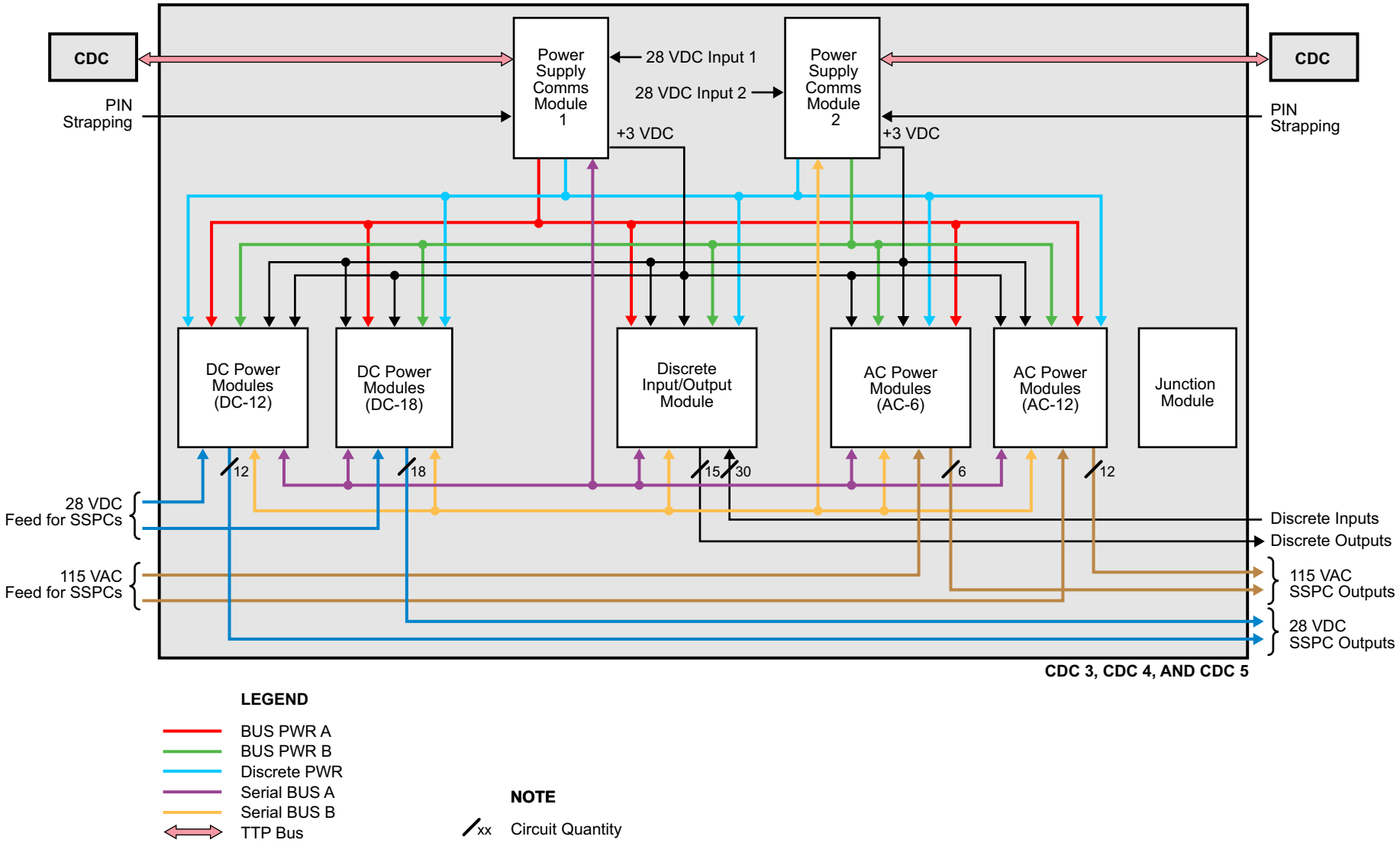

Figure 76: Control and Distribution Cabinets 3, 4, and 5 Block Diagram

POWER SUPPLY COMMS MODULE

For internal power, each CDC receives 28 VDC from a number of redundant power sources. The sources are classified as:

- Primary (PRI)
- Secondary (SEC)
- Maintenance (MAINT)

Primary Power

The primary power sources are protected by thermal circuit breakers in EPC 1 and EPC 2.

EPC 1 provides the primary power sources for CDC 1, CDC 3, and CDC 5 using a combination of DC BUS 1 and DC ESS BUS 1.

EPC 2 provides the primary power sources for CDC 2 and CDC 4 using DC BUS 2 and DC ESS BUS 2.

Secondary Power

The secondary power sources are protected by either thermal circuit breakers or solid-state power controllers (SSPCs). These power sources provide redundancy in the event of an electrical bus failure.

CDC 1 and CDC 2 power supply comms modules. Each have dual power sources for increased redundancy. Due to the time delay that occurs in electrical bus switching in a fault condition, a SSPC provides a secondary power source to CDC 1 and CDC 2 to prevent an interruption in power to the CDCs. This prevents unwanted momentary power interruptions that could cause the LRUs to reboot or system faults to occur.

EPC 1 provides a secondary power source to CDC 1 power supply comms module 1 through a thermal circuit breaker on DC BUS 1.

EPC 2 provides secondary power sources to CDC 2 power supply comms module 1. CDC 5 power supply comms module 2 on DC BUS 2 using thermal circuit breakers.

CDC 1 provides a secondary power source for CDC 2 power supply comms 2 and CDC 4 power supply comms 2 using SSPCs. These SSPCs are powered by DC BUS 1 power.

CDC 2 provides a secondary power source for CDC 1 power supply comms 2 and CDC 3 power supply comms 2 using SSPCs. These SSPCs are power by DC BUS 2.

Maintenance Mode

Maintenance mode power is also provided by EPC 1 for CDC 1 and CDC 2 through the maintenance mode relay using BATT DIR BUS 1 and the DC EMER BUS. The other CDCs are not powered in maintenance mode.

Copyright © Bombardier Inc.

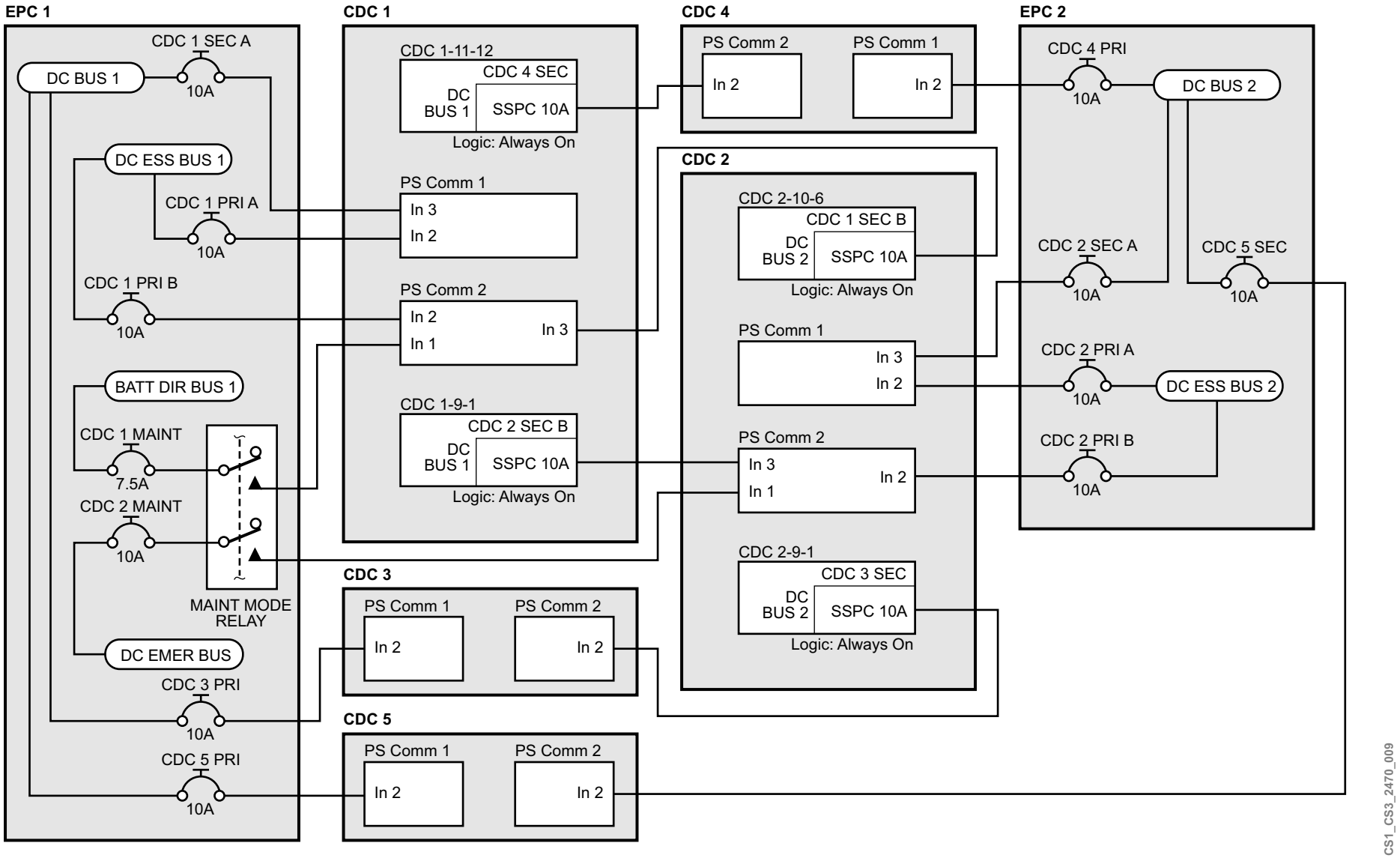

Figure 77: Power Supply-Comms Module

DISCRETE INPUT/OUTPUT MODULE

Each CDC has one discrete input/output (I/O) module. This module enables the CDC to receive discrete inputs and provide discrete outputs.

Discrete inputs are used for logic processing of both the solid-state power controllers (SSPCs), and discrete outputs. An example of a discrete input is an ice detection signal that is used by the microprocessor for SSPC logic switching.

Discrete outputs are used to provide commands from the microprocessor to airframe systems. An example of a discrete output is a command to turn on a hydraulic AC motor pump (ACMP).

Each I/O is controlled by a peripheral interface controller (PIC). The PIC provides a serial bus interface with the active micro-comms LRM. The active micro-comms LRM controls the switching of the output.

There are a total of 30 discrete inputs and 15 discrete outputs. The inputs and outputs are either 28 V/open or ground/open type.

The rating of each output is limited to 250 mA.

The PS-comms LRM provides 3 VDC and 28 VDC power for operation of the module. In addition, it provides power for the 28 V/open outputs.

A red LED on the module indicates its functional status. The LED illuminates when the network has been verified and the module is receiving valid commands from the active processor.

Inputs and outputs are processed by the active micro-comms LRM. Communication between the discrete I/O module and the micro-comms LRM is through redundant serial buses on the backplane of the CDC. Faults are reported to the micro-comms LRM.

Upon loss of communication, the discrete output is commanded into a predefined default state within 1 second. The default states are ON, OFF, and LAST commanded.

Software part numbers are stored in the NVM.

Copyright © Bombardier Inc.

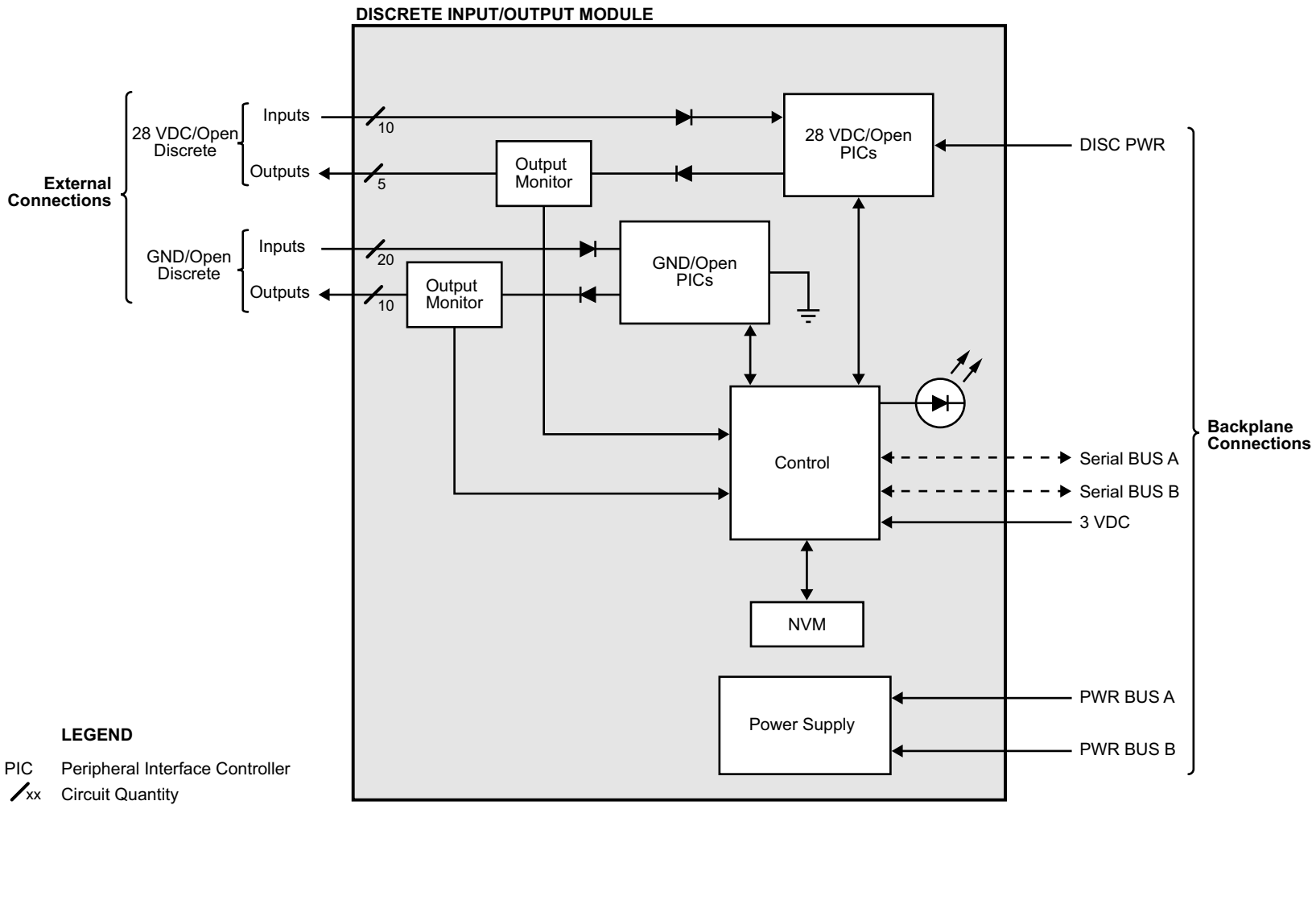

Figure 78: Discrete Input/Output Line Replaceable Module Block Diagram

JUNCTION MODULE LRM

Two LRM slots in each CDC are occupied by two junction module LRMs.

The junction modules simplify aircraft wiring by providing multiple termination points to splices, diodes, and relays used by systems on the aircraft.

The number and type of circuits in the junction modules are shown in the associated illustration.

Copyright © Bombardier Inc.

JUNCTION MODULE			
Type	**Quantity**	**Circuit**	**Nominal Current**
Type 1 Splice	5	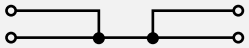	4 A
Type 2 Splice	21	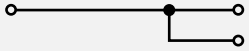	4 A
Type 1 Diode	4		3.5 A
Type 2 Diode	2	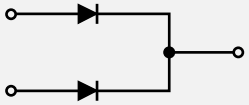	3.5 A
Relay	6	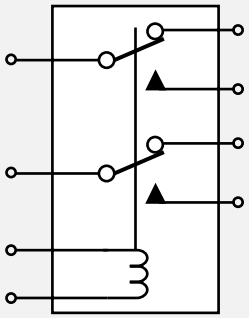	3.75 A (main contacts)

CS1_CS3_2470_015

Figure 79: Junction Module Line Replaceable Module

Copyright © Bombardier Inc.

POWER MODULES

Both AC and DC power modules have programmable and fixed current rating SSPCs. The SSPCs are switched ON or OFF based on the logic provided by the electrical power system and member systems. The switching commands are provided by the in-command micro-comms module.

There are four types of DC and AC power modules: DC 12, DC 18, AC 6, and AC 12. The number associated with each type of module represents the number of SSPCs installed (e.g., AC 6 has 6 AC SSPCs, DC 18 has 18 DC SSPCs, etc.).

Each SSPC is designed to trip at the software-programmed current rating. The circuit breaking function of each SSPC is individually implemented using a peripheral interface controller (PIC).

A fuse provides secondary current protection to the output of each SSPC. For SSPCs that can supply a number of different current ratings, each output is protected by a separate fuse, sized according to the gauge of wire that may be connected. These fuses trip at a rating higher than the SSPC trip rating. A blown fuse requires replacement of the power module. The fuses are not monitored.

The circuit breaker (CB) application in the flight deck indicates the status of each SSPC: IN, OUT, TRIPPED, or LOCKED. SSPC information, including output current and failure modes, is continually communicated by an AFDX BUS.

Each power module has an LED to indicate valid communication with the active micro-comms module.

The SSPC outputs are programmed to assume a default state if internal communications from the micro-comms module is lost. Default states are also used for specific SSPCs if data from other sources is not available. The default states are OFF, ON, and LAST commanded. At power-up, all SSPC outputs are off. After establishing communication with the active micro-comms module, the default function for an SSPC is enabled upon receipt of its first on/off command. Once enabled, the default function remains active until control power to the module is lost. The CDCs contain a number of unused (or spare) SSPC power modules.

DC Power Modules

There are two types of DC power modules: DC 12 and DC 18.

DC power module DC 12 has 12 DC SSPCs, with either four or two current ratings.

DC power module DC 18 has 18 DC SSPCs, with either three, two, or one current ratings.

All SSPCs on the DC power module are fed from one thermal CB on an EPC.

AC Power Modules

There are two types of AC power modules: AC 6 and AC 12. The difference between them is the number and type of SSPCs installed.

All of the SSPCs on a power module are supplied from a 3-phase thermal CB on the EPC.

Where single-phase AC power is required, the load will be connected to a single SSPC. Where 3-phase AC power is required, each phase is protected by a separate SSPC.

To enable the three SSPCs to function together as a single SSPC, they are grouped. When SSPCs are grouped, a single SSPC input commands the on/off control. All three SSPCs respond to the single input command.

If any single-phase of the 3-phase configuration detects an open or short circuit, the other SSPCs will be commanded open within 50 ms. However, if one SSPC of the 3-phase configuration is itself shorted (rather than the circuit it protects), the other SSPCs will continue to operate and provide circuit protection.

Copyright © Bombardier Inc.

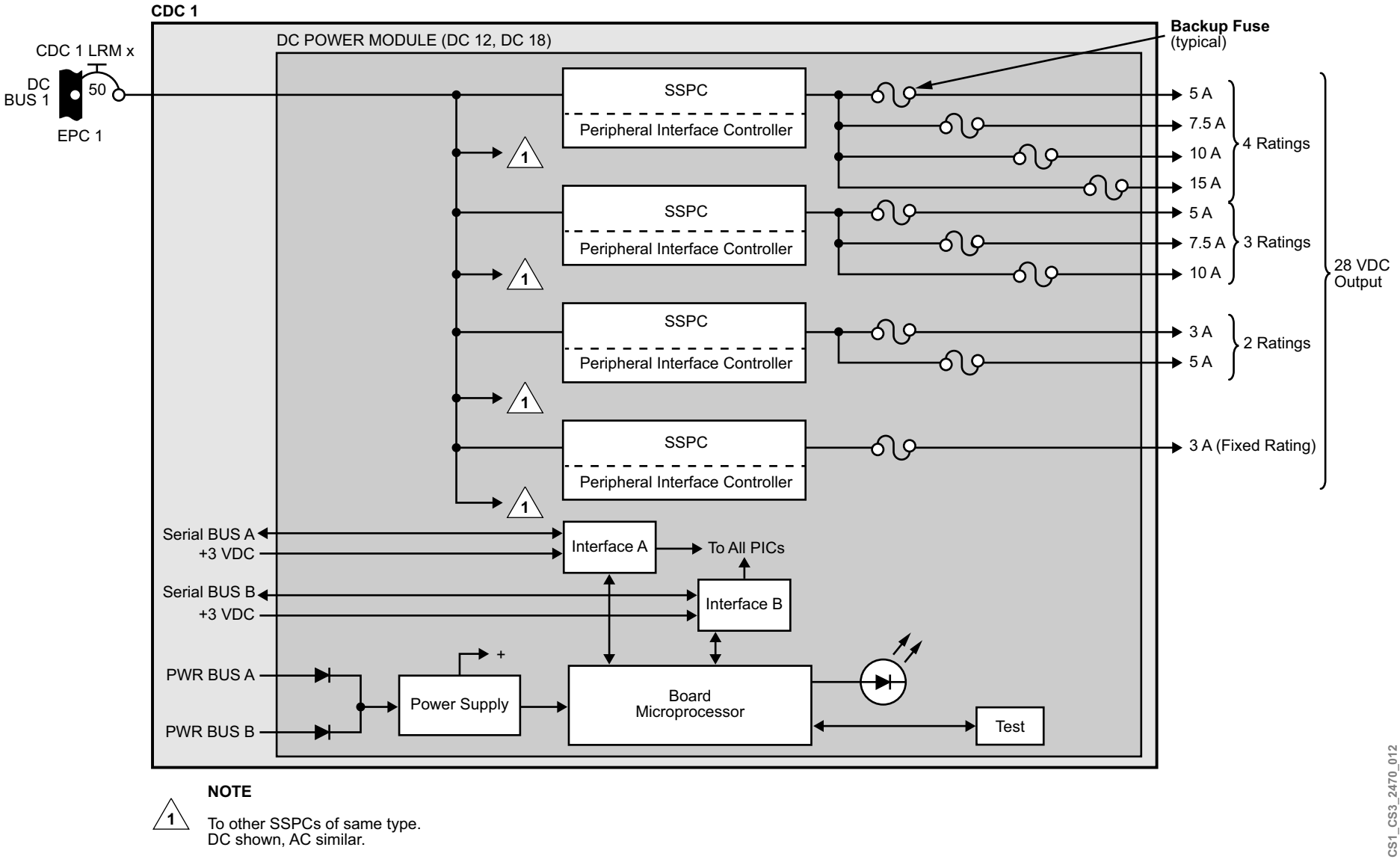

NOTE

1 To other SSPCs of same type.
DC shown, AC similar.

Figure 80: Power Module Block Diagram

SOLID-STATE POWER CONTROLLER

Each CDC contains multiple power modules, that use solid-state power controllers (SSPCs) to provide circuit protection and switching to aircraft loads.

The SSPC provides the functions of a circuit breaker and a switch. Both of these functions are solid-state and are thus considered virtual devices. A peripheral interface controller (PIC) controls and monitors the SSPC. The PIC communicates over a serial bus with the active micro-comms LRM. The CB function of the SSPC, with a programmed trip rating, is individually implemented in the PIC. The switch function is controlled by the active micro-comms LRM.

In addition to being locally stored with each SSPC, the pre-programmed trip rating configuration is continuously transmitted to each SSPC by the active micro-comms LRM.

The following SSPC status information is reported to the active micro-comms LRM:

- Programmed trip rating
- Default configuration
- Voltage
- Current
- CB function (open/closed)
- Switch function (ON/OFF)
- Reason for trip (or BITE fault, if no trip)

During power-up, each SSPC within the CDC is commanded to the OFF state (switch open). Upon completion of the power-up tests, the SSPC virtual switch is commanded to operate under one of the following modes:

- Always ON
- Controlled by utility software

Some SSPCs are categorized as always on. The utility software has no effect upon these SSPCs. They provide a 28 VDC or 115 VAC output as soon as the power source is available.

Based on the number of input parameters, type of input, and complexity of the logic to command SSPCs, the utility logic is classified as either single-input, combinational, or advanced.

The single-input logic switches the SSPC output or discrete output, when the single-input is available.

Combinational logic defines the command for the SSPC, based on multiple discrete parameters. These parameters are combined via a logic that does not involve time delay or latching of the discrete inputs and/or the SSPC output command.

Advanced logic defines the command for the SSPC, based on a number of parameters. They may be discrete and/or analog, and use logic that involves time delay or latching associated with the discrete input and/or SSPC output command.

In the always on mode, the virtual switch is normally closed. As soon as AC or DC power is available, the SSPC provides an output, which will only be terminated if:

- The input power is lost
- The virtual circuit breaker is commanded open (i.e, tripped or OFF)
- All power to the power module is lost

When controlled by utility software, the software logic that controls the closing of the virtual switch must be satisfied before the SSPC virtual switch closes.

Following initial power-up, the SSPCs are designed to continue to operate, even if there is a complete loss of communication with the host power module. Upon complete loss, the individual SSPC continues to provide wire protection functions but will switch the output (load) to a default safe state (ON, OFF, or last commanded ON/OFF state) defined in the CDC configuration file.

Copyright © Bombardier Inc.

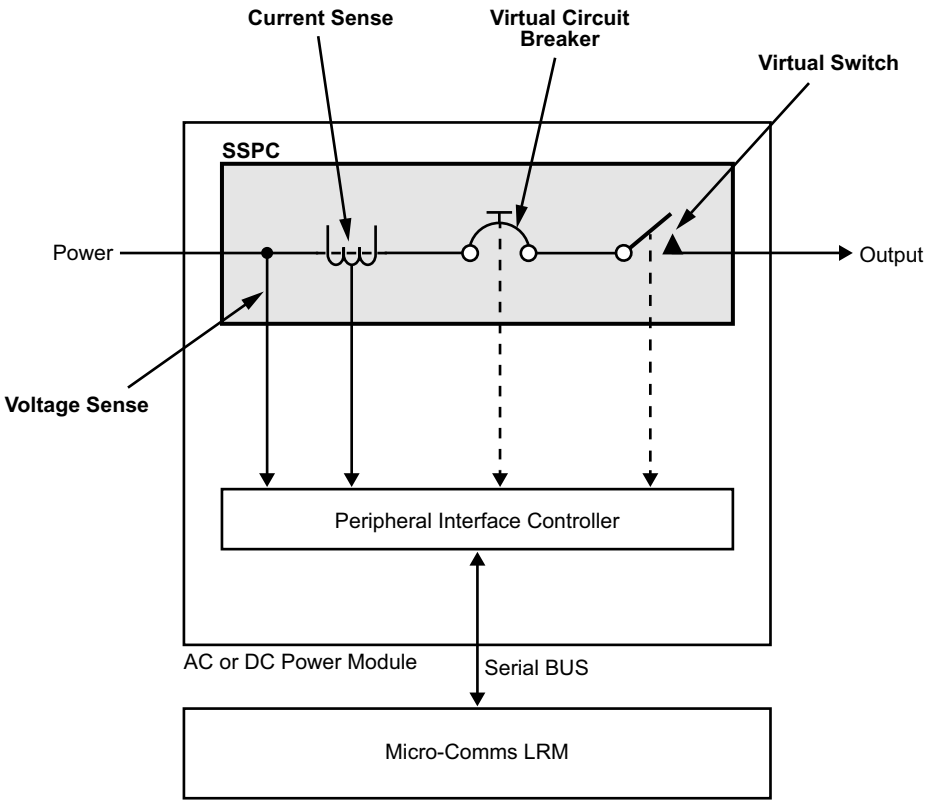

SSPC LOGIC	CONDITIONS FOR TURN ON
Single-Input	Single input turns SSPC on.
Combinational	Multiple discretes. No time delay or no latching of inputs or output command.
Advanced	Number of parameters (analog or discrete) time delay. Latching of inputs or output command.
Always On	Always provides 28 VDC or 115 VAC when the aircraft is powered.

NOTE

Information reported by the SSPC:
· Programmed trip rating
· Default configuration
· Voltage
· Current
· CB function (open/closed)
· Switch function (on/off)
· Reason for trip (or bite fault, if no trip)

CS1_CS3_2470_011

Figure 81: Solid-State Power Controller Block Diagram

LOAD MANAGEMENT

The load management function automatically sheds non-essential loads. This feature ensures that the load demand is always less than the capacity of the source currently online.

Non-essential AC and DC loads that can be shed are identified as part of a load-shed group. There are three AC and four DC load-shed groups. Some AC load-shed groups contain DC loads that are associated with the AC loads. Some DC load-shed groups contain AC loads that are associated with the DC loads.

Each load in the load-shed groups is supplied with electrical power from SSPCs located within the CDCs. To shed these loads, the BPCU in control will send digital signals to CDC 1 and CDC 2 to isolate the SSPCs as part of the load-shed group(s). The individual SSPCs that are shed will be indicated on the CB application.

Restoration

The BPCUs reset the associated DC load-shed signals to the CDCs when the failed TRU is restored, or following a subsequent BPCU power cycle.

When both AC load-shed and DC load-shed occur, and a DC (AC) power source is subsequently recovered, the BPCU only restores the load-shed groups that belong to the DC (AC) shed groups.

Load-Shedding Function Failure

If the load-shedding function fails to remove loads below the overcurrent thresholds, the BPCU overcurrent scheme opens a bus tie contactor (BTC) for AC load-shed functions, or opens DC tie contactor 3 (DTC 3) for DC load-shed functions. If the load-shed function fails to reduce the load below the overcurrent thresholds and the BPCU fails to disconnect the related BTC or DTC, then GCU overcurrent protection opens the line contactor.

The BPCUs provide a second level load management, de-energizing the opposite DC buses if the CDC load shed logic does not operate properly. Refer to the TRU Overcurrent section for more details.

AC Load-Shedding

When operating from a single AC power source, there are 3 AC load-shed groups of nonessential loads that can be shed, if necessary.

The AC load-shed groups have been arranged as follows:

- Group 1 - half of the galley equipment
- Group 2 - half of the galley equipment
- Group 3 - in-flight entertainment (IFE) equipment

These AC load-shed groups can be shed in sequence during AC slow load-shed (SLS) or hydraulic AC motor pump (ACMP) start. They can also be shed all at once for AC fast load-shed (FLS) or APU requested load-shed operation.

A loss of the APU ECU valid signals or loss of communications will result in an automatic APU load-shed.

The BPCUs automatically reset AC load-shedding, based on overcurrent, when the number of AC sources is greater than one.

Copyright © Bombardier Inc.

Table 15: AC Load-Shed Operation

CONDITION	SINGLE SOURCE OPTIONS	SUPPLYING	CURRENT THRESHOLD	SHED GROUP 1 Galley 1 EQPT Galley 3-4 EQPT	SHED GROUP 2 Galley 2 EQPT Galley 4 EQPT Galley Heaters	SHED GROUP 3 Connectivity SAT IFE	OVERCURRENT SHUTDOWN
AC Load-Shedding Slow Load-Shed	VFG 1 VFG 2 APU GEN EXT AC	AC BUS 1 and AC BUS 2	> 230 A < 336 A	After 180 s	After 200 s	After 220 s	300 s
AC Load-Shedding ACMP 3A, ACMP 2B, ACMP 3B Start Request	VFG 1 VFG 2 APU GEN EXT AC	AC BUS 1 and AC BUS 2	> 225 A	After 1 s		Go to either AC Slow Load-Shed or Fast Load-Shed	N/A
AC Load-Shedding Fast Load-Shed	VFG 1 VFG 2 APU GEN EXT AC	AC BUS 1 and AC BUS 2	> 336 A	After 1 s			5 s
AC Load-Shed	APU GEN	AC BUS 1 and/or AC BUS 2	APU ECU Request	Immediate			N/A

CS1_CS3_TB24_005

Copyright © Bombardier Inc.

DC Load-Shedding

There are four DC load-shed groups of non-essential loads that can be shed if necessary when either TRU 1 or TRU 2 is operative. The DC load-shed groups are based on bus assignment and system criticality.

The DC load-shed groups are shed in sequence during TRU slow load-shed or all at once for TRU fast load-shed.

If this does not reduce the current below the threshold, then the TRU overcurrent protection scheme is activated. Refer to DC Power Generation for more details.

Copyright © Bombardier Inc.

Table 16: DC Load-Shed Operation - TRU Slow Load-Shed

SOURCE	CURRENT THRESHOLD	AFTER 30 SECONDS	AFTER 35 SECONDS	AFTER 40 SECONDS	AFTER 45 SECONDS	AFTER 5 MINUTES
TRU 1 with TRU 2 not Available	> 375 A < 525 A	Shed Group 4	Shed Group 5	Shed Group 6	Shed Group 7	Overcurrent Protection
TRU 2 with TRU 1 not Available	> 375 A < 575 A	Shed Group 5	Shed Group 4	Shed Group 7	Shed Group 6	Overcurrent Protection

CS1_CS3_TB24_006

Table 17: DC Load-Shed Operation - TRU Fast Load-Shed

SOURCE	CURRENT THRESHOLD	SHED GROUP	OVERCURRENT PROTECTION
TRU 1 or TRU 2 with Opposite TRU not Available	> 525 A for 8 s	4, 5, 6, 7	Inverse Time Curve

CS1_CS3_TB24_007

Copyright © Bombardier Inc.

DETAILED DESCRIPTION

CONTROL AND DISTRIBUTION CABINET OPERATING MODES

CDC operation is defined by commands performed by the micro-comms LRM. CDC operating modes are as follows:

- Normal mode
- Data-loading mode
- Safe mode
- Fail-safe mode

Normal mode is entered following successful power-up (refer to the Normal Operation section).

Data-loading mode is entered when a data load request is received from the avionics system over the AFDX data bus.

Safe mode is entered when the CDC powers up on the ground and a software configuration problem is detected, or the system cannot determine which aircraft type (CS100 or CS300) it is installed on.

Safe mode is defined by the following conditions:

- SSPC and discrete output control is inhibited
- Neither microprocessor in the CDC is able to become active
- The test link interface is operational, allowing NVM data retrieval
- The AFDX interface is operational allowing data loading, CAS messages, and BITE message retrieval
- BITE is operational

Safe mode requires software reloading. The NVM data or BITE information can be used to determine the problem. The problem could also be caused by a strapping error that must be corrected before system operation is restored.

Fail-safe mode is entered when the microprocessor hardware detects a fault or a communication problem. The microprocessor is held in reset and does not become active. An INFO message of the faulty micro-comms LRM is displayed and can only be reset by a correction of the fault and cycling of the aircraft power.

Copyright © Bombardier Inc.

Table 18: Control and Distribution Cabinet Operating Modes

CDC OPERATING MODES			
Normal Mode	**Data Loading Mode**	**Safe Mode**	**Hardware Fail-Safe Mode**
CDC control of SSPCs and discrete outputs active.	Data load request from avionics system.	Software configuration problem: • SSPC and discrete output control inhibited • Both CDC microprocessors inactive • Test link operational, allows NVM data retrieval • Data loading, CAS messages, and BITE active	Hardware fault requiring fault correction and cold reset.

CS1_CS3_TB24_008

Normal Mode

CDC normal operation can be illustrated using the application of electrical power to the wing anti-ice valves (WAIVs). In the following illustration, an SSPC is used to control the power to WAIVs.

In order to supply bleed air to the wings, the solenoids of the WAIVs are energized with 28 VDC from DC ESS BUS 2. The SOLENOID_CMD (28 V) power is supplied from SSPC 17, in LRM 5, in CDC 2 (CDC 2-5-17). This SSPC is switched on when the utilities software, stored in the microprocessors, detects the parameters necessary to satisfy the operational logic.

The logic to operate the WAIVs is classified as advanced. The CDC will command the wing anti-ice valve SSPC ON when the following conditions are met:

- Integrated air system controller (IASC) 1B or IASC 2B provides a wing anti-ice enable signal (WAI_ENABLE) and either of the following conditions are true:
  - The left or right ice detector provides an ice detected discrete input (L_ICE_DETECTED_3 or R_ICE_DETECTED_3) and the wing anti-ice switch is in the AUTO position (WING_SW_AUTO)
  - The WING anti-ice switch is in the ON position (WING_SW_ON)

When the ice detection signal is removed, the logic waits 2 minutes (delay) before closing the wing anti-ice valves. This ensures that any remaining ice is fully melted prior to closing the WAIVs.

The WAI_ENABLE signal(s) from the IASCs is sent via ARINC 429 to the DMCs, which forwards it to the active microprocessor via an AFDX BUS. The WAI_ENABLE signal is only available when the logic within the IASC(s) is satisfied.

The WING_SW position signals are sent via ARINC 429 to the DMCs, which forwards them to the active microprocessor via an AFDX BUS.

The left and right ice detection signals are provided as discrete inputs to the discrete I/O LRMs in CDC 3 and CDC 4. These inputs are sent via a TTP BUS from the power supply-comms LRMs to the micro-comms LRM in CDC 1 and CDC 2 respectively. The left ice detection signal is then carried over an AFDX BUS to the micro-comms LRM in CDC 2.

When the logic requirements are satisfied, the active microprocessor in CDC 2 commands the SSPC to conduct. The SSPC provides 28 VDC, from DC ESS BUS 2, to supply the wing anti-ice valves. The IASCs monitor the operation of the WAIVs through discrete positions signals.

Copyright © Bombardier Inc.

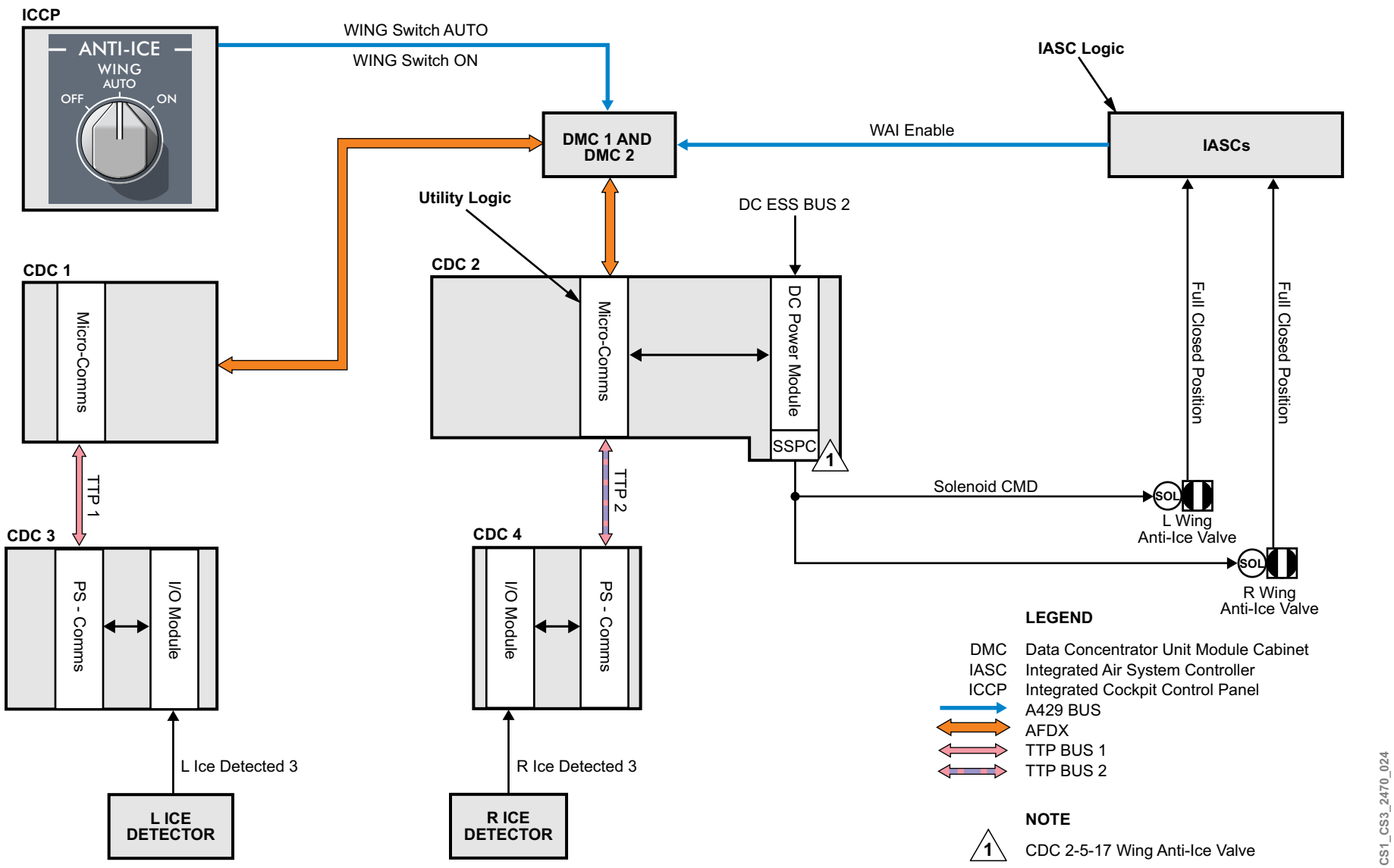

Figure 82: Normal Operation - SSPC - Wing Anti-Ice Example

Copyright © Bombardier Inc.

DATA LOADING

CDC 1 and CDC 2 microprocessors data loading is done through an ARINC 615A-2 protocol from the onboard data loader (ODL). The software upload is enabled when the AIRCRAFT switch on the HMU maintenance panel is set to UPLOAD, and the proper aircraft conditions allow the CDCs to go into software upload operation.

Selecting the CHAN switch to A permits microprocessor 1 of both CDC 1 and CDC 2 to be uploaded at the same time. Selecting the CHAN switch to B permits microprocessor 2 of both CDC 1 and CDC 2 to be uploaded at the same time.

After software is uploaded in the microprocessors, a power cycle is required for the CDCs to implement the newly installed software.

Copyright © Bombardier Inc.

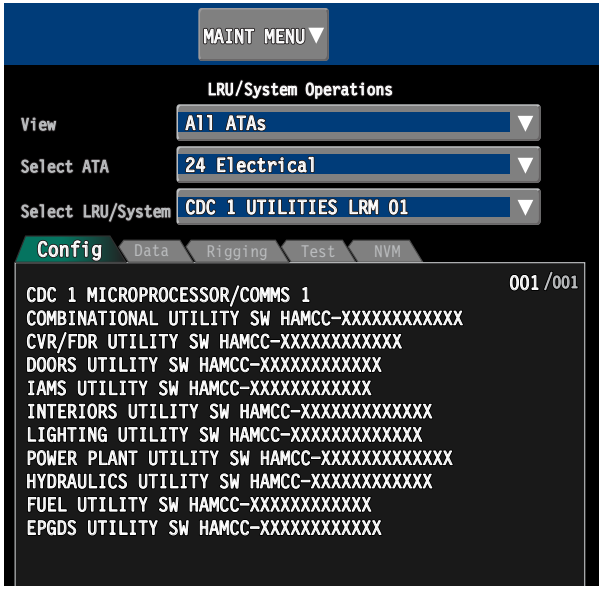

MAINTENANCE PAGE

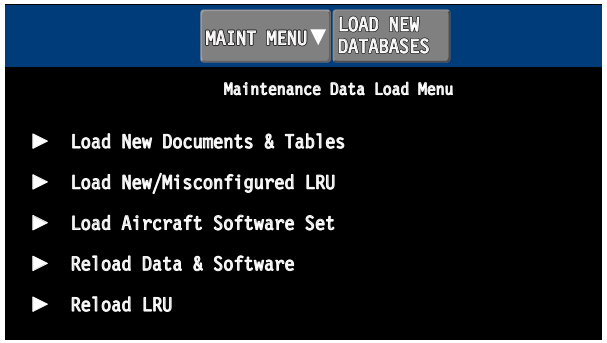

OMS DATA LOAD PAGE

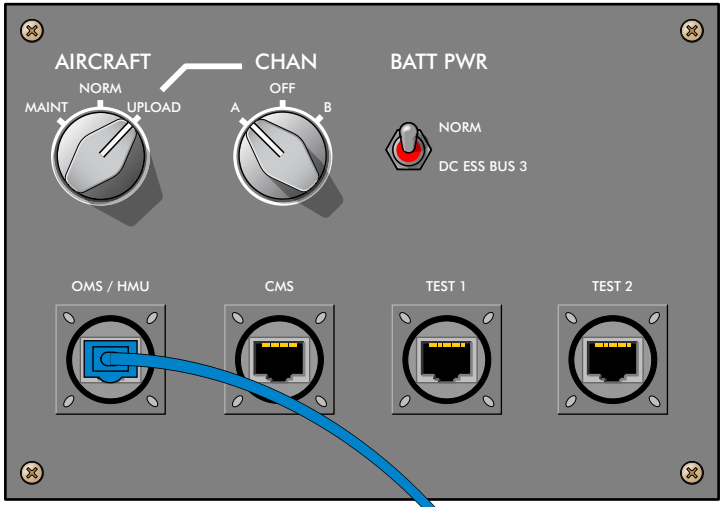

HMU MAINTENANCE PANEL

MAINTENANCE LAPTOP

CS1_CS3_2470_026

Figure 83: Control and Distribution Cabinet Software Loading

Copyright © Bombardier Inc.

MONITORING AND TESTS

The following page provides the crew alerting system (CAS) and INFO messages for the secondary power distribution system.

CAS MESSAGES

Table 19: ADVISORY Message

MESSAGE	LOGIC
ELECTRICAL FAULT	Loss of redundant or noncritical function for the electrical system (refer to INFO messages).

Table 20: INFO Messages

MESSAGE	LOGIC
24 ELECTRICAL FAULT - CDC 1 MICRO 1 MODULE 1 INOP	CDC 1 microprocessor channel 1, LRM 1 failure.
24 ELECTRICAL FAULT - CDC 1 MICRO 2 MODULE 4 INOP	CDC 1 microprocessor channel 2, LRM 4 failure.
24 ELECTRICAL FAULT - CDC 1 PWR SUPPLY MODULE 2 INOP	CDC 1 satellite repeater power supply module 2 failure.
24 ELECTRICAL FAULT - CDC 1 PWR SUPPLY MODULE 3 INOP	CDC 1 satellite repeater power supply module 3 failure.
24 ELECTRICAL FAULT - CDC 2 MICRO 1 MODULE 1 INOP	CDC 2 microprocessor channel 1, LRM 1 failure.
24 ELECTRICAL FAULT - CDC 2 MICRO 2 MODULE 4 INOP	CDC 2 microprocessor channel 2, LRM 4 failure.
24 ELECTRICAL FAULT - CDC 2 PWR SUPPLY MODULE 2 INOP	CDC 2 satellite repeater power supply module 2 failure.

Table 20: INFO Messages

MESSAGE	LOGIC
24 ELECTRICAL FAULT - CDC 2 PWR SUPPLY MODULE 3 INOP	CDC 2 satellite repeater power supply module 3 failure.
24 ELECTRICAL FAULT - CDC 3 PWR SUPPLY MODULE 1 INOP	CDC 3 satellite repeater power supply module 1 failure.
24 ELECTRICAL FAULT - CDC 3 PWR SUPPLY MODULE 2 INOP	CDC 3 satellite repeater power supply module 2 failure.
24 ELECTRICAL FAULT - CDC 4 PWR SUPPLY MODULE 1 INOP	CDC 4 satellite repeater power supply module 1 failure.
24 ELECTRICAL FAULT - CDC 4 PWR SUPPLY MODULE 2 INOP	CDC 4 satellite repeater power supply module 2 failure.
24 ELECTRICAL FAULT - CDC 5 PWR SUPPLY MODULE 1 INOP	CDC 5 satellite repeater power supply module 1 failure.
24 ELECTRICAL FAULT - CDC 5 PWR SUPPLY MODULE 2 INOP	CDC 5 satellite repeater power supply module 2 failure.
24 ELECTRICAL FAULT - EPDS COM REDUND LOSS	Loss of redundant communication for any EPDS TTP end-system.
24 ELECTRICAL FAULT - EPGS COM REDUND LOSS	Loss of redundant communication for any EPGS TTP end system.
24 ELECTRICAL FAULT - CAN COM REDUND LOSS	Loss of redundant communication for any CAN end-system.
24 ELECTRICAL FAULT - CDC AFDX COM REDUND LOSS	Loss of redundant communication for any AFDX end-system.

Copyright © Bombardier Inc.

Page Intentionally Left Blank

Table 20: INFO Messages

MESSAGE	LOGIC
24 ELECTRICAL FAULT - EMPC COM LOSS	Loss of communication with the EMPC end system.
24 ELECTRICAL FAULT - CDC PWR MODULE INOP	CDC power module failure.
24 ELECTRICAL FAULT - CDC SSPC FAIL OPEN	SSPC failed open.
24 ELECTRICAL FAULT - CDC DISCRETE MODULE INOP	CDC discrete module failure.

Copyright © Bombardier Inc.

PRACTICAL ASPECTS

CONTROL AND DISTRIBUTION CABINET MAINTENANCE

The CDC LRMs are designed for easy removal and installation. The LRMs are held in place with lever mechanisms that lock the LRM in position once it is installed correctly.

The LRMs are keyed to ensure they cannot be installed in the wrong positions.

Each CDC has a safety ground stud on each end of the cabinet, which must be connected to an aircraft ground.

An electrostatic discharge sensitive wrist strap must be worn when performing maintenance on the CDC or replacing LRMs. The wrist strap is plugged into an ESD jack installed on the CDC frame.

Copyright © Bombardier Inc.

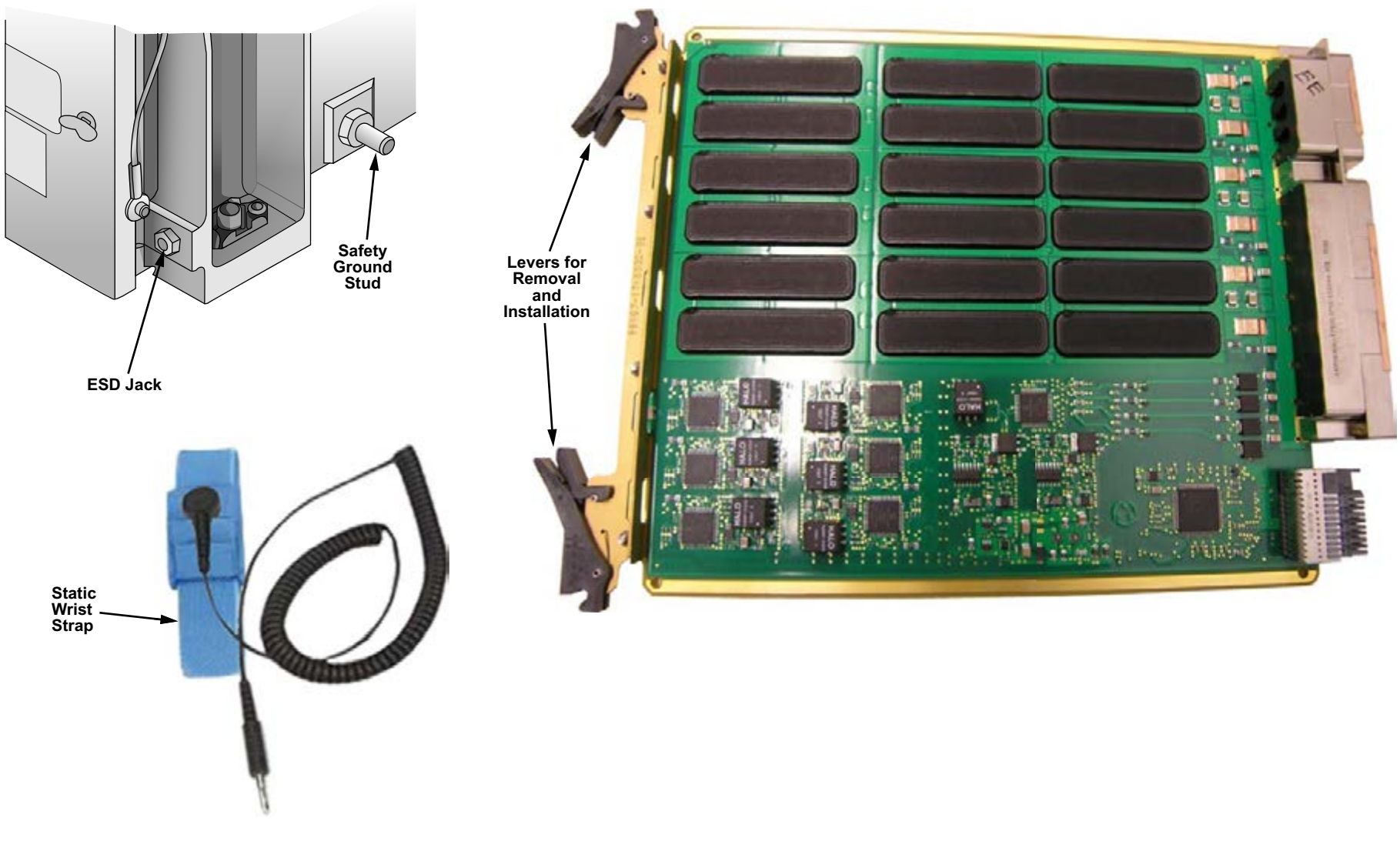

Figure 84: Control and Distribution Cabinet Maintenance

Copyright © Bombardier Inc.
CS130-21.02-06.00-121418

24-70 CIRCUIT BREAKER APPLICATION

GENERAL DESCRIPTION

The circuit breaker (CB) application is contained within the microprocessor-comms LRMs within the master CDCs (CDC 1 and CDC 2). Each microprocessor-comms LRM communicates with the flight deck display units over the AFDX BUSES.

The CB application allows monitoring and control of solid-state power controller circuit breaker (SSPC-CB) functions using graphical user interface (GUI) components on a flight deck display unit.

The CB application monitors all CBs on board the aircraft. The circuit breaker panels are located in the flight deck, as well as the forward and mid equipment bays. The FBWPC CPDs and fuses are in the mid equipment bay. The circuit breakers in the equipment bays are not accessible in flight.

The CB application is displayed on the CB page in normal mode.

The normal mode allows the following actions:

- View FUSE, TCBs, FBWPC CPDs or SSPC-CBs states, location, and rating
- Acknowledge TRIP FUSE, TCBs or SSPC-CBs
- Select IN (SSPC-CB only)
- Select OUT (SSPC-CB only)

A CB TRIP advisory CAS message is displayed each time a new CB trip (SSPC-CB, FBWPC-CPD, TCB, or fuse) occurs. The CAS message is removed when all tripped CBs have been acknowledged or corrected.

The CB application periodically checks for changes in the CB states. When a change occurs in the list being displayed, the Re-sort soft key becomes active, allowing the list to be updated.The soft key is grayed out when the list is up-to-date.

Copyright © Bombardier Inc.

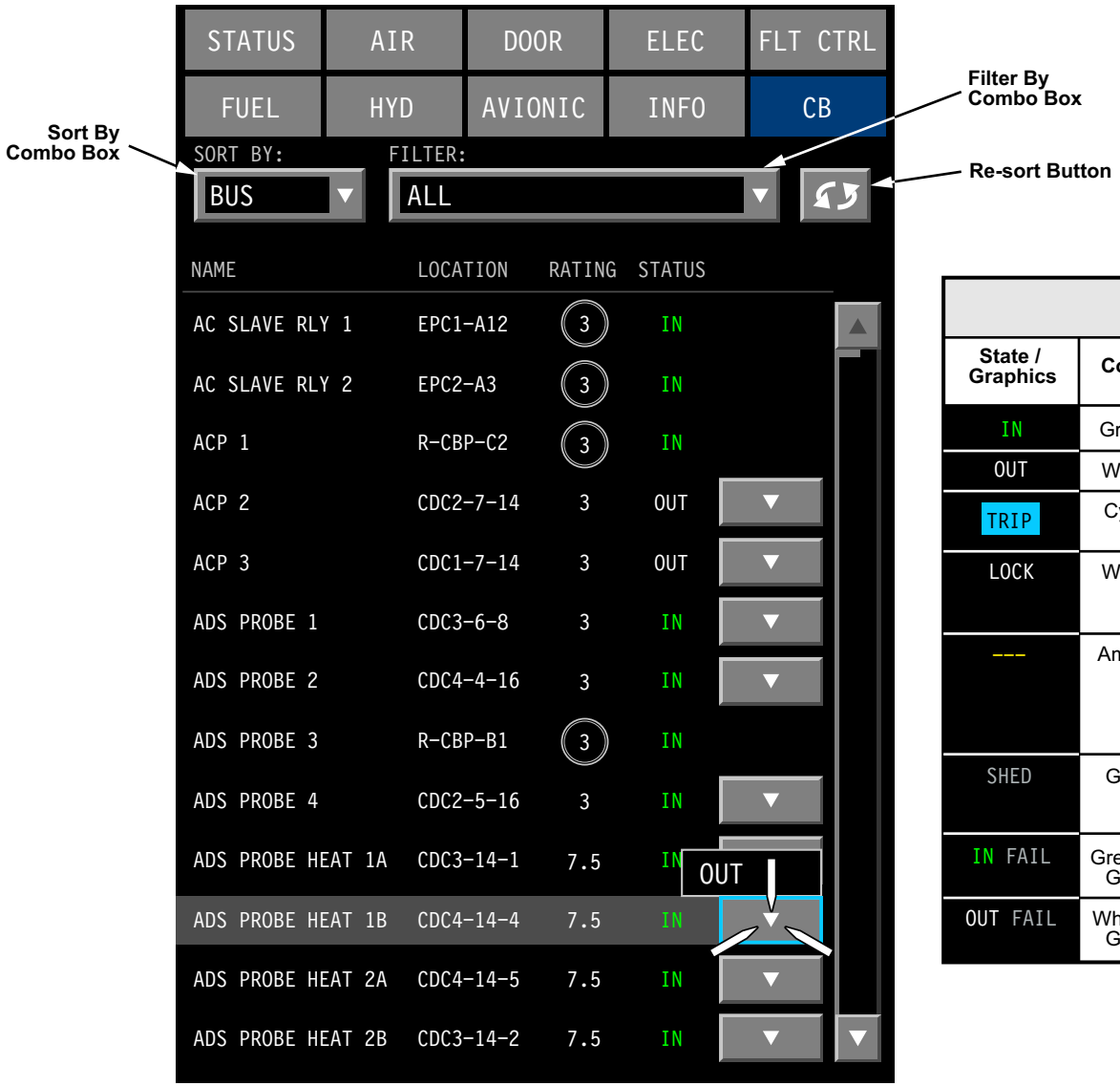

CIRCUIT BREAKER STATES

State / Graphics	Color	Description	SSPC -CB	TCB	FBWPC -CPD	Fuse
IN	Green	Breaker is in	X	X	X	X
OUT	White	Breaker is out	X	X	X	X
TRIP	Cyan	Breaker is tripped	X	X	X	X
LOCK	White	Breaker is locked. Similar to CB collar	X			
---	Amber	Breaker state is unknown (except for maintenance mode)	X	X	X	X
SHED	Gray	SSPC-CB automatically shed	X			
IN FAIL	Green - Gray	Circuit breaker failed in	X			
OUT FAIL	White - Gray	Circuit breaker failed out	X			

CS1_CS3_2470_016

Figure 85: Circuit Breaker Application

Copyright © Bombardier Inc.

OPERATION

MAINTENANCE MODE

The electrical maintenance mode is used to set an SSPC to the IN, OUT, or LOCK state prior to performing any maintenance of the aircraft systems.

The electrical maintenance mode may only be entered when the aircraft is on the ground. The electrical maintenance mode is configured using switches on the HMU maintenance panel, located on the flight deck aft bulkhead. To enter the electrical maintenance mode, the BATT PWR switch on the HMU maintenance panel must be selected to DC ESS BUS 3, and the BATT 1 and BATT 2 switches are selected to the OFF position. In this mode, SSRPC 3 is triggered to power the DC ESS BUS 3.

The electrical maintenance mode has a higher priority over the ground service mode (refer to the External Power operation section). If the ground service power is selected, with the aircraft power configuration set to electrical maintenance mode and external AC power available, the bus power control unit (BPCU) ignores the request and keeps the aircraft in electrical maintenance mode.

If the BATT PWR switch on the HMU maintenance panel is selected to DC ESS BUS 3, and the aircraft power configuration is in ground service mode with both battery switches set to OFF, the BPCU will exit the ground service mode, unpower AC BUS 1 and DC BUS 1, and will set the aircraft to the electrical maintenance mode.

In electrical maintenance mode, CDC 1 and CDC 2 do not communicate with any of their SSPCs, but display all SSPC CB statuses as valid on the circuit breaker (CB) page. When an SSPC is set to IN, OUT, or LOCKED from the CB page, the CDC stores the command in the NVM. On subsequent aircraft power-up or when the power of the CDC control power is active, the micro-comms card communicates with the SSPCs and commands the SSPC CBs according to the status stored in the NVM as commanded from the CB page.

The BATT PWR switch on the HMU maintenance panel is connected to the CDC 3 discrete I/O module to detect the switch position. When the BATT PWR switch is selected to DC ESS 3, the BATT PWR CONFIG status CAS message is displayed on the EICAS.

NOTE

1. If the ground service mode is selected while in electrical maintenance mode, the request will be ignored by the BPCU. The ground service mode must be reselected after the maintenance mode is exited.
2. Do not leave the BATT PWR switch in the DC ESS BUS 3 position for long periods of time. The aircraft batteries can discharge.
3. When the BATT PWR switch is set to DC ESS BUS 3, display unit (DU) 2 turns on.

Copyright © Bombardier Inc.

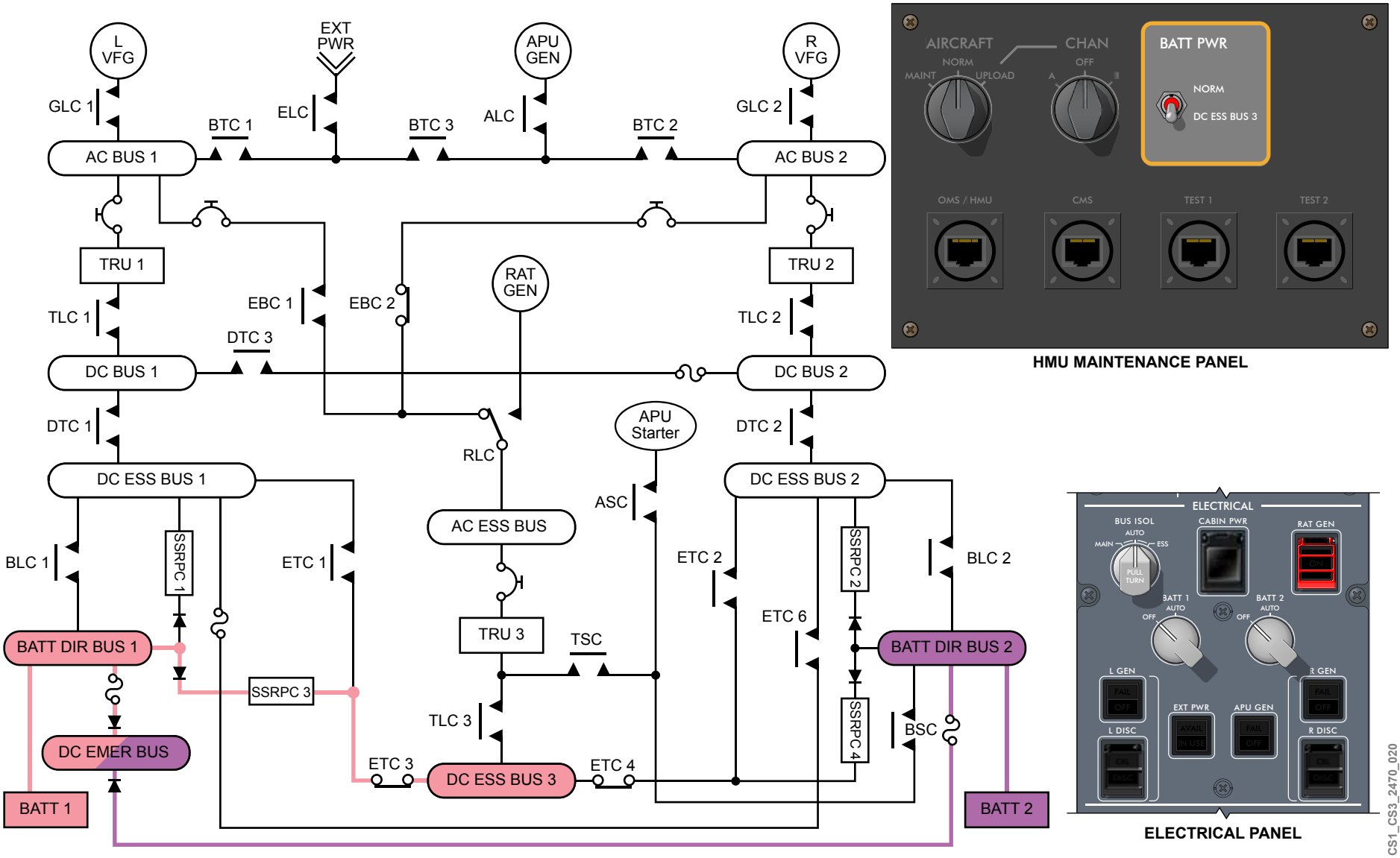

Figure 86: Maintenance Mode Operation

FILTERING AND SORTING

The circuit breaker (CB) application enables sorting and filtering of the various circuit protective devices to quickly locate and identify a particular CPD.

Sorting is possible using the following attributes:

- Status (CB state)
- Bus (source electrical bus)
- System (ATA chapter)
- Location (LRU containing the CB)

The default sort criteria is STATUS. This criteria is displayed first on power-up or when a CB TRIP advisory message is displayed.

Each of these sort categories also has a default. Subcategories are indented to indicate they are subcategories of the default category.

Once sorted, each category can be filtered to display only the results of a specific criteria.

When sorting by STATUS and filtering by OFFLINE, the CB application displays the CBs in the following order:

- TRIP
- OUT
- LOCK
- SHED
- INVALID

Each of the above groups is then automatically sub-sorted by reverse chronology, which means that the most recent change of state will be displayed at the top and the oldest at the bottom.

When sorting by STATUS and filtering by TRIP, OUT, LOCK, SHED, or INVALID, the CB application displays CBs whose state matches the filter selection. Each group is displayed in reverse chronological order.

When sorting by BUS, LOCATION, or SYSTEM, the CB application displays the CBs in ascending alphabetical order by their CB name.

Copyright © Bombardier Inc.

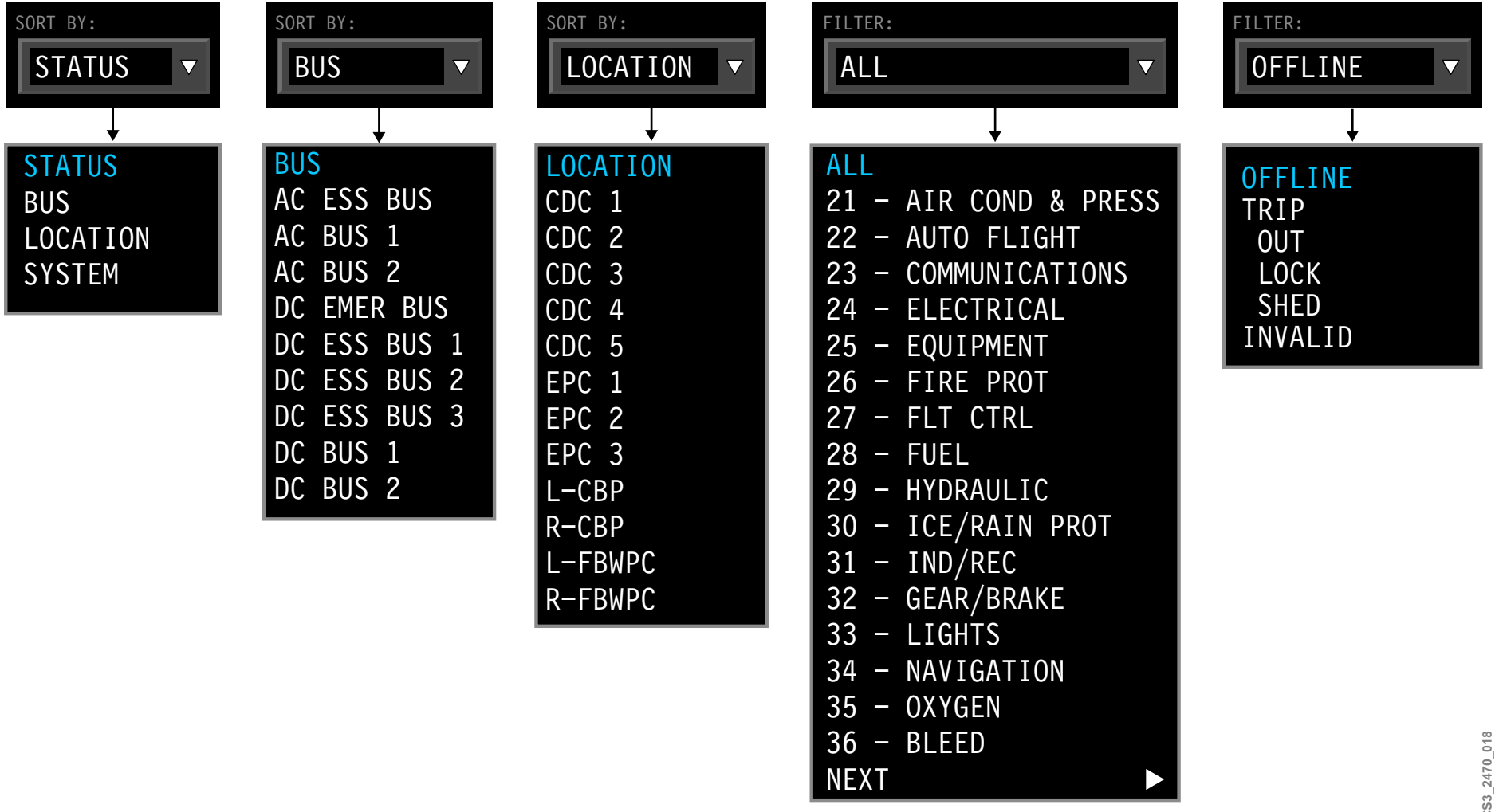

Figure 87: Circuit Breaker Application Sort and Filter Control

CIRCUIT BREAKER APPLICATION SELECTIONS

The following illustrations display the possible interactions of the selections on the CB application.

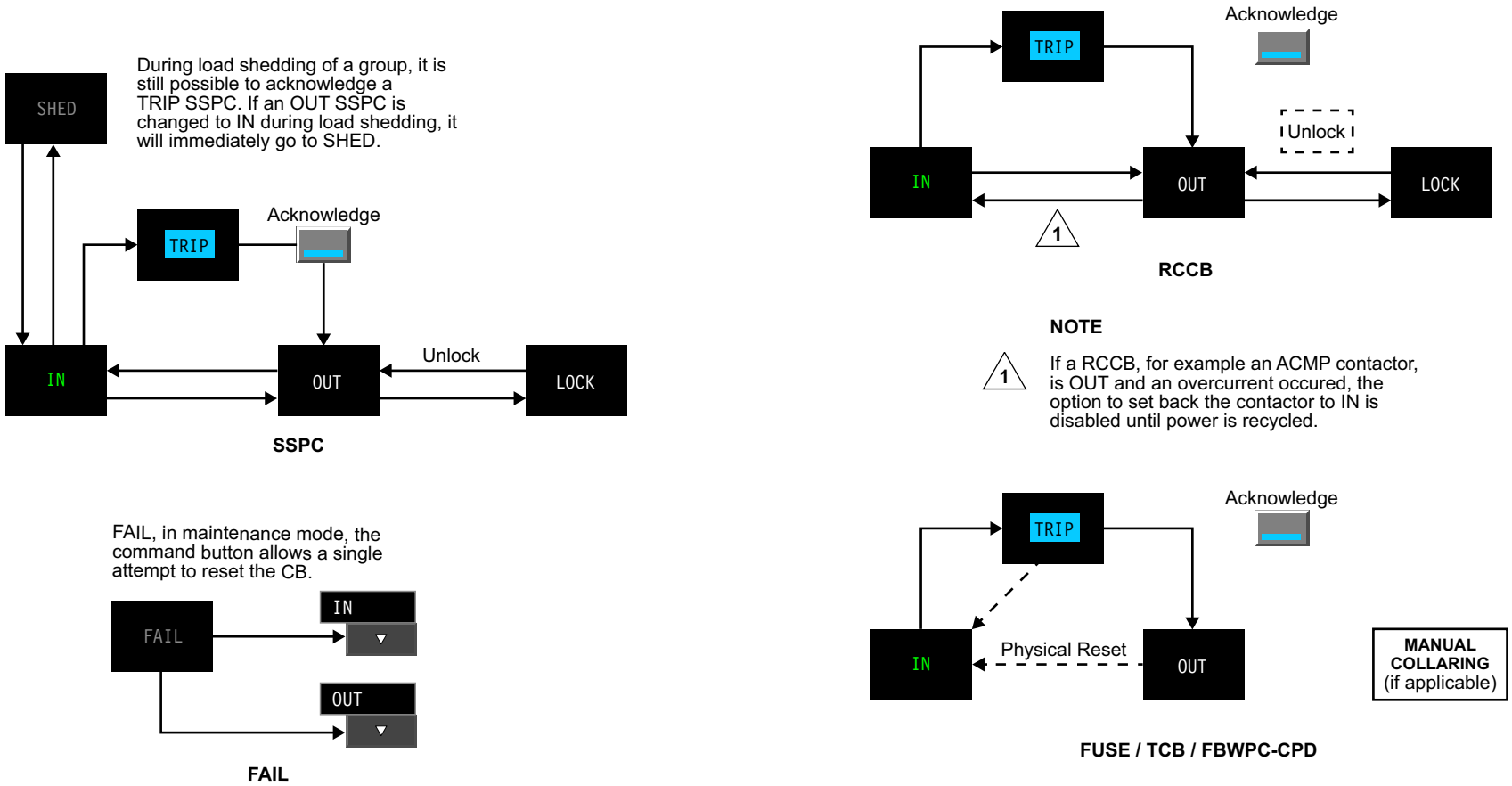

LEGEND

CPD	Circuit Protective Device
FBWPC	Fly-By-Wire Power Controller
RCCB	Remote Control Circuit Breaker
SSPC	Solid-State Power Controller
TCB	Thermal Circuit Breaker

CS1_CS3_2470_017

Figure 88: Circuit Breaker Application Selection Navigation

DETAILED DESCRIPTION

CIRCUIT BREAKER PANEL

Thermal CBs on the EPCs provide the DC and AC feeds to the circuit breaker panels (CBPs). DC ESS BUS 3 feeds both CBPs. The AC ESS BUS feeds the left CBP only. In addition, the right CBP has provisions to accommodate additional AC or DC BUS connections.

Power from these buses is distributed to member system loads via AC and DC circuit breakers of various ratings and phases. Each feed includes a thermal circuit breaker to protect the aircraft wiring from faults and electrical overloads. The CB trip status monitor (TSM) LRM allows for automated trip status monitoring. The circuitry on the CB TSM scans all the CB locations of the CBP to determine the trip status of each circuit breaker.

The CB TSM reporting function communicates the trip status to the master CDCs over two CAN BUSES. The left CBP status messages are transmitted via the CAN BUS to CDC 1. The right CBP status messages are transmitted via the CAN BUS to CDC 2. The master CDCs report this status information to the EICAS and the aircraft health management system (AHMS).

Copyright © Bombardier Inc.

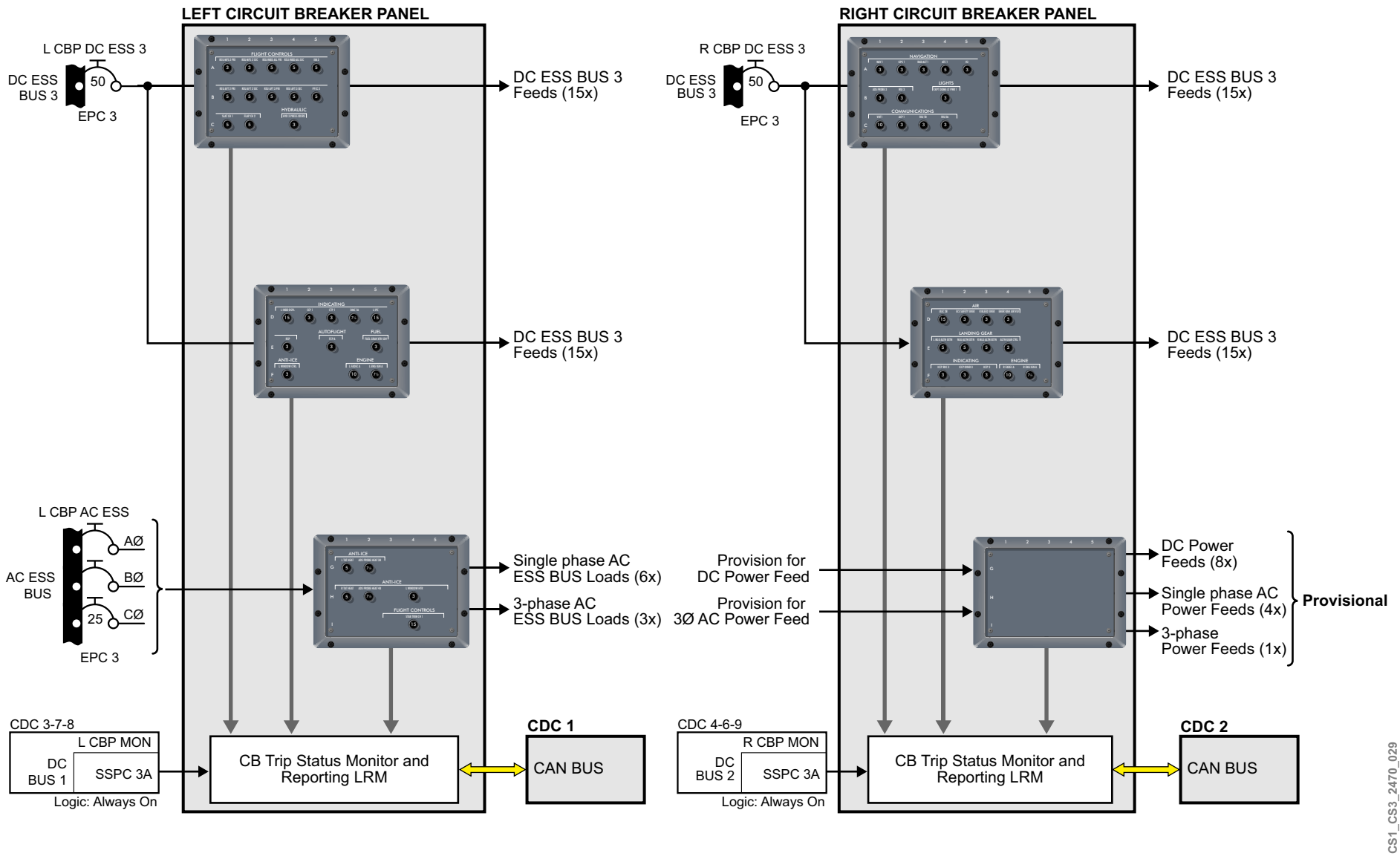

Figure 89: Circuit Breaker Panel Electrical Schematics

MONITORING AND TESTS

The following page provides the crew alerting system (CAS) and INFO messages for the circuit breaker application.

Copyright © Bombardier Inc.

CAS MESSAGES

Table 21: ADVISORY Messages

MESSAGE	LOGIC
CB TRIP	A thermal CB trip, SSPC trip or fuse is open and has not been acknowledged. Note: This message is removed then displayed again whenever a new trip happens in order to send the message to the top of the screen.
ELECTRICAL FAULT	Loss of redundant or non-critical function for the electrical system (refer to INFO messages).

Table 22: STATUS Message

MESSAGE	LOGIC
BATT PWR CONFIG	BATT PWR switch on HMU maintenance panel set to DC ESS BUS 3.

Table 23: INFO Messages

MESSAGE	LOGIC
24 ELECTRICAL FAULT - L CB PANEL DEGRADED	Left circuit breaker panel minor fault.
24 ELECTRICAL FAULT - R CB PANEL DEGRADED	Right circuit breaker panel minor fault.
24 ELECTRICAL FAULT - CBP INOP	A circuit breaker panel has an interface fault.

Copyright © Bombardier Inc.

PRACTICAL ASPECTS

CIRCUIT BREAKER PANEL MAINTENANCE

For ease of maintenance and quick accessibility, each circuit breaker panel (CBP) consists of multiple modules.

Each module face plate is illuminated and held in place with four fasteners to allow easy access to the circuit breaker. Each of the CBs can be easily unplugged and replaced.

Copyright © Bombardier Inc.

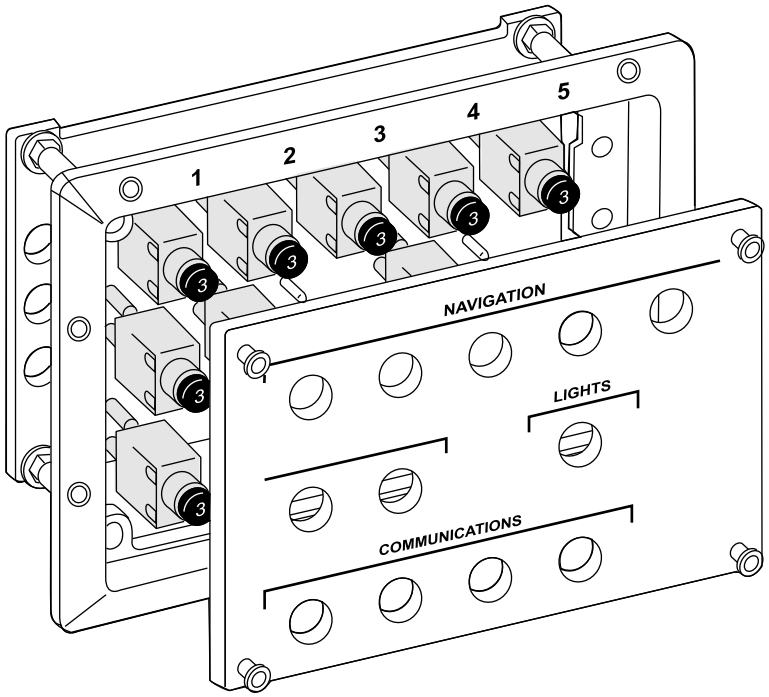

Each face plate is easily removable
and is held to the module by four screws.

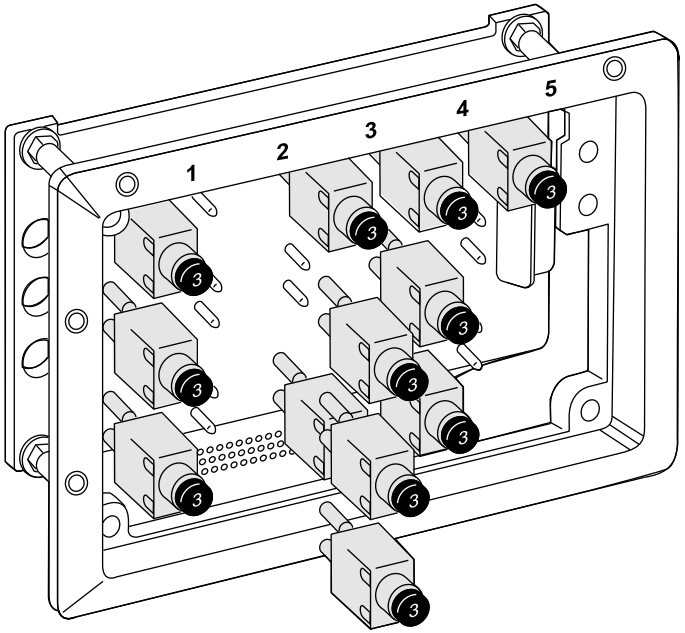

Removal of face plate exposes the
plug and play patented circuit breaker design.

CS1_CS3_2470_030

Figure 90: Circuit Breaker Replacement

24-20 ELECTRICAL EMERGENCY GENERATION SYSTEM

GENERAL DESCRIPTION

A ram air turbine (RAT) provides emergency electrical and hydraulic power.

The RAT is a self-contained system that uses ram air force to drive a 10 kVA AC generator and a hydraulic pump. The hydraulic pump supplies pressure to hydraulic system no. 3.

The RAT can be deployed automatically in flight or manually upon selection of a switch in the flight deck.

A spring-loaded actuator deploys the RAT into the airstream when it receives an electrical deploy command. This actuator is also used to hydraulically stow the RAT when on the ground. To stow the RAT, an electric switch, accessible in the wing-to-body fairing (WTBF), is used to control hydraulic system no. 3 pressure to the actuator.

The RAT generator supplies the AC ESS BUS in EPC 3 when operating. A RAT generator control (RGC) provides control and protective functions for the generator. The emergency power control (EMPC), in conjunction with the RGC, controls deployment of the RAT and the application of power to the AC ESS BUS.

Copyright © Bombardier Inc.

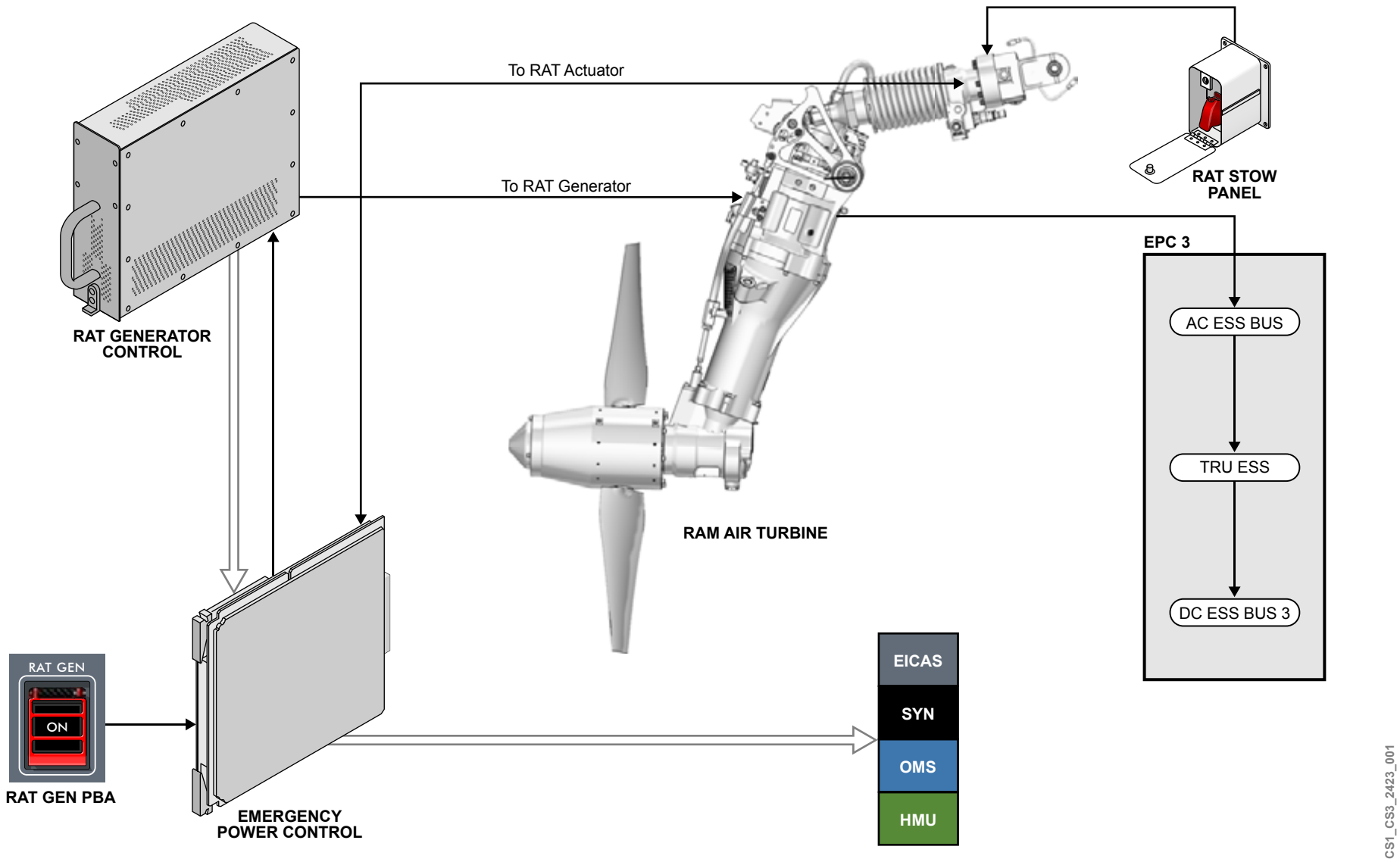

Figure 91: Electrical Emergency Generation System

COMPONENT LOCATION

The electrical emergency generation system consists of the following components:

- Ram air turbine assembly
- RAT deployment actuator
- Stow panel
- RAT generator control (Refer to figure 93)
- Emergency power control (Refer to figure 93)

RAM AIR TURBINE ASSEMBLY

The ram air turbine (RAT) assembly is mounted under the center fuselage in the wing-to-body fairing (WTBF). It is attached to the aircraft structure via a pivot shaft on the generator housing.

RAT DEPLOYMENT ACTUATOR

The deployment actuator is connected at one end to the aircraft structure and at the other end to the RAT assembly.

STOW PANEL

The stow panel is located in the WTBF.

Copyright © Bombardier Inc.

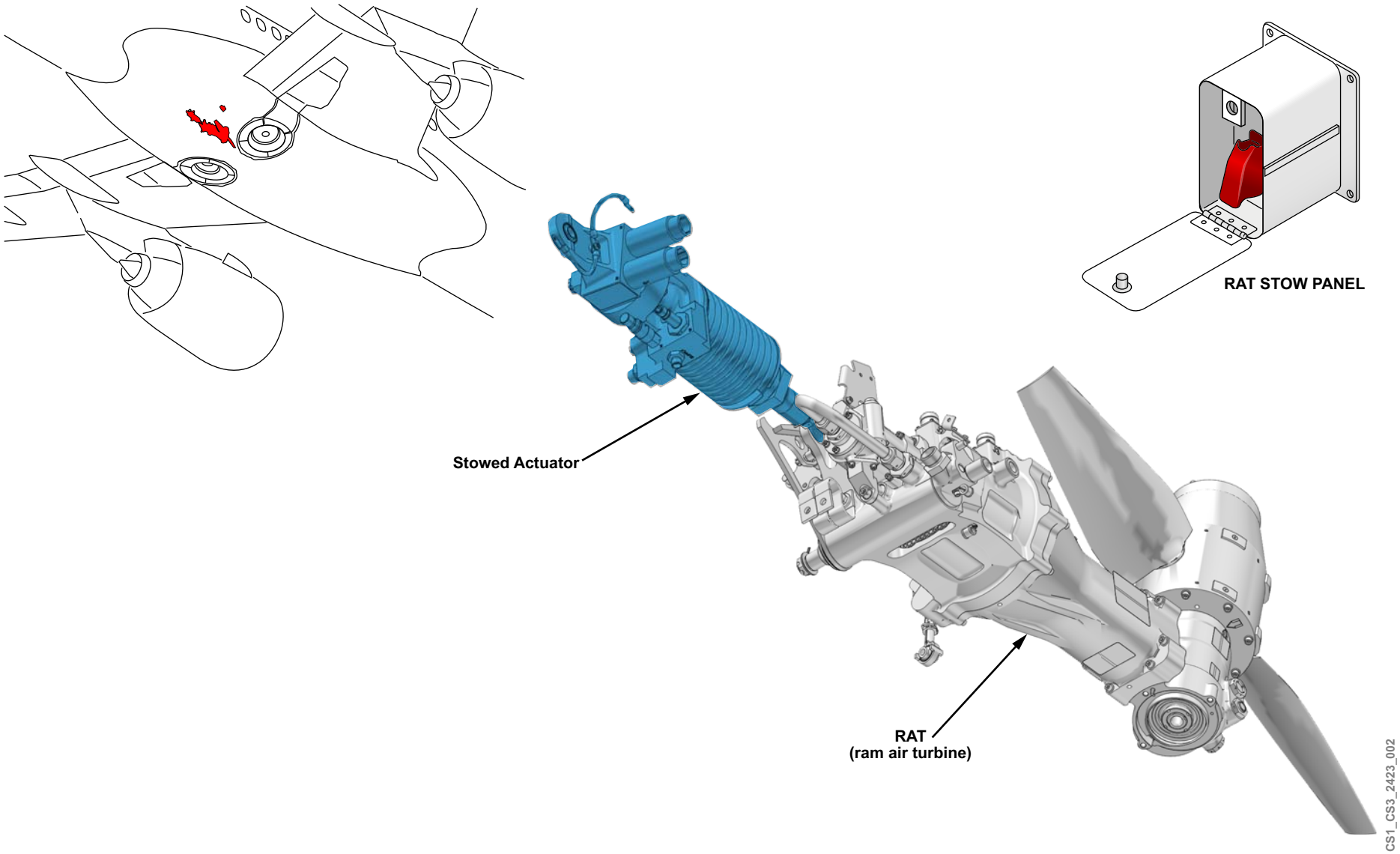

Figure 92: Ram Air Turbine System, Deployment Actuator, and Stow Panel

Copyright © Bombardier Inc.

RAT GENERATOR CONTROL

The RAT generator control (RGC) is located in EPC 3, in the forward equipment bay.

EMERGENCY POWER CONTROL

The emergency power control (EMPC) is located within EPC 3.

Copyright © Bombardier Inc.

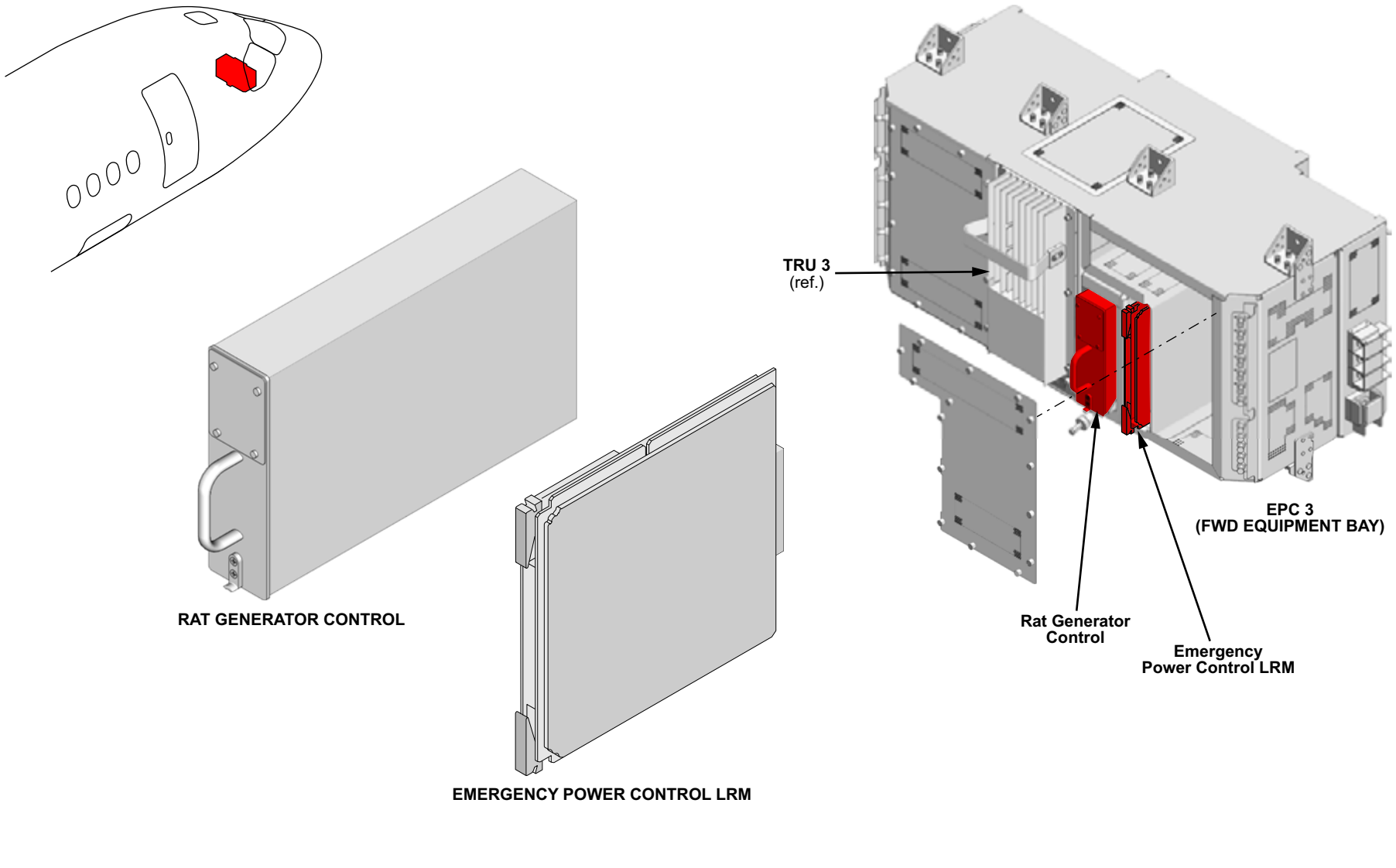

Figure 93: RAT Generator Control and Emergency Power Control

Copyright © Bombardier Inc.

DETAILED COMPONENT INFORMATION

RAM AIR TURBINE ASSEMBLY

The RAT assembly consists of a two-bladed, 87.6 cm (34.5 in.) diameter turbine, mounted to a lower bevel gearbox assembly. The governor within the turbine assembly maintains the turbine rotational speed between 4600 rpm and 6500 rpm.

A hydraulic pump and generator are located at the top of the RAT strut. The strut connects the gearbox housing to the generator housing. A drive shaft located inside the strut couples the gearbox output to the generator input spline.

Copyright © Bombardier Inc.

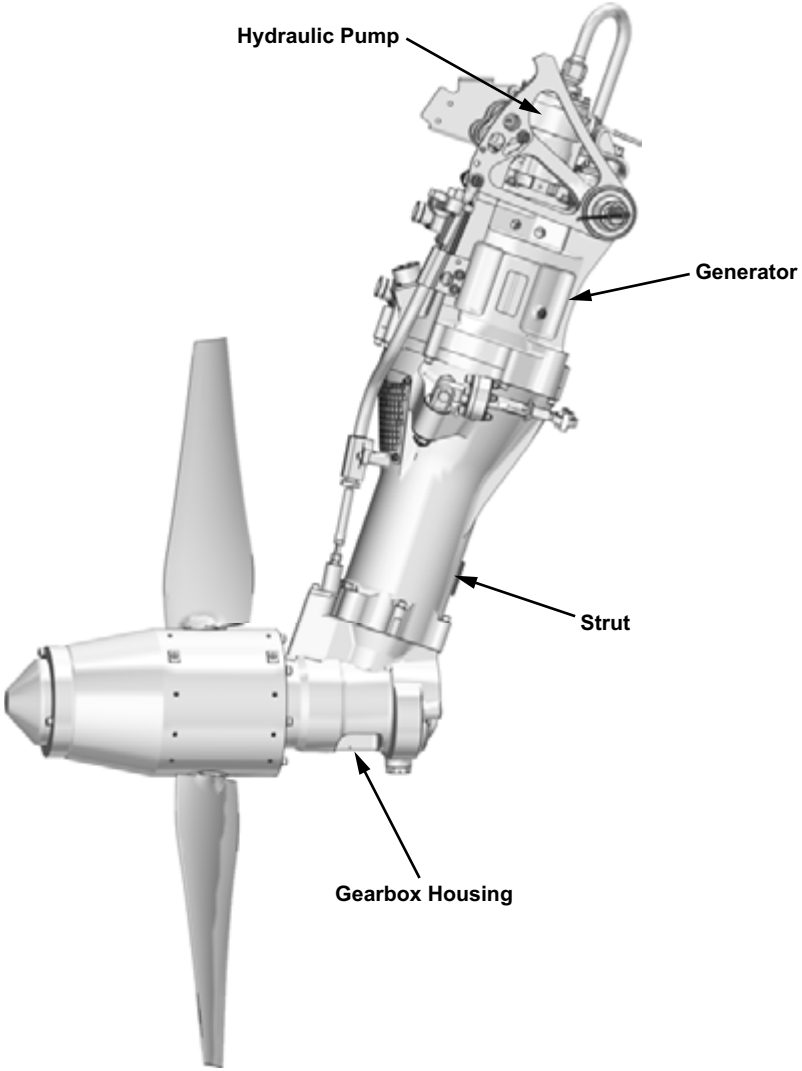

CS1_CS3_2423_024

Figure 94: Ram Air Turbine Assembly

DEPLOYMENT ACTUATOR

The deployment actuator is connected at one end to the aircraft structure. The other end is connected to the RAT assembly. When the actuator internal lock is released, the deploy spring extends the actuator deploying the RAT into the airstream. The spring provides 91 kg (200 lb) of deployment force.

The deployment actuator contains internal mechanical locks that operate when the unit is fully extended (downlock) or retracted (uplock). The actuator internal downlock prevents the actuator from rebound and from causing damage to the skin of the aircraft during landing or negative-G conditions.

The actuator is released for extension (deployment) using two functionally independent solenoids installed in parallel on the actuator. One solenoid is used for automatic deployment, the other solenoid is used for manual deployment. When either of these solenoids is energized, the actuator unlocks, allowing the deploy spring to extend the RAT into the airstream.

A pressure switch monitors pressure within the deploy actuator. The switch is normally closed. It will open on an increasing pressure of 363 psi, and reset at a decreasing pressure of 263 psi. The EMPC provides a signal to the engine indication and crew alerting system (EICAS). An INFO message is displayed when high pressure is in the deploy actuator and the actuator is in the stowed or deployed position. High pressure in the RAT deploy actuator could prevent the RAT from being deployed.

When the stow switch is selected to the STOW position, 28 VDC from DC BUS 2 is supplied to the stow solenoid. The stow solenoid supplies pressure to operate the control valve. The control valve supplies hydraulic pressure to the stow side of the actuator piston, causing the actuator to retract until the internal locks engage.

Releasing the stow switch de-energizes the stow solenoid. With no pressure available, the control valve returns to the normal position, removing pressure from the actuator.

Copyright © Bombardier Inc.

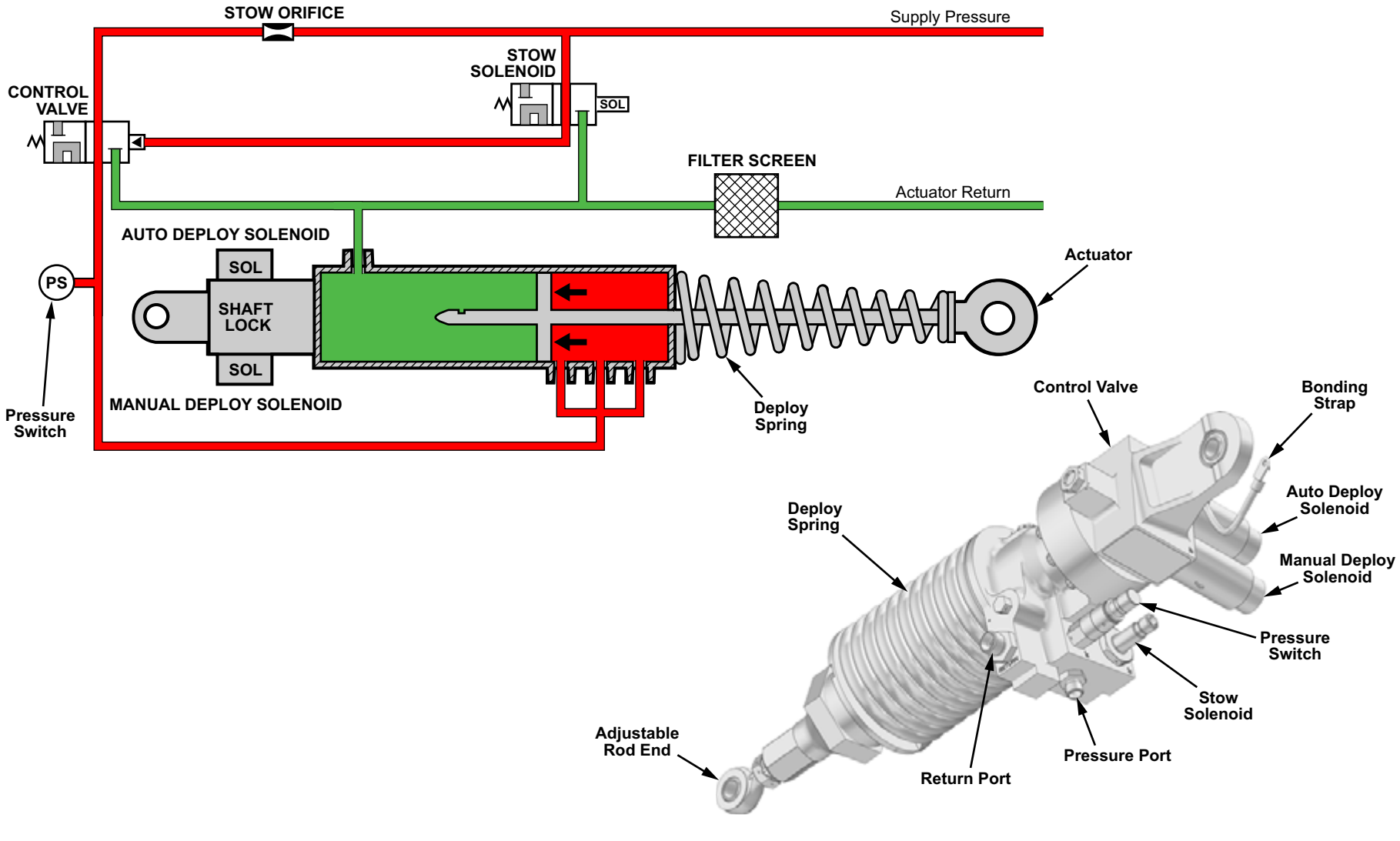

Figure 95: RAT Deployment Actuator

RAT BLADE RELEASE

During deployment from the stowed position, the stow abort bracket and turbine release cable move together until 56.4° of movement. At this angle, the stow abort bracket makes contact with a fixed pin attached to the aircraft structure. Contact with the fixed pin arrests the movement of the turbine release cable pulling up on the plunger. The plunger is fully released when the RAT is fully extended (67.6°).

A proximity sensor, mounted on the RAT generator housing, monitors the position of the stow abort bracket and provides an indication of RAT deployment on the EICAS.

Copyright © Bombardier Inc.

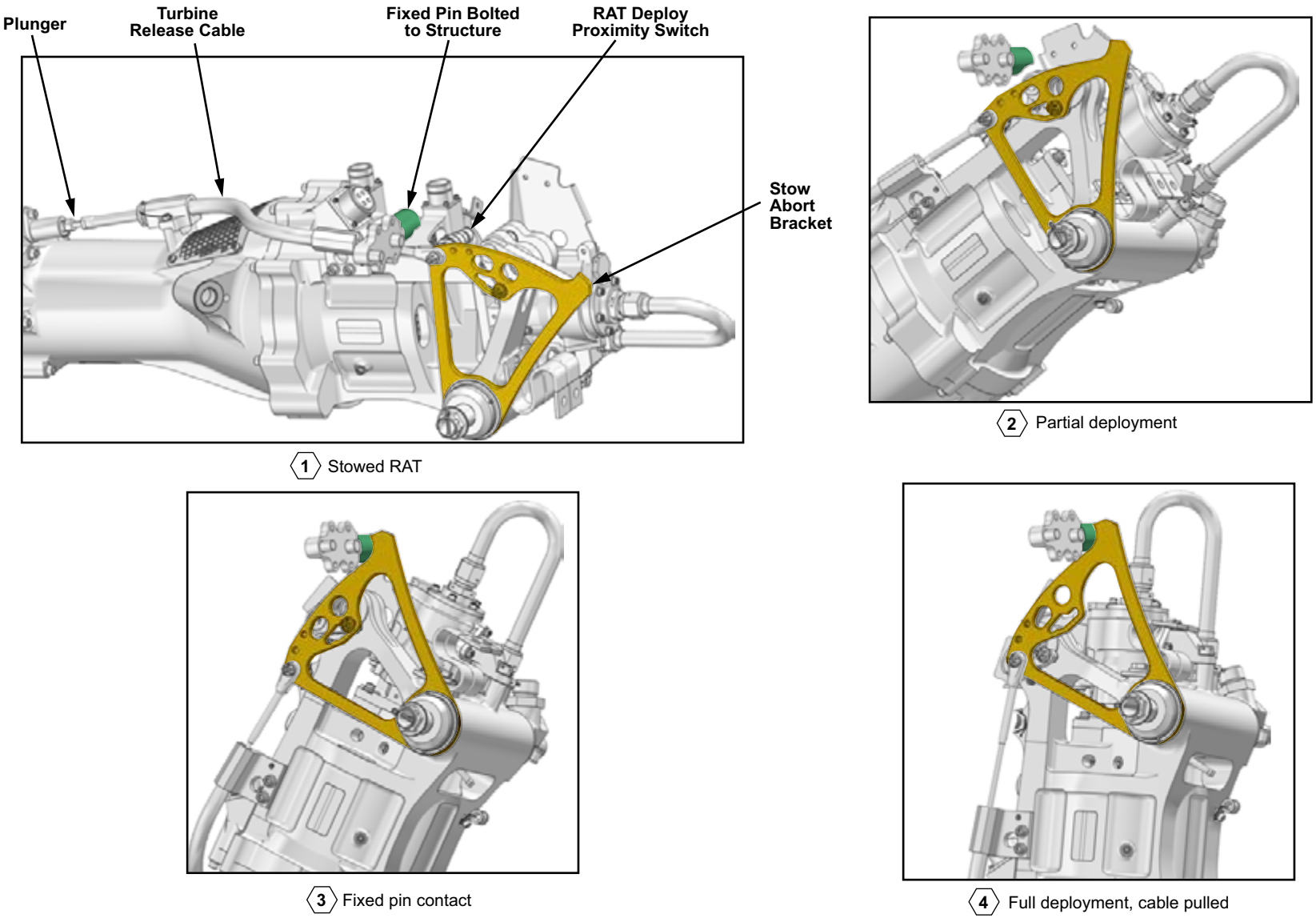

Figure 96: RAT Blade Release

RAT BLADE LOCKING

RAT Locking Plunger

A spring-loaded locking plunger locks the turbine drive shaft to prevent rotation. This ensures that no structure is contacted by the blades until the RAT is in the fully deployed position. When the plunger is pulled upward, by the release cable, the turbine is free to rotate.

Copyright © Bombardier Inc.

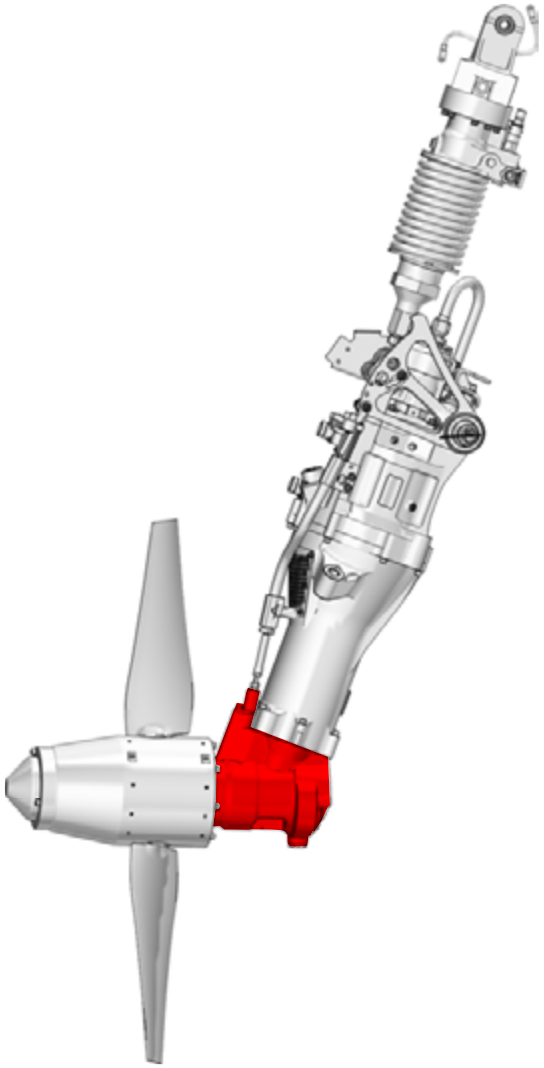

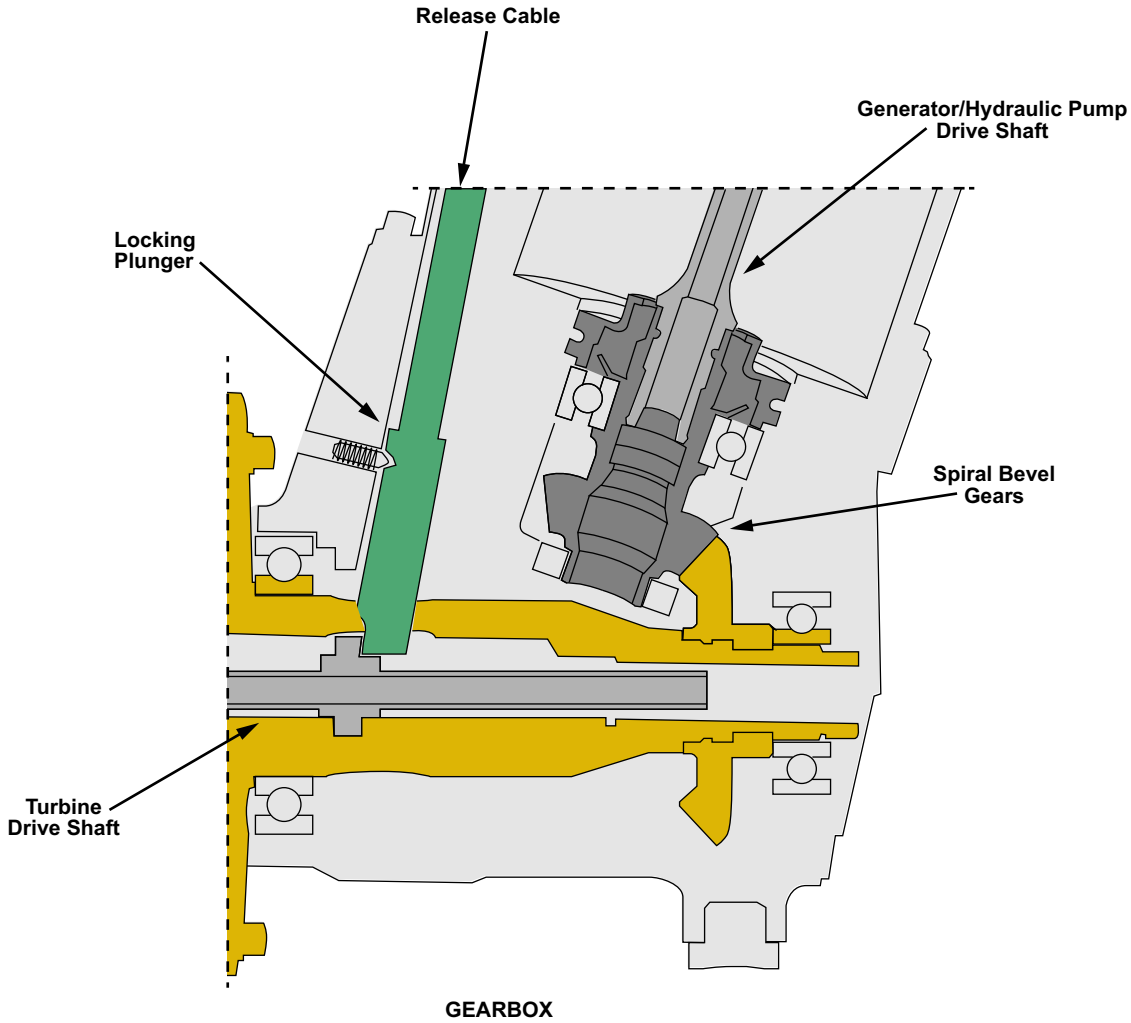

CS1_CS3_2423_006

Figure 97: RAT Locking Plunger

RAT STOW ABORT FUNCTION

The stow abort function prevents stowing of the RAT if the blades are not properly aligned. In the event that the blades are misaligned, the turbine locking plunger will not seat in the turbine drive shaft hole.

In addition, the high plunger position causes the stow abort pawl, connected to the generator, to contact the fixed pin. This contact prevents the RAT from retracting further than 5 to 8° from the fully deployed position.

Copyright © Bombardier Inc.

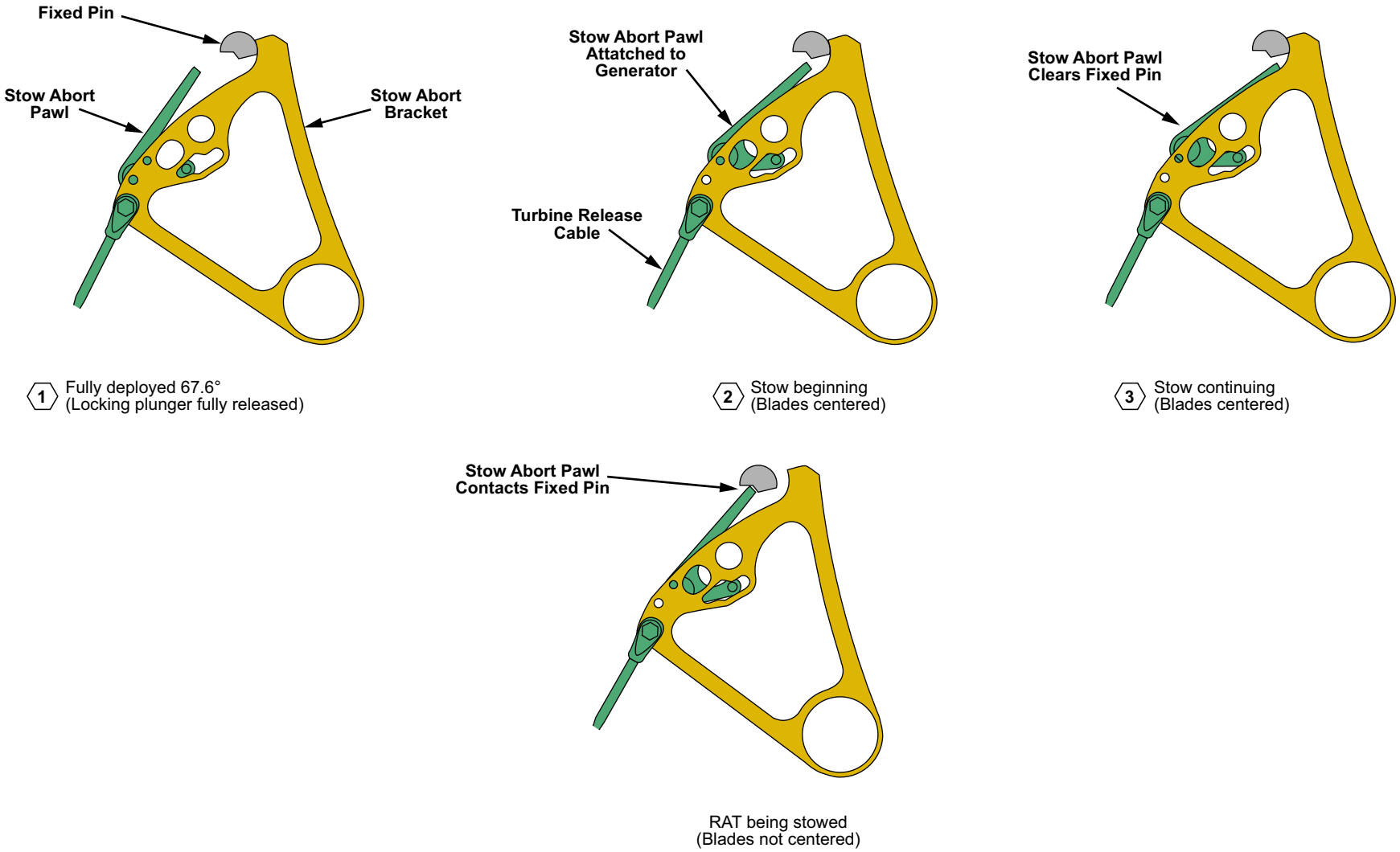

CS1_CS3_2423_008

Figure 98: RAT Stow Abort Function

CONTROLS AND INDICATIONS

RAT GENERATOR

In an in-flight emergency condition, RAT deployment is automatic, requiring no crew action.

Manual deployment, in-flight or on the ground, is accomplished by selection of the guarded RAT GEN PBA on the ELECTRICAL panel. When the RAT generator is supplying power, the ON light in the PBA, is illuminated.

The momentary RAT GEN PBA also sends a signal to the RGC to command the RLC closed. This connects the RAT GEN to the AC ESS BUS.

Indication of RAT deployment is displayed on the ELECTRICAL synoptic page.

NOTE

Because the RAT GEN PBA is connected to the DC EMER BUS, the RAT deploys as soon as the PBA is pressed, even if the aircraft is unpowered.

Copyright © Bombardier Inc.

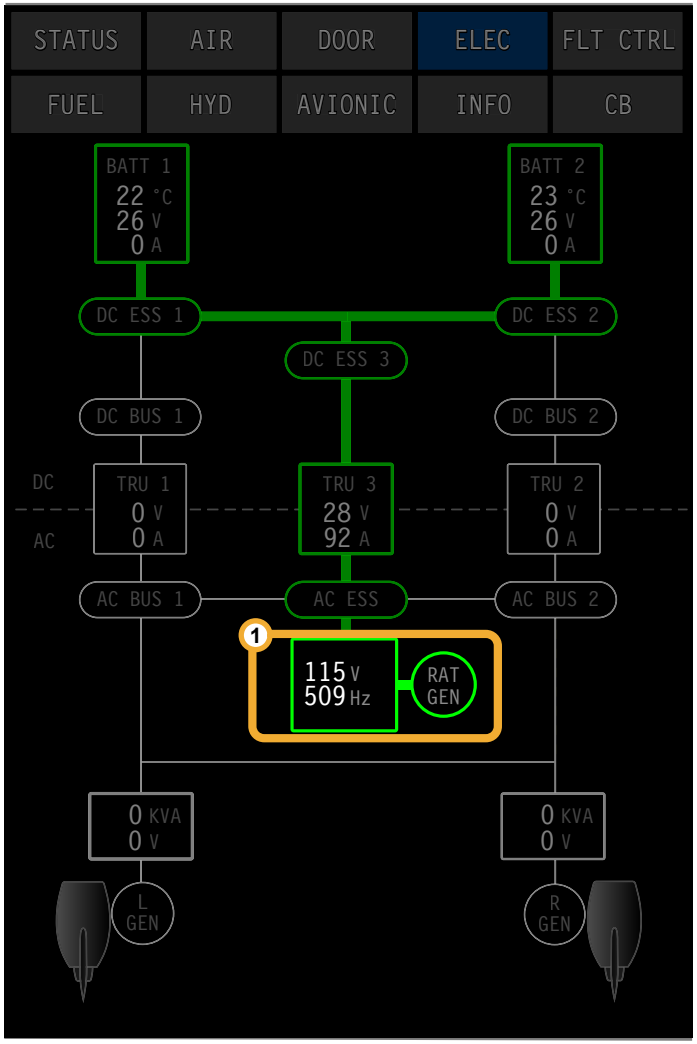

SYNOPTIC PAGE - ELECTRICAL

1 Displayed only:
When RAT is deployed
OR
RAT Line Contactor CLSD

2 **RAT GEN PBA**
Press to manually deploy RAT
Press to turn RAT generator off

ELECTRICAL PANEL

WARNING

The RAT GEN PBA is connected to the DC EMER BUS. The RAT will deploy when the PBA is pressed, even if the aircraft is unpowered.

CS1_CS3_2423_011

Figure 99: RAT Generator Control and Indications

DETAILED DESCRIPTION

RAT DEPLOYMENT

An autodeployment of the ram air turbine (RAT) occurs when AC BUS 1 and AC BUS 2 power is lost while the aircraft is in the air mode. Power loss is determined by the position of the generator line contactor (GLC) 1, GLC 2, and the APU line contactor (ALC). The emergency power control (EMPC) monitors the auxiliary contacts of the GLCs and ALC. Anytime all three contactors are open, AC BUS 1 and AC BUS 2 are unpowered.

Additional logic is provided by the weight-on-wheels (WOW) inputs from the landing gear steering control units (LGSCUs). In flight, the deploy logic uses either WOW input and an airspeed signal greater than 50 kt from the air data system.

The EMPC internal logic for automatic deployment prevents inadvertent RAT deployment during ground operation. If the aircraft is on jacks during maintenance, both WOW signals from the LGSCUs must be in agreement. The external power line contactor (ELC) position is monitored using one of the ELC auxiliary contacts. The emergency power control (EMPC) auto deploy logic is inhibited for 10 seconds to ensure the WOW air or ground state is determined by the LGSCU.

In an auto deployment, the EMPC supplies 28 VDC to the RAT auto deploy solenoid for 1.75 seconds. The RAT can also be deployed manually pressing the RAT GEN PBA on the ELECTRICAL panel. The RAT GEN PBA ON light illuminates when the RAT is deployed and producing power. The RAT PBA supplies 28 VDC from the DC EMER BUS to the RAT manual deploy solenoid. When either solenoid is energized, the uplock is released and the RAT deployment actuator extends the RAT into the air stream. The turbine accelerates to an operating speed between 4600 rpm and 6500 rpm.

RAT deployment is monitored by the RAT deployed proximity switch and indicated by a RAT DPLY advisory message on the engine indication and crew alerting system (EICAS).

Copyright © Bombardier Inc.

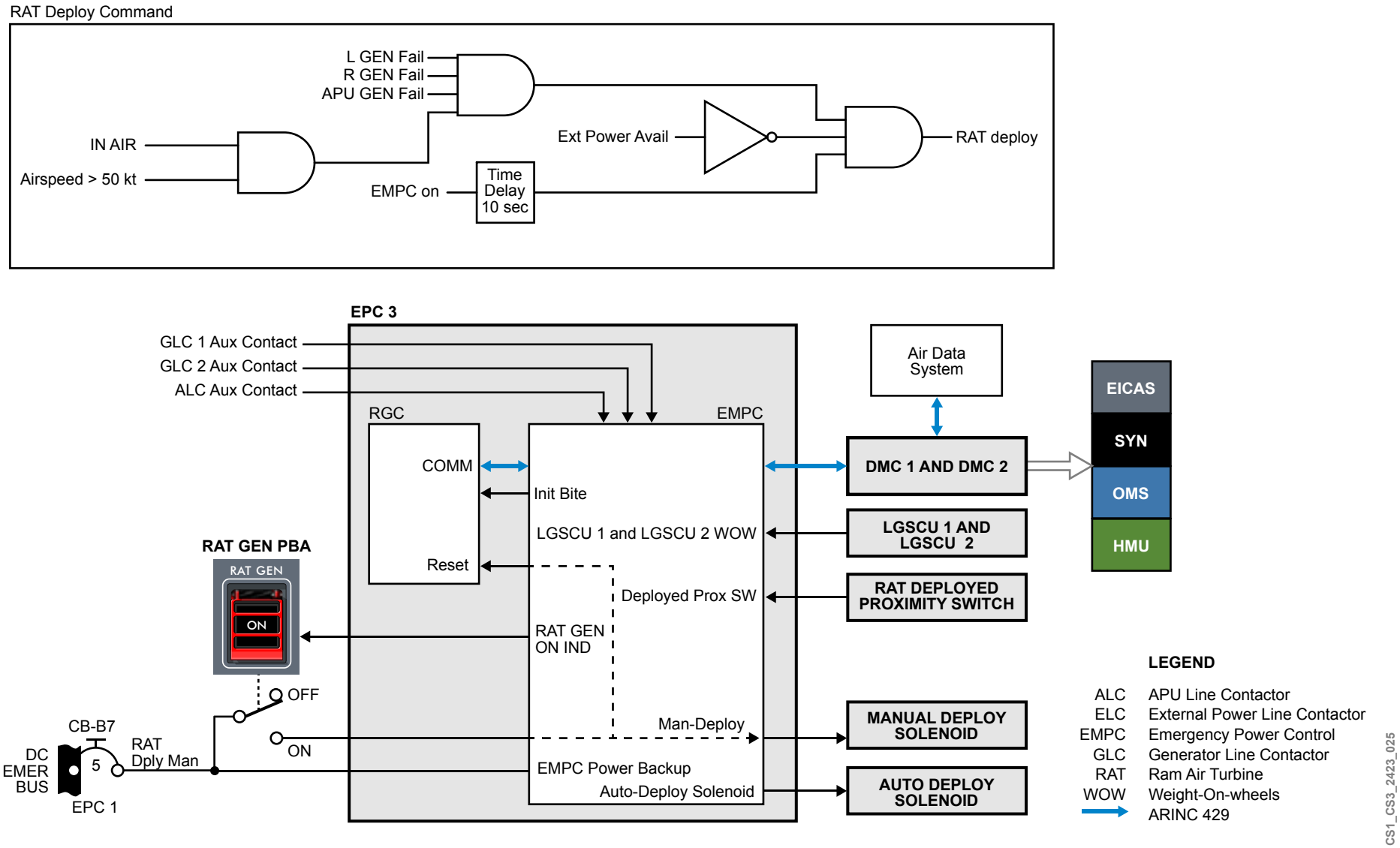

Figure 100: RAT Deployment

RAT GENERATOR CONTROL

The RAT generator control (RGC) is only powered when the RAT is deployed and operating, and during a power-up built-in test (BIT). During a power-up BIT, the RGC receives 28 VDC from the EMPC LRM to power the RGC and begin the BIT function. Under all other conditions, the RGC only receives power from the RAT permanent magnet generator. With the EMPC LRM powering the RGC during power-up BIT, the RAT line contactor (RLC) can be tested. The RGC monitors the output frequency of the RAT AC generator and, when the threshold frequency of 425 Hz is reached, the RGC commands the RLC to close and connect the RAT generator to the AC ESS BUS. The RLC control is shared with the EMPC. The RGC provides a ground for the RLC coil, while the EMPC provides the power.

The EMPC provides 28 VDC to illuminate the RAT GEN PBA ON light on the ELECTRICAL panel in the flight deck. The logic to drive this light requires the RLC to be detected in the closed position with voltage sensed on phase-A at the point of regulation.

Under fault conditions, the RGC de-energizes and locks out the RLC, and de-excites and locks out generator excitation. To reset the system, the RAT GEN PBA must be cycled.

The EMPC provides communications over the ARINC 429 BUS for the RAT system control status, protection status, and BIT through the DMC to the aircraft health management system (AHMS) and EICAS.

The RAT generator current is measured via built-in current transformers.

The RAT generator incorporates two, 115 V single phase AC heaters to maintain the rotor and stator air gap above 0°C (32°F) during flight. One heater is powered when the outside sensed total air temperature (TAT) is 0°C (32°F) or less. Only one heater operates at a time.

This power is supplied from AC BUS 2 for RAT heater A, and AC BUS 1 for RAT heater B. An INFO message is displayed if either heater fails.

Copyright © Bombardier Inc.

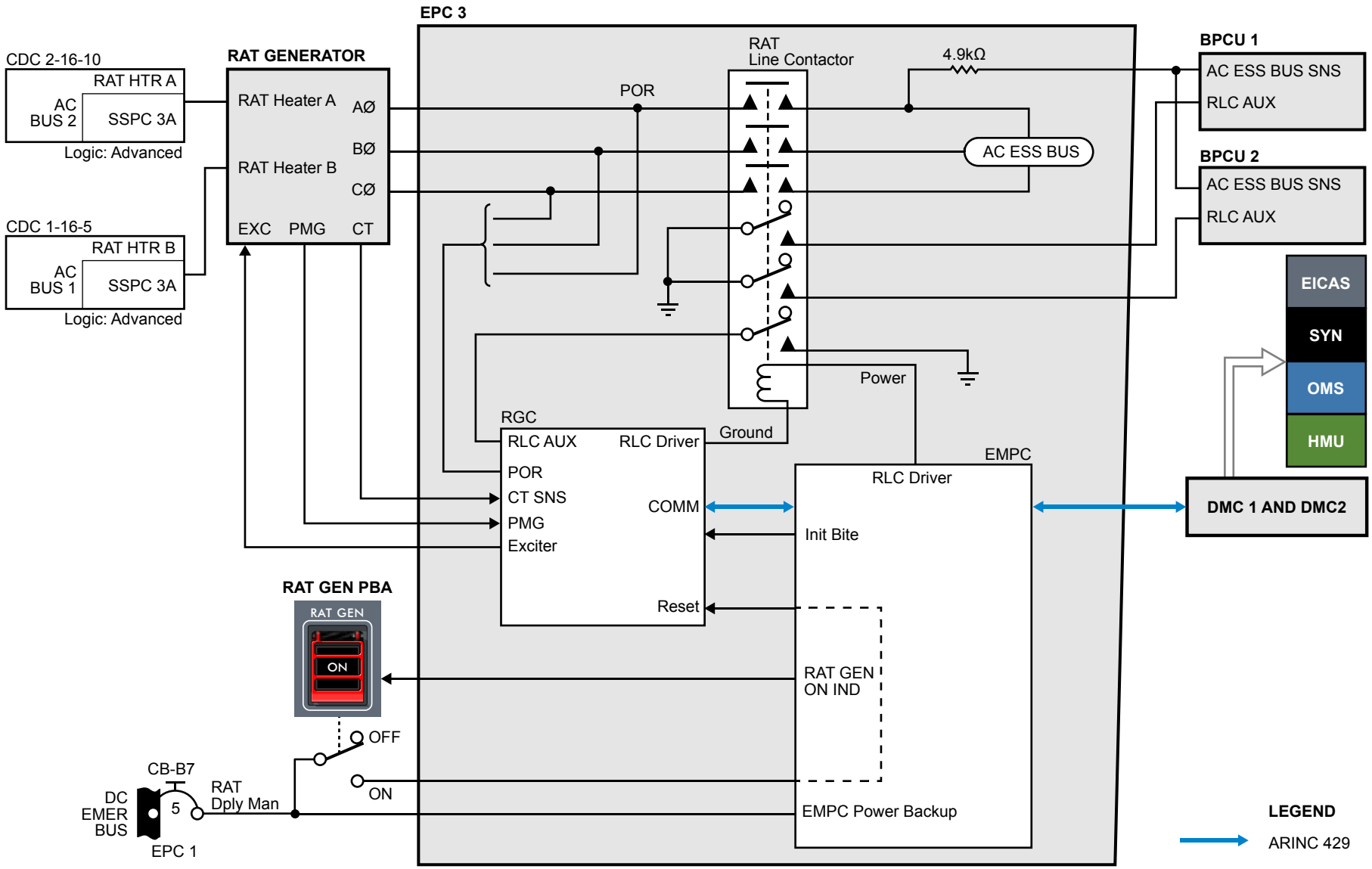

Figure 101: RAT Generator Control

EMERGENCY OPERATION

The emergency operation of the primary power distribution system is illustrated in the following modes:

- Ram air turbine (RAT) generator operation
- RAT generator with left VFG online
- RAT generator with left and right VFGs online

Ram Air Turbine Generator Operation

In flight, when the RAT is deployed with no other AC source available, the RAT generator supplies the AC ESS BUS and DC ESS BUS 3 through TRU 3.

Both battery line contactors (BLCs) are closed providing battery power to their respective DC ESS BUS. In addition, the EMPC and BPCUs closes all of the essential tie contactors (ETCs) to parallel all DC ESS BUSES and BAT DIR BUSES.

Copyright © Bombardier Inc.

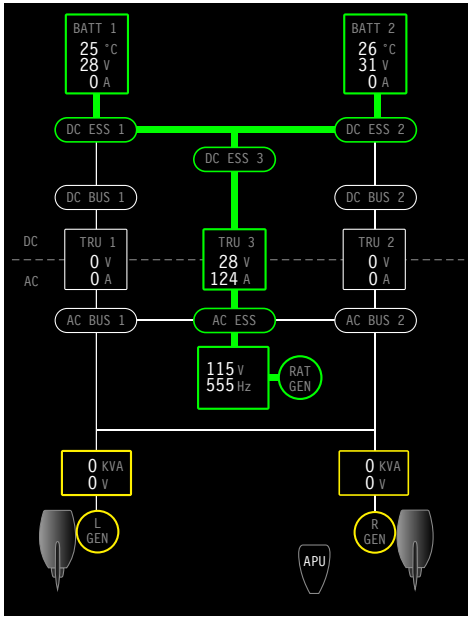

SYNOPTIC PAGE - ELECTRICAL

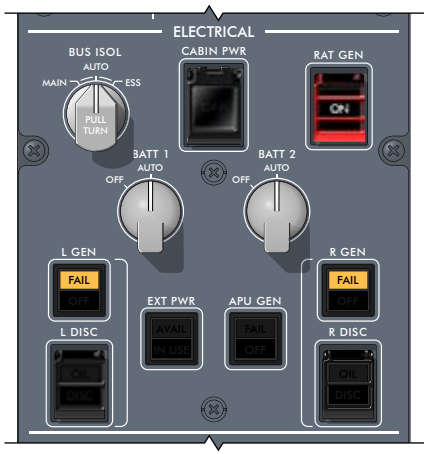

ELECTRICAL PANEL

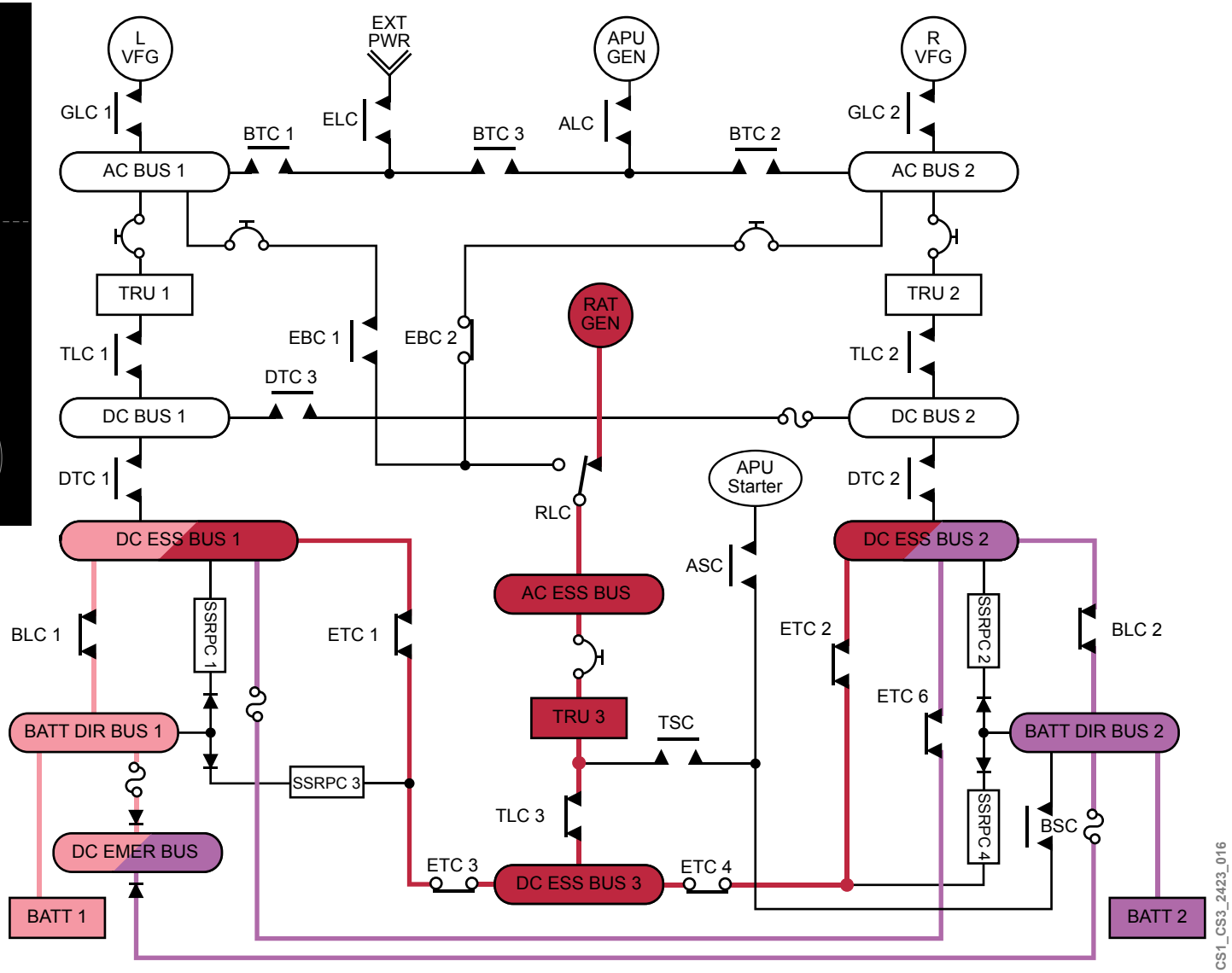

Figure 102: Ram Air Turbine Generator Online

RAT Generator with Left VFG Online

If the RAT generator is online when a VFG comes online, it will supply the AC BUSES, DC BUSES, and DC ESS BUSES 1 and 2. The RAT generator supplies the AC ESS BUS and DC ESS BUS 3 only.

The batteries supply only their respective battery direct buses.

Copyright © Bombardier Inc.

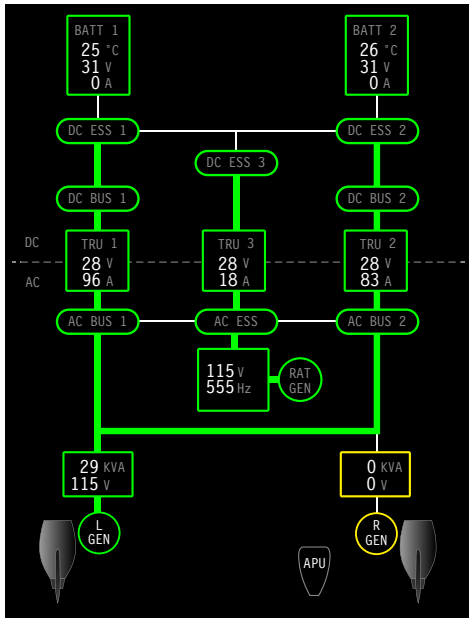

SYNOPTIC PAGE - ELECTRICAL

ELECTRICAL PANEL

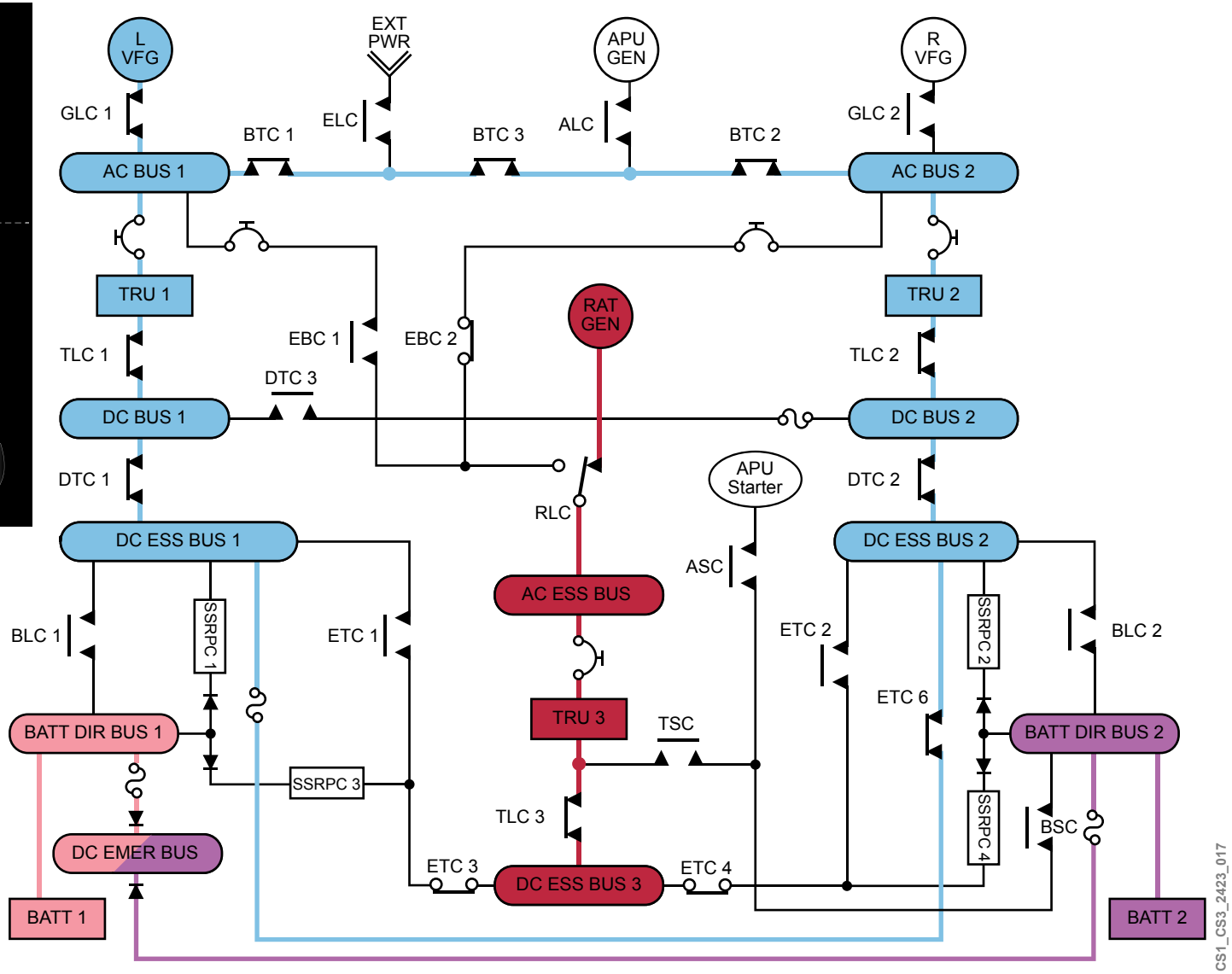

Figure 103: Ram Air Turbine Generator with Left VFG Online

RAT Generator with Left and Right VFGs Online

With the RAT generator supplying power when both VFGs are online, the AC buses are supplied from their corresponding generator. The RAT generator continues to supply the AC ESS BUS and DC ESS BUS 3.

Copyright © Bombardier Inc.

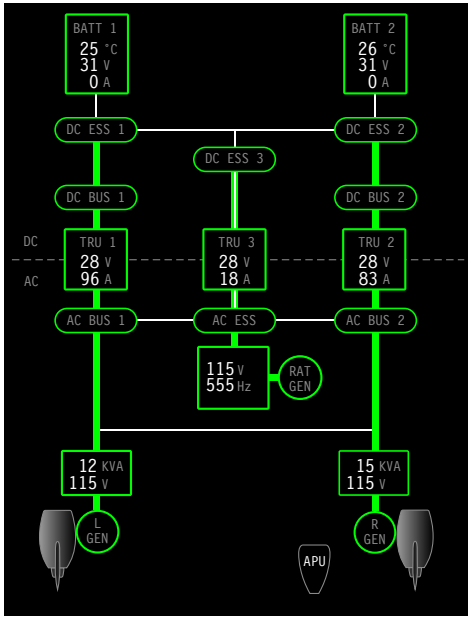

SYNOPTIC PAGE - ELECTRICAL

ELECTRICAL PANEL

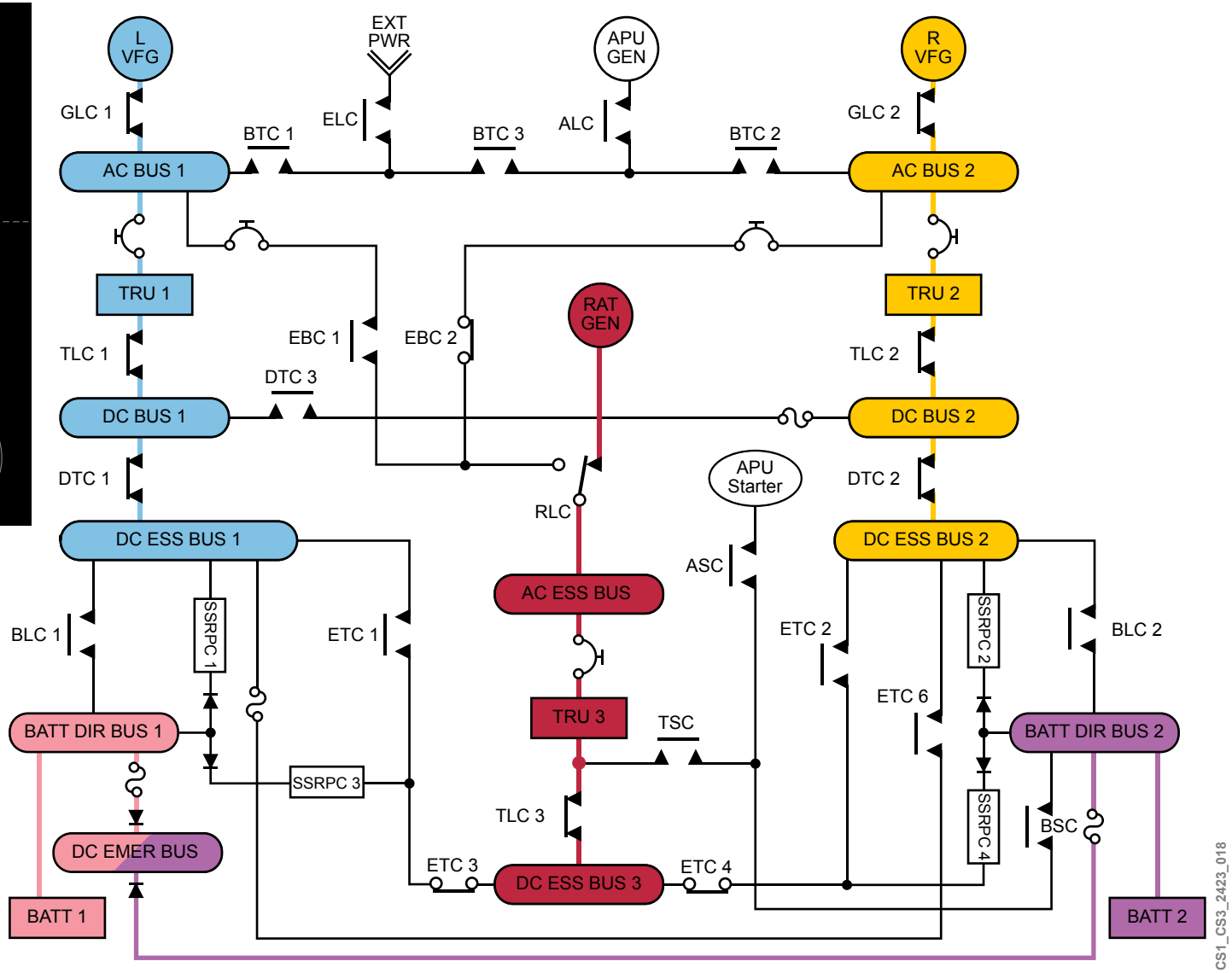

Figure 104: Ram Air Turbine Generator with Both VFGs Online

OPERATION

RAT STOW

Stowing of the RAT is accomplished using the RAT stow switch and pressure from hydraulic system no. 3.

To stow the RAT:

1. Hydraulic system no. 3 must be pressurized.
2. The RAT blades must be aligned properly.
3. Select and hold the RAT stow switch until the RAT deploy actuator lock has been engaged.
4. Insert the RAT safety pin if the aircraft is not required for flight.

Copyright © Bombardier Inc.

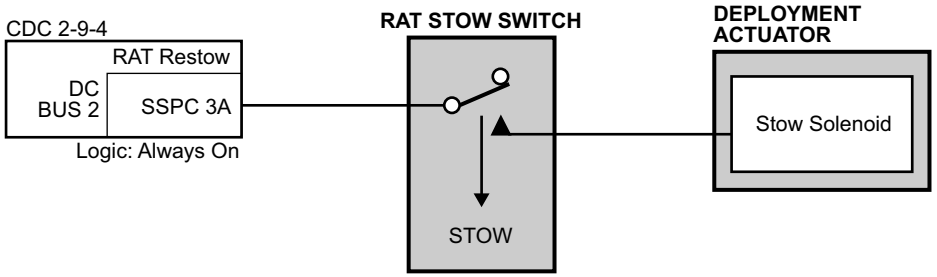

CS1_CS3_2423_019

Figure 105: RAT Stow Operation

MONITORING AND TESTS

The following page provides the crew alerting system (CAS) and INFO messages for the electrical emergency generation system.

Copyright © Bombardier Inc.

CAS MESSAGES

Table 24: WARNING Messages

MESSAGE	LOGIC
EMER PWR ONLY	Loss of the main power generation including the APU generator when the aircraft is in the air, RAT is online OR battery power only.

Table 25: CAUTION Message

MESSAGE	LOGIC
RAT GEN FAIL	RGC has detected fault during BIT or RAT is not supplying power when demanded.

Table 26: ADVISORY Messages

MESSAGE	LOGIC
RAT DPLY	Ram air turbine deployed.
RAT GEN ON	Loss of the main power generation including the APU generator when the aircraft is in the air, RAT is online.
ELECTRICAL FAULT	Loss of redundant or non-critical function for the electrical system (refer to INFO messages).

Table 27: INFO Messages

MESSAGE	LOGIC
24 ELECTRICAL FAULT - RAT HEATER A INOP	RAT heater A failed.
24 ELECTRICAL FAULT - RAT HEATER B INOP	RAT heater B failed.
24 ELECTRICAL FAULT - RAT ACTUATOR HI PRESS	RAT will not deploy with residual pressure in the actuator.
24 ELECTRICAL FAULT - EMPC COM LOSS	Loss of communication with the EMPC end system.

Copyright © Bombardier Inc.

PRACTICAL ASPECTS

RAT GROUND SAFETY PIN INSTALLATION

During ground maintenance, a ground safety pin must be installed to lock the RAT in the stowed position. The pin holds the RAT to the aircraft structure and prevents the RAT from deploying.

To install the RAT safety pin, open the RAT stow panel access door.

WARNING

MAKE SURE THE RAM AIR TURBINE (RAT) SYSTEM IS DEACTIVATED BEFORE PERFORMING MAINTENANCE ON THE RAM AIR TURBINE SYSTEM COMPONENTS. SOME MAINTENANCE PROCEDURES CAN CAUSE AN ACCIDENTAL EXTENSION OF THE RAT. TO PREVENT ACCIDENTAL EXTENSION OF THE RAT, MAKE SURE THAT THE SYSTEM IS DEACTIVATED AND THE SAFETY PIN IS CORRECTLY INSTALLED.

TO PREVENT INJURY TO PERSONS AND/OR DAMAGE TO EQUIPMENT, THE RAT CAN EXTEND RAPIDLY. THE AREA NEAR THE RANGE OF EXTENSION OF THE RAT AND THE RAT DOOR MUST BE CLEAR.

Copyright © Bombardier Inc.

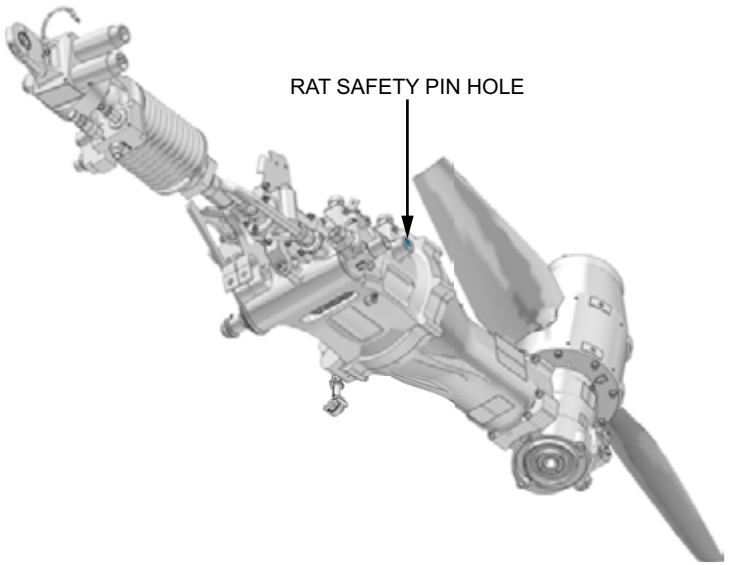

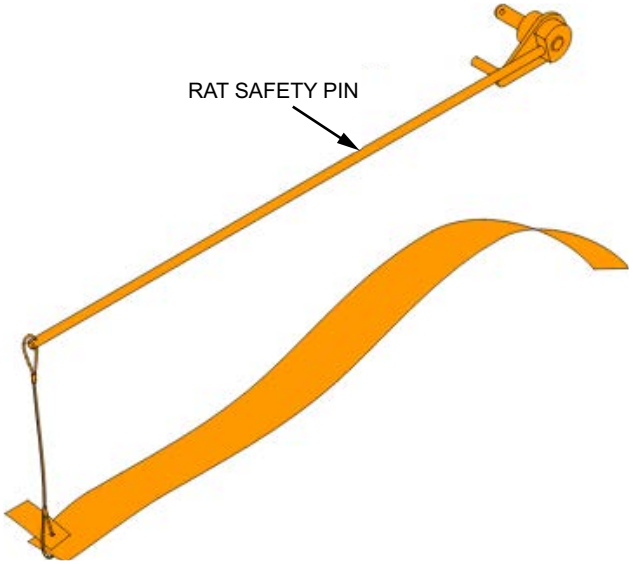

CS1_CS3_2400_019

Figure 106: RAT Safety Pin Installation

RAT SERVICING

The ram air turbine gearbox uses MIL-L-7808 oil in a cavity created by the gearbox housing. The gearbox housing is supplied with a drain port, sight glass, and a fill port.

Servicing of ram air turbine oil is based on a fill-to-spill method with the RAT in the deployed position.

Copyright © Bombardier Inc.

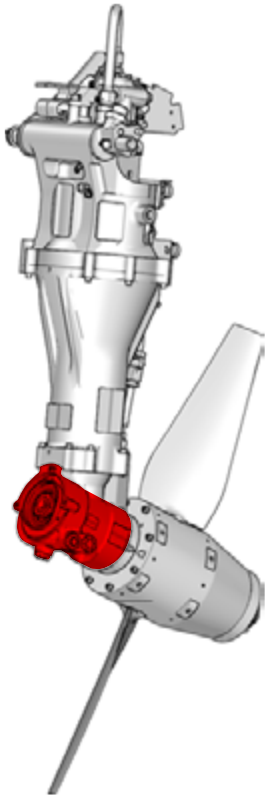

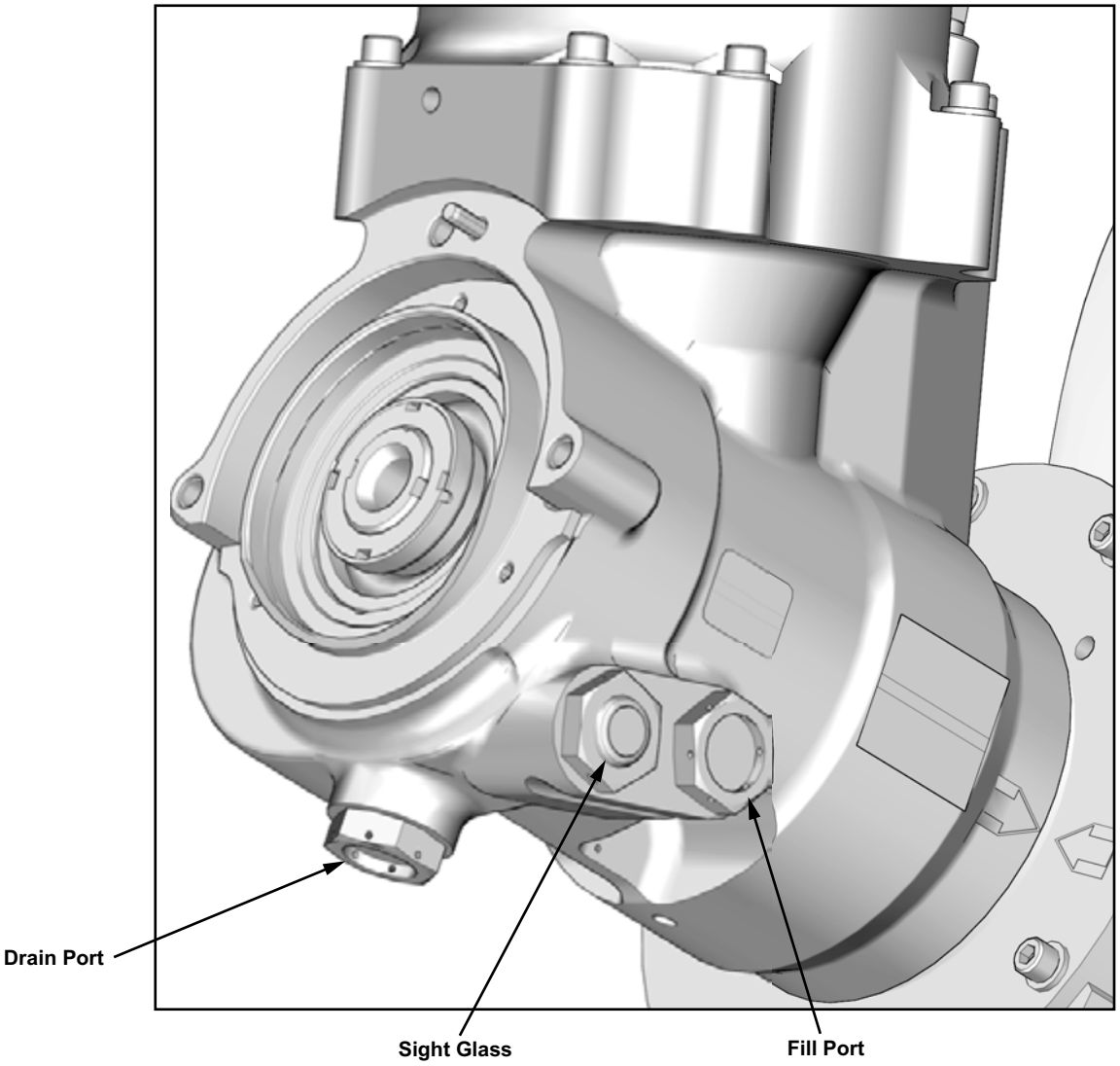

CS1_CS3_2423_021

Figure 107: RAT Servicing

RAT GROUND TEST

The RAT ground test back drive unit is attached to the RAT gearbox to drive the RAT hydraulically for ground testing.

The generator output can be seen on the ELEC synoptic page when the RAT is being driven.

Copyright © Bombardier Inc.

CS1_CS3_2420_021

Figure 108: Ground Test Back Drive Unit Attachment

Copyright © Bombardier Inc.

Page Intentionally Left Blank

ATA 31 - Indicating/ Recording System

BD-500-1A10
BD-500-1A11

Table of Contents

31-10 Instruments and Control Panels 31-2
General Description 31-2
ICCP Power Supply 31-4
Panel Annunciator Brightness Control and Test 31-6
ICCP Panel Integral lighting 31-8
Component Location 31-10
Panel Interface Modules 31-10
Remote Data Concentrators 31-12
Detailed Description 31-14
ICCP Panel Integral Lighting 31-16
Monitoring and Tests 31-24
Panel Annunciators - Annunciator Test 31-24
CAS Messages 31-26
31-20 Integrated Clock System 31-28
General Description 31-28
Control Tuning Panel CLOCK Page 31-28
Primary Flight Display 31-28
Practical Aspects 31-30
Setting the Clock 31-30
31-40 Integrated Avionics Processing 31-32
General Description 31-32
Component Location 31-34
Component Information 31-36
Display Units 31-36
Integrated Processing Cabinets 31-38
Data Concentrator Unit Module Cabinets 31-40
Detailed Description 31-42
Display Unit Interface 31-42
Integrated Processing Cabinets 31-44
Data Concentration System 31-56
Aircraft Personality Module 31-64
Data Concentrator Unit
Module Cabinets Interface 31-66
Monitoring and Tests 31-68
CAS Messages 31-69
Practical Aspects 31-72
Display Unit Removal/Installation 31-72
IPC and DMC Module Removal/Installation 31-74
IPC and DMC Module Lamps 31-76
Field Loadable Software 31-78
31-60 Electronic Flight Instrument System 31-84
General Description 31-84
Controls and Indications 31-86
Control Panels 31-88
Operation 31-96
MFW Format Control 31-98
MFW Format Merging 31-100
MFW Graphic User Interface 31-102
MFW Overlay Menu 31-104
Detailed Description 31-106
Automatic Display Reversion 31-106
Monitoring and Tests 31-116
Display Comparator 31-116
Failure Flags 31-118
CAS Messages 31-120
31-40 Engine Indication and Crew Alerting System 31-122
General Description 31-122
EICAS Interface 31-122
Aural Warning Inhibit 31-122
Detailed Description 31-124

Copyright © Bombardier Inc.

Data Acquisition and Distribution 31-124
Operation 31-138
EICAS Page Control 31-138
CAS Message List Control 31-140
INFO Messages 31-142
Electronic Checklist 31-144
Monitoring and Tests 31-150
CAS Messages 31-151

31-30 Flight Data Recorder 31-152

General Description 31-152
Component Location 31-154
Triaxial Accelerometer 31-156
Controls and Indications 31-158
Pilot Event Switch 31-158
Detailed Description 31-160
Monitoring and Tests 31-162
CAS Messages 31-163

Copyright © Bombardier Inc.

List of Figures

Figure 1: ICCP Overview 31-3
Figure 2: ICCP Panel Power 31-5
Figure 3: Annunciator Brightness and Lamp Test Control 31-7
Figure 4: Panel Integral Lighting 31-9
Figure 5: Panel Interface Module Locations 31-11
Figure 6: ICCP Component Locations - Remote Data Concentrators 31-13
Figure 7: ICCP Operation 31-15
Figure 8: Integral Lighting Operation Zone 1 31-17
Figure 9: Integral Lighting Operation Zone 2 31-19
Figure 10: Integral Lighting Operation Zone 3 31-21
Figure 11: Integral Lighting Operation Zone 4 31-23
Figure 12: Lamp Test 31-25
Figure 13: Integrated Clock System 31-29
Figure 14: Setting the Clock 31-31
Figure 15: Integrated Modular Avionics Architecture 31-33
Figure 16: Avionics Processing Components 31-35
Figure 17: Display Unit Installation 31-37
Figure 18: Integrated Processing Cabinet 31-39
Figure 19: Data Concentrator Unit Module Cabinet 31-41
Figure 20: Display Unit Interface 31-43
Figure 21: Integrated Processing Cabinet and Modules 31-45
Figure 22: Cover and Environmental and Power and Environment Modules 31-47
Figure 23: IPC 1 and 2 - Common Computing Modules 31-49
Figure 24: IPC 3 and 4 Common Computing Modules 31-51
Figure 25: IPC 1 to IPC 4 Digital Switching Module 31-53
Figure 26: IPC Interface 31-55
Figure 27: Data Concentrator Unit Module Cabinets 31-57
Figure 28: Cover and Environmental and Power Producing Modules 31-59
Figure 29: Input/Output Modules 31-61
Figure 30: Data Concentrator Module 31-63
Figure 31: Aircraft Personality Module 31-65
Figure 32: DMC Input/Output 31-67
Figure 33: Display Unit Installation 31-73
Figure 34: Module Removal/Installation 31-75
Figure 35: Module Power Lamps and On/Off Shunt 31-77
Figure 36: Display Unit Loadset/Application 31-79
Figure 37: IPC Loadset 31-81
Figure 38: DMC Loadset 31-83
Figure 39: EFIS Layout 31-85
Figure 40: Display Units Default Arrangement 31-87
Figure 41: EFIS Controls 31-89
Figure 42: Cursor Control Panel 31-91
Figure 43: Multifunction Keyboard Panel 31-93
Figure 44: Reversion Switch Panel 31-95
Figure 45: General Cursor Operation 31-97
Figure 46: MFW Formats and Sub Menus 31-99
Figure 47: Full Multifunction Window Format 31-101
Figure 48: Graphical Symbol Selection 31-103

Copyright © Bombardier Inc.

Figure 49: Overlay Selection 31-105
Figure 50: Automatic Display Reversion 31-107
Figure 51: Half PFD Display 31-109
Figure 52: Multiple DU Failure 31-111
Figure 53: Reversion Selection 31-113
Figure 54: Reversion Mode Message 31-115
Figure 55: Comparator Flags 31-117
Figure 56: Failure Flags 31-119
Figure 57: EICAS General Interface 31-123
Figure 58: Data Concentrator Unit Module Cabinet EICAS Interface 31-125
Figure 59: EICAS Message/Aural Processing 31-127
Figure 60: Phases of Flight 31-129
Figure 61: Maintenance, Ground, Taxi, and Takeoff Phases of Flight 31-131
Figure 62: Climb, Cruise, Approach, Landing, Go-Around, and Roll Out Phases of Flight 31-133
Figure 63: Takeoff Configuration Warning 31-135
Figure 64: Master WARNING/CAUTION PBA Operation 31-137
Figure 65: EICAS Swap Position 31-139
Figure 66: CAS Message List Display Control 31-141
Figure 67: EICAS INFO Messages 31-143
Figure 68: ECL Access and SUMMARY Page 31-145
Figure 69: ECL Menu Page Displays 31-147
Figure 70: Checklist Display 31-149
Figure 71: Flight Data Recorder System 31-153
Figure 72: Flight Data Recorder Component Location 31-155
Figure 73: Flight Data Recorder Component Location 31-157
Figure 74: PILOT EVENT Switch 31-159
Figure 75: FDR Interface 31-161

Copyright © Bombardier Inc.

Page Intentionally Left Blank

INDICATING/RECORDING SYSTEMS - CHAPTER BREAKDOWN

Instruments and Control Panels 1

Integrated Avionics Processing 2

Electronic Flight Instrument System 3

Engine Indication and Crew Alerting System 4

Flight Data Recorder 5

31-10 INSTRUMENTS AND CONTROL PANELS

GENERAL DESCRIPTION

The integrated cockpit control panel (ICCP) system provides an interface for control and indication of aircraft systems. The ICCP uses a triple-redundant digital-backbone architecture that consists of control panels, remote data concentrators (RDCs), and panel interface modules (PIMs).

The following control panels are part of the ICCP system:

- OVERHEAD panel
- TRIM panel
- ENGINE panel
- LIGHTING/COCKPIT DOOR panel
- LANDING GEAR panel
- L and R GLARESHIEL panels
- PARKING BRAKE panel

Each panel has switches and pushbutton annunciators (PBAs) to control the aircraft systems. Some PBAs are line replaceable. Other faults on the control panels require replacement of the entire panel.

The PIMs monitor the panel switches and control illumination of status annunciators. The PIMs also provide integral lighting power for the ICCP control panels. Three PIMs are installed in the overhead panel and three PIMs are integrated into the following control panels on the pedestal:

- TRIM panel
- ENGINE panel
- LIGHTING/COCKPIT DOOR panel

The switch data is communicated over three controller area network (CAN) BUSES to the RDCs. Some switches for critical systems are hardwired directly into the aircraft systems to ensure their continued operation without the avionics being operational. The hardwired switches are not monitored by the PIMs.

Three RDCs provide the interface between the ICCP and the data concentrator unit module cabinets (DMCs) via ARINC 429 BUSES. Each RDC provides output to the DMCs for distribution to the aircraft systems for control. The DMCs use switch position information for operational confirmation, system monitoring, CAS message logic, electronic checklist logic, and display indications. The aircraft systems provide signals to turn on annunciators on the panels. The RDCs also provide integral lighting control and annunciator brightness control for control panels not associated with the ICCP.

The following hardwired discrete switches and controls are not digitally monitored by the ICCP system:

- Left and right reading light potentiometers
- Left and right wiper rotary switches
- Left and right BTL 1 and BTL 2 pushbutton annunciators (PBAs)
- APU BTL PBA
- Left and right MASTER WARNING/MASTER CAUTION PBAs
- AUTOBRAKE switch
- AILERON trim switch
- Lighting control potentiometers and switches
- Communications pilot data link control buttons

Copyright © Bombardier Inc.

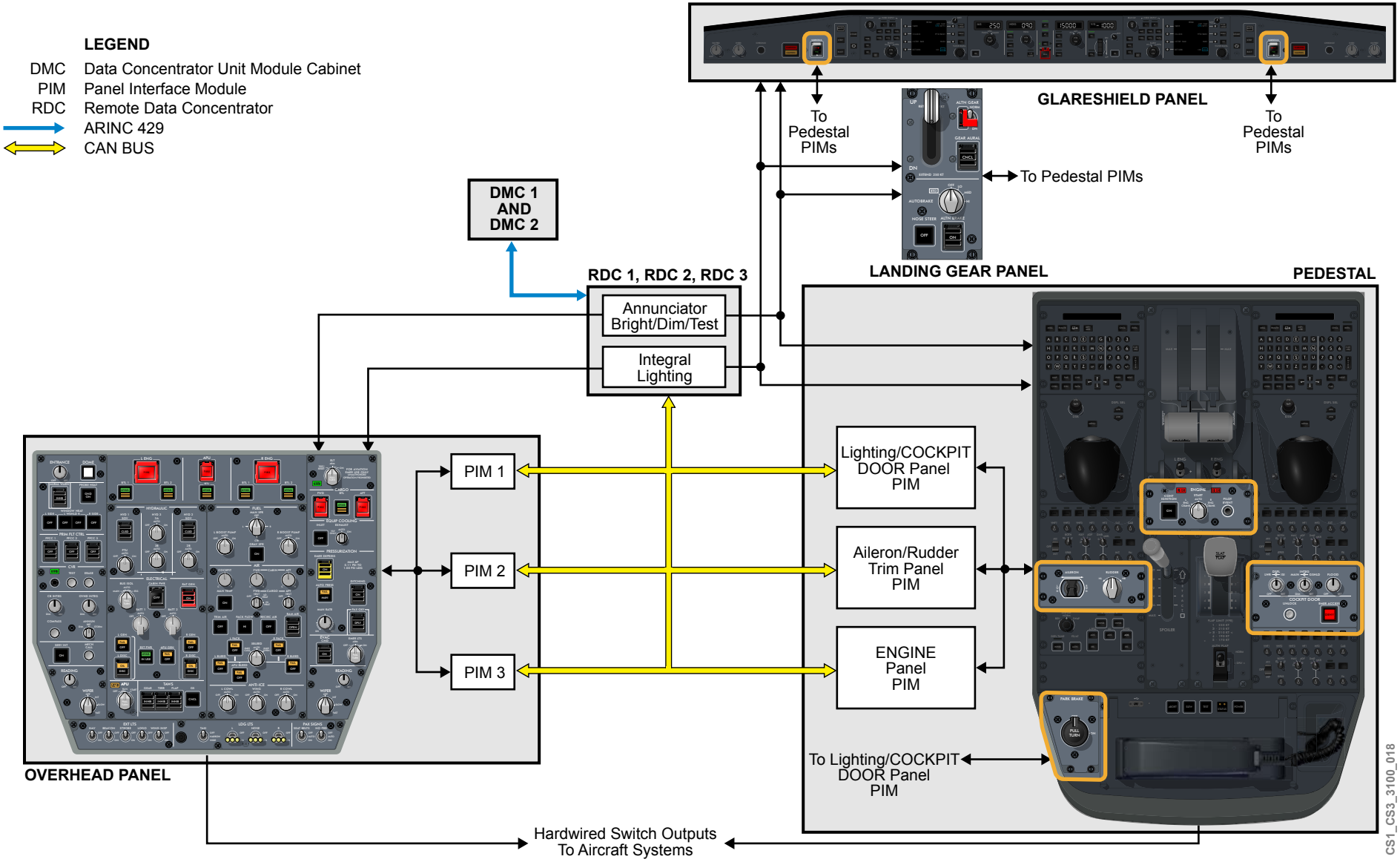

Figure 1: ICCP Overview

ICCP POWER SUPPLY

The ICCP system, including the panel interface modules (PIMs) and remote data concentrators (RDCs), receive 28 VDC power from the following DC electrical buses:

- DC ESS BUS 1
- DC ESS BUS 3
- DC BUS 2

Copyright © Bombardier Inc.

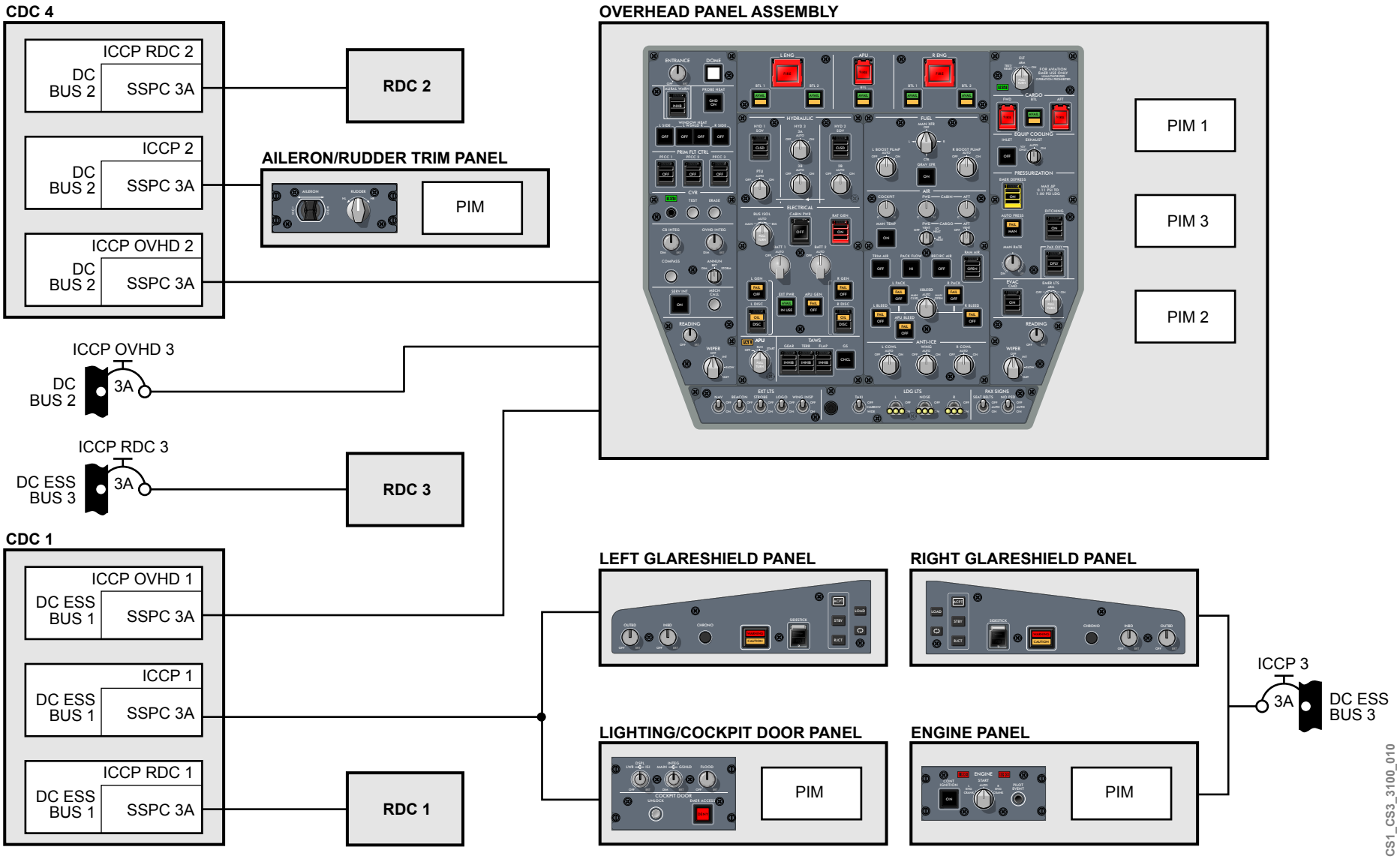

Figure 2: ICCP Panel Power

PANEL ANNUNCIATOR BRIGHTNESS CONTROL AND TEST

Brightness Control

The three position ANNUN rotary switch controls the dim/bright illumination of pushbutton annunciators (PBAs), discrete annunciators, multifunction keyboard panel (MKP) scratchpad, and the storm mode function.

The rotary switch provides the following selections to control the illumination of panel annunciators:

- In DIM, all illuminated annunciators and the MKP scratchpad are dim
- In BRT, all illuminated annunciators and the MKP scratchpad are bright
- In STORM, all illuminated annunciators, the MKP scratchpad, and the panel integral lighting is set to full bright, and the dome lights turn on

When the ANNUN switch is set to STORM, it overrides the setting of the integral lighting controls and dome light switch.

The ANNUN switch dim/bright command is routed to all PIMs located on the overhead panel and remote data concentrators (RDCs) through the CAN BUS. The panels not associated with the ICCP receive bright/dim discrete signals from the RDCs.

The RDCs use discrete outputs to control the brightness of annunciators that are on the following panels:

- L and R GLARESHIELD panels
- Control tuning panels (CTPs)
- Flight control panel (FCP)
- Multifunction keyboard panels (MKPs)
- Audio control panels (ACPs)
- LANDING GEAR panel
- Printer panel

The following PBAs always illuminate bright regardless of the ANNUN switch position:

- L ENG FIRE
- R ENG FIRE
- APU FIRE
- FWD CARGO FIRE
- AFT CARGO FIRE
- DOME

Lamp Test

The DMCs send the lamp test signal to the RDCs, which commands the PIMs to illuminate all ICCP annunciators through a CAN BUS. For panels not associated with the ICCP, the annunciators are turned on by discrete signals from the RDC.

MASTER WARNING/MASTER CAUTION Pushbutton Annunciators

The MASTER WARNING/MASTER CAUTION pushbutton annunciators on the L and R GLARESHIELD panels illuminate when they receive discrete inputs from the DMCs. During a LAMP test, the RDC provides brightness control and a test signal to illuminate the MASTER WARNING/MASTER CAUTION lights.

Copyright © Bombardier Inc.

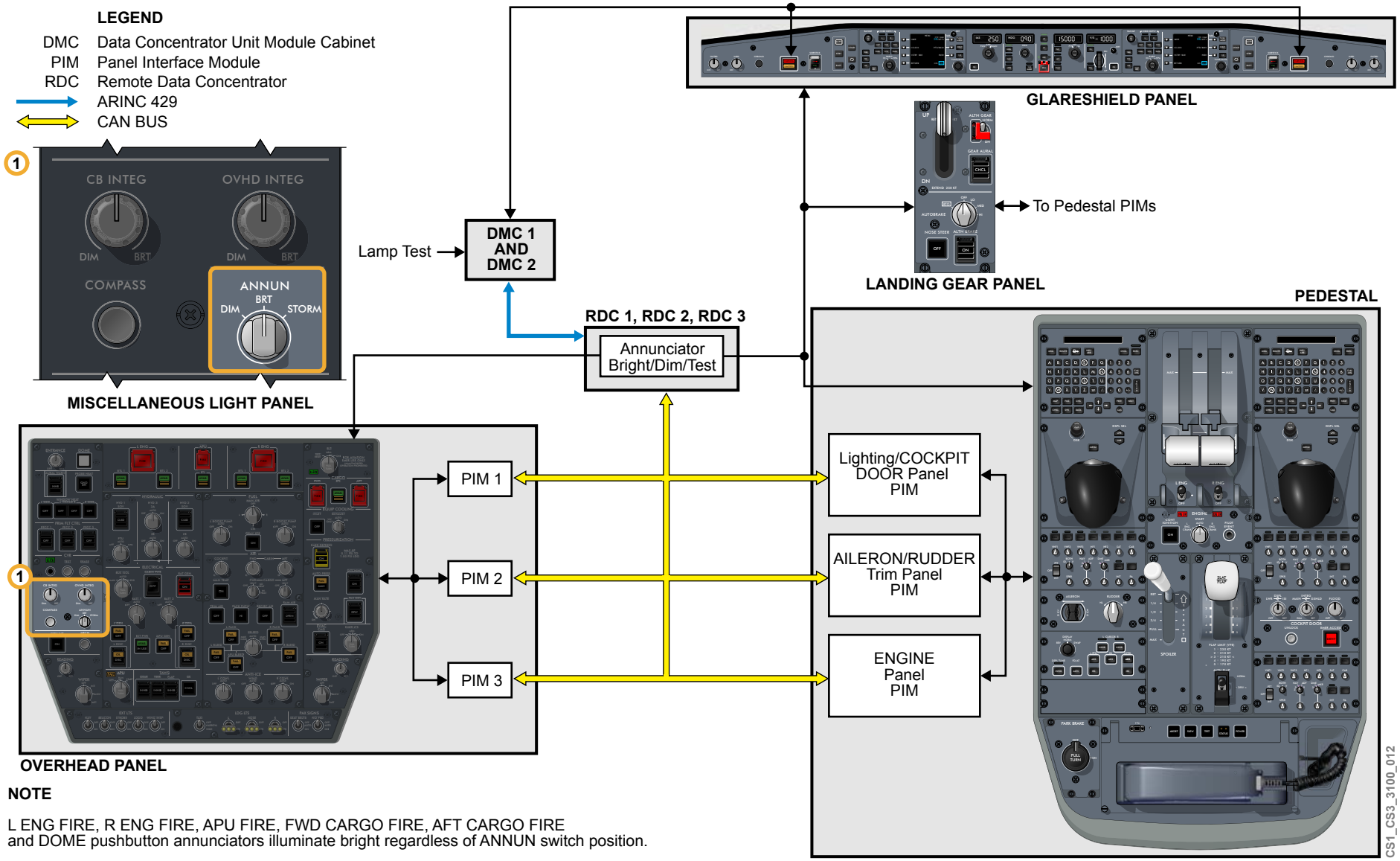

NOTE

L ENG FIRE, R ENG FIRE, APU FIRE, FWD CARGO FIRE, AFT CARGO FIRE and DOME pushbutton annunciators illuminate bright regardless of ANNUN switch position.

Figure 3: Annunciator Brightness and Lamp Test Control

ICCP PANEL INTEGRAL LIGHTING

Panel integral lighting control is divided into four zones, controlled by several potentiometer controls located on the pedestal and overhead panel assembly.

Zone 1 and zone 2 panel integral lighting is controlled by the concentric potentiometer labeled INTEG - MAIN/GSHLD. The outer MAIN knob provides integral lighting control for zone 1 panels as follows:

- Center pedestal panels
- Main instrument panel
- Left and right side panels

The inner GSHLD knob provides integral lighting control for the zone 2 panels as follows:

- Entire glareshield panel

The zone 3 panel integral lighting is controlled by the OVHD INTEG potentiometer, located on the left outboard overhead panel. The DIM-BRT selection provides integral lighting control for the:

- Overhead panels
- Eyebrow panel
- Magnetic compass

The zone 4 panel integral lighting is controlled by the CB INTEG potentiometer, located on the left outboard overhead panel. The DIM-BRT selection provides integral lighting control for the:

- Left circuit breaker panel
- Right circuit breaker panel

Copyright © Bombardier Inc.

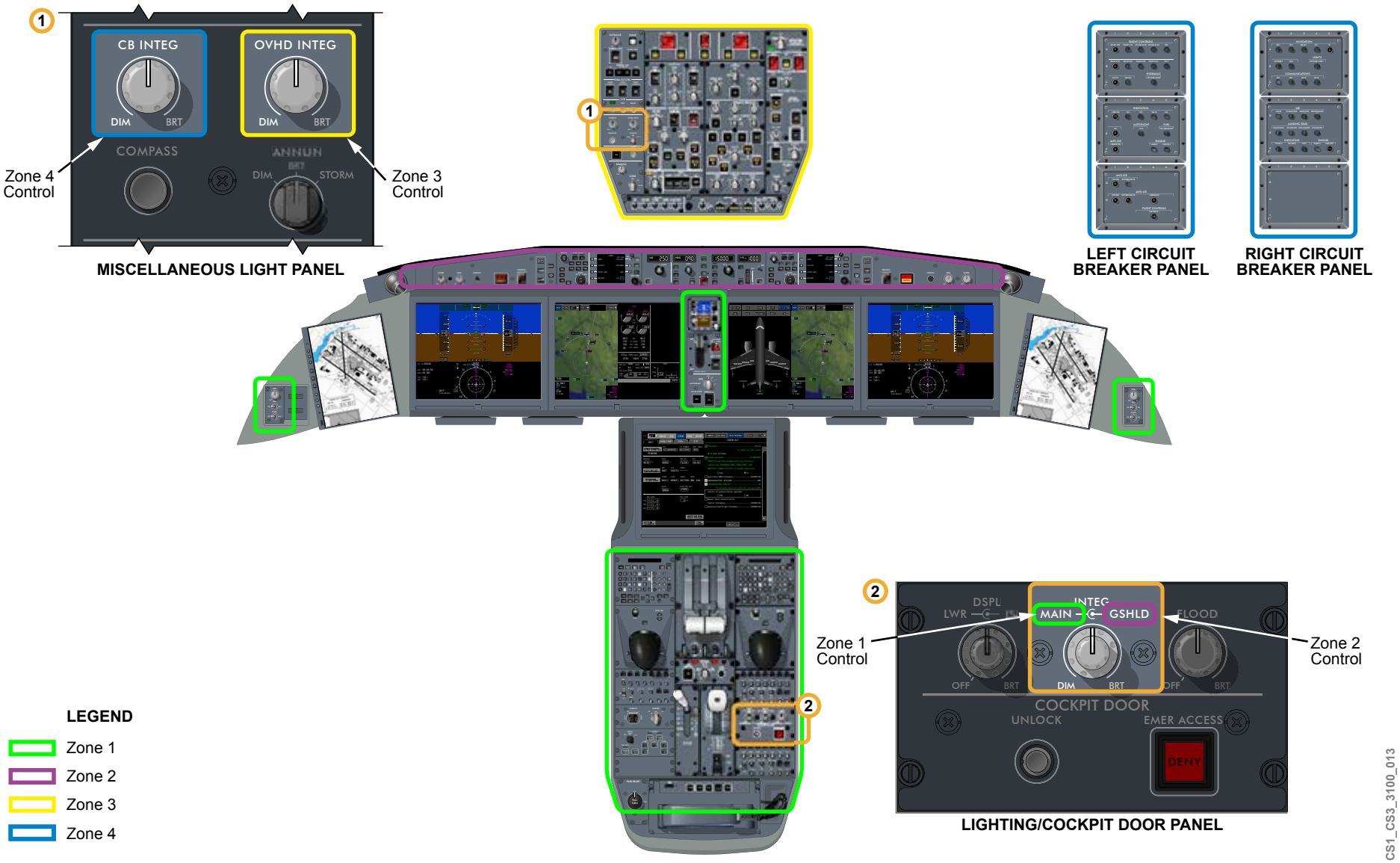

Figure 4: Panel Integral Lighting

COMPONENT LOCATION

The following components are considered line replaceable components of the ICCP:

- Panel interface modules
- Remote data concentrator units

PANEL INTERFACE MODULES

There are a total of six panel interface modules (PIMs). A panel interface module is located within each of the following pedestal panels:

- TRIM panel
- LIGHTING/COCKPIT DOOR panel
- ENGINE panel

The remaining three panel interface modules are installed within the overhead panel.

Copyright © Bombardier Inc.

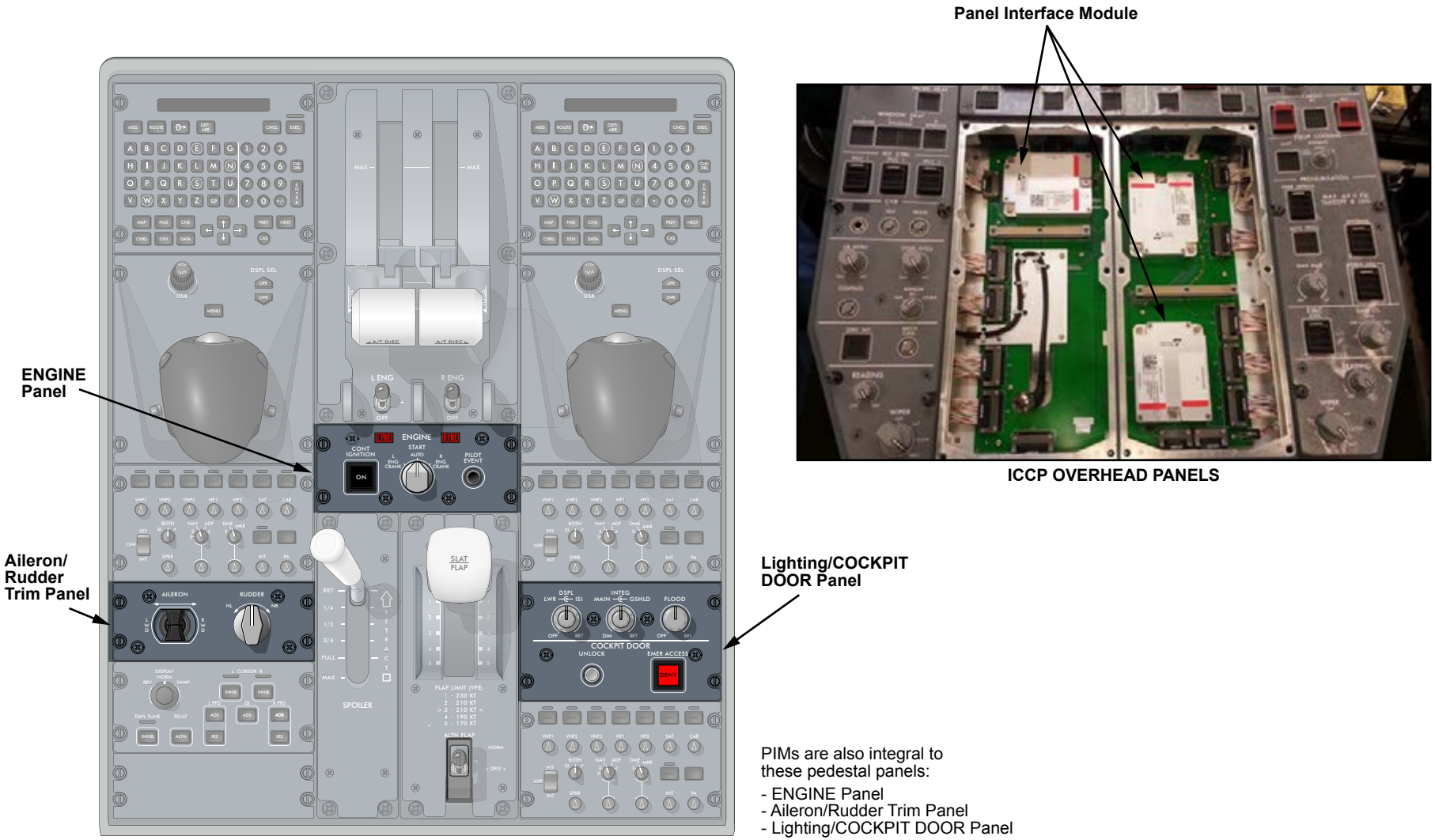

PIMs are also integral to these pedestal panels:

- ENGINE Panel
- Aileron/Rudder Trim Panel
- Lighting/COCKPIT DOOR Panel

CS1_CS3_3100_024

Figure 5: Panel Interface Module Locations

REMOTE DATA CONCENTRATORS

The three remote data concentrators (RDCs) units are installed in the forward equipment bay and under the flight deck floor.

Copyright © Bombardier Inc.

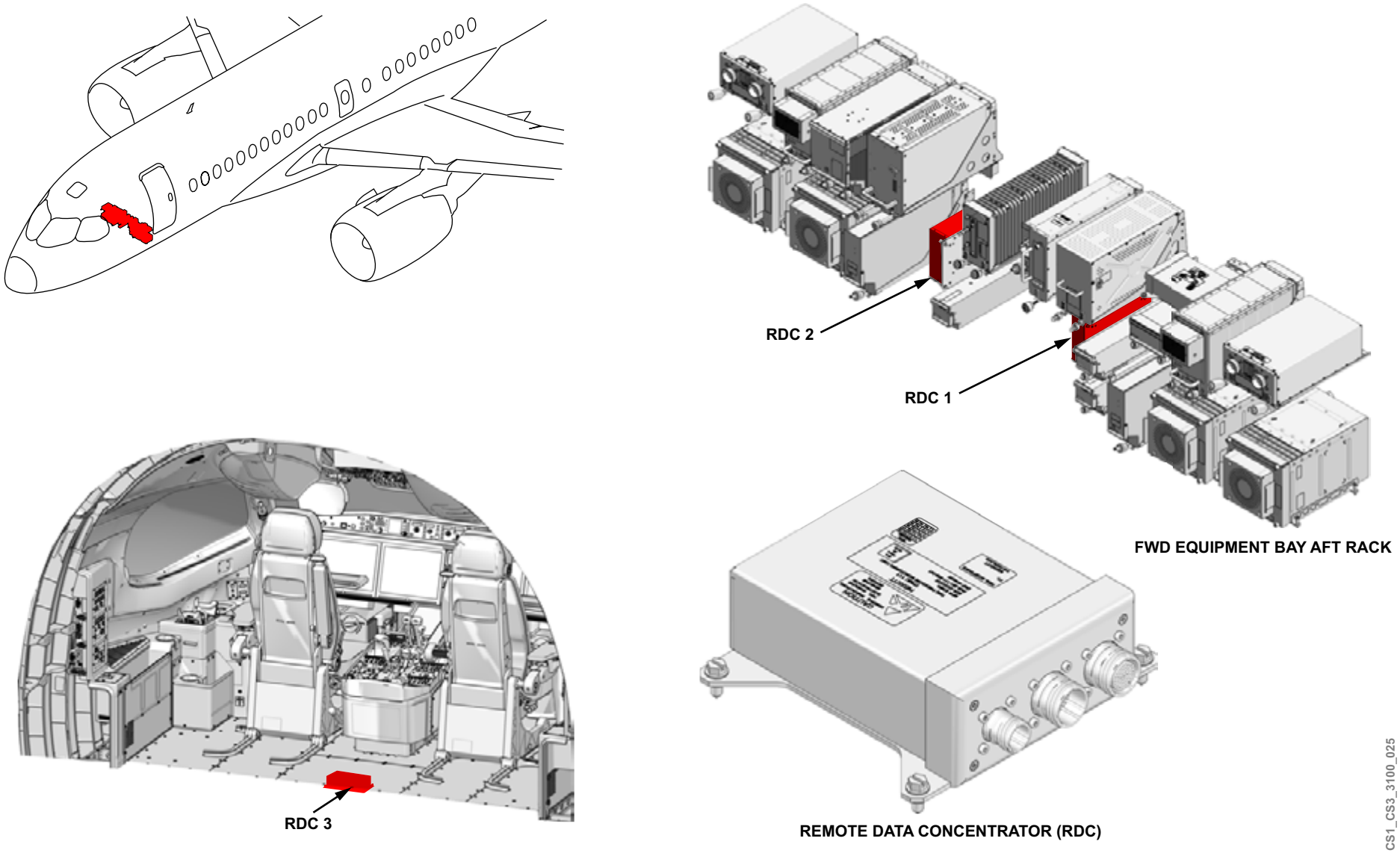

Figure 6: ICCP Component Locations - Remote Data Concentrators

Copyright © Bombardier Inc.

DETAILED DESCRIPTION

The overhead control panels are combined into a single integrated overhead panel assembly. The overhead panel assembly consists of six panel modules:

- ENGINE and APU FIRE panel
- LEFT OUTBOARD panel module
- LEFT INBOARD panel module
- RIGHT INBOARD panel module
- RIGHT OUTBOARD panel module
- EYEBROW panel module

Panel switch selections are routed to the associated system using panel interface modules (PIMs), direct hardwiring, or a combination of both. PIMs read and process switch positions, and load the data on a controller area network (CAN) BUS. Panel switches connected to the PIMs provide outputs to each of the three PIM channels.

The RDC receives switch data from the PIMs over the three CAN BUS networks. Each RDC has a command and monitor architecture. The command logic performs the input/output monitoring and processing functions. The command logic performs voting of the switch data from the three CAN BUS networks, and sends the resulting switch data to the DMC via an ARINC 429 BUS. The monitor logic receives the same data as the command logic, but uses the data to verify the operation of the command logic.

The three CAN BUSES each have a termination resistor. These resistors are used to load the CAN BUS signal and prevent signal bounce, or reflection. The termination resistors are located near the ICCP:

- R8 at fuselage station (FS) 363
- R9 at FS 347
- R10 at FS 359

The ICCP can isolate the following fault conditions:

- ICCP line replaceable unit (LRU) hardware failures
- ICCP switch hardware failures
- Broken CAN BUS wires
- Loss of ARINC429 BUS from DMC

The ICCP monitors switches for failures and faults. A fail message is reported through the onboard maintenance system (OMS) when the switch has completely failed. A fault message is generated in the OMS service menu when a switch has lost redundancy but continues to operate normally.

A CAS advisory message CONTROL PANEL FAULT is displayed for:

- PIM failure
- Panel failure for panels with PIMs installed
- RDC failure
- Overhead panel module channel failure including loss of redundancy

All built-in-testing is carried out at system power-up and by continuous monitoring during operation. There is no capability to manually initiate a test of the ICCP system.

Copyright © Bombardier Inc.

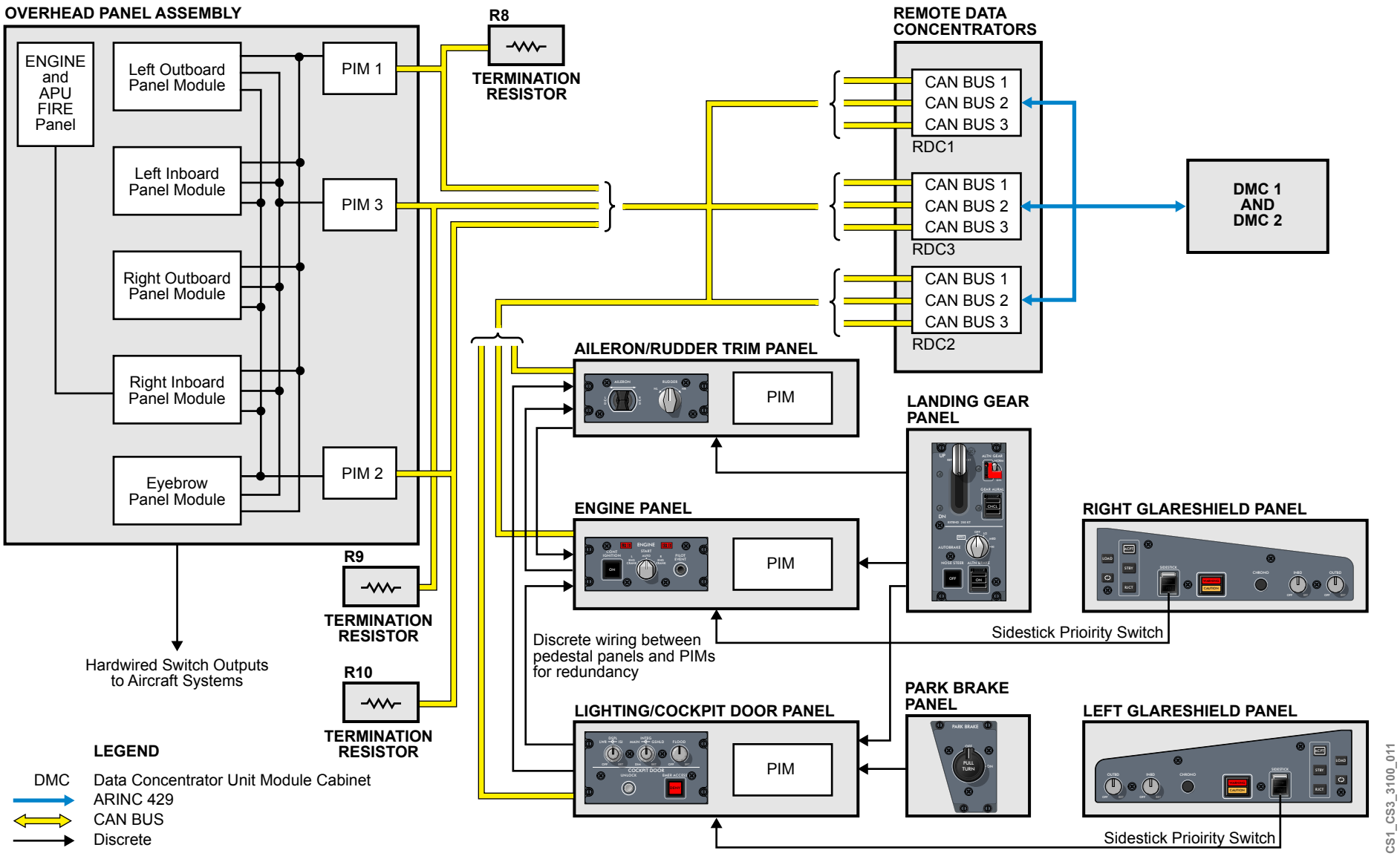

Figure 7: ICCP Operation

ICCP PANEL INTEGRAL LIGHTING

The aircraft is provided with four integral lighting zones for variable dimming of panel backlighting.

Lighting levels are provided to those panels with panel interface modules (PIMs). Integral lighting control for the remaining panels is provided by a 5 V pulse width modulation (PWM) supply from each remote data concentrator (RDC). The failure of an RDC results in loss of integral lighting for control panels in the affected zone.

Panel brightness control is provided by several potentiometer controls located on the pedestal and overhead panels.

Zone 1 Integral Lighting

Zone 1 panel integral lighting is controlled by the concentric potentiometer labeled INTEG - MAIN/GSHLD.

The outer MAIN knob provides integral lighting control for zone 1 panels as follows:

- Center pedestal panels
- Main instrument panel
- Left and right side panels

Copyright © Bombardier Inc.

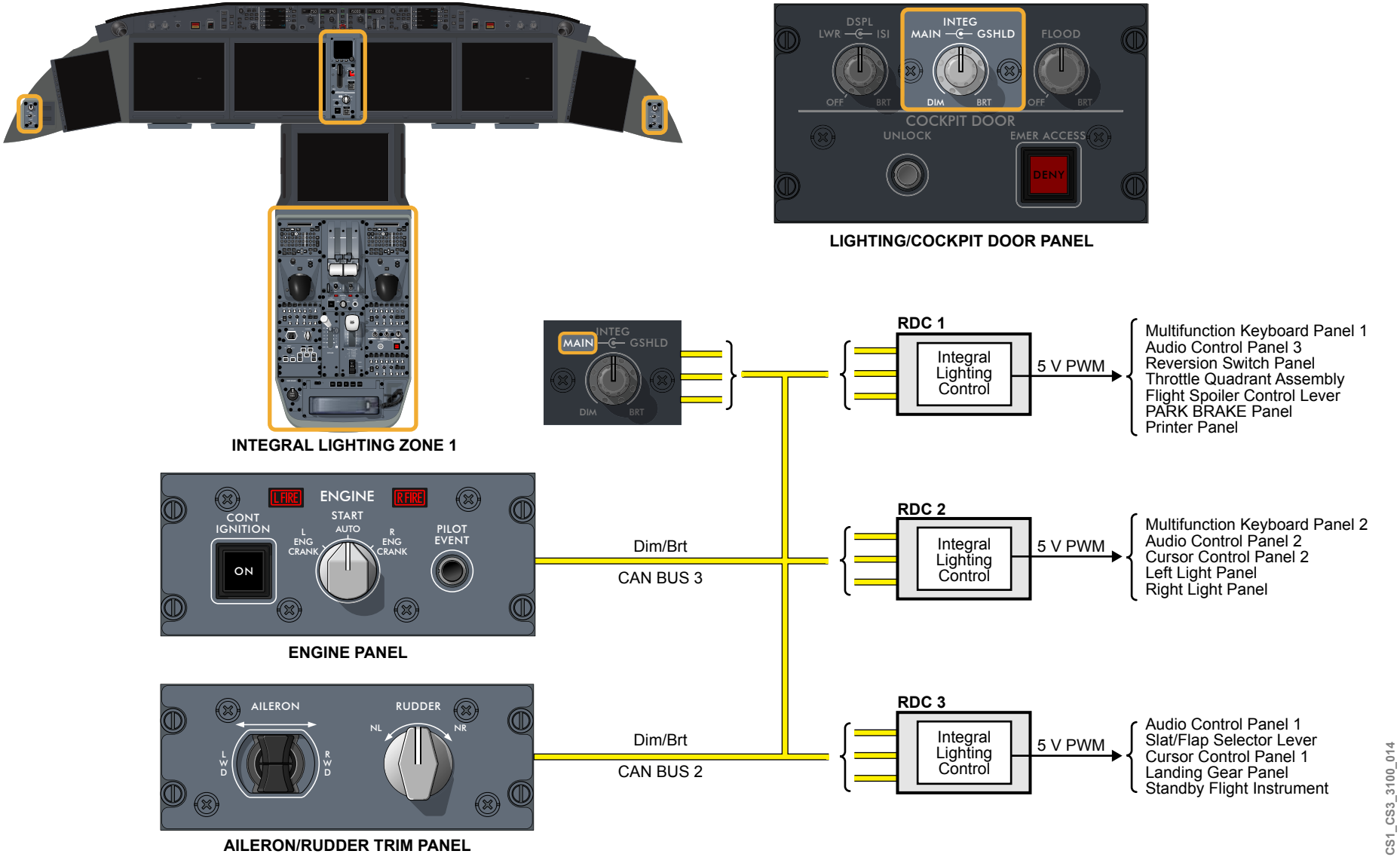

Figure 8: Integral Lighting Operation Zone 1

Zone 2 Integral Lighting

The inner GSHLD knob provides integral lighting control for the zone 2 panels as follows:

- Left and right glareshield panels
- Left and right control tuning panels
- Flight control panel

INTEGRAL LIGHTING ZONE 2

LIGHTING/COCKPIT DOOR PANEL

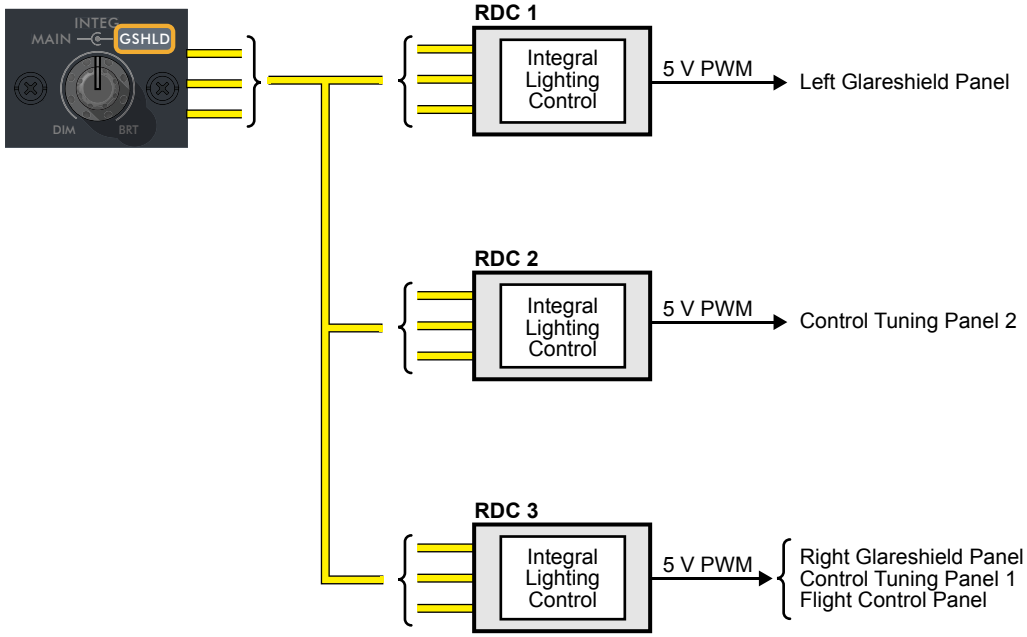

CS1_CS3_3100_015

Figure 9: Integral Lighting Operation Zone 2

Zone 3 Integral Lighting

The zone 3 panel integral lighting is controlled by the OVHD INTEG potentiometer, located on the left outboard overhead panel. The DIM-BRT selection provides integral lighting control for the:

- Overhead panel
- Magnetic compass

Copyright © Bombardier Inc.

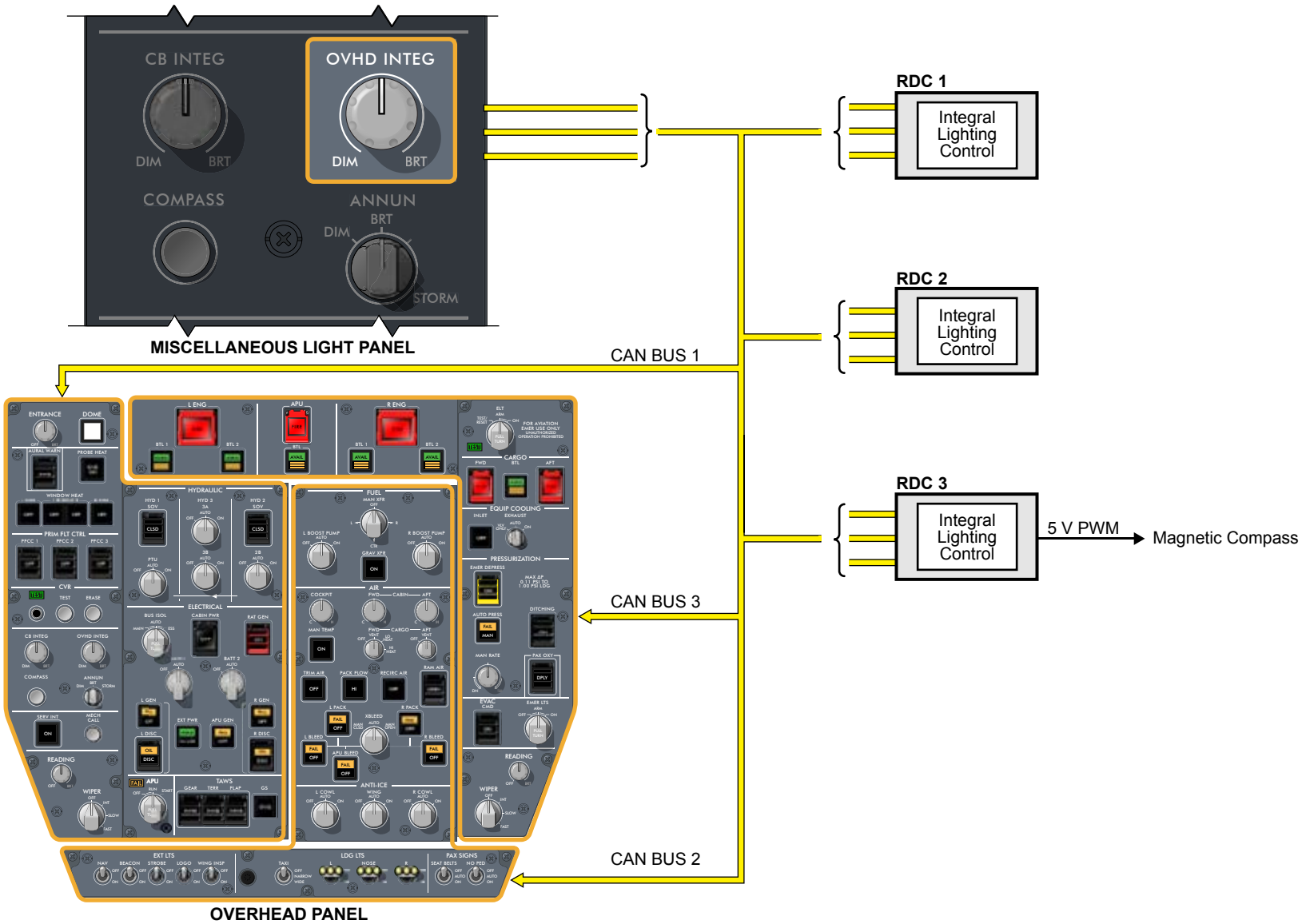

Figure 10: Integral Lighting Operation Zone 3

Zone 4 Integral Lighting

The zone 4 panel integral lighting is controlled by the CB INTEG potentiometer, located on the left outboard overhead panel. The DIM-BRT selection provides integral lighting control for the left and right circuit breaker panels.

Copyright © Bombardier Inc.

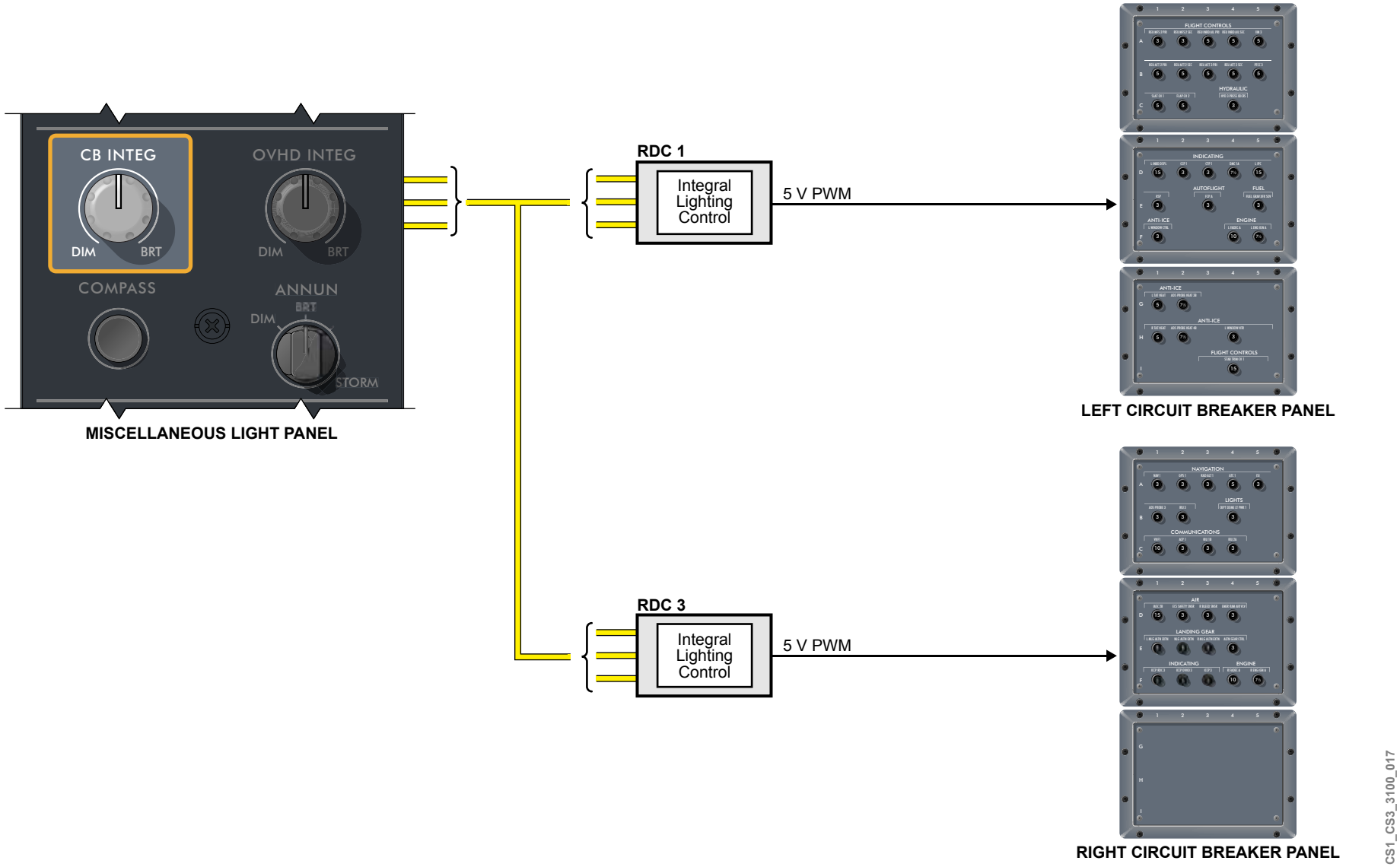

Figure 11: Integral Lighting Operation Zone 4

MONITORING AND TESTS

PANEL ANNUNCIATORS - ANNUNCIATOR TEST

The lamp test is initiated from the AVIONIC synoptic page. When the LAMP test is initiated, a cyan IN PROG message appears next to the LAMP virtual switch.

The LAMP test lasts 20 seconds and illuminates the annunciators bright or dim depending on the ANNUN switch position. When the test is complete, the annunciators return to their previous status and a white DONE message appears next to the LAMP virtual switch.

Copyright © Bombardier Inc.

GLARESHIELD PANEL

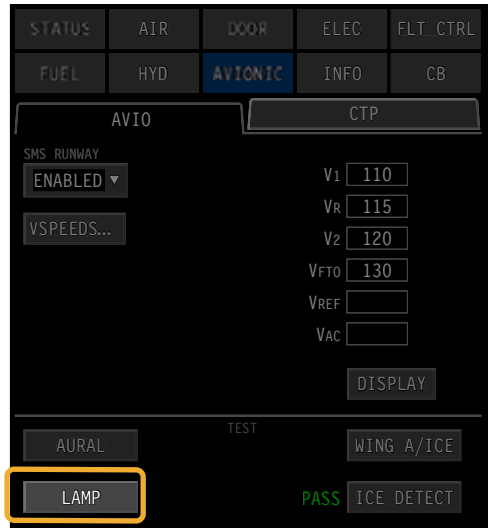

SYNOPTIC PAGE - AVIONIC

OVERHEAD PANEL

PEDESTAL

CS1_CS3_3100_019

Figure 12: Lamp Test

CAS MESSAGES

The following page provides the crew alerting system (CAS) messages for the instruments and control panels.

Table 1: ADVISORY Message

MESSAGE	LOGIC
CONTROL PANEL FAULT	Loss of redundant or non-critical function for the ICCP system.

Table 2: INFO Messages

MESSAGE	LOGIC
31 CTRL PANEL FAULT - OVRHD PIM 1 INOP	PIM 1 failed.
31 CTRL PANEL FAULT - OVRHD PIM 2 INOP	PIM 2 failed.
31 CTRL PANEL FAULT - OVRHD PIM 3 INOP	PIM 3 failed.
31 CTRL PANEL FAULT - OVRHD L OUTBD 2 OF 3 CHAN INOP	2 interface channels failed in overhead left outboard module.
31 CTRL PANEL FAULT - OVRHD L INBD 2 OF 3 CHAN INOP	2 interface channels failed in overhead left inboard module.
31 CTRL PANEL FAULT - OVRHD R OUTBD 2 OF 3 CHAN INOP	2 interface channels failed in overhead right outboard module.
31 CTRL PANEL FAULT - OVRHD R INBD 2 OF 3 CHAN INOP	2 interface channels failed in overhead right inboard module.
31 CTRL PANEL FAULT - TRIM PANEL PIM INOP	PIM in trim panel failed.
31 CTRL PANEL FAULT - OVRHD EYEBROW 2 OF 3 CHAN INOP	2 interface channels failed in overhead eyebrow module.
31 CTRL PANEL FAULT - ENGINE PANEL PIM INOP	PIM in engine panel failed.
31 CTRL PANEL FAULT - OVRHD EYEBROW 3 OF 3 CHAN INOP	When there is a loss of all channels within the overhead panel eyebrow, the caution message is displayed.

Table 2: INFO Messages

MESSAGE	LOGIC
31 CTRL PANEL FAULT - LIGHTING PANEL PIM INOP	PIM in lighting/door panel failed.
31 CTRL PANEL FAULT - OVRHD L OUTBD PANEL INOP	When there is a loss of all channels within the left outboard panel the Info message is displayed.
31 CTRL PANEL FAULT - OVRHD L INBD PANEL INOP	When there is a loss of all channels within the left inboard panel the Info message is displayed.
31 CTRL PANEL FAULT - OVRHD R OUTBD PANEL INOP	When there is a loss of all channels within the right outboard panel the Info message is displayed.
31 CTRL PANEL FAULT - OVRHD R INBD PANEL INOP	When there is a loss of all channels within the right inboard panel the Info message is displayed.
31 CTRL PANEL FAULT - OVRHD PANEL INOP	All three PIMs failed. There are no overhead panel module INFO messages, as the overhead PIMs provide monitoring of the overhead panel modules. This message is masked if all three RDCs have failed.
31 CTRL PANEL FAULT - OVRHD AND ENGINE PANEL INOP	All three RDCs have failed or there is no data from all three RDCs.
31 CTRL PANEL FAULT - RDC 1 INOP	RDC 1 failed or loss of data from RDC 1 when DC ESSENTIAL BUS 1 is available.
31 CTRL PANEL FAULT - RDC 2 INOP	RDC 2 failed or loss of data from RDC 2 when DC BUS 2 is available.
31 CTRL PANEL FAULT - RDC 3 INOP	RDC 3 failed or loss of data from RDC 3 when DC ESSENTIAL BUS 3 is available.

Copyright © Bombardier Inc.

31-20 INTEGRATED CLOCK SYSTEM

GENERAL DESCRIPTION

The integrated clock system, located in data concentrator unit module cabinet (DMC) 1 and DMC 2, provides master time and date information to the aircraft systems. Clock information is shown on the primary flight display (PFD) and the control tuning panel (CTP) CLOCK page.

When the aircraft is powered up, DMC 1 and DMC 2 use a common time source. The time and date information is updated automatically using information from one of the sources in the following order of priority:

- GNSS 1
- GNSS 2
- Manual time entry
- Default time

If the global navigation satellite system (GNSS) information is not available, the integrated clock system default time of 00:00:00 and default date of 01 JAN 2000 is displayed.

CONTROL TUNING PANEL CLOCK PAGE

The CLOCK page is selected from the top MENU page. The following information is displayed on the page:

- Time in universal time coordinated (UTC) format
- Date
- Local time at originating airport
- Local time at destination airport
- TIME ALOFT

TIME ALOFT indicates the actual flight time, from takeoff to landing. The TIME ALOFT resets to 00:00 and begins counting when the aircraft weight-on-wheels (WOW) signal indicates the aircraft is in the air. The time stops counting 30 seconds after the aircraft WOW signal indicates the aircraft is on the ground.

PRIMARY FLIGHT DISPLAY

The UTC time, date, and chronometer (CHRONO) are displayed on the PFD. The UTC time and date are displayed at all times. The chronometer is only displayed when the CHRONO button on the GLARESHIELD panel is pressed.

Copyright © Bombardier Inc.

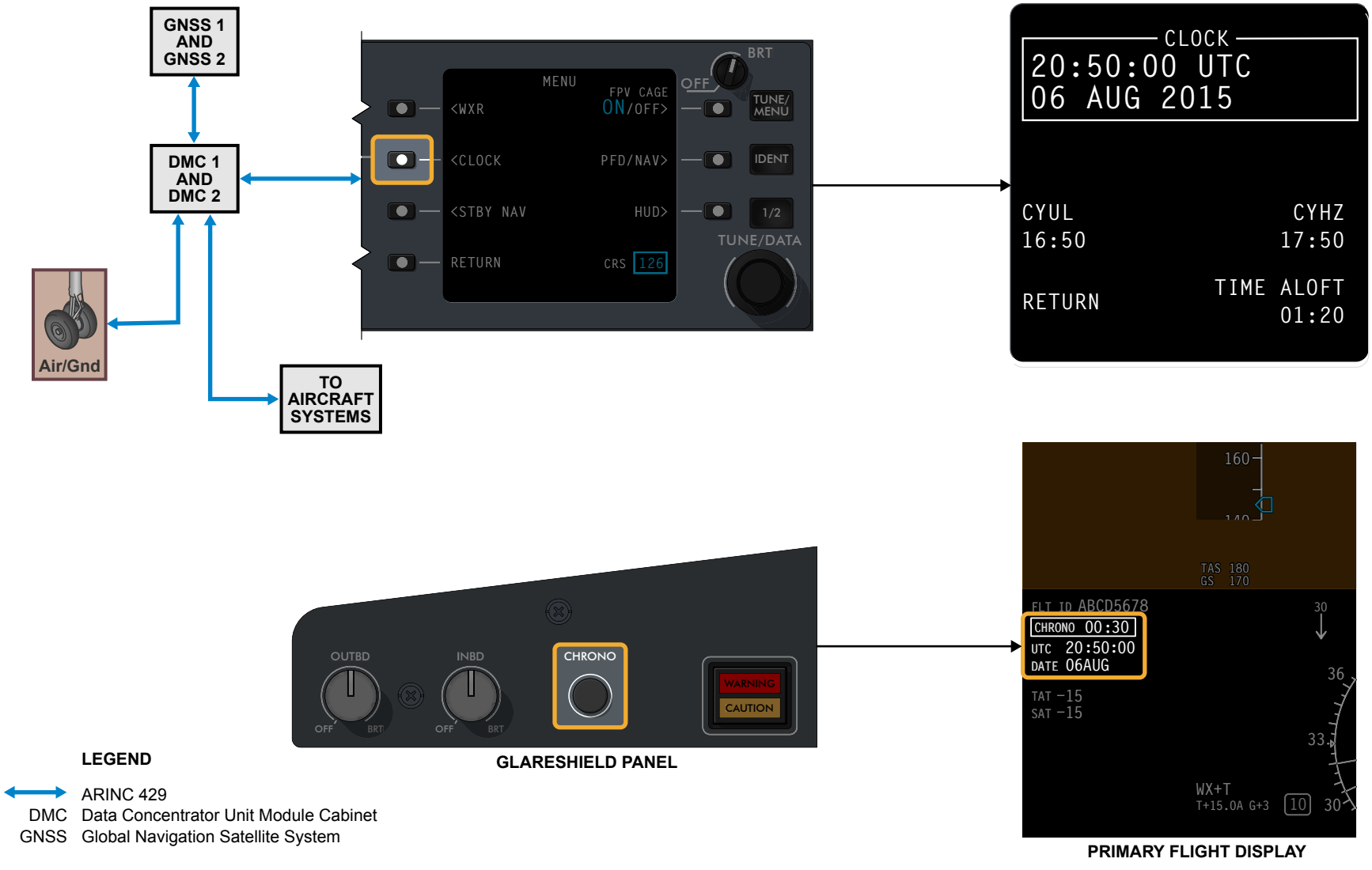

Figure 13: Integrated Clock System

PRACTICAL ASPECTS

SETTING THE CLOCK

To set the time manually:

1. From top menu, press TUNE/MENU once
1. Press LSK 2, to bring up the CLOCK page
2. If MANUAL TIME is displayed, press line select key 1
3. Press LSK 1 to start manual time update
4. Rotate the outer ring of the TUNE/DATA knob to move the focus indicator
5. Rotate the inner knob to increase or decrease the time and date values
6. Press LSK 1 to store the new time setting

NOTE

If the GNSS signal is not available, for example when the aircraft is in a hangar, the clock reverts to the default date. Software loading is not possible until the time and date are manually entered.

Copyright © Bombardier Inc.

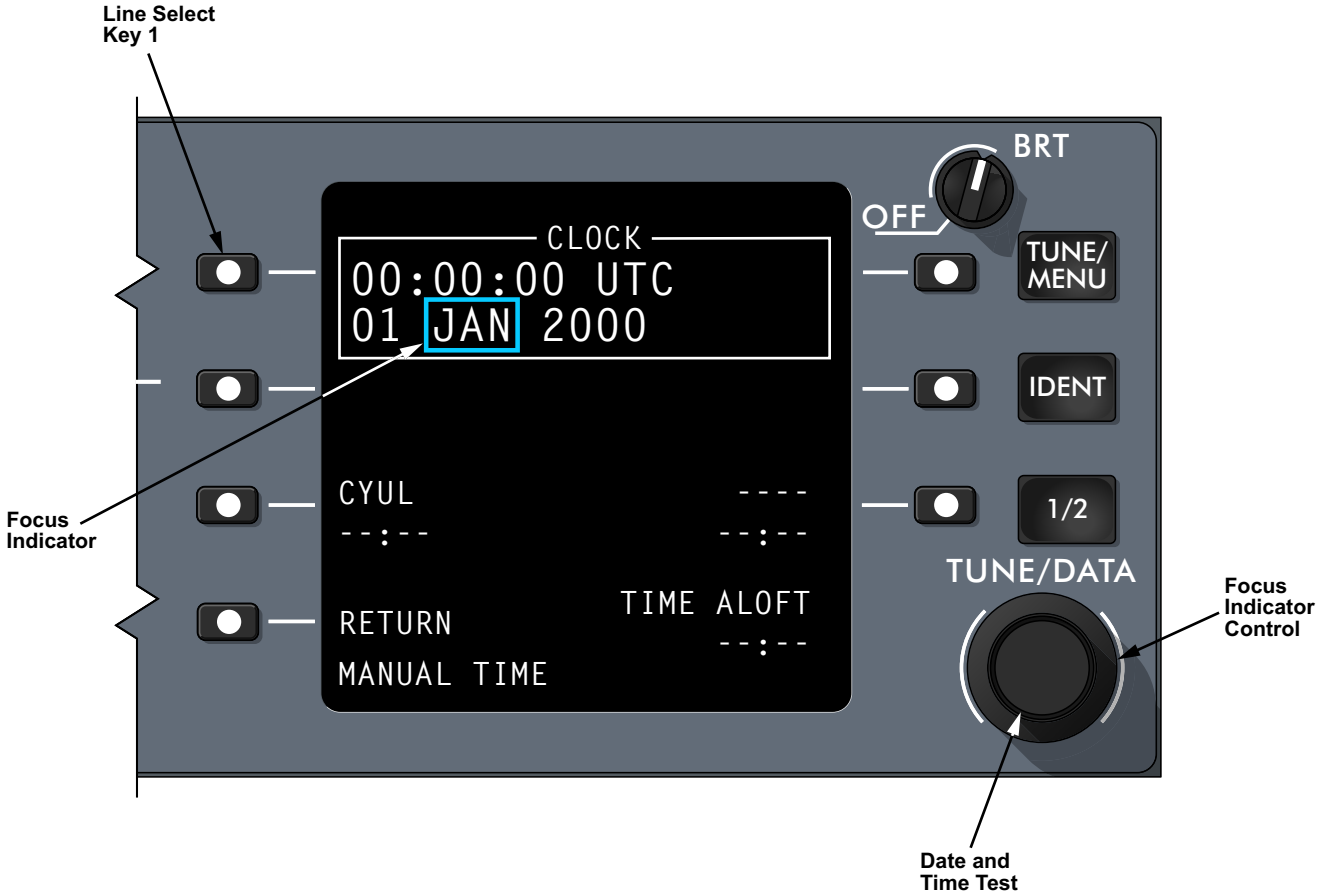

CS1_CS3_3120_002

Figure 14: Setting the Clock

31-40 INTEGRATED AVIONICS PROCESSING

GENERAL DESCRIPTION

The integrated modular avionics (IMA) system provides centralized computing and communications capability. The IMA uses a number of specialized avionic applications which share input/output processing, memory, and computing resources.

The software applications are loaded on common hardware modules housed within several cabinets. An advanced communications protocol and real-time network architecture makes the IMA a robust installation with provisions for options and system growth.

The common hardware modules provide a partitioned environment allowing the sharing of computing resources and physical hardware by several applications.

The avionics integrated processing system (IPS) is comprised of the four integrated processing cabinets (IPCs) housing interface modules, digital switching modules, and common computing modules. The system consolidates and routes avionic and system data to the display units via the AFDX network.

The IPS hosts the software for a number of avionic functions housed on a number of line replaceable modules. The systems include:

- Data collection/distribution
- Local area network/switching
- Flight management system (FMS)
- Onboard maintenance system (OMS)
- Data link/controller-pilot data link communications (CPDLC)
- Terrain awareness and warning system (TAWS) terrain data and processing

The data concentration system (DCS) includes two, dual-channel data concentrator unit module cabinets (DMCs). Each cabinet is designed to host various independent, functional software applications including:

- Flight guidance
- Engine indication and crew alerting system
- Autothrottle

The two aircraft personality modules (APMs) serve as memory devices for the input/output concentrator functions of the DMCs. They contain data that is specific to the aircraft. This includes information relating to:

- Configurations and options
- Electronic TSO nameplate data and settings
- Application keys (APM 1 only)

Other inputs into the display units (DUs) are:

- Cursor control panels (CCPs)
- Multifunction keyboard panels (MKPs)
- Reversion switch panel (RSP)
- Full authority digital engine control (FADEC)
- Aircraft system data

Copyright © Bombardier Inc.

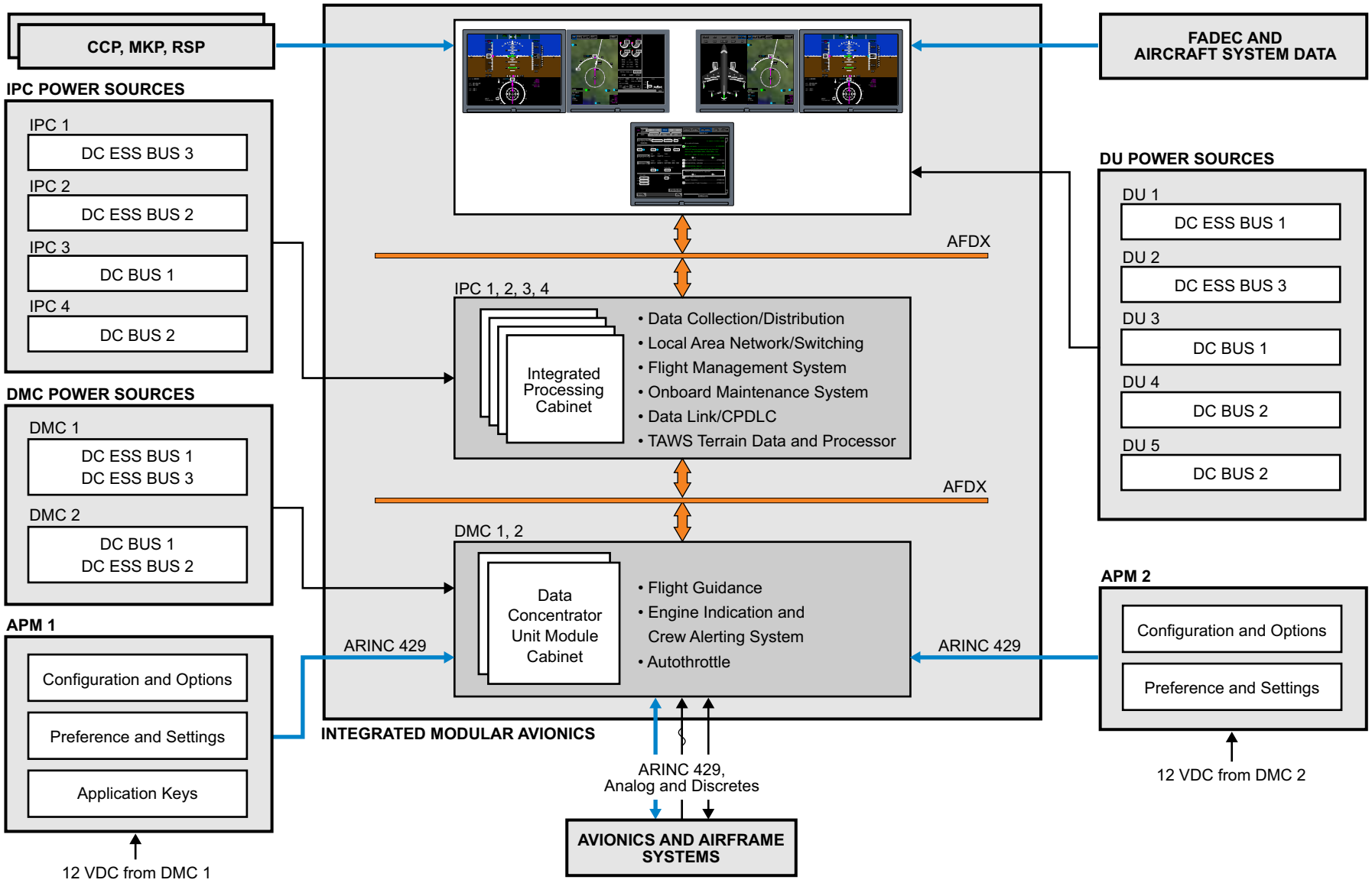

Figure 15: Integrated Modular Avionics Architecture

Copyright © Bombardier Inc.

COMPONENT LOCATION

Components of the integrated modular architecture include:

- Integrated processing cabinets (IPC 1, IPC 2, IPC 3, IPC 4)
- Data concentrator unit module cabinets (DMC 1, DMC 2)
- Aircraft personality modules (APM 1, APM 2)

Copyright © Bombardier Inc.

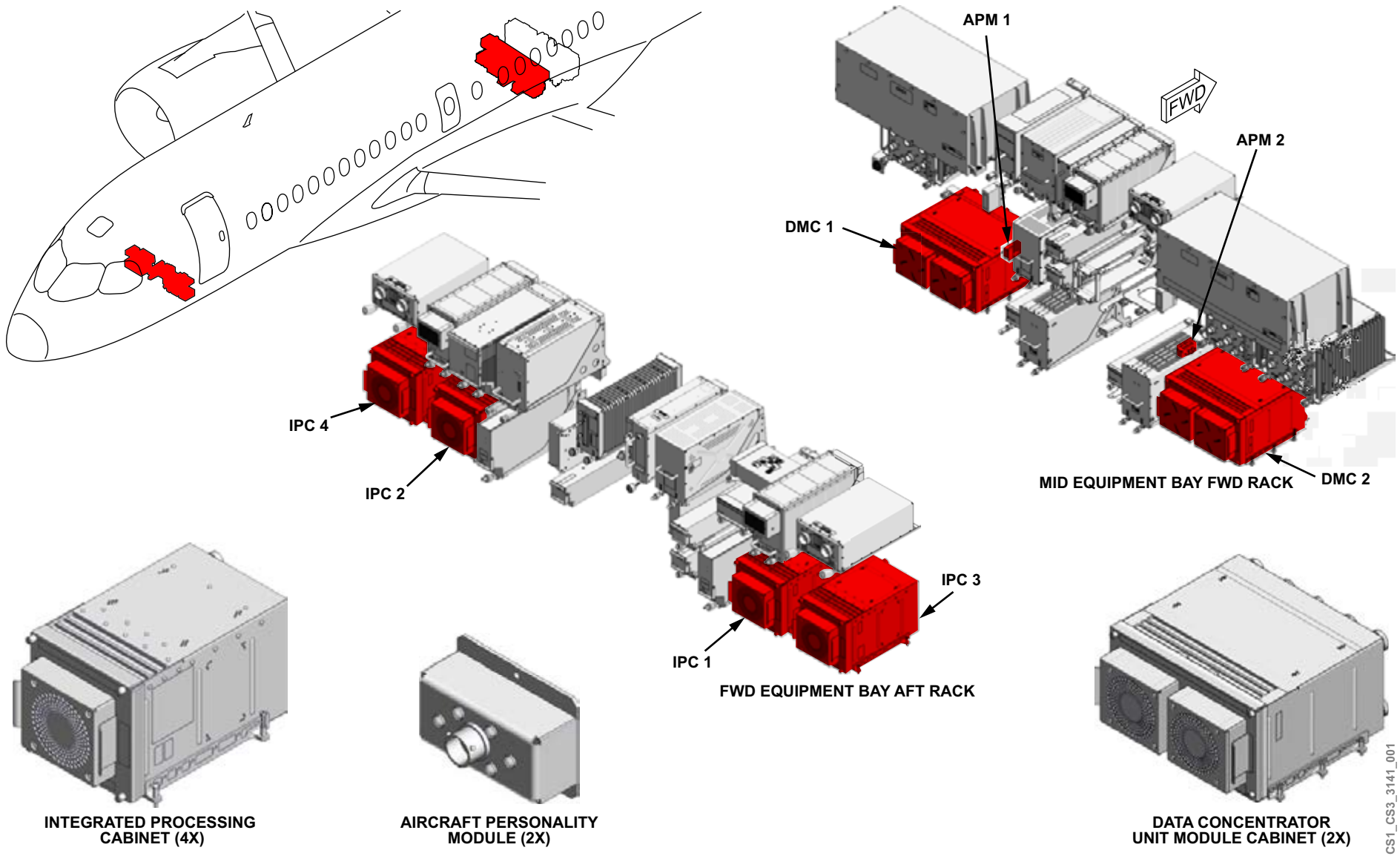

Figure 16: Avionics Processing Components

COMPONENT INFORMATION

DISPLAY UNITS

The display units (DUs) provide a high-resolution display of flight and system graphics and data. The DUs are LCD type and are 15 in. high.

Each DU is installed in a mounting tray equipped with two cooling fans powered by a 12 VDC source from the associated display unit. The fans are automatically controlled by temperature sensors, and operate in a low, variable, or high airflow setting. The fans blow cooling airflow upward, through the unit, and the air is extracted at the top. There are no filters installed in the cooling circuit.

An internal current monitoring circuit stops fan operation in the event of a sensed overcurrent condition.

The display unit has field loadable software.

NOTE

Clean the display unit screen with a soft lint free cloth and IPA only. Paper tissue can damage the optics.

Copyright © Bombardier Inc.

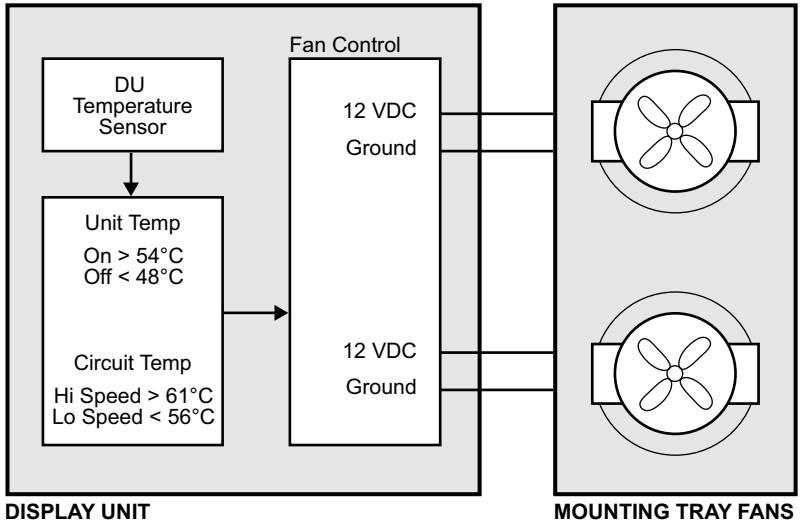

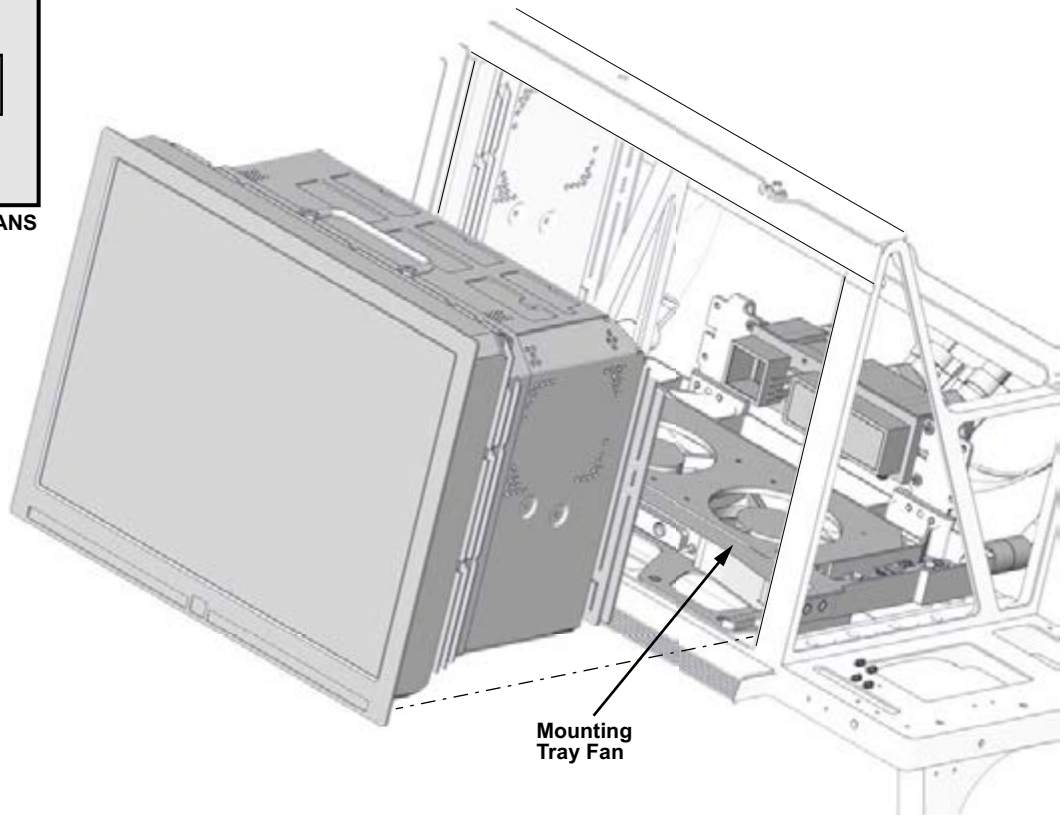

Figure 17: Display Unit Installation

INTEGRATED PROCESSING CABINETS

The four integrated processing cabinets are mounted on the equipment racks with external mounting hardware. Rear connectors provide the cabinet to aircraft interface. Line replaceable modules (LRMs) are installed on guide rails and mate to the rear backplane.

Each of the four integrated processing cabinets accommodate several LRMs for consolidating and concentrating system data.

The cabinets provide the power distribution, communications interface, and environmental control for the resident modules. Chassis cooling is provided by the detachable front fan module.

The backplane provides the interconnects between the modules and the external systems, by using several circular connectors. The cabinet has provisions for fiber-optic cables for use when the optional head-up display (HUD) is selected. A blanking plate covers the opening when the HUD option is not installed.

The individual modules are line replaceable, secured in individual guiding rails, and locked in place with upper and lower levers.

Copyright © Bombardier Inc.

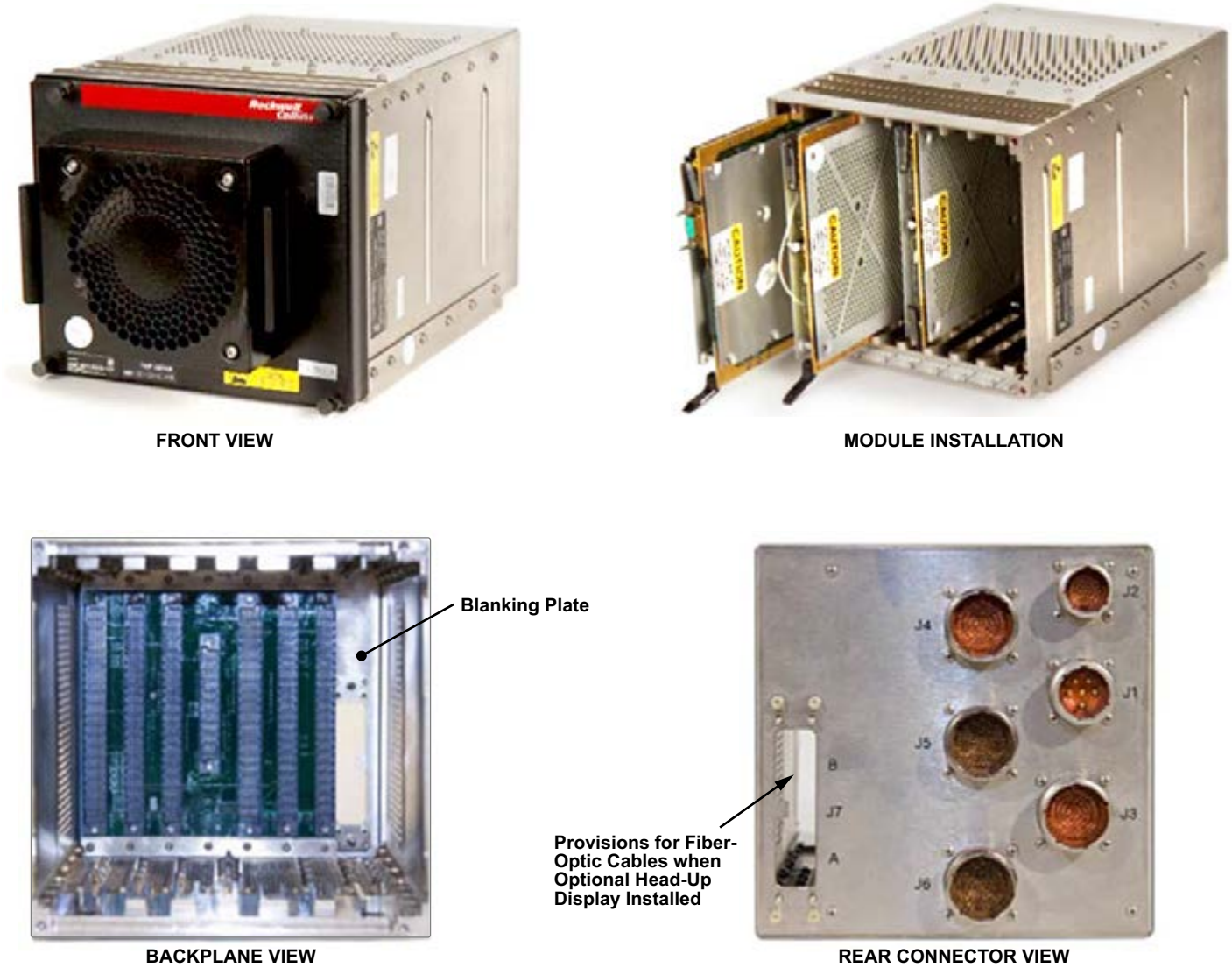

Figure 18: Integrated Processing Cabinet

DATA CONCENTRATOR UNIT MODULE CABINETS

Each of the two data concentrator unit module cabinets (DMCs) accommodates several line replaceable modules (LRMs). A fixed partition provides a separation of the DMC into a channel A and channel B.

The cabinets provide the power distribution, communications interface, and environmental control for the resident modules. Chassis cooling is provided by two detachable front fan modules, one for each channel.

The backplane provides the interconnects between the modules and external systems using several circular connectors.

Copyright © Bombardier Inc.

FRONT VIEW

MODULE INSTALLATION

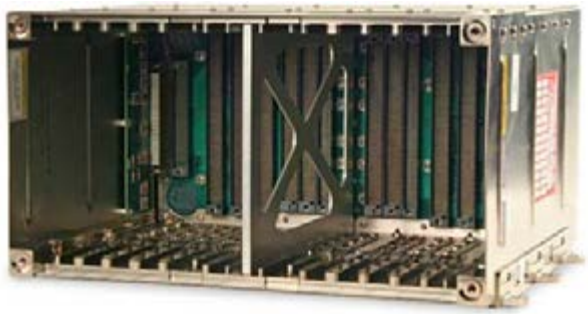

BACKPLANE VIEW

REAR CONNECTOR VIEW

CS1_CS3_3140_029

Figure 19: Data Concentrator Unit Module Cabinet

Copyright © Bombardier Inc.

DETAILED DESCRIPTION

DISPLAY UNIT INTERFACE

Each display unit (DU) receives input from and provides output to, a number of system controllers, computers, and panels.

Data processed by the integrated processing cabinets (IPCs) is routed by the AFDX network to all display units. This includes TAWS, EICAS synoptic, maps and chart data.

All display units show information received via ARINC 429 data bus input from:

- Weather radar system
- Inertial reference system (IRS)
- Air data system (ADS)
- Electronic engine control (EEC)
- Primary flight control computers (PFCCs)
- Traffic surveillance system (TSS)
- Flight control panel (FCP)
- Control tuning panels (CTPs)
- Cursor control panels (CCPs)

Health and operational status is routed between each DU via ARINC 429 input. A window manager function in the DU automatically reconfigures the display in the event of another DU failure. This input is also used for the display comparator functions.

The weather radar system provides ARINC 708 weather data for display to the DUs.

The DUs receive other discrete and analog inputs from or for the following:

- RA display status
- Display configuration
- Data load enable
- Display brightness control
- Chronometer select
- Reversion switch panel (RSP)
- Multifunction keyboard panel (MFK)
- Cursor control panels (CCP)
- Control tuning panels (CTP)

The flight deck door surveillance system provides a NTSC video signal to DU 3 and DU 5 only.

The DUs receive a discrete input from the landing gear system when the aircraft is on ground. This enables data loading to the DUs if required.

The DUs receive 28 VDC power input and provide 12 VDC output to the mounting fans.

Copyright © Bombardier Inc.

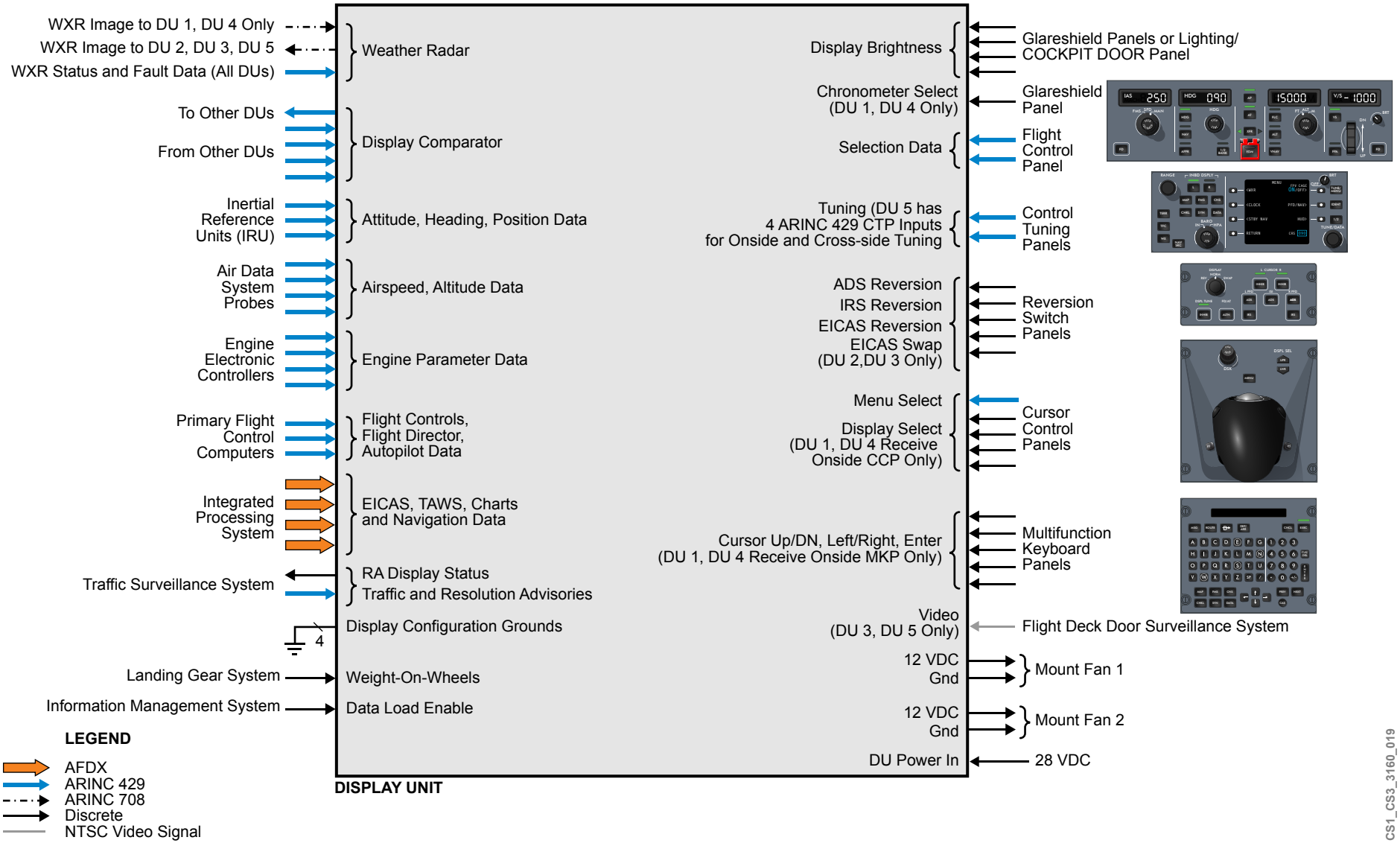

Figure 20: Display Unit Interface

INTEGRATED PROCESSING CABINETS

The integrated processing cabinets (IPCs) contain the following line replaceable modules (LRMs):

- Cover and environmental module (CEM)
- Power environment module
- Digital switching module (DSM)
- Common computing modules (CCMs)

Each module is constructed of one or more circuit cards, housed within a protective cover.

The cover and environmental module (CEM) and power environment module provide the required cooling and power for the cabinet.

The DSM carries out switching functions for the local area network (LAN), as well as routing data between supply and user systems.

The CCMs host several avionic applications, including the flight management system (FMS), onboard maintenance system (OMS), controller-pilot data link communications (CPDLC), and other functions.

The third IPC also contains the computing modules for the terrain awareness and warning system (TAWS) and optional head-up display (HUD) system. The fourth IPC is also designed for avionics growth and options such as a second head-up display (HUD) installation.

Copyright © Bombardier Inc.

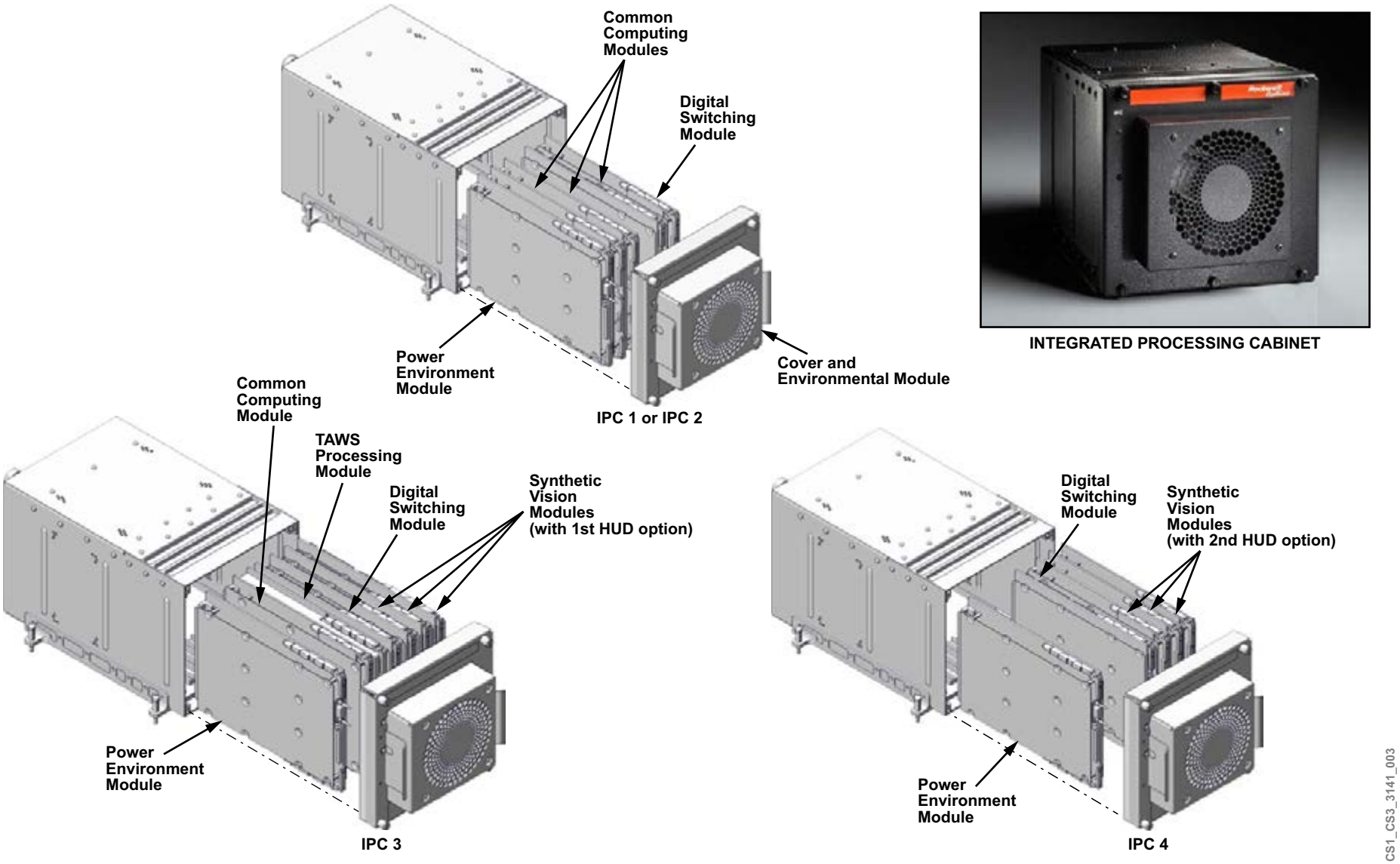

Figure 21: Integrated Processing Cabinet and Modules

Copyright © Bombardier Inc.

Cover and Environmental Module

The cover module includes an axial fan assembly attached to the front cover. Air is drawn in from above and below the IPC, and forced out through the front face of the module. The fan is powered and monitored by the power environment module (PEM). The fan wiring attaches to a front power environment module connector.

Power Environment Module

The power environment module (PEM) receives and converts aircraft supplied 28 VDC to a 12 VDC output to the cabinet backplanes. The PEM also receives, and processes, cabinet and system strapping data required for cabinet and individual module operation.

The PEM includes monitoring circuitry for fan operation and cabinet temperature control. The fan turns on when the cabinet temperature exceeds 24°C and turns off at 13°C.

If the IPC reaches 90°C, the power supply shuts off. After the unit cools, the power must be cycled to restore operation.

A crew alerting system (CAS) advisory message of AVIONIC FAULT FAN is issued should a fault be detected.

Copyright © Bombardier Inc.

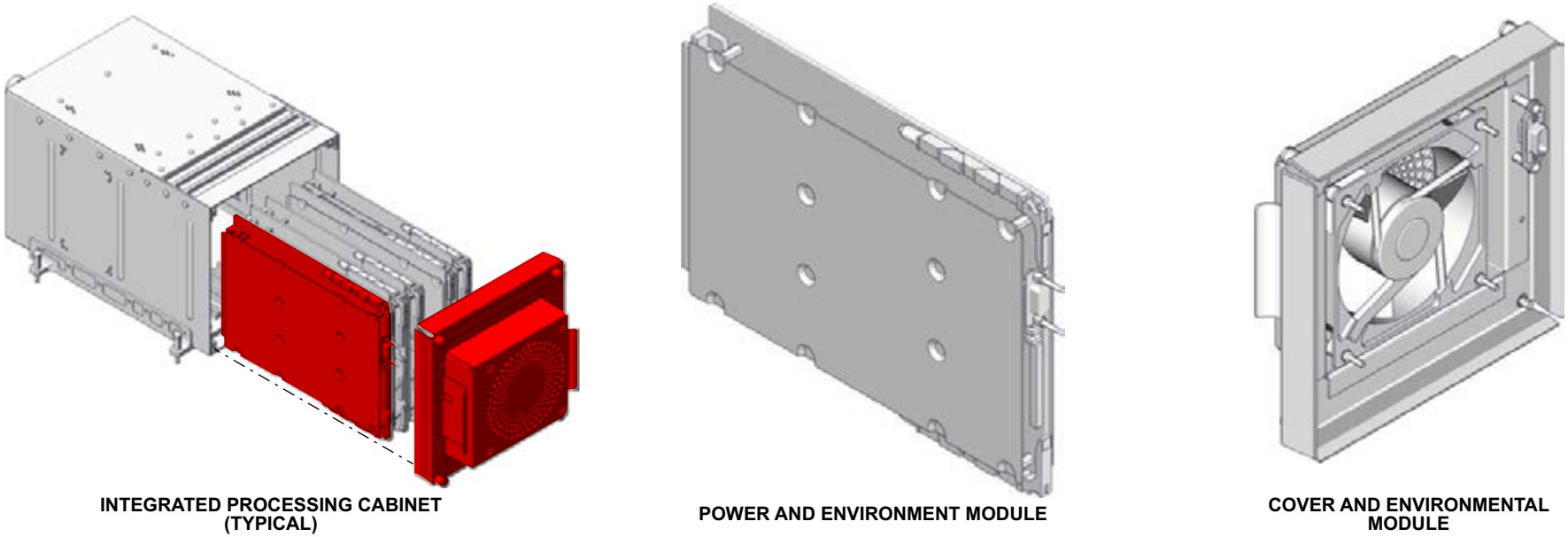

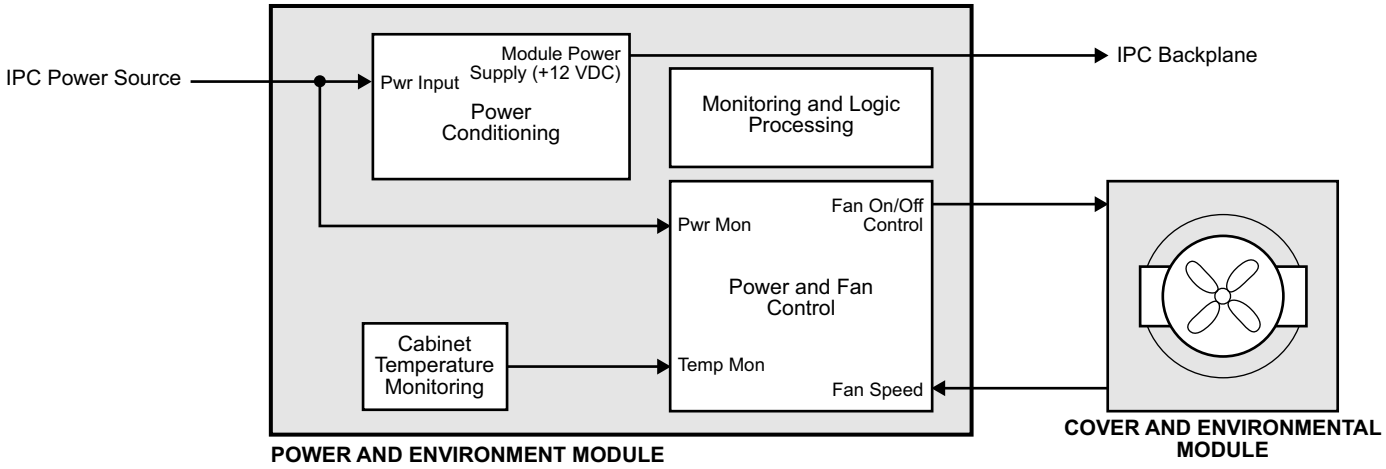

CS1_CS3_3140_017

Figure 22: Cover and Environmental and Power and Environment Modules

Copyright © Bombardier Inc.

IPC 1 and 2 Common Computing Modules

Each of the four IPS cabinets hosts a number of specific-purpose applications installed on common computing modules (CCMs). Each CCM is constructed of several cards housed within a protective cover and locking tabs.

IPC 1 and IPC 2 each include three CCMs. The CCM uses a real-time operating system hosting multiple applications and is equipped for Ethernet connectivity.

Each CCM is equipped with runtime software and configuration tables to manage processing resources, and to ensure a virtual partition between hosted applications. The software also includes a health monitoring function, which reports to the configuration manager and the onboard maintenance system (OMS) in the event of a CCM processing fault.

The CCM in slot no. 2 hosts the application for flight management system no.1. This includes several sub applications and files including the navigation database server, integrated CDU function, and the graphical flight planning functions. It also includes applications for the multifunction keyboard panel control. The CCM in IPC 1 hosts the software for the controller/pilot data link interface.

The CCM in IPC 1 slot no. 3 hosts the OMS application. The configuration manager receives hardware and software information from each module that has loadable software. The information is compared to the information that is stored in the aircraft personality module (APM) configuration table.

The application license manager processes application keys, which enable or disable optional avionics functions. Both the configuration manager application and application license manager are hosted in IPC 1 only. If this card fails, the optional avionics functions are not available.

If the CCM in IPC 1 slot no. 3 is replaced, the OMS is not available and the software must be loaded manually.

The CCM in slot no. 6 hosts the file server application controlling operation of the integrated flight information system, supporting the display of charts, weather data, and a document reader.

Copyright © Bombardier Inc.

IPC 1 (IPC 2 IDENTICAL)

INTEGRATED PROCESSING CABINET 1 AND 2

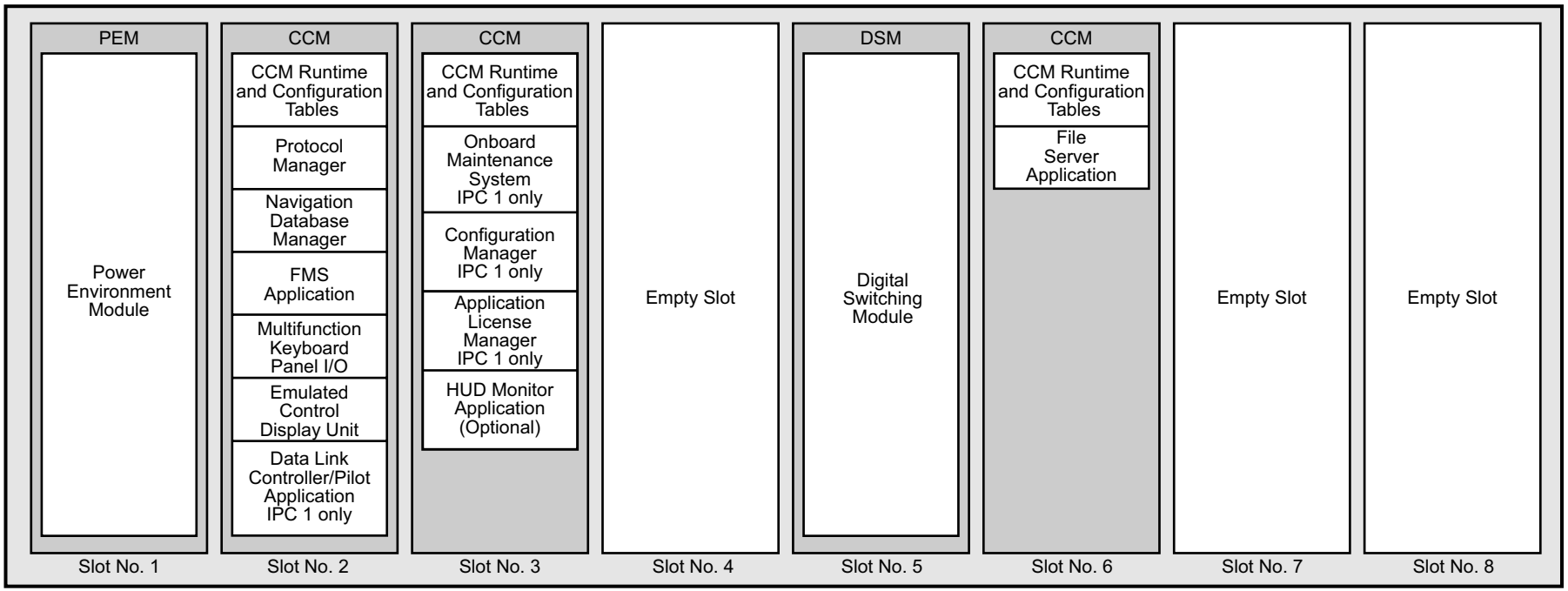

CS1_CS3_3140_024

Figure 23: IPC 1 and 2 - Common Computing Modules

IPC 3 and 4 Common Computing Modules

IPC 3 includes one common computing module (CCM). It is equipped with runtime software, configuration tables, and a high-resolution terrain database used by the terrain awareness and warning system (TAWS).

The TAWS processing module (TPM) hosts the TAWS application and a terrain database. The TAWS application is preloaded by the manufacturer.

IPC 3 and IPC 4 has provisions for installation of the optional synthetic vision module (SVM). The module is required when the head-up display (HUD) option is installed.

Copyright © Bombardier Inc.

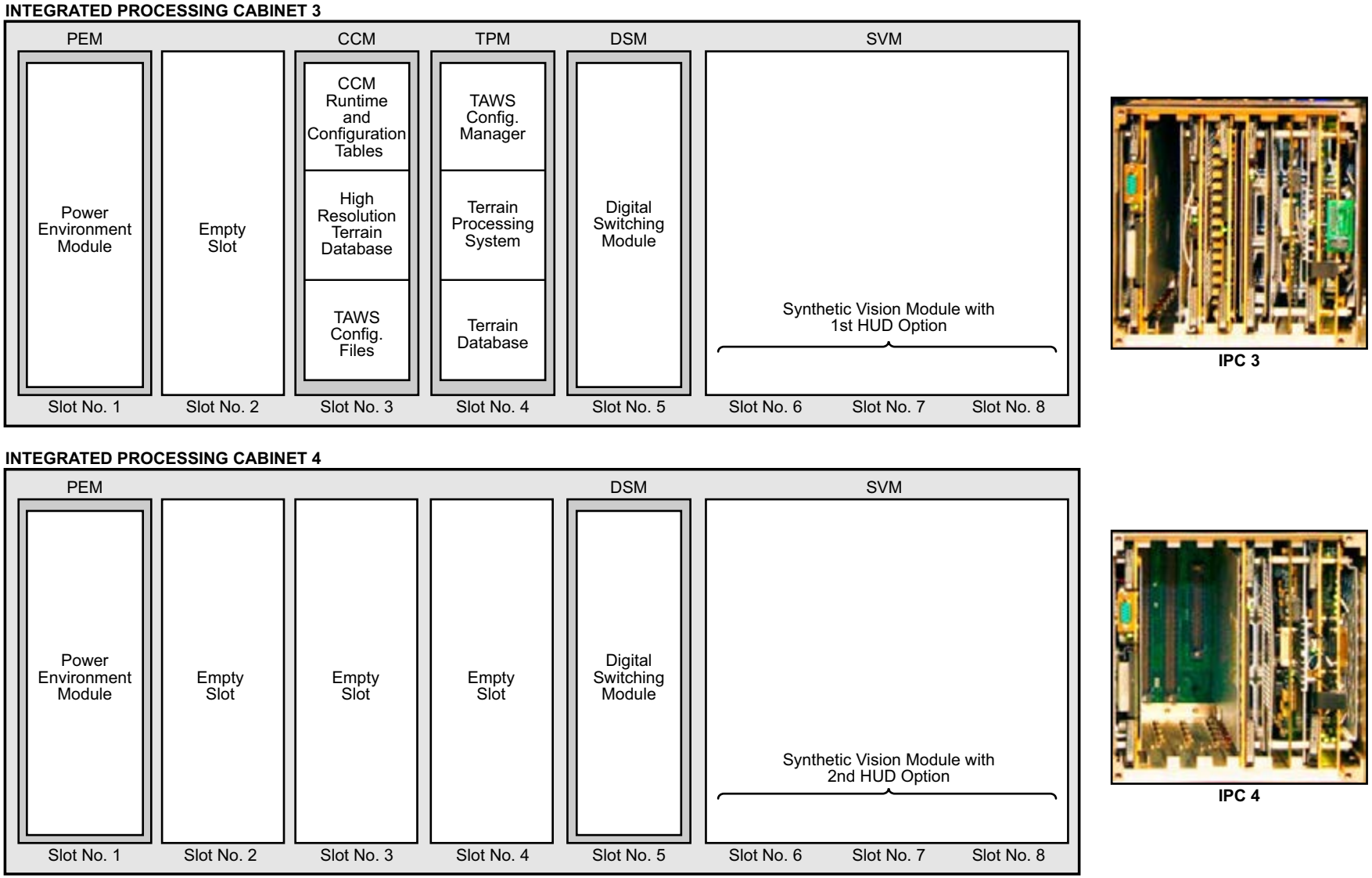

Figure 24: IPC 3 and 4 Common Computing Modules

Copyright © Bombardier Inc.

IPC 1 to 4 Digital Switching Module

The AFDX network uses digital switching modules (DSMs) to provide the virtual link or logical interconnect between cabinet line replaceable modules (LRMs) and external line replaceable units (LRUs).

The DSMs have the same software and are interchangeable. They are the first software to be loaded during an aircraft software load since they create the AFDX network.

These virtual links are created through routing of AFDX frames through digital switches on the network and are the major building block of the AFDX network. The DSM provides 24 port, 10/100 base T-Ethernet ports for routing packets of data or frames using a hub and spoke layout. The 24 ports are broken down as follows:

- Ports (4) reserved for internal common computing module (CCM) use
- Ports (2) for cross talk
- Ports (18) for external connections

Digital switches route a particular frame from a single source to a predetermined set of end systems, or nodes, according to a loaded forwarding table.

The DSMs are interchangeable between IPCs as long as the software is installed on the DSM.

Copyright © Bombardier Inc.

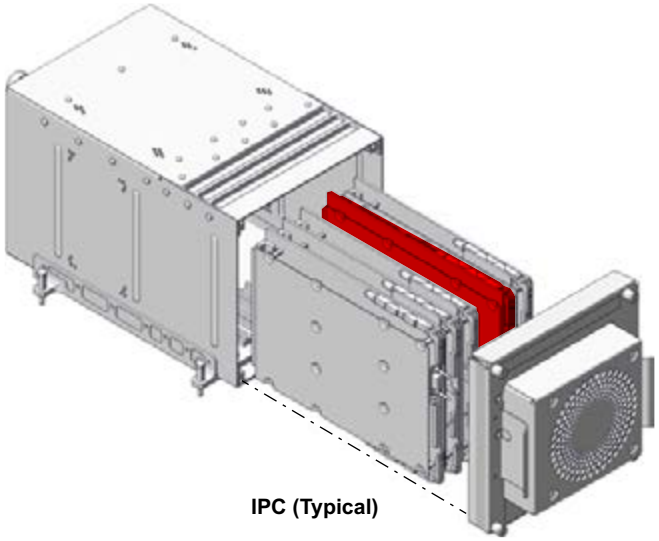

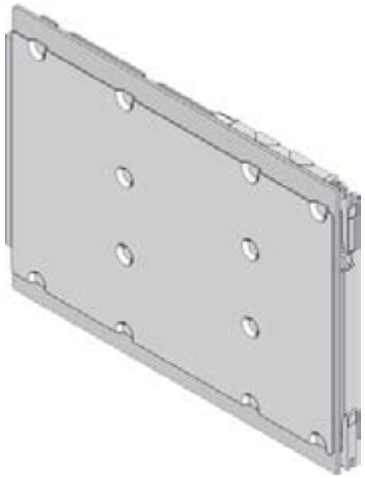

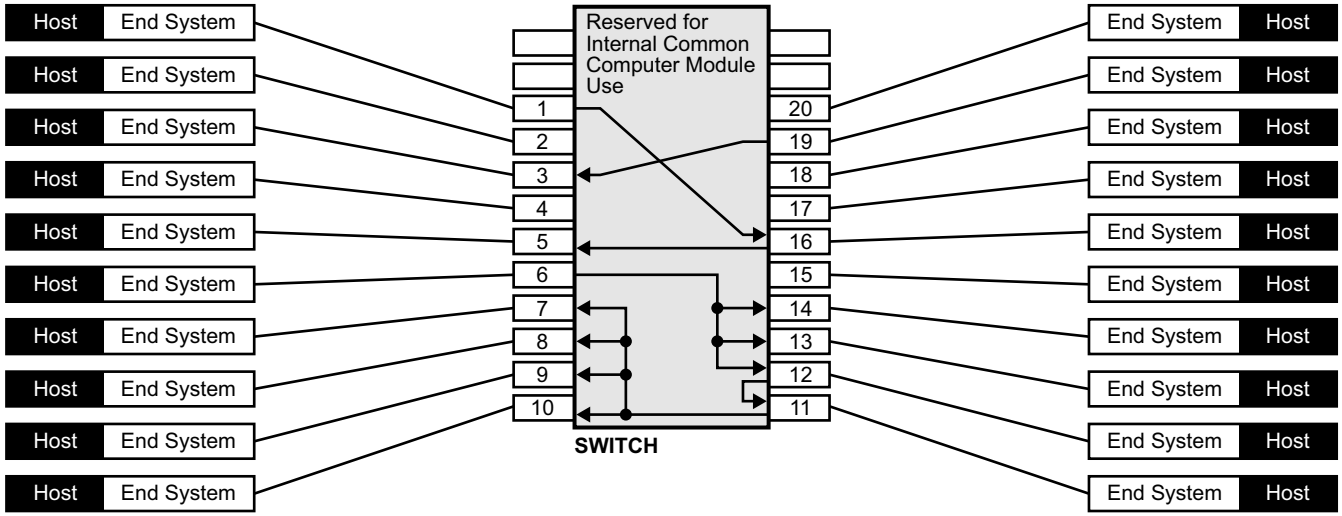

CS1_CS3_3141_019

Figure 25: IPC 1 to IPC 4 Digital Switching Module

Copyright © Bombardier Inc.
CS130-21.02-06.00-121418

IPC Interface

The integrated processing cabinets (IPCs) communicate via the AFDX or avionics system local area network (LAN). The network route uses the digital switching modules contained in each IPC to connect data between source and destination subsystems. Systems communicating with the AFDX LAN A and LAN B buses include:

- Information management system (IMS)
- Control and distribution cabinets (CDCs)
- Health management unit (HMU)
- Data concentrator unit module cabinets (DMCs)
- Display units (DUs)

Copyright © Bombardier Inc.

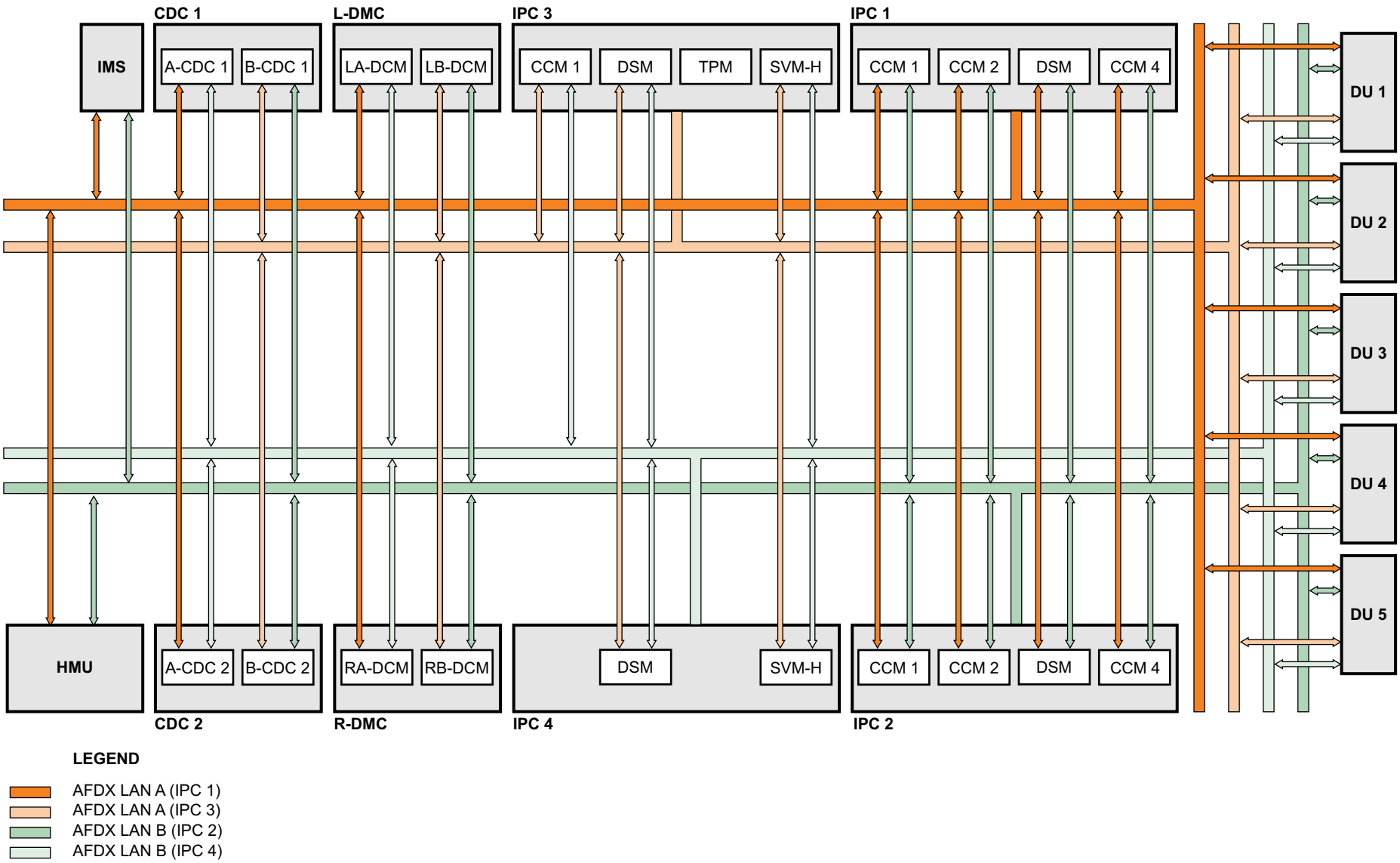

Figure 26: IPC Interface

DATA CONCENTRATION SYSTEM

The data concentration system (DCS) is comprised of two data concentrator unit module cabinets (DMCs), each housing two physically partitioned channels (A and B). Each channel contains:

- Power producing module
- Input/output modules
- Data concentrator module

Each module is constructed of one or more circuit cards, housed within a protective cover.

The cover and environmental module and power producing module provide the cooling and power required for the cabinet and its loaded applications.

The three input/output modules (IOMs) provide signal conditioning and conversion between aircraft sensors and the data concentrator module (DCM). One module carries out acquisition and reformatting of flight and system data for the flight data recorder (FDR).

The DCM contains software for a number of functions, including data acquisition and distribution, system indications, EICAS, flight guidance, and autothrottle operation.

Copyright © Bombardier Inc.

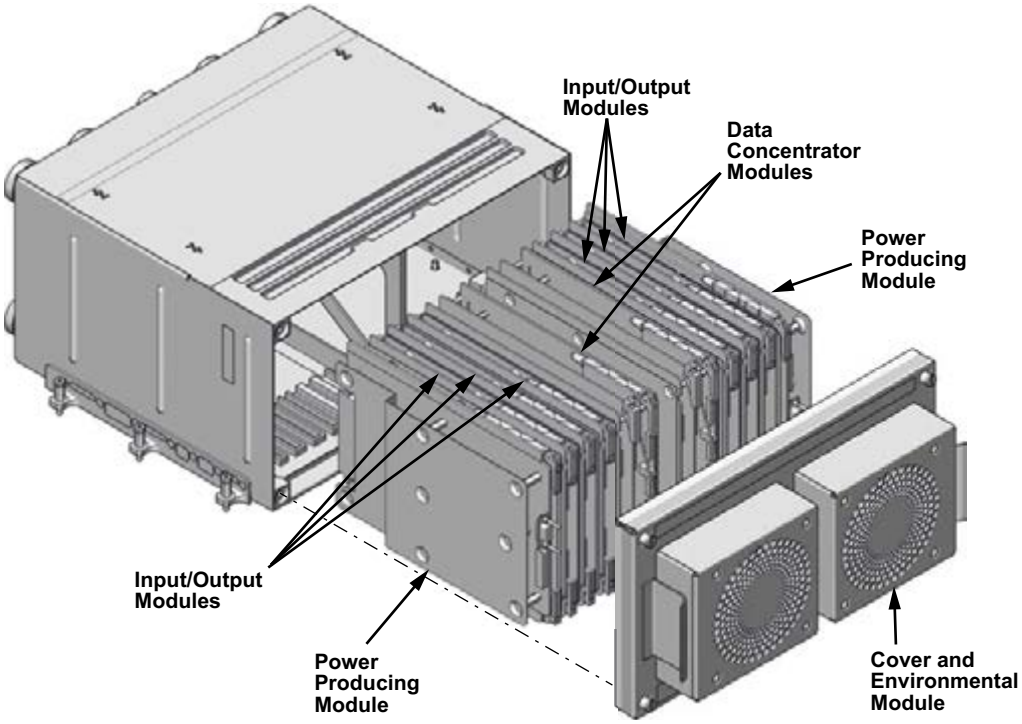

DATA CONCENTRATOR UNIT MODULE CABINET

CS1_CS3_3141_016

Figure 27: Data Concentrator Unit Module Cabinets

Copyright © Bombardier Inc.

Cover and Environmental Module

The cover and environmental module (CEM) contains dual-axial fan assemblies attached to the front cover. Each fan draws in air from above and below the cabinet and forces it out through the front face of the module. Power is provided to the fan from the power producing module (PPM).

Power Producing Module

The PPM installed in each data concentrator unit module cabinet (DMC) channel, provides regulated power to each channel, and controls the operation of the channel fan installed on the cover and environmental module (CEM).

The PPM includes monitoring circuitry for fan operation and cabinet temperature control. The fan is normally in continuous operation when cabinet temperature exceeds 24°C. If a DMC reaches a temperature of 90° C, the power supply shuts off. The DMC comes online automatically once the temperature drops below 80° C.

An AVIONIC FAN FAULT advisory message is displayed should the DMC channel fan fault be detected or the speed drops below 75% of its rated speed.

Copyright © Bombardier Inc.

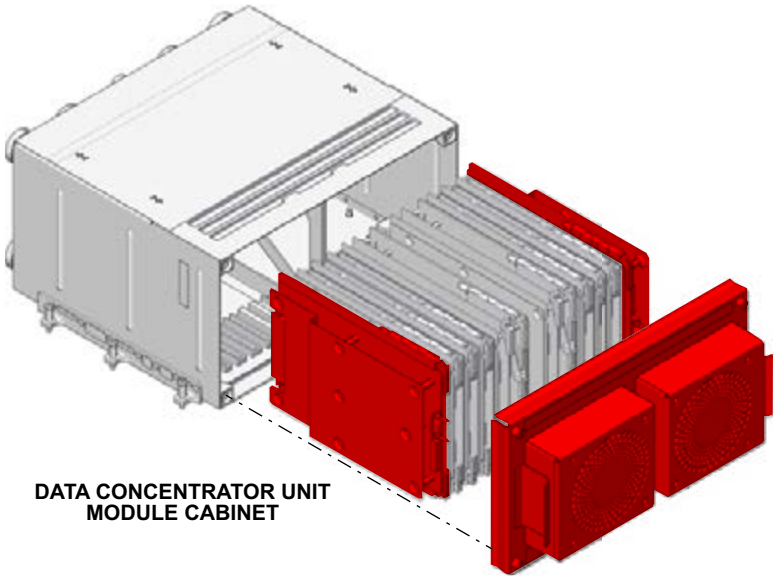

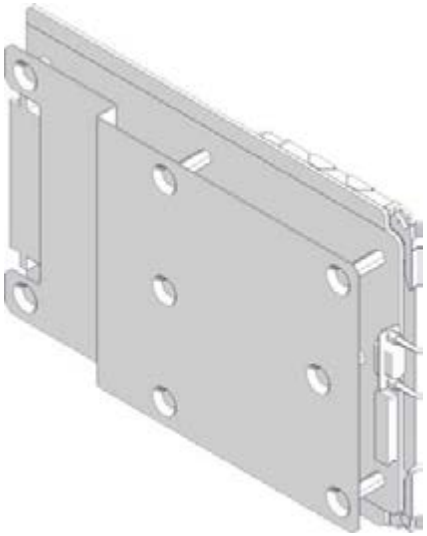

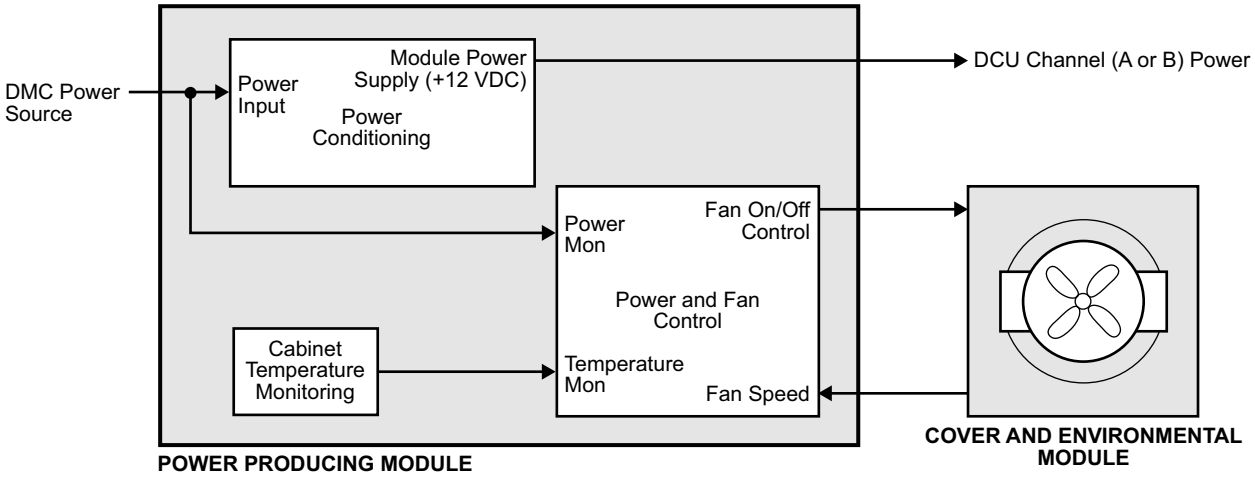

CS1_CS3_3140_022

Figure 28: Cover and Environmental and Power Producing Modules

Input/Output Modules

Each DMC channel includes three input/output modules (IOMs). Two modules receive analog and discrete signals from aircraft sensors, carry out analog to digital conversions, and route the information to the data concentrator modules (DCMs).

The third IOM module receives input from miscellaneous systems and components such as thermocouples and rotary variable differential transformers (RVDTs). This module is also responsible for the acquisition of system data required by the flight data recorder (FDR). Data is provided to the FDR in ARINC 717 format.

Copyright © Bombardier Inc.

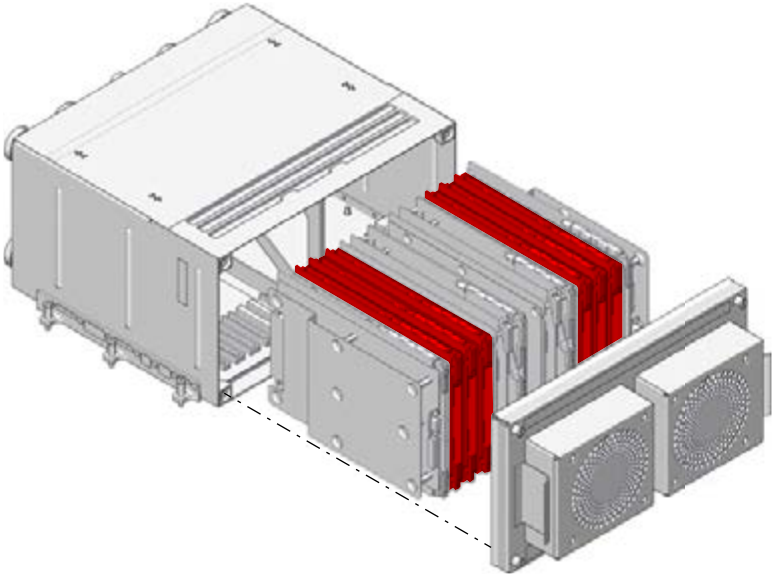

DATA CONCENTRATOR UNIT
MODULE CABINET

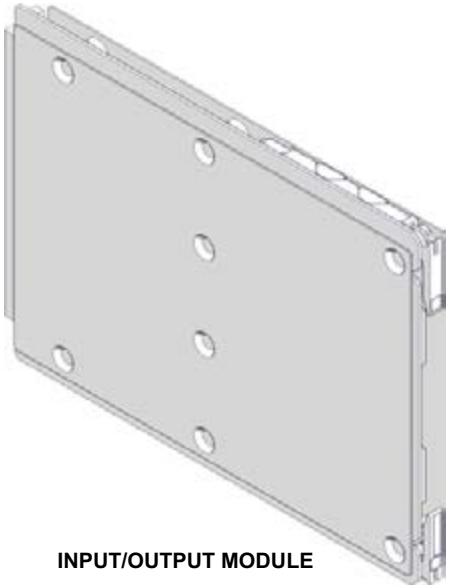

INPUT/OUTPUT MODULE

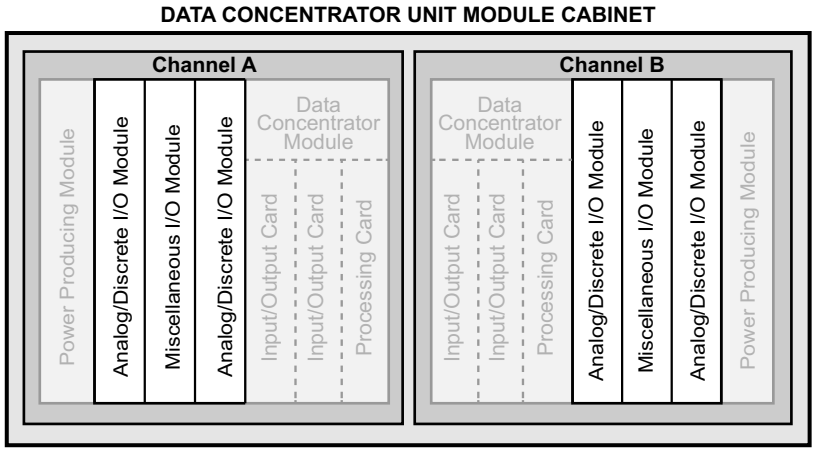

CS1_CS3_3140_021

Figure 29: Input/Output Modules

Data Concentrator Module

Each data concentrator module (DCM) installed in the data concentrator unit module cabinet (DMC) is constructed as a single line replaceable module (LRM), containing a processor card and two input/output mezzanine cards. Each card is separated by fixed mounting posts.

The function of the DCM is to provide:

- Centralized concentration of discrete, analog, and serial data from aircraft systems
- A processing platform for specific-purpose applications including engine indication and crew alerting (EICAS), flight guidance, and autothrottle
- Routing of data between the DMC and user systems by ARINC 429 and ARINC 664 data protocols
- Processing of configuration and options data as contained in the aircraft personality module (APM)

Copyright © Bombardier Inc.

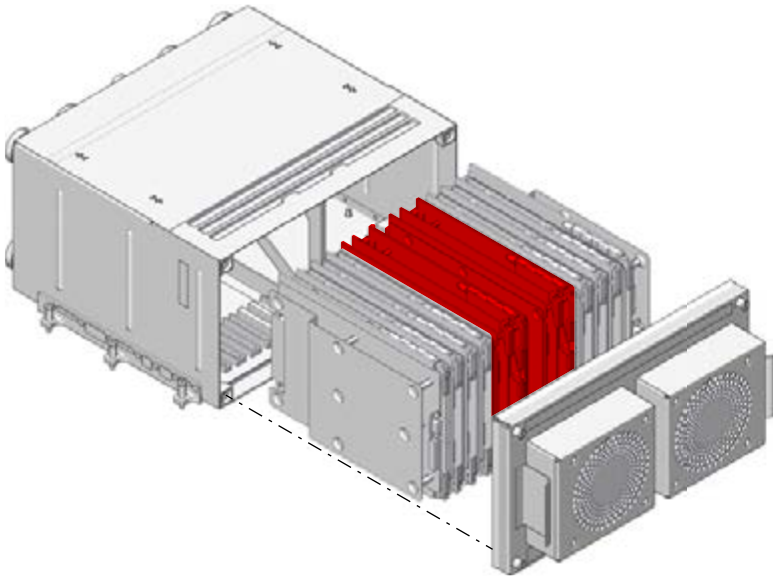

DATA CONCENTRATOR UNIT MODULE CABINET

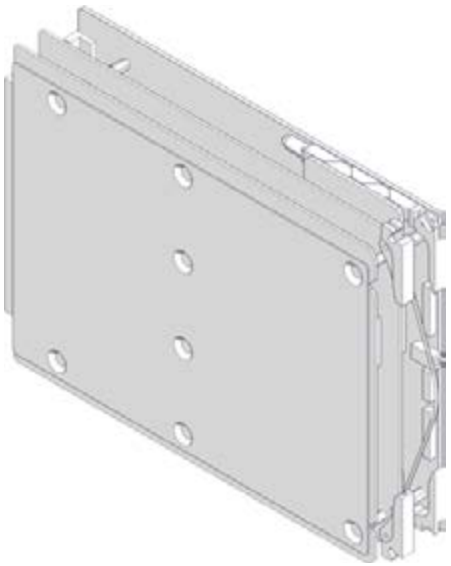

DATA CONCENTRATOR MODULE

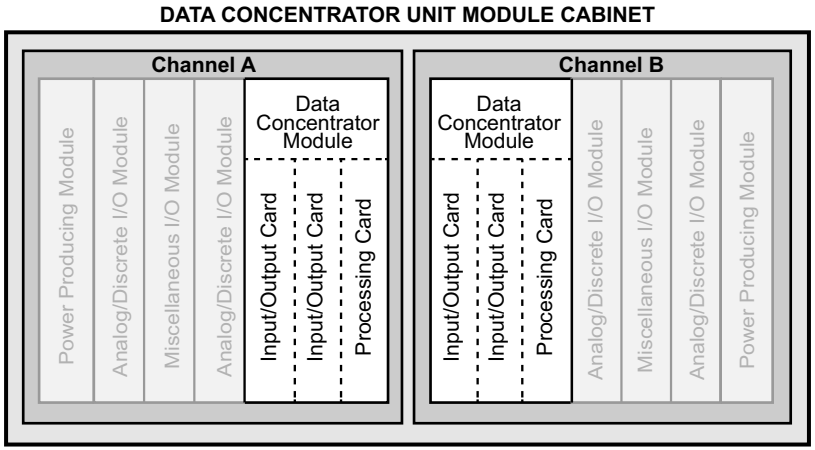

CS1_CS3_3140_020

Figure 30: Data Concentrator Module

AIRCRAFT PERSONALITY MODULE

Each aircraft personality module (APM) provides memory storage of configuration data, option information, and customer preference settings.

The APM uses a serial interface to communicate with the data concentrator module (DCM) input/output mezzanine cards, located in channel A of the DMC. The APM receives clock information in addition to electrical power from the DCM.

The APM data is routed to the integrated processing cabinets (IPCs), via the digital switching module (DSM), to the common computing module (CCM). The IPC 1 slot no. 3 CCM has the configuration manager (CM) application which compares the APM configuration table data it receives against the information received from the health monitors on each of the installed modules, applications, and functions.

There are no CAS messages relating to any configuration disagreement. This information is stored in the onboard maintenance system (OMS) and noted to maintenance personnel as an INFO message.

Copyright © Bombardier Inc.

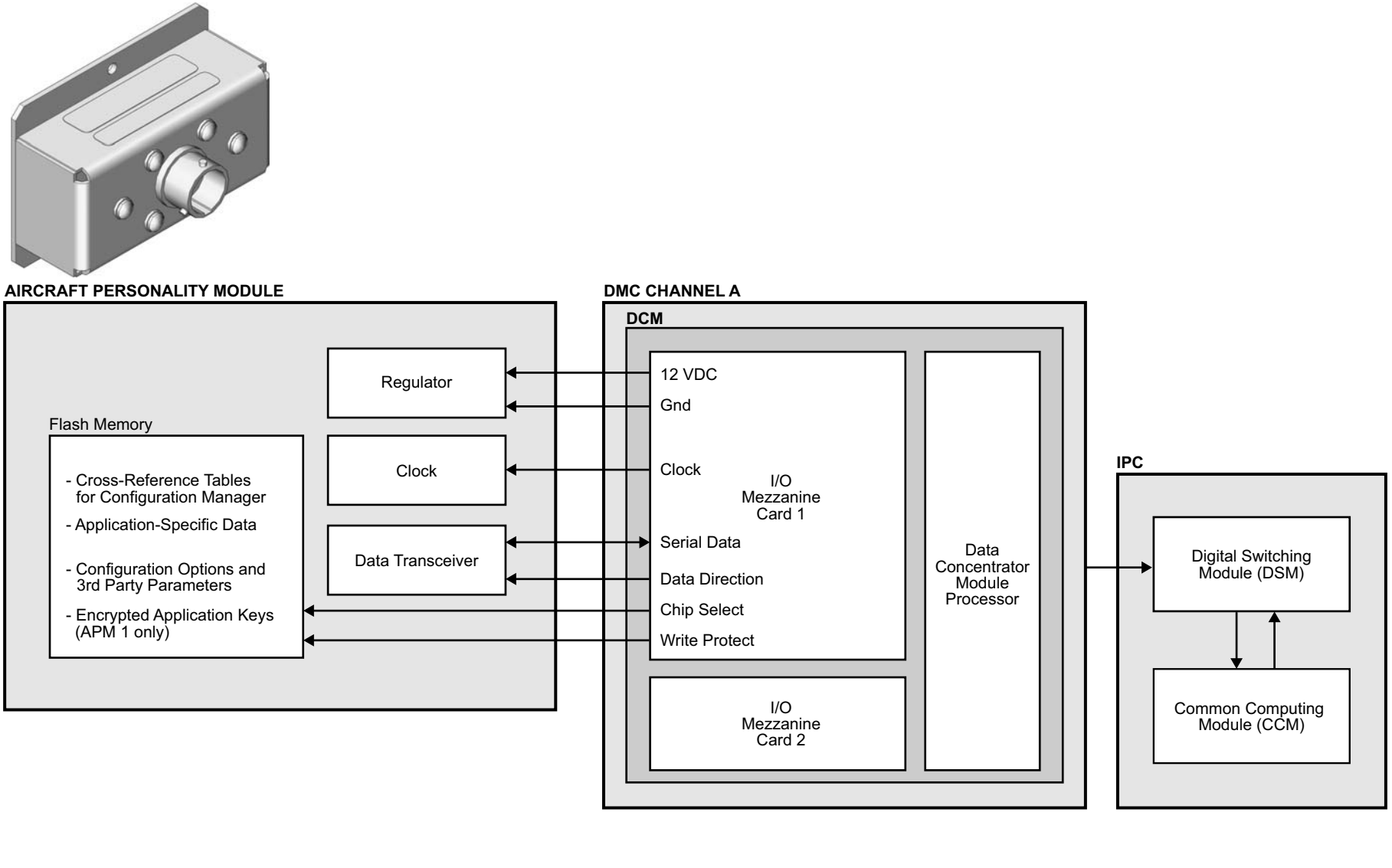

Figure 31: Aircraft Personality Module

DATA CONCENTRATOR UNIT MODULE CABINETS INTERFACE

The data concentrator unit module cabinets (DMCs) perform input/output and data concentration of ARINC 429, discrete, and analog data from airframe and avionics systems. The DMCs communicate with the integrated processing cabinets (IPCs) via ARINC 664 AFDX protocol.

The ARINC 429 inputs are provided to the input processing card installed on each data concentrator module (DCM).

ARINC 429 cross-talk buses exchange computed CAS messages, discrete and analog inputs, as well as other data processed by one DMC and passed on to the other.

Copyright © Bombardier Inc.

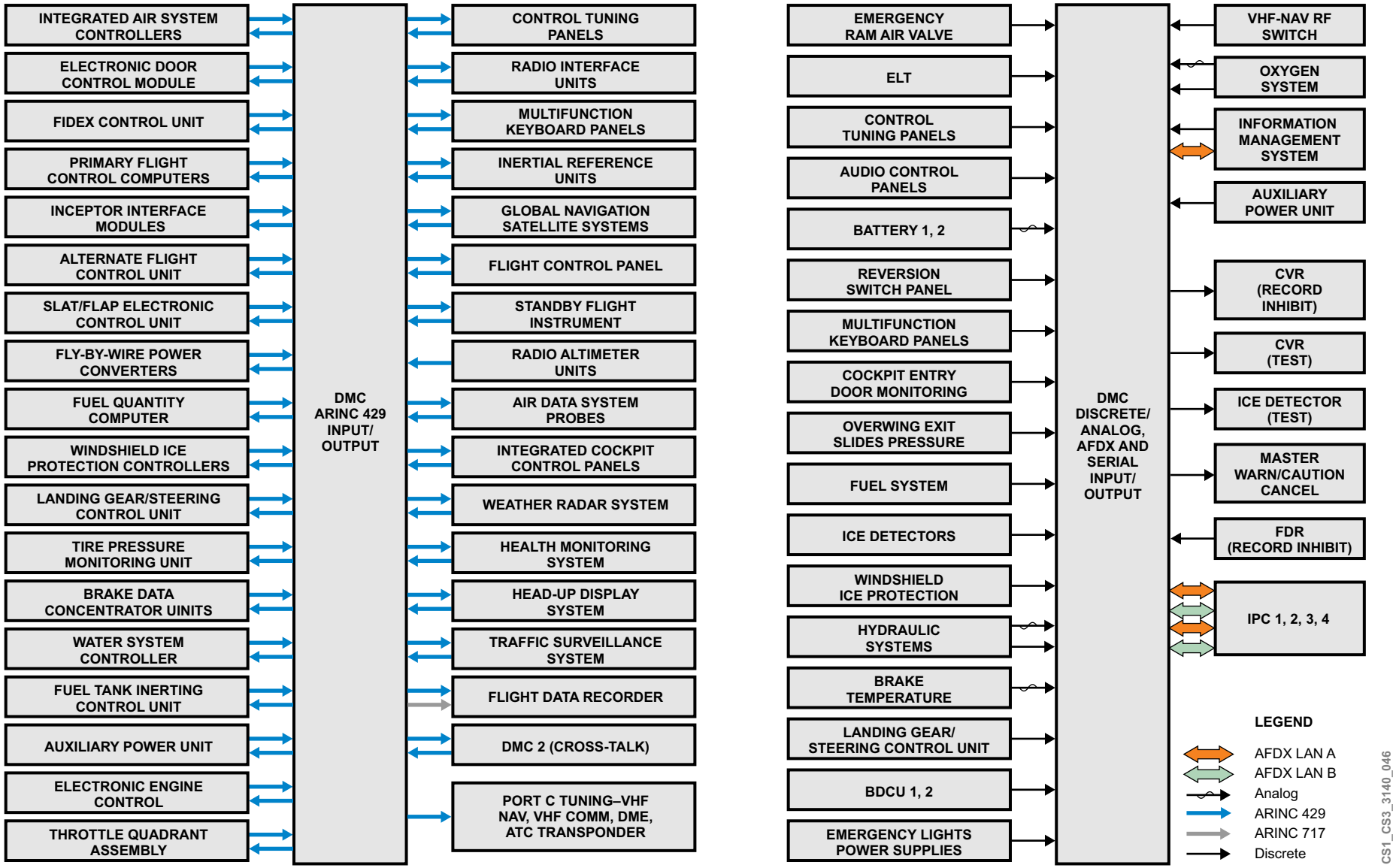

Figure 32: DMC Input/Output

MONITORING AND TESTS

The following page provides the crew alerting system (CAS) and INFO messages for the integrated avionics processing system.

CAS MESSAGES

Table 3: CAUTION Messages

MESSAGE	LOGIC
DMC 1 FAIL	Both DMC channels failed.
DMC 2 FAIL	Both DMC channels failed.
IPC 1 FAIL	IPC 1 failed.
IPC 2 FAIL	IPC 2 failed.
IPC 3 FAIL	IPC 3 failed.
IPC 4 FAIL	IPC 4 failed.

Table 4: Advisory Messages

MESSAGE	LOGIC
AVIONIC FAULT	Loss of redundant or non-critical function for the avionics systems
AVIONIC FAN FAULT	Loss of fans functionality within avionics LRUs
DMC 1A FAIL	DMC channel 1A failed.
DMC 2A FAIL	DMC channel 2A failed.
DMC 1B FAIL	DMC channel 1B failed.
DMC 2B FAIL	DMC channel 2B failed.

Table 5: INFO Messages

MESSAGE	LOGIC
31 AVIONICS FAN FAULT - IPC FAN 1 INOP	Indicated IPC fan has failed.
31 AVIONICS FAN FAULT - IPC FAN 2 INOP	Indicated IPC fan has failed.
31 AVIONICS FAN FAULT - IPC FAN 3 INOP	Indicated IPC fan has failed.
31 AVIONICS FAN FAULT - IPC FAN 4 INOP	Indicated IPC fan has failed.
31 AVIONICS FAN FAULT - DMC 1A FAN INOP	Indicated DMC fan has failed. Onside channel reports fan fail or cross-side channel reports cross-side fan fail and the DCU channel has not failed.
31 AVIONICS FAN FAULT - DMC 1B FAN INOP	Indicated DMC fan has failed. Onside channel reports fan fail or cross-side channel reports cross-side fan fail and the DCU channel has not failed.
31 AVIONICS FAN FAULT - DMC 2A FAN INOP	Indicated DMC fan has failed. Onside channel reports fan fail or cross-side channel reports cross-side fan fail and the DCU channel has not failed.
31 AVIONICS FAN FAULT - DMC 2B FAN INOP	Indicated DMC fan has failed. Onside channel reports fan fail or cross-side channel reports cross-side fan fail and the DCU channel has not failed.
34 AVIONIC FAULT - IPC 1 DSM INOP	Loss of DSM 1 data has occurred, but IPC 1 has not failed.
34 AVIONIC FAULT - IPC 2 DSM INOP	Loss of DSM 2 data has occurred, but IPC 2 has not failed.
34 AVIONIC FAULT - IPC 3 DSM INOP	Loss of DSM 3 data has occurred, but IPC 3 has not failed.

Copyright © Bombardier Inc.

Page Intentionally Left Blank

Table 5: INFO Messages

MESSAGE	LOGIC
34 AVIONIC FAULT - IPC 4 DSM INOP	Loss of DSM 4 data has occurred, but IPC 4 has not failed.
34 AVIONIC FAULT - DSPL XTALK COM LOSS	One or more AFDs is reporting it has lost communication with one or more AFDs.
34 AVIONIC FAN FAULT - L OUTBD DSPL L FAN INOP	Noted DU is reporting its left cooling fan has failed.
34 AVIONIC FAN FAULT - L OUTBD DSPL R FAN INOP	Noted DU is reporting its right cooling fan has failed.
34 AVIONIC FAN FAULT - L INBD DSPL L FAN INOP	Noted DU is reporting its left cooling fan has failed.
34 AVIONIC FAN FAULT - L INBD DSPL R FAN INOP	Noted DU is reporting its right cooling fan has failed.
34 AVIONIC FAN FAULT - R INBD DSPL L FAN INOP	Noted DU is reporting its left cooling fan has failed.
34 AVIONIC FAN FAULT - R INBD DSPL R FAN INOP	Noted DU is reporting its right cooling fan has failed.
34 AVIONIC FAN FAULT - R OUTBD DSPL L FAN INOP	Noted DU is reporting its left cooling fan has failed.
34 AVIONIC FAN FAULT - R OUTBD DSPL R FAN INOP	Noted DU is reporting its right cooling fan has failed.
34 AVIONIC FAN FAULT - LWR DSPL L FAN INOP	Noted DU is reporting its left cooling fan has failed.
34 AVIONIC FAN FAULT - LWR DSPL R FAN INOP	Noted DU is reporting its right cooling fan has failed.

Copyright © Bombardier Inc.

PRACTICAL ASPECTS

DISPLAY UNIT REMOVAL/INSTALLATION

The DU is secured in place with handle locks located at the front of the unit. The locks are released outward by pushing a button located between the handle locks.

Once released, the handles can be pulled about a pivot, causing the unit to disengage from the rear electrical connectors and slightly move from its mount. A carrying handle is installed at the top of the unit.

Copyright © Bombardier Inc.

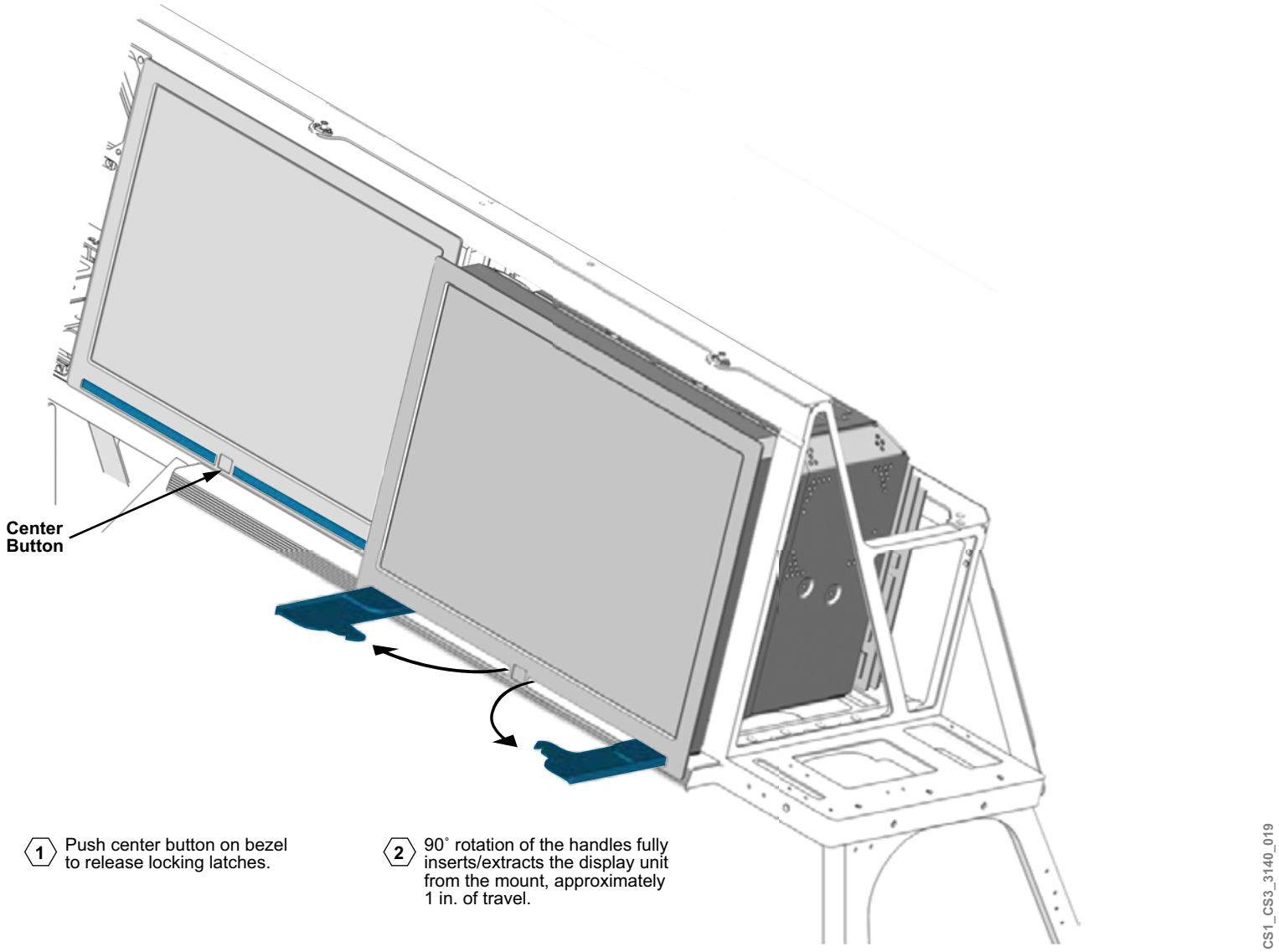

Figure 33: Display Unit Installation

IPC AND DMC MODULE REMOVAL/INSTALLATION

Each integrated processing and data concentrator unit module cabinet provides the housing, backplane structure, and wiring to support the installation of line replaceable modules (LRMs).

The backplane structure separates modules and interfaces with the connectors at the rear of the cabinet.

Upper and lower cabinet rails guide the individual modules during installation. Upper and lower locking levers secure the individual module. The levers are hinged vertically and are positioned in line with the module when locked. Lifting the levers releases the module from the rear connectors allowing it to be extracted.

Some modules are provided with a short lanyard, which may be used to pull the module from its mounting position.

Hold the levers in the open position during insertion into the IPC. All line replaceable modules installed in the IPC and DMC must be fully inserted into the card cage before the wedge clamps are moved into the locked position. Failure to do so may result in improper engagement.

Printed decals on the levers provide information on individual module type, part number, and serial and modification numbers.

NOTE

All of the CCM cards are interchangeable for troubleshooting purposes, provided the software is reloaded. If the IPC slot no. 3 CCM is swapped or removed for troubleshooting purposes, the OMS, configuration manager, and application license manager applications are lost.

The software for this CCM must be manually reinstalled and any systems requiring an access key must have them re-entered.

Copyright © Bombardier Inc.

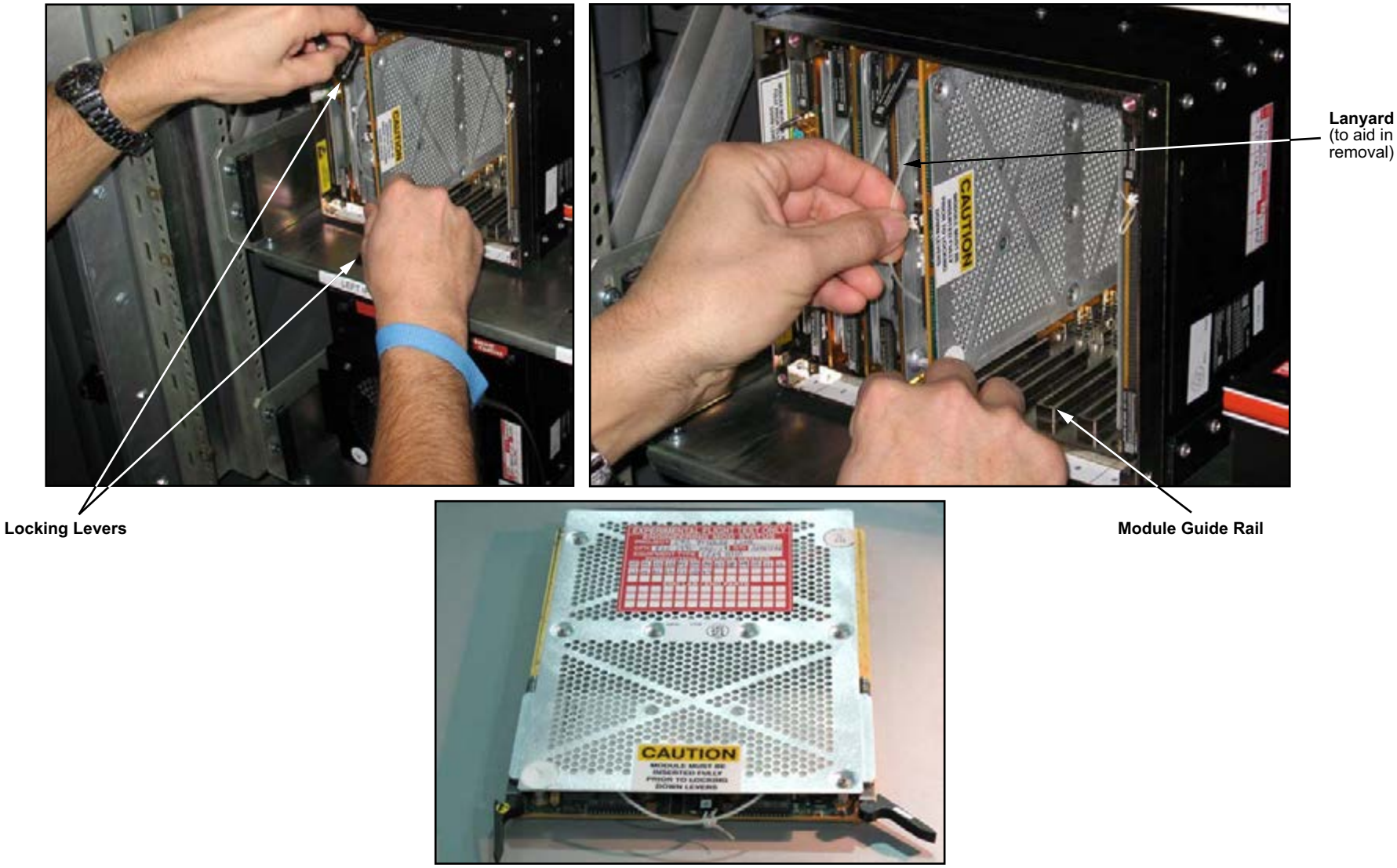

LINE REPLACEABLE MODULE

CS1_CS3_3140_032

Figure 34: Module Removal/Installation

IPC AND DMC MODULE LAMPS

Red and green light-emitting diode (LED) lamps, located on each module, indicate its operational status. Both green and red lamps are illuminated during initial power up and internal testing. The red LED goes off once testing is complete, while the green LED remains on continuously during system operation.

If the red LED stays on once the test is complete, a software reload is required. If the red LED is blinking, the CCM needs to be reseated or replaced.

The CCMs installed in the integrated processing cabinets are each equipped with a small shunt connector, which serves as an on/off device for the associated module.

NOTE

Neither system should be operated for extended periods of time with the cabinet cover removed, as cooling airflow may be inadequate.

Copyright © Bombardier Inc.

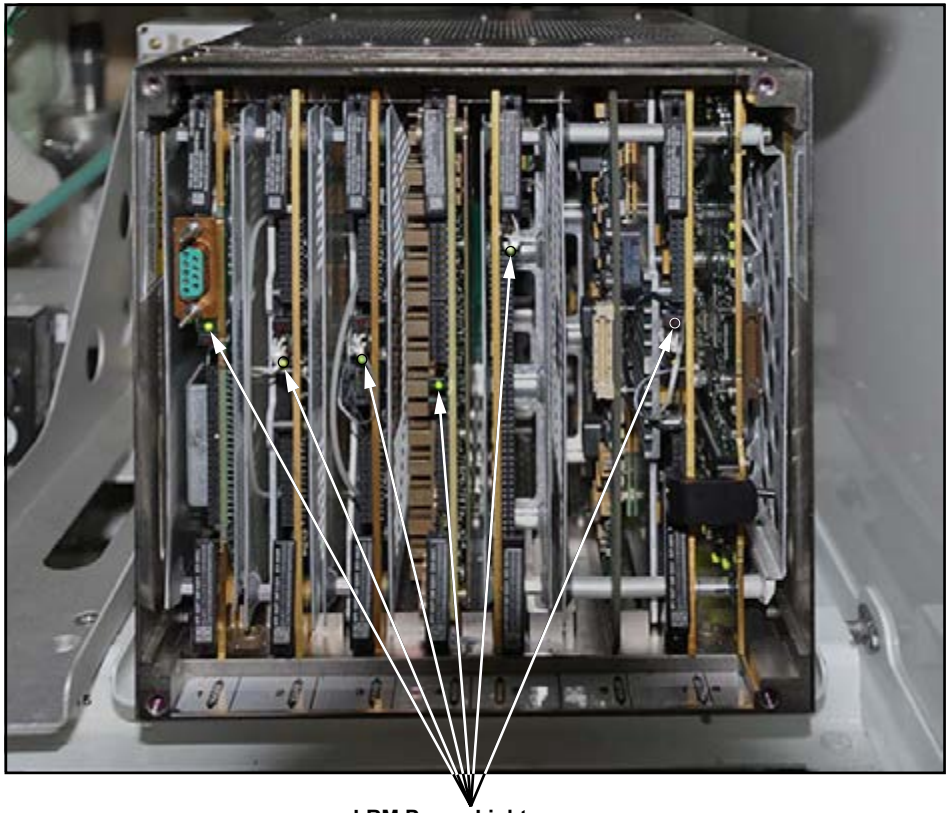

LED STATUS	CONDITION
SOLID RED	Reload software.
FLASHING RED	Reset or replace card.
GREEN	Normal operation.

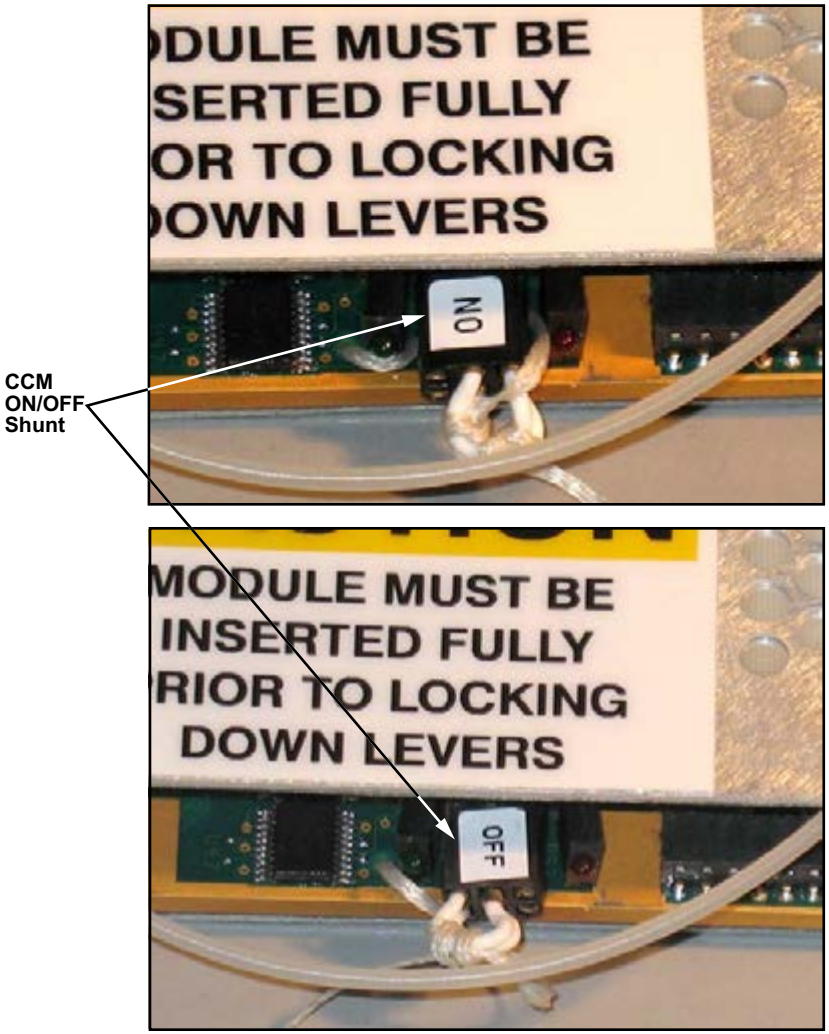

REVERSE CONNECTION FOR CCM ON/OFF OPERATION

CS1_CS3_3140_033

Figure 35: Module Power Lamps and On/Off Shunt

FIELD LOADABLE SOFTWARE

The integrated modular avionics (IMA) is provided with field loadable software, including functional applications, configuration tables, and databases. The complete avionics software suite can be loaded using a single USB memory stick.

The following IMA components are equipped to receive field loadable files using the information management system (IMS):

- Display units
- Integrated processor cabinets
- Data concentrator unit module cabinets

Field loadable software is organized into media sets containing one or more load sets. The media set contained in a software package is provided a part number which may be viewed using the information management system (IMS).The load sets are software components associated with line replaceable modules (LRMs) installed in the cabinets.

The major IMA components are loaded with runtime software by the unit manufacturer. The runtime software consists of the operating system, drivers, applications, and configuration tables, and is required to carry out field loading:

- Common computing module runtime (CCMR) - loaded in the integrated processor cabinets
- Data concentration module runtime (DCMR) - loaded in the data concentrator module cabinets

Display Unit

Each DU is loaded with the adaptive flight display application (AFDA) and adaptive flight display application table (AFDT) media sets.

The adaptive flight display application (AFDA) media set includes the runtime software for the displays. This includes the processing table applications coordinating cursor control, graphical tuning, and control functions.

The adaptive flight display table (AFDT) media set includes application configuration files and tables supporting the layout and graphics used on the DU, including maps, maintenance diagnostics, EICAS, tuning, and other systems and functions.

Copyright © Bombardier Inc.

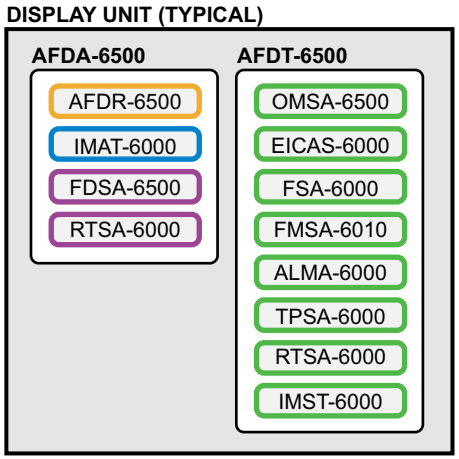

AFDA	ADAPTIVE FLIGHT DISPLAY APPLICATION	MEDIA SET
AFDR	Adaptive Flight Display Runtime	Factory Loaded Runtime Software
IMAT	Integrated Modular Avionics Table	Configuration Tables for Processing and Network
FDSA	Flight Display System Application	Format and Graphic Control for Display Units
RTSA	Radio Tuning System Application	Tuning Interface Control for Radio Management

AFDT	ADAPTIVE FLIGHT DISPLAY APPLICATION TABLES	MEDIA SET
OMSA	Onboard Maintenance System Application	Graphic/GUI Interface Tables for OMS
EICAS	Engine Indication/Crew Alerting System Application	Graphic Tables for EICAS Pages
FSA	File Server Application	Graphic Tables for IFIS
FMSA	Flight Management System Application	Graphic/GUI Tables for FMS
ALMA	Application License Manager Application	GUI Interface Tables for Application Keys
TPSA	Terrain Processing Application	Graphic/GUI Tables for TAWS
RTSA	Radio Tuning System Application	Graphic/GUI Tables for RTSA
IMST	Information Management System Table	Graphic/GUI Tables for IMS

LEGEND

- Application GUI/Widget Tables
- Functional Application
- Runtime
- Systems Configuration Table
- Top-Level Software Media Set

CS1_CS3_3140_041

Figure 36: Display Unit Loadset/Application

Copyright © Bombardier Inc.

Integrated Processing Cabinet

Runtime software is pre-loaded by the avionics manufacturer for each of the common computing modules (CCMs) as well as the digital switching modules (DSMs).

Field-loadable software components include the following:

- Application configuration tables
- Functional application software
- System configuration tables

Several required databases are loaded independently from the system software, and include application databases, periodic databases, and electronic publication databases.

Copyright © Bombardier Inc.

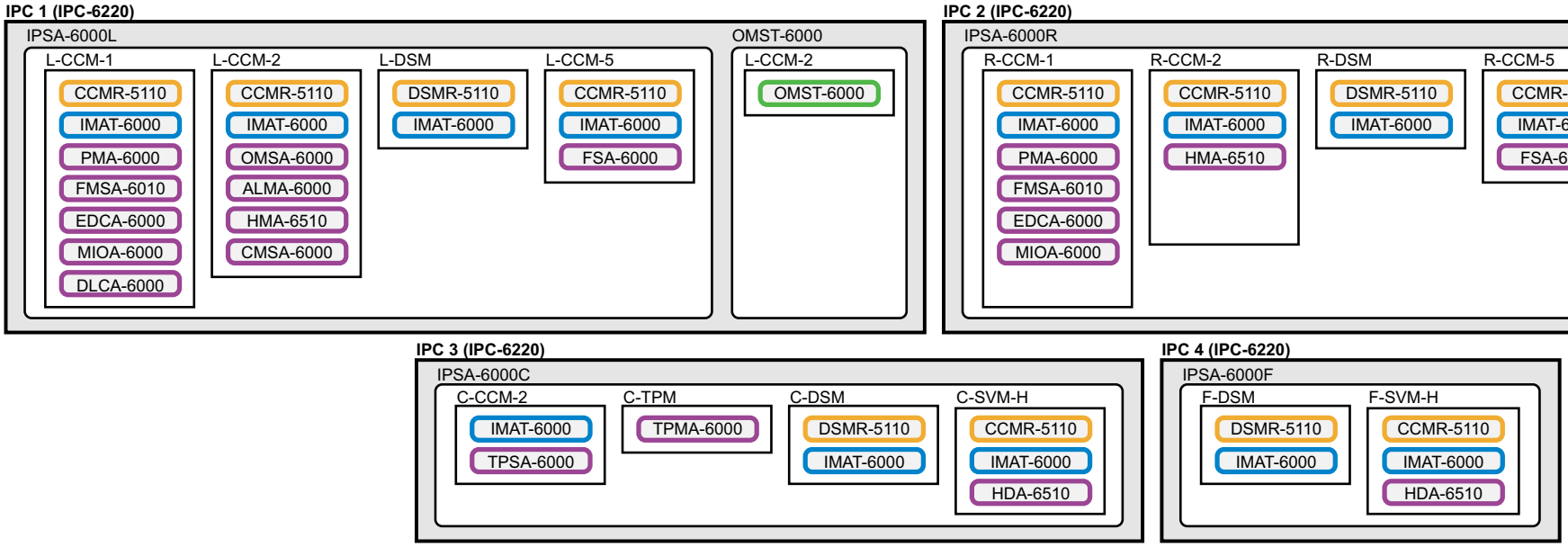

IPSA	INTEGRATED PROCESSING SYSTEM APPLICATION	MEDIA SET
ALMA	Application License Manager Application	Processes Application Keys to Enable or Disable Functions
CCMR	Common Computing Module Runtime	Factory Loaded Runtime Software
CMSA	Configuration Manager System Application	Monitors that Correct Software is Installed as per APM
DLCA	Data Link Communication Application	For CPDLC, FANS, and ATN Data Link Communications
DSMR	Digital Switch Module Runtime	Runtime File for Digital Switching Module
ECDA	Emulated Control Display Unit Application	Processes Input/output for Interactive Display Formats
FMSA	Flight Management System Application	For Flight Management System (FMS) Operation
FSA	File Server Application	For Operation of the Integrated Flight Information System
HDA	HUD Display Application	For Operation of the Head-Up Display System
HMA	HUD Monitor Application	For Operation of the Head-Up Display System
IMAT	Integrated Modular Avionics Table	Configuration Tables For IMA System Processing, Network Resources
MIOA	Multifunction Keyboard I/O Application	Interfacing Application For MKP, Ethernet Network, Avionics Suite
OMSA	Onboard Maintenance System Application	For Operation of the Onboard Maintenance System
PMA	Protocol Manager Application	Utility to Facilitate Ethernet Network Communications
TPMA	TAWS Processing Module Application	For Operation of the Terrain Awareness and Warning System

OMST	ONBOARD MAINTENANCE SYSTEM TABLE	MEDIA SET
OMST	Onboard Maintenance System Table	Collection of Tables for OMS Functions

LEGEND

- Application Configuration Table
- Functional Application
- Runtime
- Systems Configuration Table
- Top-Level Software Media Set

CS1_CS3_3140_042

Figure 37: IPC Loadset

Data Concentrator Unit Module Cabinet

Runtime software is pre-loaded by the avionics manufacturer for each of the data concentrator modules (DCMs).

Software applications installed in the DCM include those responsible for engine indicating and crew alerting system, and the flight control system application.

Several tables support operation of DMC input/output concentration, EICAS messages and checklists, and operation of the flight guidance and autothrottle systems.

Copyright © Bombardier Inc.

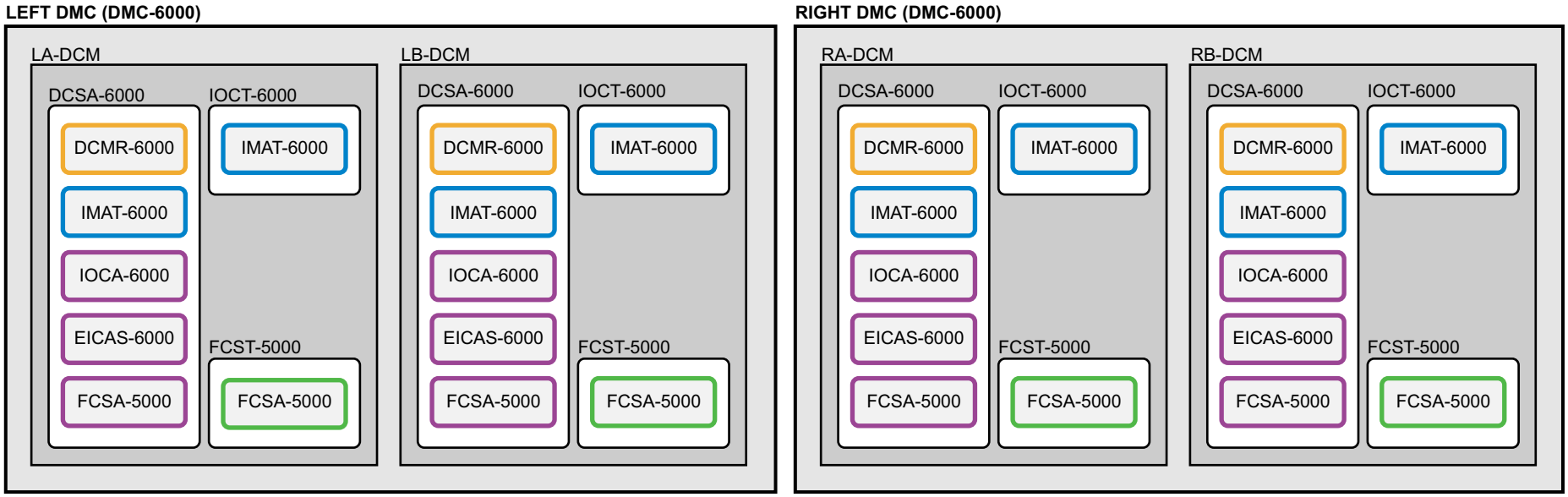

DCSA	DATA CONCENTRATOR SYSTEM APPLICATION	MEDIA SET
DCMR	Data Concentrator Module Runtime	Diagnostics, Condition Monitoring, Configuration, and Reporting
IMAT	Integrated Modular Avionics Table	Configuration Tables for IMA System Processing and Network Resources
IOCA	Input/Output Concentrator Application	Utility to Facilitate Ethernet Network Communications
EICAS	Engine Indication and Crew Alerting System	For System and Synoptic Display and Crew Alerting Operation
FCSA	Flight Control System Application	For Flight Guidance, Autothrottle, and Autopilot Routing Functions

IOCT	IOC MAPPING TABLE	MEDIA SET
IMAT	Integrated Modular Avionics Table	Configuration Tables for Sharing of IMA System Processing and Network Resources

FCST	FLIGHT CONTROL SYSTEM TABLE	MEDIA SET
FCSA	Flight Control System Application	For Flight Guidance, Autothrottle, and Autopilot Routing Functions

LEGEND

- Application Configuration Table
- Functional Application
- Runtime
- Systems Configuration Table
- Top-Level Software Media Set

CS1_CS3_3140_043

Figure 38: DMC Loadset

31-60 ELECTRONIC FLIGHT INSTRUMENT SYSTEM

GENERAL DESCRIPTION

The electronic flight instrument system (EFIS) controls the display of flight, navigation, and situational awareness information, and allows the flight crew to manage the display of data on five adaptive display units (DUs).

The EFIS receives most avionics and airframe system input via the integrated processor cabinets (IPCs) and data concentrator unit module cabinets (DMCs) using the AFDX network.

Several systems provide critical data directly to the display units bypassing the IPCs and DMCs. This includes:

- Engine parameters from the electronic engine control (EEC)
- Attitude data from the inertial reference systems (IRSs)
- Flight data from the primary flight control computers (PFCCs)
- Air data from the air data smart probes (ADSPs)

A number of flight deck panels interface with the EFIS to control a variety of functions, including format, overlay, data entry, and mode selections. The panels are as follows:

- Multifunction keyboard panels (MKPs)
- Cursor control panels (CCPs)
- Reversion switch panel (RSP)
- Flight control panel (FCP)
- Control tuning panels (CTPs)
- Left and right glareshield panels
- Doors/Lighting panel

The normal display configuration presents primary flight data on the outboard display units, engine indication and crew alerting system (EICAS), and related data on one of the inboard displays, while the remaining displays are crew configurable to show navigation and system data as desired.

The flight control panel (FCP) also provides reference data for the automatic flight control system (AFCS). This data is also shown on the EFIS displays.

The left and right glareshield panels and doors/lighting panel include rotary knobs for controlling DU brightness and on/off state.

There are no dedicated circuit breakers or control switches to enable or disable the EFIS system. DC power sources for powering the individual display units are provided from DC BUS 1, DC BUS 2, DC ESS BUS 1, and DC ESS BUS 3.

Copyright © Bombardier Inc.

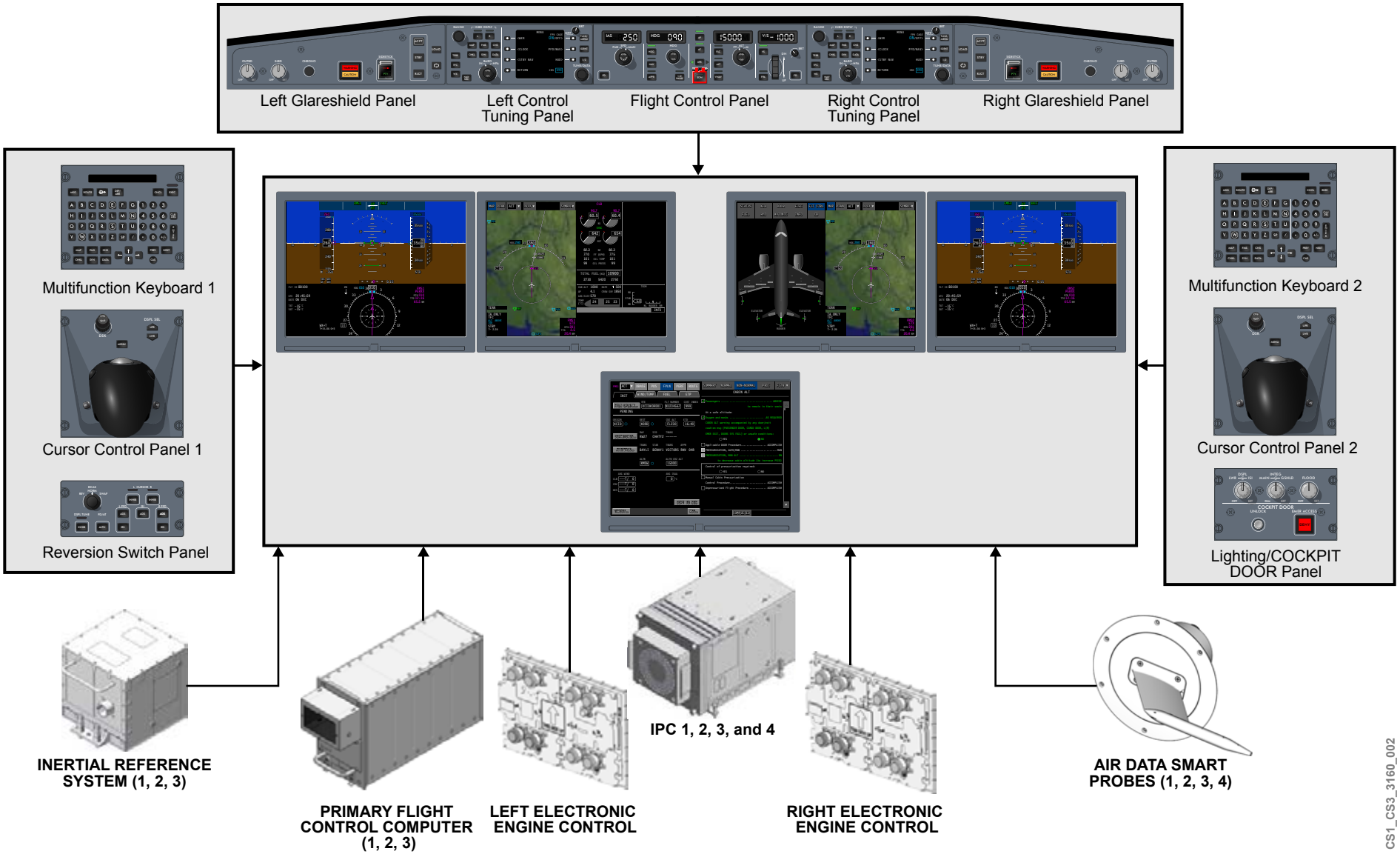

Figure 39: EFIS Layout

CONTROLS AND INDICATIONS

When power is turned on or cycled on the ground, the display units are initialized to the following default arrangement:

- DU 1 and DU 4 show the primary flight display (PFD)
- DU 2 shows a map display, and the engine indication and crew alerting system (EICAS) display
- DU 3 shows an EICAS synoptic page and a map display
- DU 5 shows an FMS format and a checklist

Should power be interrupted in flight, the DUs are reconfigured to the last selected formats.

The outboard DUs at each pilot station provide primary flight data, which occupies the full display. The data presented may not be moved or replaced with other data display during normal operations.

The EICAS format is presented on inboard window of DU 2.

The remaining display windows are considered multifunction windows (MFWs), capable of displaying different types of data. A thin vertical line visually separates windows located on the same DU. At any time, the crew may change any MFW to display another format as required.

When operating on battery or essential power, DU 1 and DU 2 only are operational. The default configuration for DU 1 and DU 2 is the same as when the aircraft is fully powered.

Copyright © Bombardier Inc.

NOTE

Initial power up on ground shown.
If power is interrupted in flight, the DUs remain configured in the last selected format.

CS1_CS3_3161_012

Figure 40: Display Units Default Arrangement

CONTROL PANELS

The following control panels allow the crew to directly manage the EFIS formats and display navigation:

- Multifunction keyboard panel (MKP)
- Reversion switch panel (RSP)
- Control tuning panel (CTP)
- Cursor control panel (CCP)

Copyright © Bombardier Inc.

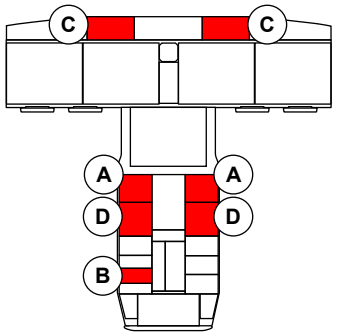

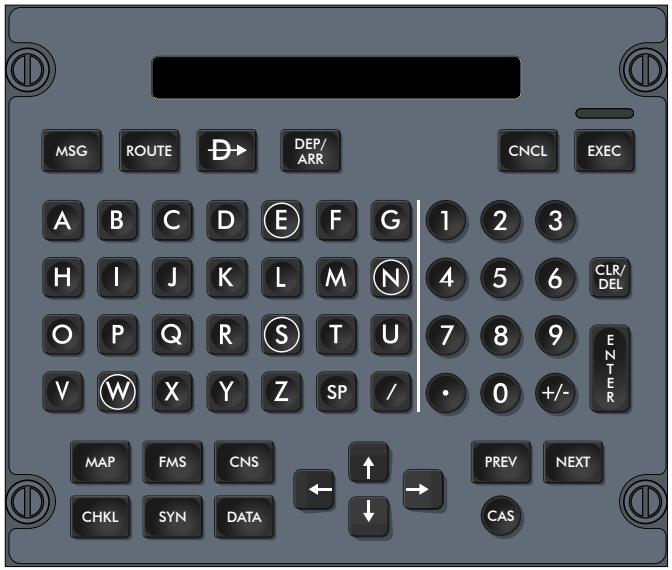

A MULTIFUNCTION KEYBOARD PANEL

B REVERSION SWITCH PANEL

C CONTROL TUNING PANEL

D CURSOR CONTROL PANEL

CS1_CS3_3161_002

Figure 41: EFIS Controls

Cursor Control Panel

The cursor control panel (CCP) allows the crew to interact with lists, menus, and selectable graphics presented on the display system. A fixed handrest and trackball assembly resembling a computer mouse is the primary feature of the CCP. The CCP includes:

- Select buttons
- Trackball
- Double-stack knob (DSK)
- Menu button
- Display select (DSPL SEL) buttons
- Push-to-talk (PTT) buttons

The handrest and trackball assembly is used to maneuver the onside cursor while select buttons allow the crew to select from listed or highlighted items on the DU.

Selection of the menu button shows a drop-down menu on the display unit (DU) window. Listed items are cursor selectable.

The display select buttons are used to position the cursor to the onside DU (DU 2 or DU 3) or lower DU (DU 5).

The double-stack knob has multiple functions, depending on what information is being displayed, including range control, frequency selection, or cursor tab control.

The push-to-talk (PTT) switches are used to key the active communication radio.

Copyright © Bombardier Inc.

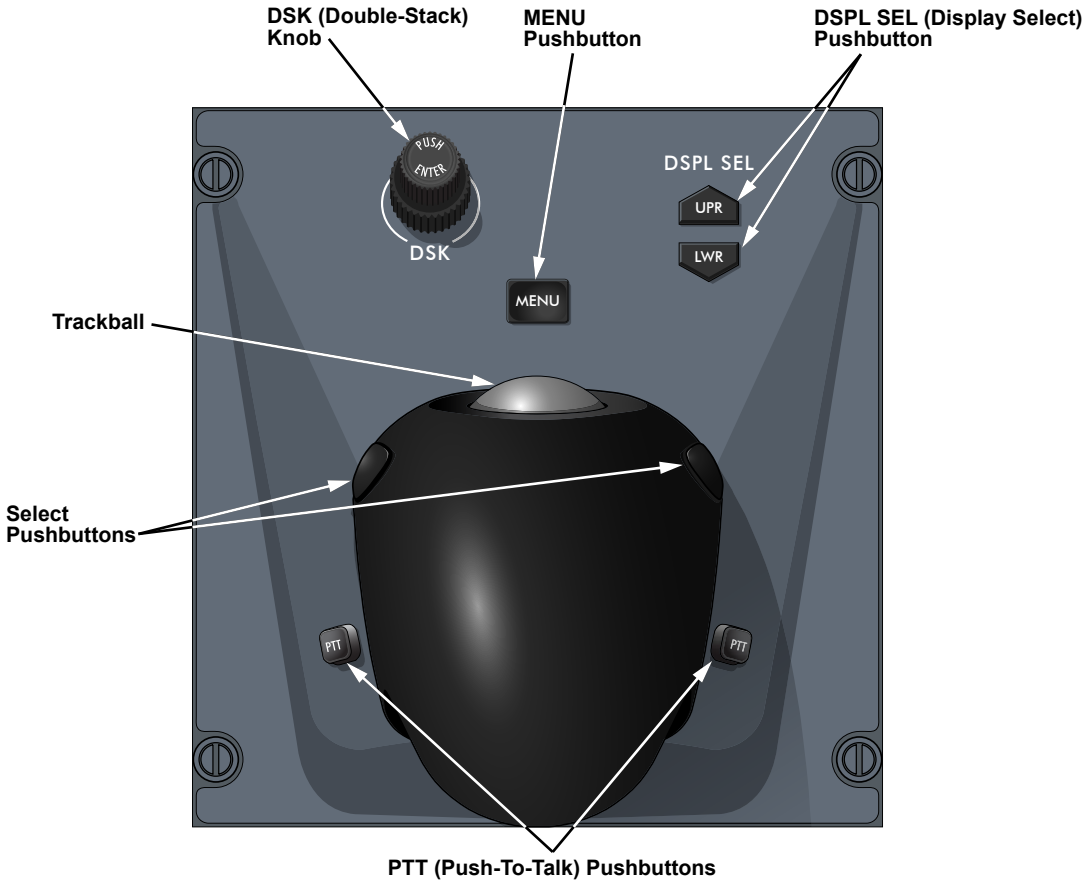

CS1_CS3_3161_022

Figure 42: Cursor Control Panel

Multifunction Keyboard Panel

The multifunction keyboard panel (MKP) interacts with a number of avionic systems and functions.

The scratchpad and alphanumeric keyboard, as well as the scratchpad data enter (ENTER) and clear/delete (CLR/DEL) keys are primarily used for entering or editing data in the flight management system (FMS). They may also be used to interface with the radio tuning system application (RTSA) and other onscreen menus.

The cancel (CNCL) and execute (EXEC) keys are used to enter and edit flight planning data in the FMS. The FMS control keys are used for quick access or function keys associated with operation of the FMS.

The quick-access keys are used to select the displayed format for a multifunction window (MFW) on DU 5 only.

The alternate cursor control keys are used as an alternate means to control the onside display cursor.

The previous (PREV) and next (NEXT) keys are used for page control, when multiple pages are available (for example the FMS).

The crew alerting system (CAS) key is used to control the display of CAS messages on the EICAS page.

Copyright © Bombardier Inc.

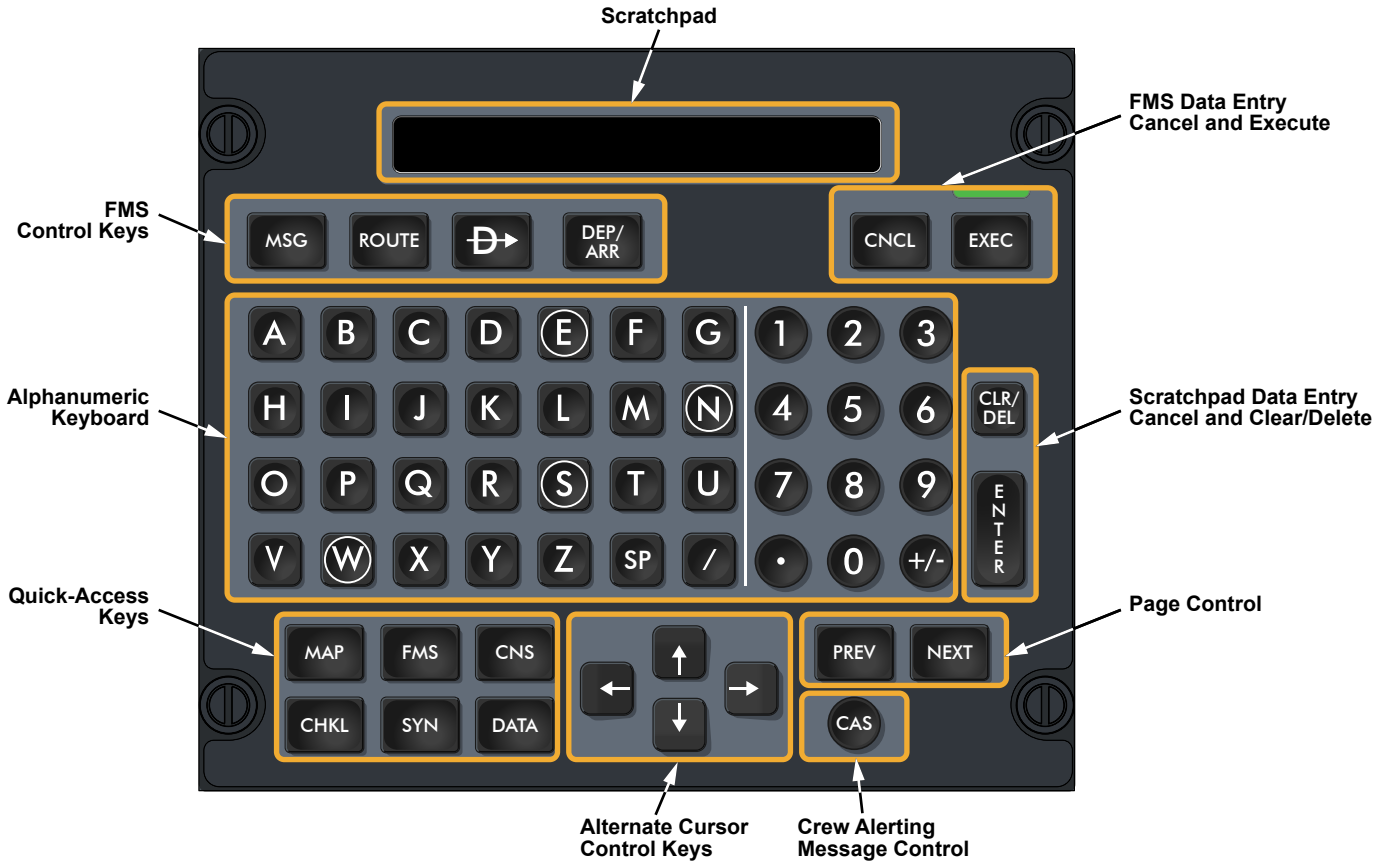

CS1_CS3_3160_001

Figure 43: Multifunction Keyboard Panel

Reversion Switch Panel

The reversion switch panel (RSP) includes a knob and select switches that interact with the operation of the display units and cursors.

The DISPLAY switch has the following selections and function:

- REV - Reversion mode. Displays the PFD and EICAS on a single display, following a multiple DU failure. The reversion mode increases the number of multifunction windows (MFWs) available to use
- NORM - Normal position. Arms the automatic display reversion function
- SWAP - moves the EICAS page to the adjacent inner DU

The L and R CURSOR switches are used to disable operation of the associated display cursor. A green status light is illuminated when the associated cursor switch is selected.

Copyright © Bombardier Inc.

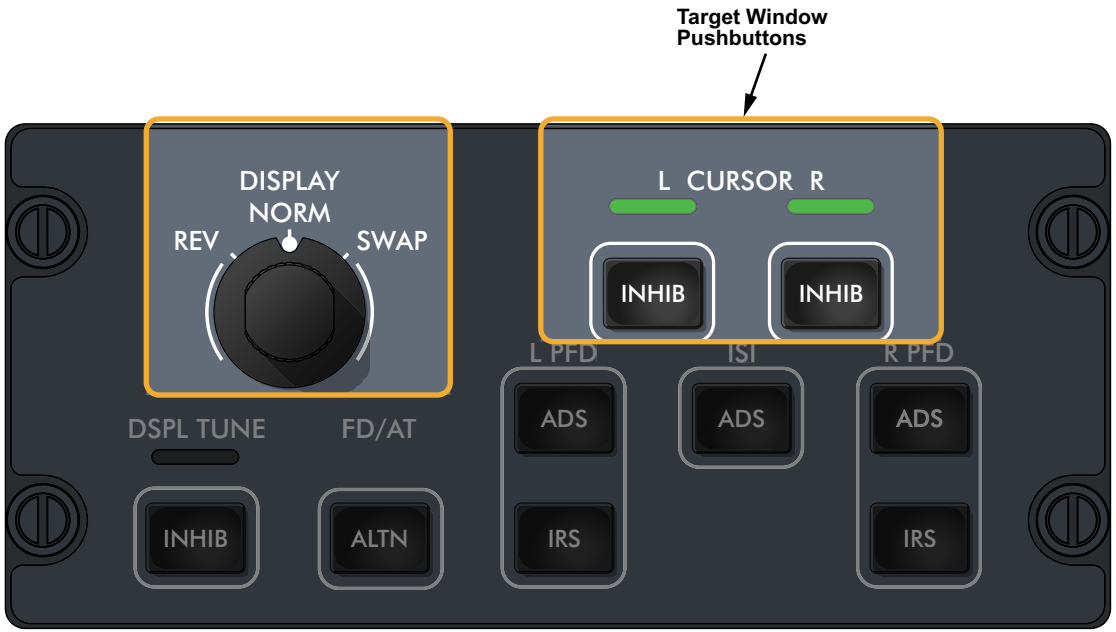

CS1_CS3_3160_004

Figure 44: Reversion Switch Panel

OPERATION

Cursor Operation

Each pilot uses the cursor control panel (CCP) trackball to control the movement of an onscreen cursor. The cursor remains out of view until it is enabled by selection of a display select switch (DSPL SEL) of the onside CCP or by selection of MFW format from quick-access keys on the MKP or CTP.

Visually, the left and right cursors are similar in size, however the copilot cursor is rotated 45°. Onscreen cursor movement is possible in the horizontal, vertical, and diagonal directions.

Each pilot can only control the onside cursor and has no control of the cross-side cursor. Pilot cursor operation is permitted on DU 2 while copilot cursor operation is permitted on DU 3.

Cursor operation is not permitted on the primary flight display (PFD) nor is it permitted on the EICAS display. Single cursor movement within a multifunction window (MFW) is unrestricted.

The lower DU (DU 5) is identified as a common cursor display, allowing either cursor to control content. However, the two cursors cannot occupy the same MFW on DU 5 simultaneously. Movement of a cursor into an MFW already occupied by the opposite cursor causes the original cursor to be removed or bumped off the MFW.

Each cursor has a home or default position where it is placed when it is bumped from a display, or following crew selection from the onside CCP. The CCP includes two DSPL SEL switches (LWR, UPR), used to show the onside cursor on the upper DU or lower MFW of DU 5.

The upper (UPR) switch places the cursor in the upper corner of the onside upper DU. The lower (LWR) switch places the cursor in the upper left corner of the onside MFW of the lower DU. Either switch may be selected at any time to return the cursor to the associated home position.

A cursor delay, also referred to as a speed bump, is incorporated into cursor movement as it approaches the edge of a DU. The crew must continue rolling the trackball in the intended direction of travel in order to cross the speed bump. This momentary stop in travel prevents the inadvertent movement of the cursor outside of the DU when working on the edge of a display.

To avoid clutter and prevent the masking of information, a cursor becomes inactive and disappears from view after 3 minutes of inactivity. When reactivated, the cursor blooms momentarily to make it easier to locate.

Cursor Inhibit

A malfunctioning cursor may be disabled by using the applicable cursor inhibit switch (L, R CURSOR INHIB) located on the reversion switch panel (RSP).

Pushing a switch inhibits operation of the applicable cursor trackball and illuminates the associated green status light, located above it. Pushing the switch a second time restores cursor trackball operation.

A CAS status message of CURSOR INHIB is displayed while the button is pushed and operation is inhibited.

Alternate Cursor Control

The directional arrow keys, located on each MKP, provide an alternate to the CCP trackball for positioning the cursor on the selected DU.

Each key moves the cursor in the specified direction. Pushing two adjacent keys results in diagonal movement. On MFW formats requiring data entry, for example the flight management system (FMS), the arrow keys allow for tabbed or fixed increment movement of the cursor.

Copyright © Bombardier Inc.

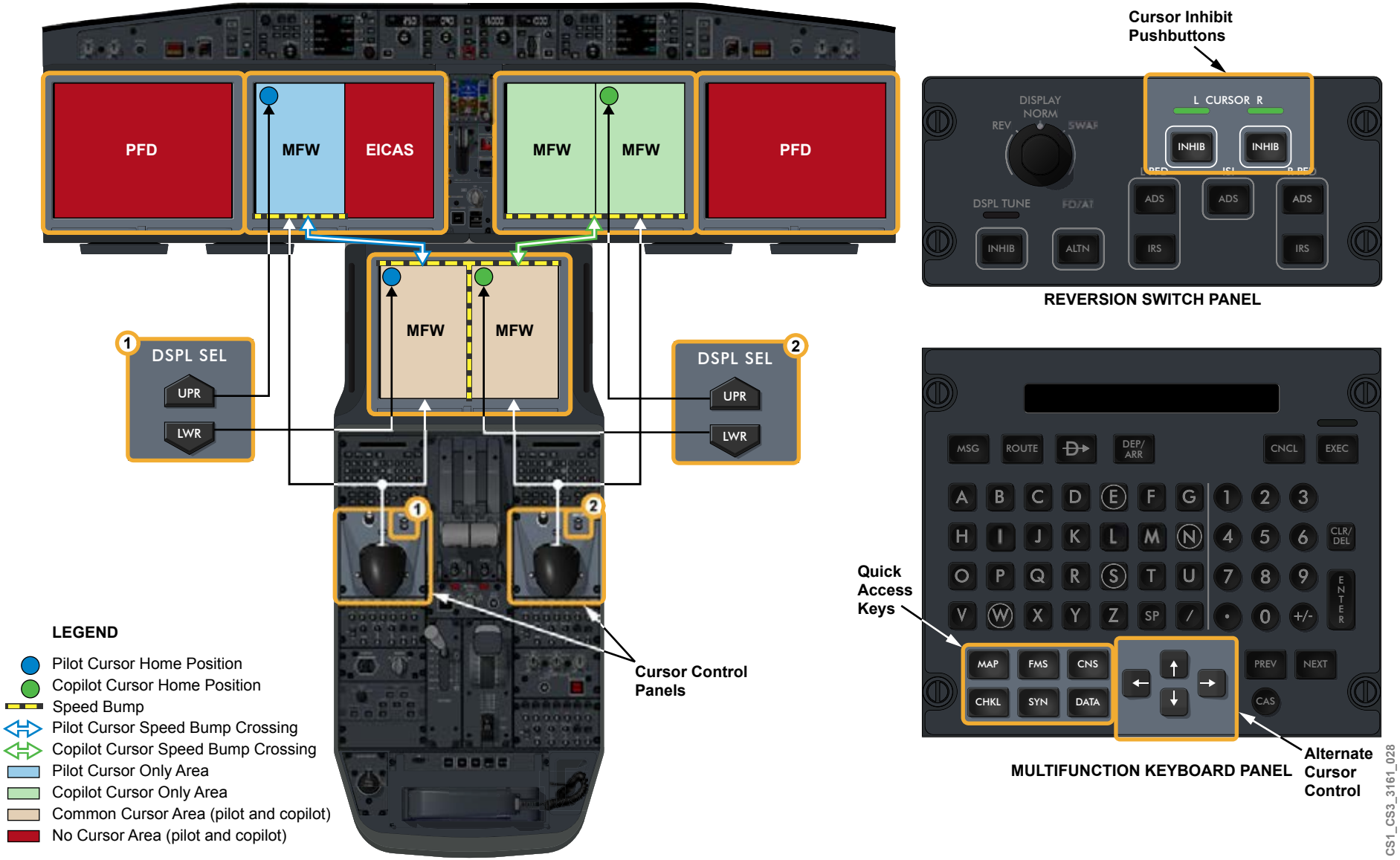

Figure 45: General Cursor Operation

MFW FORMAT CONTROL

Each inner display unit (DU 2, DU 3) and the lower display unit (DU 5) are capable of displaying a multifunction window (MFW). The MFW formats can be controlled using the:

- Cursor control panels (CCPs)
- Multifunction keyboard panels (MKPs)
- Control tuning panels (CTPs)

The CCP MENU button is used to display the menu on the selected MFW. The MKP QAKs are normally used to control the DU 5 onside MFW. If DU 5 fails, the MKP QAKs can be used to control the MFWs on DU 2 and DU 3.

The CTP QAKs are used to control their respective onside inboard DU. The INBD DSPLY L (R) buttons select which side of the DU displays the QAK selection.

Each of the MFW format options provide access to the following displays:

- MAP - to display a map or plan view
- FMS - to display the flight management system pages
- CNS - to display the communication/navigation/surveillance page
- CHKL - to display the electronic checklist
- SYN - to display synoptic pages
- DATA - to display charts and documents

Selection of most formats results in a display of cursor-selectable sub format options across the top of the display.

The DATA selection includes a secondary drop-down menu list for a selection of formats used primarily on ground.

Copyright © Bombardier Inc.

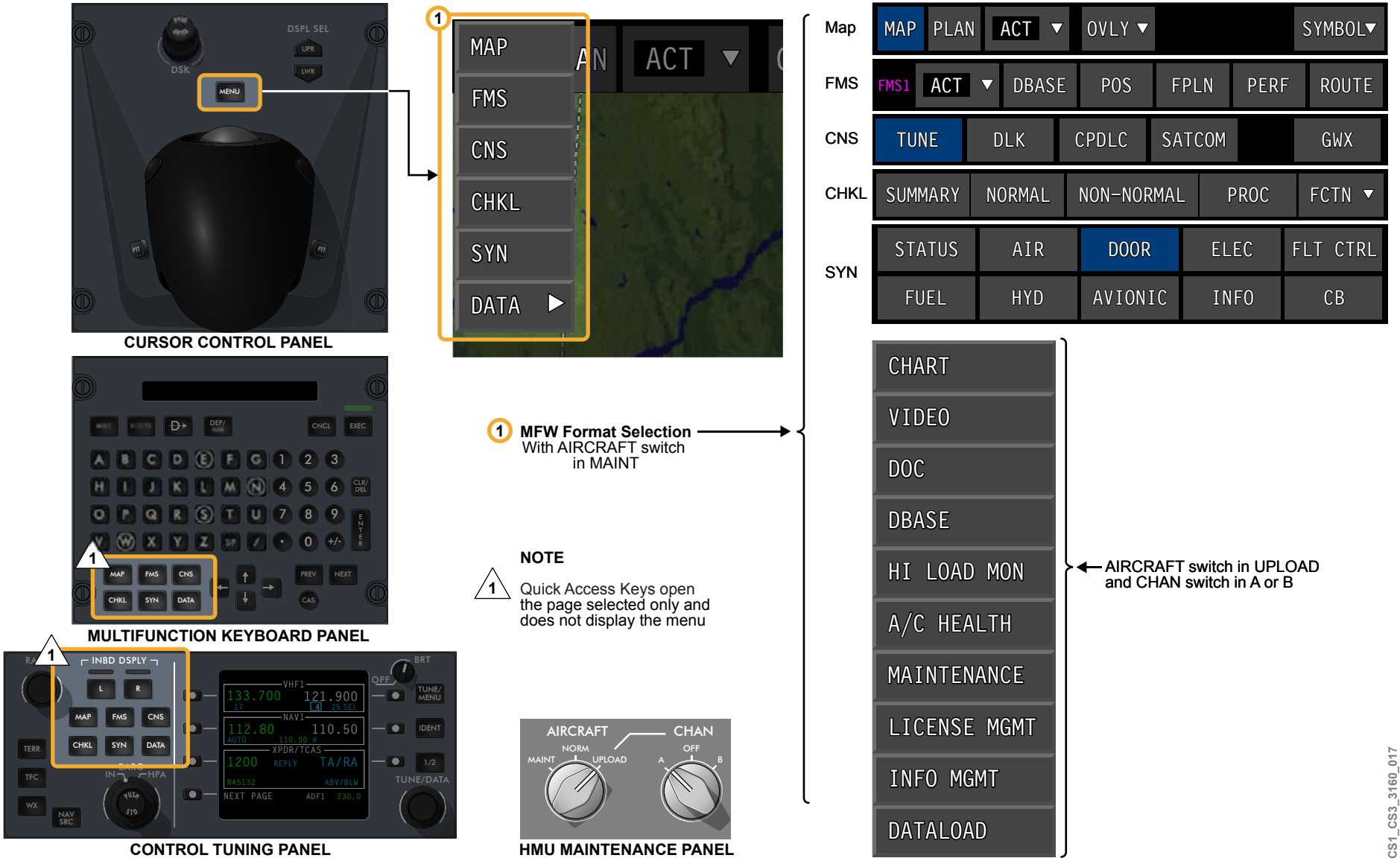

Figure 46: MFW Formats and Sub Menus

MFW FORMAT MERGING

Certain MFW formats, when selected side-by-side on the same DU, will automatically merge across the MFW divider to occupy the full display unit area. The following half MFW formats may be merged:

- Map format
- Chart format
- Document reader

Copyright © Bombardier Inc.

FULL FORMAT MFWs

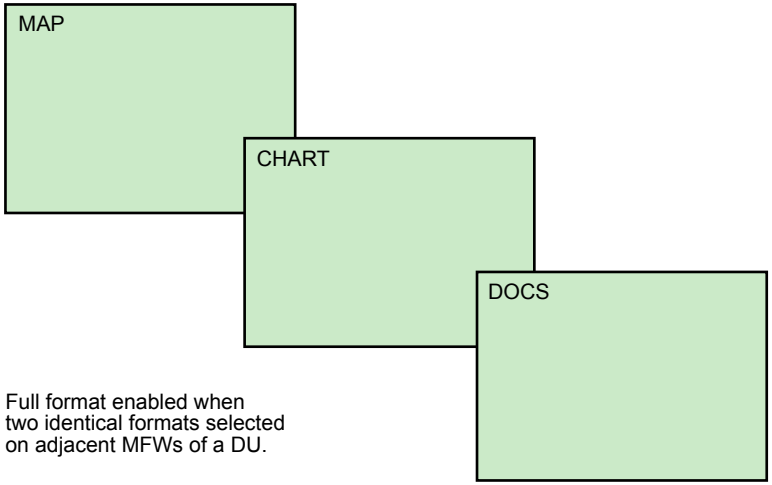

Full format enabled when
two identical formats selected
on adjacent MFWs of a DU.

CS1_CS3_3160_010

Figure 47: Full Multifunction Window Format

MFW GRAPHIC USER INTERFACE

A number of MFW format options are provided with on-screen, cursor-selectable items such as pushbuttons, toggle selections, data entry fields, drop-down lists, and graphic objects. This graphic user interface provides the crew with the ability to enter and select onscreen data, and to adapt the presentation to specific requirements.

For example, the SYMBOL icon, located at the top right of the MAP format provides access to a drop-down list of smart objects, which may be enabled on the MAP display. The objects are enabled following check box selection and identified by a cyan indication and check mark.

Once enabled, the smart object is displayed using similar symbology to what is found on printed maps and charts. They are located on the display relative to their geographical position and the flight path of the aircraft.

Copyright © Bombardier Inc.

Element	Symbol
Political Boundary	---------
Airport	
Nearest Airport	
Navaid – VOR	
Navaid – VOR-DME	
Navaid – VORTAC	
Navaid – TACAN	
Navaid – DME	
Navaid – NDB	
Terminal Waypoint	
Waypoint	
Flyover Waypoint	
Intersection	
Hi Airway	J595
Lo Airway	V346
Range To Altitude Arc	
Obstacle	
City	
Controlled Airspace	
Special Use Airspace (SUA)	
Temporary Flight Restrictions (TFR)	

CS1_CS3_3161_031

Figure 48: Graphical Symbol Selection

MFW OVERLAY MENU

The MAP format sub menu includes an overlay (OVLY) button selection used to select data from a drop-down menu, including traffic alert and collision avoidance system (TCAS) traffic data, and weather radar. Selected data is shown relative to aircraft position and heading.

Copyright © Bombardier Inc.

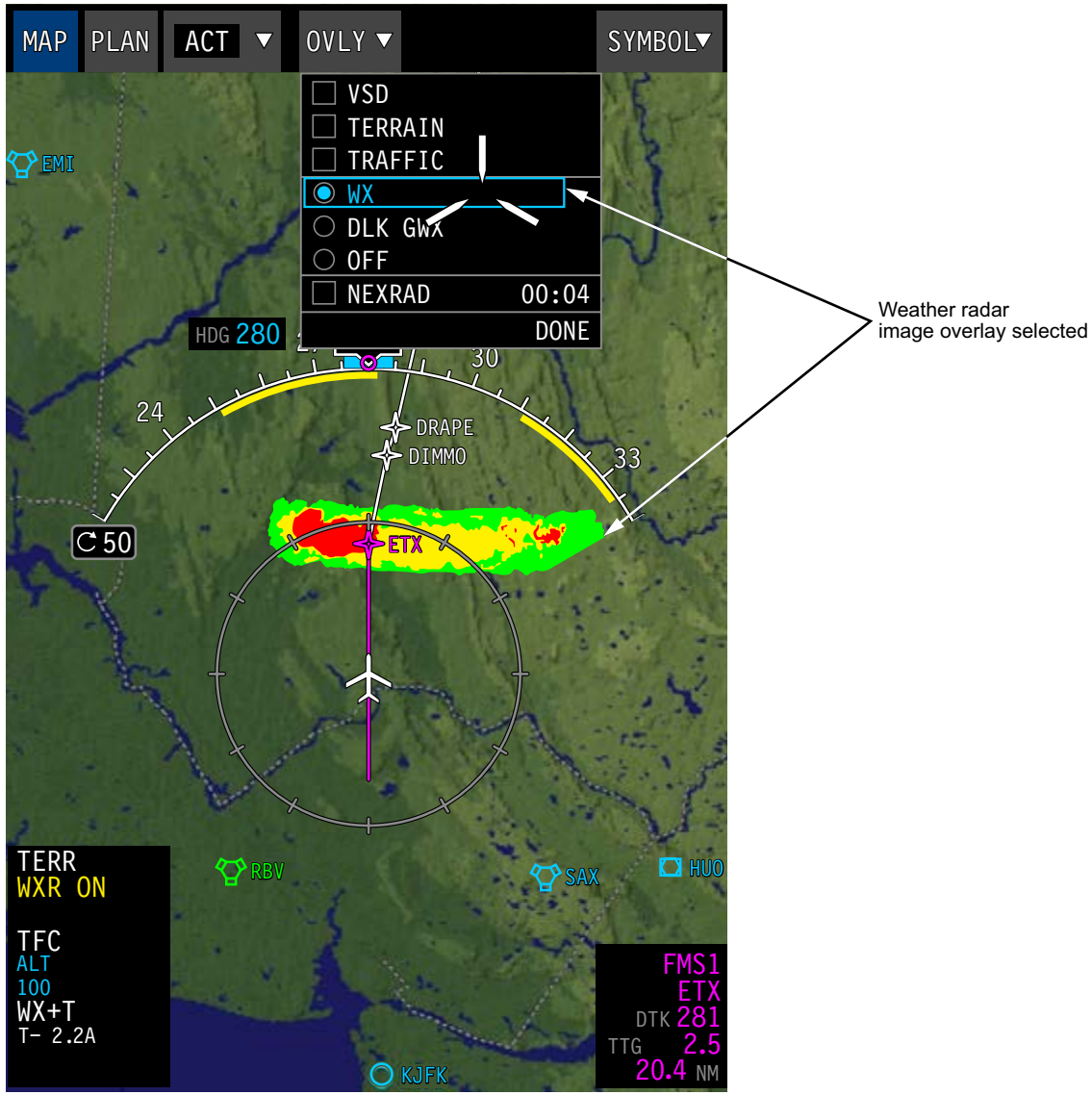

CS1_CS3_3160_018

Figure 49: Overlay Selection

DETAILED DESCRIPTION

AUTOMATIC DISPLAY REVERSION

Automatic display reversion function is triggered by a display unit (DU) failure or a DU being selected OFF. It makes sure critical PFD and EICAS displays remain in view in the event of a single or multiple DU failure.

Automatic display reversion is available when the DISPLAY switch on the reversion switch panel (RSP) is in the NORM.position.

The automatic display reversion keeps a full PFD for as long as possible using the remaining DUs after one and two display failures. A half PFD format is used whenever the PFD is reconfigured to an inboard or lower display. The EICAS moves to an opposite side DU before moving it to DU 5.

Single DU Failure

When one outboard DU fails (DU 1 or DU 4), the PFD moves inboard in a half PFD format. When one of the inboard DUs (DU 2 or DU 3) is inoperative, the full PFD with a mini-map is displayed on the outboard DU (DU 1 or DU 4). As a MAP is not available on the adjacent DU, the full PFD with mini-map includes MAP overlays to improve situational awareness.

In the event of a failure of a single DU showing EICAS, the automatic reversion function reconfigures the opposite side inner DU to display the EICAS.

A failure of DU 5 or DU 3 has no effect on the remaining display unit configurations since it does not normally show the PFD or EICAS.

Copyright © Bombardier Inc.

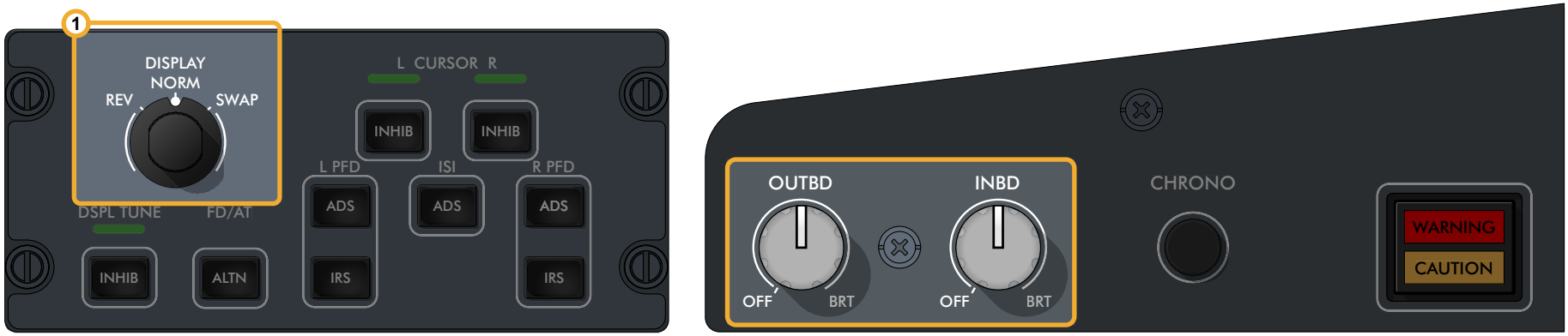

REVERSION SWITCH PANEL

GLARESHIELD PANEL

1 DISPLAY must be in normal (NORM) position for operation of automatic display reversion

FAILURE OF SINGLE DU DISPLAYING PFD

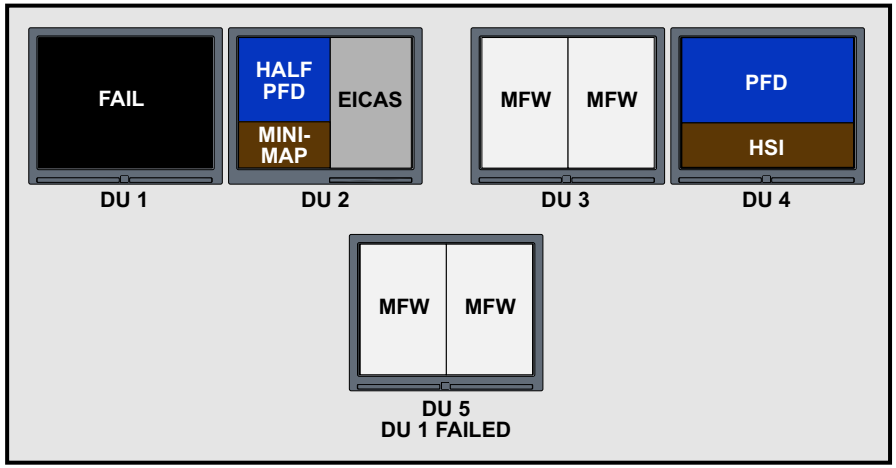

FAILURE OF SINGLE DU DISPLAYING EICAS

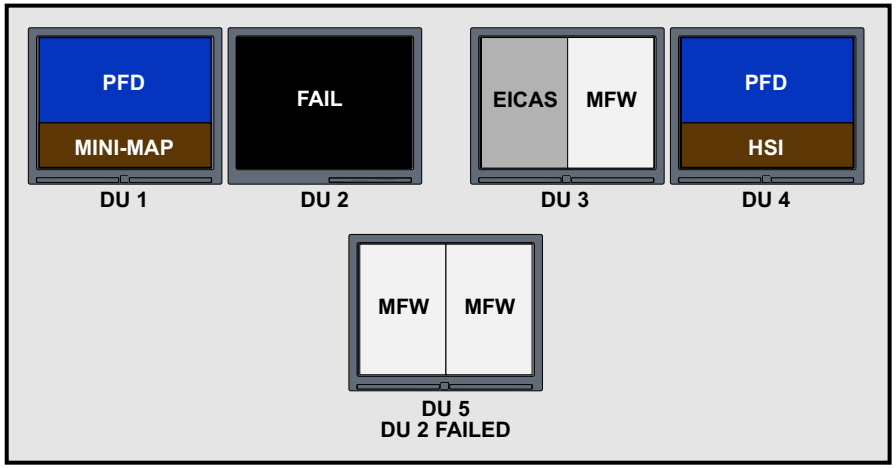

CS1_CS3_3160_003

Figure 50: Automatic Display Reversion

Half PFD Format

In the half PFD format, the ADI field of view lateral and vertical scaling remain unchanged. The HSI display is dependent on the adjacent display in the DU partition. When a MAP is displayed adjacent to the half PFD on the same DU, there is no change in the compass and navigation information displayed.

HSI Mini-Map

When an EICAS, synoptic page, ECL, or FMS page are displayed adjacent to the half PFD on the same DU, the HSI compass changes to a mini-map. The mini-map displays navigation source, FMS route and waypoints, and TCAS traffic. Map range, TERRAIN, and WXR overlays are selectable from the associated CTP, as required. Terrain is automatically displayed during a TAWS event.

FMS HSI messages appear on the HSI mini-map, however, the messages cannot be actioned since cursor control on the mini-map is not possible. In order to acknowledge messages, MAP must be selected on an MFW so the cursor control can be used to open the dialog boxes.

EICAS Display

In automatic display reversion, the EICAS information layout and content is not affected. The EICAS display always remains in view, although its location may change depending on the number of failed displays.

Copyright © Bombardier Inc.

DU

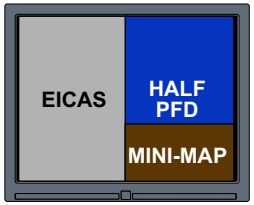

DU

MINI-MAP WITH TERR AND WX OVERLAY

AMBER FMS AND HSI MESSAGES

HALF PFD WITH MFW

HALF PFD WITH EICAS

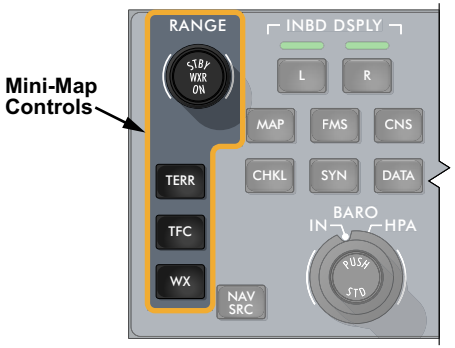

CONTROL TUNING PANEL

CS1_CS3_3160_020

Figure 51: Half PFD Display

Copyright © Bombardier Inc.
CS130-21.02-06.00-121418

Multiple DU Failure

Priority continues to be given to a full size presentation of PFD and EICAS in the event of a multiple DU failure. When possible, the system automatically reconfigures the remaining displays as required to satisfy this priority.

Two Inoperative Display Units

When two inoperative DUs are not in a pair, the remaining DUs reconfigure to show a half or full PFD, MFW, and EICAS.

In any unpaired DU failure scenario, if an MFW (MAP) is not available on the adjacent DU, the PFD, full or half, is displayed with a mini-map.

When a pair of DUs (DU 1 and DU 2, or DU 3 and DU 4) fails:

The PFD is shown on the outboard DU, and the EICAS and MFW is shown on the inboard DU

A half PFD and MFW are shown on DU 5

Three Inoperative Display Units

When the two operating DUs are not in a pair, a half PFD, the EICAS, and the MFW are shown. The location of the MFW and the EICAS depend on which DUs have failed.

With unpaired operating DUs, if an MFW (MAP) is not available on the adjacent DU, the half PFD is presented with a mini-map.

When the operating DUs are on the left side, the full PFD is shown on DU 1, and the EICAS and MFW are shown on DU 2.

When the operating DUs are on the right side, the full PFD is shown on DU 4, and the EICAS and MFW are shown on DU 3.

Four Inoperative Display Units

If four DUs are inoperative, the remaining DU displays the PFD in half format, a mini-map, and the EICAS.

Copyright © Bombardier Inc.

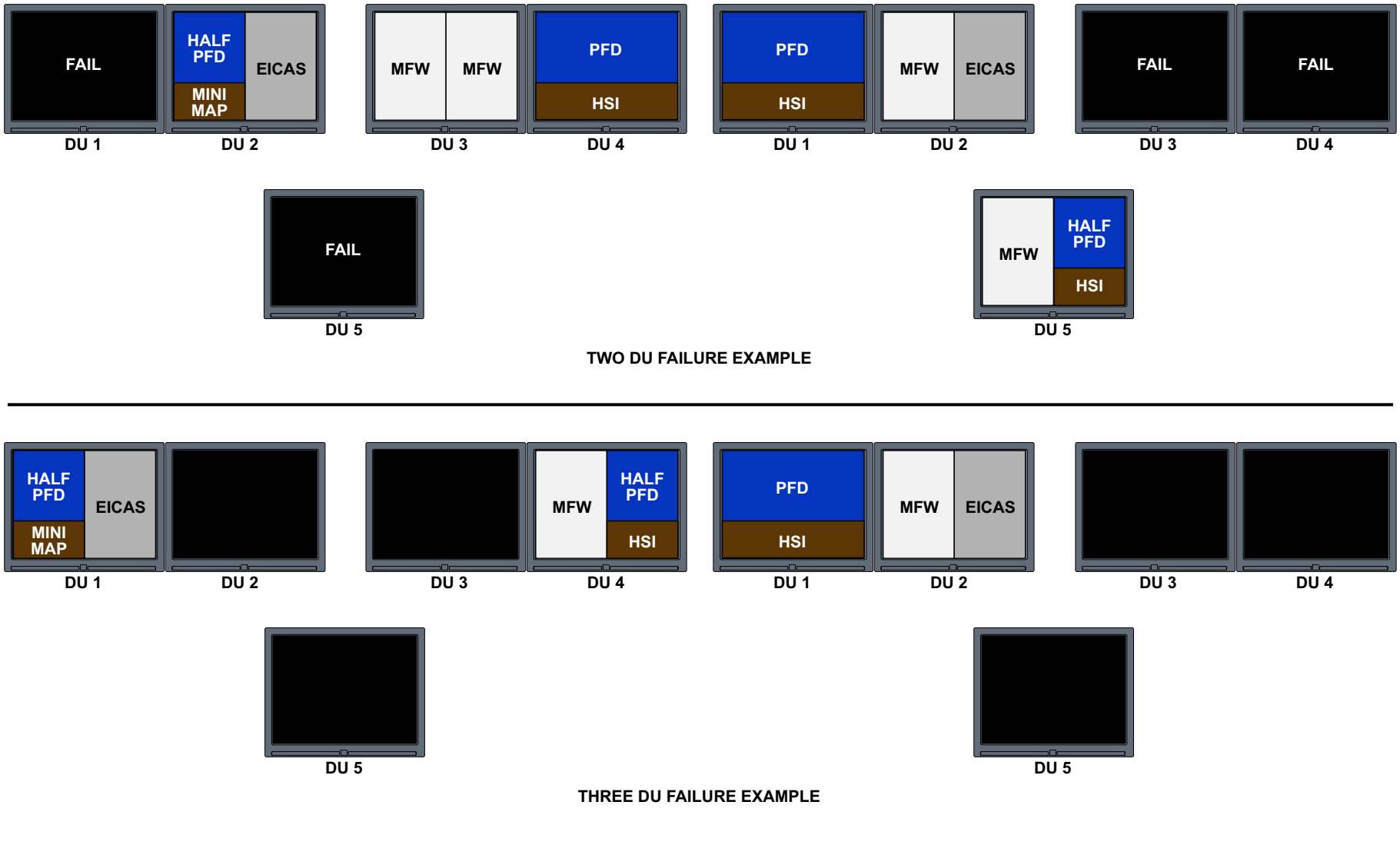

Figure 52: Multiple DU Failure

Reversion Mode Selection

The reversion switch panel (RSP) DISPLAY switch REV position is used to increase the number of available MFWs in the event of multiple DU failures.

The REV position selection is only available following two or three DU failures where one or two full PFDs are displayed.

When active, selecting the switch to REV causes a full PFD to be displayed as a half PFD format along with an MFW MAP display. The MAP display can be changed to any other available MFW format.

A SELECTION INACTIVE message is displayed on the PFD if REV is selected without two or three failed DUs.

Copyright © Bombardier Inc.

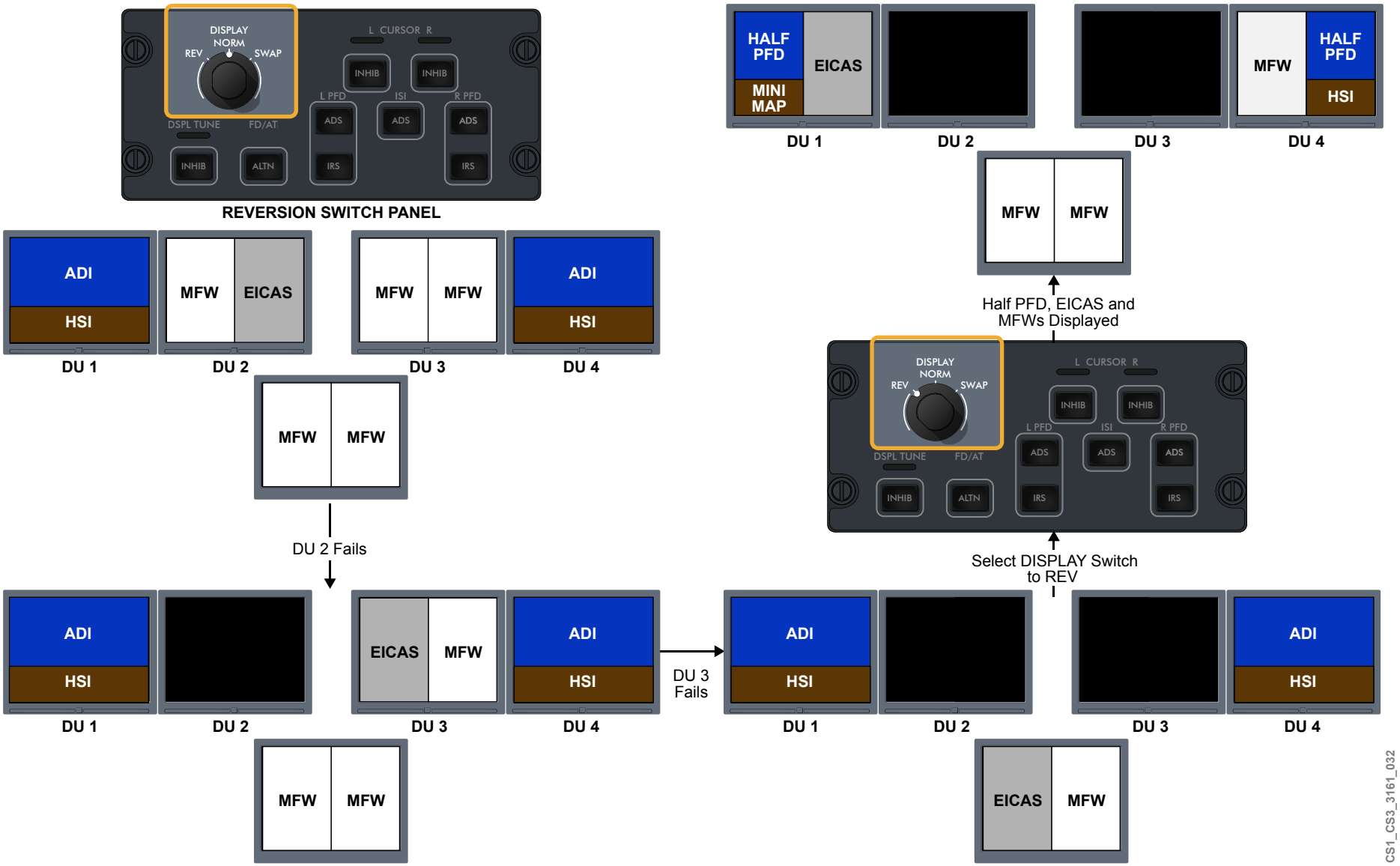

Figure 53: Reversion Selection

Reversion Mode Message

When the DISPLAY rotary switch is set to REV, and the reversion function is unavailable, a DISPLAY REV MISCONFIG status message is displayed on the EICAS. A SELECTION INACTIVE message is also displayed on the PFD, on the top right portion of the HSI.

If the DISPLAY rotary switch is set to SWAP, and the swap function is not available (no DU 2, DU 3, or DU 5 failures), a SELECTION INACTIVE message is displayed on the PFD, on the top right of the HSI.

A DISPLAY REV MISCONFIG status message is also displayed to indicate that the DISPLAY switch is in the REV position and the current display configuration does not support a reversionary configuration.

Copyright © Bombardier Inc.

DISPLAY REV MISCONFIG

EICAS

CS1_CS3_3160_021

Figure 54: Reversion Mode Message

MONITORING AND TESTS

The display units monitor and compare displayed information. Information that differs between displays beyond a set amount, results in the display of a comparator flag. Failed or missing data is annunciated by a failed flag.

DISPLAY COMPARATOR

Each display unit contains software that continually compares critical data being displayed with similar data on the DU of the other crew member.

A comparator flag comes into view when the difference between the pilot-side and copilot-side reference data is more than the limit. Monitored reference data includes:

- HDG (heading)
- PIT, ROL, ATT (attitude)
- ALT (altitude)
- IAS (indicated airspeed)
- FMS (FMS LNAV deviation)
- VNAV (FMS LPV vertical deviation)
- VSPD (FMS vertical speed)
- RAD (Radio altitude)
- FPV (Flight path vector)
- ENG (Engine parameters)

A CAS caution message of EFIS MISCOMPARE is displayed if a display miscompare is detected. This is accompanied by the applicable flag on the PFD.

Copyright © Bombardier Inc.

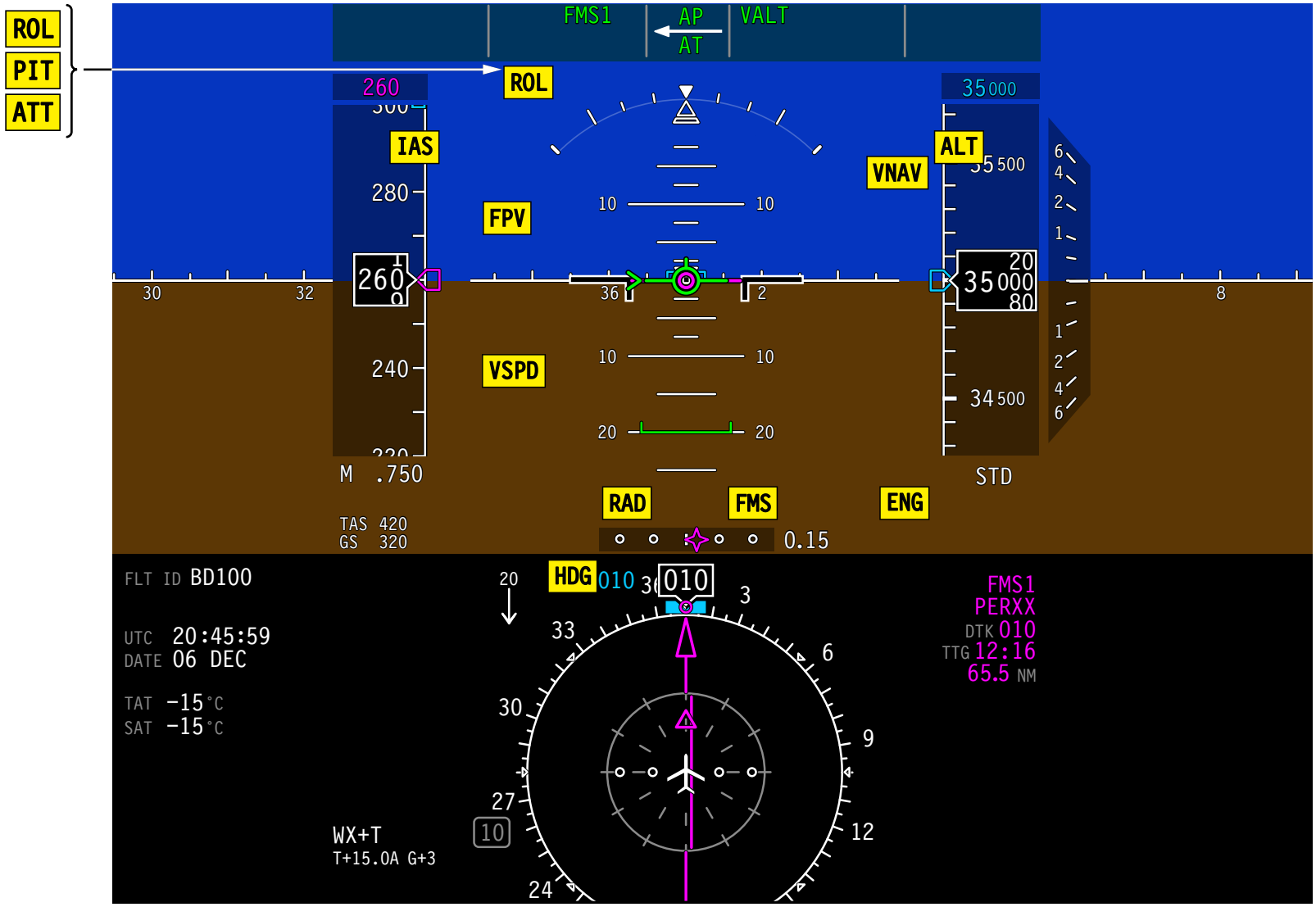

CS1_CS3_3160_012

Figure 55: Comparator Flags

FAILURE FLAGS

Should specific data fail the DU validity check due to a system or communications malfunction, the related data is removed and replaced with a red failure indication.

The FMS and VNV flags are replaced with a VOR, LOC flag, and GS flag, depending on the active navigation source and mode that was enabled at time of failure.

Copyright © Bombardier Inc.

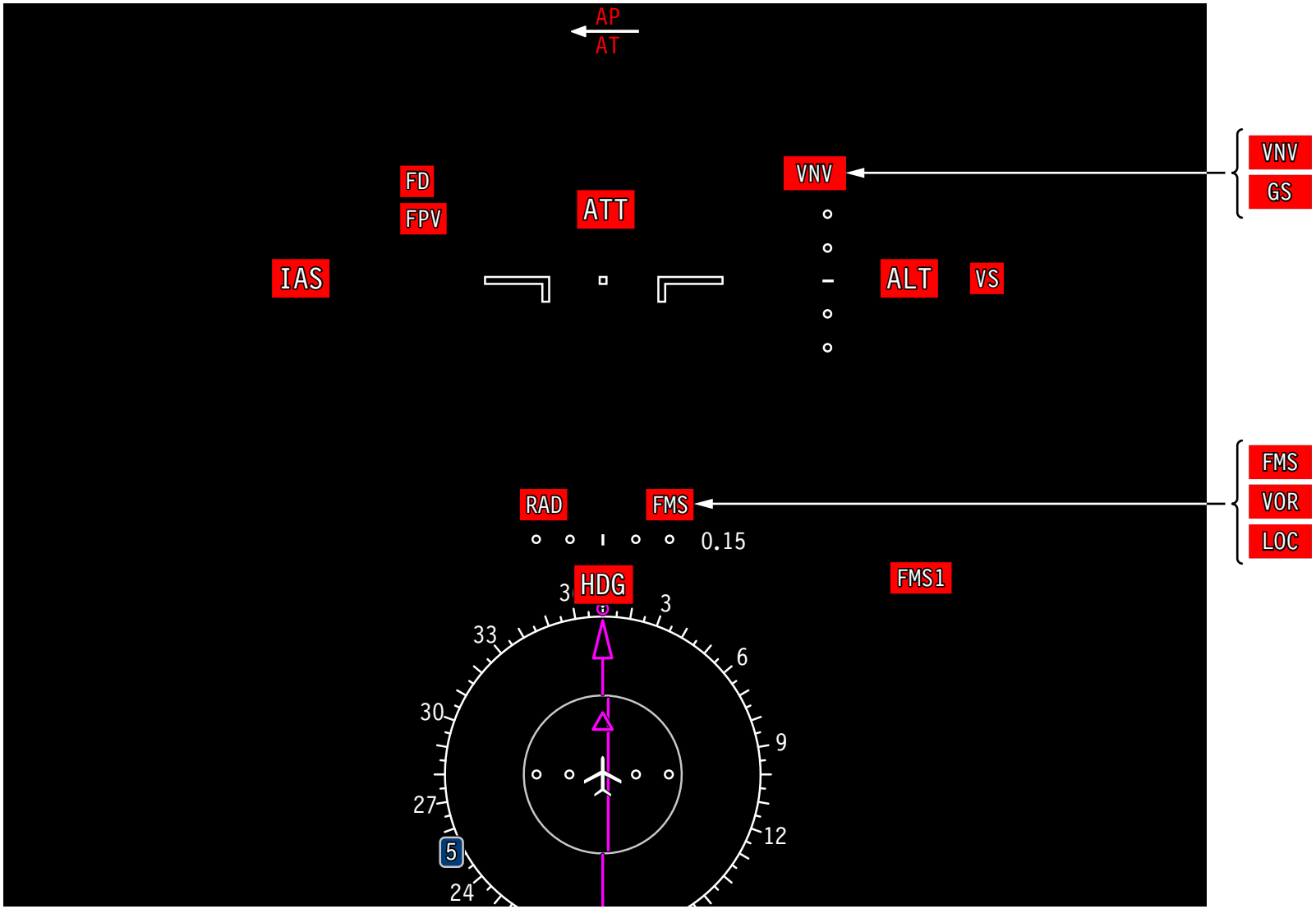

CS1_CS3_3160_013

Figure 56: Failure Flags

CAS MESSAGES

The following page provides the crew alerting system (CAS) messages for the electronic flight instrument system.

Table 6: CAUTION Messages

MESSAGE	LOGIC
ENG DSPL MISCOMPARE	Engine display parameters not in agreement between displays.
EFIS MISCOMPARE	Data source parameters miscompare found between left and right PFD.
EFIS COMPARATOR FAIL	EFIS comparator function failed.

Table 7: STATUS Message

MESSAGE	LOGIC
CURSOR INHIB	Left or right CCP cursor inhibited.

Copyright © Bombardier Inc.

31-40 ENGINE INDICATION AND CREW ALERTING SYSTEM

GENERAL DESCRIPTION

EICAS INTERFACE

The data concentration system (DCS) carries out data processing and networking for the engine indication and crew alerting system (EICAS).

The DCS architecture separates the left and right systems by routing left input signals to the left data concentrator unit module cabinet (DMC) and right input signals to the right DMC. Cross-talk buses between DMCs exchange data and allow comparison of crew alerting system (CAS) computations.

Powerplant and flight control data is also provided directly to the display units from the electronic engine control (EEC) and primary flight control computers (PFCC). This ensures that critical data remains displayed in the event of the loss of the data concentration system.

Each DMC contains the computation logic to control the crew alerting function including activation of aural tones, alerts, display of crew alerting messages, and activation of glareshield-mounted master warning/master caution lights. The DMC also controls the presentation of data on system synoptic pages.

The CAS aural alerting sends requests to the radio interface unit (RIU) to sound the aural alerts. The RIU stores the audio files and prioritizes the messages from CAS, terrain awareness and warning system (TAWS), traffic alert and collision avoidance system (TCAS), and windshear alerting, and other systems as required.

The EICAS data, including the display of synoptic pages and CAS messages, are provided to the avionics full duplex switched Ethernet (AFDX) network and routed to the integrated processing cabinets and display units.

The CAS key, located on the multifunction keyboard panel (MKP), is used to access or hide pages of CAS messages.

The reversion switch panel (RSP) is used to control the presentation of EICAS on an alternate DU or to select a compressed format.

AURAL WARNING INHIBIT

The aural warning inhibit function allows the crew to silence all aurals, (CAS, TAWS, and gear horn) in case of nuisance alerts, or failure of the aural system.

In normal operation the AURAL WARN INHIB pushbutton annunciator (PBA) is deselected, allowing aurals to be heard.

- Blank - indicates that the aural system is operating normally
- INHIB - pressing the PBA causes it to latch and illuminate white, indicating the aurals have been inhibited

The AURAL WARN INHIB is a guarded PBA, installed on the top left of the overhead panel.

Copyright © Bombardier Inc.

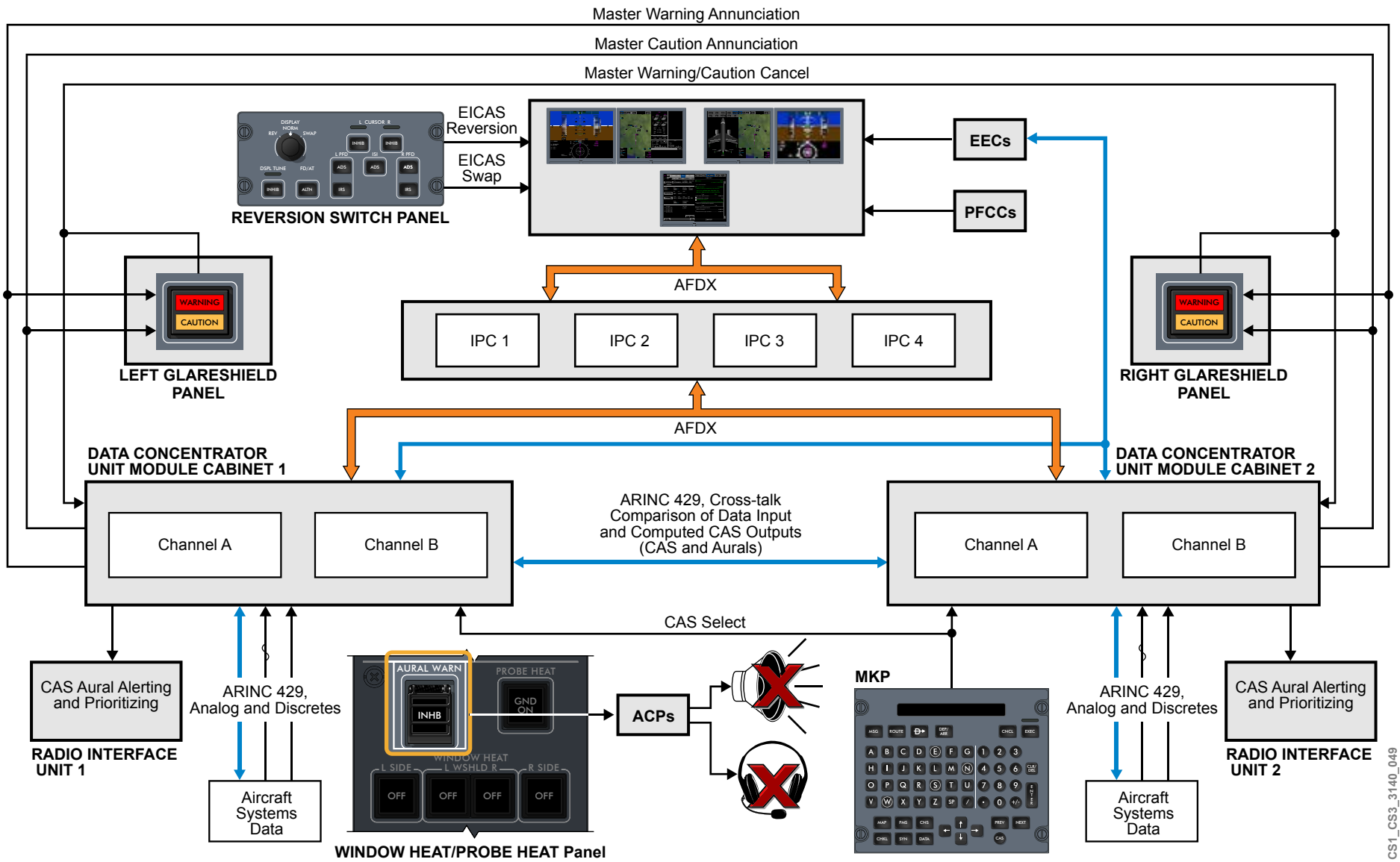

Figure 57: EICAS General Interface

DETAILED DESCRIPTION

DATA ACQUISITION AND DISTRIBUTION

The three input/output (I/O) modules primarily process analog and discrete inputs from airframe sensors and systems. Two I/O modules handle analog and discrete inputs while the third receives miscellaneous inputs, in addition to converting data to an ARINC 717 format for the flight data recorder.

The three I/O modules consolidate the input data to an ARINC 429 digital format and provide it via internal digital busing to the DMC channel data concentrator module (DCM).

The DCM also includes two I/O cards, which primarily receive input from avionics and units communicating via an ARINC 429 format. It consolidates the data provided by the I/O modules and supplies it to the resident applications including the engine indication and crew alerting system (EICAS). The DCM provides the data output to the integrated processing system via the AFDX network.

Copyright © Bombardier Inc.

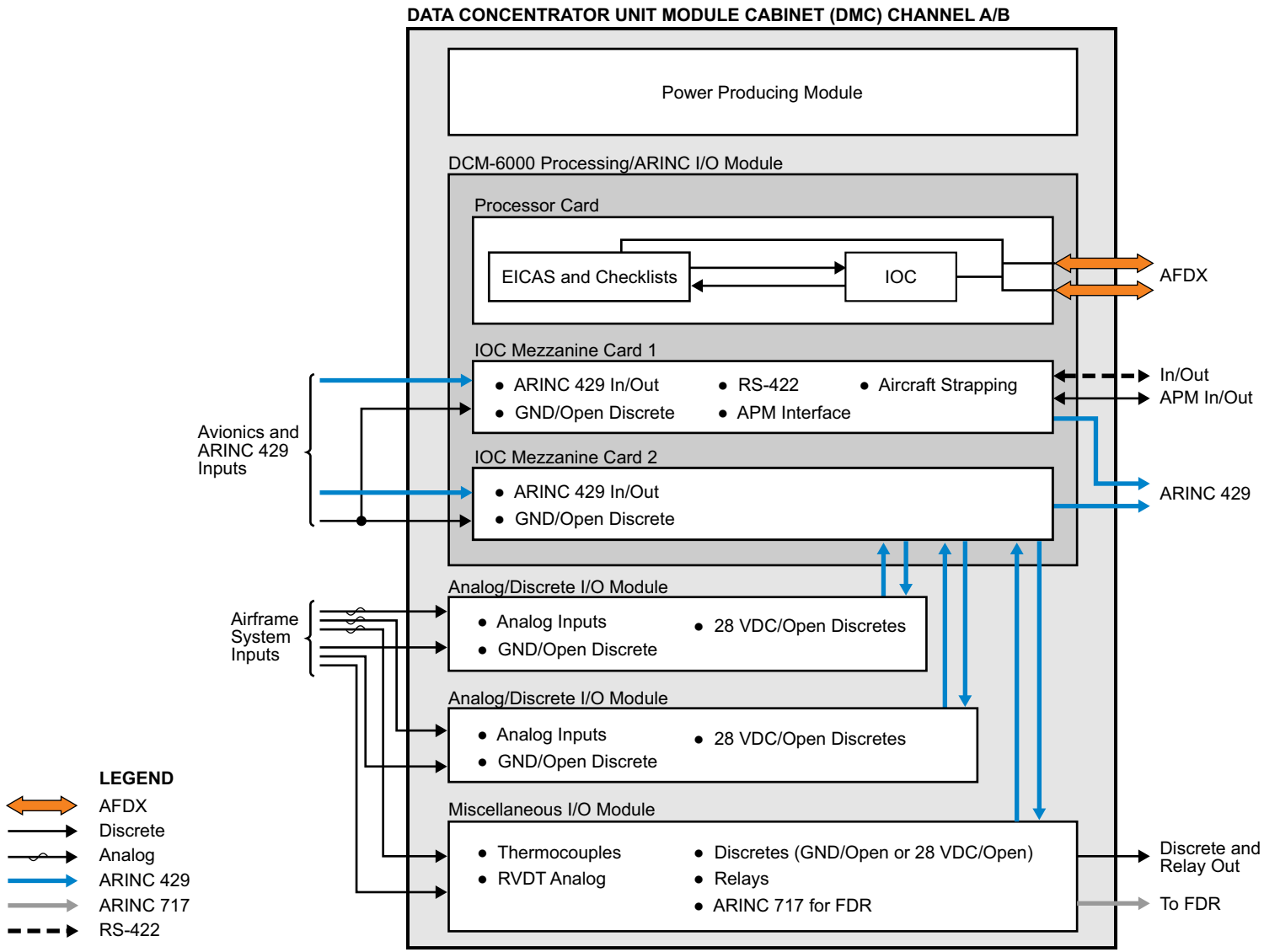

Figure 58: Data Concentrator Unit Module Cabinet EICAS Interface

CAS Message and Aural Processing

To avoid unnecessary crew distraction, many caution and advisory messages are prevented from being displayed during takeoff and/or landing flight phase. Inhibited crew alerting system (CAS) messages relate to conditions that do not require immediate crew action for the particular flight phase.

Non-critical CAS messages are inhibited during the takeoff roll when the airspeed is greater than 80 kt. The inhibit is removed when the aircraft altitude exceeds 400 ft AGL or 25 seconds after the aircraft is weight-off-wheels (WOFFW). The inhibit is also removed if the airspeed decreases to less than 50 kt during the takeoff roll.

Non-critical CAS messages are inhibited during landing when the aircraft descends below 400 ft AGL. The inhibit is removed during landing roll out or when a go-around is initiated. The inhibit function times out after 60 seconds if the normal logic does not operate.

The CAS logic contained within the data concentrator module (DCM) determines when an aural request is sent to the radio interface unit (RIU). The RIU manages overall aural prioritization, including tones, attensons, and voice alerts initiated by the crew alerting system, stall protection system, terrain awareness and warning system (TAWS), and traffic surveillance system (TSS).

A CAS comparator function monitors the CAS message logic from the other DCM channels for agreement. A CAS processing miscompare between channels results in an advisory message of CAS MISCOMPARE.

The CAS message logic must be satisfied before a message command is provided. Following the initiation of a CAS message, the DCM determines if there is an aural associated with the message. The type and priority level of the aural is routed to the RIU via two ARINC 429 data buses.

All caution and warning messages are accompanied by an attenson. Attensons are either a single or triple chime. If there are voice or aural tones that accompany the caution or warning message, the attenson is played before the voice or aural tone.

The DCM removes the CAS aural when:

- Condition causing the message no longer exists
- In the case of cancellable aurals, the master WARNING/CAUTION PBA is pressed

Copyright © Bombardier Inc.

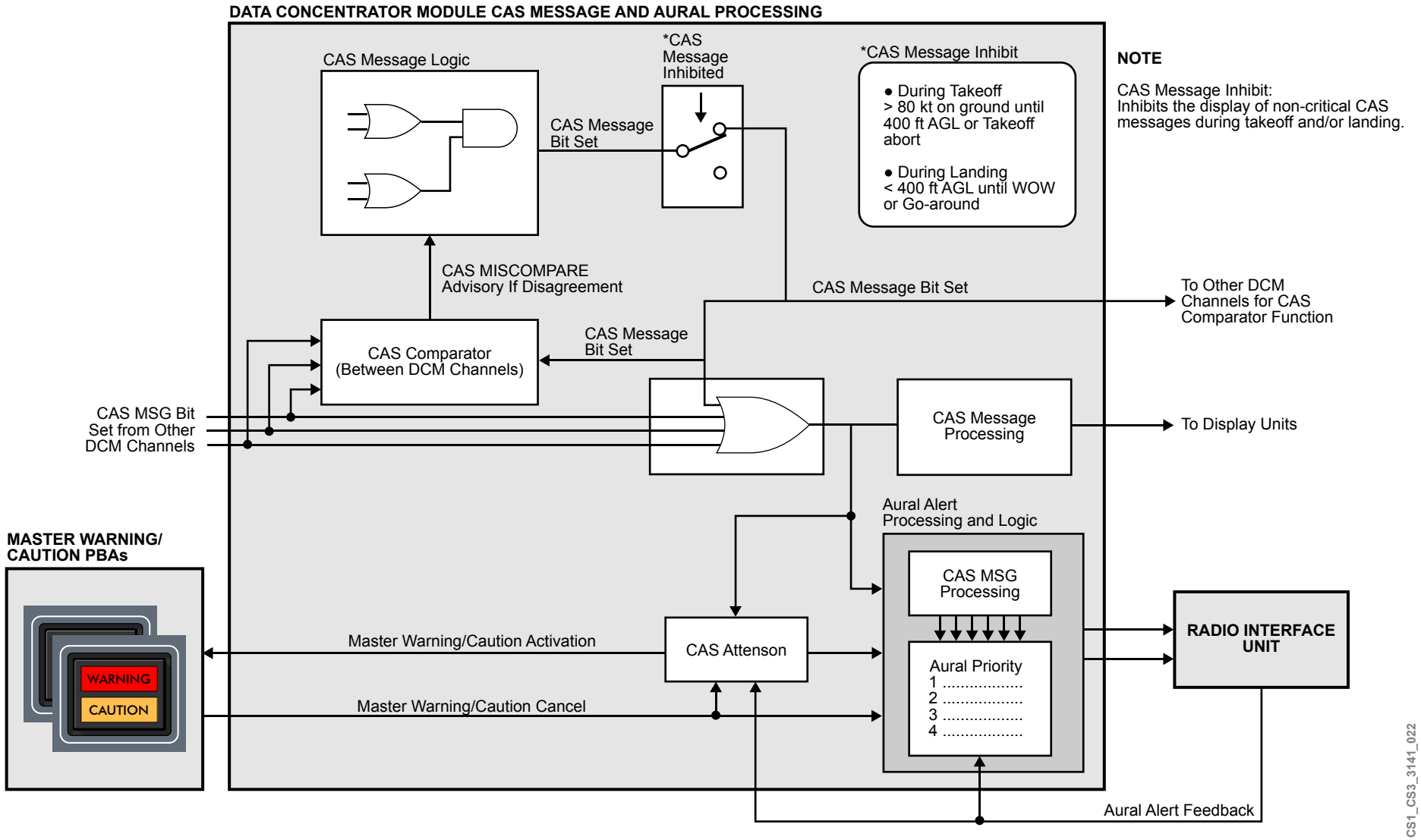

Figure 59: EICAS Message/Aural Processing

Flight Phases

The flight phase information is used in the control of aircraft systems, onboard maintenance system (OMS) reporting, and crew alerting message (CAS) inhibiting. The DMCs determines the flight phase based on aircraft configuration, pressure altitude, and radio altitude. There are 10 phases of flight:

- Maintenance
- Ground
- Taxi
- Takeoff
- Climb
- Cruise
- Approach
- Landing
- Roll out
- Go-around

Copyright © Bombardier Inc.

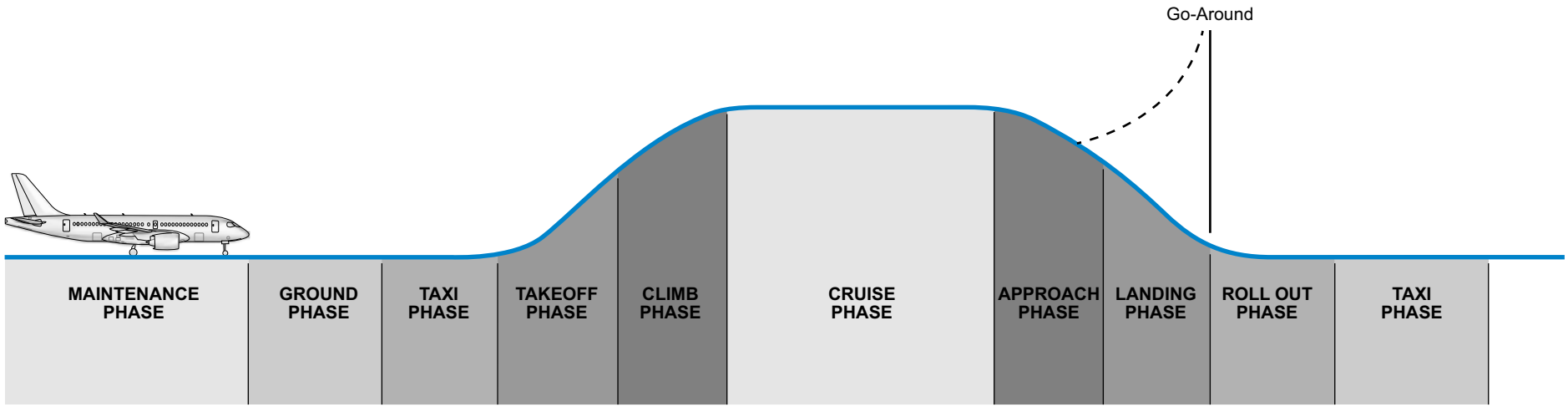

CS1_CS3_3100_026

Figure 60: Phases of Flight

Ground

The aircraft is on the ground. The DMC sets the ground phase whenever external power is applied or when the following is true:

- Weight-on-wheels (WOW)
- Engines are off
- Maintenance switch is OFF

The external power discrete puts the aircraft in the ground phase even when the aircraft is on jacks

Maintenance

The maintenance phase is the same as the ground phase except that the maintenance switch is ON.

Taxi

The taxi phase is when the aircraft is moving using engine power. The DMC sets the taxi flight phase when the following is true:

- WOW
- One or both engine running
- N1 is less than 55%
- Airspeed less than 50 kt

Takeoff

The takeoff phase starts when both thrust lever angles greater than 23°. The takeoff phase ends when the aircraft reaches an altitude of 400 ft above ground level (AGL). The DMC sets the takeoff phase when the following is true:

- WOW
- Both engine ON/OFF switches in ON position
- Both engines running
- Both thrust lever angles greater than 23°
- Both engine N1 is equal to or greater than 55%

Copyright © Bombardier Inc.

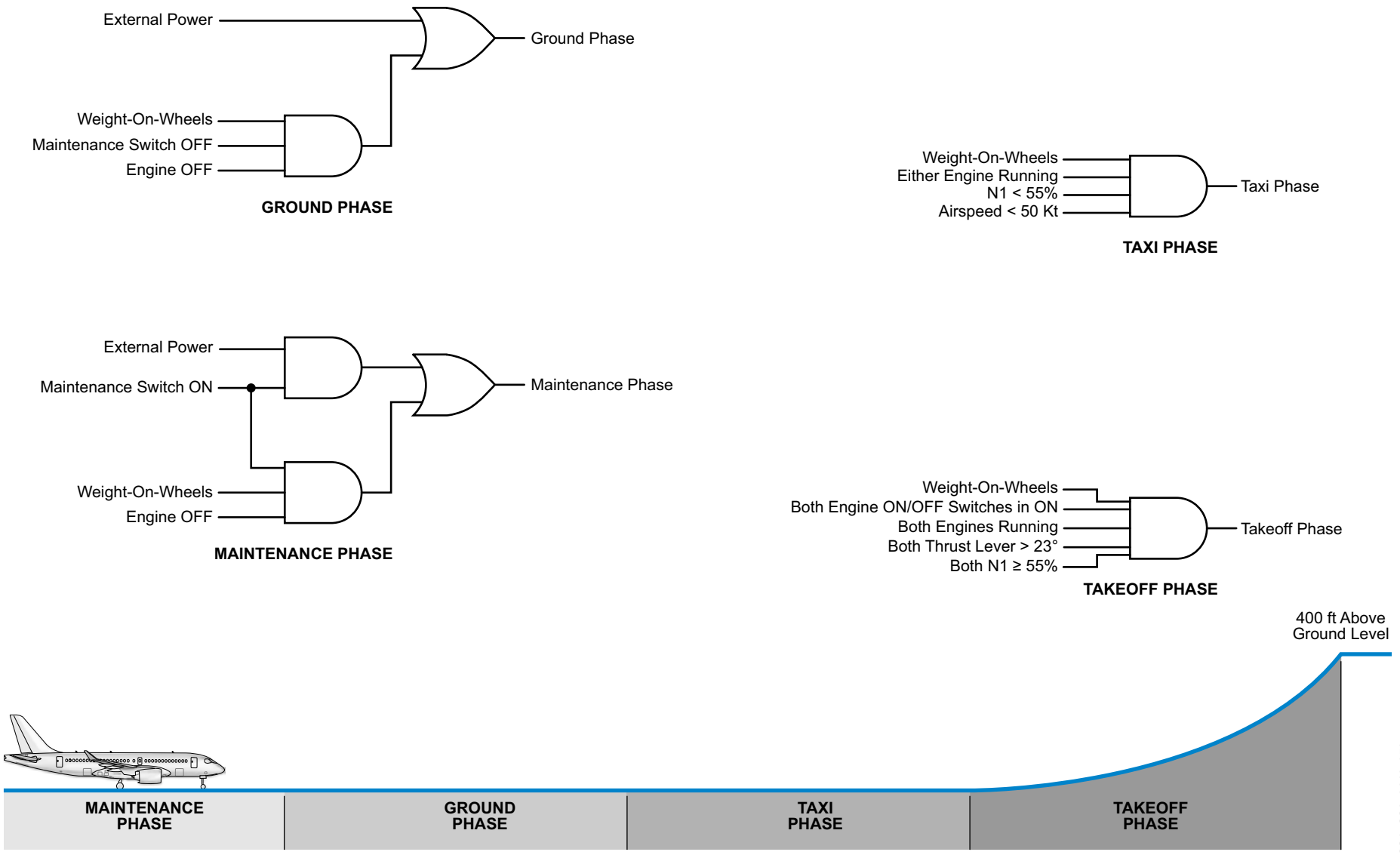

Figure 61: Maintenance, Ground, Taxi, and Takeoff Phases of Flight

Copyright © Bombardier Inc.

Climb

The DMC sets the climb phase when the aircraft is above 400 ft AGL. The climb flight phase remains active until the following conditions are true:

- Landing gear is up and locked
- Slats and flaps are up

Cruise

In the cruise phase, the aircraft is operating in a clean configuration. The DMC sets the cruise phase when the landing gear is up and locked, and the flaps and slats are up.

Approach

The approach flight phase begins when the aircraft is above 400 ft radio altitude and either the flap/slat lever is moved to position 1 or greater, or the landing gear is extended. The approach flight phase ends when the aircraft descends below 400 ft. radio altitude

Landing

The landing phase starts when the aircraft descends below 400 ft radio altitude. The landing phase ends with main gear touchdown providing a weight-on-wheels (WOW) signal, or when a go-around is initiated.

Rollout

The DMC sets the roll out phase when the aircraft touches down and ends when the aircraft speed is less than 50 kt or a go-around is initiated.

Go-Around

Go-around can be initiated during the following flight phases:

- Approach
- Landing
- Rollout

A go-around is initiated by advancing either or both thrust levers beyond 46°. If the aircraft is in the approach phase, the climb phase is set. If the aircraft is in the landing phase, the climb phase is set when the aircraft altitude is greater than 400 ft AGL.

If the aircraft is on a rollout and go-around is initiated, the takeoff phase is set.

Copyright © Bombardier Inc.

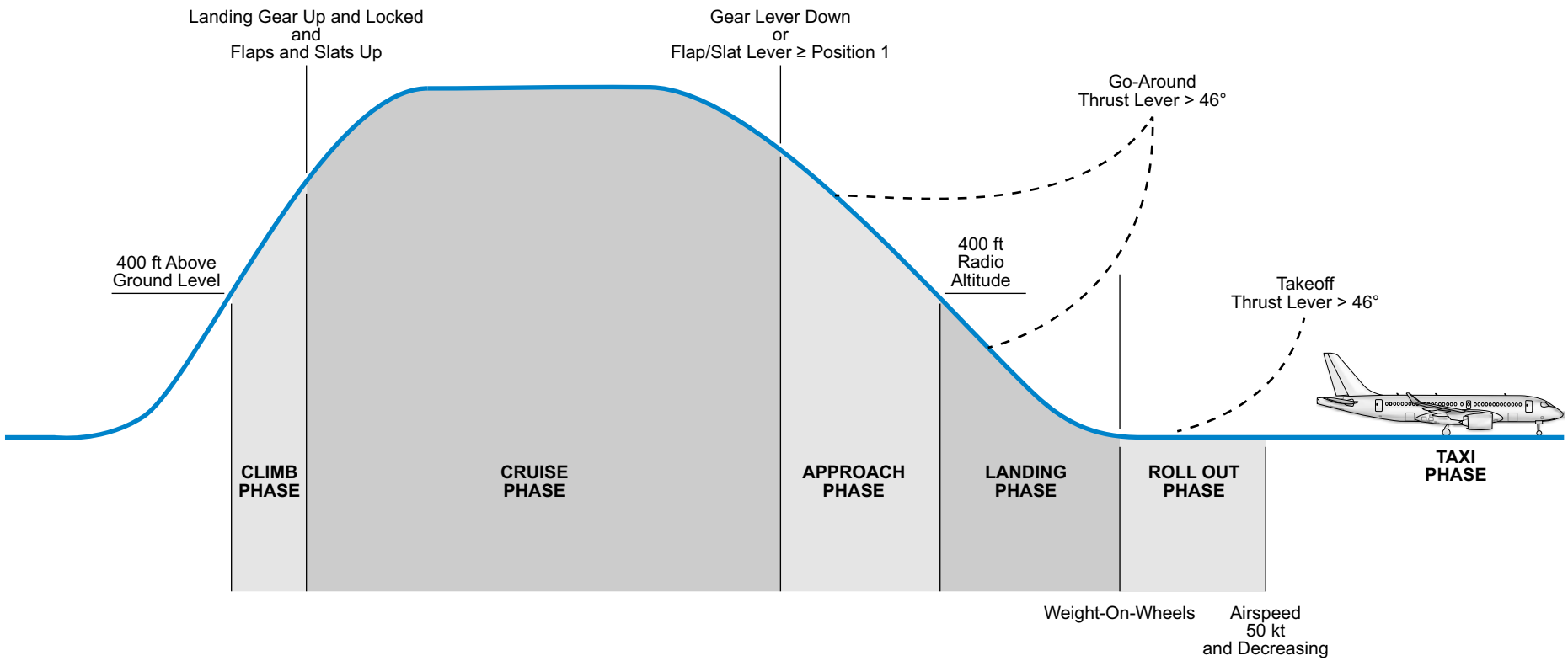

Figure 62: Climb, Cruise, Approach, Landing, Go-Around, and Roll Out Phases of Flight

Copyright © Bombardier Inc.

Takeoff Configuration Warning

Certain CAS warning messages and aural alerts are triggered should a takeoff be attempted while the aircraft is not in a correct configuration.

Copyright © Bombardier Inc.

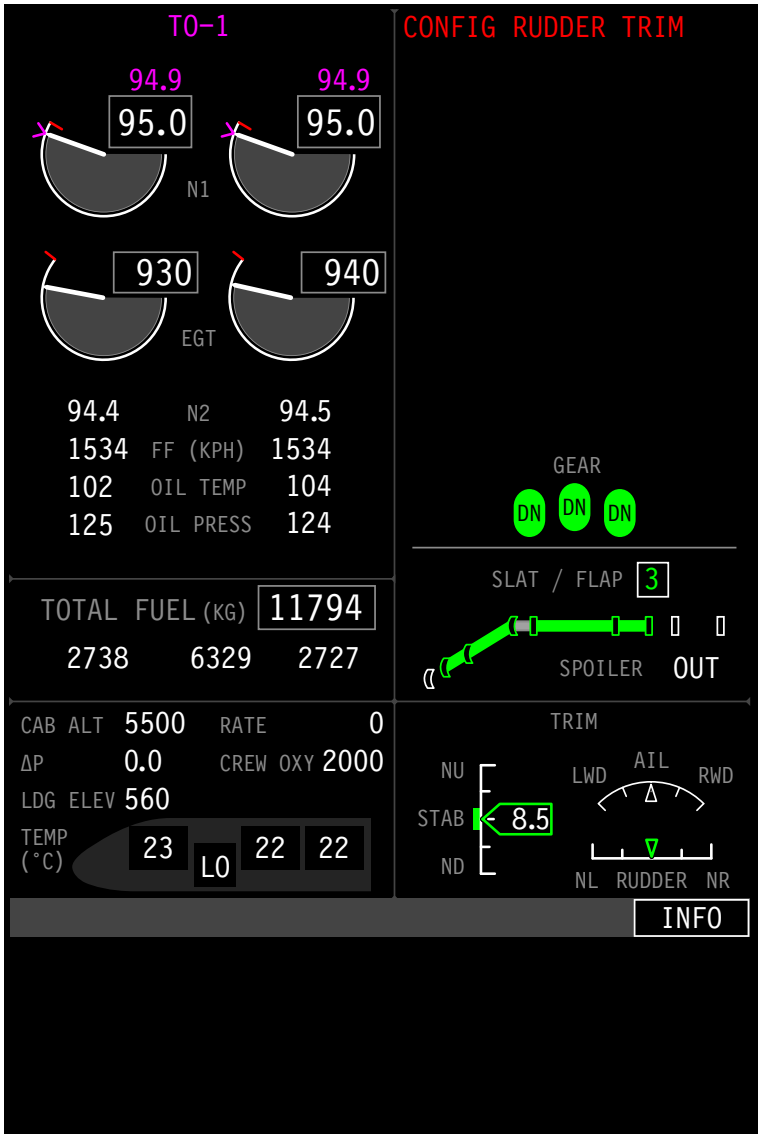

EICAS MESSAGE	LOGIC	AURAL MESSAGES
CONFIG AP	Takeoff attempted with autopilot engaged.	“CONFIG AUTOPILOT”
CONFIG BRAKE	Takeoff attempted with park brake applied.	“CONFIG BRAKE”
CONFIG FLAP	Slat/Flap not configured for takeoff.	“CONFIG FLAP”
CONFIG RUDDER TRIM	Rudder trim position out of range of takeoff.	“CONFIG TRIM”
CONFIG SIDESTICK	L or R sidestick priority latched at takeoff.	“CONFIG SIDESTICK”
CONFIG SPOILER	Spoiler (MFS or GS) out at takeoff.	“CONFIG SPOILER
CONFIG STAB TRIM	Stab trim position out of range for takeoff.	“CONFIG TRIM”

CS1_CS3_3141_023

Figure 63: Takeoff Configuration Warning

Copyright © Bombardier Inc.

Master WARNING/CAUTION Pushbutton Annunciators

The data concentrator unit module cabinet (DMC) controls the operation of the glareshield-mounted master WARNING/CAUTION pushbutton annunciators (PBAs). When a CAS warning or caution message is generated, the associated WARNING or CAUTION light flashes to alert the crew.

Pressing either PBA turns off the warning or caution light on both PBAs. The master channel output is also deactivated when the original condition causing the CAS alert is cleared.

All data concentrator modules (DCMs) are capable of controlling the master warning/master caution PBAs, however only one DCM serves as the master. Normally, channel B of the right DMC is the master control for the master warning/master caution PBAs.

The operation reverts to another channel in the event of a failure. The order of master control priority is as follows:

- Right DMC channel B
- Right DMC channel A
- Left DMC channel B
- Left DMC channel A

In the event of a loss of cross-talk between cabinets, channel B of each DMC will control the onside operation of the PBAs.

The PBAs are tested during a LAMP TEST selection from the AVIONIC synoptic page. The lights do not flash during a test selection.

Copyright © Bombardier Inc.

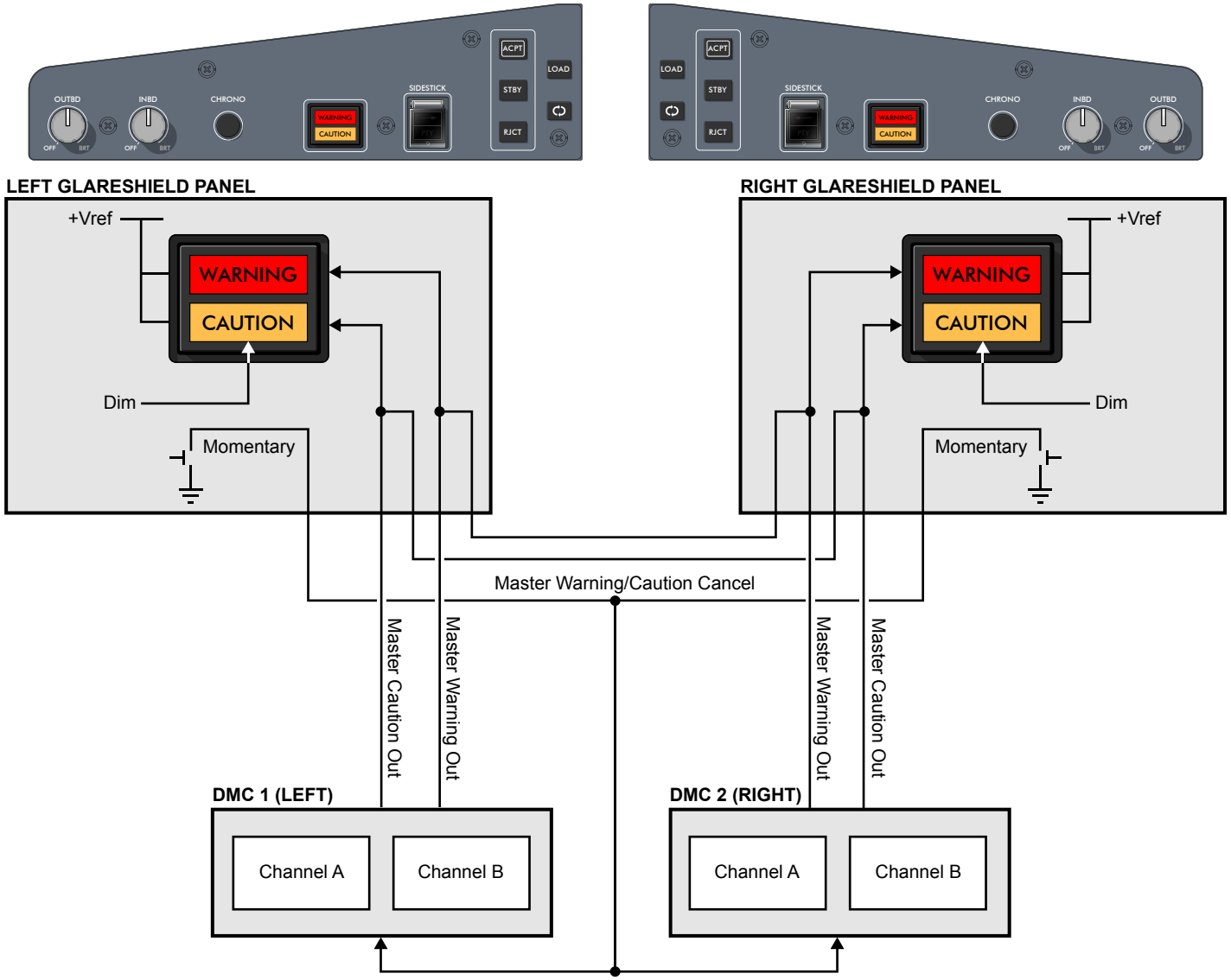

Figure 64: Master WARNING/CAUTION PBA Operation

OPERATION

EICAS PAGE CONTROL

The EICAS display is normally presented on the inner MFW of DU 2. Alternatively, the EICAS display can be moved to the inner MFW of DU 3. This is carried out using the DISPLAY switch (REV/NORM/SWAP positions) on the reversion switch panel.

The switch is normally operated in the NORM position. Rotating the switch to SWAP moves the EICAS display to DU 3 and moves the previous MFW display on DU 3 to DU 2.

Copyright © Bombardier Inc.

REVERSION SWITCH PANEL

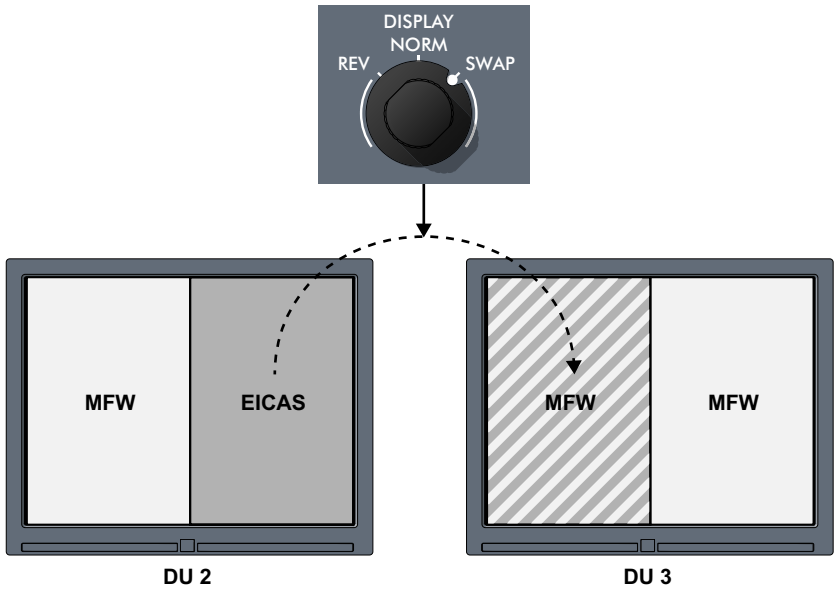

CS1_CS3_3140_002

Figure 65: EICAS Swap Position

CAS MESSAGE LIST CONTROL

The crew alerting message stack is provided with sufficient space to display a total of 18 CAS messages. This is reduced to 12 CAS messages, when the gear and slat/flap information is shown.

Additional pages of CAS messages are added as required. This is indicated by a message of PAGE XX/YY at the bottom of the message stack indicating that other pages are available. When reaching the last page, selecting the CAS button again hides the CAS messages. The white CAS message indicates that the CAS messages are hidden.

The CAS button, located on the multifunction keyboard panel (MKP), is used to control the display of CAS messages. When a large stack of messages is being displayed, the crew may select the CAS button to hide messages. Warning messages may not be removed from view. Selecting the CAS button again returns any hidden messages to view. New CAS messages are displayed, regardless of the CAS button selection. CAS button selection hides or shows messages or access to the next page of a CAS message stack when additional messages exist. CAS warning messages will remain in view at all times. They may not be hidden.

The CAS button is also used to navigate between multiple pages of CAS messages when they exist.

Copyright © Bombardier Inc.

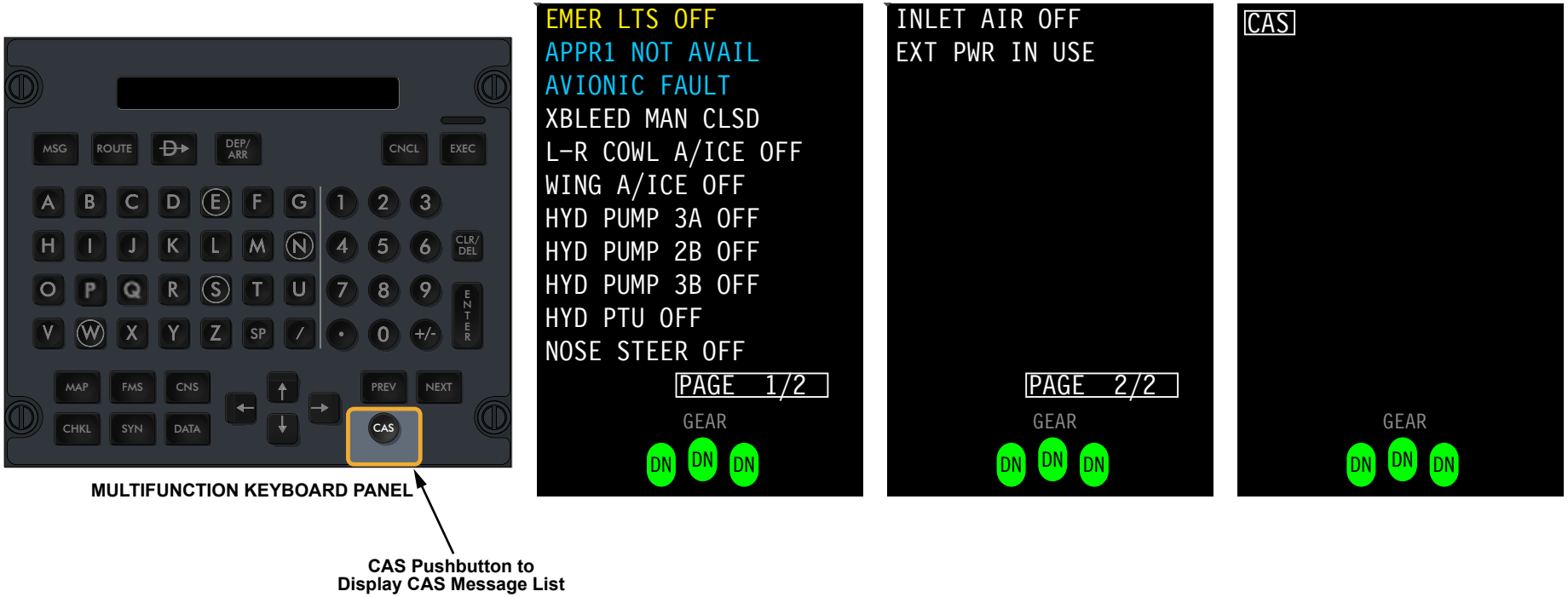

Figure 66: CAS Message List Display Control

INFO MESSAGES

An INFO flag is displayed on the communication bar of the EICAS page. The flag is displayed when a new INFO message is present on the INFO page. It is removed when no messages exist or the new message has been acknowledged. New messages are accompanied by an associated CAS advisory message for additional crew awareness.

New messages are moved into the PREVIOUSLY ACKNOWLEDGED area of the INFO page once they are acknowledged. Acknowledgment of an INFO message is carried out by accessing the INFO synoptic page and selecting the ACKNOWLEDGE soft key at the bottom of the page.

INFO messages are cleared when the system is fixed and/or the aircraft does not carry the failure anymore. No action is required to clear a message from the INFO list.

The INFO flag is inhibited during takeoff and landing, similar to the CAS messages. If the EICAS is in the compressed format, the INFO flag does not appear.

Copyright © Bombardier Inc.

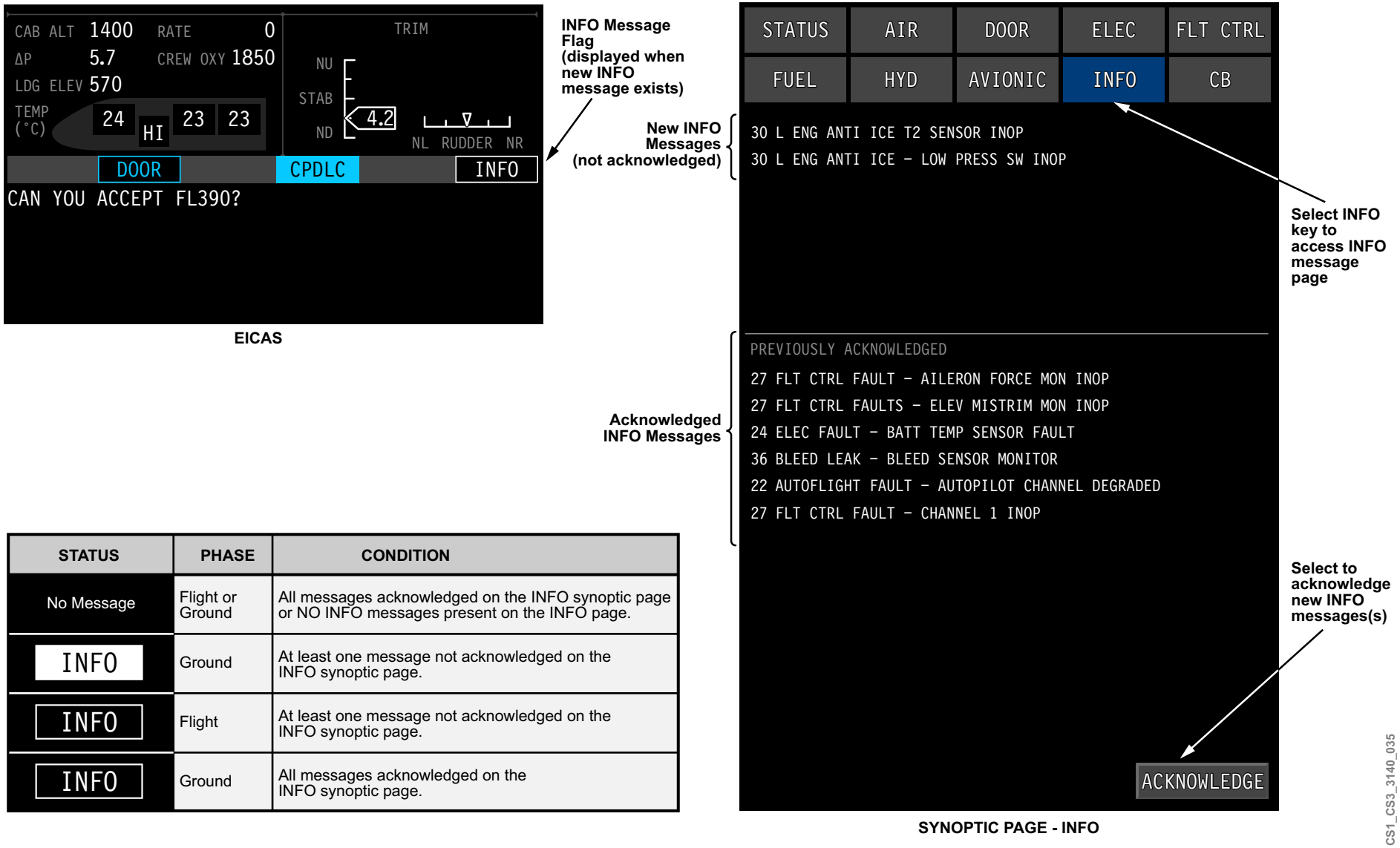

STATUS	PHASE	CONDITION
No Message	Flight or Ground	All messages acknowledged on the INFO synoptic page or NO INFO messages present on the INFO page.
INFO	Ground	At least one message not acknowledged on the INFO synoptic page.
INFO	Flight	At least one message not acknowledged on the INFO synoptic page.
INFO	Ground	All messages acknowledged on the INFO synoptic page.

Figure 67: EICAS INFO Messages

Copyright © Bombardier Inc.

ELECTRONIC CHECKLIST

The electronic checklist (ECL) function is responsible for controlling and computing the checklists associated with normal, abnormal, and emergency procedures.

The ECL is a function of EICAS, interfacing with the display system, to support the concept of a paperless flight deck. A field-loadable ECL database allows for updating as required.

The ECL may be manually selected on a MFW by selecting the:

- Checklist (CHKL) button of the onside multifunction keyboard panel (MKP) or control tuning panel (CTP)
- Checklist (CHKL) item of the MFW drop-down menu

The top ECL menu includes the following tab options:

- SUMMARY
- NORMAL
- NON-NORMAL
- PROC
- FCTN

While it is possible to select the checklist format on multiple MFWs, only an identical checklist is shown. It is not possible to display separate checklists on the flight deck.

Summary

The SUMMARY page is the first format that is displayed upon selection of CHKL.

The SUMMARY format is divided into normal, active, and history sections. The ECL part number is listed in the page footer at ECP page power-up. The normal section displays normal procedures for the current phase of flight. The active section displays checklists and non-normal procedures based on active CAS messages or pilot actions.

The history section displays completed checklists and non-normal procedures.

Copyright © Bombardier Inc.

MULTIFUNCTION KEYBOARD PANEL (2X)

CONTROL TUNING PANEL (2X)

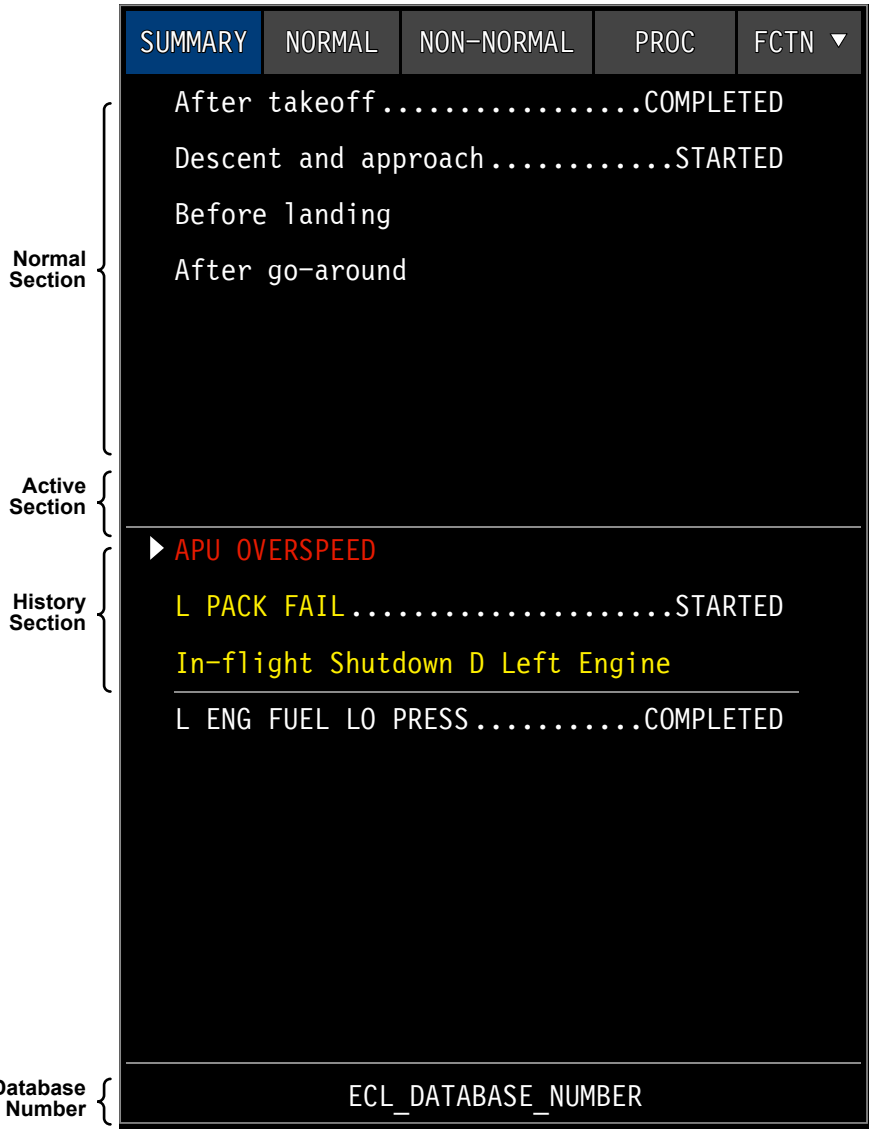

Figure 68: ECL Access and SUMMARY Page

Normal

The NORMAL page contains all normal and supplementary procedures. The status of each normal procedure status is indicated in the adjacent column.

The procedures are shown based on the current phase of flight with three phases of flight defined: preflight, inflight, and postflight. Phase transition is based on the aircraft's air/ground status.

Non-Normal

The NON-NORMAL page contains systems, subsystems, related checklists, and non-normal procedures.

Any listed items associated with a CAS message are shown in the related message color (red or amber).

Procedures Index

The PROC page provides a secondary means to access non-normal procedures.

The procedures are listed alphabetically, rather than by system, and divided into groups based on order of importance.

Function

The FCTN submenu allows the crew to reset a checklist or procedure, or to override an item, checklist, or procedure.

Copyright © Bombardier Inc.

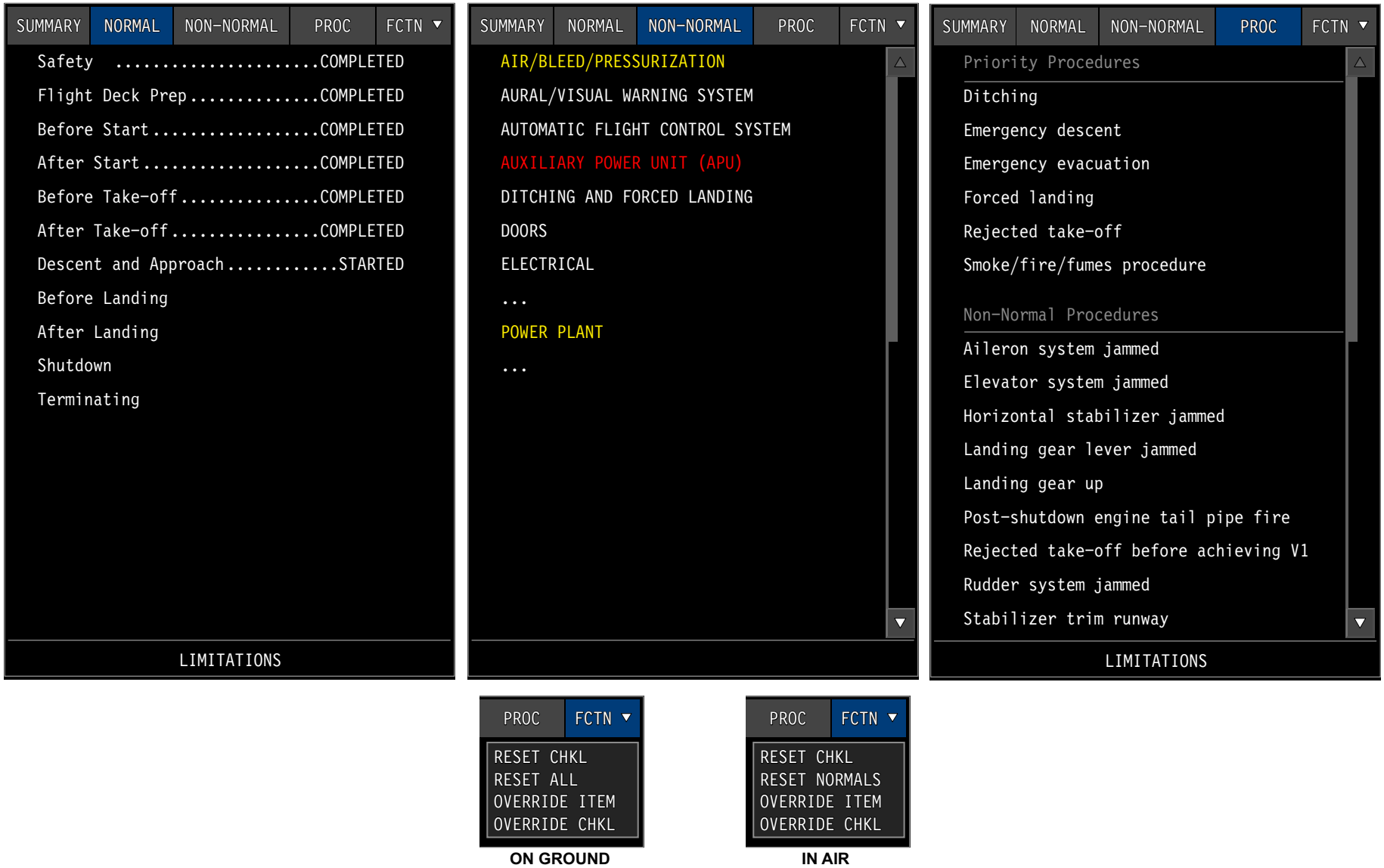

Figure 69: ECL Menu Page Displays

Checklist Display

The checklist display is shown upon selection of a checklist/procedure. The checklist includes individual items requiring acknowledgement.

Individual items are classified as:

- Action item - requires manual check by pilot
- Limitation item - identifying specific limitations
- Follow-on item - addition of a subsequent checklist or procedure
- Conditional item - requires a pilot YES/NO answer
- Multiselect item - requires pilot selection of multiple alternatives

Copyright © Bombardier Inc.

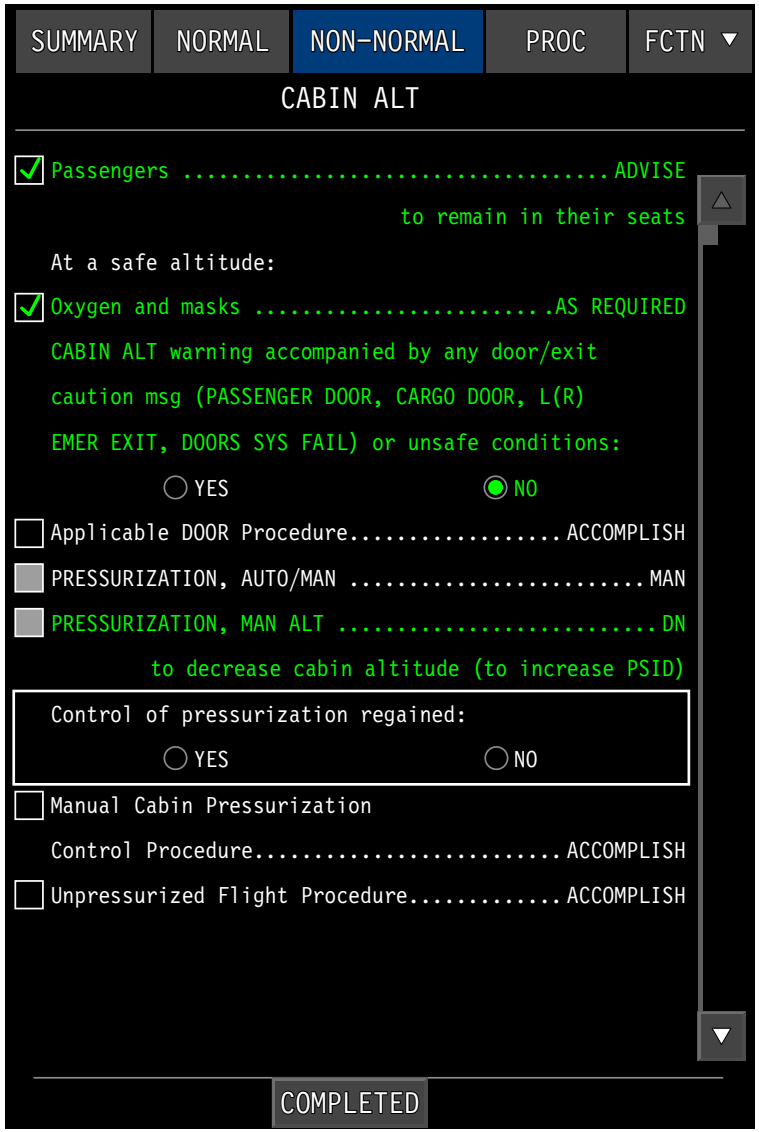

CS1_CS3_3140_040

Figure 70: Checklist Display

MONITORING AND TESTS

The following page provides the crew alerting system (CAS) messages for the engine indication and crew alerting system.

CAS MESSAGES

Table 8: ADVISORY Message

MESSAGE	LOGIC
CAS MISCOMPARE	Disagreement between DMC channels for CAS processing logic.

Table 9: STATUS Message

MESSAGE	LOGIC
AURAL WARN INHIB	The aural system has been disabled by the flight crew.

Copyright © Bombardier Inc.

31-30 FLIGHT DATA RECORDER

GENERAL DESCRIPTION

The flight data recorder (FDR) receives electrical power from the DC ESS BUS 1 via control distribution cabinet (CDC) 1. The CDC turns off power to the FDR in the event of a crash, based on the following logic:

- L/R engines oil pressure < 50 psi
- Airspeed < 45 kt
- Weight-off-wheels (WOFFW)

The flight crew is provided with a PILOT EVENT button on the ENGINE panel. Selecting the button provides a time stamp on the recorded data, identifying when a specific event occurred during flight.

The triaxial accelerometer is a transducer located at the center of gravity that provides lateral, longitudinal, and normal acceleration data specifically for the flight data recorder. The accelerometer is powered by DC ESS BUS 1.

The FDR does not record data when a flight is not in progress. A record inhibit command is sent to the FDR and removed under one of the following conditions:

- Beacon or strobe light switch is selected to ON
- One or both engines is/are operating
- Aircraft is in air

The underwater locator beacon (ULB) is attached to the FDR, installed on the front of the unit. The cylindrical ULB includes a self-contained battery, an electronic module, and a transducer. A water switch activates the beacon automatically once immersed. The ULB battery has a life of six years.

Once activated, the ULB operates for 90 days.

Copyright © Bombardier Inc.

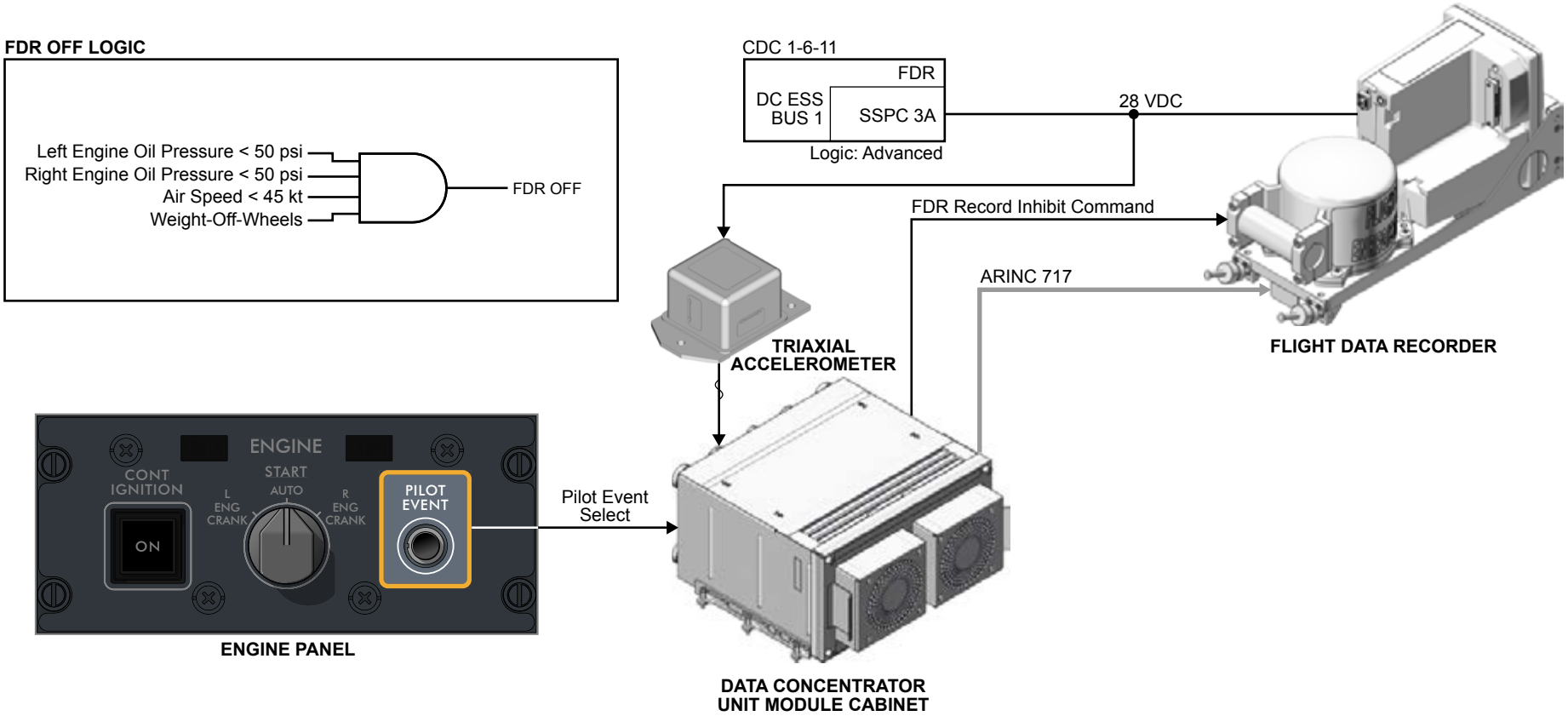

The FDR is inhibited from recording flight data unless one of the following conditions is met:

- BEACON or STROBE switch selected to ON
- At least one engine is running
- Aircraft is in the air

CS1_CS3_3131_010

Figure 71: Flight Data Recorder System

COMPONENT LOCATION

The flight data recorder system includes the following components:

- Flight data recorder (FDR)
- Underwater locator beacon (ULB)
- Triaxial accelerometer

Copyright © Bombardier Inc.

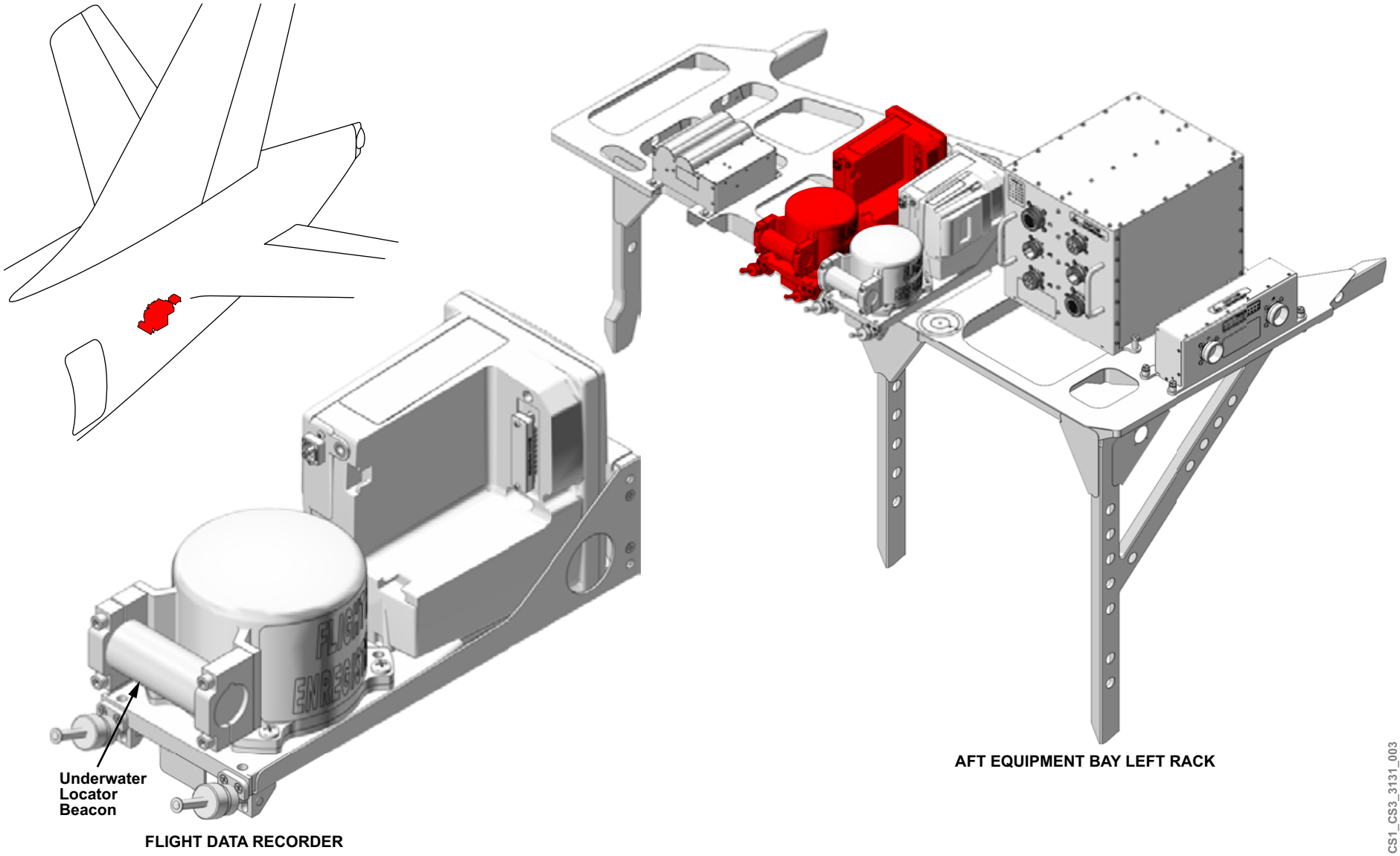

Figure 72: Flight Data Recorder Component Location

Copyright © Bombardier Inc.

TRIAXIAL ACCELEROMETER

The accelerometer is installed in the center mid fuselage above the center wing box. Access to the unit is through the passenger floor.

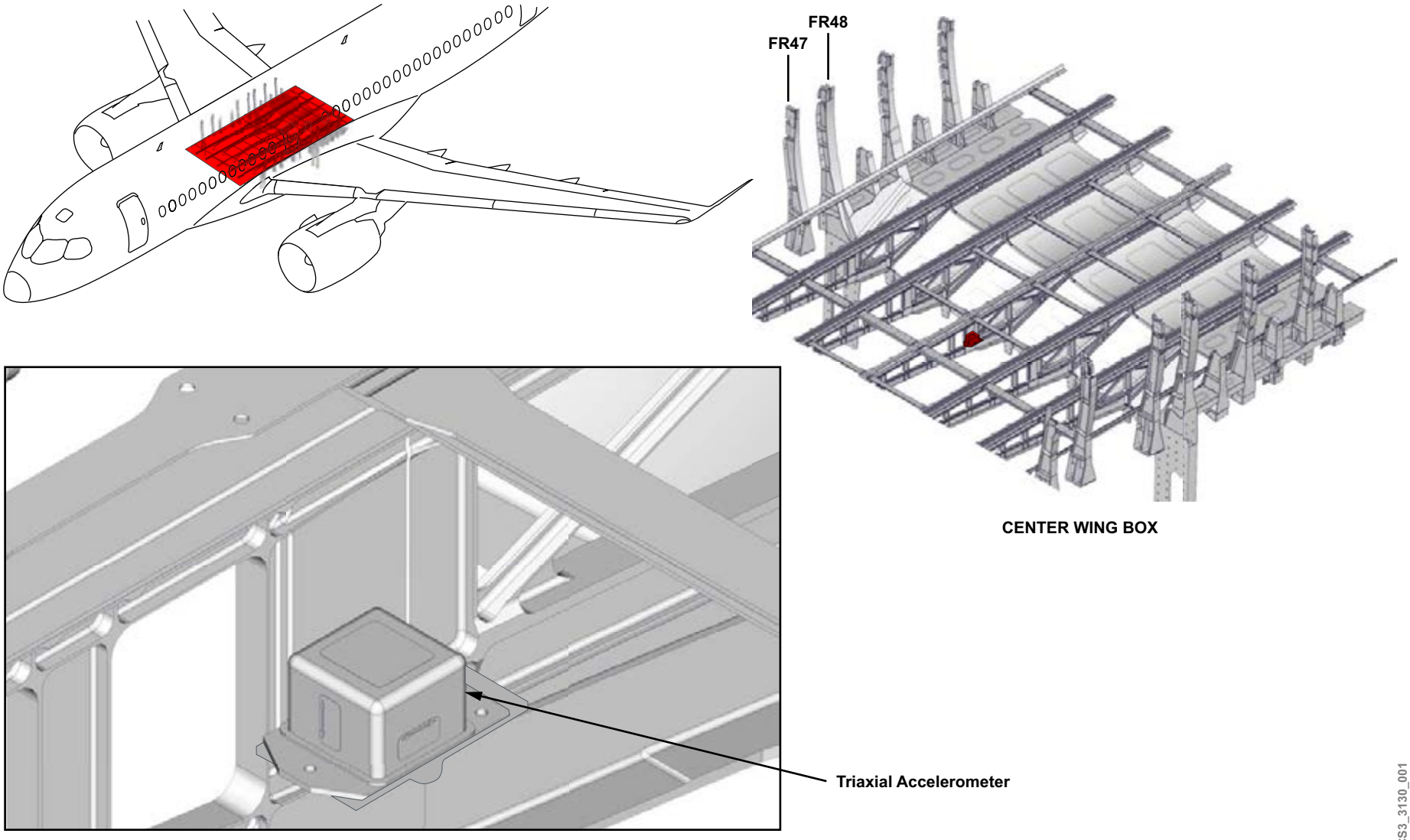

Figure 73: Flight Data Recorder Component Location

CONTROLS AND INDICATIONS

PILOT EVENT SWITCH

The PILOT EVENT switch is installed on the copilot switch panel. A switch selection for 2 seconds automatically stamps a time data marker on the FDR ARINC 717 data stream to aid in identifying a particular event for future analysis.

A CAS status message of PILOT EVENT is displayed upon switch selection.

Copyright © Bombardier Inc.

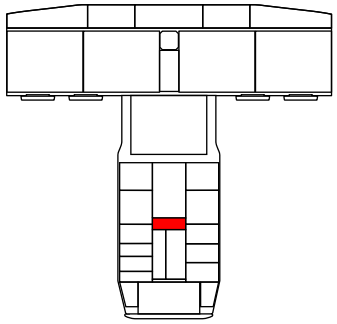

CS1_CS3_3131_008

Figure 74: PILOT EVENT Switch

DETAILED DESCRIPTION

The flight data recorder (FDR) is powered from the DC ESS BUS 1 via the control distribution cabinet (CDC) 1. The CDC contains the control logic to stop FDR operation in the event of a crash.

The acquisition of data for the FDR is carried out by channel A of data concentrator unit module cabinet (DMC) 1. The DMC provides an ARINC 717 data stream containing approximately 2000 flight and operational parameters. Most parameters are already used by the DMCs and simply routed to the FDR for recording, while other data is specifically created for the FDR.

The FDR assembly includes a recording unit providing signal conditioning, synchronization, and compression functions for the flight data received via the DMC. The data is provided to the crash-survivable memory unit (CSMU).

The CSMU uses 5 GB of non-volatile memory to provide 25 hours of flight data storage. Older data is automatically overwritten, ensuring that only the most recent is retained.

To prevent the overwriting of flight data following landing, the FDR stops recording once the aircraft has landed, engines have been shutdown, and the beacon/strobe light switch turned off.

Stored data may be viewed using a computer or a dedicated interface device.

An ARINC 429 data word is provided from the FDR to DMC 1 indicating the FDR status. An FDR internal fault, as well as loss of DMC data, will result in an FDR failure indication. An FDR failure is indicated by FDR FAIL advisory message.

The accelerometer is tested every time the park brake is set to ON. If the FDR is powered, a CAS equation verifies that the normal acceleration is around 1 G while the lateral and longitudinal are around 0 G. The tolerance for each axis is +/- 0.2G. If one axis is outside that range, the FDR ACCEL FAIL CAS message is displayed. If it was caused by a temporary movement such as cargo loading, or maintenance in the area, the FDR ACCEL FAIL CAS message can be reset by pressing the PILOT EVENT pushbutton for 2 seconds. If it does not reset, the accelerometer must be replaced.

Copyright © Bombardier Inc.

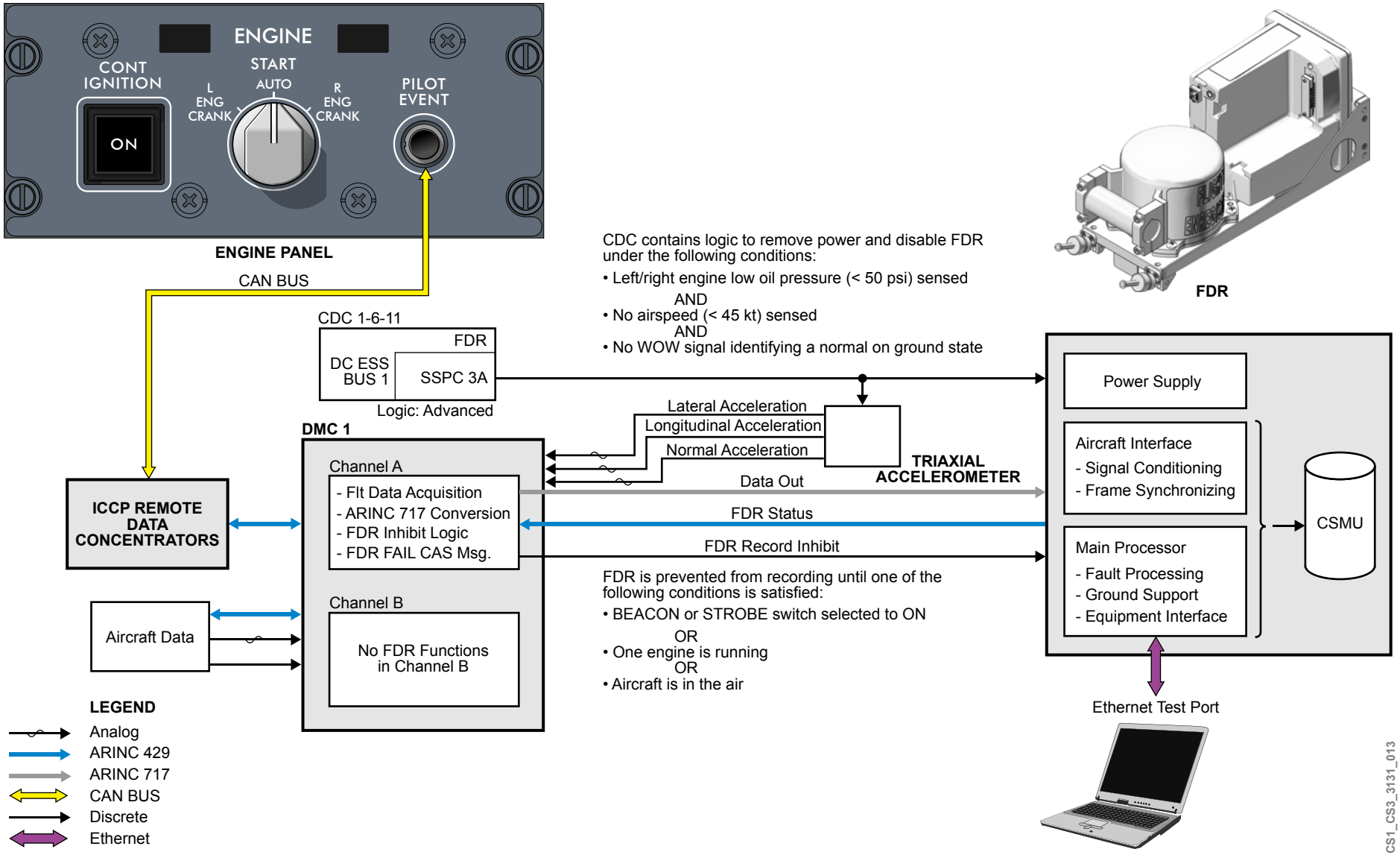

Figure 75: FDR Interface

MONITORING AND TESTS

The following page provides the crew alerting system (CAS) messages for the flight data recorder.

CAS MESSAGES

Table 10: ADVISORY Message

MESSAGE	LOGIC
FDR FAIL	FDR failure.
FDR ACCEL FAIL	Accelerometer declared failed if signal is not reading a reasonable acceleration.

Table 11: STATUS Message

MESSAGE	LOGIC
PILOT EVENT	Momentary status for confirmation of pilot event selection.

Copyright © Bombardier Inc.

Page Intentionally Left Blank

ATA 45 - Central Maintenance System

BD-500-1A10
BD-500-1A11

Table of Contents

45-45 Onboard Maintenance System 45-2
General Description 45-2
Component Location 45-4
Integrated Processing Cabinet 1.....45-4
RJ45 Jacks 45-6
Detailed Description 45-8
Onboard Maintenance System Interface 45-8
Onboard Maintenance System Applications 45-10
Monitoring and Tests 45-14
CAS Messages 45-15
Operation 45-16
Aircraft Dispatch.....45-16
Accessing the Onboard Maintenance System 45-18
OMS Maintenance Main Menu Structure.....45-20
Maintenance Main Menu.....45-22
Fault Message Scenario 45-24
Service Message Scenario 45-40
Advisory Message Scenario 45-44
Data Bus Reader Scenario 45-50
Page Selection Options 45-54

Copyright © Bombardier Inc.

List of Figures

Figure 1: Onboard Maintenance System Schematic 45-3
Figure 2: Integrated Processing Cabinet 1 45-5
Figure 3: RJ45 Jack Locations 45-7
Figure 4: Onboard Maintenance System Interface 45-9
Figure 5: Onboard Maintenance System Applications 45-11
Figure 6: Onboard Maintenance System Remote Access Applications 45-13
Figure 7: Aircraft Dispatch 45-17
Figure 8: Accessing the Onboard Maintenance System 45-19
Figure 9: OMS Maintenance Main Menu Structure 45-21
Figure 10: Using the Maintenance Main Menu 45-23
Figure 11: Fault Message Scenario 45-25
Figure 12: Further Troubleshooting 45-27
Figure 13: Flight Deck Effect Relationship 45-29
Figure 14: Viewing Data 45-31
Figure 15: Selecting the TEST Tab 45-33
Figure 16: Running the Test 45-35
Figure 17: Test Results 45-37
Figure 18: CLOSE OUT Page 45-39
Figure 19: Service Message Handling 45-41
Figure 20: Service Message Tasks 45-43
Figure 21: Advisory and INFO Messages 45-45
Figure 22: AVIONICS FAULT – Flight Deck Effects 45-47
Figure 23: Minimum Equipment List – Dispatch 45-49
Figure 24: Data Bus Reader Scenario 45-51
Figure 25: APU ECU - Data Reader Page 45-53
Figure 26: Post Flight Summary – FDE Tab 45-55
Figure 27: Post Flight Summary – FDE 45-57
Figure 28: Post Flight Summary Details Page – FAULT 45-59
Figure 29: Post Flight Summary Details – SERVICE 45-61
Figure 30: Post Flight Summary Details – SRVCING 45-63
Figure 31: Flight Deck Effects Page 45-65
Figure 32: Flight Deck Effect Summary Page 45-67
Figure 33: Fault Messages Page 45-69
Figure 34: Service Messages Page 45-71
Figure 35: LRU/System Operations Page 45-73
Figure 36: LRU/System Operations Tabs 45-75
Figure 37: System Configuration – IMA Software Part Numbers and Part Number Crosscheck Details 45-77
Figure 38: System Configuration – Electronic TSO Nameplate Details 45-79
Figure 39: System Configuration – APM Configuration Option Partition 45-81
Figure 40: System Configuration Page 45-83
Figure 41: Maintenance Reports Page 45-85
Figure 42: Maintenance Reports Page Report Type and Write To Options 45-87
Figure 43: Utility Functions Password and Utility Functions Menu Pages 45-89
Figure 44: Change Aircraft Tail Number 45-91

Copyright © Bombardier Inc.

Figure 45: Change Automatically Initiated Reports Page 45-93
Figure 46: Change Aircraft SELCAL Code Page.....45-95
Figure 47: Change Maintenance Flight Leg Page 45-97
Figure 48: Change Report Configuration Page 45-99
Figure 49: Delete Stored Maintenance Data and Delete Maintenance Files Pages.....45-101
Figure 50: View Loaded Maintenance Files Page 45-103

Copyright © Bombardier Inc.

CENTRAL MAINTENANCE SYSTEM - CHAPTER BREAKDOWN

Maintenance Philosophy 1

Onboard Maintenance System 2

45-45 ONBOARD MAINTENANCE SYSTEM

GENERAL DESCRIPTION

The onboard maintenance system (OMS) consists of a group of software applications hosted on common computing module (CCM) 2 of integrated processing cabinet (IPC) 1. The OMS begins to initialize as soon as the left IPC is powered by DC ESS BUS 3.

In normal operation, the OMS is accessed on the ground with weight-on-wheels (WOW) for all of the functions to be enabled. Selecting the AIRCRAFT switch on the HMU maintenance panel to MAINT enables display of the OMS on any multifunction window (MFW) in display unit (DU) 2, 3, or 5. The maintenance data can also be accessed through a laptop. The OMS supports up to four remote laptops in parallel through the aircraft network switch.

The test and rigging, non-volatile memory (NVM) download, data load, and utility functions are not available in flight. The data reader and fault message functions can be accessed on the ground or in flight.

Software updates for the OMS are made through the information management system (IMS) (ATA 46). The IMS sends OMS data to a printer (if installed) or data can also be saved on a universal serial bus (USB) stick.

The OMS reports are available for transmission by the aircraft communications and reporting system (ACARS). Data link is provided by the radio interface unit (RIU).

Copyright © Bombardier Inc.

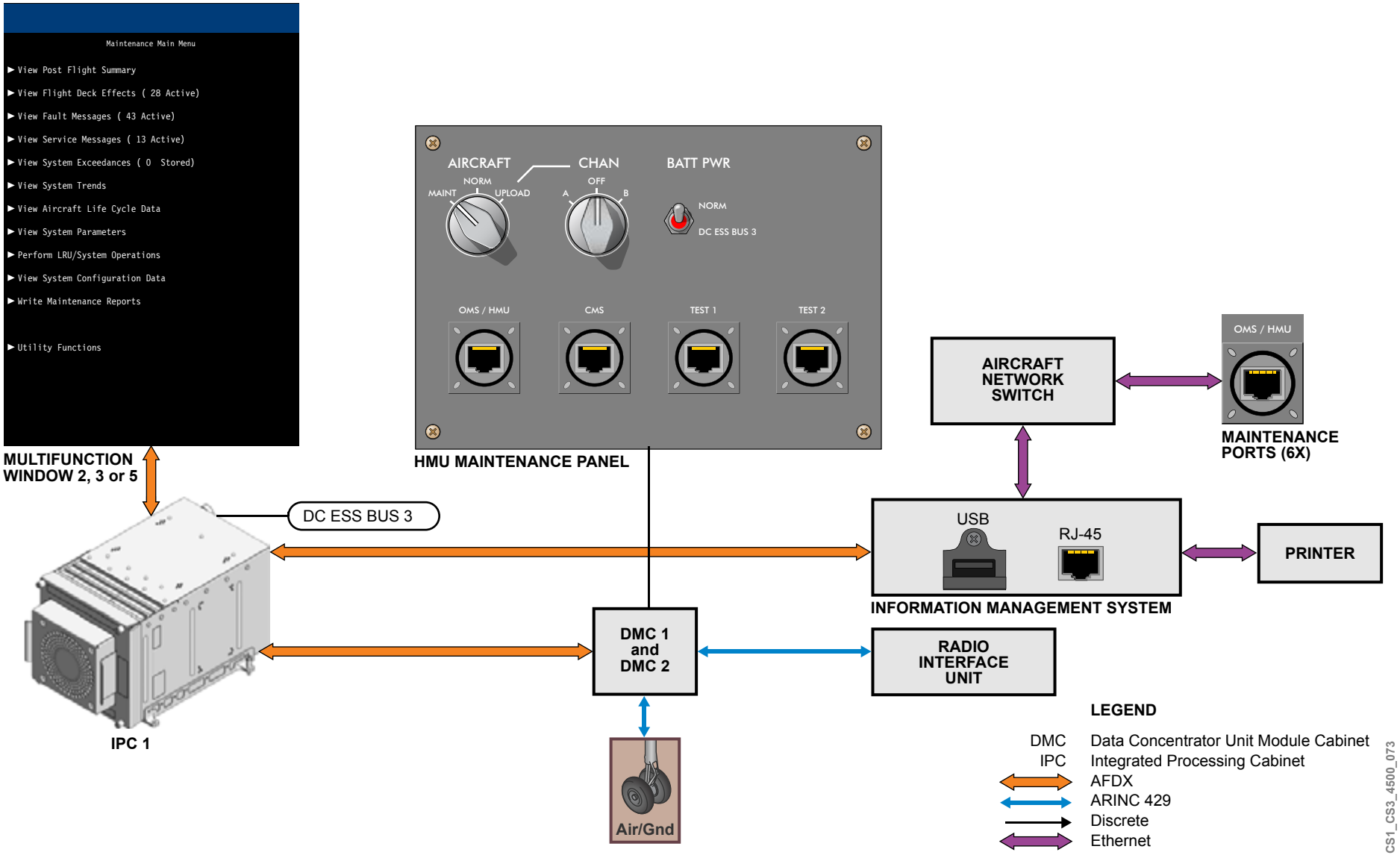

Figure 1: Onboard Maintenance System Schematic

COMPONENT LOCATION

The following components are part of the onboard maintenance system (OMS):

- Integrated processing cabinet (IPC) 1
- RJ45 jacks

INTEGRATED PROCESSING CABINET 1

IPC 1 is located in the forward equipment bay. The OMS software is installed on common computing module 2 (CCM 2).

Copyright © Bombardier Inc.

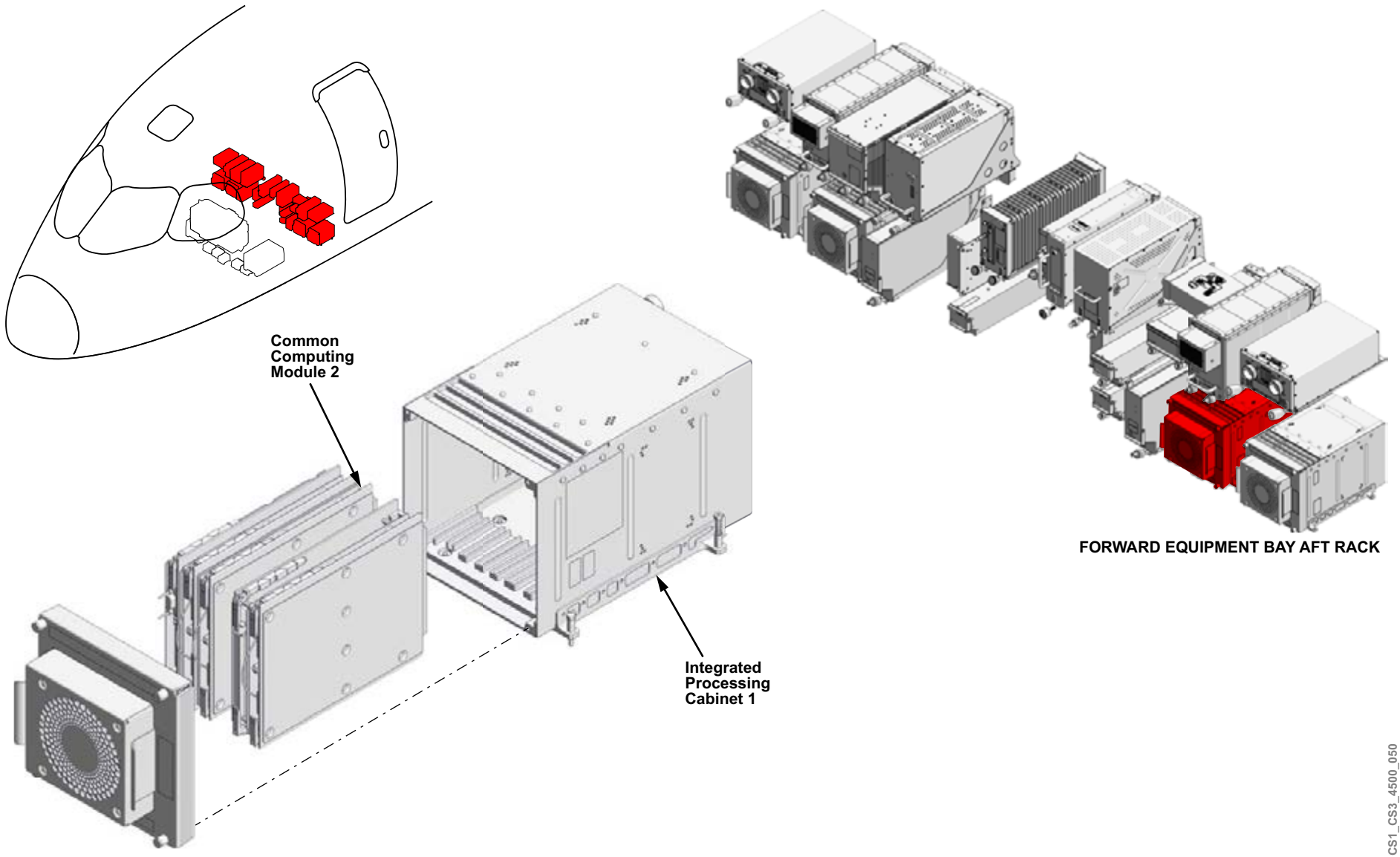

Figure 2: Integrated Processing Cabinet 1

Copyright © Bombardier Inc.

RJ45 JACKS

RJ45 jacks are installed at the following locations on the aircraft:

- Electrical /towing service panel
- HMU maintenance panel
- Refuel interphone panel
- Forward equipment bay
- Mid equipment bay
- Aft equipment bay

Copyright © Bombardier Inc.

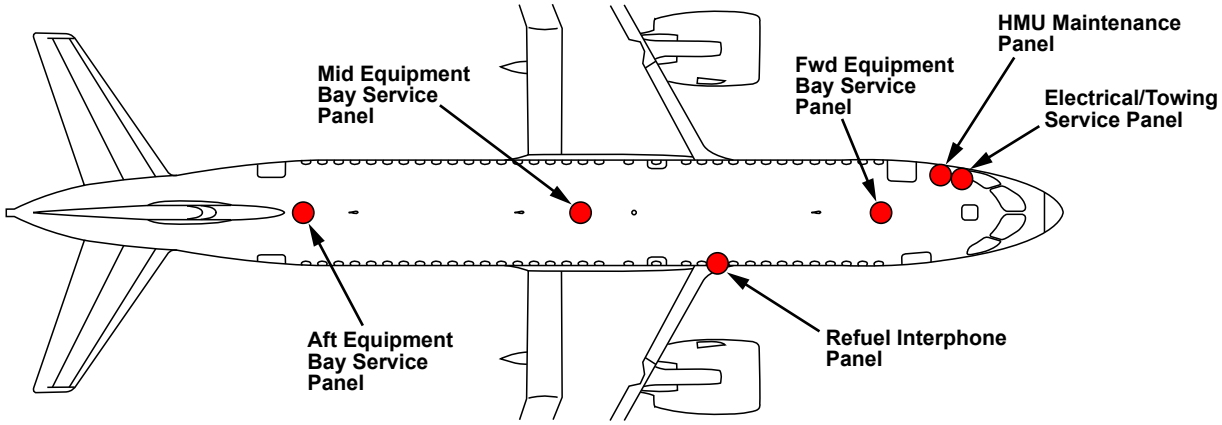

RJ45 CONNECTOR LOCATIONS

REFUEL INTERPHONE PANEL

ELECTRICAL/TOWING SERVICE PANEL

HMU MAINTENANCE PANEL

RJ45 CONNECTORS FOR EQUIPMENT BAY SERVICE PANELS

CS1_CS3_4500_051

Figure 3: RJ45 Jack Locations

Copyright © Bombardier Inc.

DETAILED DESCRIPTION

ONBOARD MAINTENANCE SYSTEM INTERFACE

The onboard maintenance system (OMS) interfaces with, and collects maintenance data from line replaceable units (LRUs) and line replaceable modules (LRMs) that provide an output with health, failure, or configuration information data.

The OMS interfaces with the data concentrator unit module cabinets (DMCs) to receive system status, faults, and diagnostic data. The DMCs receive ARINC 429, discrete, or analog signals from the LRUs, and convert them in the avionics full duplex switched Ethernet (AFDX) format. Converted data is sent to the digital switching modules (DSMs) located in both IPCs. The data is forwarded by the DSMs to the OMS application and then processed to be viewed on the display units (DUs).

The OMS report downloads and software uploads are provided via the information management system (IMS) or a remote connection using the RJ45 connectors.

Copyright © Bombardier Inc.

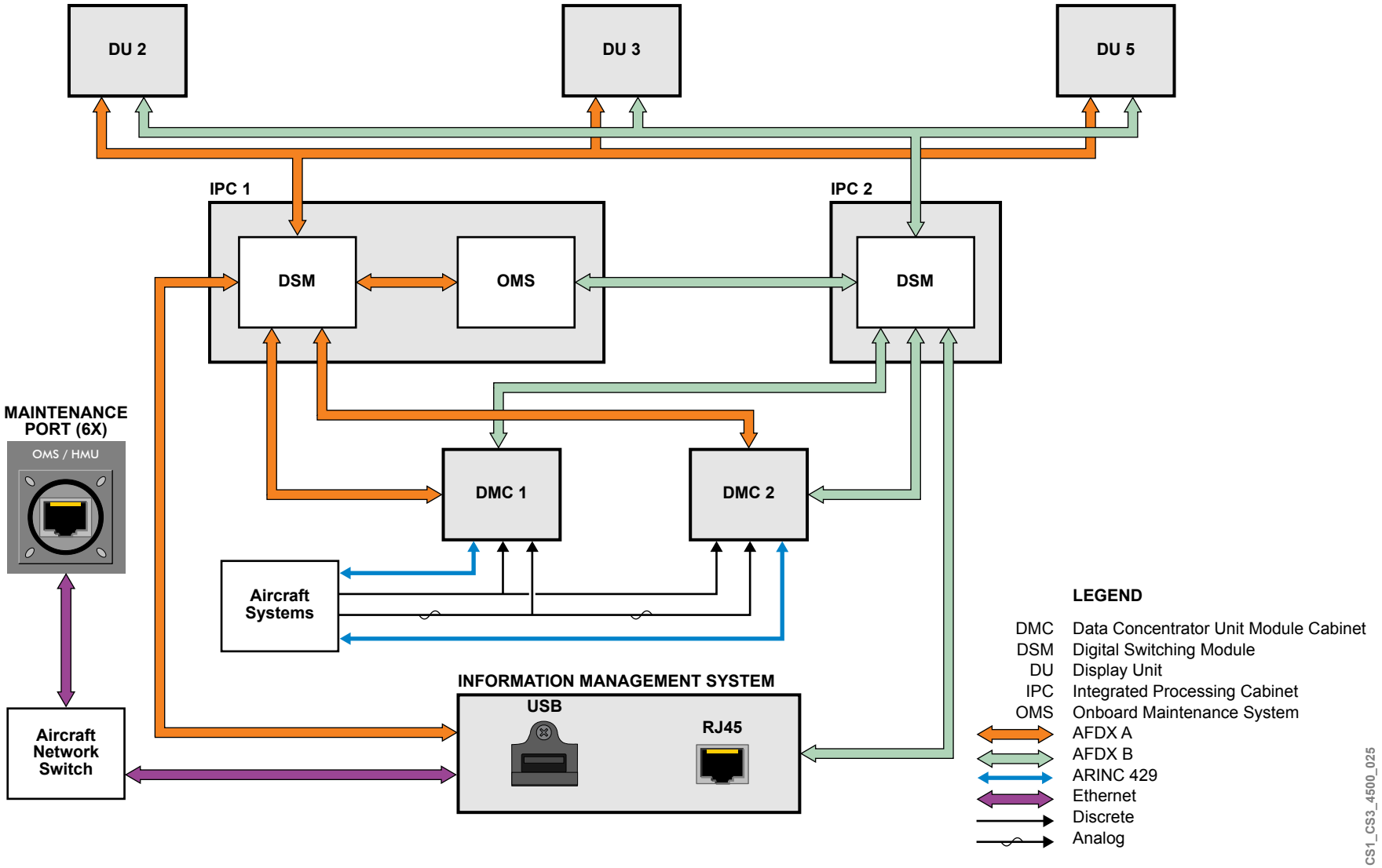

Figure 4: Onboard Maintenance System Interface

Copyright © Bombardier Inc.

ONBOARD MAINTENANCE SYSTEM APPLICATIONS

The onboard maintenance system applications (OMSAs) assists in detecting and troubleshooting aircraft problems by collecting data from specific components of the avionics and aircraft systems. A component is typically a line replaceable unit (LRU) or a line replaceable module (LRM) that provides a digital output with health, failure, or configuration information data to the OMS.

Fault or status information gathered from these components is selectable for display in a multifunction window (MFW).

Along with the ability to provide avionics maintenance diagnostics, the OMSA can also perform interactive tests and rigging procedures.

Other OMSA functions include storing and displaying of engine maintenance information, real-time aircraft system parameter information, and database effectivity.

The OMSA also provides the ability to download stored data files to an external data load device (USB).

This functionality is accomplished by using many individual applications:

- Aircraft condition monitoring (ACM) application
- Database manager (DBM) application
- Diagnostic and reporting application (DRA)
- Display manager application (DMA)
- OMS interactive maintenance application (OMS IMA)
- Remote maintenance access (RMA) application
- Report server application (RSA)
- Web server application (WSA)

Aircraft Condition Monitoring Application

The aircraft condition monitoring (ACM) application monitors parameters from various aircraft LRUs and evaluates predefined trigger conditions in order to capture trend and exceedance data, life cycle counters, and user-defined event data. The ACM also generates reports of stored information for download.

Database Manager Application

The database manager (DBM) application provides a central location to manage and display information on the installed periodic databases in an avionics system. The DBM receives database status information from subsystems, including the flight management system (FMS) and integrated flight information system (IFIS).

Diagnostic and Reporting Application

The diagnostic and reporting application (DRA) takes input from aircraft LRUs and uses the data in logic-based equations to generate avionics faults, if present. The DRA also monitors real-time avionics parameters and generates reports of the stored information for download.

Display Manager Application

The display manager application (DMA) coordinates the exchange of information between applications and the flight deck displays.

OMS Interactive Maintenance Application

The OMS interactive maintenance application (IMA) interfaces between the OMS and the LRUs to provide interactive, or automatic maintenance information and menus.

The OMSA provides the fault logic equations used for trend monitoring and life cycle data, test and rigging files, and configuration data.

Copyright © Bombardier Inc.

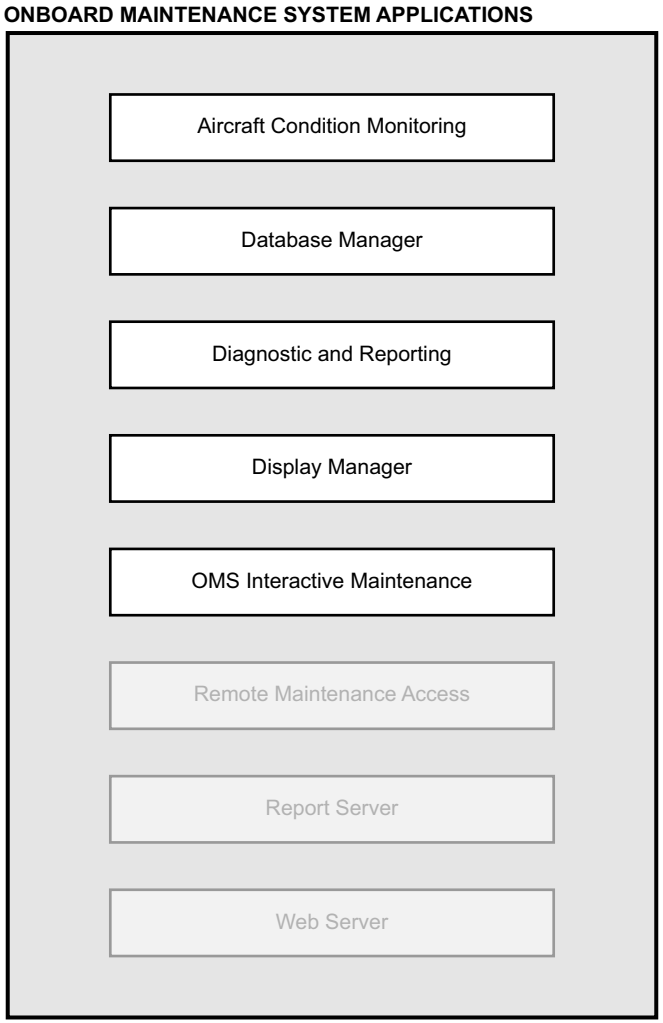

CS1_CS3_4500_077

Figure 5: Onboard Maintenance System Applications

Copyright © Bombardier Inc.

Remote Maintenance Access Application

The remote maintenance access (RMA) application provides an external interface to the OMS to view maintenance and diagnostic information remotely, using a standard laptop. It allows maintenance personnel to access maintenance functionality similar to what is displayed on the multifunction window (MFW).

The RMA flash application is stored on the CCM and can be downloaded by any laptop with a web browser and a flash player software installed.

Report Server Application

The report server application (RSA) is responsible of relaying reports and other downlink requests for transmission to a ground station.

The RSA is also capable of receiving requests from the ground station and relaying those requests to the other maintenance applications.

Web Server Application

The web server application (WSA) is responsible for the interface between the maintenance applications and remotely connected computers.

The WSA allows reports to be downloaded to external computers, and allows the remote maintenance application to communicate with the ACM application.

Copyright © Bombardier Inc.

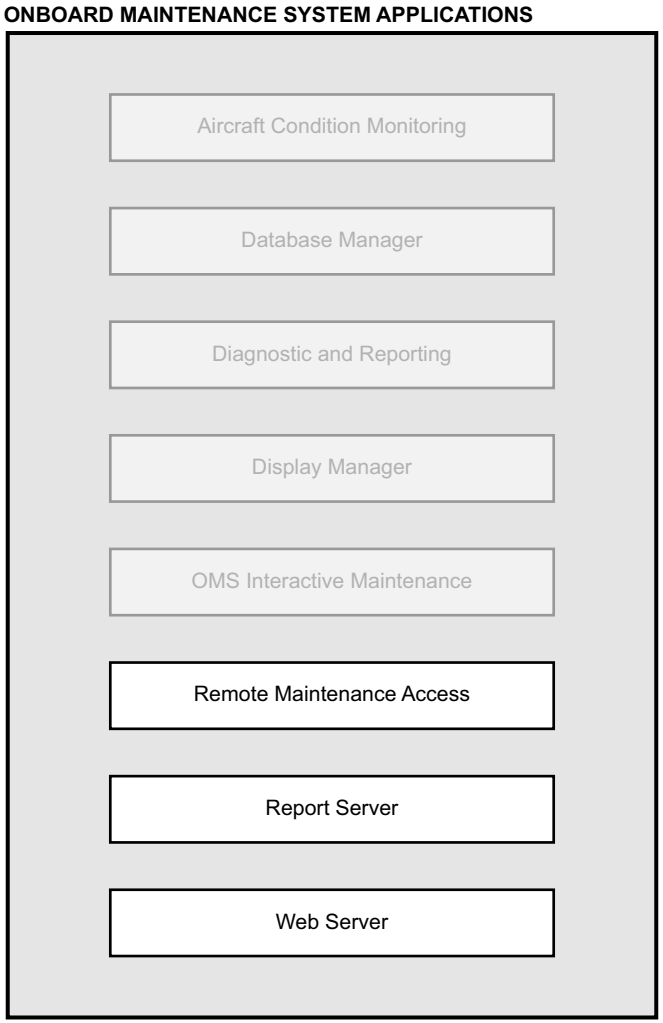

CS1_CS3_4500_078

Figure 6: Onboard Maintenance System Remote Access Applications

Copyright © Bombardier Inc.

MONITORING AND TESTS

The following page provides the crew alerting system (CAS) and INFO messages for the onboard maintenance system.

CAS MESSAGES

Table 1: ADVISORY Message

MESSAGE	LOGIC
AVIONIC FAULT	Loss of redundant or noncritical function for the avionic system (refer to INFO messages).

Table 2: STATUS Message

MESSAGE	LOGIC
A/C MAINTENANCE SW	AIRCRAFT switch in UPLOAD or MAINT position.

Table 3: INFO Messages

MESSAGE	LOGIC
31 AVIONIC FAULT - OMS INOP	Diagnostic and reporting application (DRA) and aircraft condition monitoring (ACM) are both invalid. EICAS cross-talk is valid and the IPC has not failed and has power.

Copyright © Bombardier Inc.

OPERATION

AIRCRAFT DISPATCH

CAS and INFO messages identify which failure condition is present so that no troubleshooting is required for dispatch purposes.

CAS messages (warning, caution, and advisory) are there to provide crew awareness and are not necessarily useful in determining the exact cause of the problem.

The purpose of INFO messages, types of CAS non-alerting messages, is to provide complementary information to CAS alerting messages (mainly caution and advisory) on the cause of a failure, especially when there are multiple causes with different dispatch conditions. The INFO messages relate to specific minimum equipment list items. This reduces the time required to make a decision to dispatch an aircraft with a faulty condition. Information on CAS and INFO messages can be found in Section 2 of the minimum equipment list (MEL).

The OMS is not required to dispatch the aircraft. The OMS functions as a troubleshooting aid by providing information about faults and links to Aircraft Maintenance Publication (AMP) documents. The OMS provides access to troubleshooting information, real-time data, and test functions. The OMS is not involved in returning the aircraft to service, unless a component is replaced that requires an initiated built-in test (IBIT) to be run as per the Aircraft Maintenance Publication (AMP).

Copyright © Bombardier Inc.

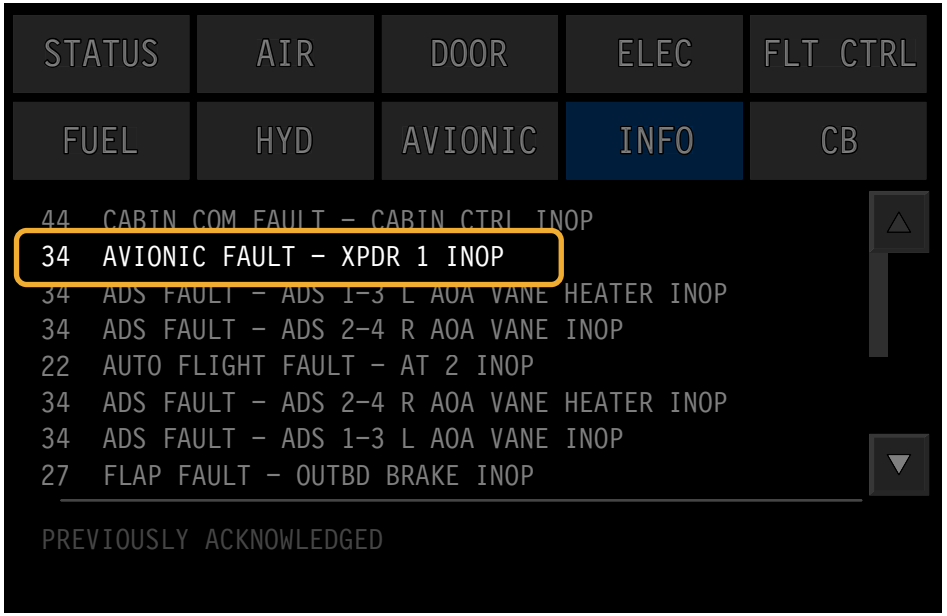

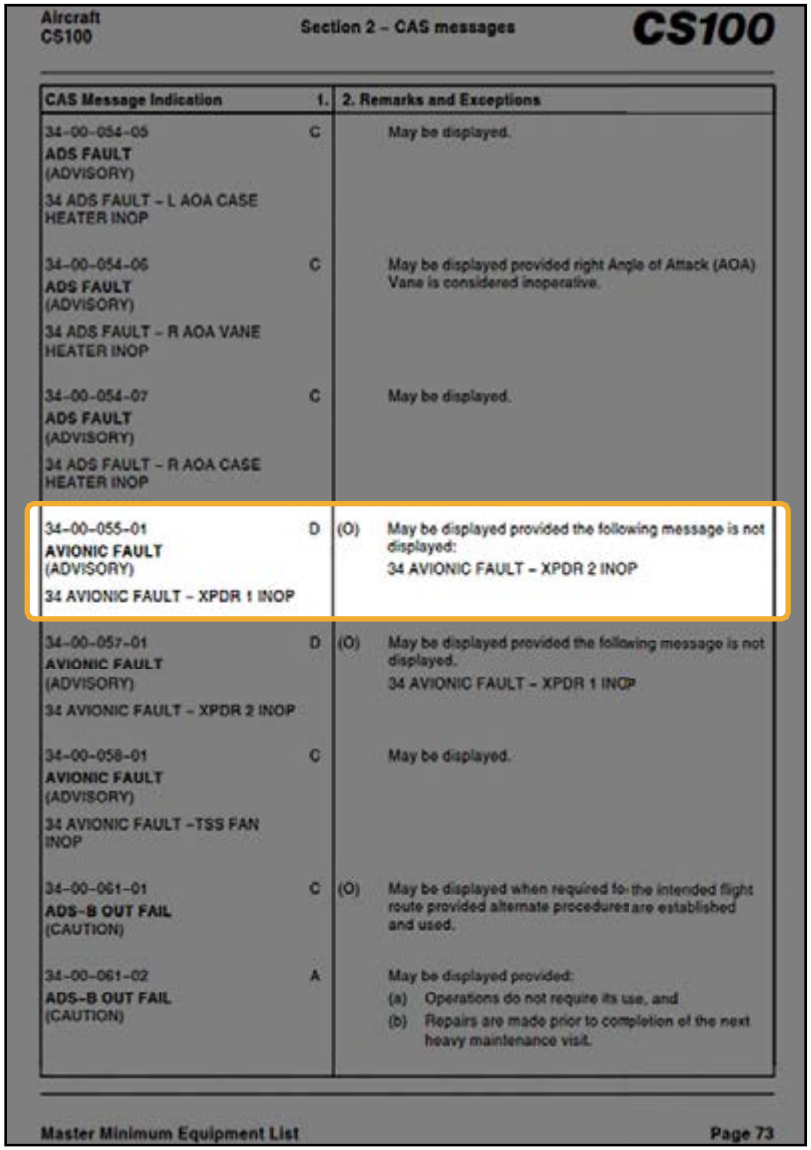

Aircraft CS100 — Section 2 – CAS messages — CS100

CAS Message Indication	1.	2. Remarks and Exceptions
34-00-054-05 ADS FAULT (ADVISORY) 34 ADS FAULT – L AOA CASE HEATER INOP	C	May be displayed.
34-00-054-06 ADS FAULT (ADVISORY) 34 ADS FAULT – R AOA VANE HEATER INOP	C	May be displayed provided right Angle of Attack (AOA) Vane is considered inoperative.
34-00-054-07 ADS FAULT (ADVISORY) 34 ADS FAULT – R AOA CASE HEATER INOP	C	May be displayed.
34-00-055-01 AVIONIC FAULT (ADVISORY) 34 AVIONIC FAULT – XPDR 1 INOP	D	(O) May be displayed provided the following message is not displayed: 34 AVIONIC FAULT – XPDR 2 INOP
34-00-057-01 AVIONIC FAULT (ADVISORY) 34 AVIONIC FAULT – XPDR 2 INOP	D	(O) May be displayed provided the following message is not displayed. 34 AVIONIC FAULT – XPDR 1 INOP
34-00-058-01 AVIONIC FAULT (ADVISORY) 34 AVIONIC FAULT –TSS FAN INOP	C	May be displayed.
34-00-061-01 ADS-B OUT FAIL (CAUTION)	C	(O) May be displayed when required fo- the intended flight route provided alternate procedures are established and used.
34-00-061-02 ADS-B OUT FAIL (CAUTION)	A	May be displayed provided: (a) Operations do not require its use, and (b) Repairs are made prior to completion of the next heavy maintenance visit.

Master Minimum Equipment List — Page 73

CS1_CS3_4500_059

Figure 7: Aircraft Dispatch

ACCESSING THE ONBOARD MAINTENANCE SYSTEM

The OMS can be displayed on any multifunction window (MFW) on display units 2, 3, and 5. Accessing the OMS requires the use of the cursor control panel (CCP). Refer to ATA 31, Indicating/Recording, for additional information.

The aircraft must be on the ground in a weight-on-wheels (WOW) condition.

The OMS can be accessed as follows:

- On the HMU maintenance panel, set the AIRCRAFT rotary switch to MAINT
- To display the menu bar, move the cursor into the desired MFW then momentarily press the MENU pushbutton on the CCP to get the top level menu bar
- Select DATA from the menu bar to get the second level menu
- Select MAINTENANCE to access the maintenance main menu

Copyright © Bombardier Inc.

HMU MAINTENANCE PANEL

CURSOR CONTROL PANEL

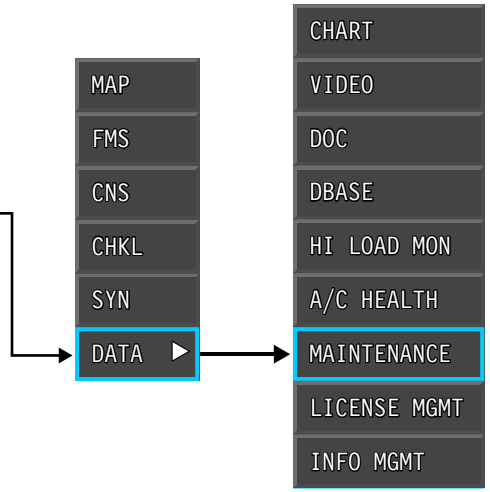

CS1_CS3_4500_052

Figure 8: Accessing the Onboard Maintenance System

OMS MAINTENANCE MAIN MENU STRUCTURE

The Maintenance Main Menu of the OMS provides the following groups of functions:

- Diagnostics for fault detection and isolation, and includes a variety of menus as follows:
  - Post flight summary
  - Flight deck effects
  - Fault messages
  - Service messages
  - System parameters
  - Perform LRU/system operations
- Aircraft Condition Monitoring which includes a variety of menus as follows:
  - System exceedances
  - System trends
  - Aircraft life cycle data
- Configuration and Reporting which includes the following menus:
  - System configuration data
  - Maintenance reports
- Utility Functions
  - Utility functions provide the ability to modify the maintenance data stored within the OMS. The page is protected by a password to prevent unintentional modification of stored data

Some of the menus have submenus that provide additional information or capabilities.

Copyright © Bombardier Inc.

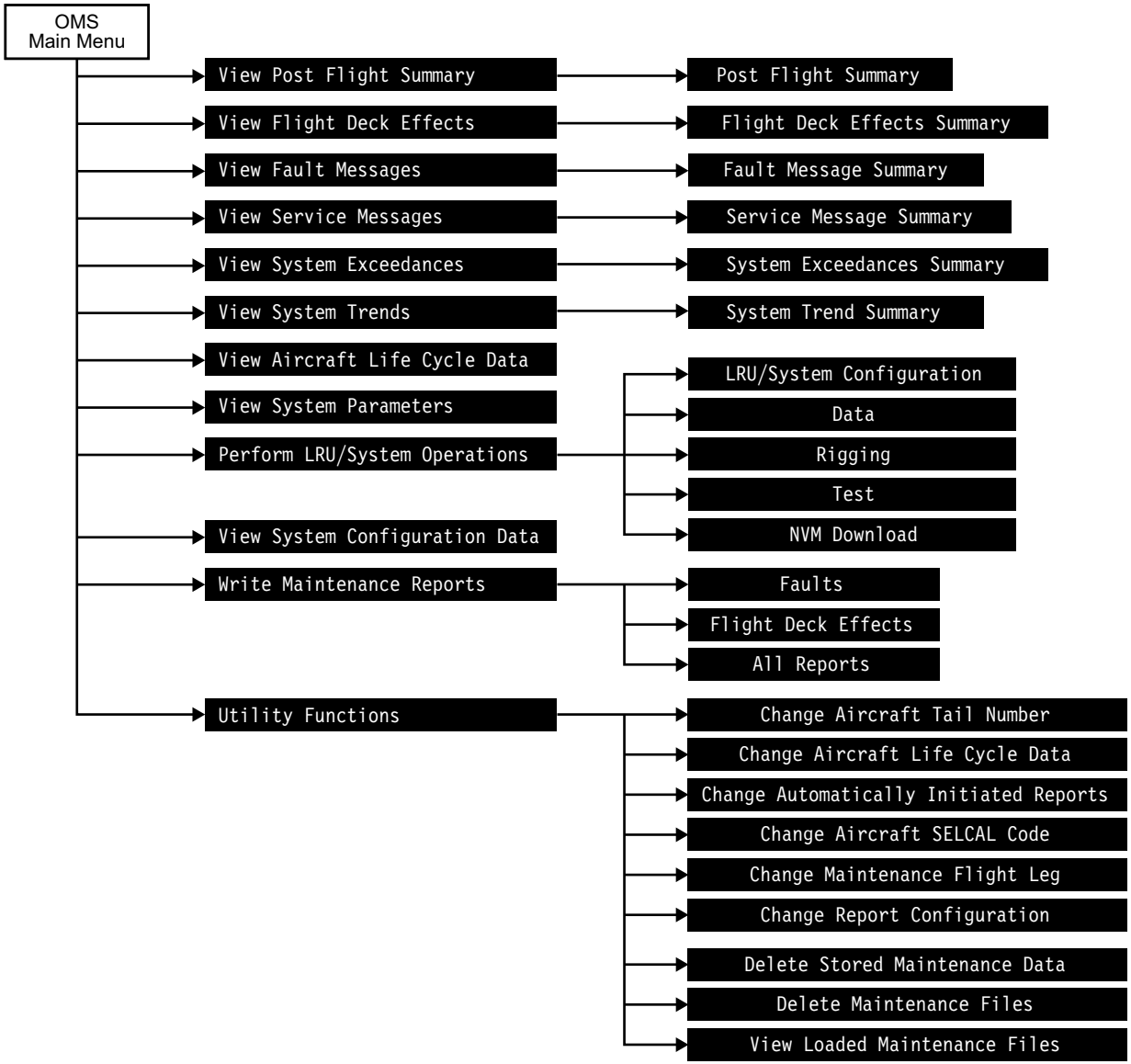

Figure 9: OMS Maintenance Main Menu Structure

MAINTENANCE MAIN MENU

The Maintenance Main Menu is the primary point of entry to the OMS.

From the Maintenance Main Menu, the following items are available for selection:

- View Post Flight Summary
- View Flight Deck Effects (XXX Active)
- View Fault Messages (XXX Active)
- View Service Messages (XXX Active)
- View System Exceedances (YYY Stored)
- View System Trends
- View Aircraft Life Cycle Data
- View System Parameters
- Perform LRU/System Operations
- View System Configuration Data
- Write Maintenance Reports
- Utility Functions

For some menu items, the XXX and YYY in the selection field refer to the number of messages or exceedances stored for that selection.

Menu items are selected using the cursor control panel (CCP).

After a selection has been made, the Maintenance Main Menu can be accessed by selecting MAINT MENU at the top of each menu item page. A drop-down menu appears allowing a new selection to be made.

NOTE

The following functions are inactive on the C Series aircraft:

- View System Exceedences
- View System Trends
- View Aircraft Life Cycle Data
- View System Parameters

Copyright © Bombardier Inc.

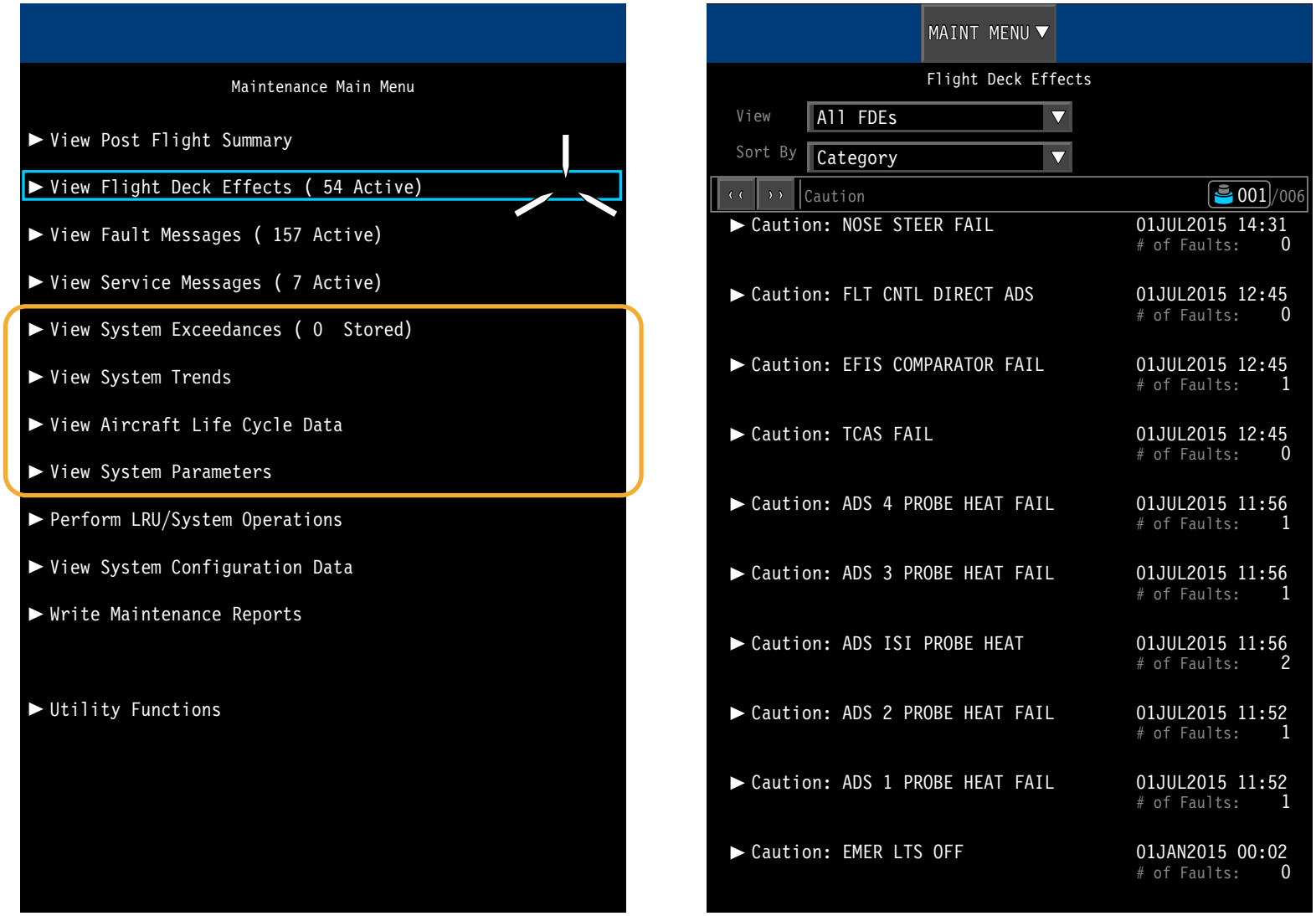

CS1_CS3_4500_032

Figure 10: Using the Maintenance Main Menu

FAULT MESSAGE SCENARIO

MID AVIONIC VENTS TEMPERATURE SENSOR (MT682) OUT OF RANGE

Fault messages should be reviewed at every arrival. During a review of the fault messages, the MID AVIONIC VENTS TEMPERATURE SENSOR (MT682) OUT OF RANGE message is selected.

On the Fault Message Summary page, a list of possible causes is displayed. The list of possible causes shows that the most probable cause is the sensor, followed by the wiring, and then the integrated air system controllers (IASCs).

NOTE

To return to the top level page of the currently selected menu item, select the RETURN TO "___" soft key at the top of the page.

HELP Tab

The HELP tab provides the reason for the fault to appear and gives the fault code and fault isolation manual (FIM) reference.

It also advises to confirm that the fault still exists. There are further suggestions to do a visual inspection of the sensor and its electrical connection as per the Aircraft Maintenance Publication (AMP) 21-61-17.

Copyright © Bombardier Inc.

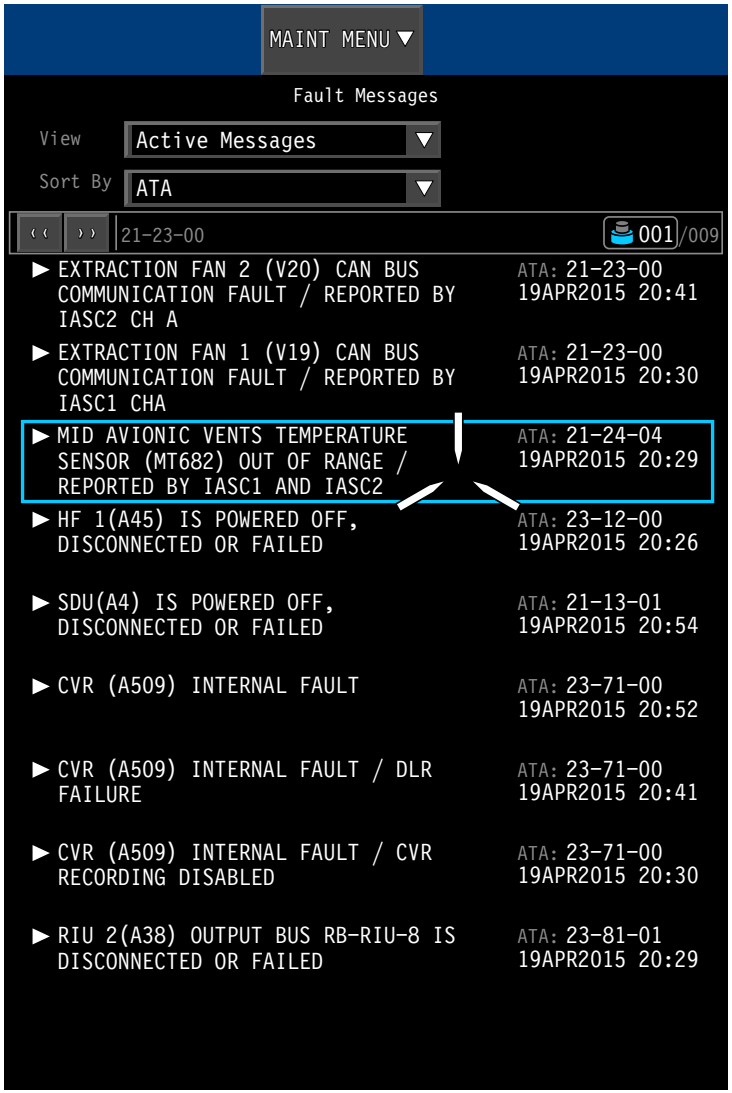

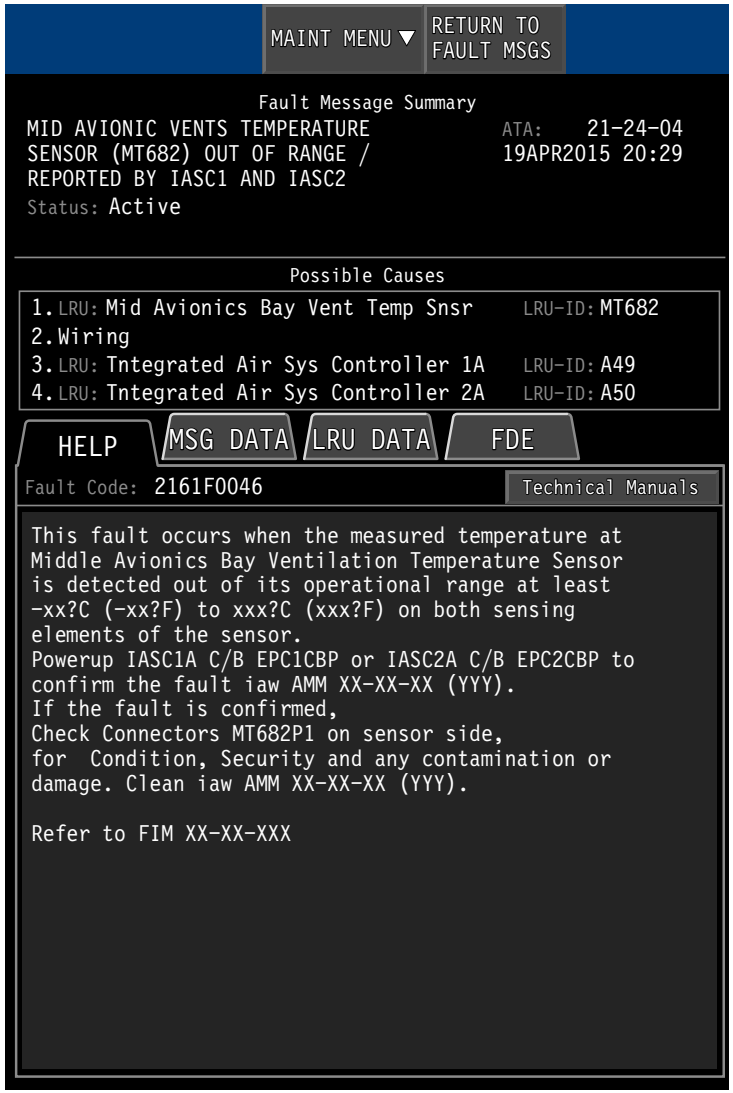

CS1_CS3_4500_038

Figure 11: Fault Message Scenario

MSG DATA Tab

The MSG DATA tab lists the line replaceable units (LRUs) reporting the fault information. In the example, IASC 1A, Label 363 shows ZONE_TS_CH_FAIL bit 17 reporting a 1. A 1 indicates a failure.

LRU DATA Tab

Looking further, the LRU DATA tab shows the sensor reporting the same condition.

Copyright © Bombardier Inc.

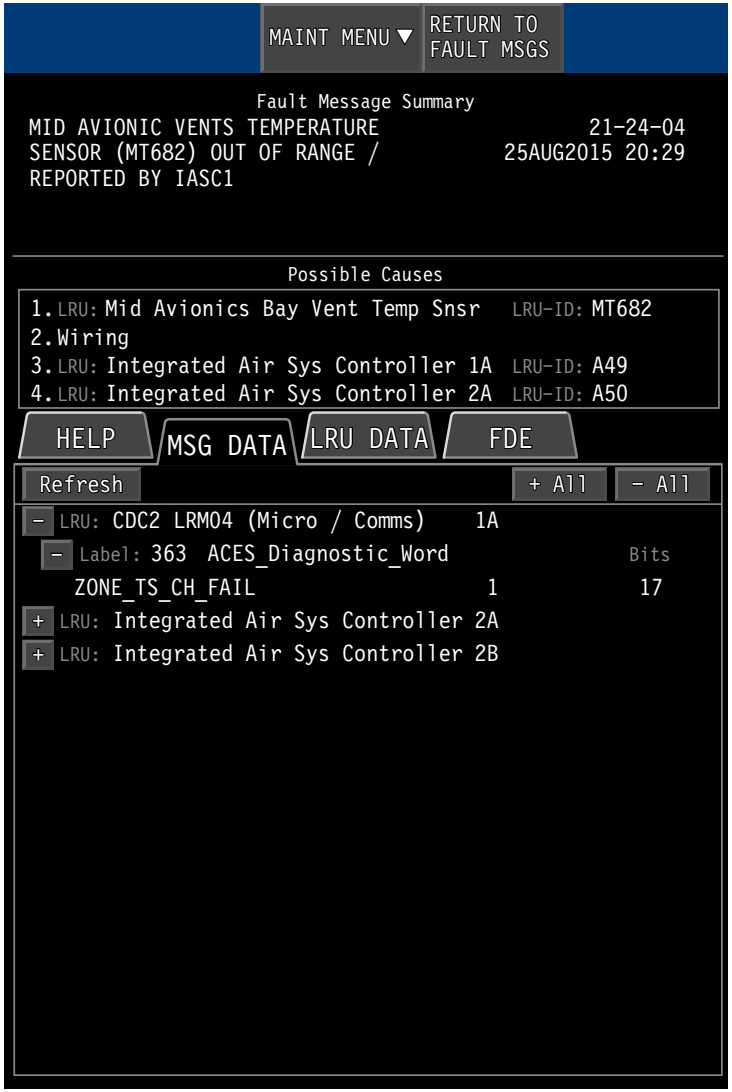

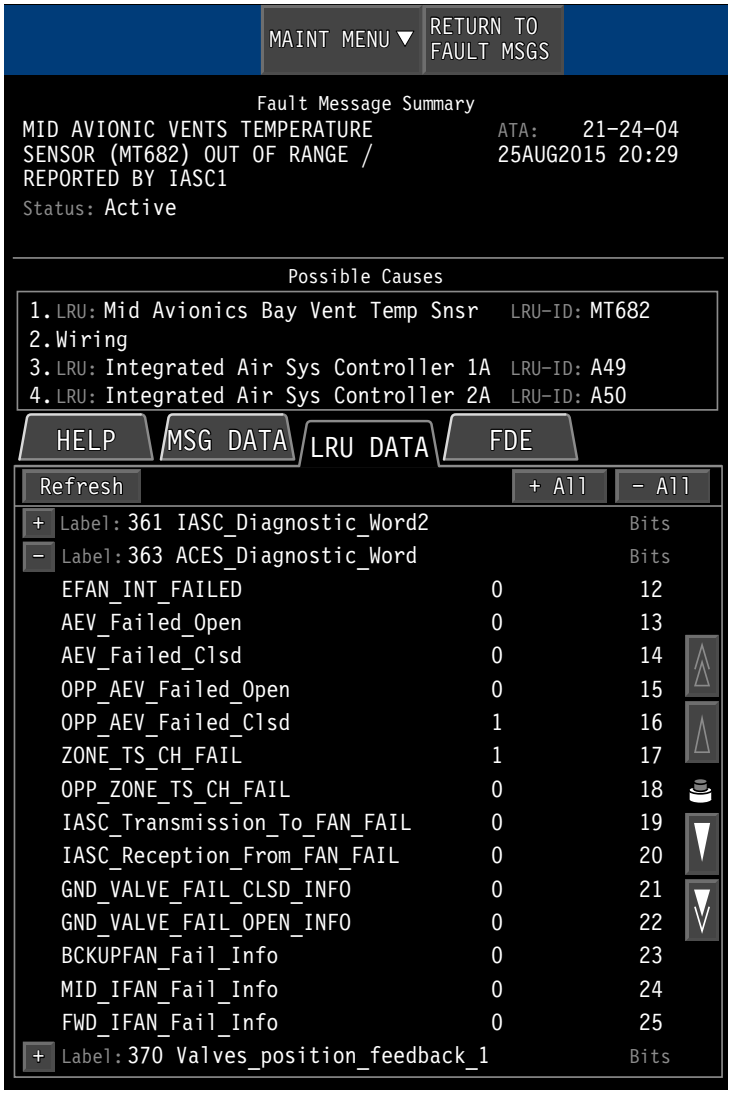

CS1_CS3_4500_039

Figure 12: Further Troubleshooting

Flight Deck Effect Relationship

Normally, all fault messages relate to a corresponding flight deck effect (FDE). In this example, the fault message has no corresponding FDE.

Copyright © Bombardier Inc.

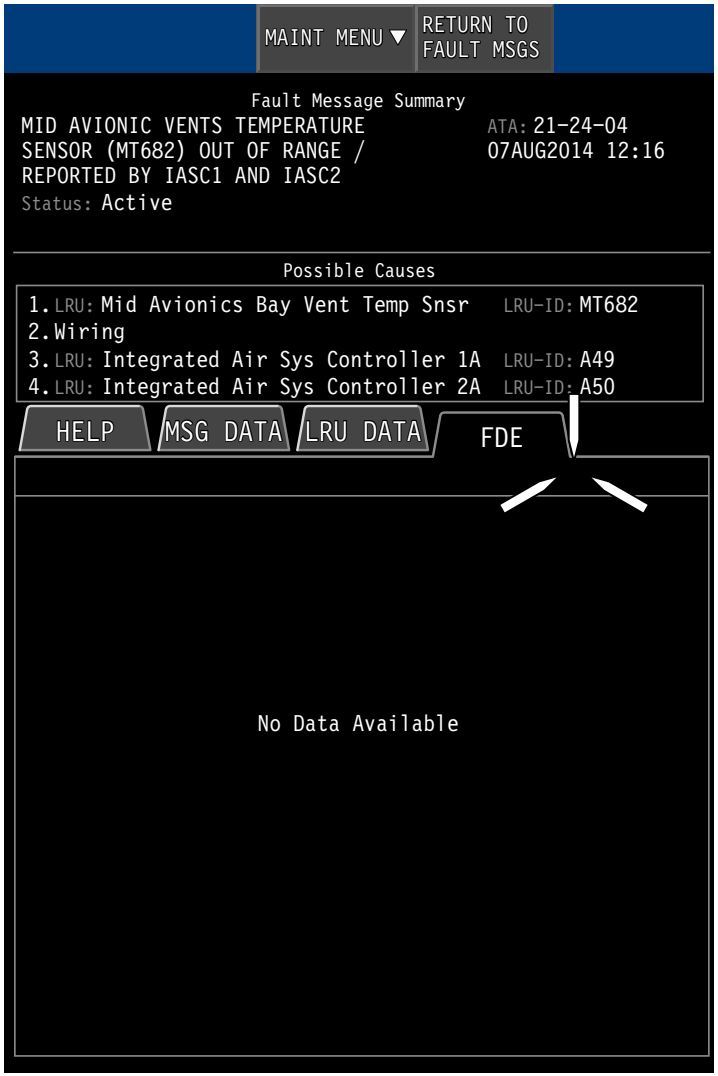

CS1_CS3_4500_040

Figure 13: Flight Deck Effect Relationship

Viewing Data

By going to the LRU/System Operations page, the data can be examined. In the DATA tab, the SENSOR STATUS is available. Selecting SENSOR STATUS shows all of the sensors monitored by the IASCs.

This tab is helpful in comparing the sensor outputs to each channel as well as comparing the sensors against other similar sensors.

Copyright © Bombardier Inc.

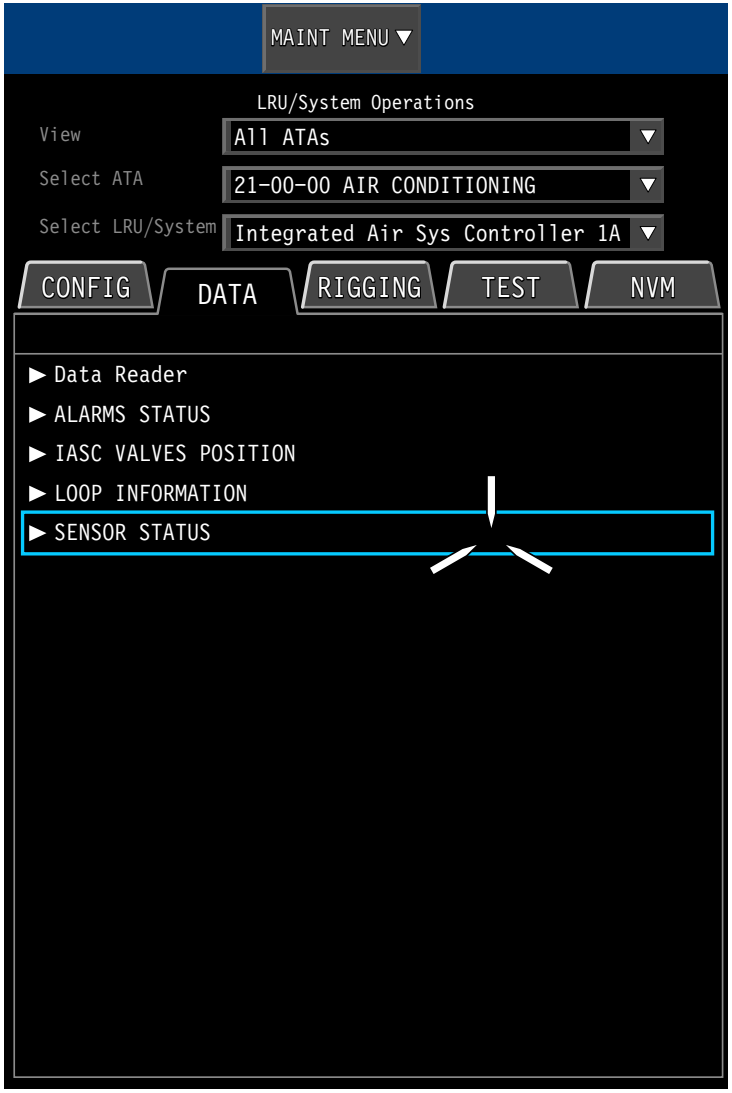

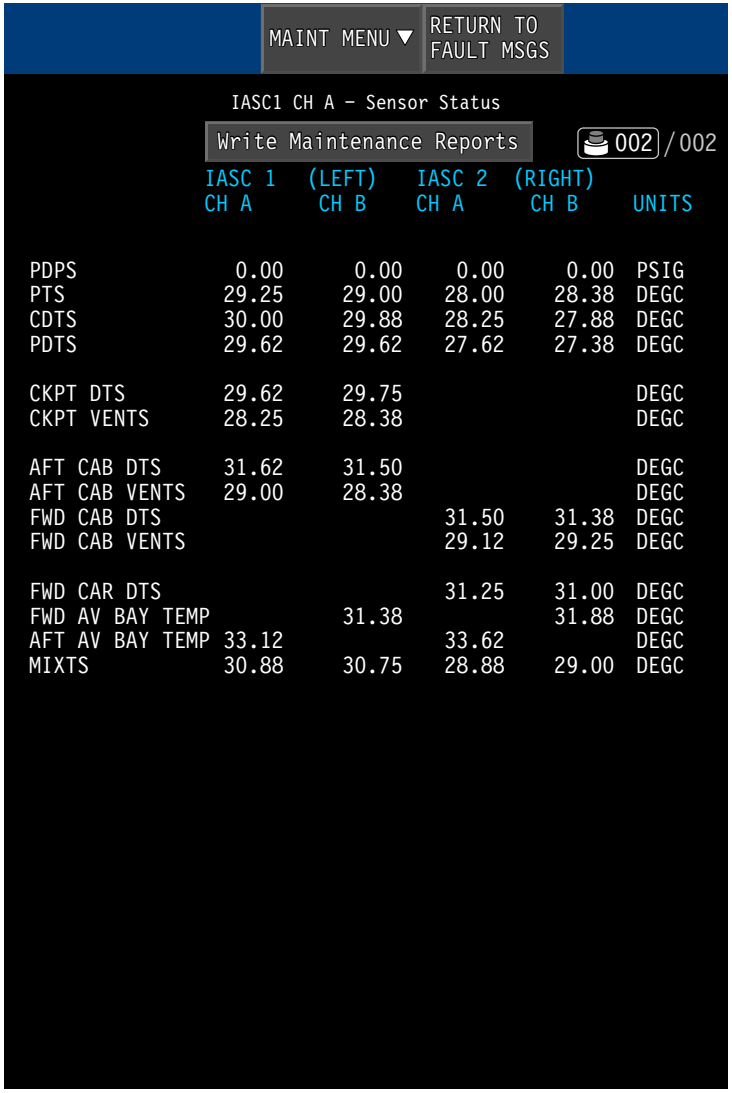

CS1_CS3_4500_041

Figure 14: Viewing Data

TEST Tab

Selecting the TEST tab brings up two test options. The VENTS sensor is tested by selecting the IBIT AIR CONTROL SYSTEM.

Copyright © Bombardier Inc.

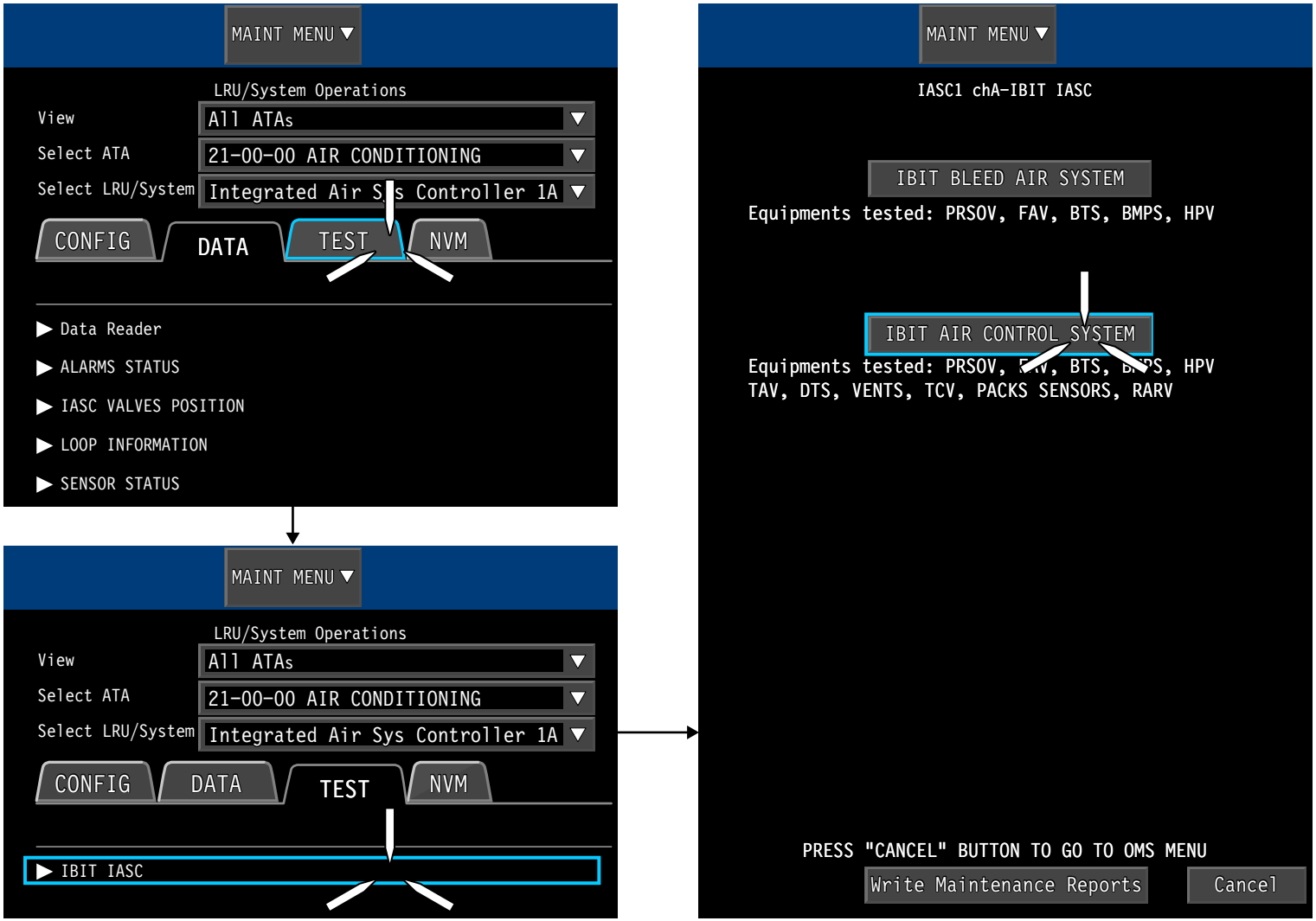

CS1_CS3_4500_043

Figure 15: Selecting the TEST Tab

Test Preconditions

Prior to beginning any test function, the OMS preconditions page identifies the cautions and warnings associated with the performance of the test.

The preconditions are the conditions required in order for a successful test to be accomplished. If any of the conditions are not met when the test is started, a warning is displayed that not all of the preconditions have been met.

Any inhibit or interlock conditions are also identified.

Copyright © Bombardier Inc.

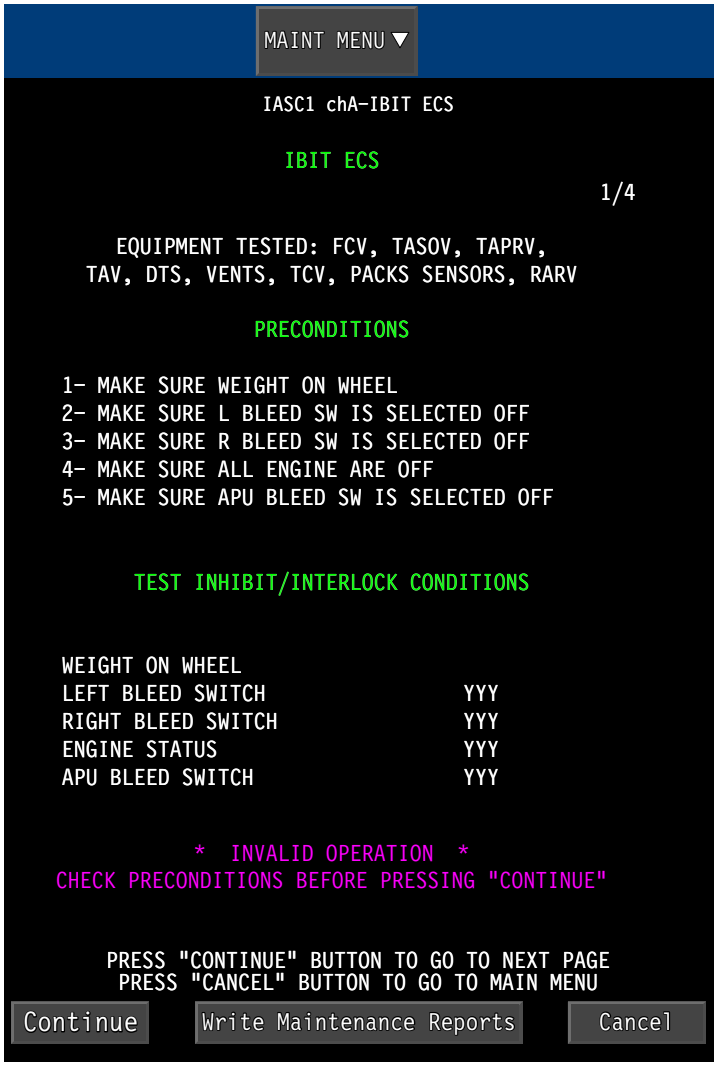

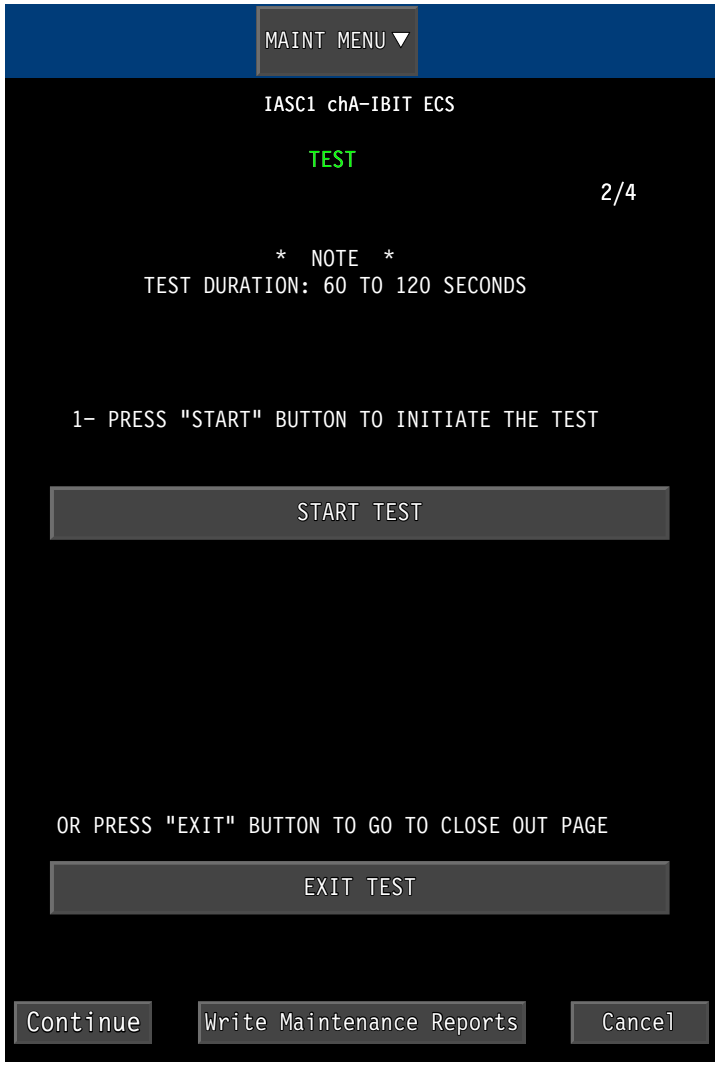

CS1_CS3_4500_056

Figure 16: Running the Test

Test Results

The TEST page displays the TEST DURATION and a TEST PROGRESS bar. The test can be manually aborted by selecting STOP TEST.

If an incorrect configuration occurs during a test, an INVALID OPERATION message appears.

The test result TEST OK or TEST FAILED displays at the end of the test.

Copyright © Bombardier Inc.

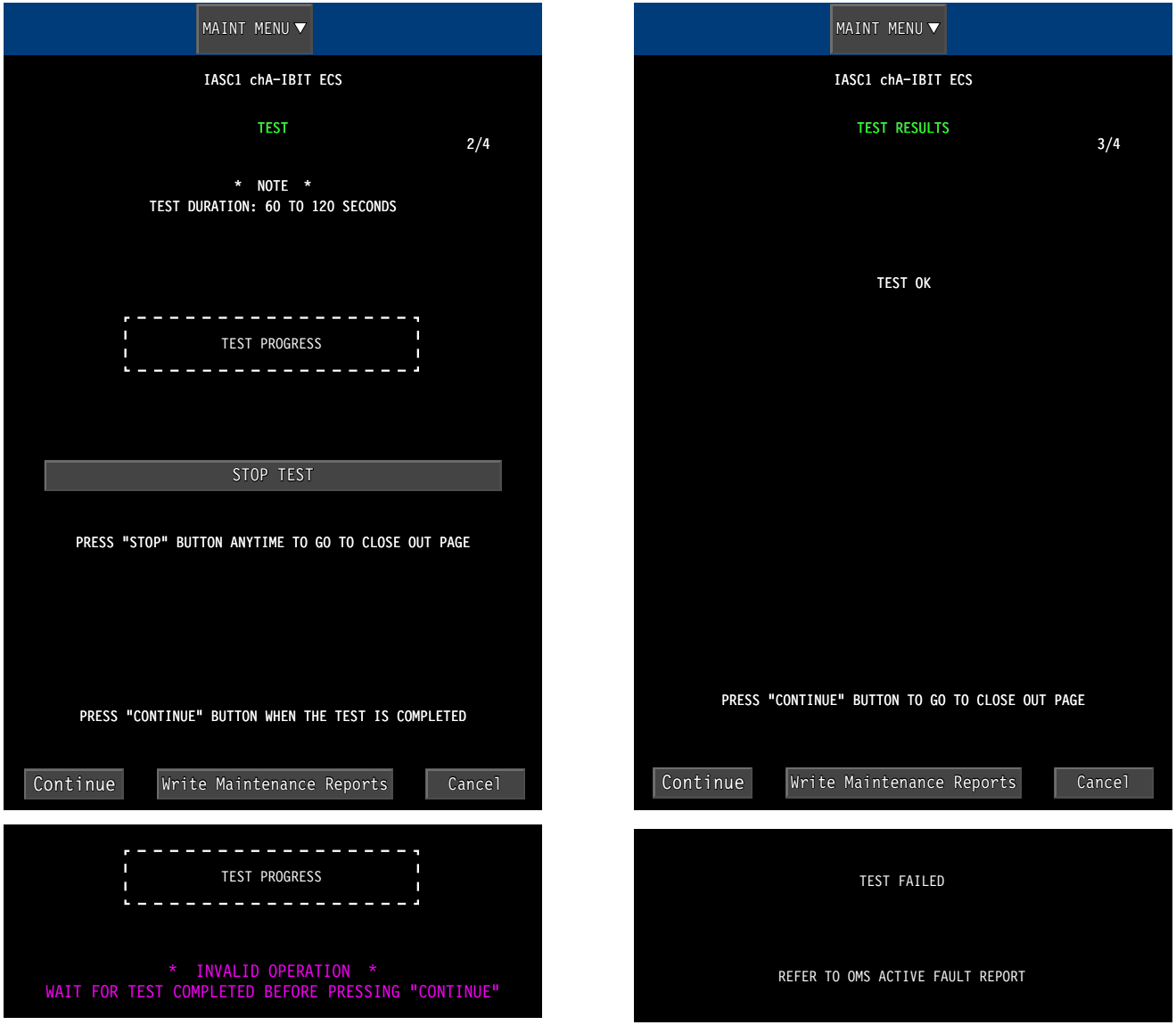

CS1_CS3_4500_057

Figure 17: Test Results

Test Close Out

The CLOSE OUT page identifies the activities to be performed at the conclusion of the test.

If the test procedure is self-terminated, a NOTE is displayed on the CLOSE OUT page. The test can be run again, after verifying all of the preconditions are observed, in order to perform a successful test.

Selecting the CANCEL soft key displays the MAIN MENU for the selected LRU on the LRU/System Operations page.

After a successful test, and the aircraft is restored to normal, the necessary paperwork and logbook entries can be made.

Copyright © Bombardier Inc.

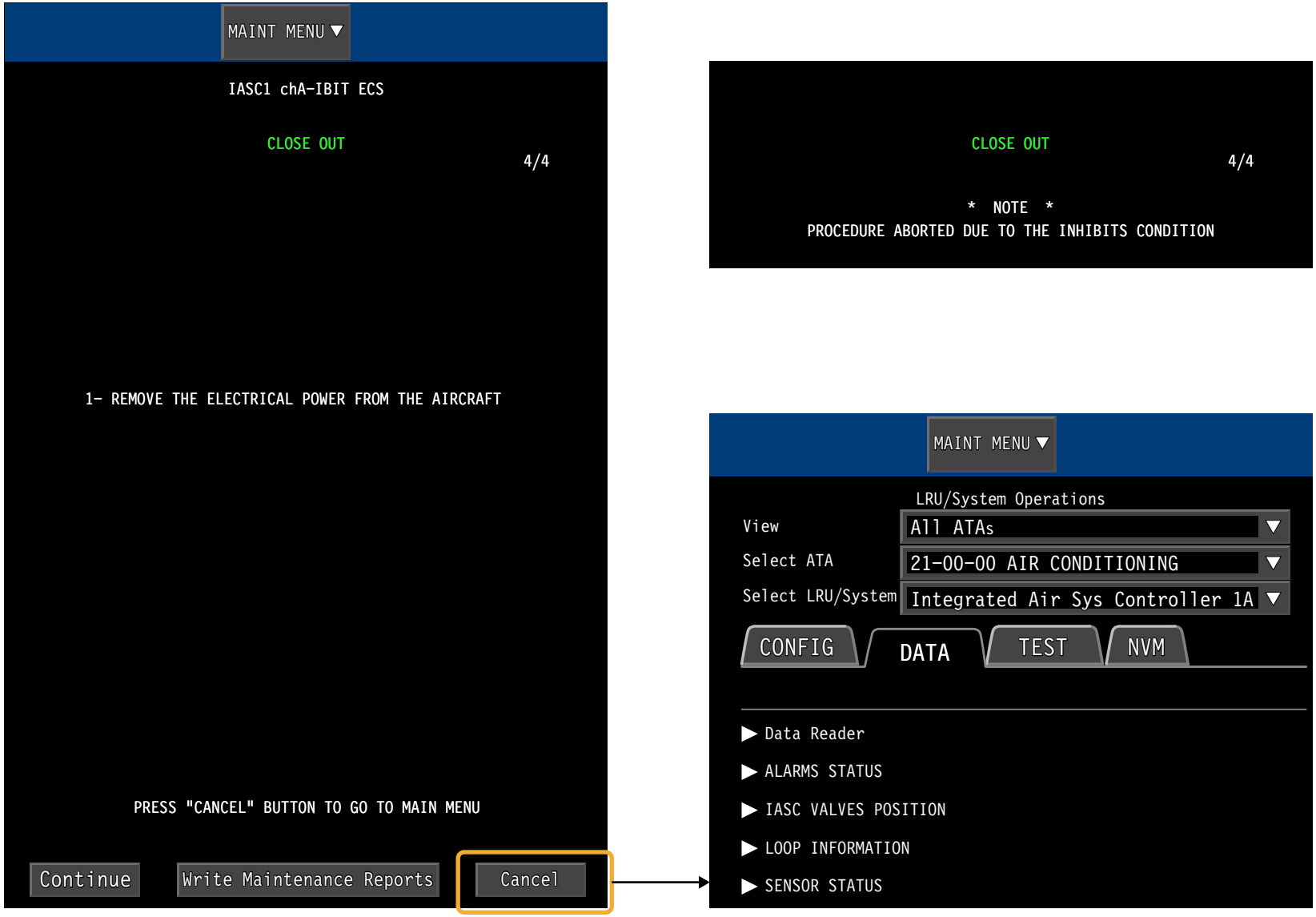

CS1_CS3_4500_058

Figure 18: CLOSE OUT Page

SERVICE MESSAGE SCENARIO

Service Message Handling

Service messages are not related to flight deck effects, although they may appear in conjunction with a flight deck effect (FDE). Service messages should be checked during every A Check, although airline policies may increase the frequency of checking the messages. The service message trigger point is normally set high enough that the aircraft could still be dispatched if it were not possible to carry out the servicing task.

In the example shown, the CREW OXY LO PRESS caution message is displayed on the engine indication and crew alerting system (EICAS) along with the CREW OXY bottle pressure showing 990 psi. The message is displayed if low-pressure in the supply distribution line is detected, or when the crew oxygen bottle pressure is below 1000 psi.

The CREW OXYGEN SYSTEM SERVICING REQUIRED service message is generated when the crew oxygen bottle pressure drops below 1500 psi. This may still be above the minimum dispatch requirements for airline operation.

Copyright © Bombardier Inc.

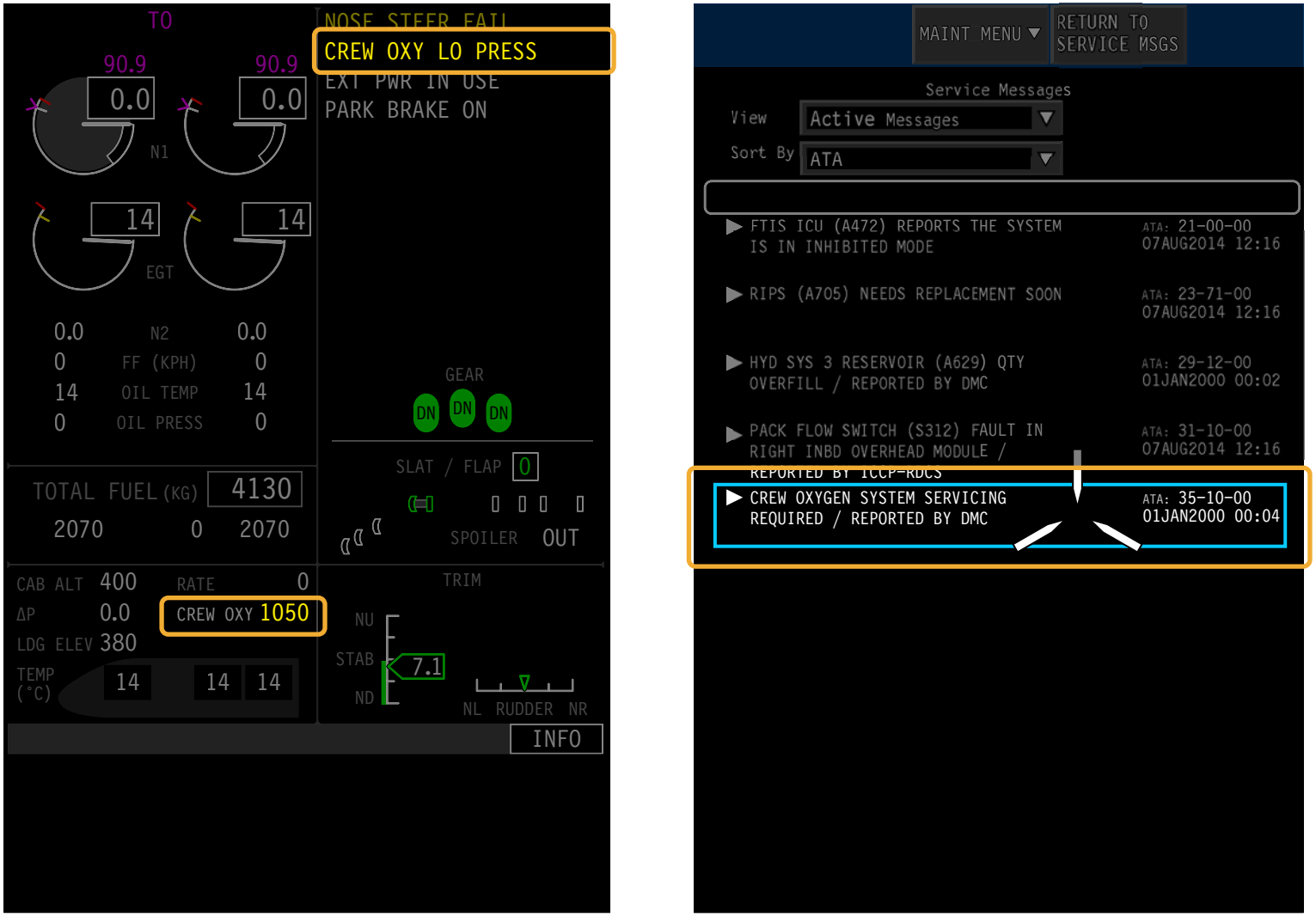

CS1_CS3_4500_036

Figure 19: Service Message Handling

Service Message Tabs

The HELP tab provides a description of why the message was generated and the tasks necessary to restore the system to normal.

The servicing can be completed using the Aircraft Maintenance Publication (AMP) references:

- Crew Oxygen System - Fill with Oxygen 12-10-35
- Crew Oxygen Cylinder - Remove and Install Procedure 35-11-04

The service message is not a latched message. The message clears when the servicing is complete.

If further troubleshooting is required for the service message, fault code and fault isolation manual references are provided.

The MSG DATA tab displays the unit reporting the service message along with the specific data monitored to generate the message. The LRU DATA tab displays the data monitored in the LRU that generates the service message. In this case no LRU data is monitored.

Copyright © Bombardier Inc.

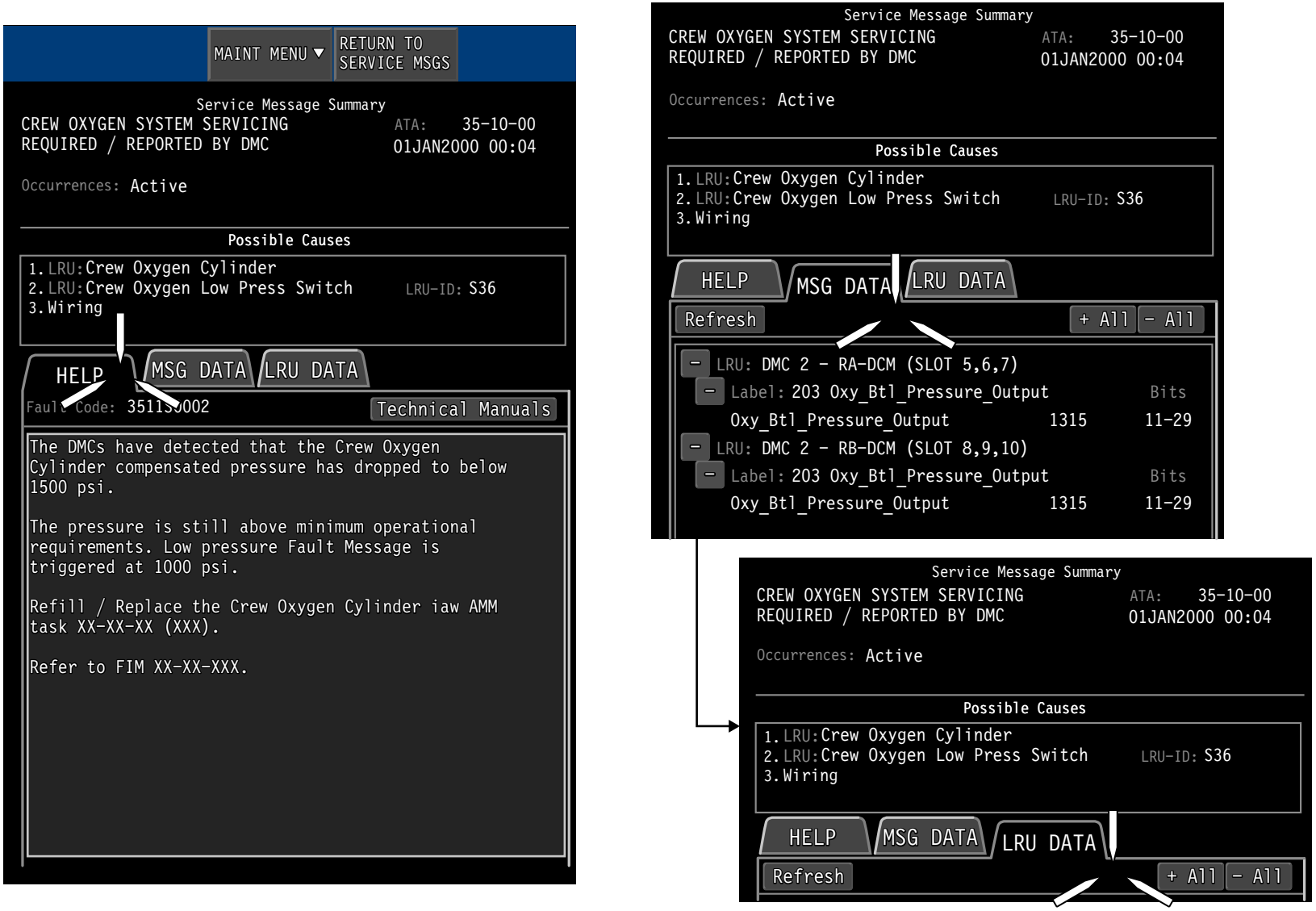

Figure 20: Service Message Tasks

ADVISORY MESSAGE SCENARIO

AVIONIC FAULT Message

An cyan advisory message is generated for crew awareness. A number of advisory messages are collectors for several INFO messages. The AVIONIC FAULT message is a generic message. The specific information related to the actual fault can be found in the info message on the INFO synoptic page.

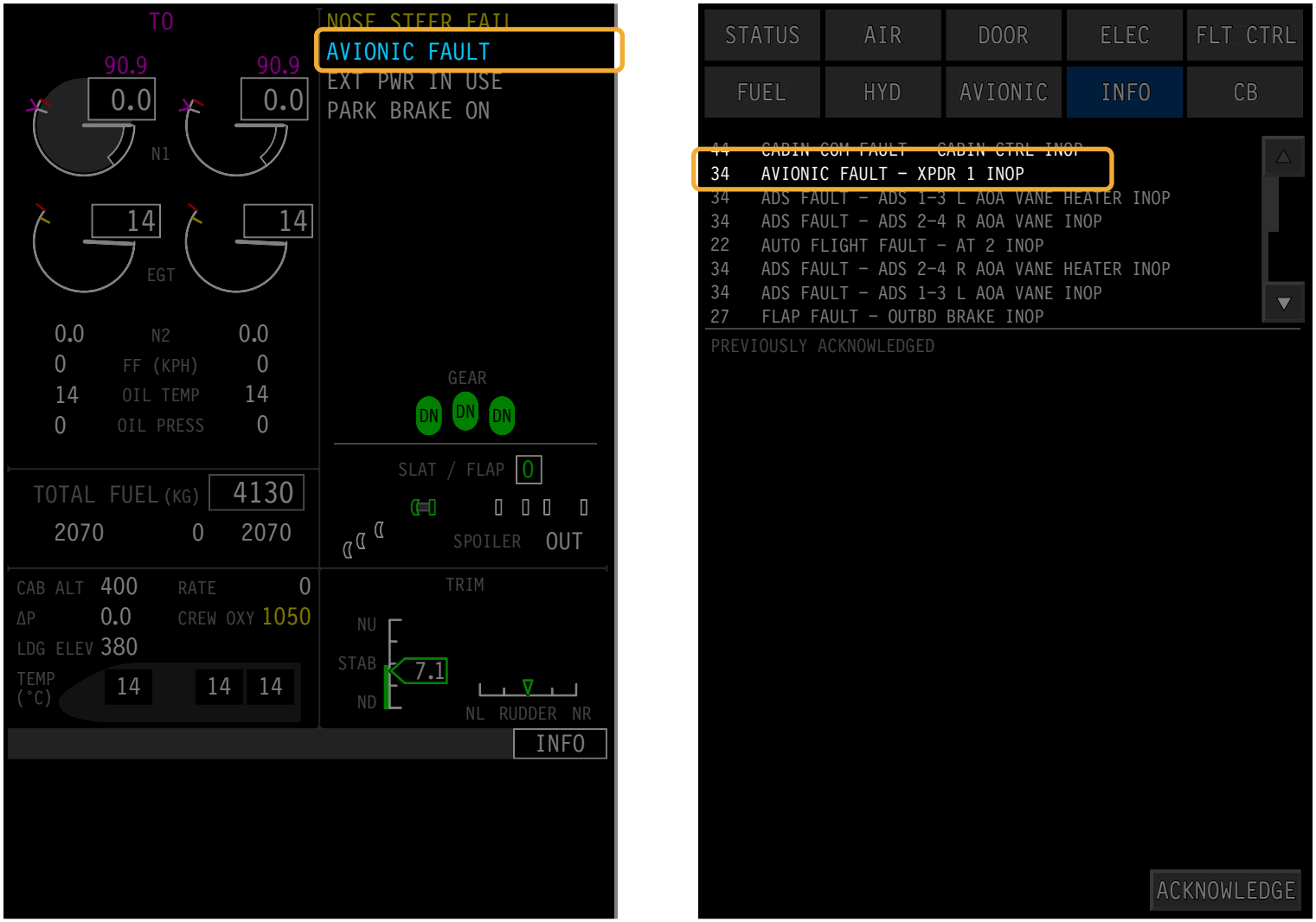

CS1_CS3_4500_045

Figure 21: Advisory and INFO Messages

Copyright © Bombardier Inc.

AVIONICS FAULT- Flight Deck Effects Page

The advisory and info messages appear in the Flight Deck Effects summary page.

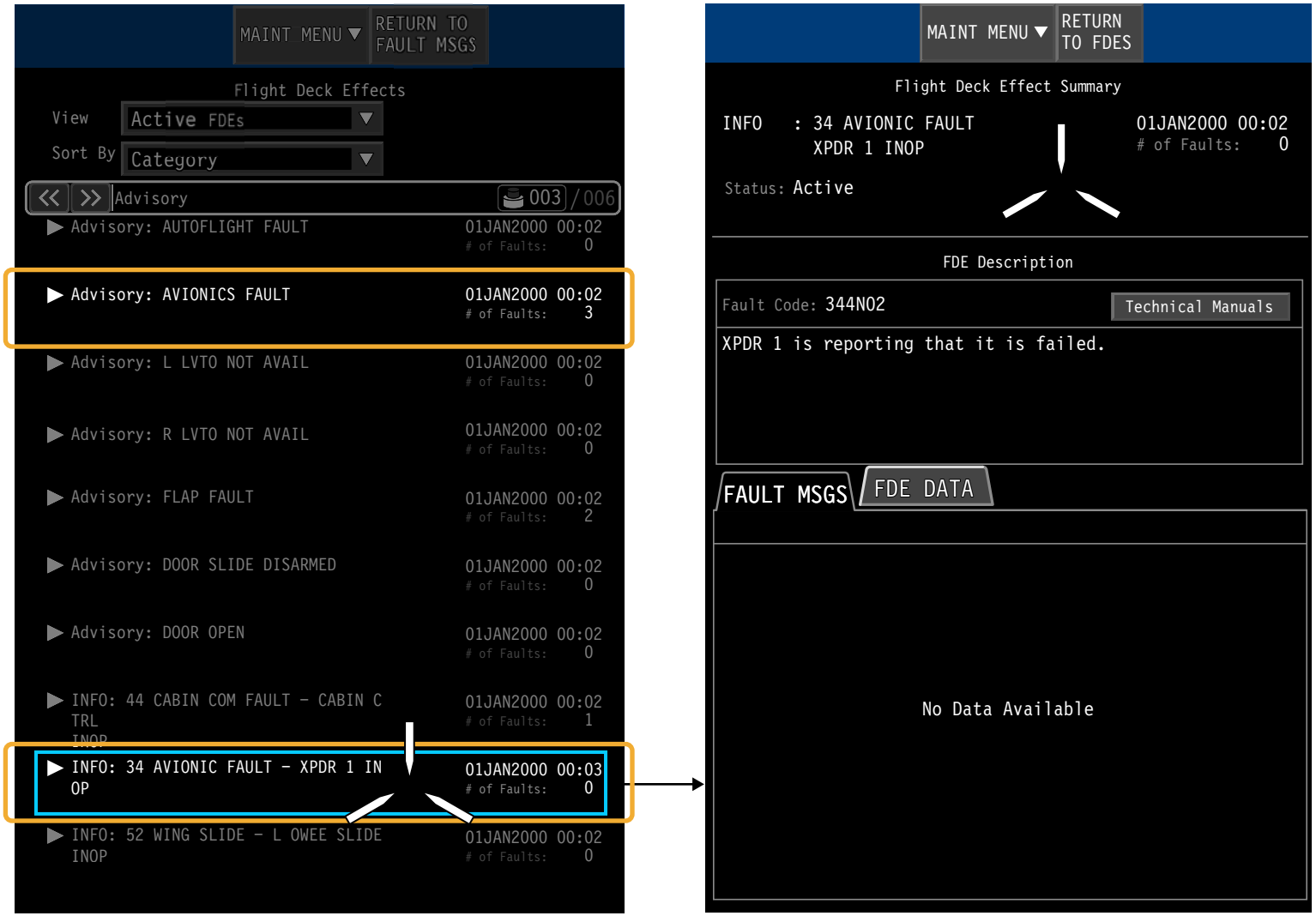

CS1_CS3_4500_111

Figure 22: AVIONICS FAULT – Flight Deck Effects

Minimum Equipment List - Dispatch

If the fault cannot be rectified prior to dispatch, the minimum equipment list (MEL) can be consulted to see if dispatch is possible. The MEL Section 2 has the related INFO message listed next to the MEL item. This ensures that the correct MEL item is applied for aircraft dispatch.

Copyright © Bombardier Inc.

CS100 Section 2 – CAS messages Aircraft CS100

CAS Message Indication	1.	2. Remarks and Exceptions
27-00-205-01 **FLAP FAULT** (ADVISORY) 27 FLAP FAULT – LEVER SNSR REDUND LOSS	C	May be displayed.
27-00-207-01 **FLAP FAULT** (ADVISORY) 27 FLAP FAULT – OUTBD BRAKE PROX SNSR INOP	C	May be displayed.
27-00-209-01 **FLAP FAULT** (ADVISORY) 27 FLAP FAULT – PDU FAULT	C	May be displayed.
27-00-211-01 **FLAP FAULT** (ADVISORY) 27 FLAP FAULT – SKEW SNSR REDUND LOSS	B	May be displayed.
27-00-213-01 **FLAP SLOW** (ADVISORY) 27 FLAP SLOW – CHAN 1 INOP	B	(O) May be displayed provided: (a) None of the following messages are displayed: 27 FLAP SLOW – CHAN 2 INOP 27 SLAT SLOW – CHAN 1 INOP 27 SLAT SLOW – CHAN 2 INOP (b) Operations are conducted in accordance with AFM Supplement (Operations with Airplane Systems Inoperative), and (c) SFECU Flap Channel 1 is deactivated. NOTE: Flap will operate at half speed.
27-00-213-03 **FLAP SLOW** (ADVISORY) 27 FLAP SLOW – CHAN 2 INOP	B	(O) May be displayed provided: (a) None of the following messages are displayed: 27 FLAP SLOW – CHAN 1 INOP 27 SLAT SLOW – CHAN 1 INOP 27 SLAT SLOW – CHAN 2 INOP (Cont'd)

CS1_CS3_4500_087

Figure 23: Minimum Equipment List – Dispatch

DATA BUS READER SCENARIO

APU Run - 400 Hz Command Function Test

Certain Aircraft Maintenance Publication (AMP) tasks require the use of the OMS data reader function. In AMP task 49-10-00, the APU 400 Hz run command function is tested. In this task, the APU is started and allowed to stabilize. On the ground, the APU runs at a variable speed, therefore the APU generator frequency is variable. The APU frequency is monitored on the ELECTRICAL synoptic page.

When an electrical appliance, such as a vacuum cleaner, is plugged into any of the galley electrical outlets, the APU generator frequency should become fixed at 400 Hz.

Copyright © Bombardier Inc.

Procedure

1 400Hz command APU test

1.1 Make sure the following conditions are met:

1.1.1 A/C power is set to ON.BD500-A-J24-70-00-00AAA-34DB-A

1.1.2 APU is running and stabilized.

1.1.3 On the ELECTRICAL Panel, APU GEN PBA pushed in. Fig. 1

1.2 On Overhead Module AIR and ELECTRICAL Panel; verify that the panel is configured as follows: Fig. 2

Control	Setting
L BLEED	PBA in (OFF light on)
L PACK	PBA in (OFF light on)
X BLEED KNOB	AUTO
APU BLEED	PBA in (OFF light on)
R PACK	PBA in (OFF light on)
R BLEED	PBA in (OFF light on)
APU GEN	PBA out

1.3 After 2 minutes, on STATUS synoptic page, RPM is 99+/-1 % speed. Fig. 3

1.4 On AFD 2, EICAS primary page, the following CAS messages is shown:

CAS Message	Category - Inhibited during
APU ON	Status (White)

1.5 In Cabin area, in galley 1 or 4, plug in any electrical fixture into maintenance outlet.

1.5.1 Electrical fixture is operational.

1.6 Get access to the OMS LRU/System Operations page - Data page, then select ATA 49 APU. Refer to BD500-A-J45-45-00-04AAA-34DB-A

Note

Use the Cursor Control Panel (CCP) trackball and its select buttons to control the MFW.

1.7 From the APU ECU Data page, select the Label 273.

1.7.1 On the APU ECU Data Reader page, make sure that the following bits are set as follow:

- Label 273, Bit 13 (APU_400HZ_CMD_SWITCH_ON) is set to 1.

1.8 On the ELECTRICAL synoptic page, verify that the APU GEN frequency is 402.5Hz ±2.5 Hz.

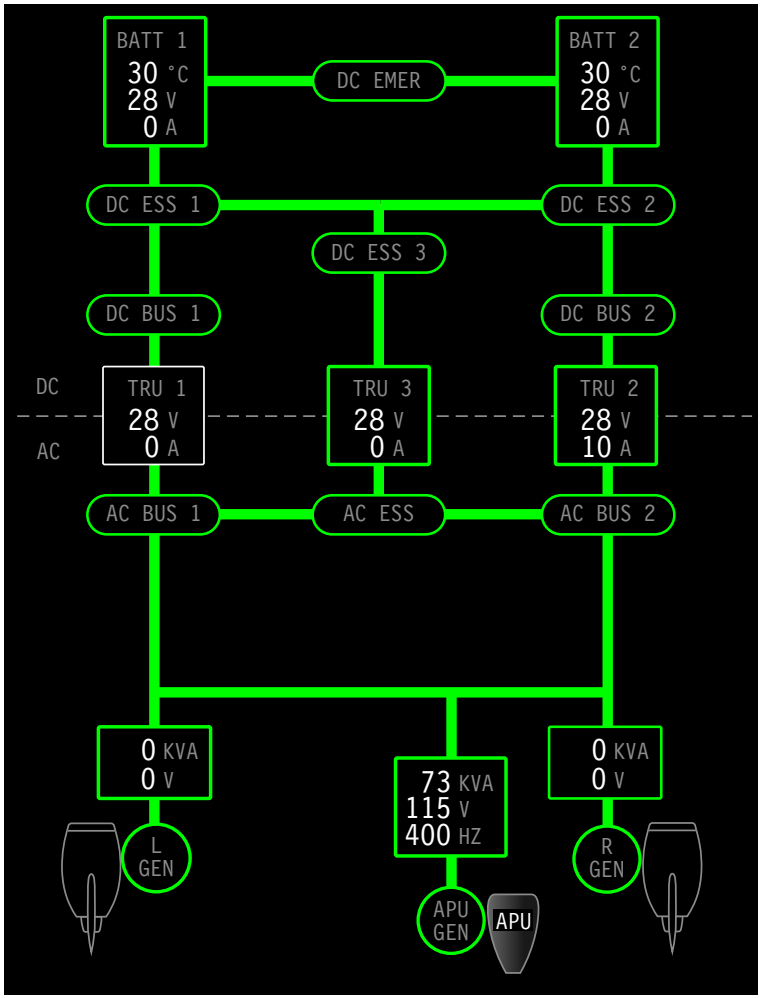

SYNOPTIC PAGE - ELECTRICAL

CS1_CS3_4500_062

Figure 24: Data Bus Reader Scenario

APU ECU - Data Reader Page

The APU ECU - Data Reader page is selected by going to the LRU/ System Operations page and selecting the DATA tab.

To access the Data Reader page:

- Select the Data Reader from the DATA tab
- Use the trackball and cursor, or the cursor control panel double stack knob, to scroll down to Label 273
- Click on the + symbol to expand the label
- BIT 13 (APU_400Hz_CMD_SWITCH_ON) should be 1 as per the AMP
- On the ELECTRICAL synoptic page, the frequency reads 402 ± 2.5 Hz

Copyright © Bombardier Inc.

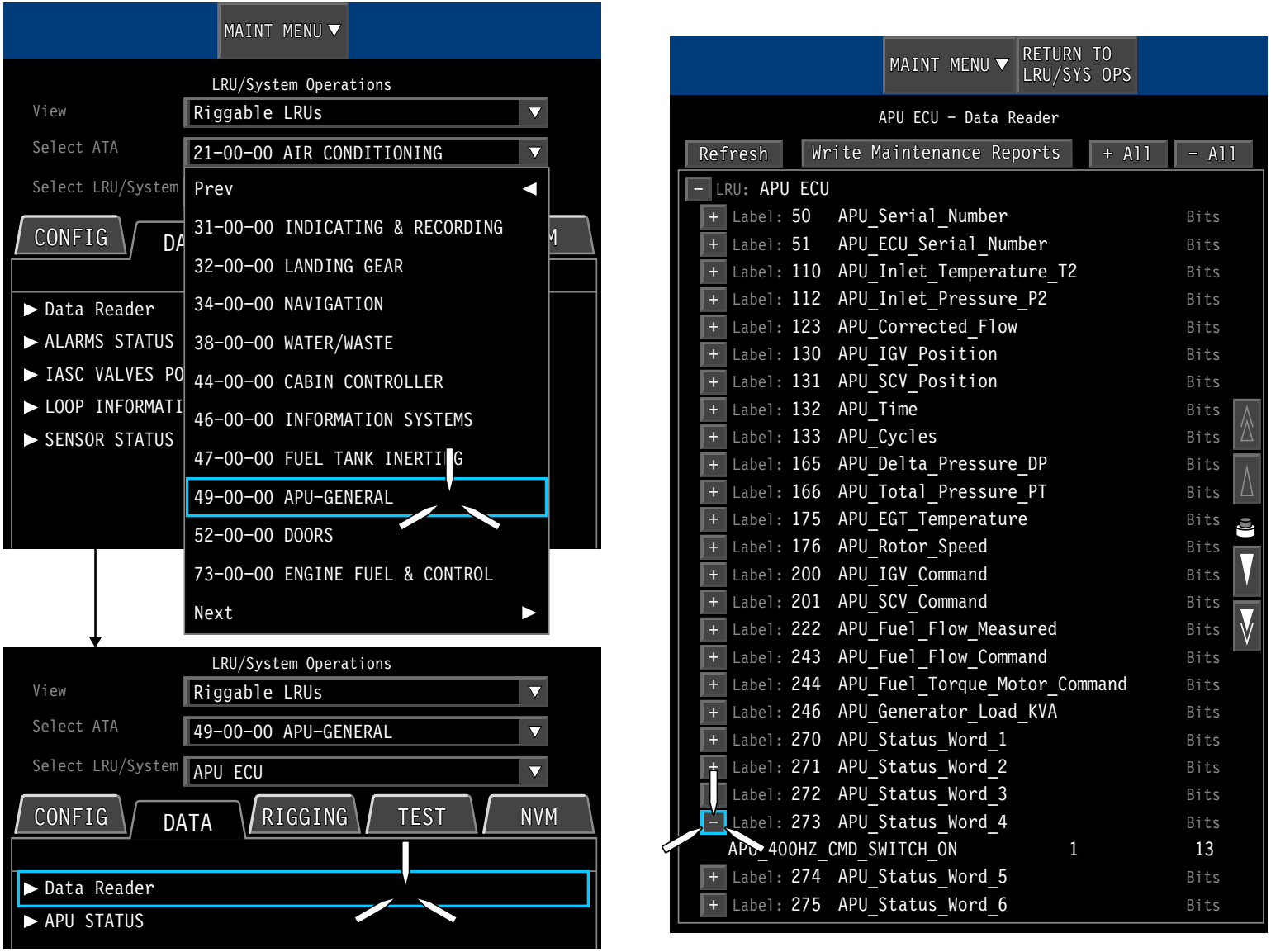

Figure 25: APU ECU - Data Reader Page

PAGE SELECTION OPTIONS

Post Flight Summary

Selecting View Post Flight Summary on the Maintenance Main Menu provides access to a list of flight legs. The flight legs can be sorted for display as follows:

- Most Recent to Oldest
- Flight #
- From
- To

Selecting a flight leg displays a Post Flight Summary Details Page and the information associated with that flight leg. The available menus are as follows:

- FDE
- FAULT
- SERVICE
- SRVCING

When the FDE tab is displayed, a list of the FDEs that occurred during the flight leg is displayed. The FDE includes all CAS and INFO messages with the date and time of occurrence. The current status of the FDE and the flight phase when the FDE originally occurred is also displayed.

The OMS generates a Post Flight Summary (PFS) report for each flight leg. The report is available on the aircraft, or can be sent automatically through the aircraft health management unit AHMU to a ground station by GSM or WiFi transmission, depending on the operator configuration option settings.

The flight phases in the OMS are defined differently than those in the DMC (see ATA 31-40). The DMC indicates 10 flight phases, while the OMS specifies 12 phases. This allows the OMS to identify more precisely where the fault actually occurred:

- Maintenance
- Ground
- Engine start
- Taxi out
- Takeoff
- Climb
- Cruise
- Approach
- Go around
- Landing
- Rollout
- Taxi in

Copyright © Bombardier Inc.

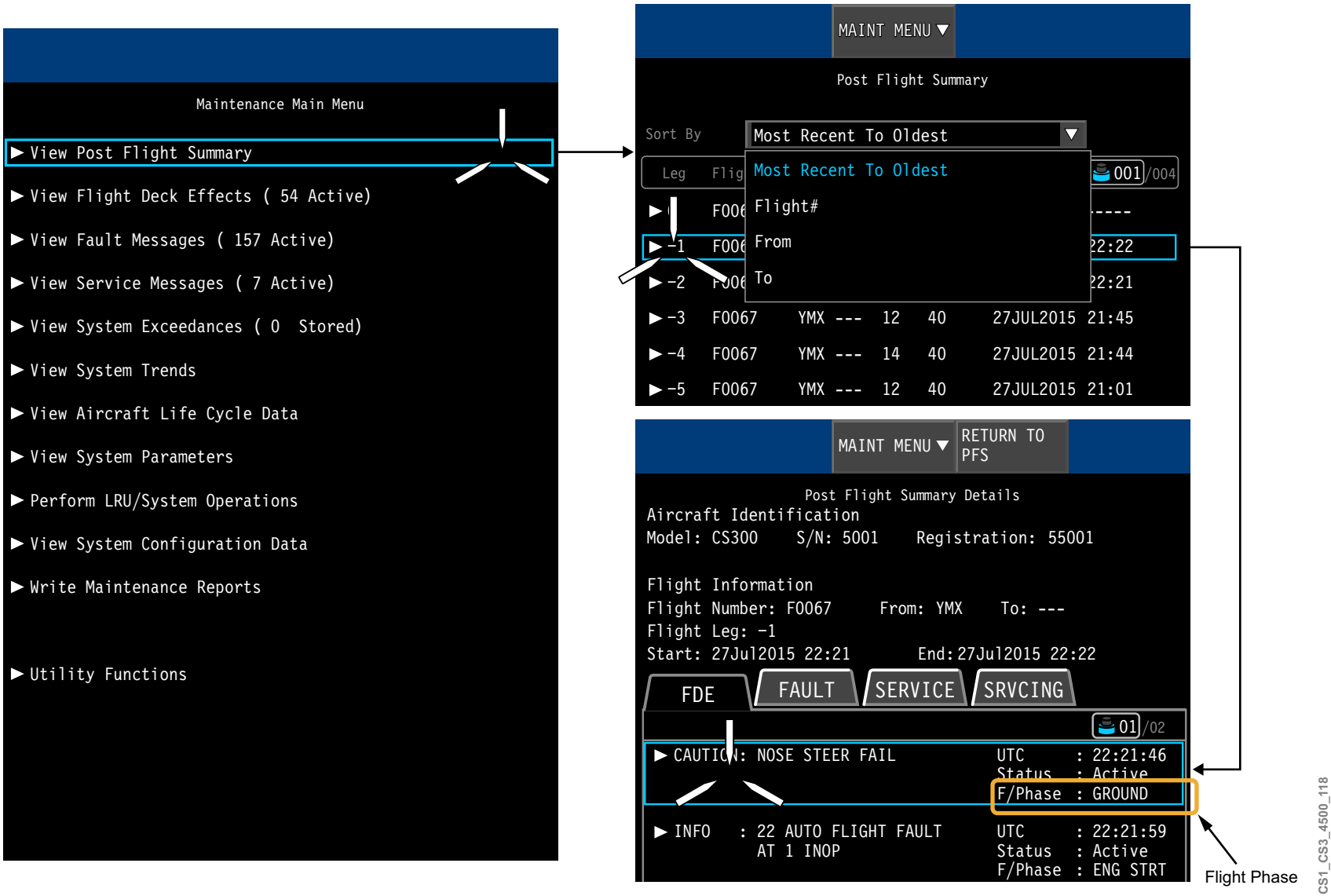

Figure 26: Post Flight Summary – FDE Tab

Post Flight Summary - FDE

Selecting a specific FDE on the Post Flight Summary Page displays a summary of information related to the FDE. The fault code and a plain English explanation of the FDE are provided.

The following tabs are displayed on the Flight Deck Effect Summary page:

- FAULT MSGS
- FDE DATA

Selecting the FAULT MSGS tab displays additional information on the fault with possible causes if available.

Occurrence and Recurrence

When selecting a specific flight deck effect, fault, or service message in a Post Flight Summary, information about the number of times the problem occurred during a specific flight leg and the number of previous recurrences of the fault in the last 20 flights is available.

The number of times a specific fault occurred during a given flight. A value is greater than 1 means the fault was intermittent. The time stamp is linked to the first time the problem occurred.

The recurrence specifies the number of times the fault occurred at least once per flight in the last 20 flights.

NOTE

The list of possible causes is based on assumptions about probability of occurrence and is not based on actual aircraft data.

Copyright © Bombardier Inc.

Figure 27: Post Flight Summary – FDE

Copyright © Bombardier Inc.

Post Flight Summary Details Page - FAULT Tab

The FAULT tab on the Post Flight Summary Details page provides a list of fault messages that occurred during the flight leg.

The fault message includes the date and time of occurrence, as well as the current status and the flight phase when the fault message originally occurred.

The following tabs are available on the Fault Message Summary page:

- HELP
- MSG DATA
- LRU DATA
- FDE

Copyright © Bombardier Inc.

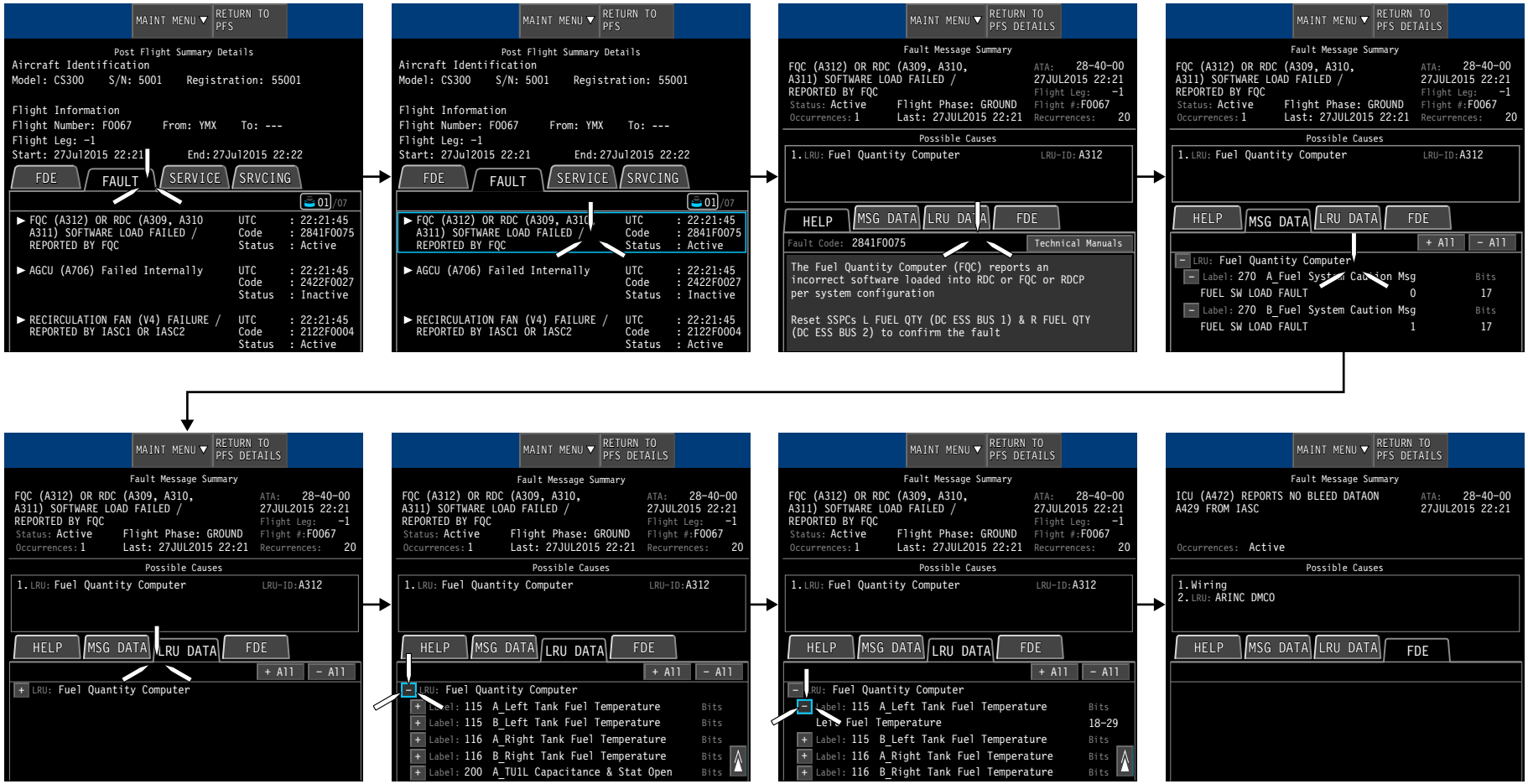

Figure 28: Post Flight Summary Details Page – FAULT

Post Flight Summary Details - SERVICE

The SERVICE tab on the Post Flight Summary Details page provides a list of items that require servicing in order of occurrence. Each message is associated with an ATA reference, and the date and time of posting.

Figure 29: Post Flight Summary Details – SERVICE

Post Flight Summary Details - SRVCING

The SRVCING tab on the Post Flight Summary Details page provides specific data related to the servicing aspects of the aircraft. The tab displays the computed report parameters such as the maximum altitude during cruise, date and time at takeoff, fuel quantity at takeoff, the fuel quantity at landing, etc. The data is arranged in parameter groups. A maximum of 17 groups, with a maximum of 100 parameters is available for display.

Copyright © Bombardier Inc.

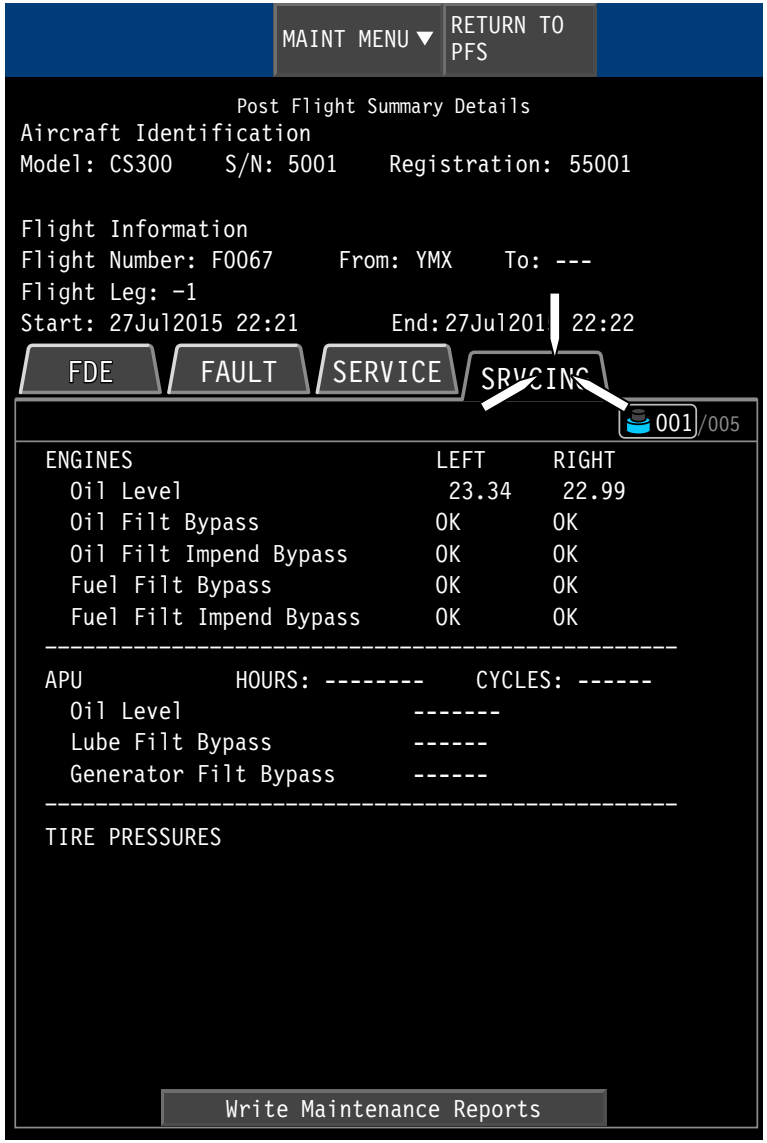

CS1_CS3_4500_114

Figure 30: Post Flight Summary Details – SRVCING

Flight Deck Effects Page

The flight deck effects page displays current and historical CAS messages logged in the OMS. Warning, caution, advisory, and INFO messages are logged as FDEs.

The OMS stores 40 flight deck effects for up to 65 flight legs for a total of 2600 FDEs. Once the maximum number of flight deck effects has been stored for a single flight leg, subsequent FDEs are no longer recorded for that flight leg.

The FDEs can be viewed and sorted as follows:

- Active
- Historical
- All

The FDEs can further be sorted as follows:

- Alphabetically
- Category
- Date & Time

When more than one page of messages are available, the double stack knob on the cursor control panel (CCP) (ATA 31) is used to access further pages.

Arrow keys can be used to advance through the FDE list depending on which Sort By selection is made. If the FDEs are sorted by Category, then the arrow keys move the message list from Warning to Caution to Advisory to INFO. If the list is sorted Alphabetically, the messages advance to the next letter. If the messages are sorted by Date and Time, the message list advances to the next date and/or time.

Copyright © Bombardier Inc.

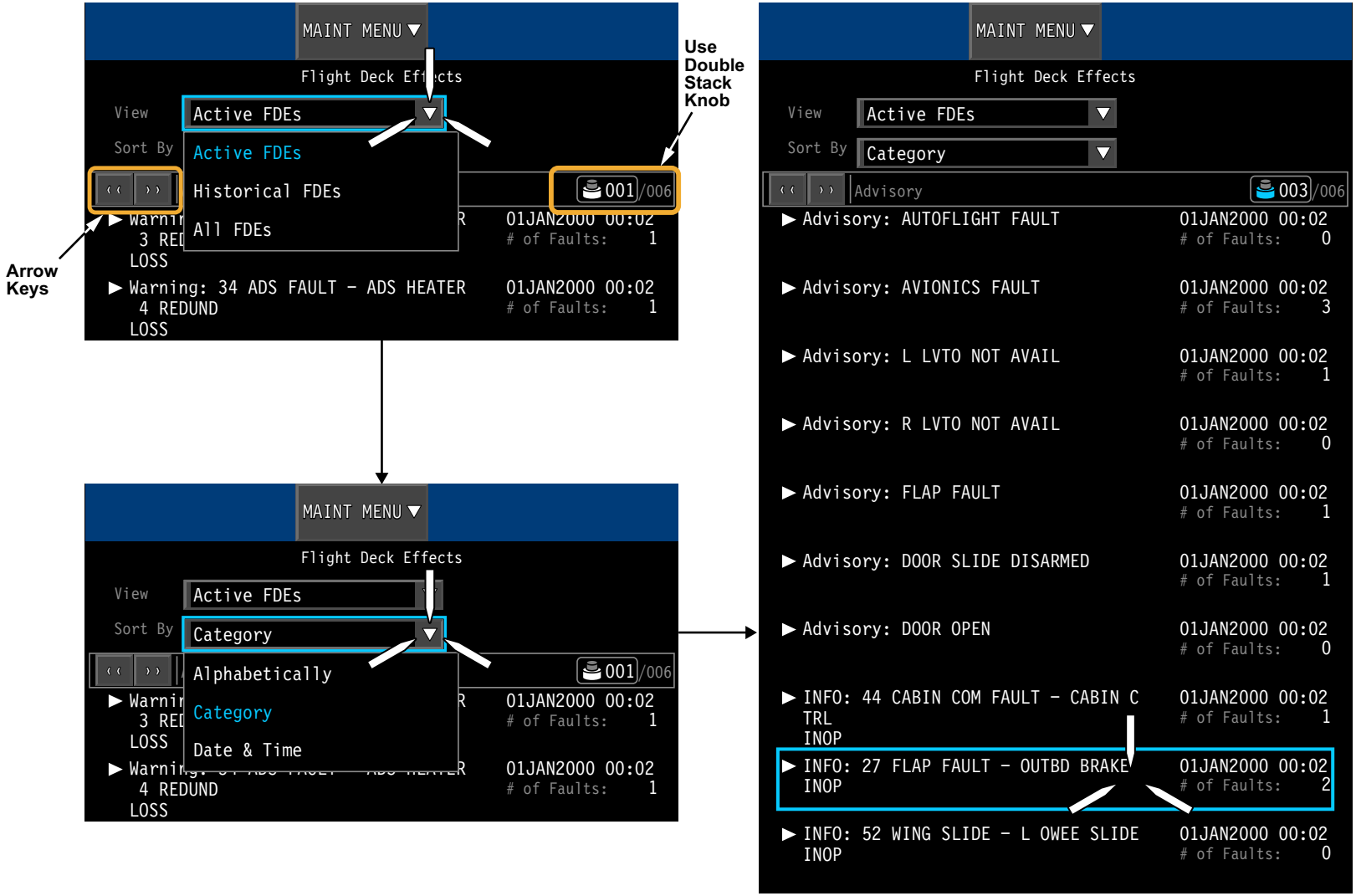

Figure 31: Flight Deck Effects Page

Flight Deck Effect Summary Page

Selecting any FDE message brings up the Flight Deck Effect Summary page. The Flight Deck Effect Summary page includes the following information:

- CAS message
- Category
- Number of correlated faults
- Date and time of first occurrence (subsequent occurrences increment number counter only)
- Correlated fault messages
- FDE description
- Number of occurrences

The format displays the flight phase and flight leg for a historical flight deck effect.

The FDE description shows the FDE fault code and up to six lines of descriptive text.

FAULT MSGS Tab

The FAULT MSGS tab is displayed by default. It provides a list of active or historical fault messages that occurred in the same flight leg as the selected CAS message. The following information is included for each fault message entry:

- Fault message
- ATA
- Date and time of occurrence

The flight leg number is displayed for each historical fault message entry.

FDE DATA Tab

The FDE DATA tab displays CAS message data (ARINC labels or Ethernet network data objects (NDOs)) for each reporting LRU as an aid to further troubleshooting.

The FDE DATA tab contains +All and -All keys that expand or collapse the displayed detailed CAS message data. The data displayed was recorded at the time of the fault. A Refresh key allows real-time data to be displayed.

When making the expanded selection, all the LRU items and NDO/Label entries are displayed.

The FDE DATA tab can be scrolled through when the expanded/collapsed list does not fit on a page and can display up to 15 LRU, NDO/label, and byte/bits field entries per page.

Copyright © Bombardier Inc.

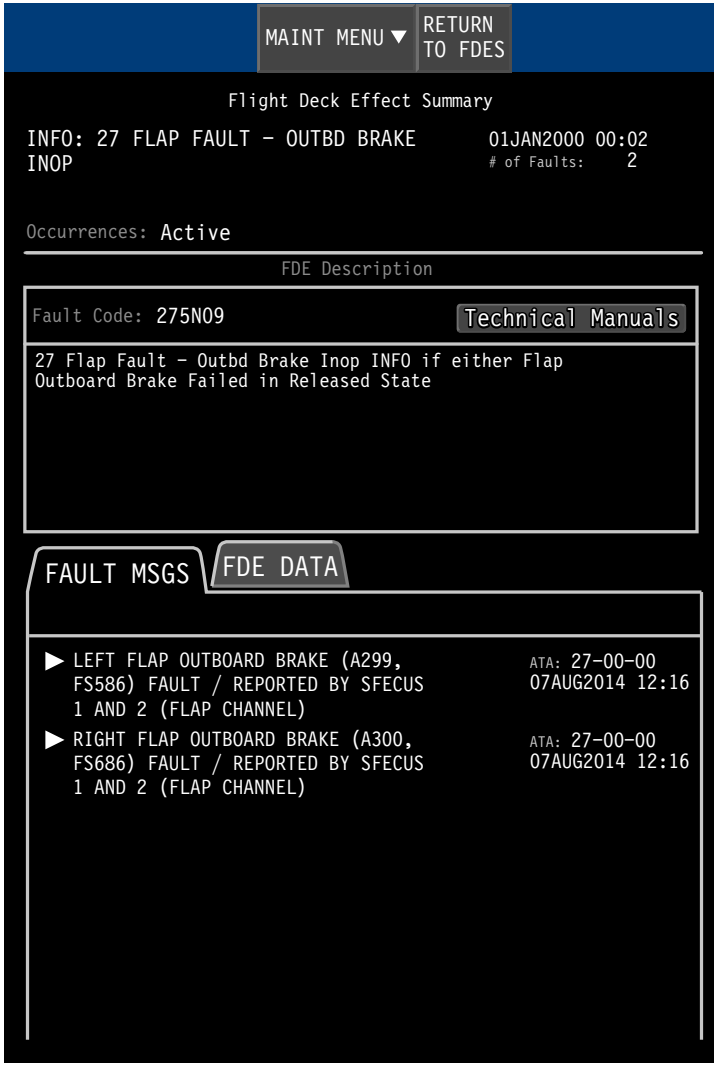

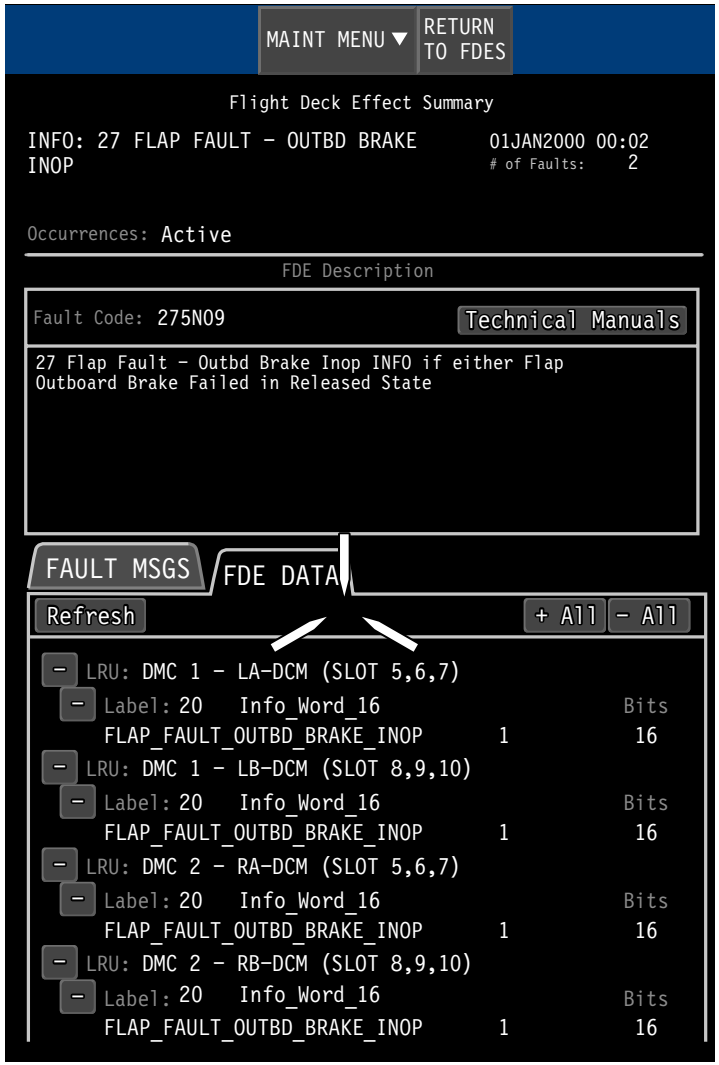

CS1_CS3_4500_085

Figure 32: Flight Deck Effect Summary Page

Fault Messages Page

The Fault Messages page displays current fault and historical fault messages logged in the OMS. These messages identify conditions that require a corrective action. The list can be filtered in the View drop-down box to show either Active, Historical, or All Messages. Additionally, the list of messages can be sorted by ATA, Date and Time, or Alphabetically in the Sort By drop-down box.

A maximum of nine fault messages are displayed per page. If there are more than nine messages, additional pages can be accessed by using the CCP double stack knob.

The fault messages page displays the fault messages, ATA chapter, date and time of occurrence. When viewing a historical fault message entry, the flight leg is also displayed.

The OMS stores fault messages for up to 65 flight legs with a maximum of 40 fault messages per flight leg. This storage limit is shared between fault messages and service messages. Once the maximum number of fault or service messages has been stored for a single flight leg, subsequent messages are no longer recorded for that flight.

Fault Message Summary Page

Selecting a fault message displays a Fault Message Summary page with the following information:

- Fault message
- ATA
- Date and time of first occurrence (subsequent occurrences increment a number counter only)
- Number of occurrences
- List of possible causes
- HELP tab
- MSG DATA tab
- LRU DATA tab
- FDE tab

The flight phase and flight leg number information are also shown for historical fault messages.

HELP Tab

The HELP tab is displayed by default. It provides troubleshooting guidance information for the corresponding fault message, including the applicable fault isolation manual (FIM) task.

MSG DATA Tab

The MSG DATA tab displays the specific maintenance data used to trigger the fault message. Data are shown with bits for ARINC labels or bytes for Ethernet network data object (NDO) format.

LRU DATA Tab

The LRU DATA tab displays all labels and NDO data used to monitor the selected LRU.

Displayed data are not shown in real time. A Refresh soft key updates the data. Each NDO/label entry may be expanded or collapsed.

FDE Tab

The FDE tab shows the related flight deck effect. The Flight Deck Effect Summary page can be accessed by selecting the FDE message.

Copyright © Bombardier Inc.

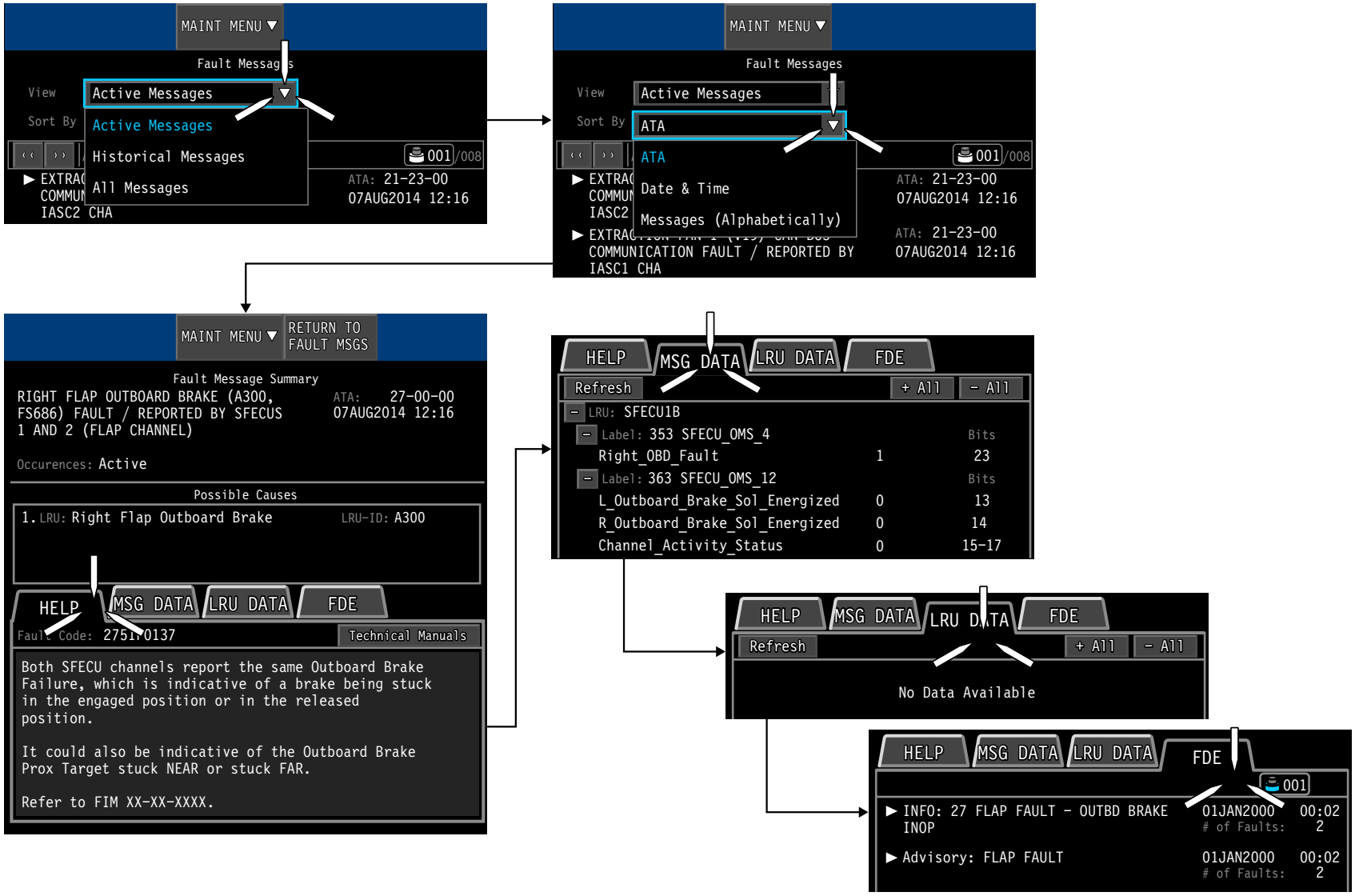

Figure 33: Fault Messages Page

Service Messages

The Service Messages page displays current and historical service messages logged in the OMS. They indicate that a periodic maintenance action must be performed soon.

A list of service messages are displayed on the main page. The View options, Sort By options, and messages list display is the same as the fault messages.

Service Message Summary

Selecting a service message displays a Service Message Summary page, providing access to additional details including:

- Service message
- ATA
- Date and time of first occurrence (subsequent occurrences increment number counter only)
- Number of occurrences
- Possible causes
- HELP tab
- MSG DATA tab
- LRU DATA tab

The flight phase and flight leg number information are also shown for historical service messages.

HELP Tab

The HELP tab is displayed by default. It provides guidance information for the corresponding service message, including the applicable fault isolation manual (FIM) task.

MSG DATA Tab

The MSG DATA tab displays the specific maintenance data used to trigger the service message. Data are shown with bits for ARINC labels or bytes for Ethernet network data object (NDO) format.

LRU DATA Tab

The LRU DATA tab displays all labels and NDO data used to monitor the selected LRU.

Displayed data are not shown in real time. A Refresh soft key updates the data. Each NDO/label entry may be expanded or collapsed.

Copyright © Bombardier Inc.

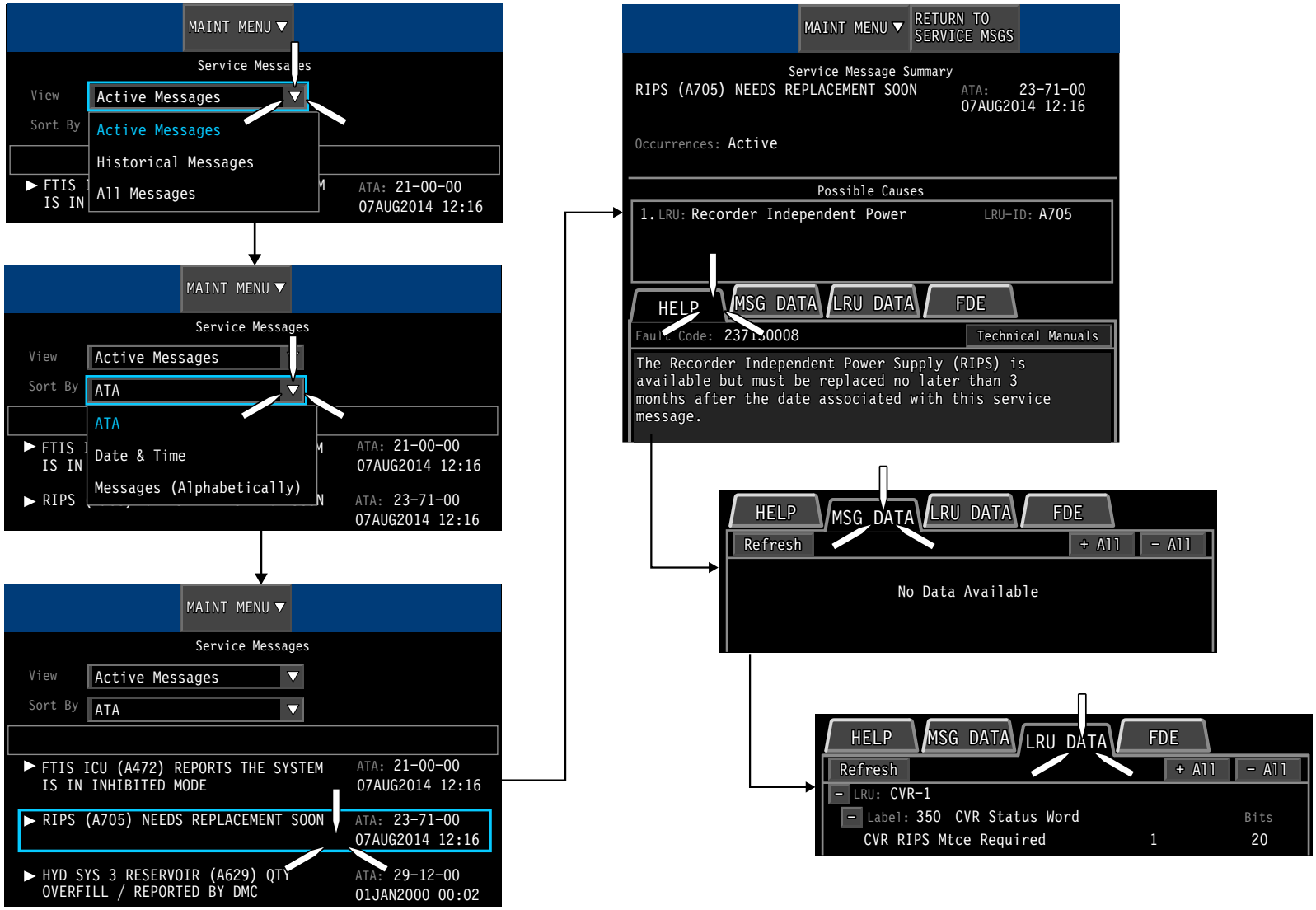

Figure 34: Service Messages Page

LRU/System Operations Page

The LRU/System Operations page provides access to a variety of interactive procedures related to an LRU or system.

Three drop-down menus provide access to several combinations of LRUs and systems displayed.

The View drop-down menu provides six selections to view the system LRUs:

- All ATAs
- Configurable LRUs
- Real-time Data LRUs
- Riggable LRUs
- Testable LRUs
- NVM Download LRUs

Selecting a view provides access to its associated list in the Select ATA drop-down menu.

The Select LRU/System drop-down menu displays a selection of LRUs or systems based on the selected ATA number, as well as the View drop-down menu selection.

Copyright © Bombardier Inc.

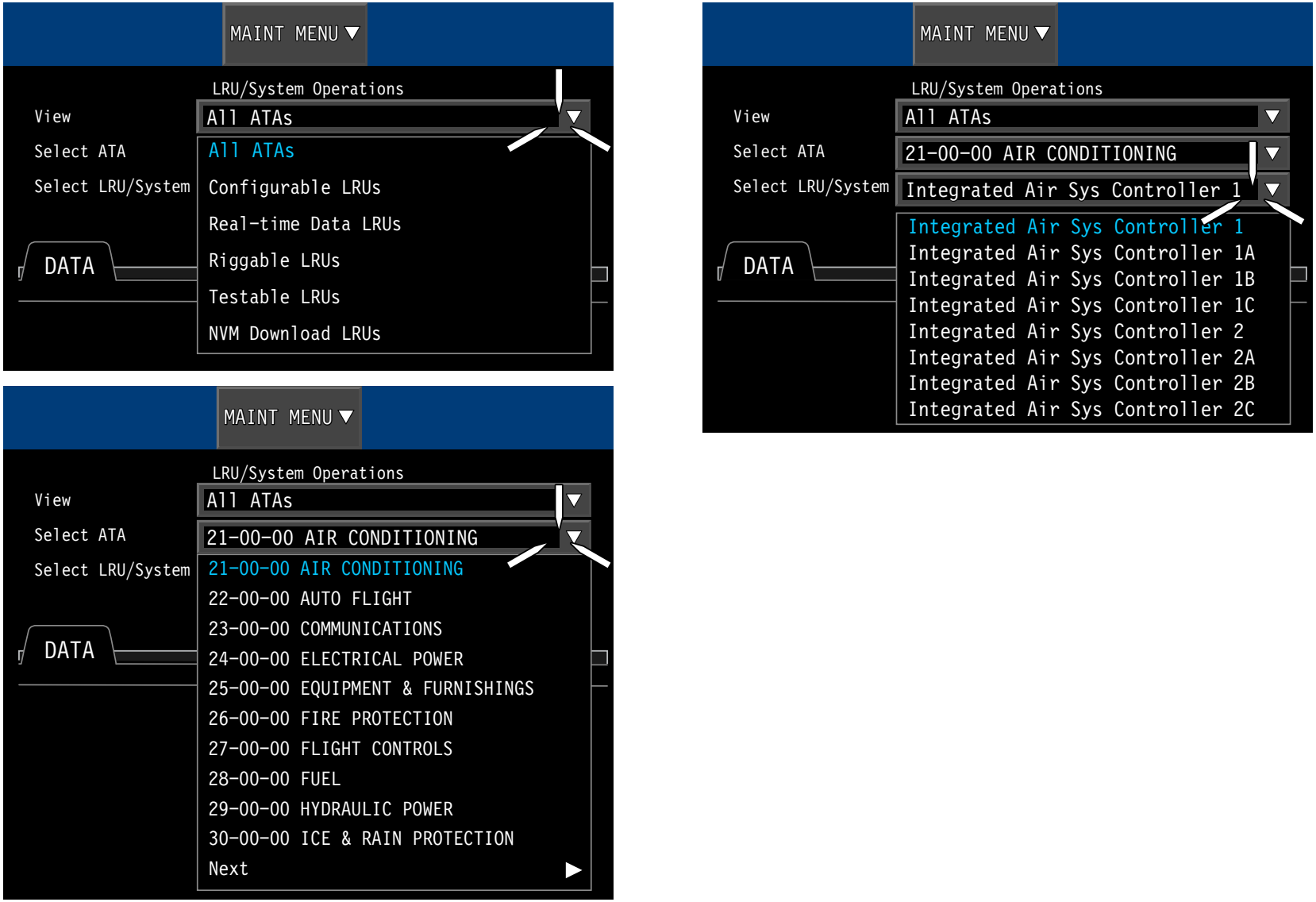

CS1_CS3_4500_071

Figure 35: LRU/System Operations Page

LRU/System Operations Tab

The LRU/System Operations page provides the following tabs:

- CONFIG
- DATA
- RIGGING
- TEST
- NVM

Tabs remain hidden if the LRU does not support the associated function. The CONFIG, RIGGING, TEST, and NVM functions are only available on the ground.

CONFIG Tab

The CONFIG tab identifies the configuration data associated with each selected LRU.

DATA Tab

The DATA tab provides access to all applicable labels, NDOs, text reports, operational status, and real-time data parameters for the LRU/system.

RIGGING Tab

The RIGGING tab lists rigging procedures for the selected LRU. Selecting a procedure provides instructions, warnings, and prerequisite conditions for each rigging procedure. The procedure can be aborted at any time. At the conclusion of the rigging, the OMS displays the pass/fail information as indicated by the LRU.

The following three selections are available:

- Continue, to start the rigging procedures
- Write Maintenance Reports, to transfer the rigging data to any of the peripheral devices through the maintenance report menu
- Cancel, to abort the initiated rigging and return the operator to the LRU/System Operations format within the previously selected tab

TEST Tab

The TEST tab lists testing procedures for the selected LRU. Selecting a test provides instructions, warnings, and prerequisite conditions for each testing procedure. The test can be aborted at any time. At the conclusion of the procedure, the OMS displays the pass/fail information as indicated by the LRU.

The following three selections are available:

- Continue, to start the test procedures
- Write Maintenance Reports, to transfer the test data to any of the peripheral devices through the maintenance report menu
- Cancel, to abort the initiated test and return the operator to the LRU/System Operations format within the previously selected tab

NVM Tab

The NVM tab provides access to download data from the NVM of the LRU. NVM data cannot be read onboard through the OMS. The data is saved to a USB data storage device through the OMS or printed on the optional printer.

Selecting the Start soft key writes the NVM data of the selected LRU to the USB media. A message is displayed once the writing is completed.

Selecting the Clear NVM soft key opens a dialog box to confirm the execution of erasing the LRU internal fault memory. Selecting Yes erases all of the NVM data. A message is displayed to confirm completion.

Copyright © Bombardier Inc.

Figure 36: LRU/System Operations Tabs

System Configuration Page

The integrated modular avionics (IMAs) concept allows software to be installed in any one of the common computing modules (CCMs) rather than being installed in a dedicated LRU or LRM. An aircraft personality module (APM) is used to store software information unique to each individual aircraft, including the location of installed software.

The System Configuration page provides access to the IMA to view a list of all installed IMA software, APM configuration, electronic technical standard order (TSO) nameplates, and other data.

Additionally, it is used to verify that the correct software is installed on the aircraft and to ensure that both APMs contain matching data.

Selecting system configuration via MAINT MENU on the menu bar, or from the view system configuration item in the maintenance main menu list, provides access to this page.

A drop-down menu labeled View provides access to the following entries in the order listed below:

- IMA Software Part Numbers
- APM Configuration Option Partition
- APM Third Party Parameters Partition

The default selection is IMA Software Part Numbers.

System Configuration – IMA Software Part Numbers

Selecting the IMA Software Part Numbers displays a list of all media set with their associated application or table installed. Data is provided to the OMS by the configuration managers from both IPCs.

The information is presented listing the media set-type numbers alphabetically and then it is further sorted by position. The third column displays the Collins part number currently installed in its associated media set. Data line displayed in white indicates that the equipment-type media set is properly configured within the IMA.

If the configuration manager application determines that an installed media set is not appropriate for the equipment, its record is displayed in yellow font and the Collins part number (CPN) column displays dashes.

Part Number Crosscheck Details

Selecting an incorrectly configured media set in the IMA Software Part Numbers list displays the Part Numbers Crosscheck Details dialog box for the selected entry.

When a misconfigure is detected, a CONFIG INVALID caution CAS message is displayed. The dialog box shows which cabinet/slot location is misconfigured either due to the wrong hardware or software installed.

If it is the wrong hardware, the correct hardware part number must be installed. The correct software can be reloaded, using the load new / misconfigured LRU function of the onboard data loader.

The dialog box displays one entry for each loadable software component contained within the relevant media set. The entry of each loadable software component displays the following information:

- System ID number and its cabinet/slot location
- Hardware part number stored in the APM
- Software part number and CRC stored in the APM
- Hardware part number installed in this cabinet/slot location
- Software part number and CRC installed in this cabinet/slot location
- Status of whether the installed hardware and software for this cabinet/slot location matches the values stored in the APM

Status shows Correct if the installed part numbers match the values stored in the APM, MISCOMPARE if one or more of the installed part numbers do not match the values stored in the APM, and Unknown if the installed part numbers and CRC are not available.

Selecting the X soft key closes the Part Number Crosscheck Details dialog box.

Copyright © Bombardier Inc.

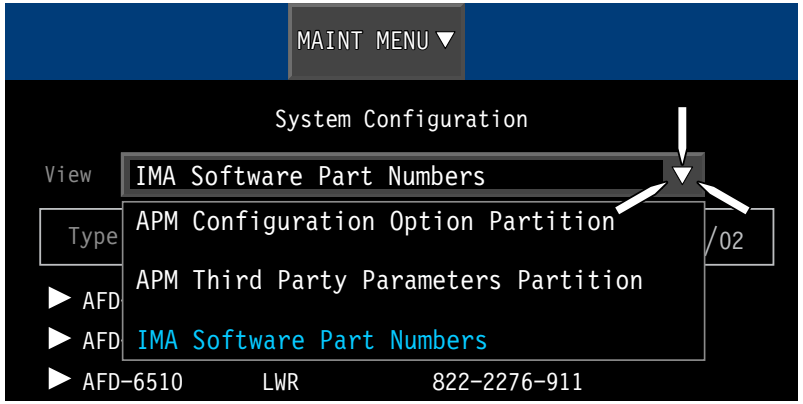

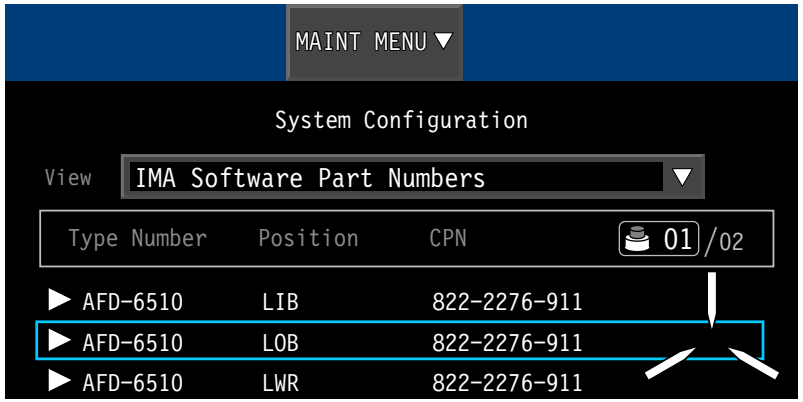

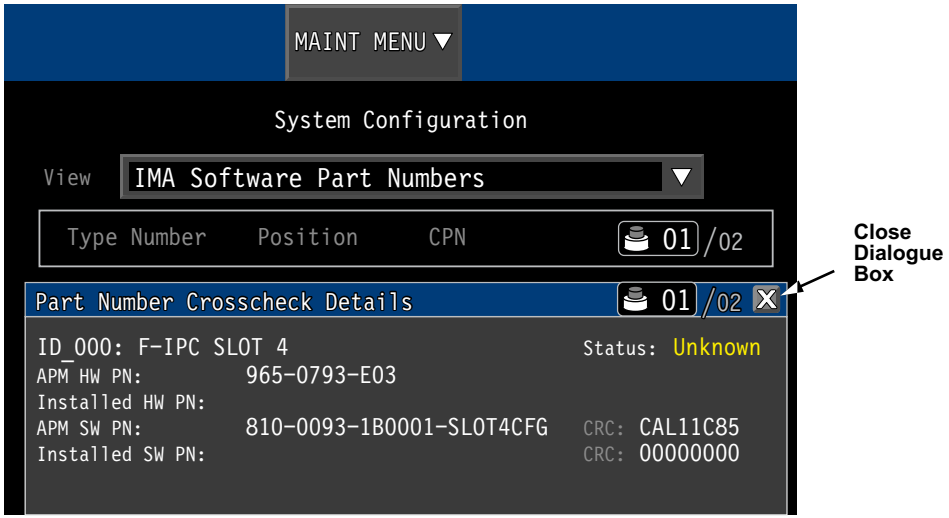

CS1_CS3_4500_064

Figure 37: System Configuration – IMA Software Part Numbers and Part Number Crosscheck Details

Copyright © Bombardier Inc.
CS130-21.02-06.00-121418

Electronic TSO Nameplate

Selecting an entry with a correctly configured media set displays a dialog box of its electronic TSO nameplate.

TSO refers to technical standard order, which is a minimum performance standard issued by the authorities for specified materials, parts, processes, or appliances used on the aircraft. Articles with TSO design approval are eligible for use on the approved-type certificated products.

Although the OMS has no control over the content of the text, TSO nameplates normally include the following data:

- Media-set-type number
- Collins part number (CPN)
- Release date of the software
- Manufacturer and its location
- TSO and software certification standard DO-178B levels, associated with the subsystem software included under this part number

If an incorrectly configured media set is installed, the IMA software part numbers list displays the Part Number Crosscheck Details dialog box for the selected entry.

When a misconfiguration is detected, a CONFIG INVALID caution message (ATA 31) is displayed. Accessing the dialog box allows the operator to determine which cabinet/slot location is misconfigured and whether it is due to the wrong hardware or software being installed.

If it is the wrong hardware, the correct hardware part number must be installed in its associated location. If it is the wrong software, the correct software should be reloaded, using the load new/misconfigured LRU feature of the onboard data loader.

Copyright © Bombardier Inc.

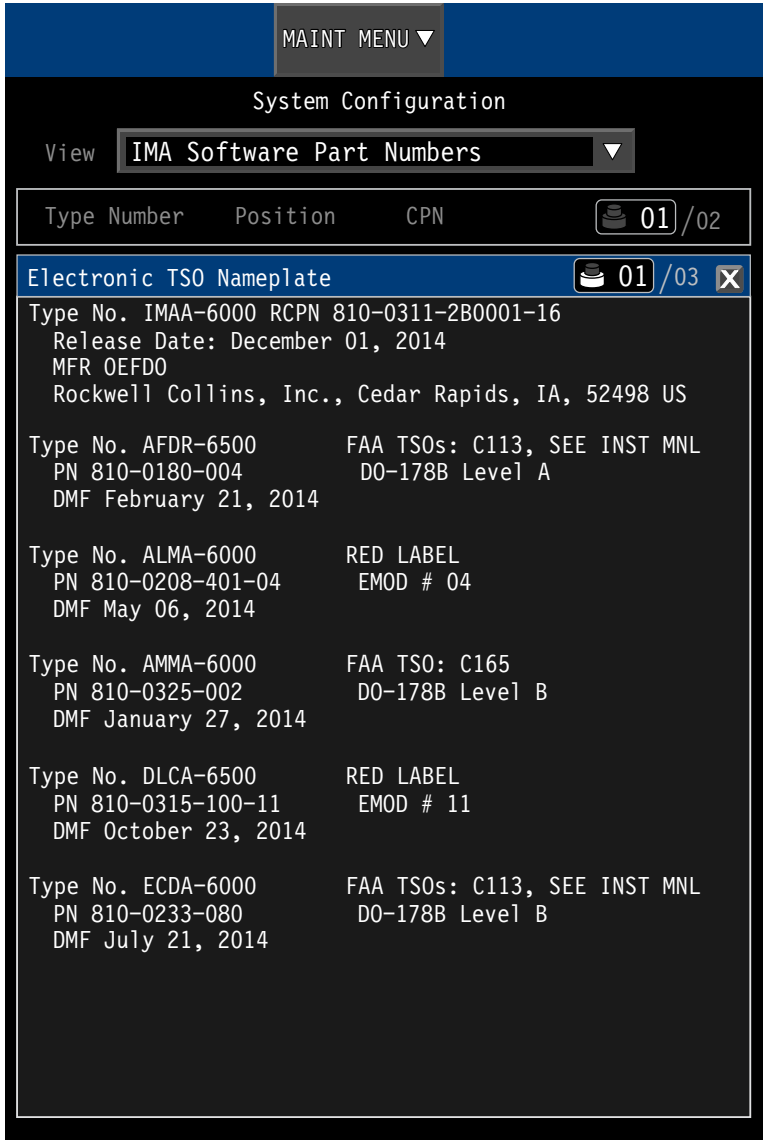

CS1_CS3_4500_086

Figure 38: System Configuration – Electronic TSO Nameplate Details

Copyright © Bombardier Inc.

System Configuration – APM Configuration Option Partition

Selecting the APM Configuration Option Partition displays a list of APM configuration options along with a status indication that identifies the current state of each setting as computed by the left and right APMs.

Each APM outputs a set of ARINC 429 words to the OMS in which configuration setting information appears. If the configuration setting information sent by the left APM does not match the data sent by the right APM, the OMS provides an indication that a mismatch exists.

The list displays the binary value of bits 9-24 and provides a miscompare indication, along with an APM MISCOMPARE caution message (ATA 31), if the left and right words do not match. If a word is not available, the binary value is displayed as dashes.

APM Word Details

Selecting APM Word displays a dialog box with a detailed list view of the APM options that are contained within that word. The following information is provided for each configuration option:

- Bit(s) in the word that contain the status of the configuration option
- Description of the configuration option
- Status of the configuration option for both left and right APMs as a text string representation of the binary value

The values of the configuration options for that word are displayed as dashes if an APM word is not available or if the option word is not received by the OMS. Values for both APMs are not displayed if the description is displayed in gray font to indicate that the option is either not present, disabled, inhibited, or false.

If the status values from the left and right APMs do not match, the configuration option entry is highlighted in yellow to indicate a mismatch.

Selecting the X soft key closes the APM Word dialog box.

Copyright © Bombardier Inc.

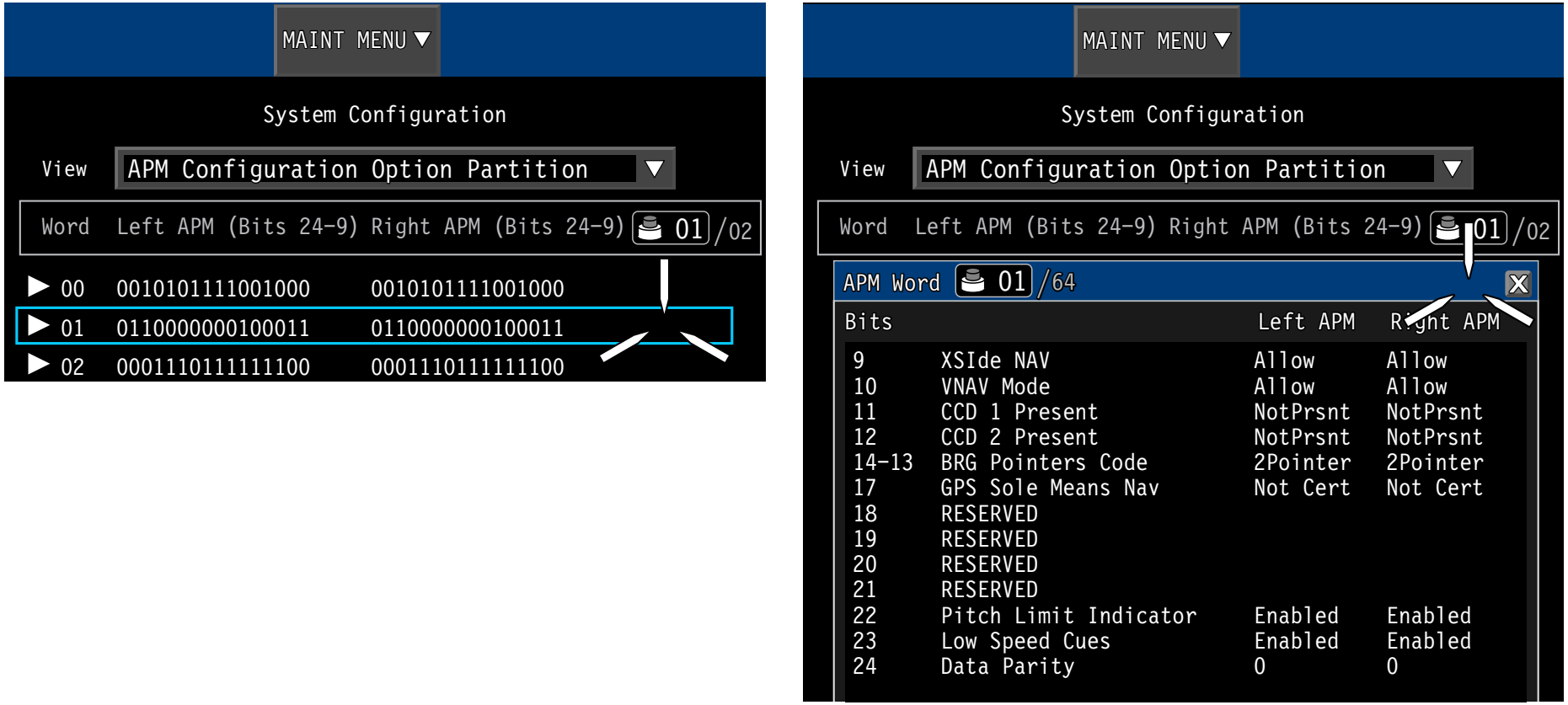

Figure 39: System Configuration – APM Configuration Option Partition

System Configuration – APM Third Party Parameters Partition

Selecting APM Third Party Parameters Partition displays a list of parameters along with a status/value indication that identifies the current state of each parameter as computed by the left and right APMs.

The values display dashes if its option word is not received by the OMS from the left or right APM. An entry is displayed in yellow along with an APM MISCOMPARE caution CAS message if the OMS provides an indication that a mismatch exists between the left and right APMs.

Copyright © Bombardier Inc.

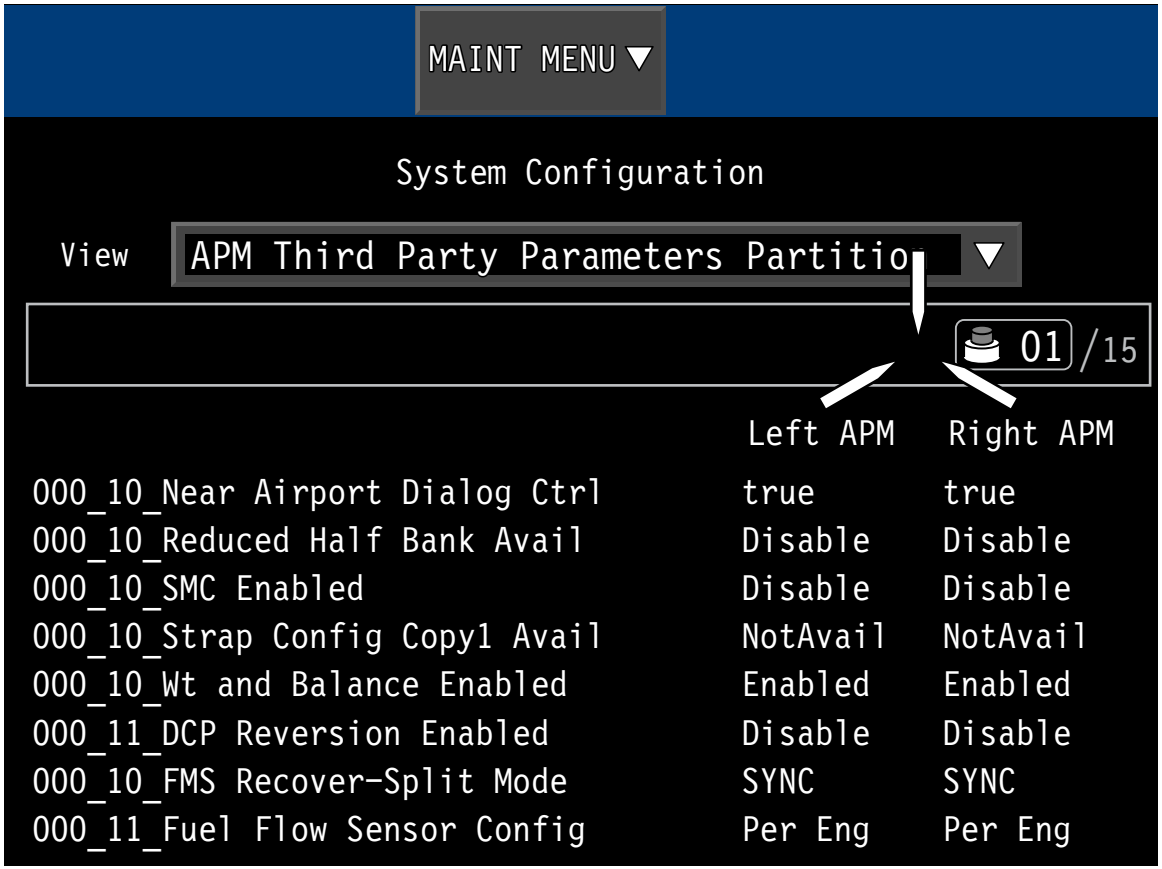

CS1_CS3_4500_066

Figure 40: System Configuration Page

Copyright © Bombardier Inc.
CS130-21.02-06.00-121418

Maintenance Reports Page

The Maintenance Reports page provides a Report Type drop-down menu. The menu provides the following selections that control the type of maintenance reports that are written:

- PFS Condensed (txt)
- PFS Condensed (xml)
- PFS (txt)
- Servicing (xml)
- FDE (xml)
- Fault Messages (xml)
- Service Messages (xml)
- LRU Config Report (txt)
- All Reports
- Exceedences Left Engine (txt)
- Exceedences Right Engine (txt)
- PFS (xml)
- Servicing (txt))
- Fault Messages (txt))
- Fault Messages Condensed (txt))
- FDE Condensed (xml)
- FDE (txt)
- Service Messages (txt)
- Service Messages Condensed (txt)
- System Configuration (txt)
- System Parameters (txt)
- System Strapping Data (txt)

Copyright © Bombardier Inc.

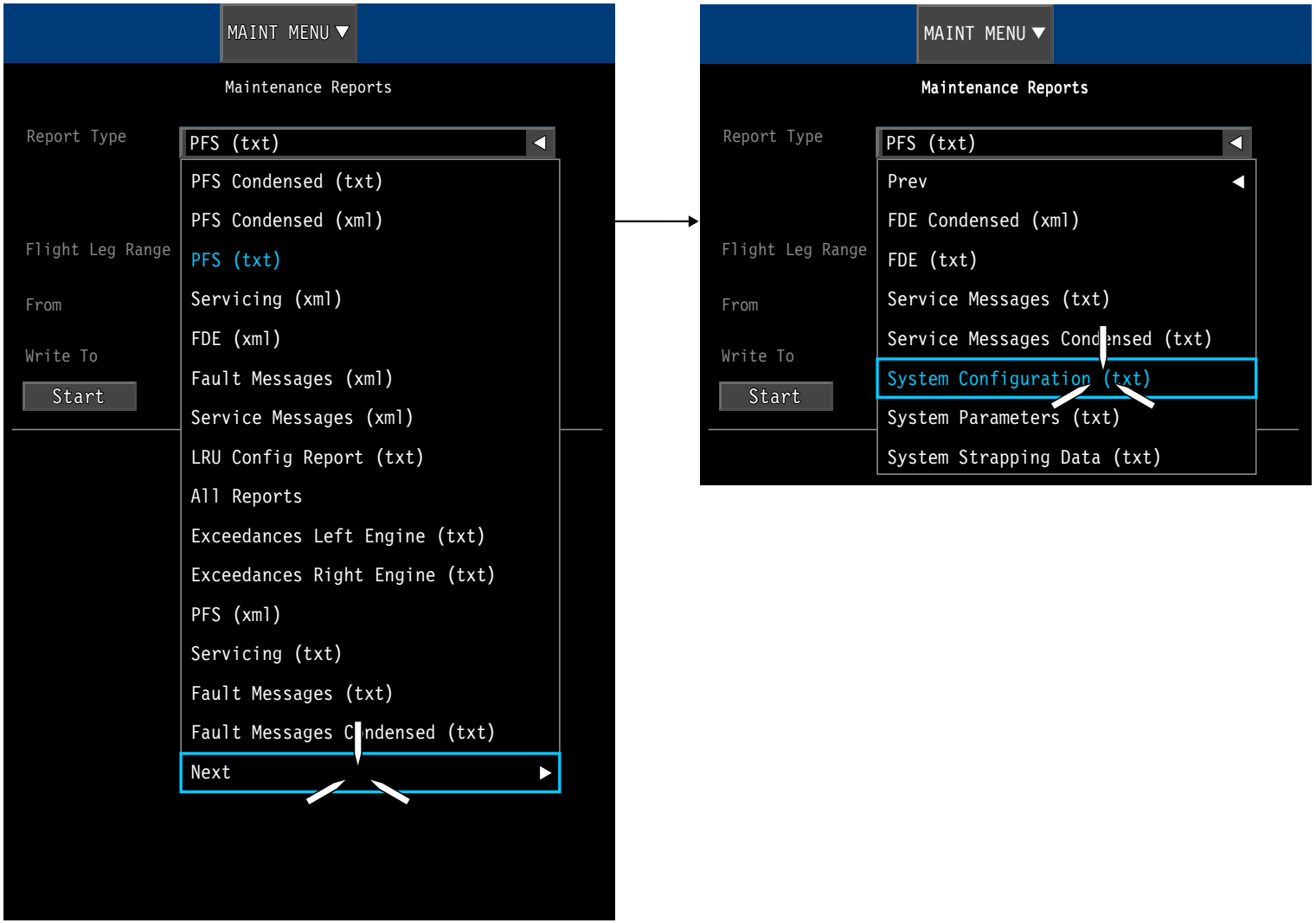

CS1_CS3_4500_124

Figure 41: Maintenance Reports Page

Maintenance Reports Page Report Type and Write To Options

The Flight Leg Range menu provides the following selections:

- All Fight Legs
- All Flight Legs Since Last Written
- Current Flight Leg

The last flight leg and date since the report was last written are displayed, if available, between the report type and flight leg range menus.

The following report types do not support flight leg history and selecting one of them writes the data for the current flight leg only:

- Life cycle data
- System parameters
- System configuration data
- LRU diagnostic data

The following destinations, where reports can be written, can be selected from the Write To menu:

- Cockpit Printer
- IMS USB
- DATALINK
- IMS HMU

Selecting the Start soft key initiates the report writing process. Progress indicators are displayed to indicate the completion percentage of the current report.

The white Write In Progress status is replaced with a green Write Complete when the maintenance report is successfully written.

If the Cancel soft key is selected, the attempt to write the selected report is abandoned and the Maintenance Reports page returns to its default configuration.

Copyright © Bombardier Inc.

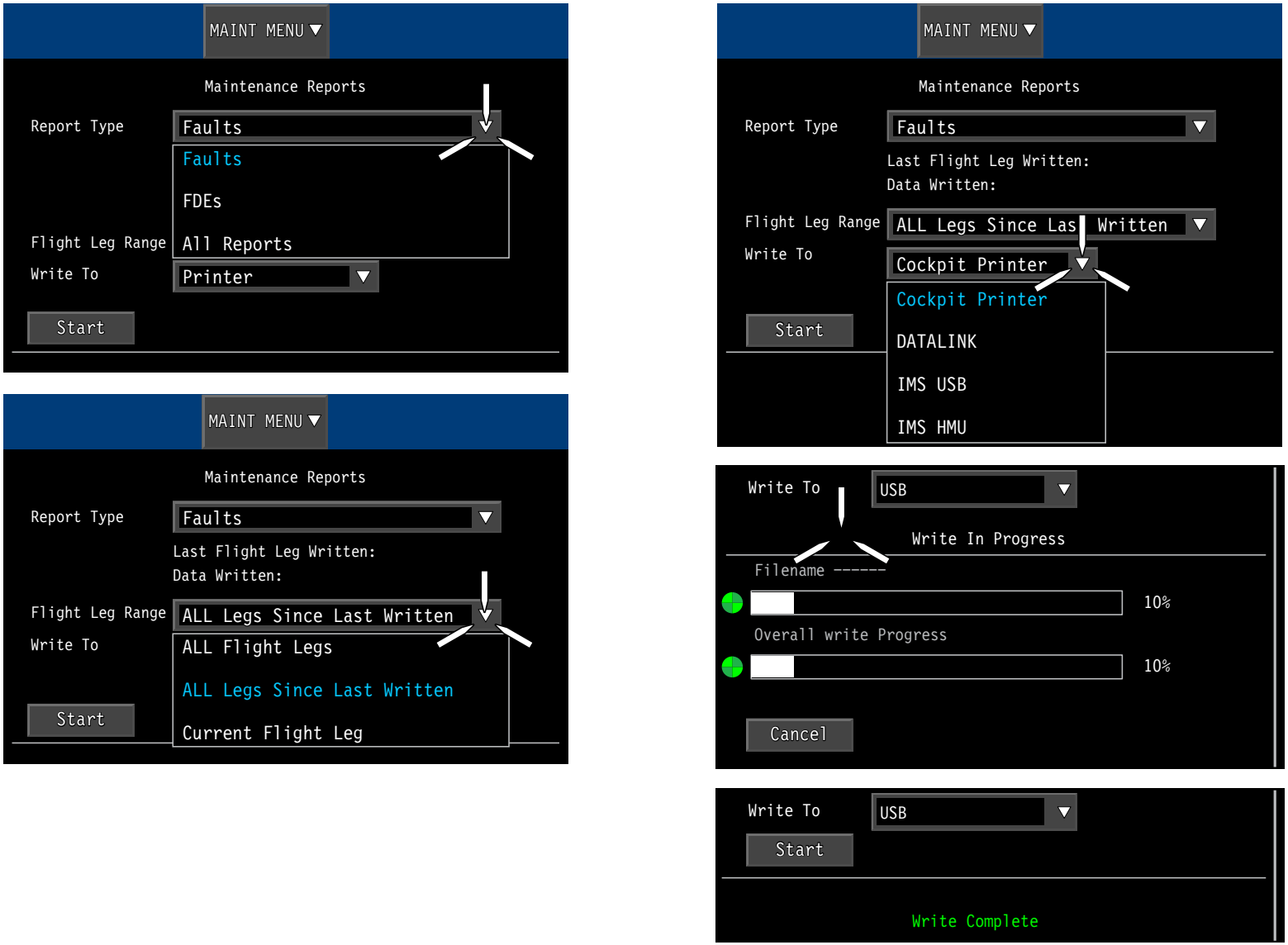

CS1_CS3_4500_063

Figure 42: Maintenance Reports Page Report Type and Write To Options

Utility Functions

The Utility Functions Password page is used to modify the maintenance data stored within the OMS. The page is protected by a password to prevent unintentional modification of stored data.

The password used to access the utility functions page is MAINT.

The Utility Functions Menu provides access to the following selections:

- Modify Maintenance Data
  - Change Aircraft Tail Number
  - Change Aircraft Life Cycle Data
  - Change Automatically Initiated Reports
  - Change Aircraft SELCAL Code
  - Change Maintenance Flight Leg
  - Change Report Configuration
- Manage Maintenance Data/Files
  - Delete Stored Maintenance Data
  - Delete Maintenance Files
  - View Loaded Maintenance Files

There are two check boxes used to override functions configured within the onboard maintenance system table (OMST):

- Disable Automatically Initiated Reports
- Disable Fault Logging While On Ground

The OMS disables the automatic data link reports function if the Disable Automatically Initiated Reports is checked.

The OMS does not log any fault or service messages while the OMS is on the ground if the Disable Fault Logging While On Ground box is checked. This condition is reset as soon as the aircraft transitions to weight off wheels.

Copyright © Bombardier Inc.

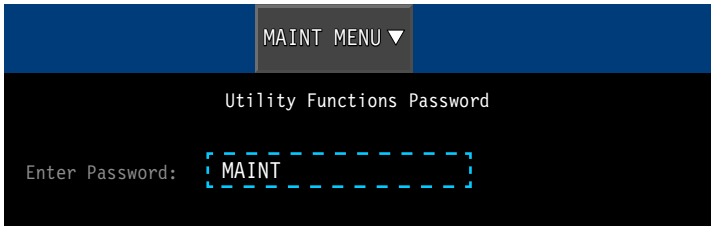

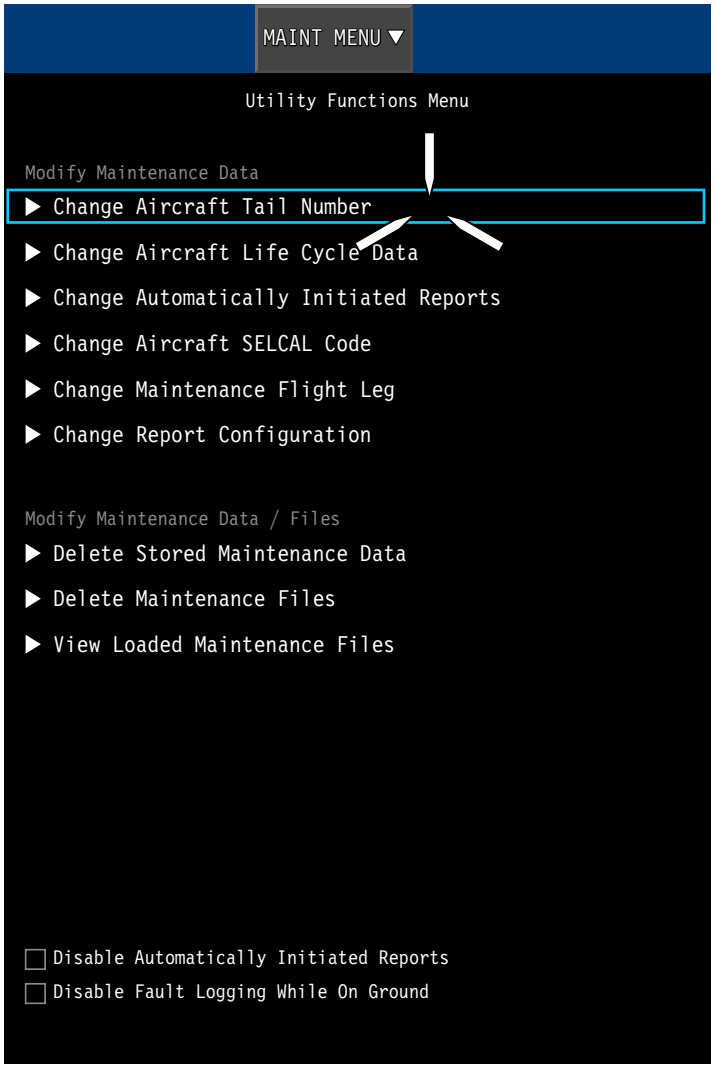

CS1_CS3_4500_079

Figure 43: Utility Functions Password and Utility Functions Menu Pages

Copyright © Bombardier Inc.
CS130-21.02-06.00-121418

Change Aircraft Tail Number

Selecting Change Aircraft Tail Number changes the aircraft tail number stored within the OMS. Changing the stored aircraft tail number deletes all stored maintenance data.

A Caution dialog box warns the operator that this action resets the OMS to its default state. A Write Maintenance Reports soft key is used to save the data that will be deleted prior to changing the aircraft tail number.

When the process is successful, a green CHANGE TAIL NUMBER COMPLETE indication is displayed to the user.

Copyright © Bombardier Inc.

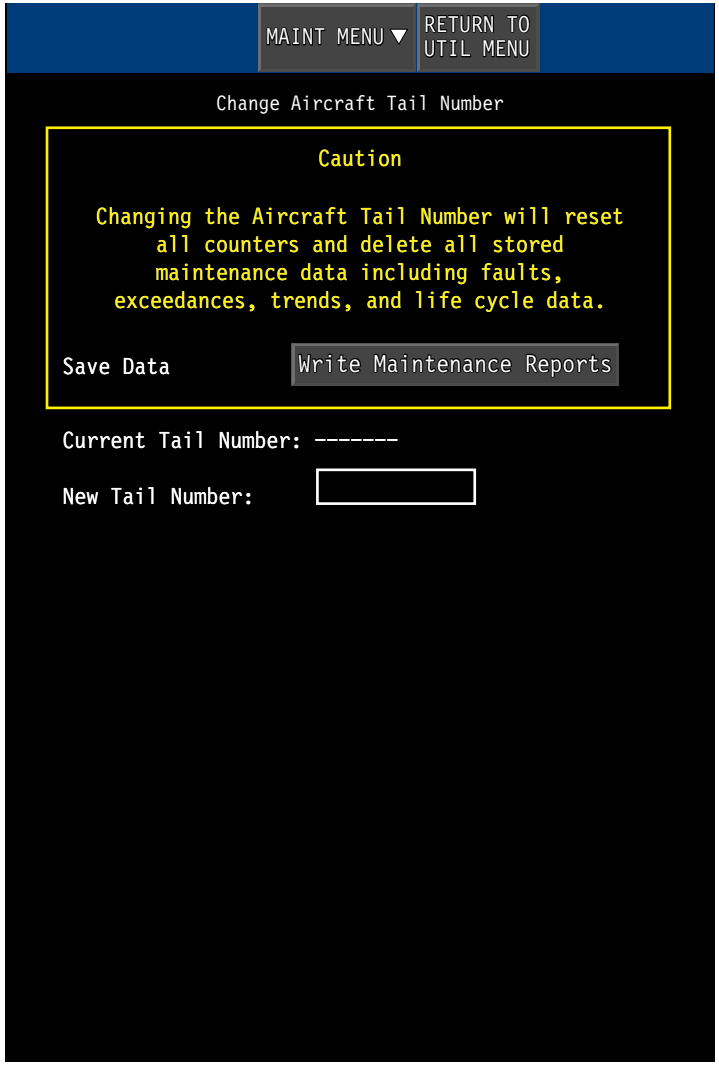

CS1_CS3_4500_080

Figure 44: Change Aircraft Tail Number

Change Automatically Initiated Reports Page

The Change Automatically Initiated Reports page function allows the operator to enable or disable automatically-triggered reports to the multiple destinations allowed.

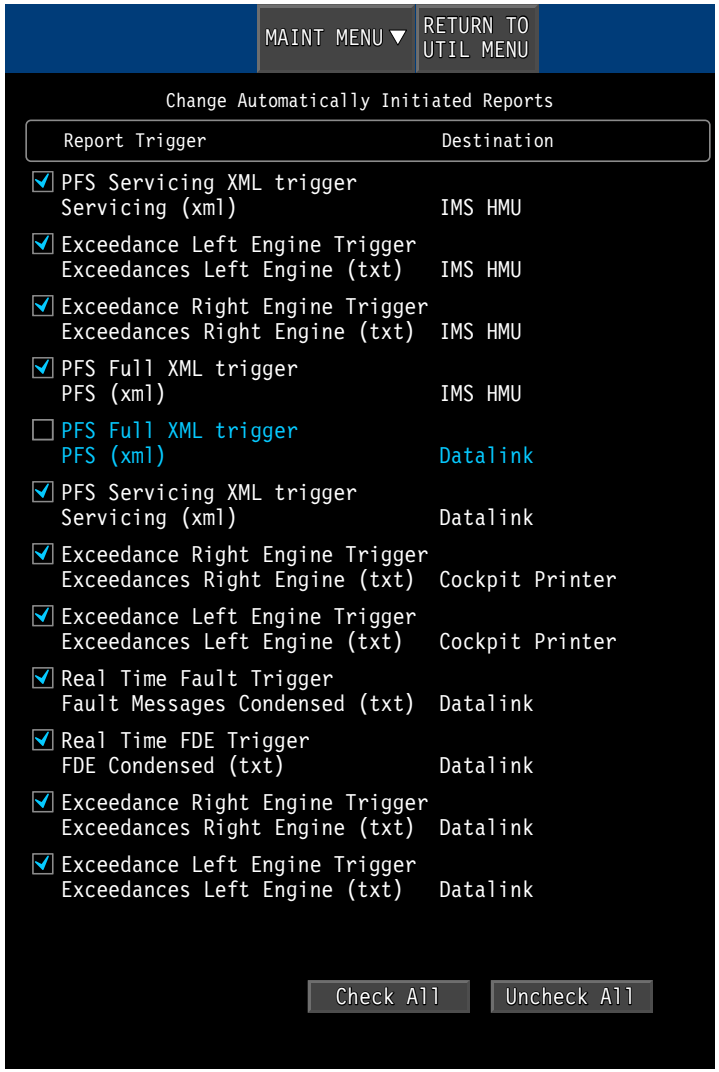

CS1_CS3_4500_081

Figure 45: Change Automatically Initiated Reports Page

Copyright © Bombardier Inc.
CS130-21.02-06.00-121418

Change Aircraft SELCAL Code Page

The Change Aircraft SELCAL Code page is used to change the selective calling (SELCAL) code stored in the radio interface units (RIUs).

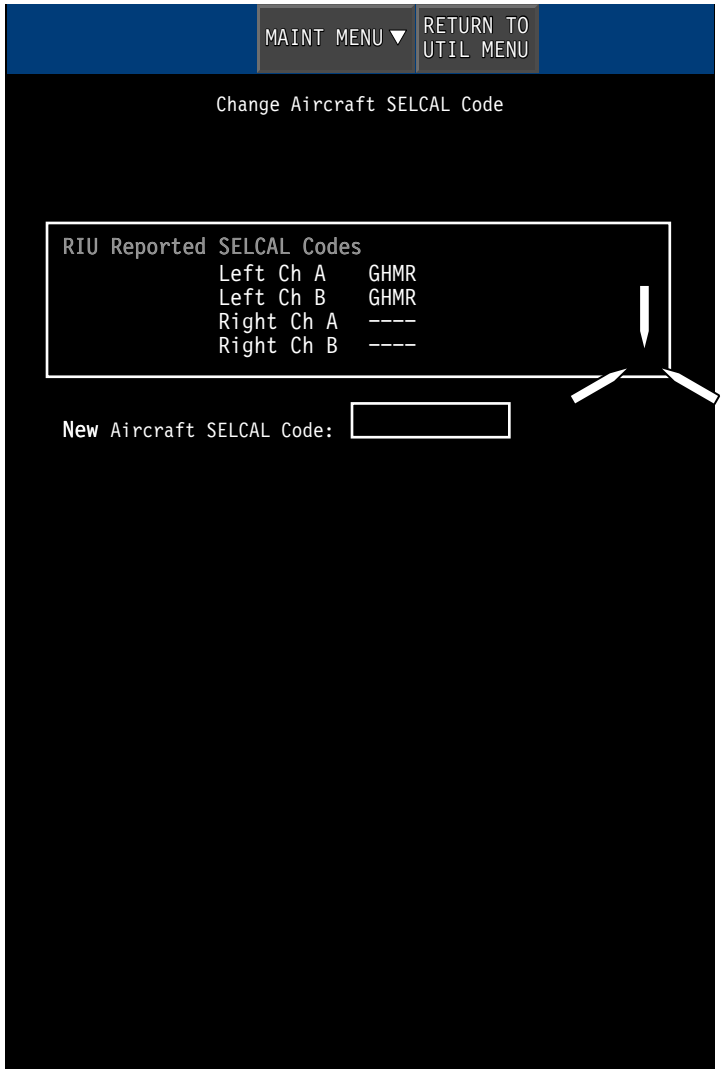

CS1_CS3_4500_082

Figure 46: Change Aircraft SELCAL Code Page

Change Maintenance Flight Leg Page

The Change Maintenance Flight Leg page allows the manual transition the aircraft into the maintenance flight leg state where the aircraft stays on the ground for maintenance work.

CS1_CS3_4500_094

Figure 47: Change Maintenance Flight Leg Page

Change Report Configuration Page

The Change Report Configuration page function enables or disables designated report sections. The Flexible Reports (Flex Reports) feature, which provides the basis for the PFS function, can be extended on this page.

When a report section is disabled, the Flex Reports will exclude that section and all of its child sections from the report generation. The section configurability is done on a per aircraft basis and is available via the onboard display manager application (DMA).

Copyright © Bombardier Inc.

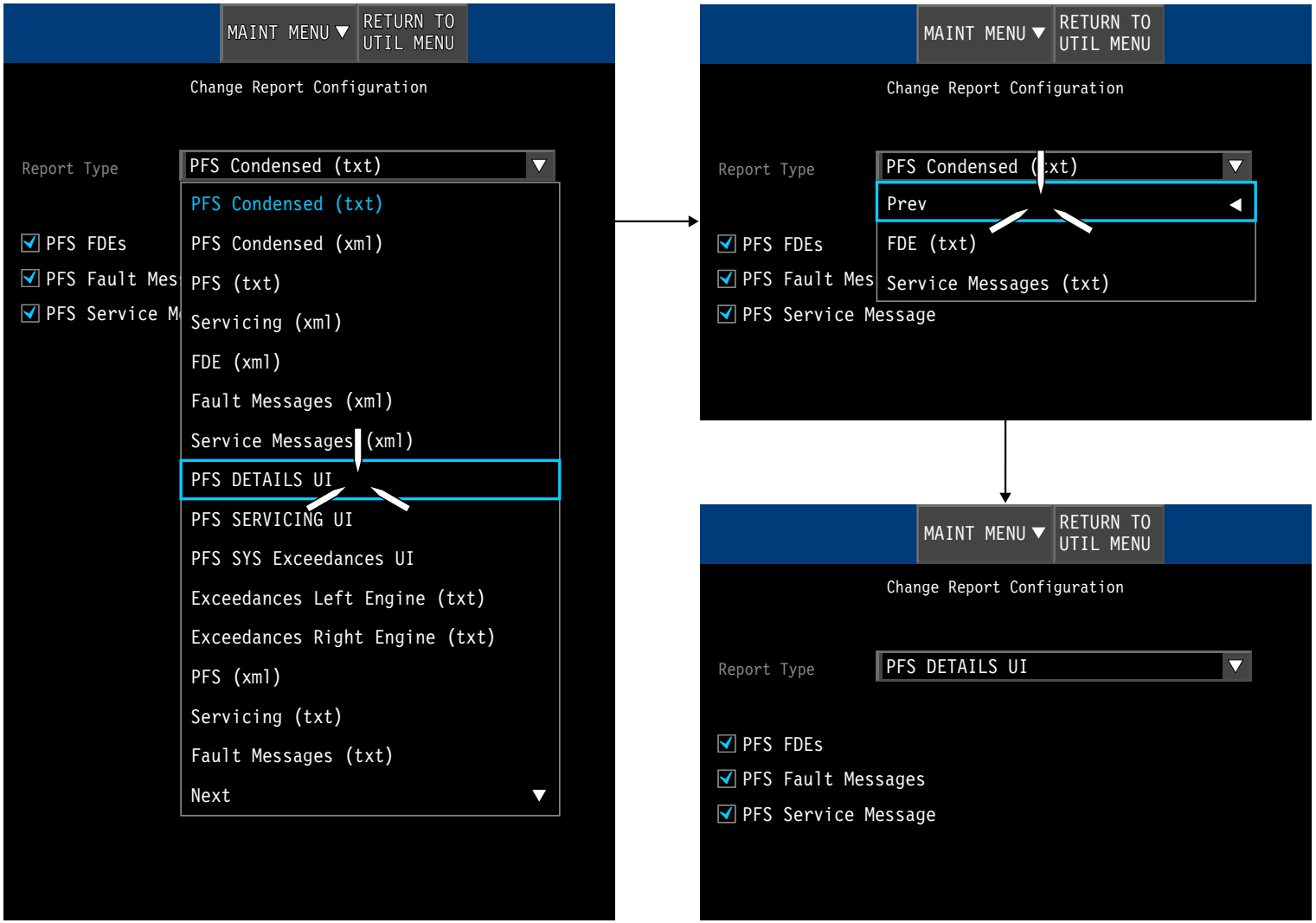

Figure 48: Change Report Configuration Page

Delete Stored Maintenance Data Page

The Delete Stored Maintenance Data page provides access to a list of all the historical maintenance data that can be deleted from the OMS. This list includes the following data:

- Fault Messages & FDEs
- Services Messages
- System Exceedances
- System Trends
- User ACMS Data
- Report Parameters

This function deletes all legs history. A soft key provides the opportunity to save the data, before deleting it, in a maintenance report.

A green Delete Complete indication is displayed when a deleting process is completed successfully.

Delete Maintenance Files

This function provides the capability to delete the maintenance files stored within the OMS. Maintenance files include test and rigging files and user ACM tables. When files are deleted, the associated functionality does not work until a new set of maintenances files of the same type are loaded.

A green Delete Complete indication is displayed when a deleting process is completed successfully.

Copyright © Bombardier Inc.

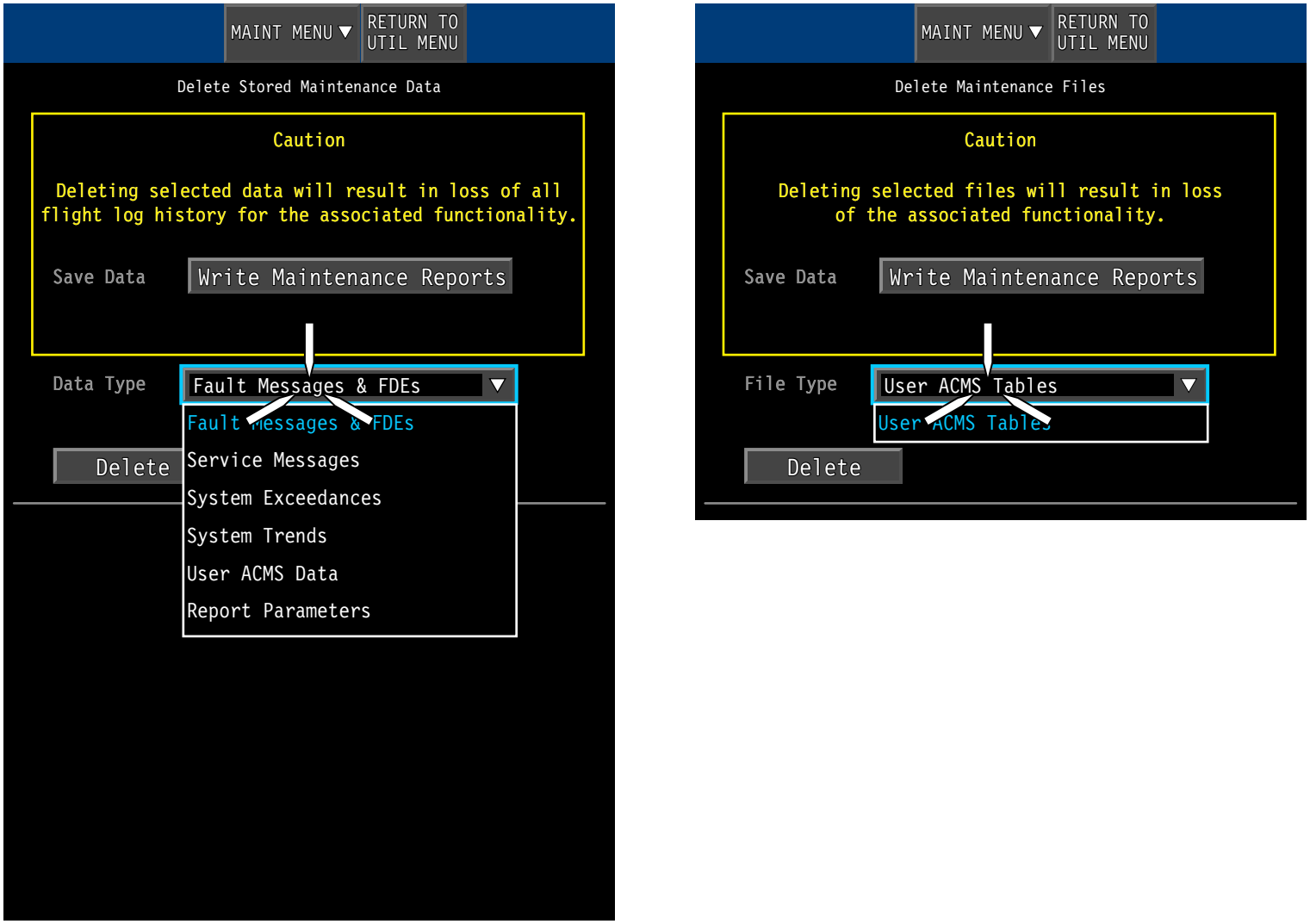

CS1_CS3_4500_083

Figure 49: Delete Stored Maintenance Data and Delete Maintenance Files Pages

View Loaded Maintenance Files Pages

The View Loaded Maintenance Files page provides selections to view the files loaded in the OMST. Maintenance files include diagnostic tables, test and rigging files, and user ACMS tables. They provide the OMS with the test and rigging functionality and faults equation logic tables.

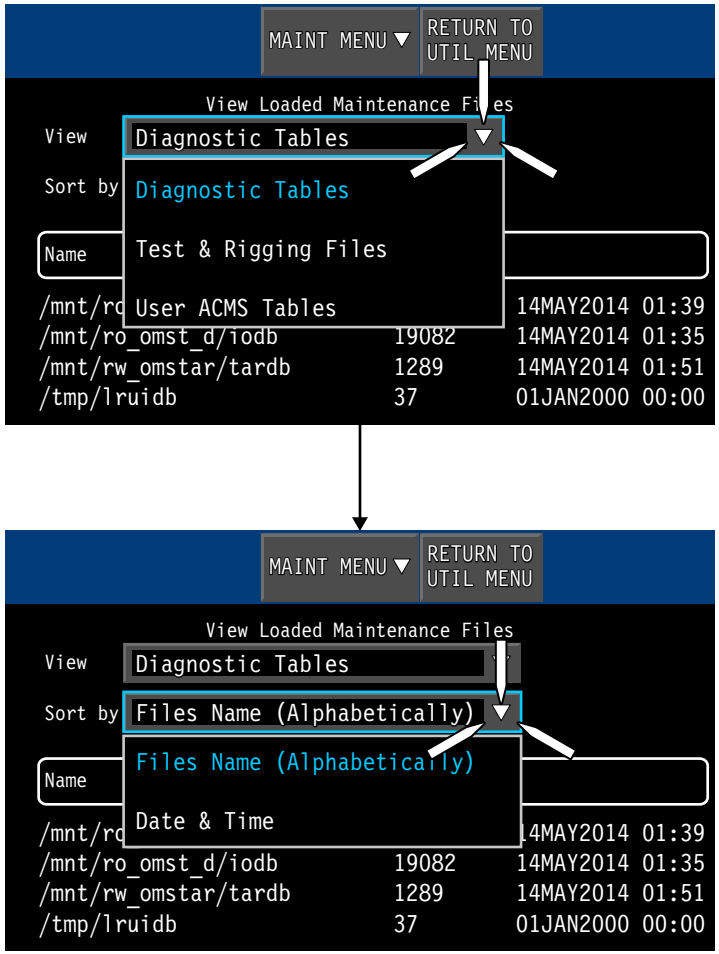

CS1_CS3_4500_084

Figure 50: View Loaded Maintenance Files Page

Page Intentionally Left Blank

ATA 46 - Information Systems

BD-500-1A10
BD-500-1A11

Table of Contents

46-15 Information Management System....46-2
General Description....46-2
Component Location....46-4
Component Information....46-6
IMS Unit....46-6
Controls and Indications....46-8
Operation....46-10
File Management....46-10
Upload Scenarios....46-12
Detailed Description....46-32
Data Load Process....46-32
Configuration Management....46-34
46-11 Aircraft Health Management System....46-36
General Description....46-36
Component Location....46-38
Health Management Unit....46-38
Aircraft Network Switch....46-38
HMU Maintenance Panel....46-40
Component Information....46-42
Health Management Unit....46-42
Controls and Indications....46-44
Health Reports....46-44
High Load Event Indication Function....46-46
Detailed Description....46-48
High Load Event Indication Function....46-48
Usage-Based Monitoring Function....46-48
Aircraft Data Recording Function....46-48
Aircraft Condition Monitoring Function....46-48
Aircraft Data Management Function....46-48
Aircraft Data Exchange Function....46-48
Wireless Connectivity....46-48
Aircraft Network Switch....46-50
Monitoring and Tests....46-52
CAS Messages....46-53
Practical Aspects....46-54
OMS Tests....46-54
High Load Event Advisory Reset....46-56

Copyright © Bombardier Inc.

List of Figures

Figure 1: Information Management System Schematic.....46-3
Figure 2: Information Management System Location.....46-5
Figure 3: IMS Unit.....46-7
Figure 4: IMS Controls and Indications 46-9
Figure 5: File Management.....46-11
Figure 6: Upload Scenarios 46-13
Figure 7: Database Upload Setup 46-15
Figure 8: New Database Upload 46-17
Figure 9: Documents and Tables Upload 46-19
Figure 10: Database, Document, or Table Verification.....46-21
Figure 11: Load New/Misconfigured LRU/LRM and Load Aircraft Software Set 46-23
Figure 12: File Details.....46-25
Figure 13: Reload Data and Software and Reload LRU 46-27
Figure 14: Software Configuration Verification 46-29
Figure 15: Software Configuration Verification 46-31
Figure 16: Data Load Process.....46-33
Figure 17: Configuration Management 46-35
Figure 18: Aircraft Health Management System.....46-37
Figure 19: Health Management System Component Location 46-39
Figure 20: HMU Maintenance Panel 46-41
Figure 21: Health Management Unit.....46-43
Figure 22: Health Report Pages 46-45
Figure 23: High Load Event Indication Function.....46-47
Figure 24: Aircraft Health Management System Functions 46-49
Figure 25: Aircraft Network Switch..... 46-51
Figure 26: OMS Tests..... 46-55
Figure 27: High Load Event Advisory Reset..... 46-57

Copyright © Bombardier Inc.

Page Intentionally Left Blank

Copyright © Bombardier Inc.

INFORMATION SYSTEMS - CHAPTER BREAKDOWN

Information Management System 1

Aircraft Health Management System 2

46-15 INFORMATION MANAGEMENT SYSTEM

GENERAL DESCRIPTION

The information management system (IMS) is part of the information system, and is responsible for the upload of field loadable software.

The process for uploading software involves the IMS, the HMU maintenance panel, configuration manager, and onboard maintenance system (OMS).

The IMS is the entry point for uploading data. The unit has a front panel that allows maintenance personnel to insert a universal serial bus (USB) memory stick containing the data and software to be uploaded. Software files are not transferred directly to the target components. Users need to copy the required files to the IMS internal hard drive for upload first.

The IMS also hosts the onboard data loader (ODL), which provides a simplified user interface for the upload process via a multifunction window (MFW), or a laptop.

To enable this process, the aircraft is required to be on the ground, the AIRCRAFT switch in the UPLOAD position, and the CHAN switch in the A or B position.

For targets connected on the avionics full duplex switched Ethernet (AFDX), the configuration manager inside the integrated processing system (IPS) compares installed application software and hardware with a configuration table stored on the aircraft personality module (APM). The configuration manager is accessible from the OMS.

If the reported configurations on the OMS match the expected configurations, they are displayed in white. If not, they appear in yellow, and a crew alerting system (CAS) message is displayed.

There is no automatic configuration process for targets on the ARINC 429. In this case, the configuration is confirmed manually on the OMS.

The IMS is powered by DC BUS 1.

Copyright © Bombardier Inc.

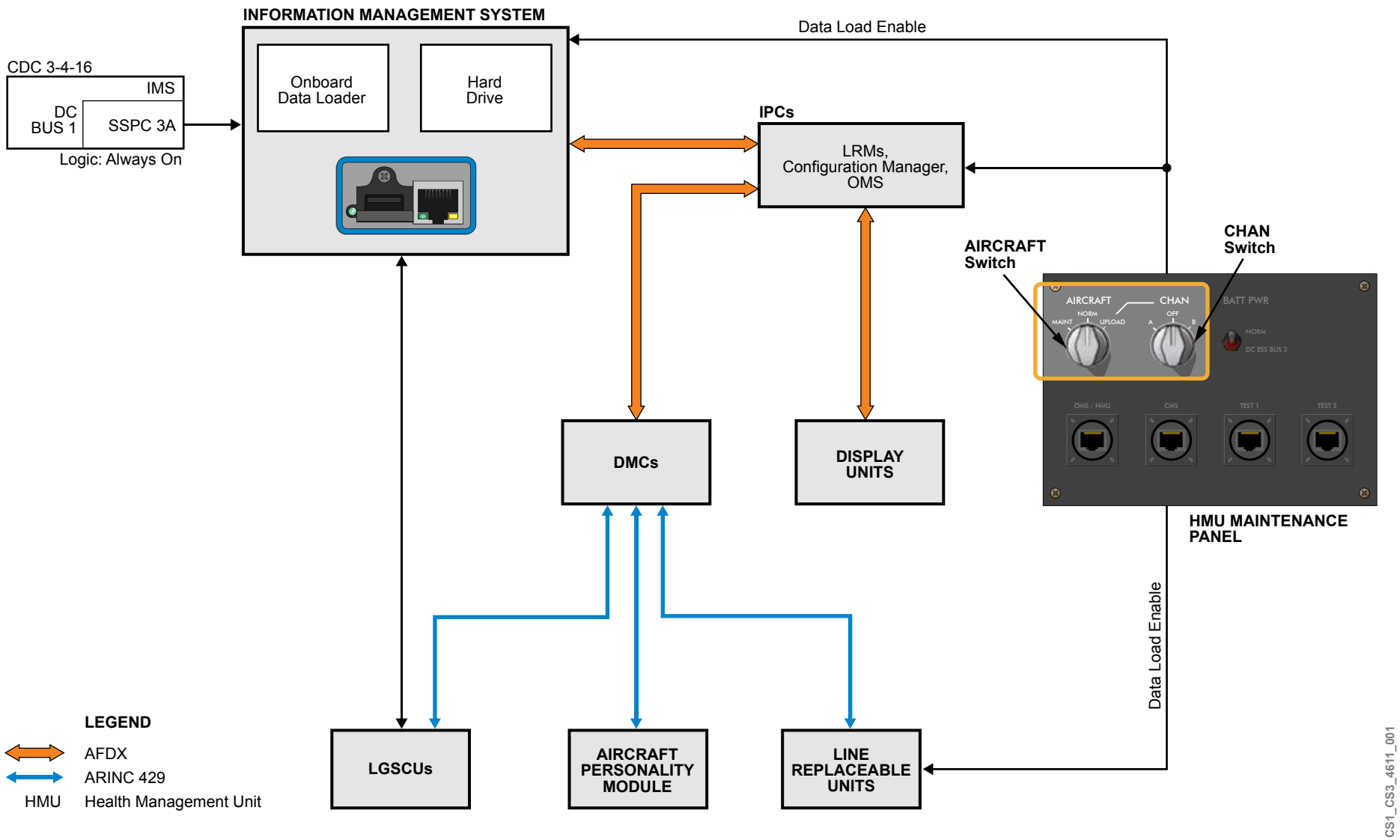

Figure 1: Information Management System Schematic

COMPONENT LOCATION

The information management system (IMS) is located in the aft left side console.

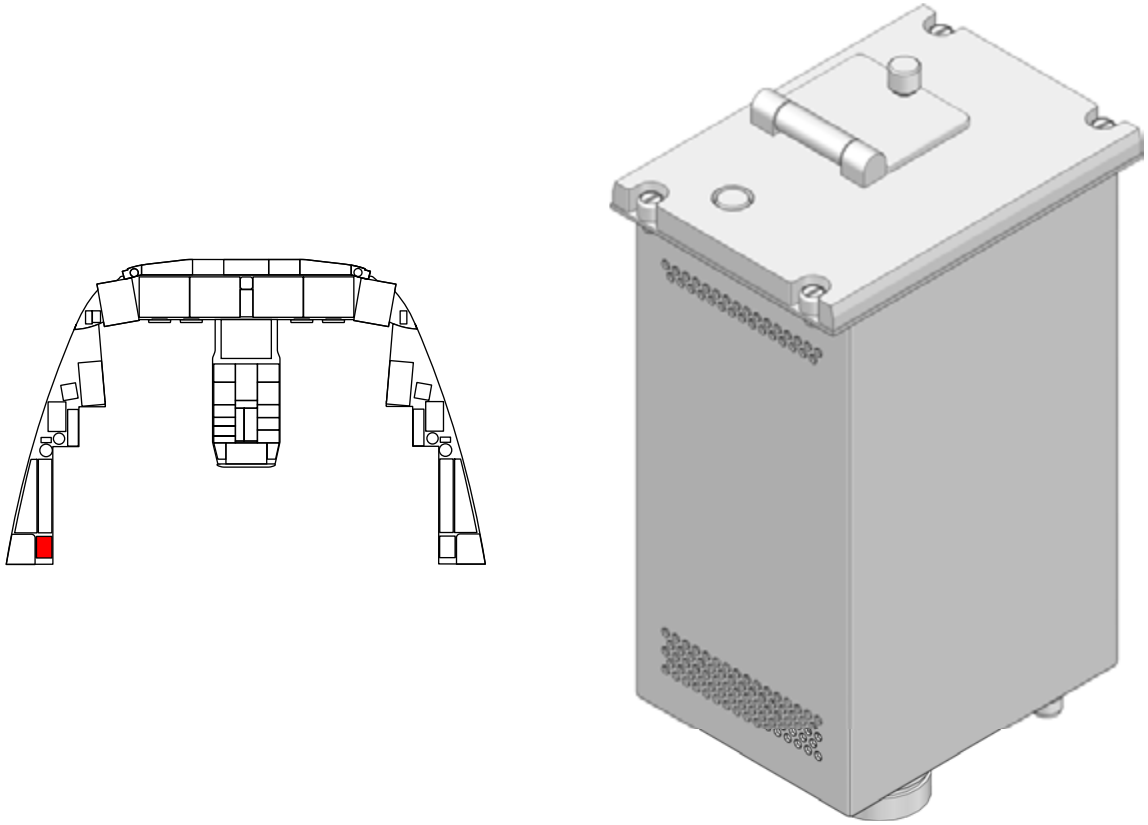

CS1_CS3_4615_001

Figure 2: Information Management System Location

COMPONENT INFORMATION

IMS UNIT

The front panel connectors on the IMS unit allow the operator to insert a USB memory stick into the unit, and to connect a laptop computer via the RJ45 jack.

The IMS has two indicator lights within the RJ45 Ethernet connector on front of the unit. The lights indicate link status and transfer speed as follows:

- Green LED - Indicates an established link; flashes when data is transferring
- Yellow LED - Indicates high speed connection; turns off when connection speed is low

If the ODL freezes during aircraft software data load, restart the IMS with power cycled off for at least 30 seconds with weight-on-wheels (WOW). Wait another 5 minutes for the IMS READY light-emitting diode (LED) to turn steady on, and restart the aircraft software data load from the beginning.

NOTE

If the IMS unit detects that it is installed in another aircraft, it deletes all stored memory.

Copyright © Bombardier Inc.

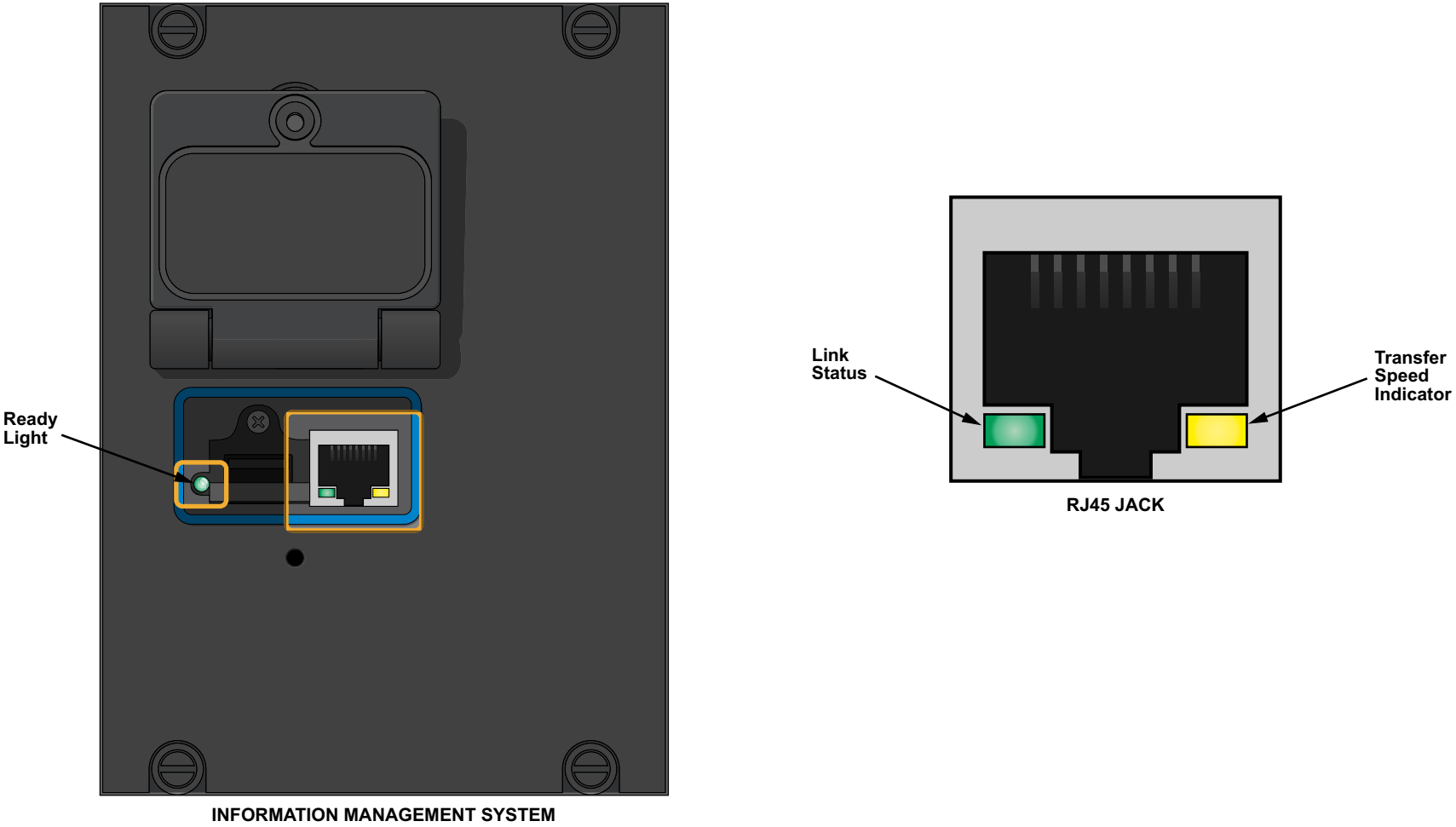

Figure 3: IMS Unit

CONTROLS AND INDICATIONS

All IMS related controls and indications are accessible via any multifunction window (MFW), or a laptop connected to the RJ45 connector.

Pressing the MENU pushbutton on the cursor control panel (CCP) displays the drop-down menu on the onside MFW. From here, pressing the DATA pushbutton displays the page format drop-down menu, where it is possible to select the information management page or the data load page.

The IMS maintenance portal can be accessed using a laptop computer and typing the IP address 192.168.15.1 on a web browser.

Copyright © Bombardier Inc.

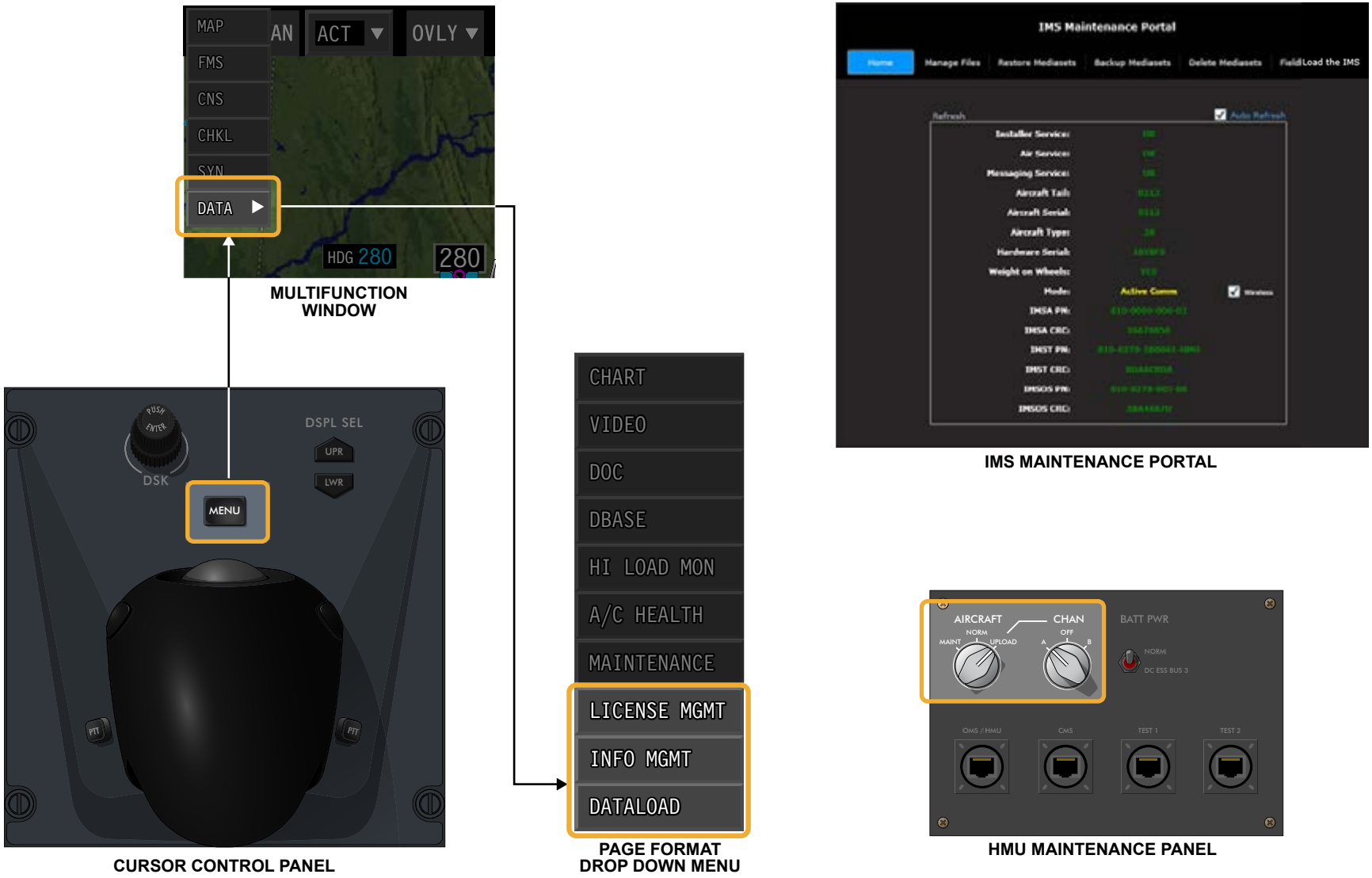

CS1_CS3_4615_012

Figure 4: IMS Controls and Indications

OPERATION

FILE MANAGEMENT

The first step when uploading a new file, is to transfer it to the IMS hard disk. This operation is accomplished via the INFORMATION MANAGEMENT menu on the MFW.

The IMS internal files structure has the following three main directories:

- Backup
- Installed
- New

Any file copied from a USB memory stick is stored in the applicable new directory. When the onboard data loader (ODL) successfully loads all the applicable targets with the appropriate files, it notifies the IMS file manager.

The IMS pushes the files in the following order:

- Deletes old versions from the backup directory
- Moves previously installed version of these files from the installed directory to the backup directory
- Copies the newly installed files from the new directory to the installed directory

Copyright © Bombardier Inc.

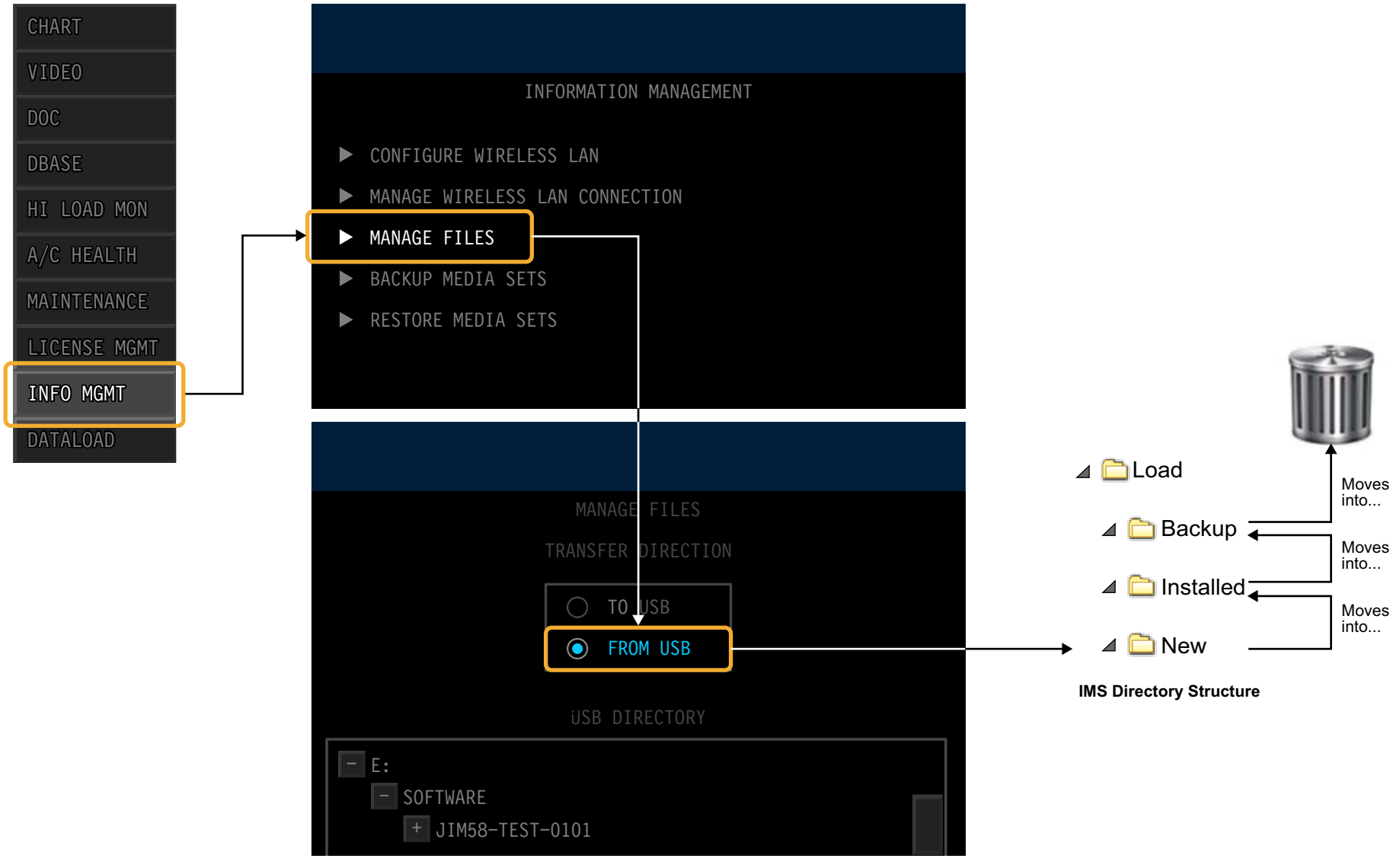

Figure 5: File Management

UPLOAD SCENARIOS

The onboard data loader (ODL) supports five different types of data load:

- New databases
- Documents and tables
- New or misconfigured line replaceable unit (LRU)/line replaceable module (LRM)
- Aircraft software set
- Reloads

Copyright © Bombardier Inc.

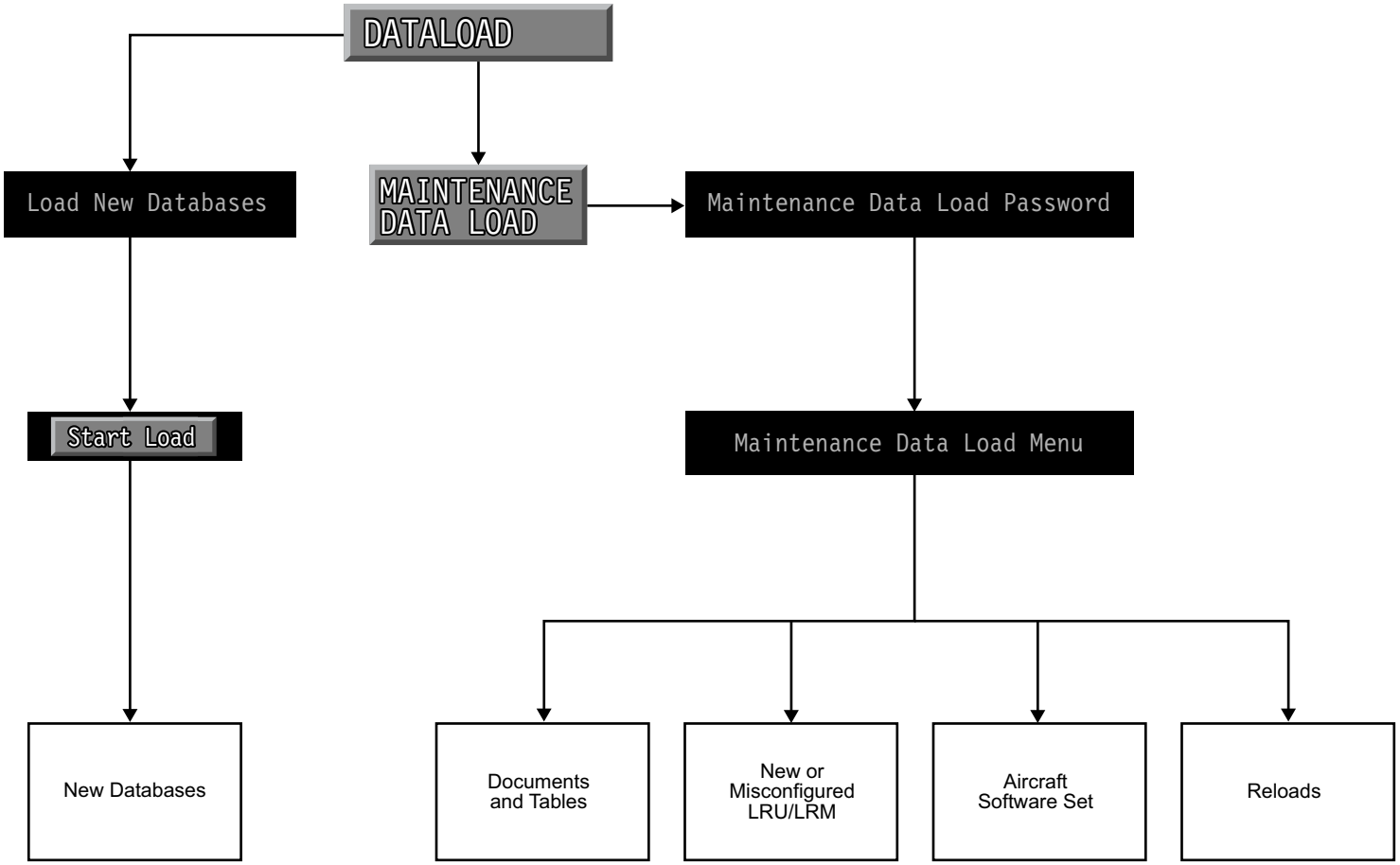

CS1_CS3_4615_013

Figure 6: Upload Scenarios

Copyright © Bombardier Inc.

Database, Document, and Table Upload Setup

The aircraft must be on the ground in order to load databases on to the aircraft.

The data loading is setup as follows:

1. On the HMU maintenance panel, set the AIRCRAFT switch to UPLOAD and the CHAN switch to A.
2. Press the MENU pushbutton on the cursor control panel (CCP).
3. Make sure that the MENU is displayed on the display unit (DU).
4. From the MENU, select DATA.
5. Make sure the DATA submenu is displayed.
6. From the DATA submenu, select DATALOAD.

NOTE

Some line replaceable units (LRUs) require the CHAN switch to be selected to B. A message is displayed on the DU to set the CHAN switch to B if required.

Copyright © Bombardier Inc.

HMU MAINTENANCE PANEL

NOTE

Select channel B if prompted during DATALOAD.

MULTIFUNCTION KEYBOARD PANEL

CURSOR CONTROL PANEL

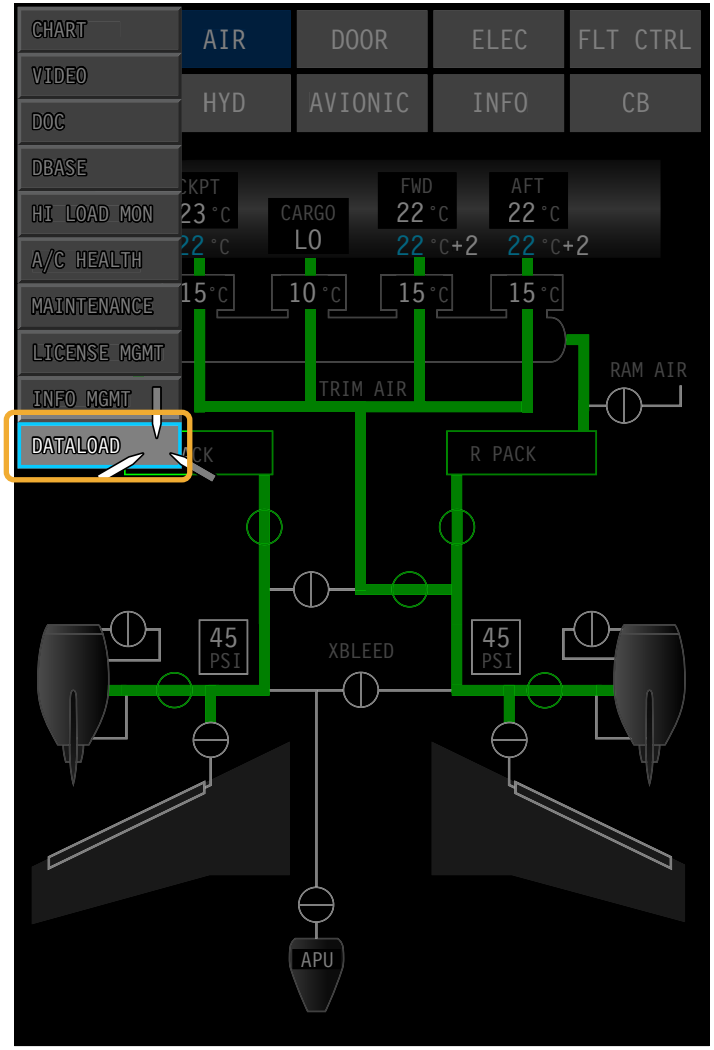

MULTIFUNCTION WINDOW

CS1_CS3_4615_019

Figure 7: Database Upload Setup

New Database Upload

When the database resides in the IMS, the LOAD NEW DATABASES menu permits initiation of the upload.

The following are some examples of files in this category:

- Navigation charts
- Graphical weather
- Enhanced maps
- Terrain awareness and warning system (TAWS) (except for high-resolution database)

On the Load New Databases page, use the cursor to select the database to load and select Start Load.

When the load starts, the progress status of each database is displayed along with the overall load progress status.

When the database load is complete, an amber message is not displayed. The status indicators are removed, and the green Load Complete message is displayed.

After 5 minutes, set the AIRCRAFT switch to NORM and the CHAN switch to OFF.

Use the circuit breakers and solid-state power controllers (SSPCs) to cycle the power to the following components:

- Display units (DUs) 1 through 5
- Integrated processing cabinets (IPCs) 1 through 4
- Data concentrator unit module cabinets (DMCs) 1 and 2

Copyright © Bombardier Inc.

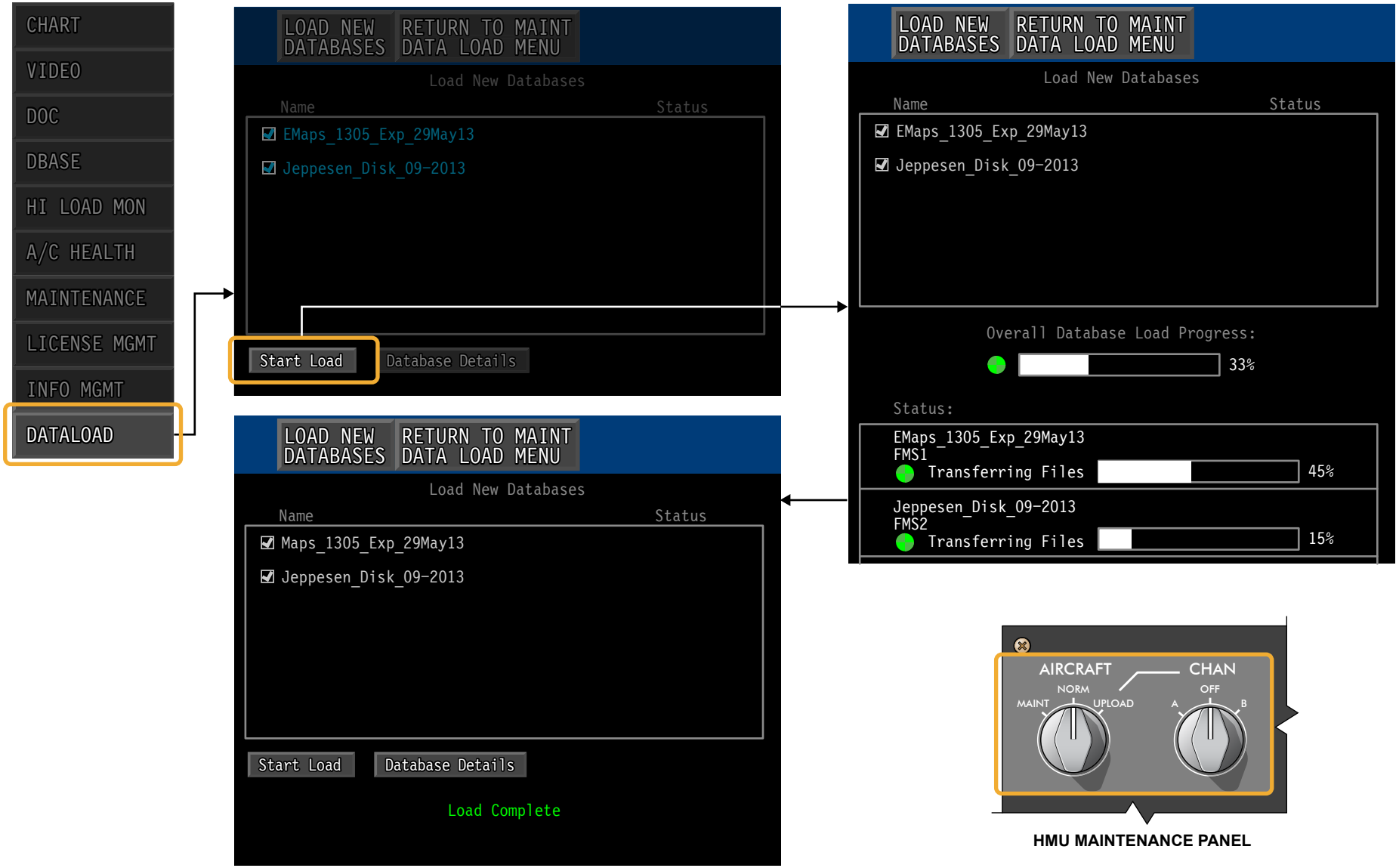

Figure 8: New Database Upload

Documents and Tables Upload

The MAINTENANCE DATALOAD page allows the upload of documents and tables. This section requires a password, which by default is MAINT. Upon selection of LOAD NEW DOCUMENTS & TABLES from this menu, the available loadable files are displayed.

The following are some examples of files in this category:

- Air data tables
- Traffic surveillance system (TSS) software
- Aircraft personality module (APM) options configuration
- Checklists

Load the document, table, or software as follows:

1. From the Load New Databases page, select MAINTENANCE DATA LOAD.
2. Make sure the Maintenance Data Load Password page is displayed.
3. Enter the password MAINT in the Enter Password data field, and then press the ENTER pushbutton on the MKP.
4. Make sure the Maintenance Data Load Menu page is displayed.
5. Select Load New Documents & Tables.
6. A check mark is automatically displayed in front of all documents, tables, and software. Remove the selection from all documents, tables, and software that are not required.
7. Select Start Load.
8. The progress status of each applicable load and the overall load progress status is displayed.
9. When the software load is complete, make sure there is no amber error message or status indicators displayed and the green Load Complete message is displayed.
10. Wait for 5 minutes, then set the AIRCRAFT switch to NORM and the CHAN switch to OFF.
11. Cycle the aircraft electrical power.

Copyright © Bombardier Inc.

CS1_CS3_4615_005

Figure 9: Documents and Tables Upload

Database, Document, or Table Verification

Check as follows that the correct database is installed:

1. Set the AIRCRAFT switch to MAINT.
2. From the DATALOAD submenu, select DBASE.
3. Make sure the database status page is displayed.
4. On the STATUS/PART NO. column, make sure the white database, document, or table status CURRENT is displayed.
5. Make sure the amber NOT CURRENT or INVALID is not displayed.

FMS Database Verification

Check the FMS database as follows:

1. Select the flight management system (FMS).
2. On the FMS database status page, make the selection DBASE.
3. On the STATUS tab, make sure that each FMS database agrees with the configuration of the aircraft:
   - Performance database (PERF)
   - Vspeed database (VSPEED)
   - Weight and balance database (WT&BAL).
4. Set the AIRCRAFT switch to NORM.

Copyright © Bombardier Inc.

DATABASE STATUS PAGE

FMS DATABASE PAGE

Figure 10: Database, Document, or Table Verification

Load New or Misconfigured LRU/LRM

Selecting Load New/Misconfigured LRU/LRM displays a list of all LRUs/LRMs the configuration manager detects as being misconfigured.

There are no selectable checkboxes next to the items on the list. By starting the data loading process, all files are uploaded. Six loads can be done at the same time. If more than six loads are selected, subsequent loads automatically start when an active load is complete.

If the new or misconfigured component is the common computing module (CCM) 2 in the integrated processing cabinet (IPC) 1, the system is not able to determine which LRU to load, since the configuration manager application resides in this module. In this case, it is necessary to use Reload LRU. Additional information is explained later in this chapter.

Software loading begins when the Start Load soft key is selected. The load progress of each LRU/LRM, along with the overall load progress, is displayed.

When the loading is finished, the status indicators are removed and a green Load Complete message is displayed. After 5 minutes, set the AIRCRAFT switch to MAINT and the CHAN switch to OFF.

Cycle the aircraft power, then check that no fault messages related to the LRU are displayed on EICAS. Verify the software configuration as described later in this section, then return the CHAN switch back to NORM.

NOTE

Some LRUs require the CHAN switch to be selected to B. A message is displayed on the DU to select the CHAN switch to B if required.

Only one primary flight control computer (PFCC) can be loaded at a time. The other two PFCCs must be off.

If a DU is data loaded, then the data load page may be not be displayed on the target DU. The data load page automatically gets displayed on a different DU.

Load Aircraft Software Set

Load Aircraft Software Set provides a drop-down, the user selects the appropriate software part number from a menu.

The load initiates by selecting the Start Load soft key.

During the load procedure, the ODL automatically loads all the associated software into the aircraft LRUs/LRMs.

Copyright © Bombardier Inc.

Figure 11: Load New/Misconfigured LRU/LRM and Load Aircraft Software Set

Copyright © Bombardier Inc.
CS130-21.02-06.00-121418

File Details

By default, only the name of the files are displayed on the loading menu.

To view the details of the files to upload, select the LRU Details or Software Set Details soft key.

A details window displays at the bottom of the page.

Figure 12: File Details

Reload Data and Software

Reload Data and Software reloads data and software into LRUs not checked by the configuration manager such as some databases and customer configurable software.

This permits LRUs updates when databases, documents, tables, or software are outdated.

Reload LRU

Reload LRU reloads data and software into a LRU that is not reported as misconfigured by the configuration manager.

The ODL automatically reloads all load sets from the installed directories back into selected LRUs in the proper sequence.

Copyright © Bombardier Inc.

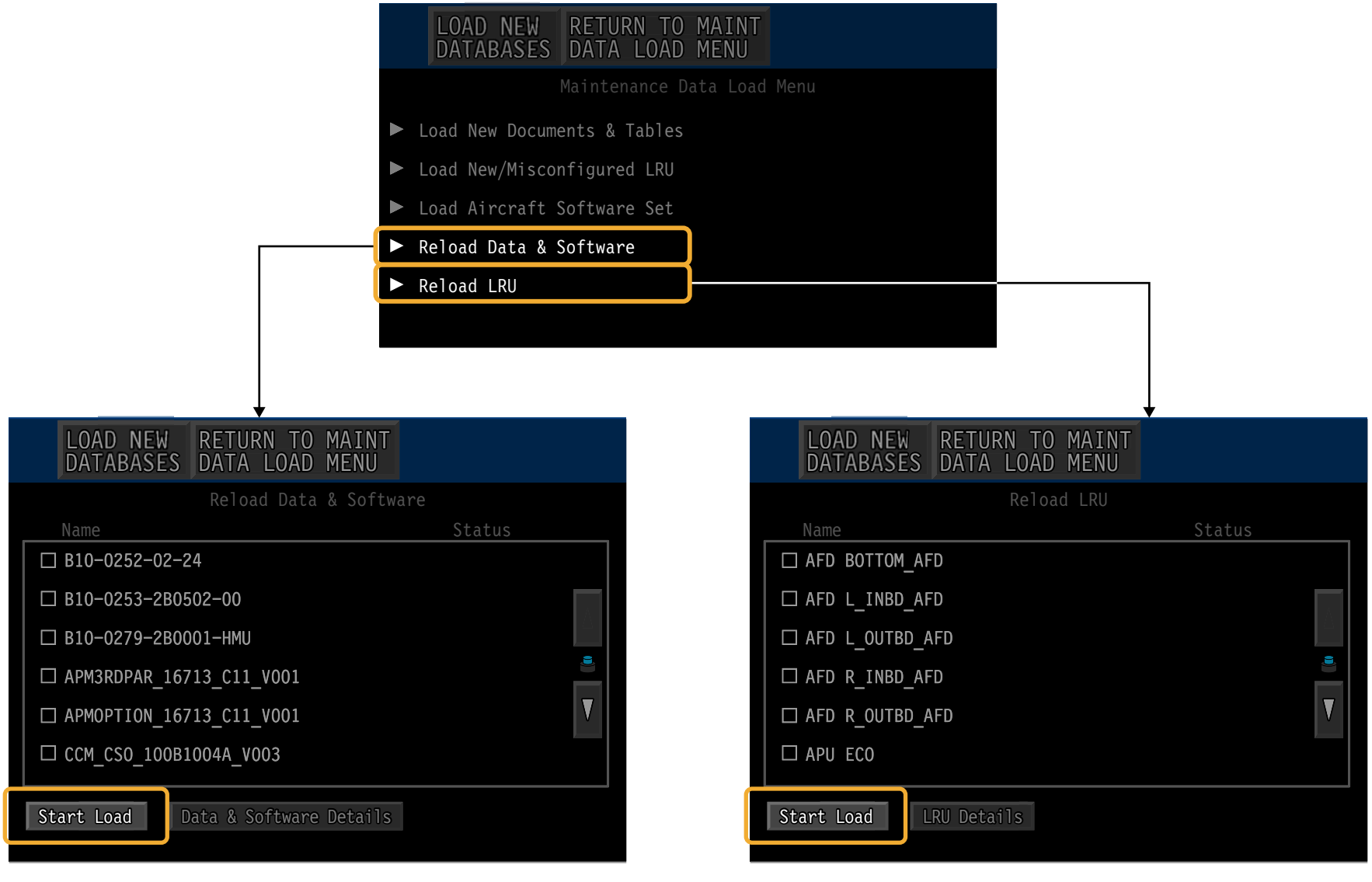

Figure 13: Reload Data and Software and Reload LRU

Software Configuration Verification

Check the LRU software configuration as follows:

1. Use Table 6 of the Aircraft Maintenance Publication (AMP) software configuration procedure to confirm the correct software is installed.
2. If the LRU is not in Table 6, use the alternate procedure.
3. Access the onboard maintenance system (OMS) LRU/System Operations page.
4. Select the ATA, LRU, and LRU channels.
5. Select the CONFIG tab.
6. Check the SOFTWARE P/N and cycle redundancy check (CRC) against each software configuration item in Table 6, and verify that the part number and CRC agree with the software configuration of the aircraft.

Copyright © Bombardier Inc.

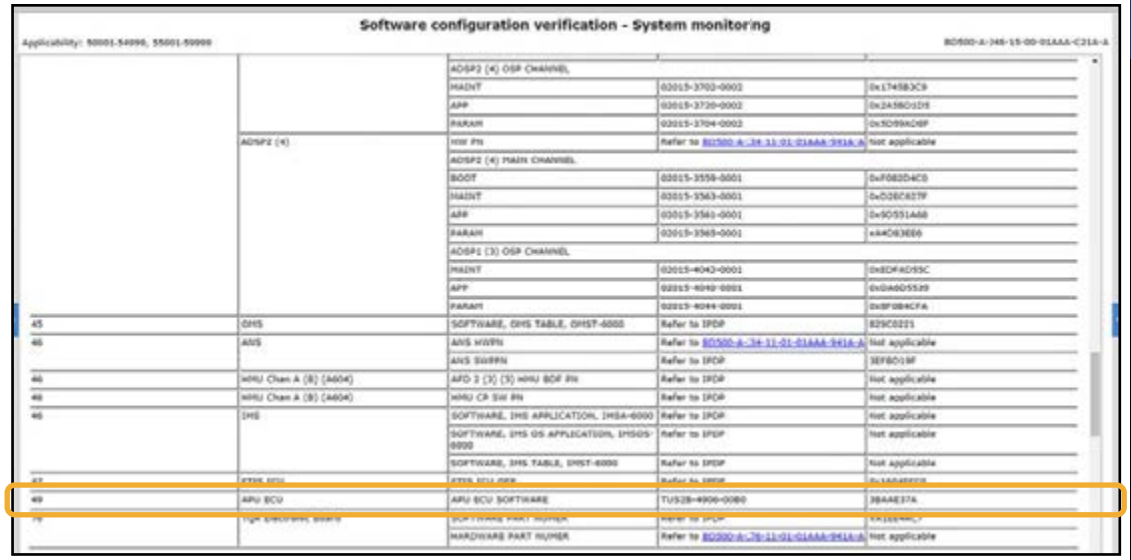

Software configuration verification - System monitoring

		ADSP2 (4) OSP CHANNEL		
		MAINT	02015-3702-0002	0x1745B3C9
		APP	02015-3720-0002	0x2A5BC1D5
		PARAM	02015-3704-0002	0x5D99AD8F
	ADSP2 (4)	HW PN	Refer to BD500-A-34-11-01-01AAA-941A-A	Not applicable
		ADSP2 (4) MAIN CHANNEL		
		BOOT	02015-3558-0001	0xF083D4C0
		MAINT	02015-3563-0001	0xD2BC627F
		APP	02015-3561-0001	0x9D551A68
		PARAM	02015-3565-0001	0xA4D83E86
		ADSP1 (3) OSP CHANNEL		
		MAINT	02015-4043-0001	0x8DF4D95C
		APP	02015-4040-0001	0x0A6D5589
		PARAM	02015-4044-0001	0x8F08ACFA
45	DHS	SOFTWARE, DHS TABLE, DHST-6000	Refer to IPDP	B29C0221
46	AHS	AHS HWPN	Refer to BD500-A-34-11-01-01AAA-941A-A	Not applicable
		AHS SWPPN	Refer to IPDP	3EFBC19F
46	HHU Chan A (B) (A604)	AFD 2 (3) (3) HHU BOF PN	Refer to IPDP	Not applicable
46	HHU Chan A (B) (A604)	HHU CP SW PN	Refer to IPDP	Not applicable
46	IHS	SOFTWARE, IHS APPLICATION, IHSA-6000	Refer to IPDP	Not applicable
		SOFTWARE, IHS OS APPLICATION, IHSOS-6000	Refer to IPDP	Not applicable
		SOFTWARE, IHS TABLE, IHST-6000	Refer to IPDP	Not applicable
47	ETHS ECU	ETHS ECU OSP	Refer to IPDP	0x1A0AE0C0
49	APU ECU	APU ECU SOFTWARE	TUS2B-4906-00B0	3BAAE37A
79	High electronic board	SOFTWARE PART NUMBER	Refer to IPDP	5A1E8AAL7
		HARDWARE PART NUMBER	Refer to BD500-A-79-11-01-01AAA-941A-A	Not applicable

TABLE 6

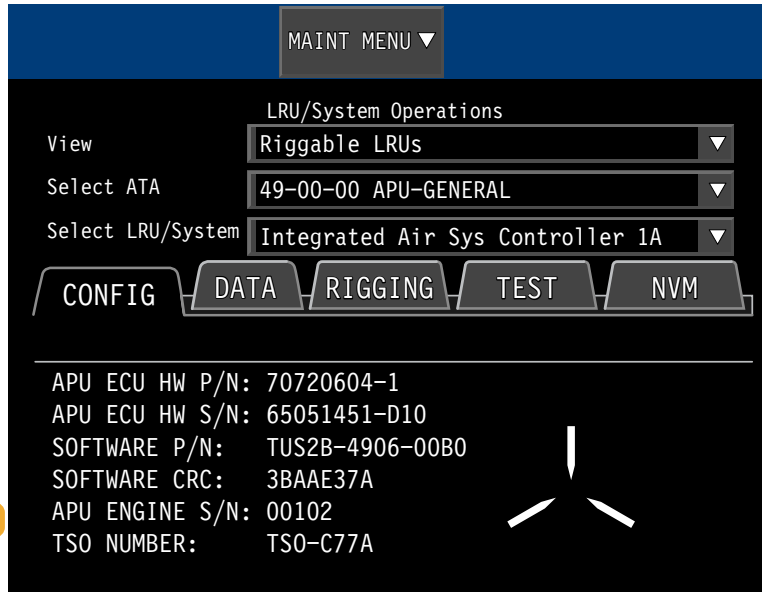

CS1_CS3_4615_018

Figure 14: Software Configuration Verification

Copyright © Bombardier Inc.

Alternate Software Configuration Verification

The following steps are an alternative method of verification for the integrated modular avionics (IMA) software items:

1. Access the OMS System Configuration page.
2. Select the IMA Software Part Numbers.
3. Make sure the Type Number, Position, and the CPN (software part number) columns are displayed in white on the DU.
4. Make sure that the software part number shown in the CPN column agrees with the software configuration of the aircraft. Refer to the Illustrated Parts Data Publication (IPDP) for more details.
5. Make sure the amber dashed line is not displayed in the CPN column.

NOTE

If an amber dashed line is displayed in the CPN column, there is a misconfigure condition between the software part number and the LRU/LRM.

For the IMA application IMAA-6000, make sure that the CRC is displayed as F01D7479.

Copyright © Bombardier Inc.

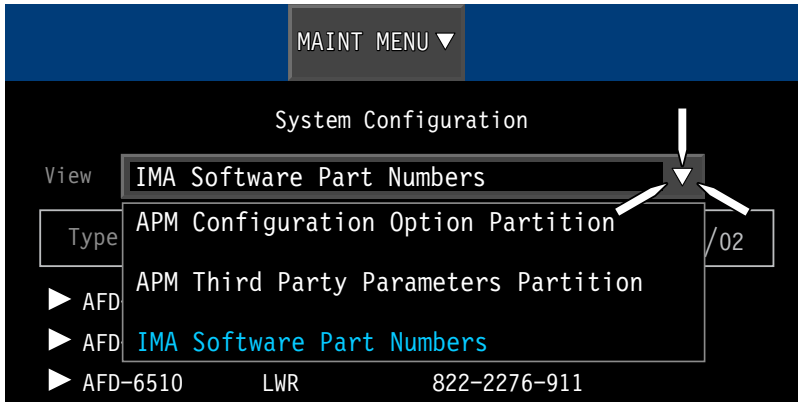

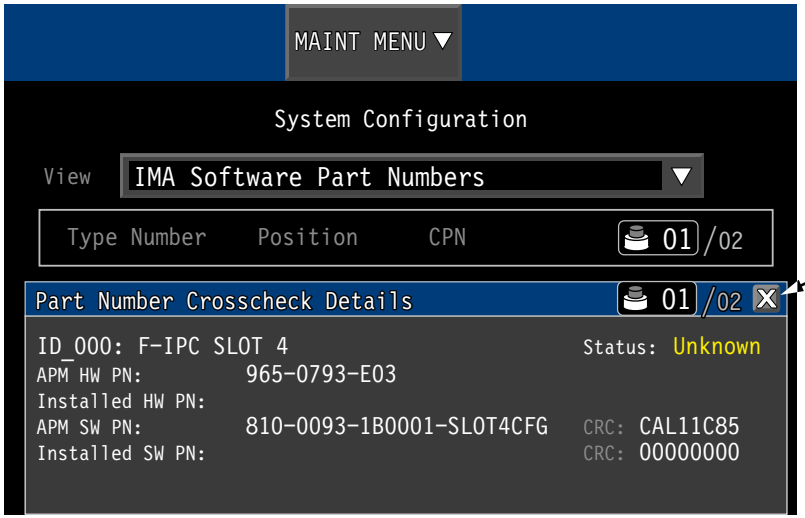

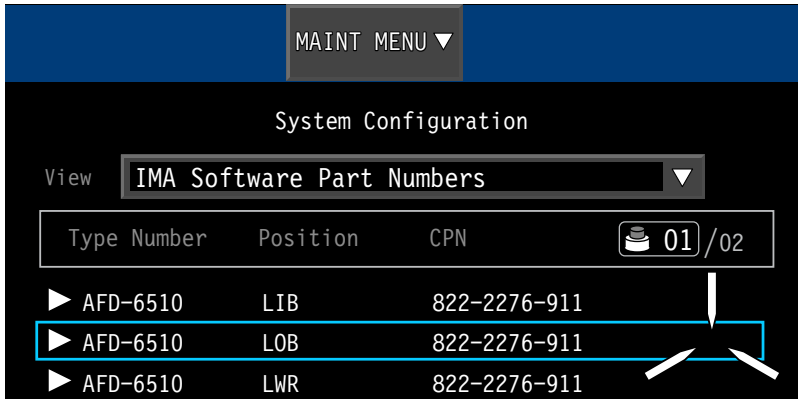

CS1_CS3_4615_020

Figure 15: Software Configuration Verification

DETAILED DESCRIPTION

DATA LOAD PROCESS

The IMS is the main component in the data load process. It provides data and software storage, a USB port for removable media, and an Ethernet interface for laptop connectivity.

The data load of LRU/LRM components requires the aircraft to be weight-on-wheels (WOW), the AIRCRAFT switch to be selected to UPLOAD, and the CHAN switch to be selected to A or B.

To avoid having all components enabled for upload at the same time, all loadable components are divided in two channels, A and B. Maintenance personnel need to refer to the Aircraft Maintenance Publication (AMP) to find out which channel to select for a specific component.

The process is divided in to the following three main steps:

1. Load the files into the IMS hard drive.
2. Load files from IMS to LRUs/LRMs.
3. Verify LRUs/LRMs software configuration, via the onboard maintenance system (OMS).

Load Files into the IMS Hard Drive

The loading instructions are provided on the multifunction window (MFW). In some cases, it is necessary to use a laptop computer instead of the MFW interface, for example when uploading aircraft software sets on new aircraft. The laptop can be connected on the IMS, the HMU maintenance panel, or any other maintenance panel.

The laptop uses a standard web browser to access the IMS IP address. The computer is only a user interface, the files are still transferred from a USB support.

When performing full aircraft media set loads, a laptop is used since no displays are available to monitor the software load.

Use the remote data loader IP address (192.168.15.1/rdl/rdl.swf) when connecting the laptop to the aircraft. The laptop provides a display similar to the aircraft DU. To perform a field service data load, a password is required.

Up to six LRUs can be selected to load at one time. If more than six LRUs require loading, the loading of additional LRUs starts when the first six loads are complete.

The onboard data loader (ODL) only loads software data that is stored on the IMS hard drive.

NOTE

A load set is any single set of files that is loaded into a target. A media set is a grouping of one or more load sets contained in a delivered package (may contain load sets that get loaded into multiple targets).

Load Files from IMS to LRUs/LRMs

The IMS hosts the onboard data loader (ODL) application, which operates in the Windows XP operating system and provides the user interface for uploading files.

The application is capable of automatically determining the appropriate target for each selected file and loading them in the appropriate order. This is done by consulting the configuration manager.

The configuration table is updated in the APM when software is updated in an LRU/LRM.

When the load is completed, wait 5 minutes before cycling the aircraft power to allow the IMS to complete internal file transfer between folders.

Copyright © Bombardier Inc.

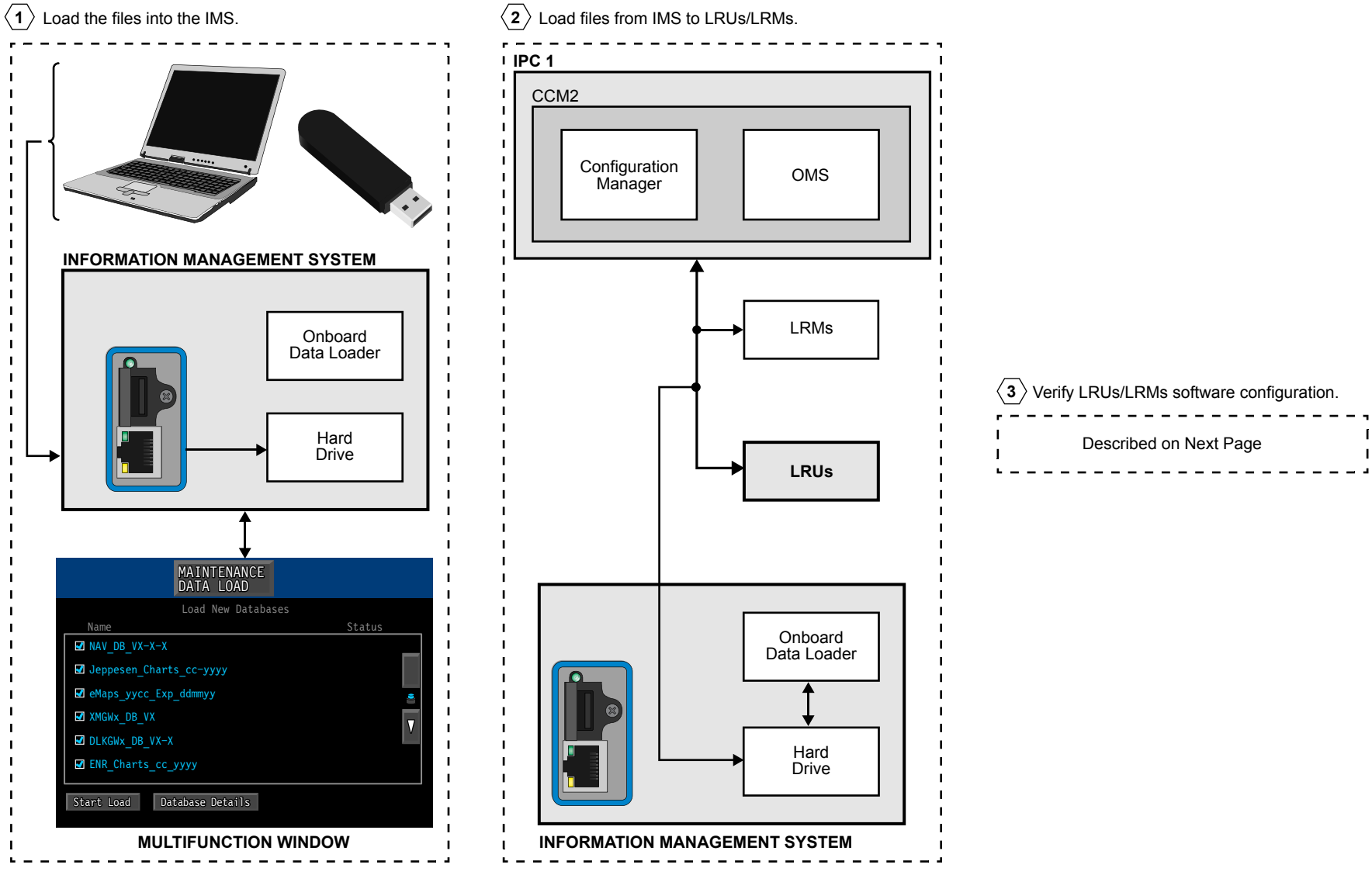

Figure 16: Data Load Process

Verify LRUs/LRMs Software Configuration

The OMS verifies that the correct software is installed on the avionics full duplex switched Ethernet (AFDX) components and ensures the aircraft personality module (APM) contains matching data. It is also possible to verify installed software on ARINC 429 components by selecting the Perform LRU/System Operation option from the Maintenance Main Menu page.

The common computing module (CCM) 2 hosts the onboard maintenance system (OMS). It displays mismatched application software and hardware identified by the configuration manager to the user, via fault messages on the engine indication and crew alerting system (EICAS).

CONFIGURATION MANAGEMENT

When loading files from the information management system (IMS) to the LRUs/LRMs, the following components are involved in the process:

- IMS
- Configuration manager
- OMS
- EICAS

The configuration manager application is hosted in CCM 2 inside integrated processing cabinet (IPC) 1. The main functions are to automate the aircraft systems software configuration, and to validate the APM options information.

The configuration manager also detects any misconfigured component by comparing installed software with a configuration table in the APM. This is displayed on the multifunction window (MFW).

The configuration manager operates in the following two modes:

- Non-subscription: The non-subscription mode allows transfer of files and data via USB only. It manages up to three versions, new/uninstalled, installed, and backup of data locally on the IMS
- Optional subscription mode: The optional subscription mode allows transfer of data via wireless communications with the ground infrastructure

Copyright © Bombardier Inc.

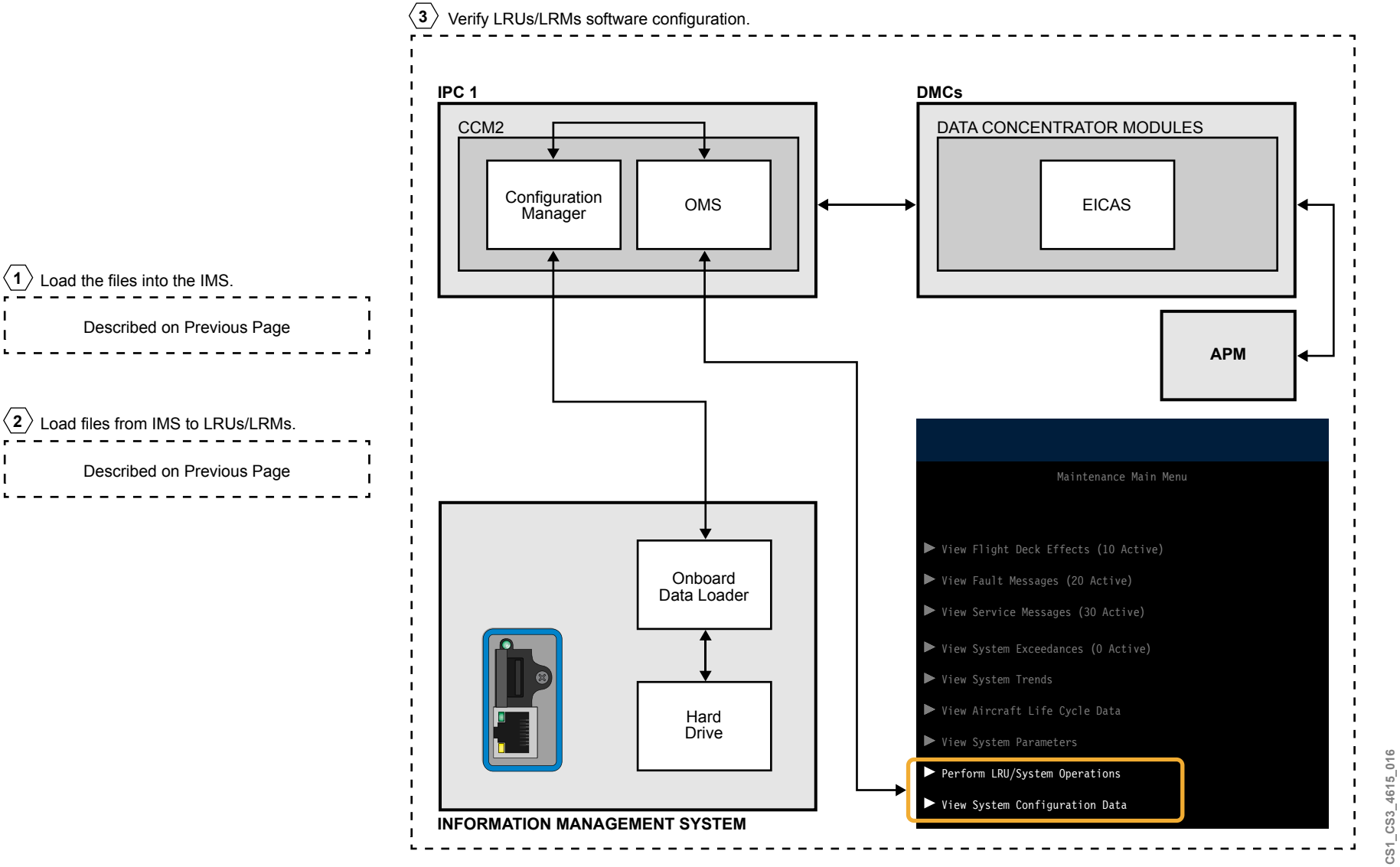

Figure 17: Configuration Management

46-11 AIRCRAFT HEALTH MANAGEMENT SYSTEM

GENERAL DESCRIPTION

The aircraft health management system (AHMS) is responsible for the monitoring and recording of aircraft systems data, and generating reports based on the recorded data.

The AHMS is part of the information system and consists of:

- Health management unit (HMU)
- Aircraft network switch (ANS)
- HMU maintenance panel

The HMU records and monitors aircraft systems and engine conditions.

The AHMS interfaces with the information management system (IMS) and all the maintenance panels through the ANS.

To perform maintenance operations, the aircraft has to be on the ground and the AIRCRAFT switch on the HMU maintenance panel in the MAINT position. When in maintenance mode, the HMU maintenance panel sends a discrete signal to the IMS and all affected line replaceable units (LRUs).

The system power interface is as follows:

- HMU receives power inputs from DC BUS 1, DC BUS 2, and DC EMER BUS
- ANS receives power input from DC BUS 1
- IMS receives power input from DC BUS 1

Copyright © Bombardier Inc.

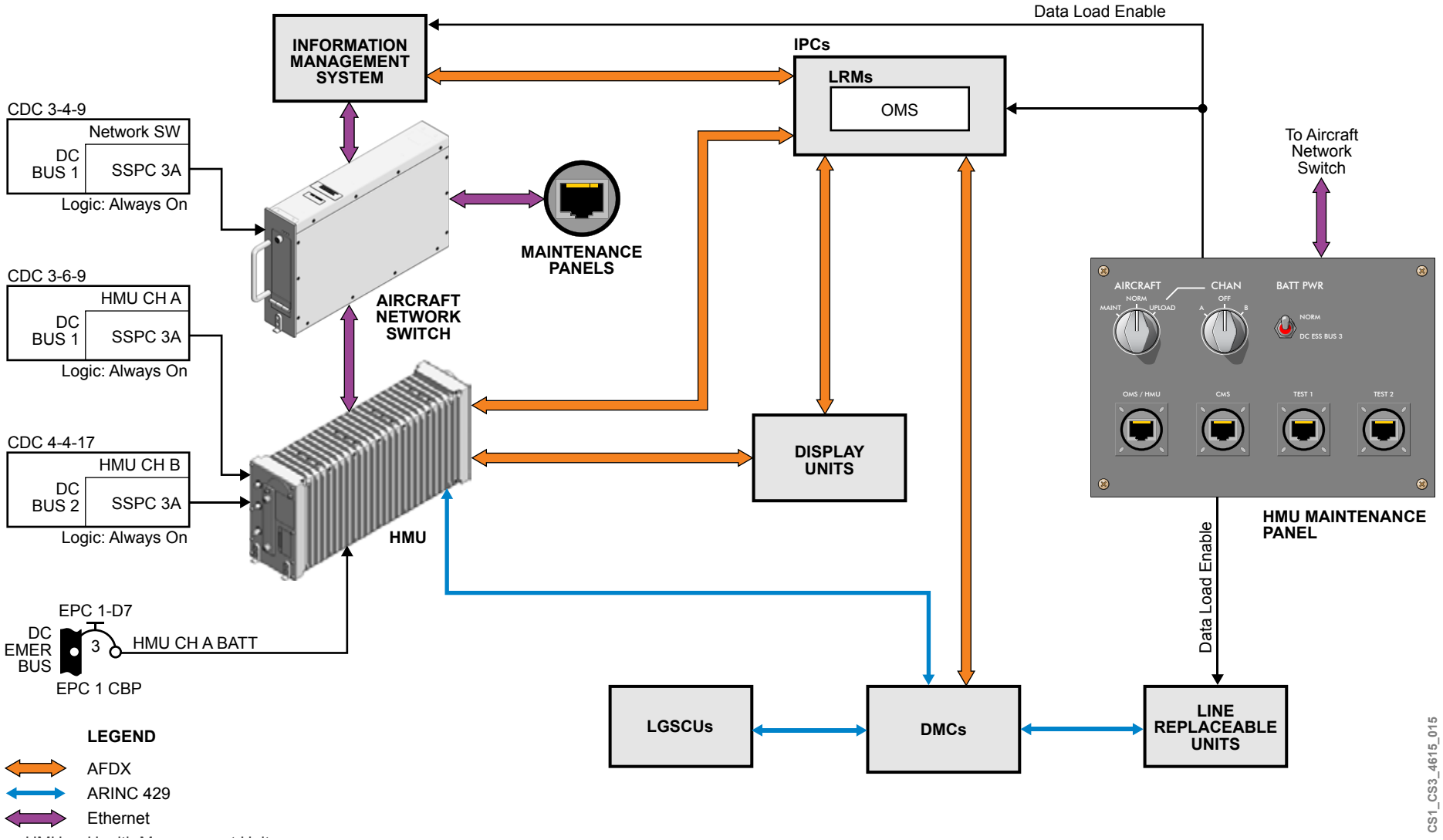

Figure 18: Aircraft Health Management System

COMPONENT LOCATION

The following components are part of the AHMS:

- Health management unit
- Aircraft network switch

HEALTH MANAGEMENT UNIT

The health management unit (HMU) is located on the top shelf of the forward equipment bay.

AIRCRAFT NETWORK SWITCH

The aircraft network switch (ANS) is located on the top shelf of the forward equipment bay.

Copyright © Bombardier Inc.

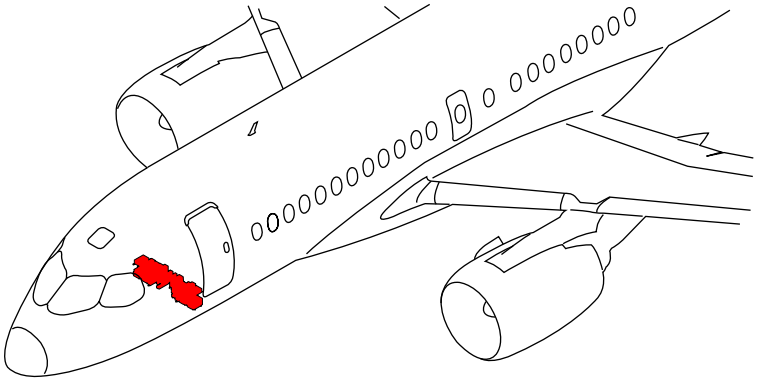

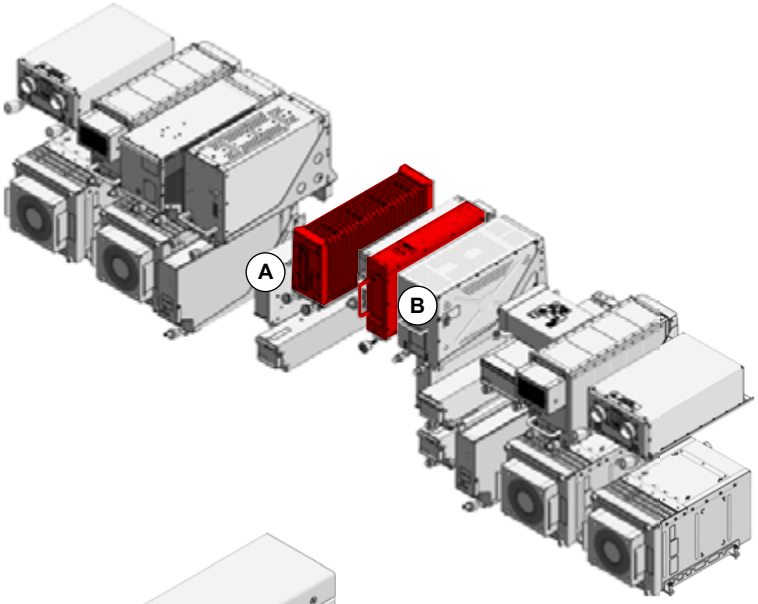

FWD EQUIPMENT BAY AFT RACK

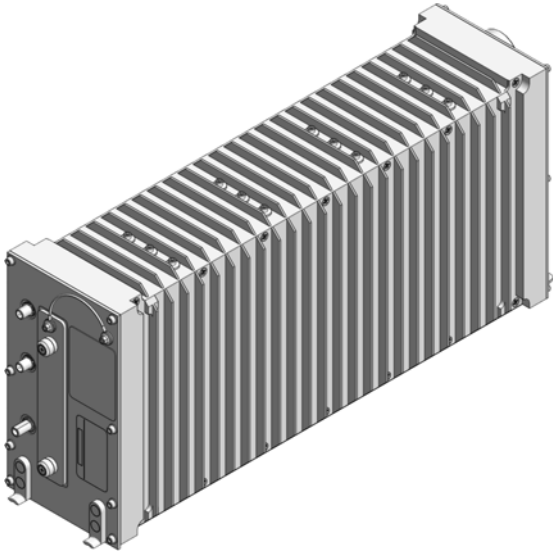

A HEALTH MANAGEMENT UNIT

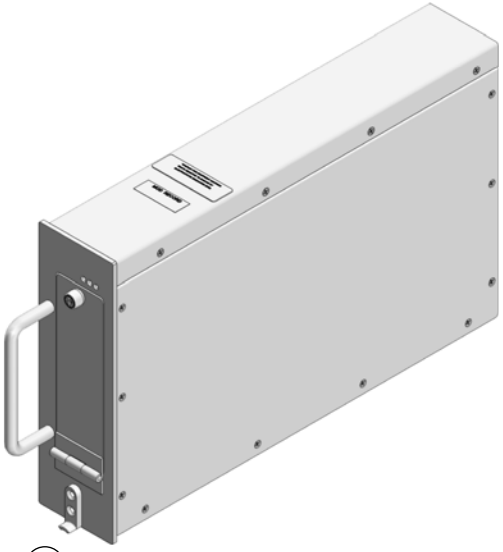

B AIRCRAFT NETWORK SWITCH

CS1_CS3_4611_007

Figure 19: Health Management System Component Location

Copyright © Bombardier Inc.

HMU MAINTENANCE PANEL

The HMU maintenance panel is located on the left side of the flight deck bulkhead.

Copyright © Bombardier Inc.

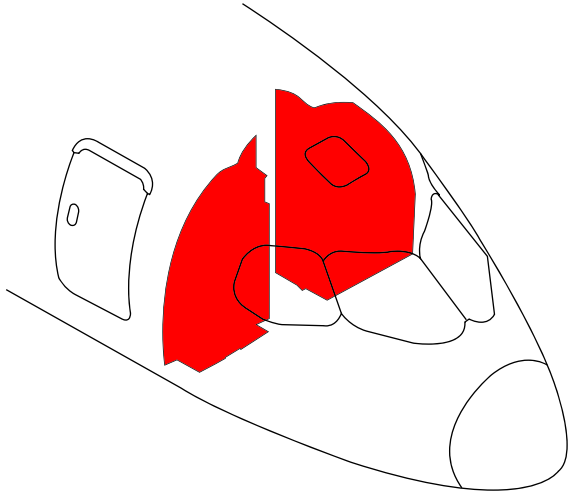

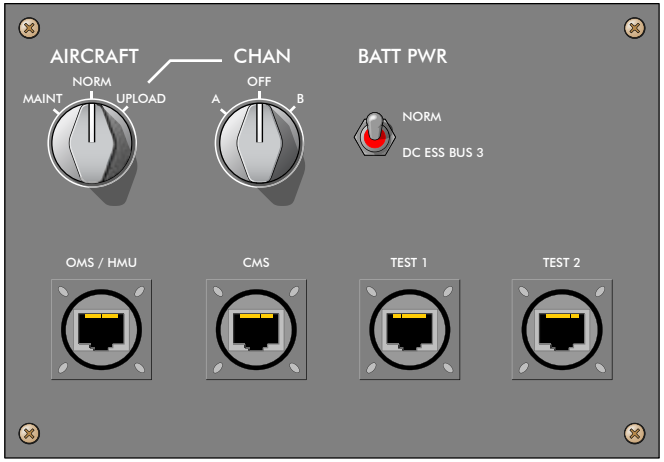

HMU MAINTENANCE PANEL

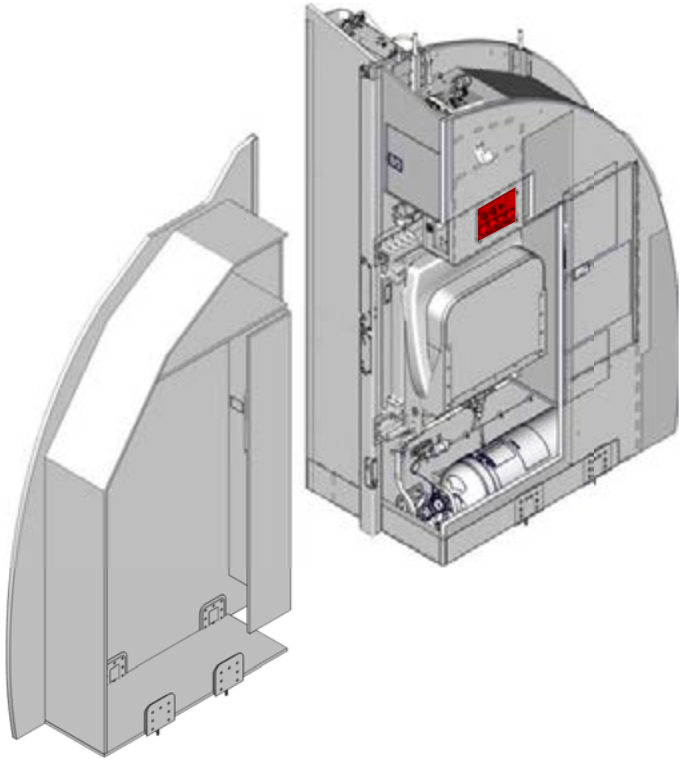

FLIGHT DECK

CS1_CS3_4611_008

Figure 20: HMU Maintenance Panel

Copyright © Bombardier Inc.

COMPONENT INFORMATION

HEALTH MANAGEMENT UNIT

The HMU provides the following aircraft health managing functions:

- High load event indication function (HLEIF) (optional)
- Usage-based monitoring function (UBMF)
- Aircraft data recording function (ADRF)
- Aircraft condition monitoring function (ACMF)
- Aircraft data exchange function (ADEF)
- Aircraft data management function (ADMF)
- Wireless connectivity (optional)

Copyright © Bombardier Inc.

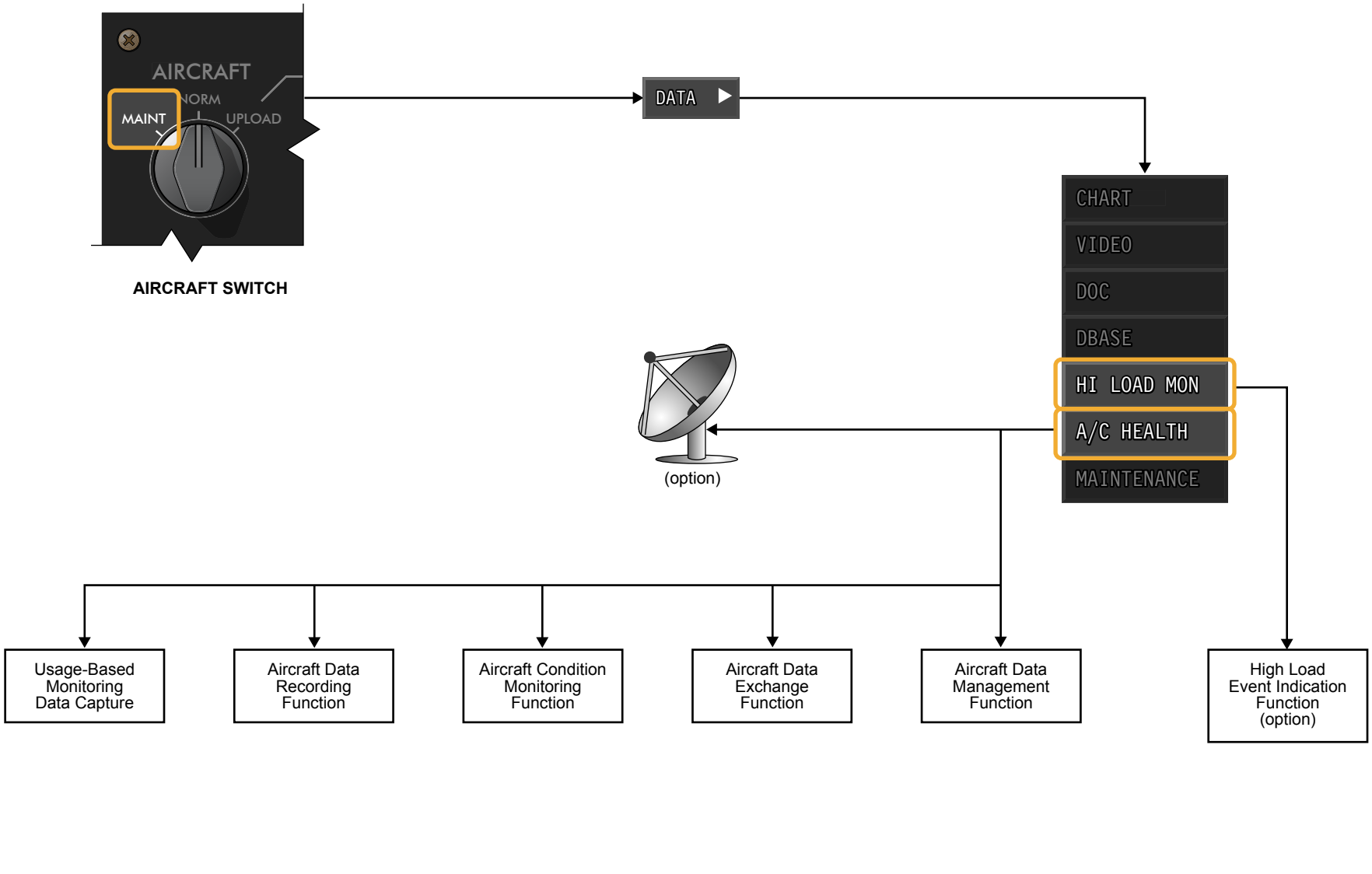

Figure 21: Health Management Unit

Copyright © Bombardier Inc.

CONTROLS AND INDICATIONS

The aircraft health management system (AHMS) handles large amounts of aircraft data. Maintenance personnel can access this data by generating health reports and consulting the high load event indication function.

HEALTH REPORTS

The A/C HEALTH page formats are only accessible when the aircraft is on the ground.

This page consists of three subfunctions related to health management (REPORT, MAINT, and TRIGGER) accessible from a drop-down list selector. It provides the capability to manually initiate the reports offloading from the reports list.

The REPORT page is a list of reports that were triggered during the previous 20 flights.

The MAINT page displays the status of the HMU connection to the ground station, including the infrastructure being used for communication (e.g. Cellular, WiFi, Ethernet).

Copyright © Bombardier Inc.

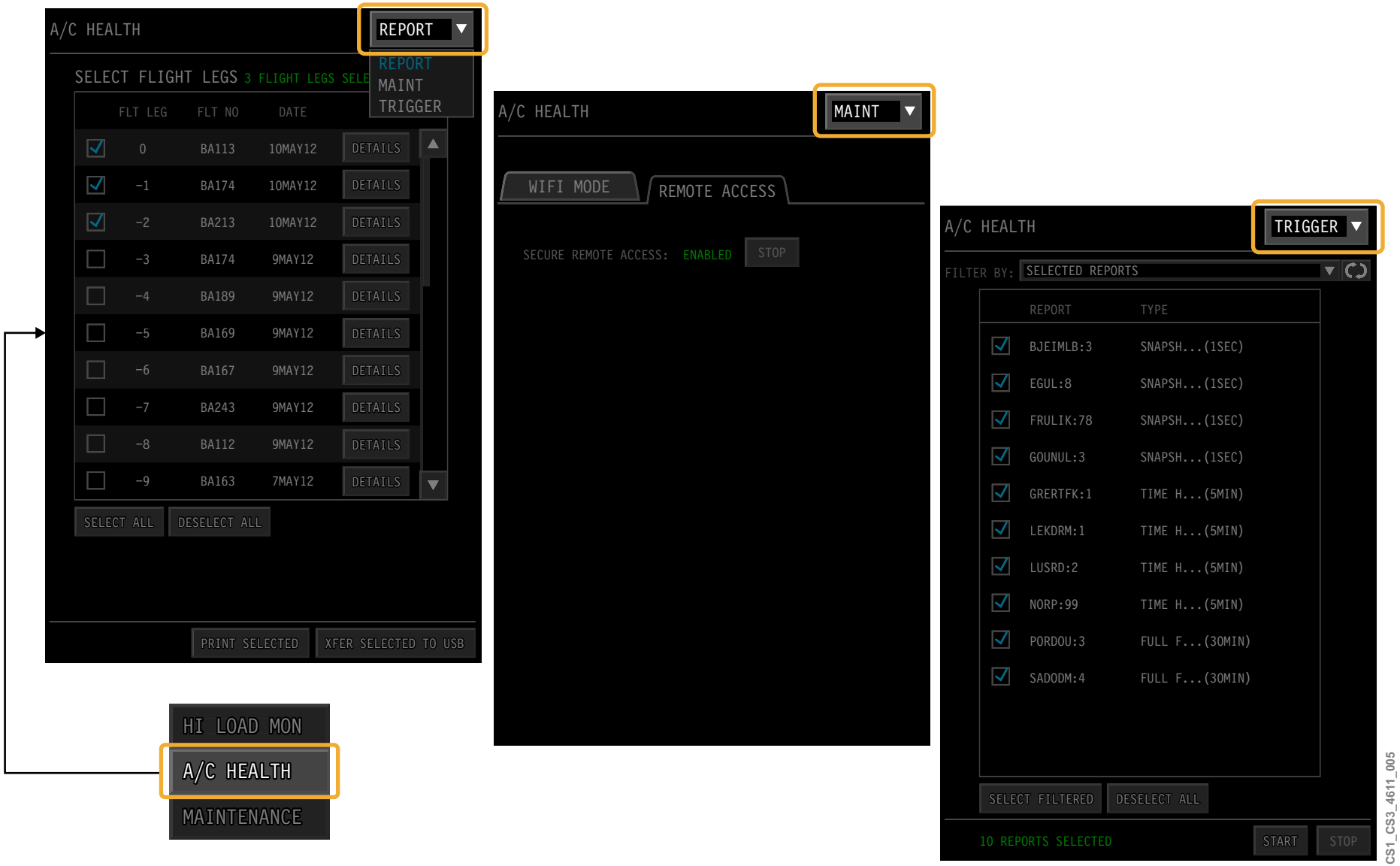

Figure 22: Health Report Pages

HIGH LOAD EVENT INDICATION FUNCTION

The optional high load event indication function page is accessible by selecting HI LOAD MON from the DATA menu.

When a HI LOAD EVENT advisory message is displayed on the EICAS, maintenance personnel are required to perform inspections and/or maintenance on the aircraft based on the type and severity of the event. The type and severity of the event can be determined by reviewing the INFO messages.

The HI LOAD EVENT advisory message can only be cleared through maintenance action. Refer to the Practical Aspects section of this ATA for more details.

Copyright © Bombardier Inc.

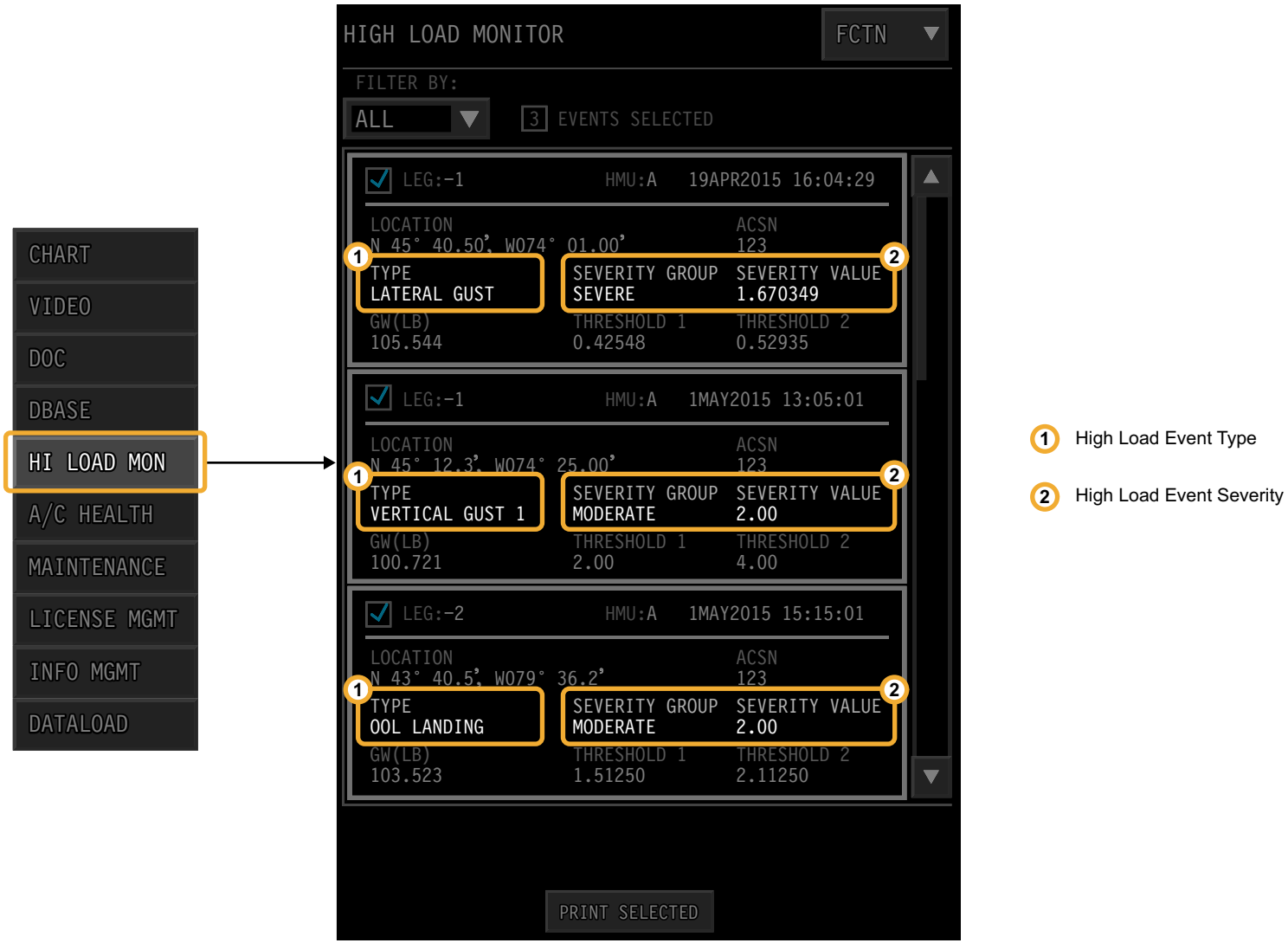

HIGH LOAD MONITOR PAGE

CS1_CS3_4611_009

Figure 23: High Load Event Indication Function

DETAILED DESCRIPTION

HIGH LOAD EVENT INDICATION FUNCTION

With the high load event indication function (HLEIF) option, acceleration data from the aircraft inertial reference system (IRS), is monitored to detect heavy turbulence, gust, and hard landing events. Detected events are displayed in the crew alerting system (CAS). It also records data before and after the events for subsequent analysis.

USAGE-BASED MONITORING FUNCTION

The usage-based monitoring function (UBMF) records data to support life monitoring for engine and airframe systems.

AIRCRAFT DATA RECORDING FUNCTION

The aircraft data recording function (ADRF) is a configurable data recorder. A configuration file is used to configure user selectable options in the ADRF, including recording start and stop criteria, parameters selection, and recording rates. It also acts as a virtual quick access recorder.

AIRCRAFT CONDITION MONITORING FUNCTION

The aircraft condition monitoring function (ACMF) is a fixed functionality that captures and records data for power plant, auxiliary power unit, and airframe system health monitoring. It uses the engine manufacturer trending and reporting configuration, and the original equipment manufacturer (OEM) aircraft performance report data.

AIRCRAFT DATA MANAGEMENT FUNCTION

The aircraft data management function (ADMF) provides data and reports that can be manually or automatically off-loaded from the HMU.

For automatic data off-loading, the system uses an operator assigned priority level and an operator configured communication channel to determine when, and over which, communication channel to transmit the files.

Manual data off-load is possible via a USB, laptop computer, or wireless connection. Some reports can also be printed.

AIRCRAFT DATA EXCHANGE FUNCTION

The aircraft data exchange function (ADEF) provides a means for moving software and file updates onto the aircraft.

In subscription mode, updates are received from the ground station through a wireless connection.

If necessary, files are transferred to the IMS using trivial file transfer (TFTP) protocol.

In non-subscription mode, data exchange is accomplished via USB connection.

WIRELESS CONNECTIVITY

As an option, the HMU supports off-loading of data via WiFi, cellular connection, and the aircraft communications addressing and reporting system (ACARS).

Copyright © Bombardier Inc.

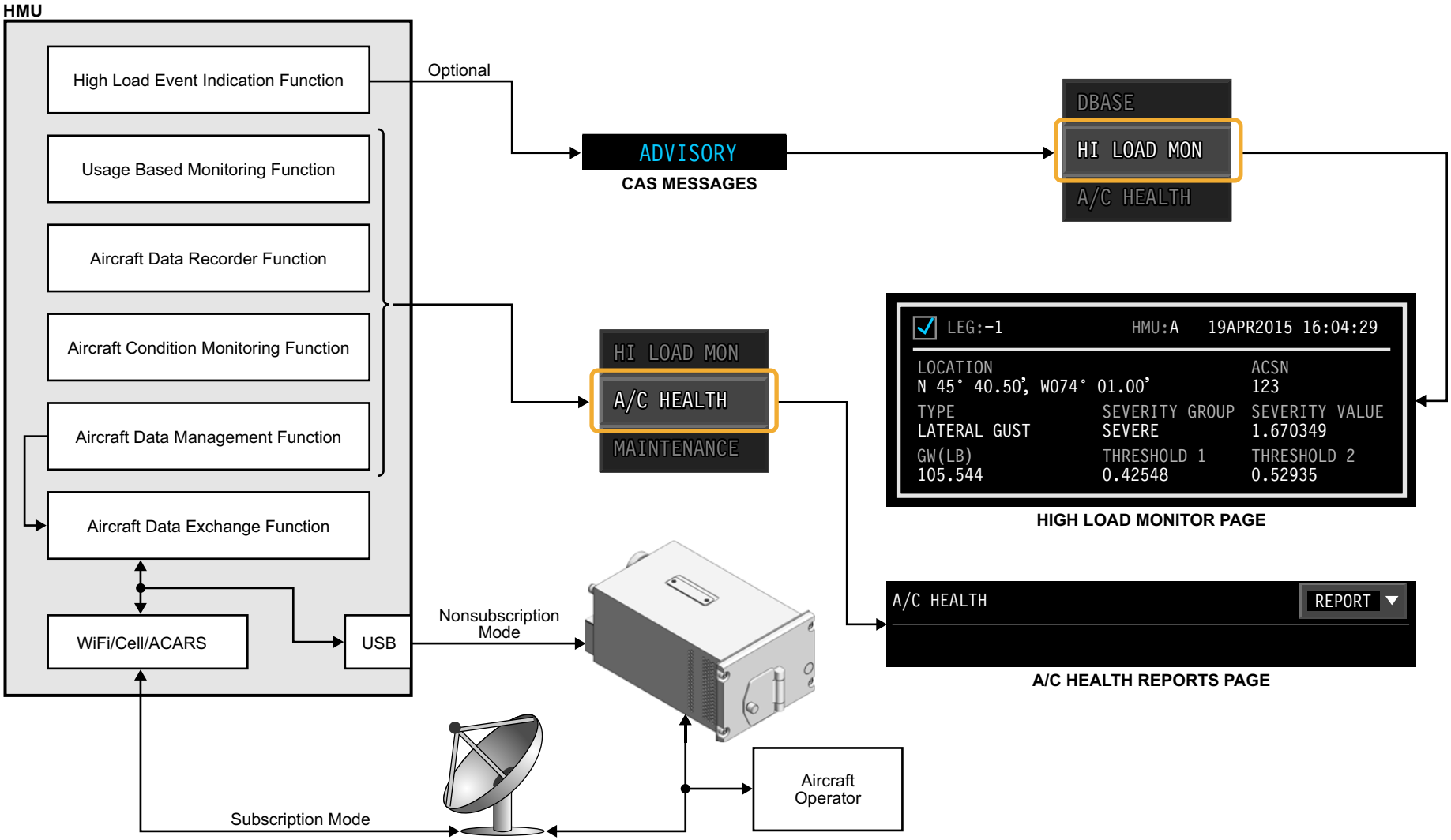

Figure 24: Aircraft Health Management System Functions

AIRCRAFT NETWORK SWITCH

The aircraft network switch (ANS) provides the following functions:

- Interface between information system components
- Connectivity via RJ45 Ethernet ports
- Network security

In order to support these capabilities, the ANS is designed to provide multiple virtual local area networks (VLANs) and an access control list (ACL).

The ANS receives and processes the data from all connected components, and transmits it only to the component for which the data was addressed. The switch examines the destination and source components addresses, and compares them to a table of network addresses. If the received data does not find any match in the table, the ANS drops it.

The switch has the capability to configure the ports with dynamic and static IP addresses.

Virtual LAN Configuration

VLANs enable a network to be partitioned based on the functional requirements. One level of data security is ensured by keeping the data exchanged between devices of a particular VLAN within the same network.

The ANS assigns a VLAN ID to each network based on the location and function of a particular system, or device connected to the ANS. This ensures that only permitted network communication occurs between systems and devices connected to the ANS.

Three VLAN ID exist in the C Series:

- VLAN 201 - HMU, IMS, and flight deck printer
- VLAN 202 - Electronic flight bag (EFB)
- VLAN 203 - Maintenance Ethernet ports

Access Control List

The access control list (ACL) is a set of rules that are applied to a communication port with a list of hosts and/or networks permitted to communicate with each other. The ACL can be configured to control inbound and outbound traffic.

Copyright © Bombardier Inc.

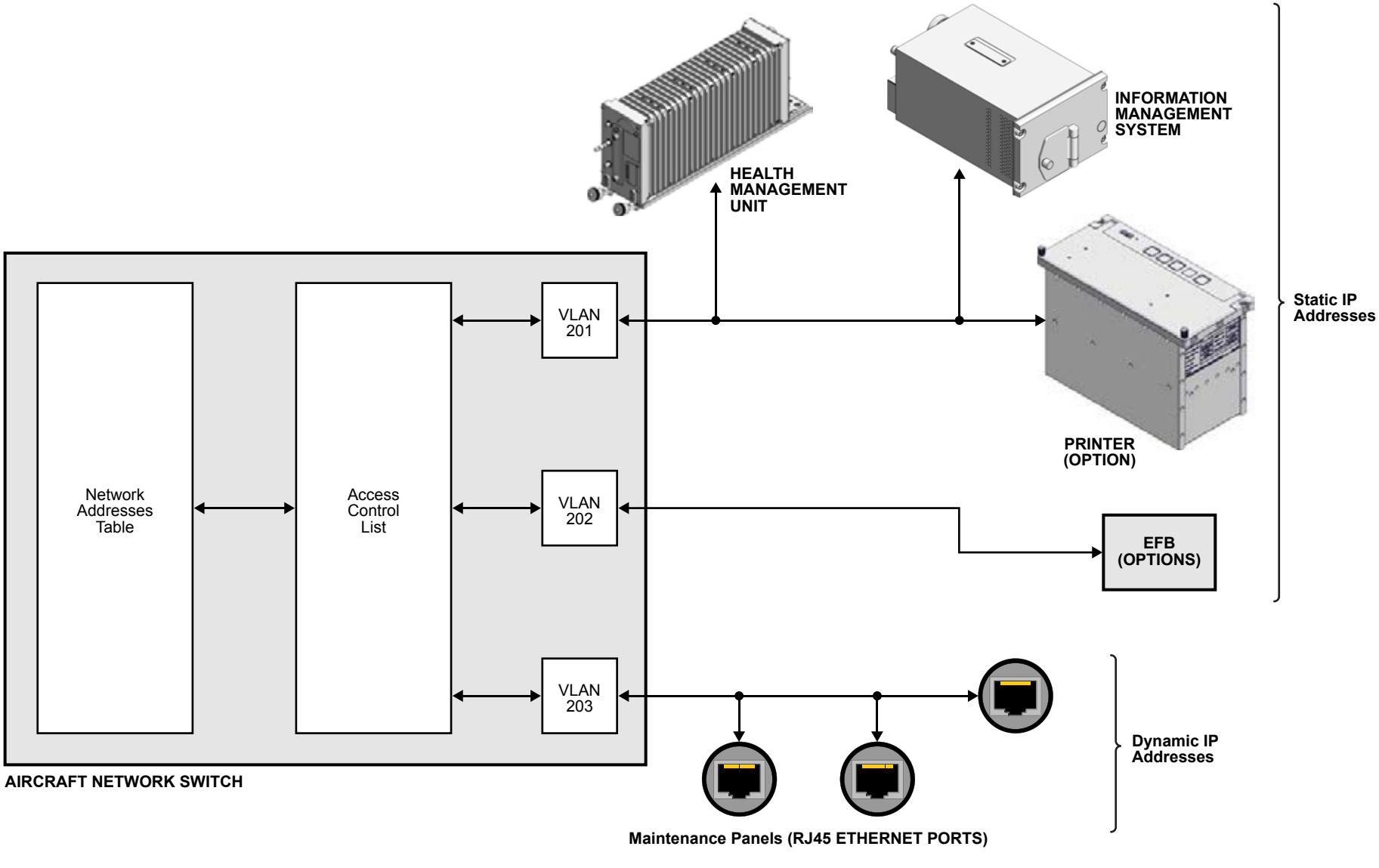

Figure 25: Aircraft Network Switch

MONITORING AND TESTS

The following page provides the crew alerting system (CAS) and INFO messages for the aircraft health management system.

CAS MESSAGES

Table 1: ADVISORY Message

MESSAGE	LOGIC
HI LOAD MONITOR FAIL	A high load detection failed or unreliable.
HI LOAD EVENT	A high load event, either gust or hard landing, has been detected.
HEALTH MGMT FAULT	Generic fault detected in the HMU.

Table 2: STATUS Message

MESSAGE	LOGIC
A/C MAINTENANCE SW	AIRCRAFT switch in UPLOAD or MAINT position.

Table 3: INFO Messages

MESSAGE	LOGIC
46 HI LOAD EVENT - GUST EVENT MODERATE	If channel A or channel B of the HMU sets the vertical or lateral moderate gust bits listed and the associated gust detect bit has been set and the high load event indication option is enabled in the APM.
46 HI LOAD EVENT - GUST EVENT SEVERE	If channel A or channel B of the HMU sets the vertical or lateral severe gust bits listed and the associated gust detect bit has been set and the high load event indication option is enabled in the APM.
46 HI LOAD EVENT - HARD LANDING MODERATE	If channel A or channel B of the HMU sets the hard landing moderate gust bits listed and the associated gust detect bit has been set and the high load event indication option is enabled in the APM.

Table 3: INFO Messages

MESSAGE	LOGIC
46 HI LOAD EVENT - HARD LANDING SEVERE	If channel A or channel B of the HMU sets the hard landing severe gust bits listed and the associated gust detect bit has been set and the high load event indication option is enabled in the APM.
46 HI LOAD EVENT - OUT OF LIMIT LANDING	If channel A or channel B of the HMU sets the out of limits landing or MTOW on landing exceeded bits listed and the high load event indication option is enabled in the APM.
46 HEALTH MGMT FAULT - HMU LATCH ON BATTERY	If DAL A I/O function detects the HMU battery switch is stuck in the NORM position (drawing power from DC EMER BUS 1) and DC EMER BUS is being used.
46 HEALTH MGMT FAULT - HMU DEGRADED	If channel A or channel B of the HMU sets the HMU fault bit and DAL A I/O function detects the HMU battery switch is not stuck in the on position.

Copyright © Bombardier Inc.

PRACTICAL ASPECTS

OMS TESTS

The following ATA 46 Information Systems subsystems can be tested through the OMS:

- Aircraft Network Switch
- Electronic Flight Bag
- HMU CH A
- HMU CH B

Copyright © Bombardier Inc.

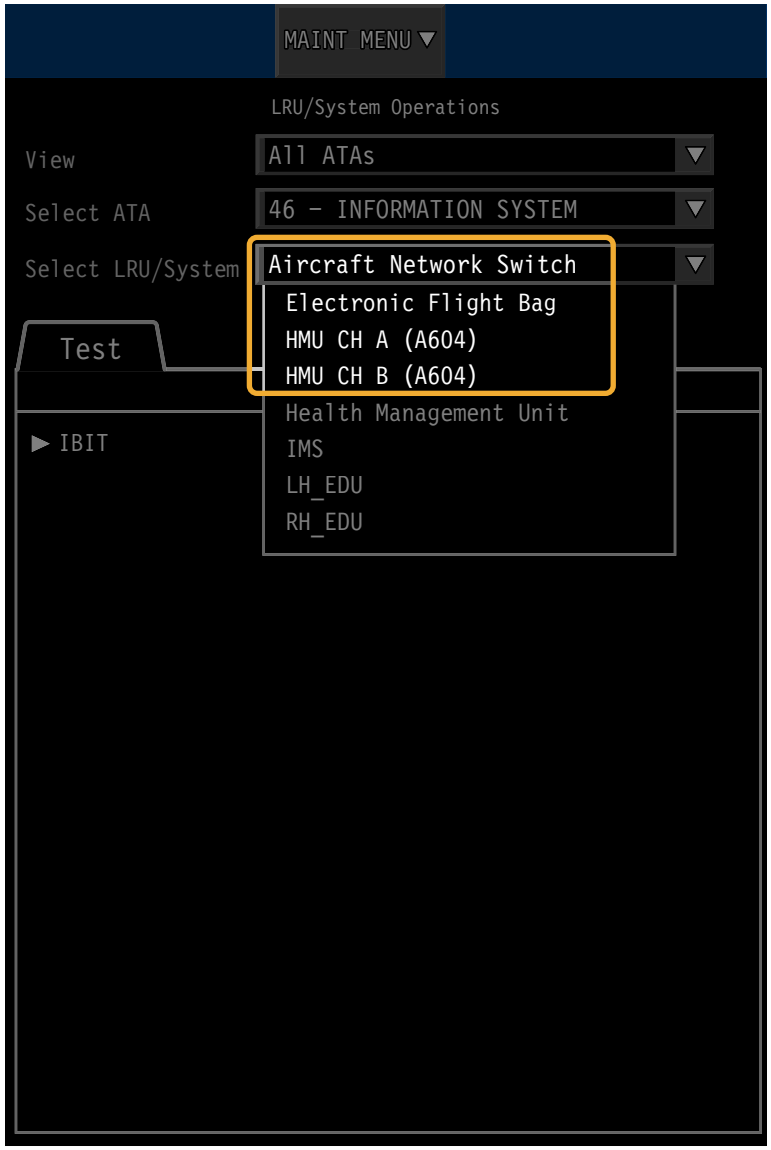

CS1_CS3_4611_011

Figure 26: OMS Tests

HIGH LOAD EVENT ADVISORY RESET

The crew alerting system (CAS) event notification remains latched in the HMU during power interruptions. Clearing the event requires that maintenance personnel consult the HIGH LOAD MONITOR page. This page provides the only means for the mechanic to clear the CAS message after completion of the appropriate aircraft maintenance procedures. This is done by selecting the FCTN menu.

If the HMU is removed or replaced without the event being cleared, the HLEIF event indication remains latched internally and drives a CAS message immediately upon installation in another aircraft.

Copyright © Bombardier Inc.

HIGH LOAD MONITOR PAGE

CS1_CS3_4611_004

Figure 27: High Load Event Advisory Reset

Page Intentionally Left Blank