787 Primary Display System MFD Displays

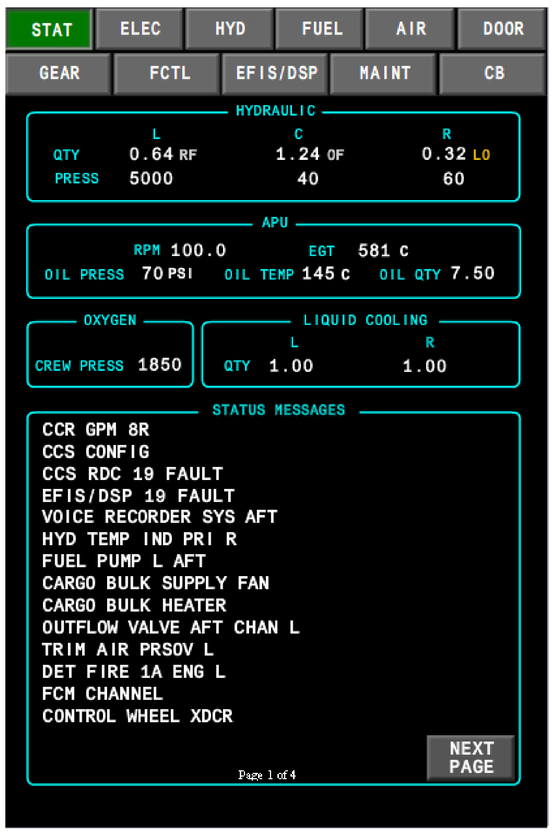

STATUS Page

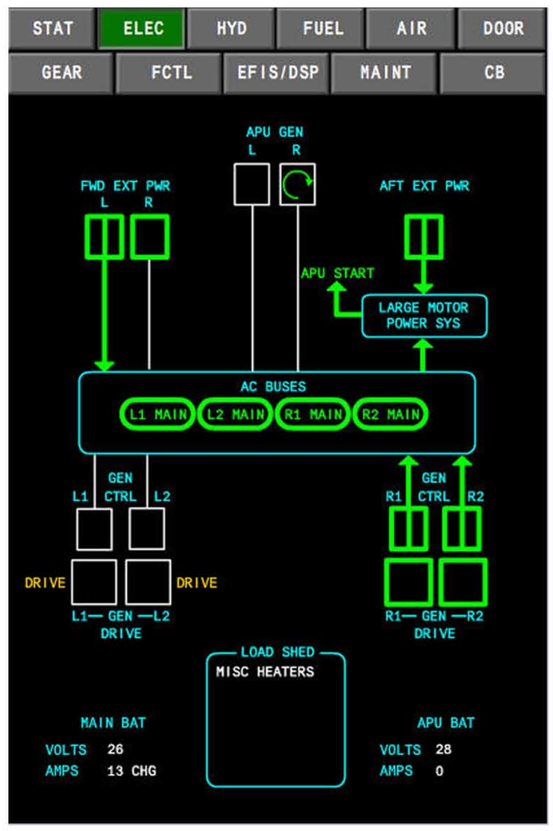

ELECTRICAL Synoptic Page

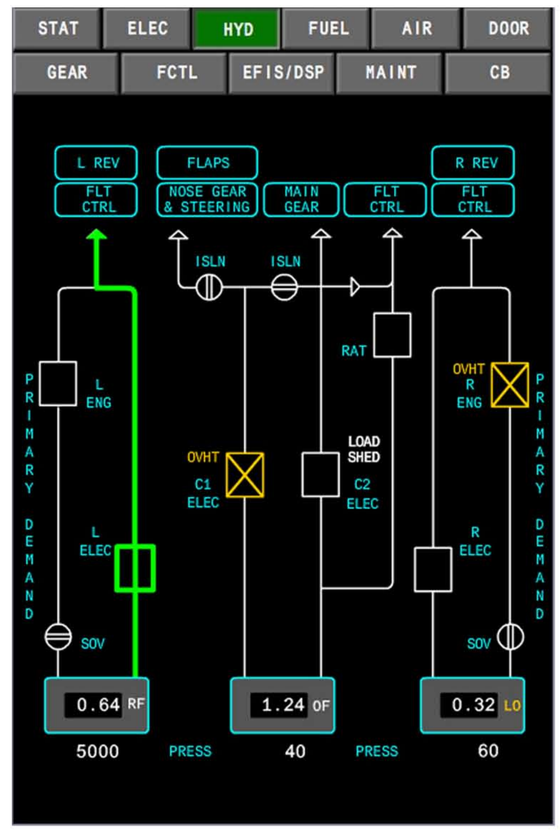

HYDRAULIC Synoptic Page

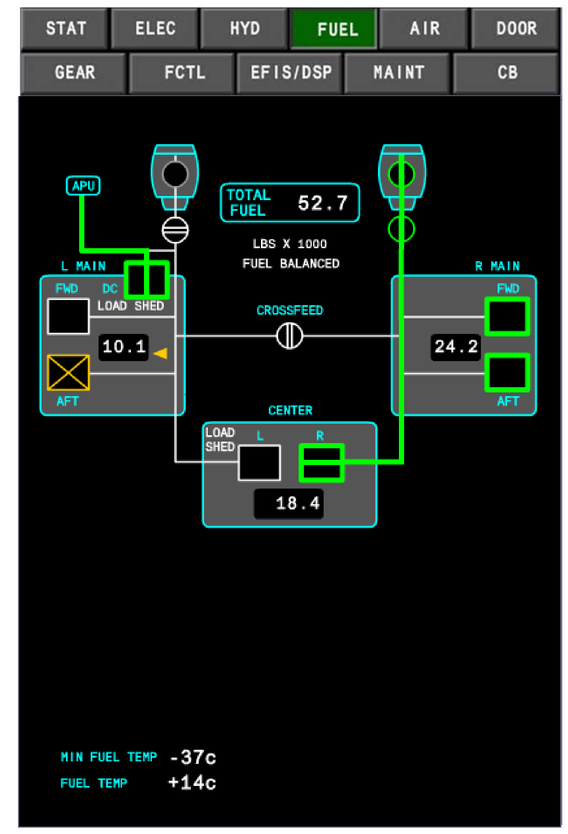

FUEL Synoptic Page

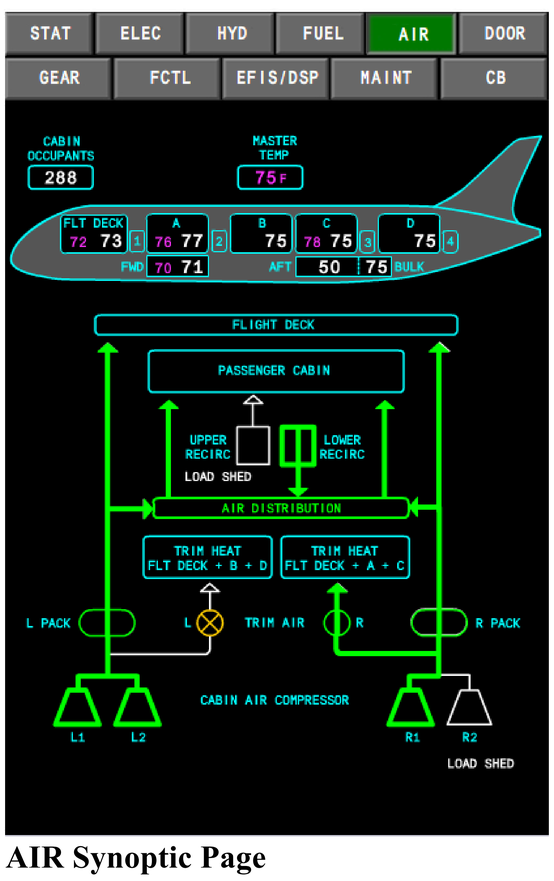

AIR Synoptic Page

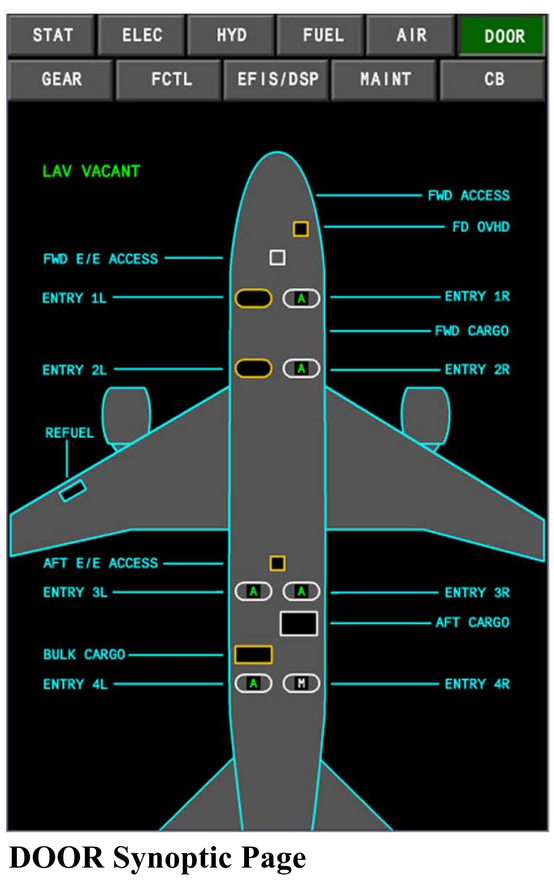

DOOR Synoptic Page

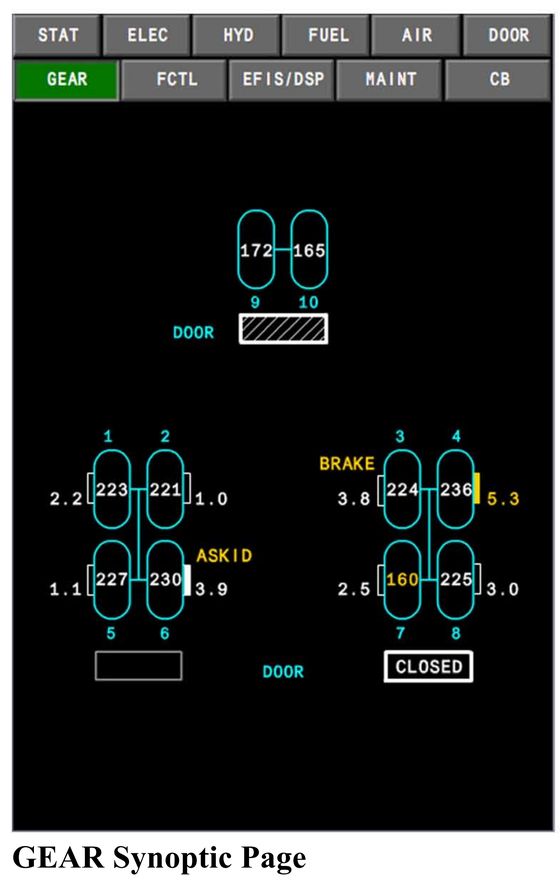

GEAR Synoptic Page

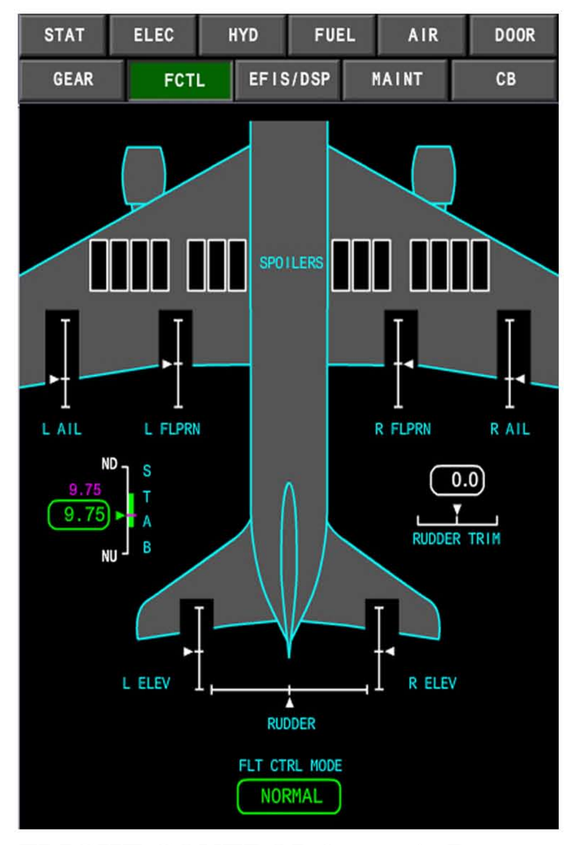

FLIGHT CONTROL Synoptic Page

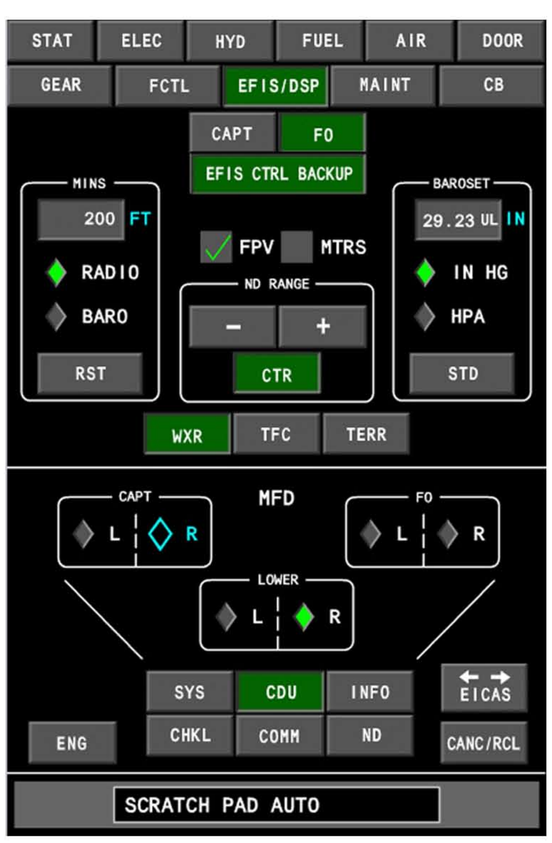

ALTERNATE EFIS/DSP CONTROLS Page

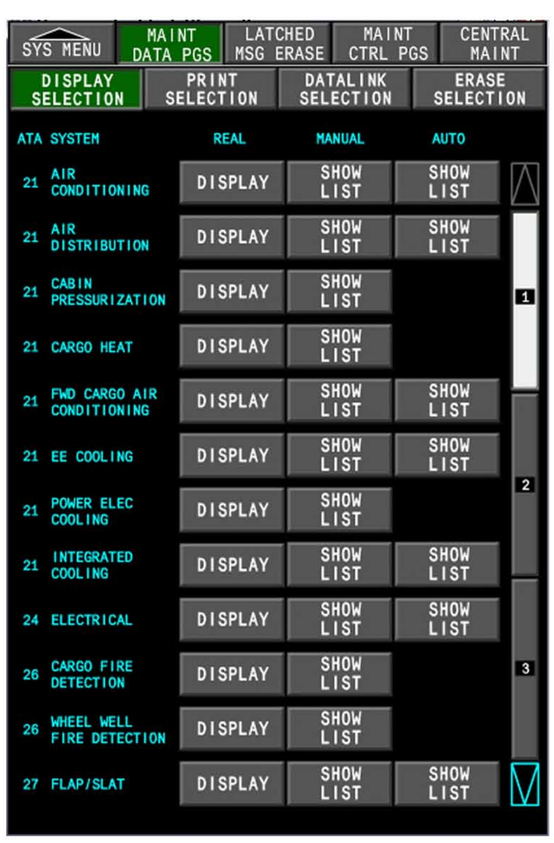

MAINTENANCE CONTROLS MENU Page

CENTRAL MAINTENANCE COMPUTING FUNCTION (CMCF)

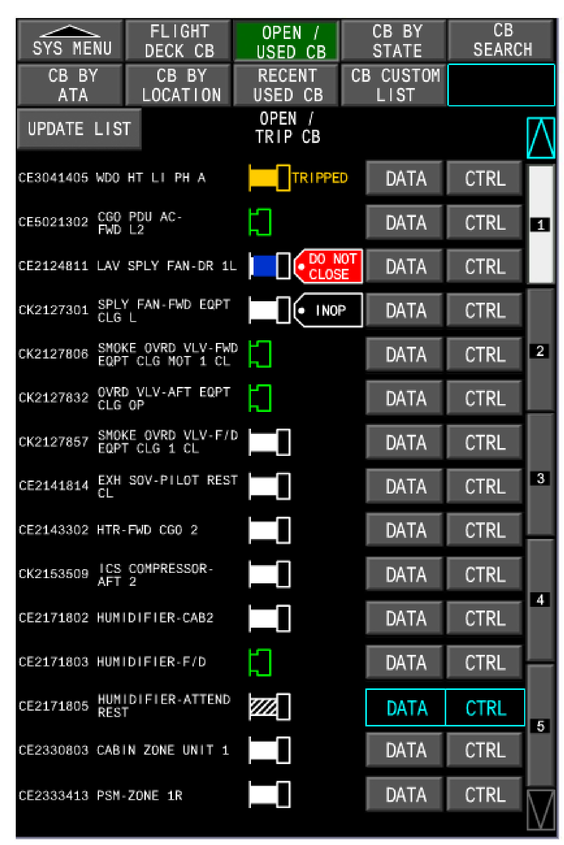

CIRCUIT BREAKER INDICATION AND CONTROL (CBIC) Page