CHAPTER 31

INDICATING / RECORDING SYSTEMS

CHAPTER 31
INDICATING / RECORDING SYSTEMS

CH-SC-SU	Schem	Page	Sheet	Date
31–EFFECTIVE PAGES				
		1 thru 5		Jun 21/2016
		6		BLANK
31–CONTENTS				
R		1		Jun 21/2016
R		2		Jun 21/2016
R		3		Jun 21/2016
R		4		Jun 21/2016
R		5		Jun 21/2016
R		6		Jun 21/2016
R		7		Jun 21/2016
		8		BLANK
31–ALPHABETICAL INDEX				
		1		Oct 14/2014
		2		Apr 17/2014
31-22-11				
		101		Aug 15/2013
R		102		Jun 21/2016
31-31-00				
R		101		Jun 21/2016
31-31-11				
R		101		Jun 21/2016
31-31-13				
		101	1	Aug 15/2013
			2	Nov 18/2013
31-31-13 (cont.)				
		102	1	Mar 14/2016
			2	Mar 14/2016
R		103	1	Jun 21/2016
R			2	Jun 21/2016
31-31-14				
R		101	1	Jun 21/2016
R			2	Jun 21/2016
R			3	Jun 21/2016
31-31-15				
R		101	1	Jun 21/2016
R			2	Jun 21/2016
R			3	Jun 21/2016
31-31-16				
R		101		Jun 21/2016
31-31-17				
		101		Apr 17/2014
R		102		Jun 21/2016
31-32-11				
R		101		Jun 21/2016
		102		Mar 14/2016
31-32-15				
		101		Aug 15/2013
		102		Aug 15/2013

A = Added, R = Revised, D = Deleted, O = Overflow

BOEING PROPRIETARY - Copyright © Unpublished Work - See title page for details

CHAPTER 31
INDICATING / RECORDING SYSTEMS

	CH-SC-SU	Schem	Page	Sheet	Date
	31-32-15 (cont.)				
			103		Nov 18/2013
R			104		Jun 21/2016
	31-32-16				
			101		Aug 15/2013
			102		Nov 18/2013
R			103		Jun 21/2016
	31-32-25				
			101		Aug 15/2013
			102		Aug 15/2013
R			103		Jun 21/2016
	31-32-26				
			101		Aug 15/2013
			102		Aug 15/2013
R			103		Jun 21/2016
	31-32-35				
			101		Aug 15/2013
			102		Aug 15/2013
			103		Apr 17/2014
R			104		Jun 21/2016
	31-33-01				
			101		Apr 17/2014
			102		Mar 14/2016
R			103		Jun 21/2016

	CH-SC-SU	Schem	Page	Sheet	Date
	31-35-01				
			101		Apr 17/2014
R			102		Jun 21/2016
	31-35-02				
R			101		Jun 21/2016
	31-35-03				
R			101		Jun 21/2016
	31-35-04				
R			101		Jun 21/2016
R			102		Jun 21/2016
R			103		Jun 21/2016
	31-35-05				
R			101		Jun 21/2016
	31-35-07				
R			101	1	Jun 21/2016
R				2	Jun 21/2016
R			102	1	Jun 21/2016
R				2	Jun 21/2016
	31-35-08				
R			101		Jun 21/2016
	31-35-09				
R			101		Jun 21/2016
R			102		Jun 21/2016
R			103		Jun 21/2016

A = Added, R = Revised, D = Deleted, O = Overflow

BOEING PROPRIETARY - Copyright © Unpublished Work - See title page for details

CHAPTER 31
INDICATING / RECORDING SYSTEMS

	CH-SC-SU	Schem	Page	Sheet	Date
	31-51-11				
R			101		Jun 21/2016
			102		Mar 14/2016
	31-52-00				
R			101		Jun 21/2016
	31-52-11				
R			101		Jun 21/2016
	31-52-21				
R			101		Jun 21/2016
	31-52-25				
R			101		Jun 21/2016
	31-52-31				
R			101		Jun 21/2016
	31-52-32				
R			101		Jun 21/2016
	31-52-35				
R			101		Jun 21/2016
	31-52-41				
R			101		Jun 21/2016
	31-52-45				
R			101		Jun 21/2016
	31-52-51				
R			101		Jun 21/2016

	CH-SC-SU	Schem	Page	Sheet	Date
	31-52-52				
R			101		Jun 21/2016
	31-52-55				
R			101		Jun 21/2016
	31-52-56				
R			101		Jun 21/2016
	31-52-61				
R			101		Jun 21/2016
	31-52-65				
R			101		Jun 21/2016
	31-52-71				
R			101		Jun 21/2016
R			102		Jun 21/2016
	31-52-75				
R			101		Jun 21/2016
	31-53-11				
R			101		Jun 21/2016
	31-62-11				
R			101		Jun 21/2016
	31-62-12				
R			101		Jun 21/2016
	31-62-13				
R			101		Jun 21/2016

A = Added, R = Revised, D = Deleted, O = Overflow

BOEING PROPRIETARY - Copyright © Unpublished Work - See title page for details

CHAPTER 31
INDICATING / RECORDING SYSTEMS

	CH-SC-SU	Schem	Page	Sheet	Date
	31-62-14				
			101	1	Aug 31/2015
				2	Jan 12/2015
				3	Jan 12/2015
				4	Jan 12/2015
			102	1	Aug 31/2015
				2	Aug 31/2015
				3	Aug 31/2015
				4	Aug 31/2015
R			103	1	Jun 21/2016
R				2	Jun 21/2016
R				3	Jun 21/2016
R				4	Jun 21/2016
	31-62-15				
			101	1	Aug 15/2013
				2	Aug 15/2013
				3	Aug 15/2013
			102	1	Apr 17/2014
				2	Apr 17/2014
				3	Apr 17/2014
			103	1	Mar 14/2016
				2	Mar 14/2016
				3	Mar 14/2016
R			104	1	Jun 21/2016
	31-62-15 (cont.)		104		
R				2	Jun 21/2016
R				3	Jun 21/2016
	31-62-21				
R			101		Jun 21/2016
	31-62-22				
R			101		Jun 21/2016
	31-62-23				
R			101		Jun 21/2016
	31-62-24				
			101	1	Aug 31/2015
				2	Jan 12/2015
				3	Jan 12/2015
				4	Jan 12/2015
			102	1	Aug 31/2015
				2	Aug 31/2015
				3	Aug 31/2015
				4	Aug 31/2015
R			103	1	Jun 21/2016
R				2	Jun 21/2016
R				3	Jun 21/2016
R				4	Jun 21/2016
	31-62-25				
			101	1	Aug 15/2013

A = Added, R = Revised, D = Deleted, O = Overflow

BOEING PROPRIETARY - Copyright © Unpublished Work - See title page for details

CHAPTER 31
INDICATING / RECORDING SYSTEMS

	CH-SC-SU	Schem	Page	Sheet	Date	CH-SC-SU	Schem	Page	Sheet	Date
	31-62-25 (cont.)		101							
				2	Aug 15/2013					
				3	Aug 15/2013					
			102	1	Apr 17/2014					
				2	Apr 17/2014					
				3	Apr 17/2014					
			103	1	Mar 14/2016					
				2	Mar 14/2016					
				3	Mar 14/2016					
R			104	1	Jun 21/2016					
R				2	Jun 21/2016					
R				3	Jun 21/2016					
	31-62-41									
R			101		Jun 21/2016					
	31-62-42									
R			101		Jun 21/2016					

A = Added, R = Revised, D = Deleted, O = Overflow

BOEING PROPRIETARY - Copyright © Unpublished Work - See title page for details

CHAPTER 31
INDICATING / RECORDING SYSTEMS

Title	CH-SC-SU	Schem	Page	Sheet	Date	Effectivity
CLOCK						
ELECTRONIC CLOCK	31-22-11		101		Aug 15/2013	YT101-YT103
			102		Jun 21/2016	YT104-YT133
FLIGHT DATA RECORDER SYSTEM						
DIGITAL FLIGHT DATA RECORDER SYSTEM - (OVER ALL SYSTEM)	31-31-00		101		Jun 21/2016	ALL
DIGITAL FLIGHT DATA RECORDER SYSTEM - INTERFACE	31-31-11		101		Jun 21/2016	ALL
DIGITAL FLIGHT DATA RECORDER SYSTEM - DIGITAL INTERFACE	31-31-13		101	1	Aug 15/2013	YT101-YT103
				2	Nov 18/2013	YT101-YT103
			102	1	Mar 14/2016	YT104 YT106-YT120
				2	Mar 14/2016	YT104 YT106-YT120
			103	1	Jun 21/2016	YT105 YT126-YT133
				2	Jun 21/2016	YT105 YT126-YT133
DIGITAL FLIGHT DATA RECORDER SYSTEM - ANALOG INTERFACE	31-31-14		101	1	Jun 21/2016	ALL
				2	Jun 21/2016	ALL
				3	Jun 21/2016	ALL
DIGITAL FLIGHT DATA RECORDER SYSTEM DISCRETE INTERFACE	31-31-15		101	1	Jun 21/2016	ALL
				2	Jun 21/2016	ALL
				3	Jun 21/2016	ALL
DIGITAL FLIGHT DATA RECORDER SYSTEM AIRPLANE CODING	31-31-16		101		Jun 21/2016	ALL

BOEING PROPRIETARY - Copyright © Unpublished Work - See title page for details

CHAPTER 31
INDICATING / RECORDING SYSTEMS

Title	CH-SC-SU	Schem	Page	Sheet	Date	Effectivity
DIGITAL FLIGHT DATA RECORDER SYSTEM MANDATORY OPTIONS	31-31-17		101		Apr 17/2014	YT101-YT105
			102		Jun 21/2016	YT106-YT133
DATA LOADING AND RECORDING SYSTEM						
DATA LOADER INTERFACES DATA LOADERS	31-32-11		101		Jun 21/2016	YT105 YT126-YT133
			102		Mar 14/2016	YT106-YT120
DATA LOADER INTERFACE (LEFT)	31-32-15		101		Aug 15/2013	YT101
			102		Aug 15/2013	YT102-YT103
			103		Nov 18/2013	YT104
			104		Jun 21/2016	YT105-YT133
OPTIONAL DATA LOADER INTERFACE - LEFT	31-32-16		101		Aug 15/2013	YT101
			102		Nov 18/2013	YT102-YT104
			103		Jun 21/2016	YT105-YT133
DATA LOADER INTERFACE (CENTER)	31-32-25		101		Aug 15/2013	YT101
			102		Aug 15/2013	YT102-YT104
			103		Jun 21/2016	YT105-YT133
OPTIONAL DATA LOADER INTERFACE (CENTER)	31-32-26		101		Aug 15/2013	YT101
			102		Aug 15/2013	YT102-YT104
			103		Jun 21/2016	YT105-YT133
DATA LOADER INTERFACE (RIGHT)	31-32-35		101		Aug 15/2013	YT101
			102		Aug 15/2013	YT102-YT104
			103		Apr 17/2014	YT105
			104		Jun 21/2016	YT106-YT133

BOEING PROPRIETARY - Copyright © Unpublished Work - See title page for details

CHAPTER 31
INDICATING / RECORDING SYSTEMS

Title	CH-SC-SU	Schem	Page	Sheet	Date	Effectivity
FLIGHT COMPARTMENT PRINTING						
PRINTER INTERFACE	31-33-01		101		Apr 17/2014	YT101-YT105
			102		Mar 14/2016	YT106-YT120
			103		Jun 21/2016	YT126-YT133
AIRCRAFT INTEGRATED DATA SYSTEM						
DIGITAL FLIGHT DATA RECORDER SYSTEM - DATA LOADER INTERFACE	31-35-01		101		Apr 17/2014	YT101-YT104
			102		Jun 21/2016	YT105-YT133
DIGITAL FLIGHT DATA RECORDER SYSTEM - ACMS INTERFACE	31-35-02		101		Jun 21/2016	ALL
DIGITAL FLIGHT DATA RECORDER SYSTEM - ACMS INTERFACE	31-35-03		101		Jun 21/2016	ALL
ACMS PARAMETERS - DIGITAL INTERFACE	31-35-04		101		Jun 21/2016	YT101-YT104
			102		Jun 21/2016	YT105-YT115 YT126-YT131
			103		Jun 21/2016	YT116-YT120 YT132-YT133
ACMS PARAMETERS - ANALOG INTERFACE	31-35-05		101		Jun 21/2016	ALL
ACMS DIGITAL INTERFACE GROUP 2	31-35-07		101	1	Jun 21/2016	YT104-YT109 YT126-YT129
				2	Jun 21/2016	YT104-YT109 YT126-YT129
			102	1	Jun 21/2016	YT110-YT120 YT130-YT133
				2	Jun 21/2016	YT110-YT120 YT130-YT133
ACMS DISCRETE INTERFACE GROUP 2	31-35-08		101		Jun 21/2016	YT104-YT133
ACMS NFS INTERFACE	31-35-09		101		Jun 21/2016	YT104
			102		Jun 21/2016	YT105 YT126-YT133
			103		Jun 21/2016	YT106-YT120

BOEING PROPRIETARY - Copyright © Unpublished Work - See title page for details

CHAPTER 31
INDICATING / RECORDING SYSTEMS

Title	CH-SC-SU	Schem	Page	Sheet	Date	Effectivity
AURAL WARNING SYSTEM						
AURAL WARNING SYSTEMS	31-51-11		101		Jun 21/2016	YT101-YT105 YT126-YT133
			102		Mar 14/2016	YT106-YT120
MASTER CAUTION						
MASTER CAUTION SYSTEM- INDEX	31-52-00		101		Jun 21/2016	ALL
MASTER CAUTION SYSTEM- POWER & CONTROL	31-52-11		101		Jun 21/2016	ALL
MASTER CAUTION SYSTEM- HYDRAULIC CONTROL	31-52-21		101		Jun 21/2016	ALL
MASTER CAUTION SYSTEM- FLIGHT CONTROLS	31-52-25		101		Jun 21/2016	ALL
MASTER CAUTION SYSTEM- ELECTRICAL CONTROL, GENERATOR	31-52-31		101		Jun 21/2016	ALL
MASTER CAUTION SYSTEM- ELECTRICAL CONTROL, POWER BUS	31-52-32		101		Jun 21/2016	ALL
MASTER CAUTION SYSTEM- APU CONTROL	31-52-35		101		Jun 21/2016	ALL
MASTER CAUTION SYSTEM- FUEL CONTROL	31-52-41		101		Jun 21/2016	ALL
MASTER CAUTION SYSTEM- OVERHEAT DETECTION	31-52-45		101		Jun 21/2016	ALL
MASTER CAUTION SYSTEM- AIR CONDITIONING CONTROL, PACK & TEMP	31-52-51		101		Jun 21/2016	ALL
MASTER CAUTION SYSTEM- AIR CONDITIONING CONTROL, BLEED AIR	31-52-52		101		Jun 21/2016	ALL
MASTER CAUTION SYSTEM- ANTI-ICE CONTROL, PITOT HEAT	31-52-55		101		Jun 21/2016	ALL
MASTER CAUTION SYSTEM- ANTI-ICE CONTROL, WINDOW/COWL HEAT	31-52-56		101		Jun 21/2016	ALL
MASTER CAUTION SYSTEM- ENGINE CONTROL	31-52-61		101		Jun 21/2016	ALL
MASTER CAUTION SYSTEM- DOOR WARNING	31-52-65		101		Jun 21/2016	ALL

BOEING PROPRIETARY - Copyright © Unpublished Work - See title page for details

CHAPTER 31
INDICATING / RECORDING SYSTEMS

Title	CH-SC-SU	Schem	Page	Sheet	Date	Effectivity
MASTER CAUTION SYSTEM- IRS CONTROL	31-52-71		101		Jun 21/2016	YT101-YT119 YT126-YT129
			102		Jun 21/2016	YT120 YT130-YT133
MASTER CAUTION SYSTEM- OVERHEAD CONTROL	31-52-75		101		Jun 21/2016	ALL
AURAL WARNING - TAKEOFF WARNING						
AURAL WARNING - TAKEOFF WARNING	31-53-11		101		Jun 21/2016	ALL
COMMON DISPLAY SYSTEM						
CDS - POWER DISTRIBUTION AND INSTRUMENT LIGHTING CAPTAINS	31-62-11		101		Jun 21/2016	ALL
CDS - VIDEO COAX SPLITTERS 1 AND 3 DU STATUS	31-62-12		101		Jun 21/2016	ALL
CDS - CONTROL PANEL INTERFACES - CAPTAINS	31-62-13		101		Jun 21/2016	ALL
CDS - DEU 1 ENGINE HYDRAULIC, APU AND FUEL INTERFACES	31-62-14		101	1	Aug 31/2015	YT101-YT109 YT126-YT129
				2	Jan 12/2015	YT101-YT109 YT126-YT129
				3	Jan 12/2015	YT101-YT109 YT126-YT129
				4	Jan 12/2015	YT101-YT109 YT126-YT129
			102	1	Aug 31/2015	YT110-YT115 YT130-YT131
				2	Aug 31/2015	YT110-YT115 YT130-YT131
				3	Aug 31/2015	YT110-YT115 YT130-YT131
				4	Aug 31/2015	YT110-YT115 YT130-YT131
			103	1	Jun 21/2016	YT116-YT120 YT132-YT133
				2	Jun 21/2016	YT116-YT120 YT132-YT133
				3	Jun 21/2016	YT116-YT120 YT132-YT133
				4	Jun 21/2016	YT116-YT120 YT132-YT133

BOEING PROPRIETARY - Copyright © Unpublished Work - See title page for details

CHAPTER 31
INDICATING / RECORDING SYSTEMS

Title	CH-SC-SU	Schem	Page	Sheet	Date	Effectivity
CDS - DEU 1 AVIONICS INTERFACES	31-62-15		101	1	Aug 15/2013	YT101-YT103
				2	Aug 15/2013	YT101-YT103
				3	Aug 15/2013	YT101-YT103
			102	1	Apr 17/2014	YT104-YT105
				2	Apr 17/2014	YT104-YT105
				3	Apr 17/2014	YT104-YT105
			103	1	Mar 14/2016	YT106-YT120
				2	Mar 14/2016	YT106-YT120
				3	Mar 14/2016	YT106-YT120
			104	1	Jun 21/2016	YT126-YT133
				2	Jun 21/2016	YT126-YT133
				3	Jun 21/2016	YT126-YT133
CDS - POWER DISTRIBUTION AND INSTRUMENT LIGHTING FIRST OFFICER	31-62-21		101		Jun 21/2016	ALL
CDS - VIDEO COAX SPLITTERS 2 AND 4 DU STATUS	31-62-22		101		Jun 21/2016	ALL
CDS - CONTROL PANEL INTERFACES F/O	31-62-23		101		Jun 21/2016	ALL
CDS - DEU 2 ENGINE HYDRAULIC, APU AND FUEL INTERFACES	31-62-24		101	1	Aug 31/2015	YT101-YT109 YT126-YT129
				2	Jan 12/2015	YT101-YT109 YT126-YT129
				3	Jan 12/2015	YT101-YT109 YT126-YT129
				4	Jan 12/2015	YT101-YT109 YT126-YT129
			102	1	Aug 31/2015	YT110-YT115 YT130-YT131
				2	Aug 31/2015	YT110-YT115 YT130-YT131

BOEING PROPRIETARY - Copyright © Unpublished Work - See title page for details

CHAPTER 31
INDICATING / RECORDING SYSTEMS

Title	CH-SC-SU	Schem	Page	Sheet	Date	Effectivity
CDS - DEU 2 ENGINE HYDRAULIC, APU AND FUEL INTERFACES (cont.)	31-62-24			3	Aug 31/2015	YT110-YT115 YT130-YT131
				4	Aug 31/2015	YT110-YT115 YT130-YT131
			103	1	Jun 21/2016	YT116-YT120 YT132-YT133
				2	Jun 21/2016	YT116-YT120 YT132-YT133
				3	Jun 21/2016	YT116-YT120 YT132-YT133
				4	Jun 21/2016	YT116-YT120 YT132-YT133
CDS - DEU 2 AVIONICS INTERFACES	31-62-25		101	1	Aug 15/2013	YT101-YT103
				2	Aug 15/2013	YT101-YT103
				3	Aug 15/2013	YT101-YT103
			102	1	Apr 17/2014	YT104-YT105
				2	Apr 17/2014	YT104-YT105
				3	Apr 17/2014	YT104-YT105
			103	1	Mar 14/2016	YT106-YT120
				2	Mar 14/2016	YT106-YT120
				3	Mar 14/2016	YT106-YT120
			104	1	Jun 21/2016	YT126-YT133
				2	Jun 21/2016	YT126-YT133
				3	Jun 21/2016	YT126-YT133
CDS - LRU SELECT AND PROGRAM PINS	31-62-41		101		Jun 21/2016	ALL
CDS - VIDEO MONITORING	31-62-42		101		Jun 21/2016	ALL

BOEING PROPRIETARY - Copyright © Unpublished Work - See title page for details

CHAPTER 31
INDICATING / RECORDING SYSTEMS

CH-SC-SU	Title
31-35-07	ACMS DIGITAL INTERFACE GROUP 2
31-35-08	ACMS DISCRETE INTERFACE GROUP 2
31-35-09	ACMS NFS INTERFACE
31-35-05	ACMS PARAMETERS - ANALOG INTERFACE
31-35-04	ACMS PARAMETERS - DIGITAL INTERFACE
31-53-11	AURAL WARNING - TAKEOFF WARNING
31-51-11	AURAL WARNING SYSTEMS
31-62-13	CDS - CONTROL PANEL INTERFACES - CAPTAINS
31-62-23	CDS - CONTROL PANEL INTERFACES F/O
31-62-15	CDS - DEU 1 AVIONICS INTERFACES
31-62-14	CDS - DEU 1 ENGINE HYDRAULIC, APU AND FUEL INTERFACES
31-62-25	CDS - DEU 2 AVIONICS INTERFACES
31-62-24	CDS - DEU 2 ENGINE HYDRAULIC, APU AND FUEL INTERFACES
31-62-41	CDS - LRU SELECT AND PROGRAM PINS
31-62-11	CDS - POWER DISTRIBUTION AND INSTRUMENT LIGHTING CAPTAINS
31-62-21	CDS - POWER DISTRIBUTION AND INSTRUMENT LIGHTING FIRST OFFICER
31-62-12	CDS - VIDEO COAX SPLITTERS 1 AND 3 DU STATUS

CH-SC-SU	Title
31-62-22	CDS - VIDEO COAX SPLITTERS 2 AND 4 DU STATUS
31-62-42	CDS - VIDEO MONITORING
31-32-25	DATA LOADER INTERFACE (CENTER)
31-32-15	DATA LOADER INTERFACE (LEFT)
31-32-35	DATA LOADER INTERFACE (RIGHT)
31-32-11	DATA LOADER INTERFACES DATA LOADERS
31-31-00	DIGITAL FLIGHT DATA RECORDER SYSTEM - (OVER ALL SYSTEM)
31-35-02	DIGITAL FLIGHT DATA RECORDER SYSTEM - ACMS INTERFACE
31-35-03	DIGITAL FLIGHT DATA RECORDER SYSTEM - ACMS INTERFACE
31-31-14	DIGITAL FLIGHT DATA RECORDER SYSTEM - ANALOG INTERFACE
31-35-01	DIGITAL FLIGHT DATA RECORDER SYSTEM - DATA LOADER INTERFACE
31-31-13	DIGITAL FLIGHT DATA RECORDER SYSTEM - DIGITAL INTERFACE
31-31-11	DIGITAL FLIGHT DATA RECORDER SYSTEM - INTERFACE
31-31-16	DIGITAL FLIGHT DATA RECORDER SYSTEM AIRPLANE CODING

BOEING PROPRIETARY - Copyright © Unpublished Work - See title page for details

CHAPTER 31
INDICATING / RECORDING SYSTEMS

CH-SC-SU	Title
31-31-15	DIGITAL FLIGHT DATA RECORDER SYSTEM DISCRETE INTERFACE
31-31-17	DIGITAL FLIGHT DATA RECORDER SYSTEM MANDATORY OPTIONS
31-22-11	ELECTRONIC CLOCK
31-52-52	MASTER CAUTION SYSTEM- AIR CONDITIONING CONTROL, BLEED AIR
31-52-51	MASTER CAUTION SYSTEM- AIR CONDITIONING CONTROL, PACK & TEMP
31-52-55	MASTER CAUTION SYSTEM- ANTI-ICE CONTROL, PITOT HEAT
31-52-56	MASTER CAUTION SYSTEM- ANTI-ICE CONTROL, WINDOW/COWL HEAT
31-52-35	MASTER CAUTION SYSTEM- APU CONTROL
31-52-65	MASTER CAUTION SYSTEM- DOOR WARNING
31-52-31	MASTER CAUTION SYSTEM- ELECTRICAL CONTROL, GENERATOR
31-52-32	MASTER CAUTION SYSTEM- ELECTRICAL CONTROL, POWER BUS
31-52-61	MASTER CAUTION SYSTEM- ENGINE CONTROL
31-52-25	MASTER CAUTION SYSTEM- FLIGHT CONTROLS
31-52-41	MASTER CAUTION SYSTEM- FUEL CONTROL
31-52-21	MASTER CAUTION SYSTEM- HYDRAULIC CONTROL

CH-SC-SU	Title
31-52-00	MASTER CAUTION SYSTEM- INDEX
31-52-71	MASTER CAUTION SYSTEM- IRS CONTROL
31-52-75	MASTER CAUTION SYSTEM- OVERHEAD CONTROL
31-52-45	MASTER CAUTION SYSTEM- OVERHEAT DETECTION
31-52-11	MASTER CAUTION SYSTEM- POWER & CONTROL
31-32-26	OPTIONAL DATA LOADER INTERFACE (CENTER)
31-32-16	OPTIONAL DATA LOADER INTERFACE - LEFT
31-33-01	PRINTER INTERFACE

BOEING PROPRIETARY - Copyright © Unpublished Work - See title page for details

25

WIRING DIAGRAMS
31-22-11

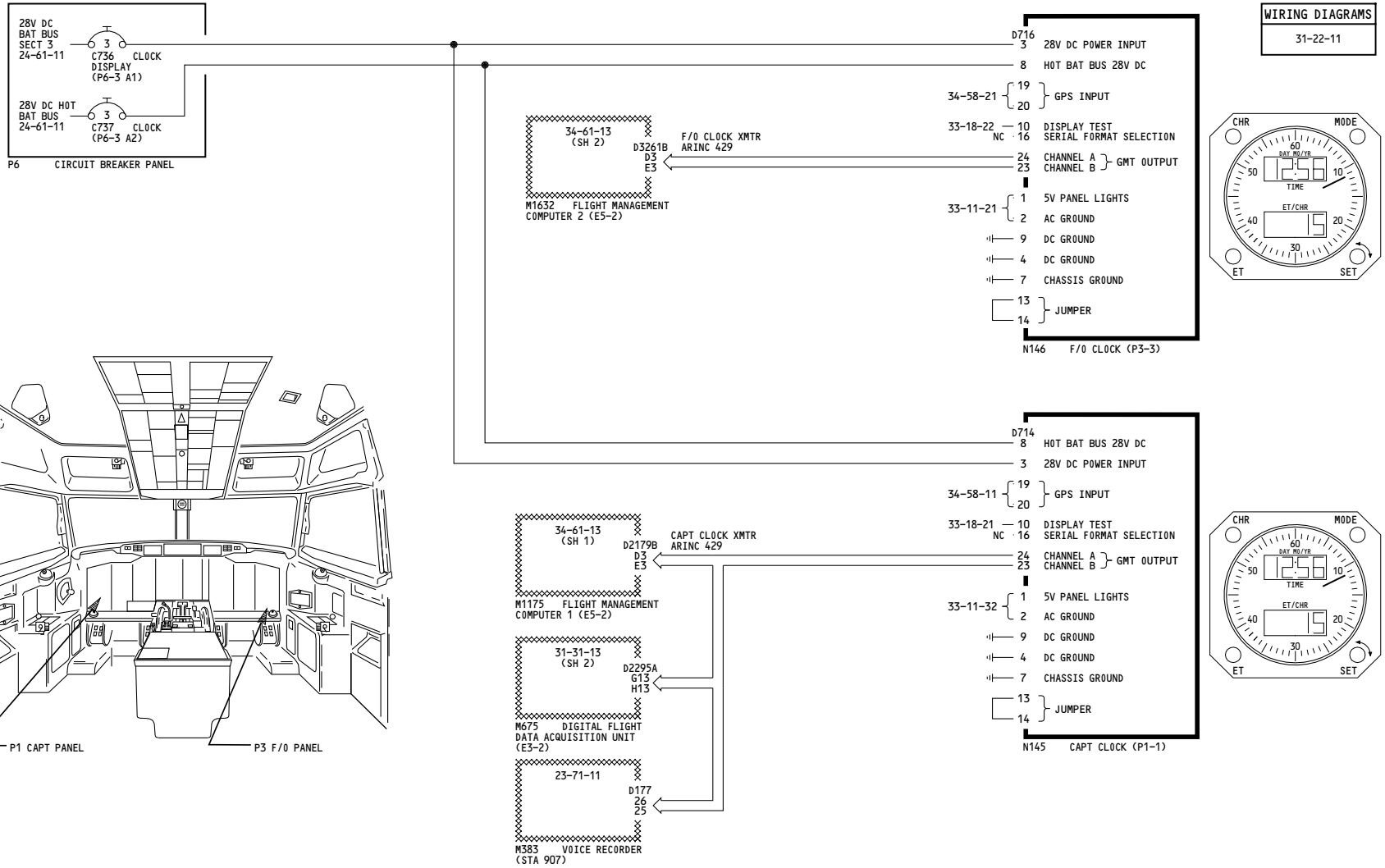

YT101-YT103	ELECTRONIC CLOCK
	D280A451

BOEING PROPRIETARY - Copyright © - Unpublished Work - See title page for details.

-A
40

WIRING DIAGRAMS
31-22-11

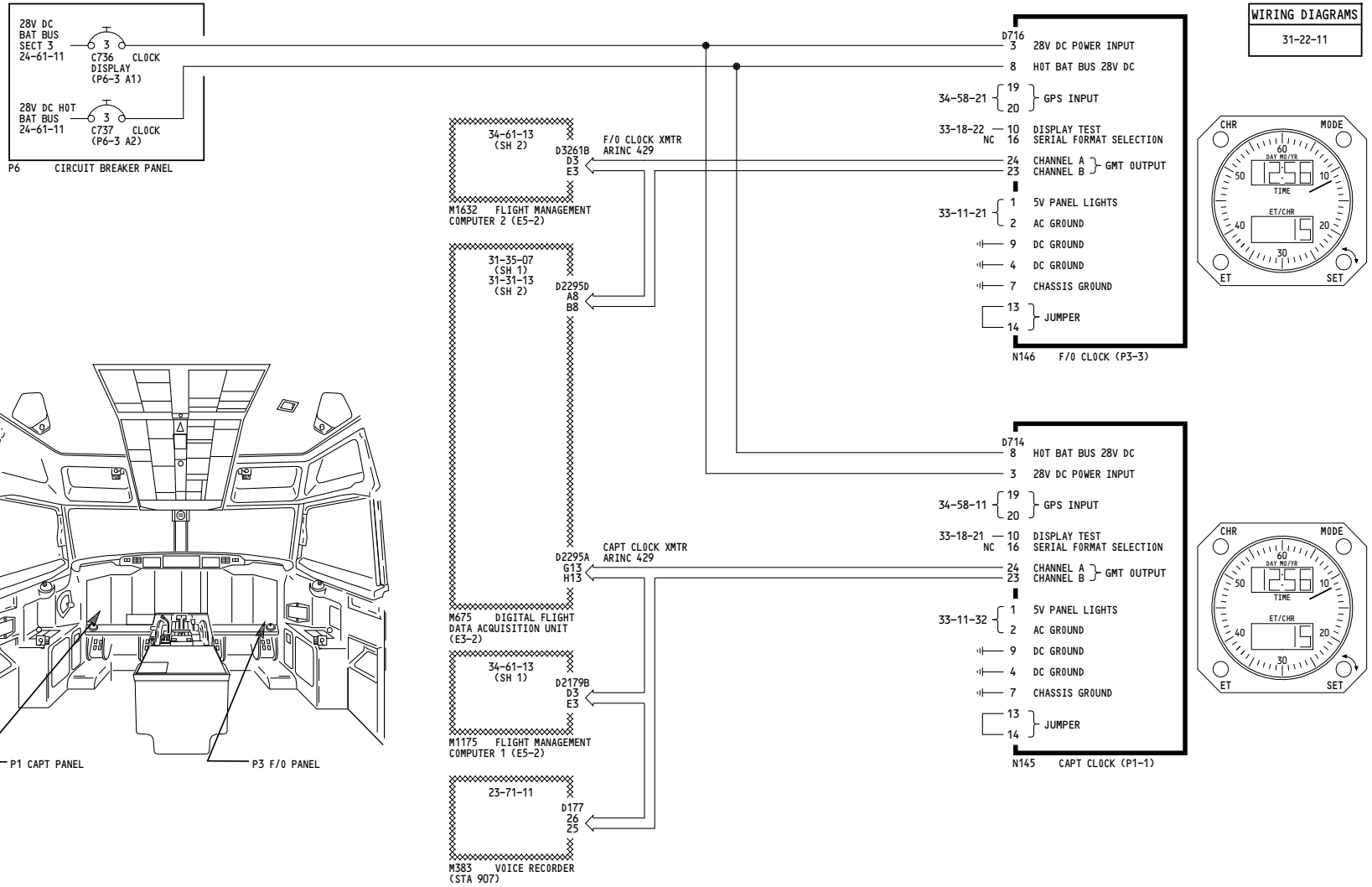

YT104-YT133	ELECTRONIC CLOCK
	D280A451

BOEING PROPRIETARY - Copyright © - Unpublished Work - See title page for details.

-E
1

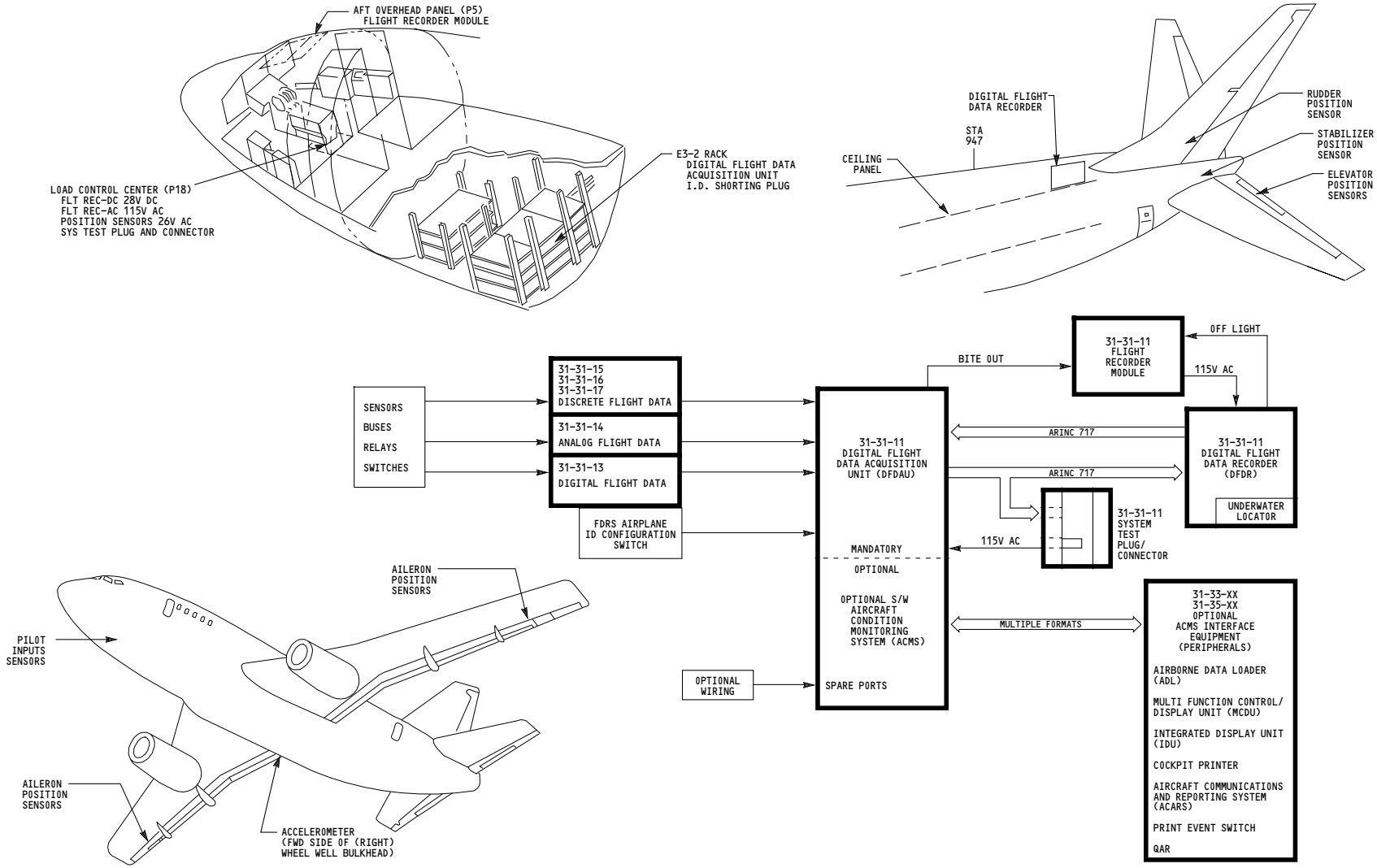

ALL	DIGITAL FLIGHT DATA RECORDER SYSTEM - (OVER ALL SYSTEM) D280A451

BOEING PROPRIETARY - Copyright © - Unpublished Work - See title page for details.

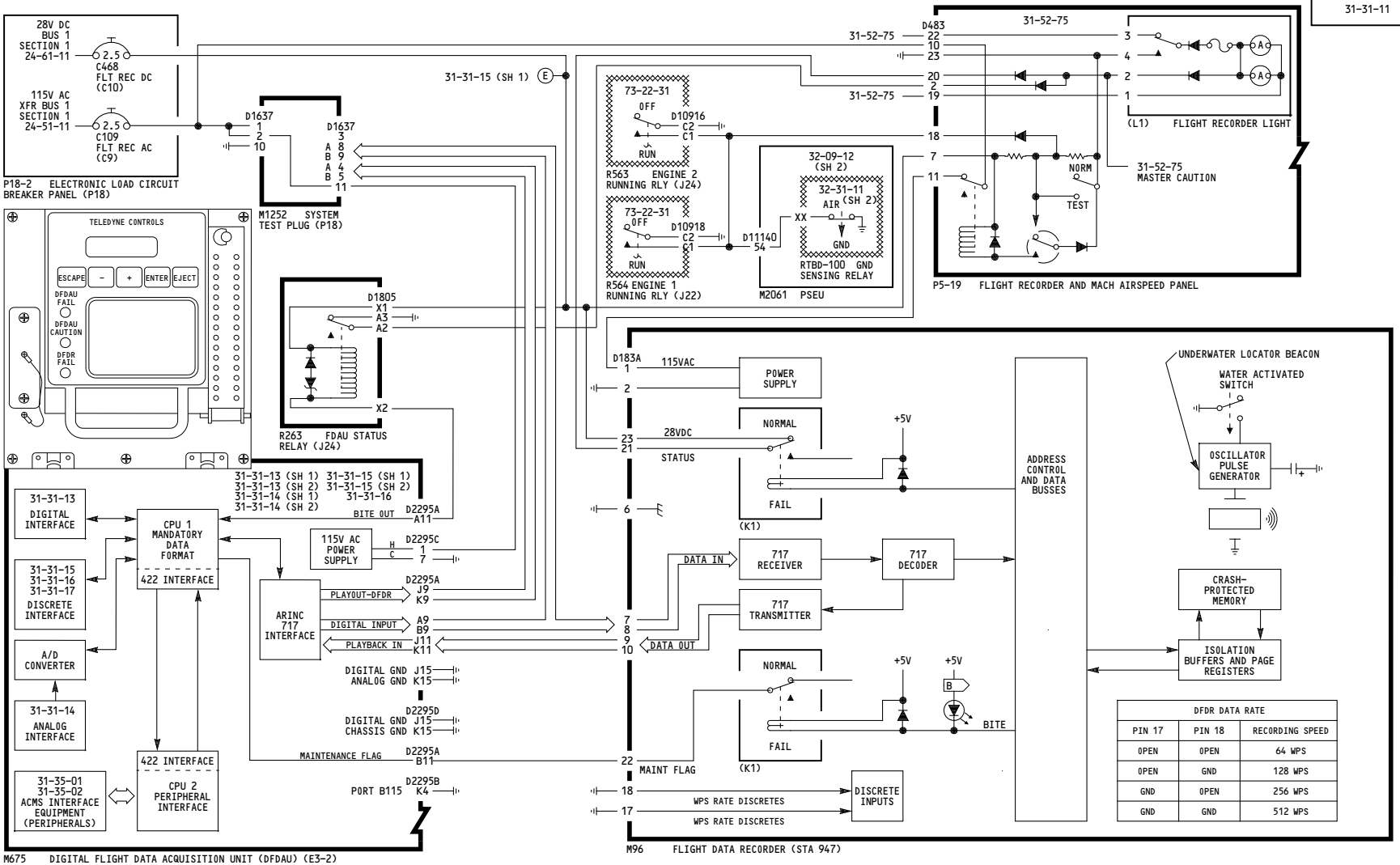

DFDR DATA RATE		
PIN 17	PIN 18	RECORDING SPEED
OPEN	OPEN	64 WPS
OPEN	GND	128 WPS
GND	OPEN	256 WPS
GND	GND	512 WPS

ALL

DIGITAL FLIGHT DATA RECORDER SYSTEM - INTERFACE

D280A451

BOEING PROPRIETARY - Copyright © - Unpublished Work - See title page for details.

THIS PAGE INTENTIONALLY LEFT BLANK

-B
15

WIRING DIAGRAMS

22-31-53 27-32-12
31-31-11 31-31-12
31-31-13 34-26-12
34-26-13 34-26-23
34-49-02

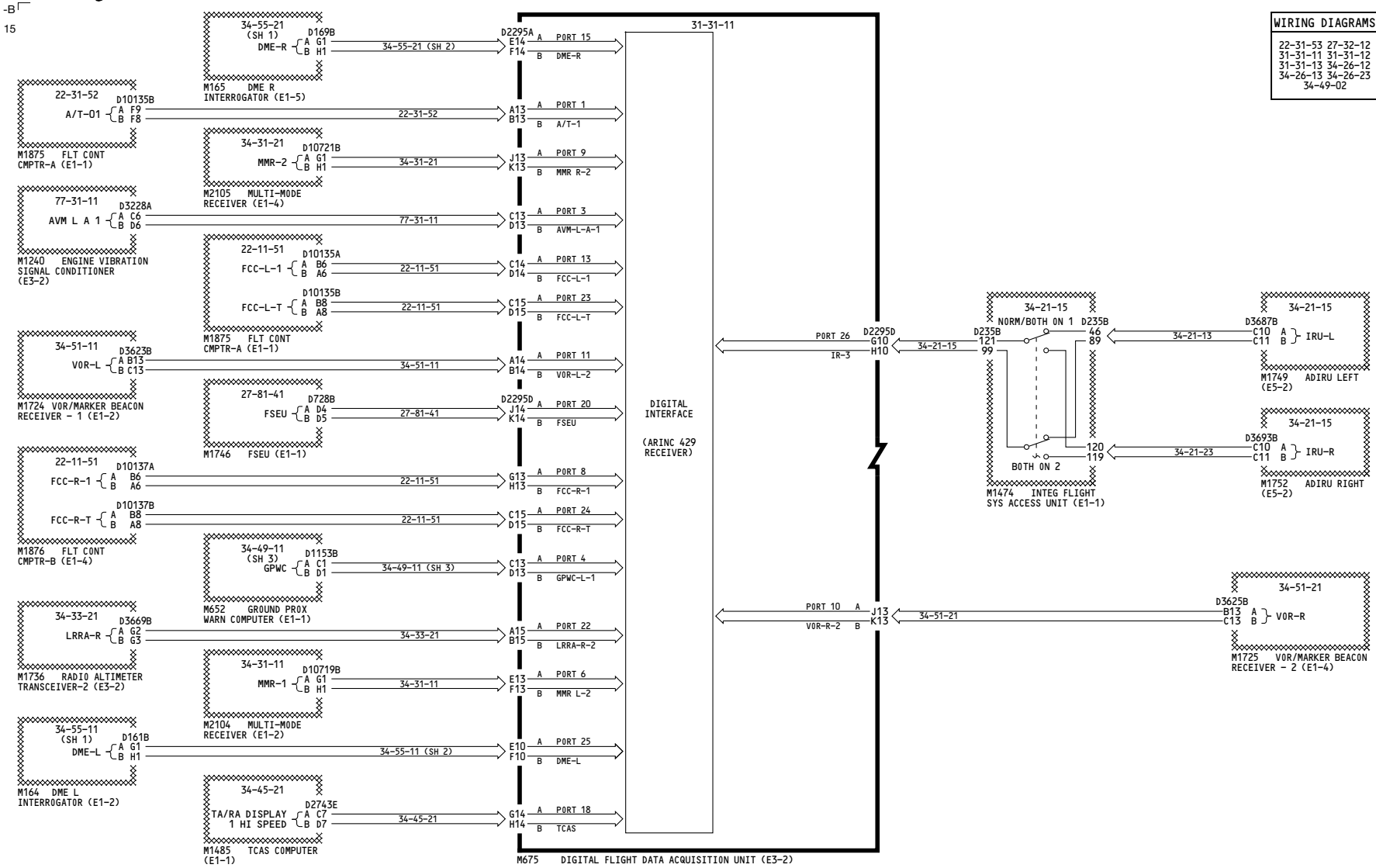

YT101-YT103

DIGITAL FLIGHT DATA RECORDER SYSTEM - DIGITAL INTERFACE

D280A451

31-31-13

BOEING PROPRIETARY - Copyright © - Unpublished Work - See title page for details.

-C
16

WIRING DIAGRAMS
31-31-11 31-31-13 34-45-01 34-61-02 34-61-06 34-61-32 77-12-31

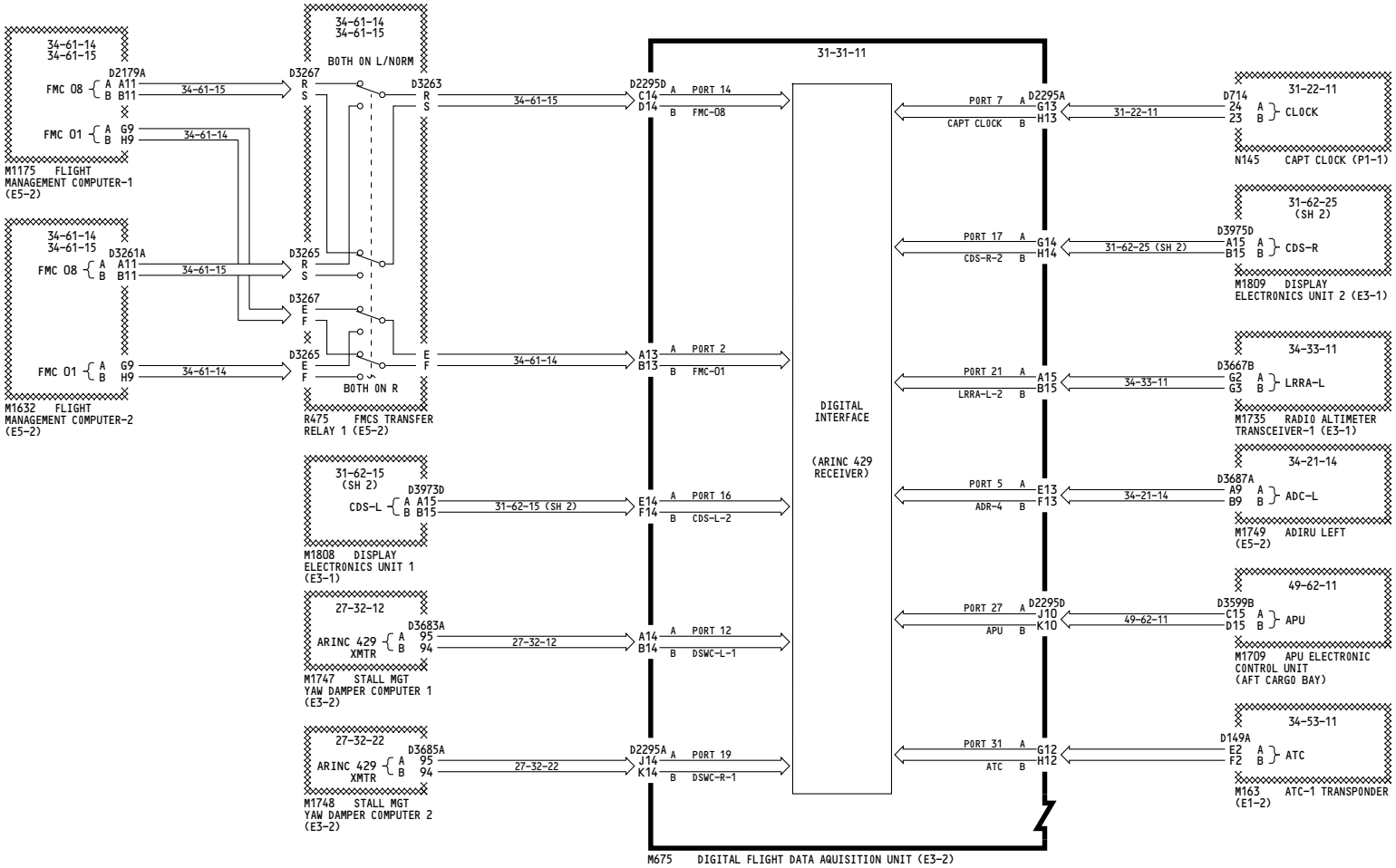

YT101-YT103	DIGITAL FLIGHT DATA RECORDER SYSTEM - DIGITAL INTERFACE D280A451

BOEING PROPRIETARY - Copyright © - Unpublished Work - See title page for details.

-B
15

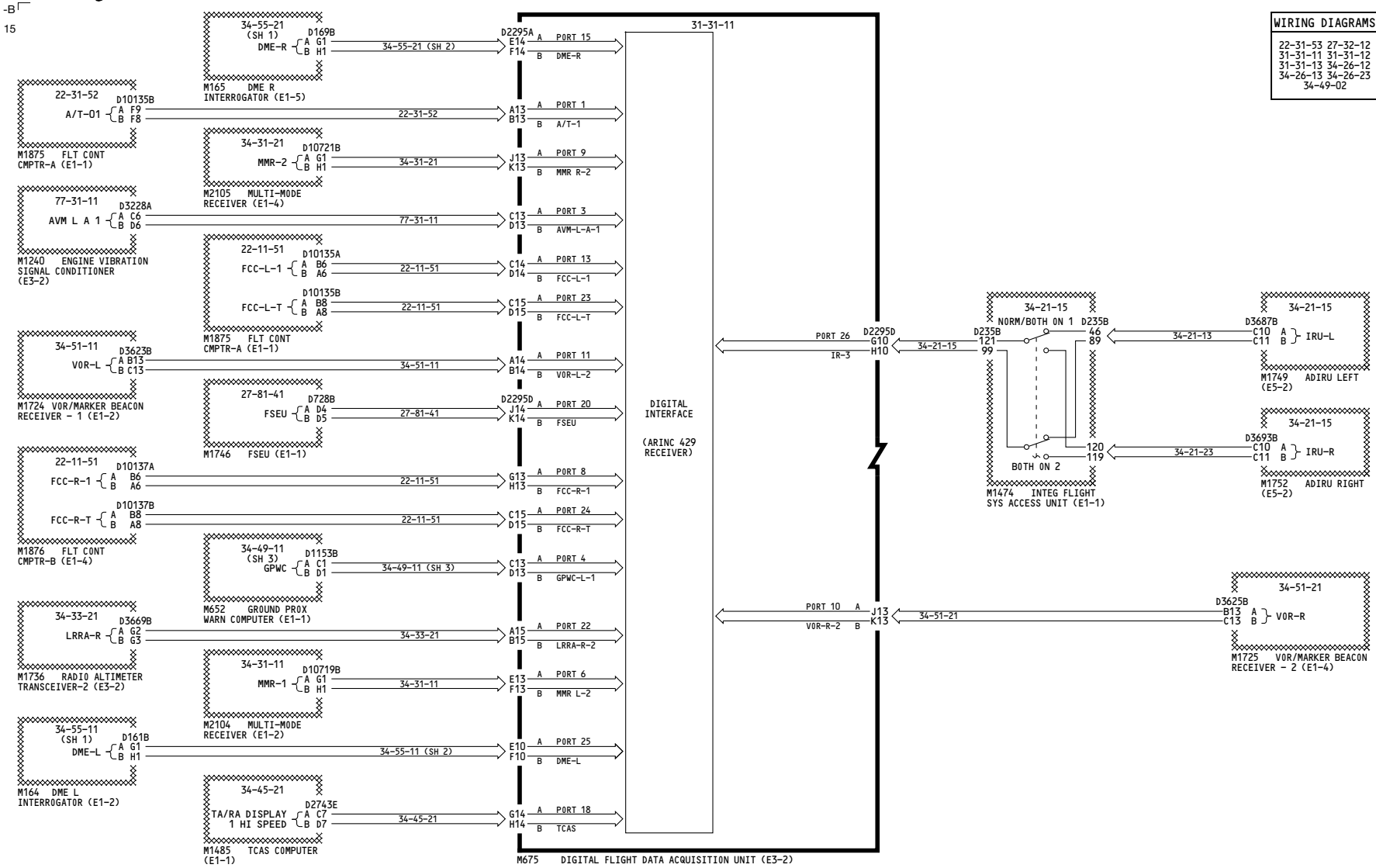

YT104, YT106-YT120

DIGITAL FLIGHT DATA RECORDER SYSTEM - DIGITAL INTERFACE

D280A451

31-31-13

BOEING PROPRIETARY - Copyright © - Unpublished Work - See title page for details.

WIRING DIAGRAMS
31-31-11 31-31-13 34-45-01 34-61-02 34-61-06 34-61-32 77-12-31

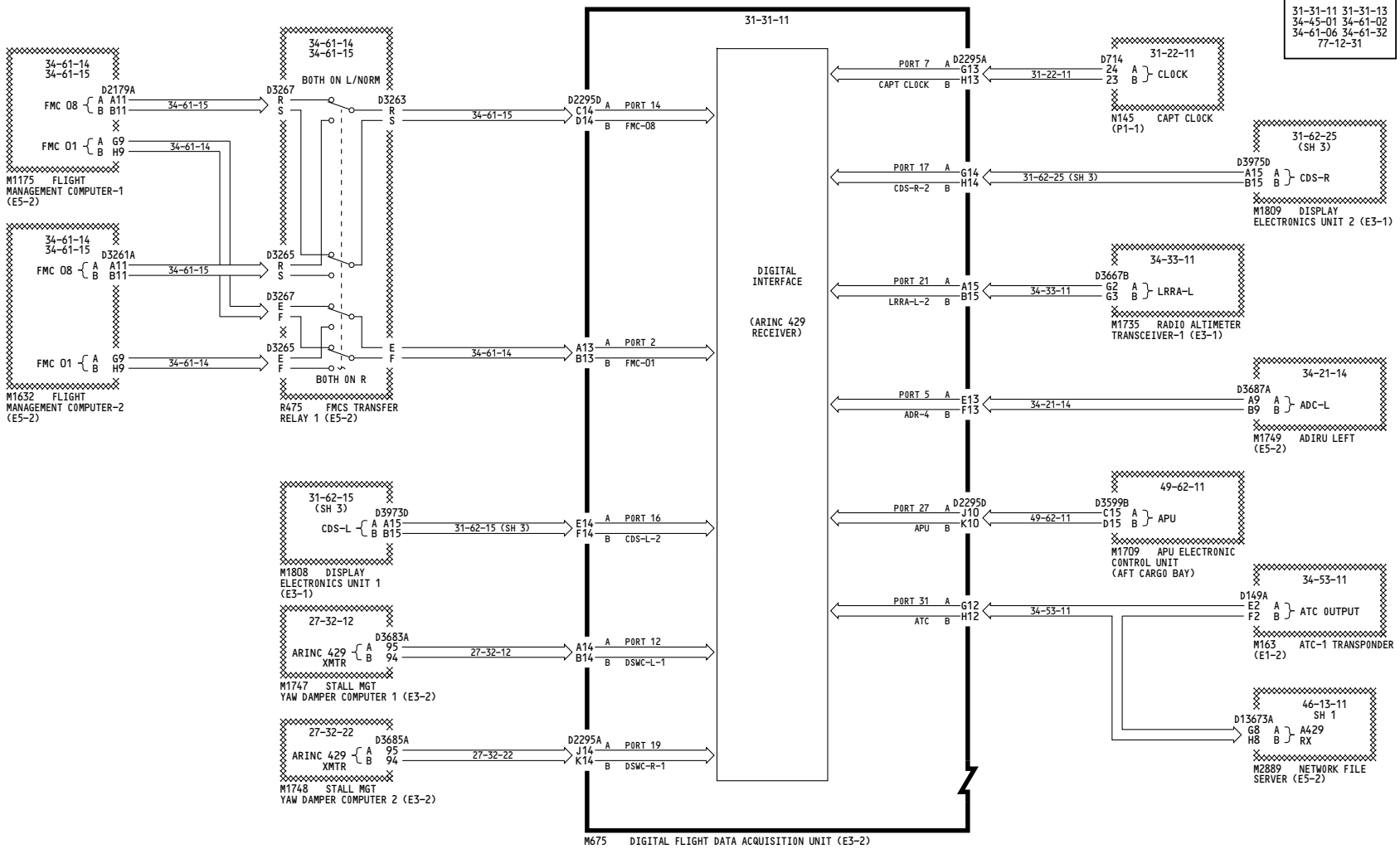

BOEING PROPRIETARY - Copyright © - Unpublished Work - See title page for details.

-B
15

WIRING DIAGRAMS

22-31-53 27-32-12
31-31-11 31-31-12
31-31-13 34-26-12
34-26-13 34-26-23
34-49-02

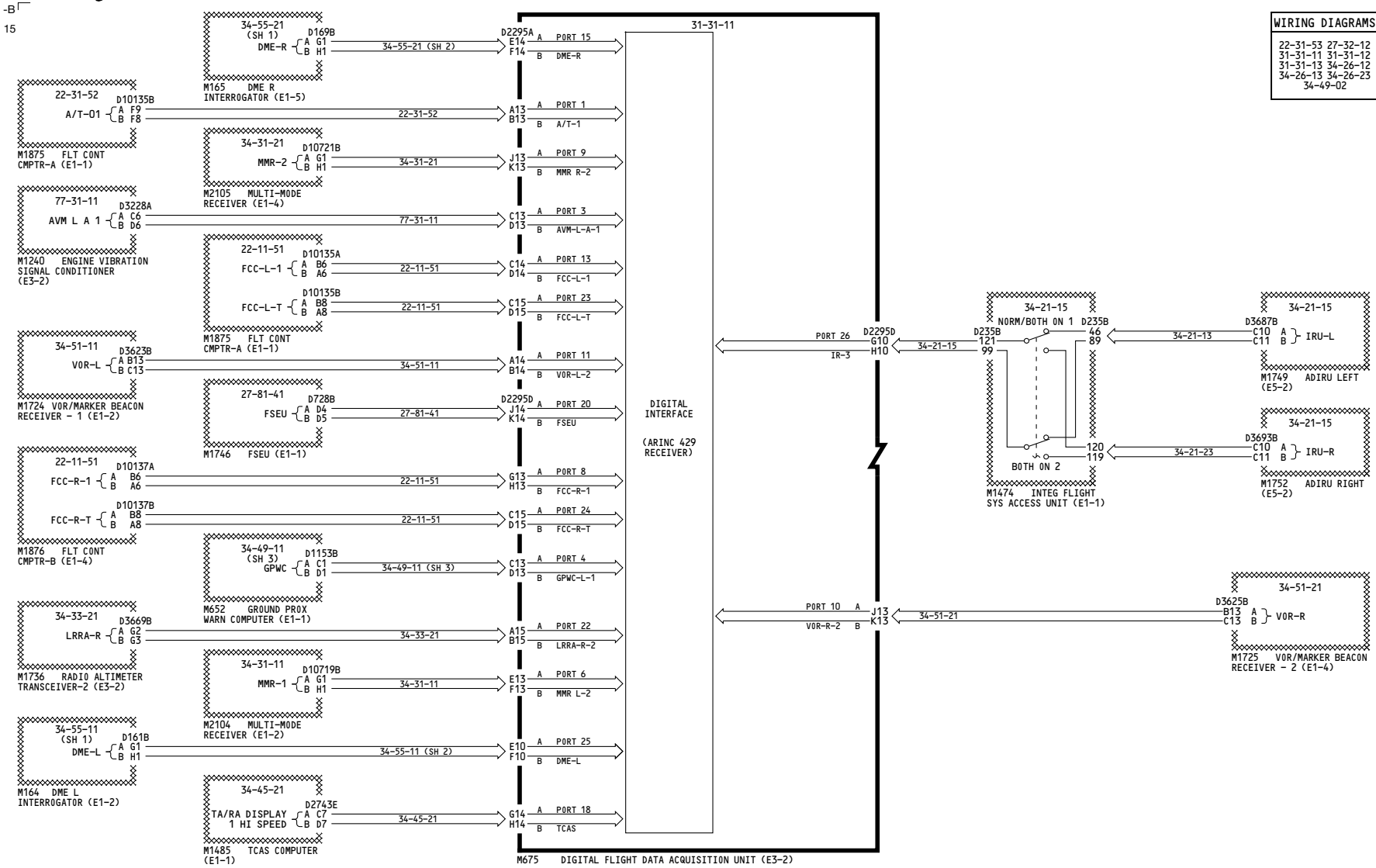

YT105, YT126-YT133	DIGITAL FLIGHT DATA RECORDER SYSTEM - DIGITAL INTERFACE D280A451

BOEING PROPRIETARY - Copyright © - Unpublished Work - See title page for details.

-C
24

WIRING DIAGRAMS
31-31-11 31-31-13 34-45-01 34-61-02 34-61-06 34-61-32 77-12-31

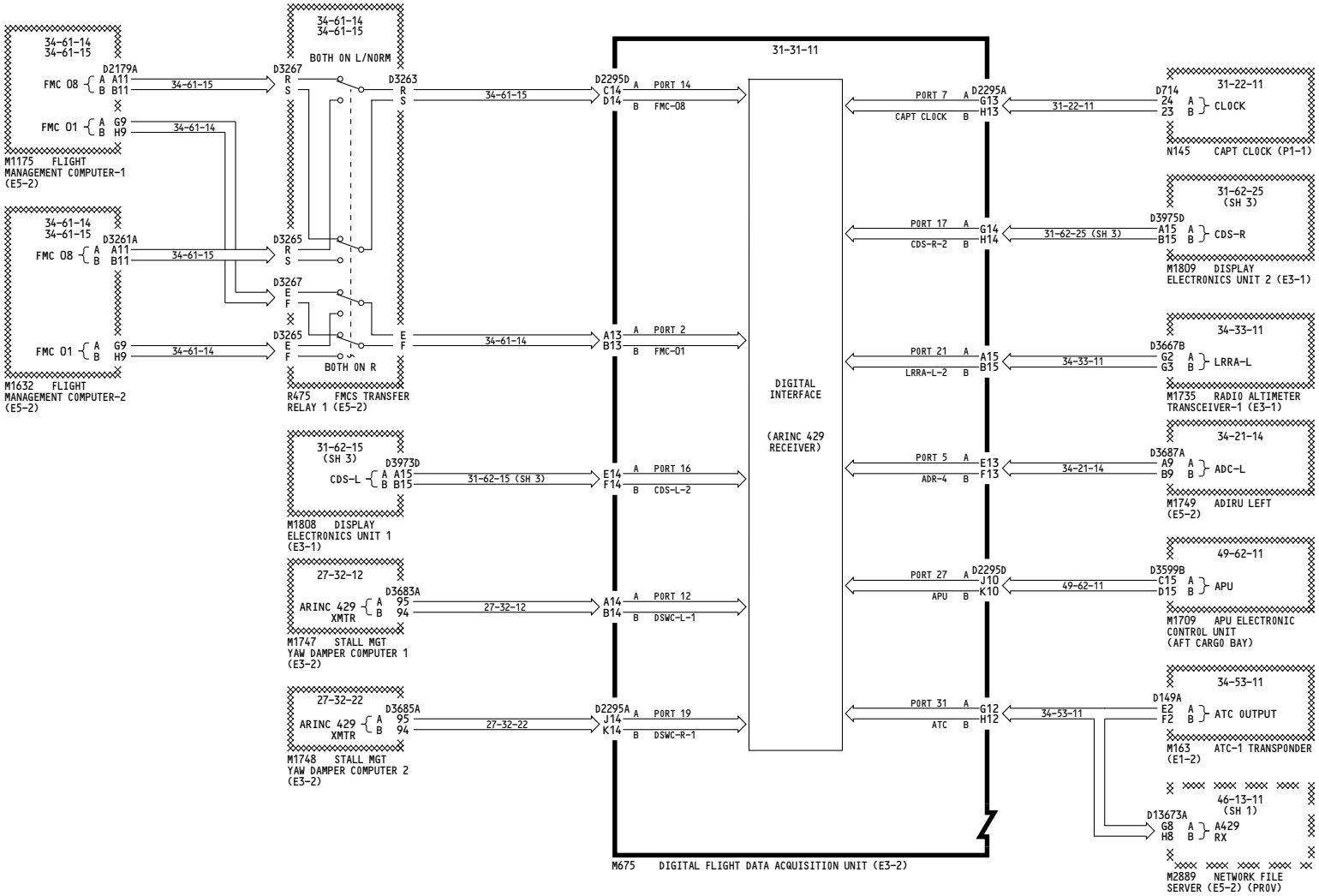

YT105, YT126-YT133	DIGITAL FLIGHT DATA RECORDER SYSTEM - DIGITAL INTERFACE D280A451

BOEING PROPRIETARY - Copyright © - Unpublished Work - See title page for details.

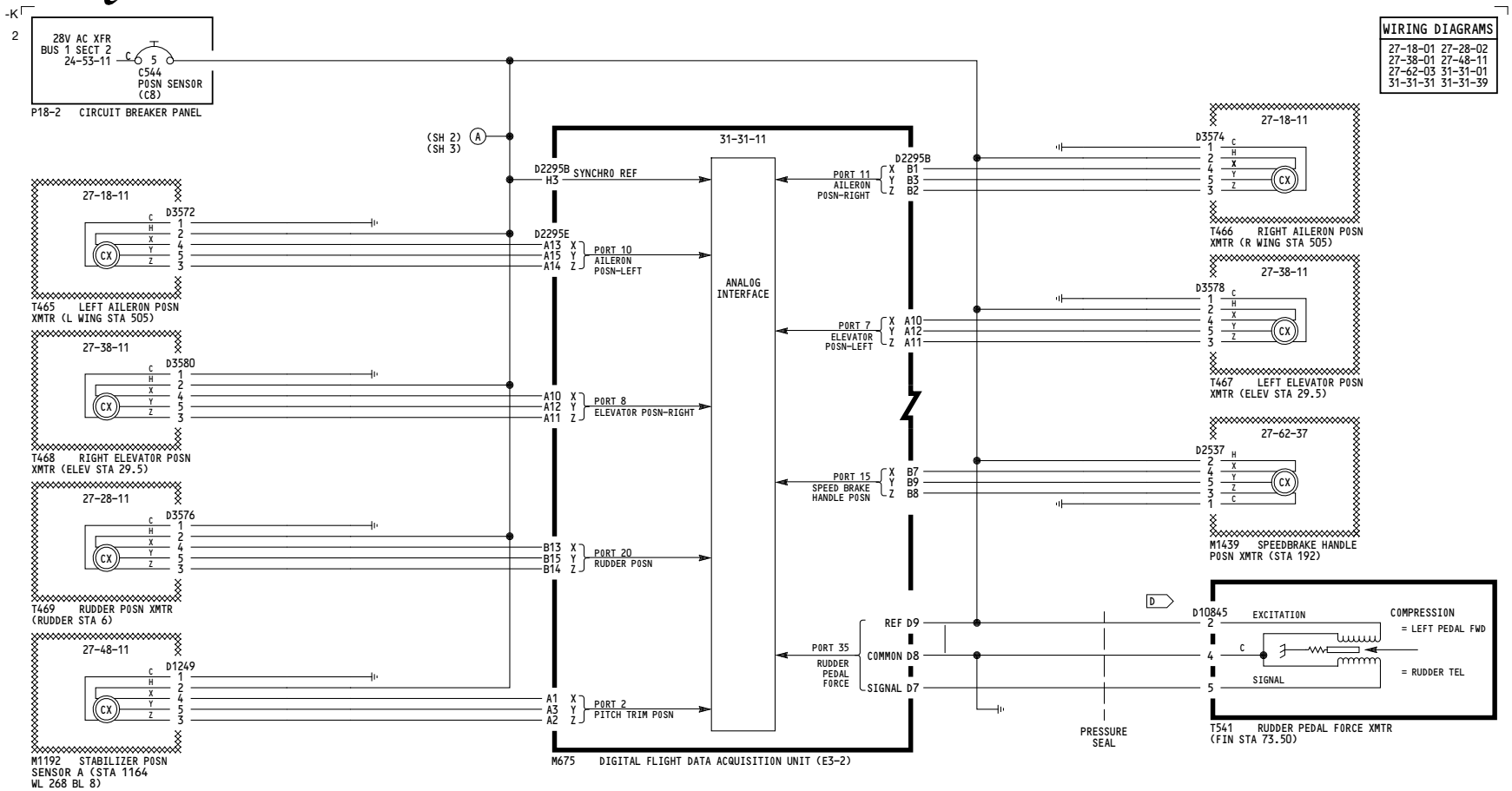

ALL	DIGITAL FLIGHT DATA RECORDER SYSTEM - ANALOG INTERFACE D280A451

BOEING PROPRIETARY - Copyright © - Unpublished Work - See title page for details.

-C
3

WIRING DIAGRAMS
31-31-14

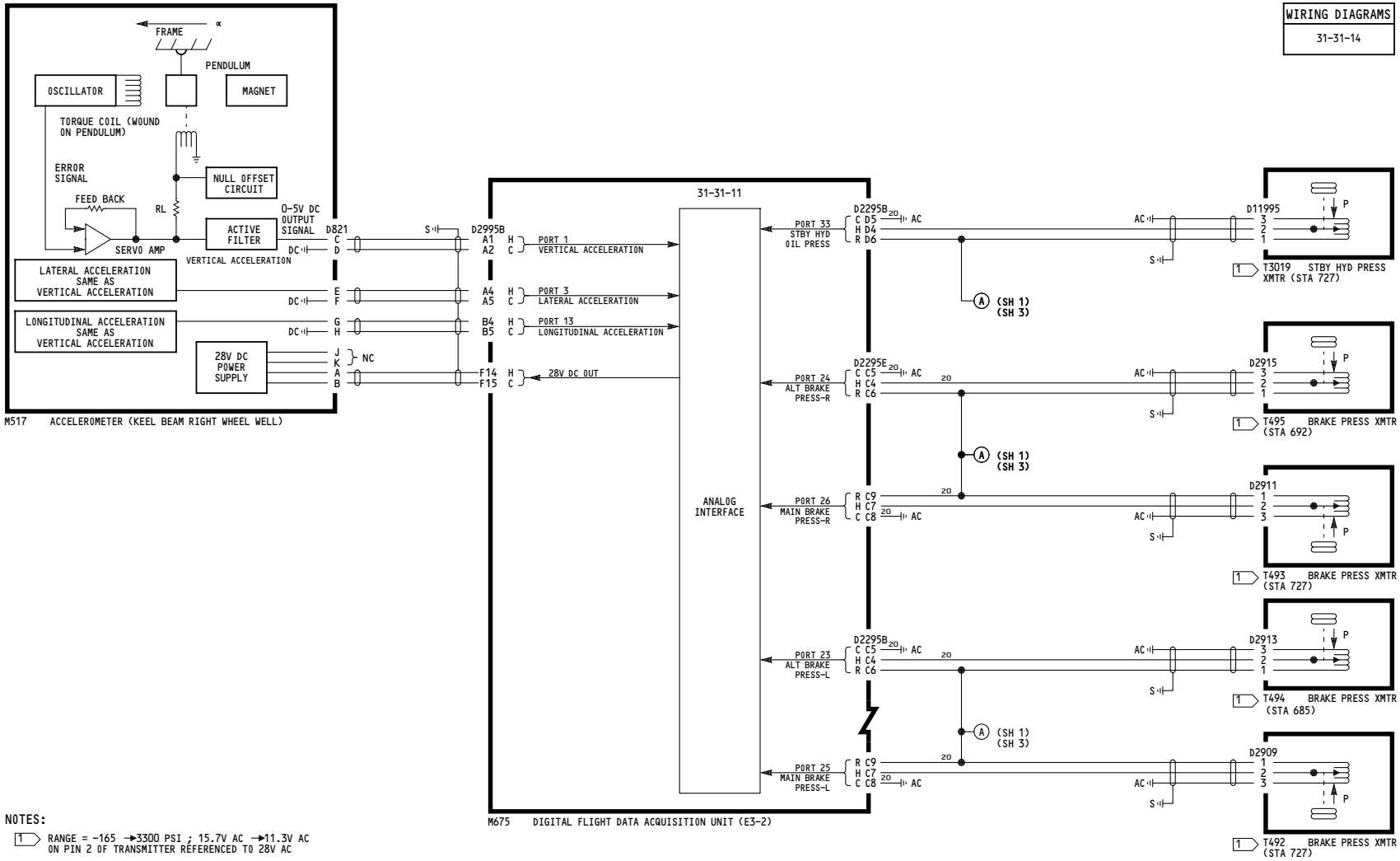

NOTES:

1 RANGE = -165 →3300 PSI ; 15.7V AC →11.3V AC ON PIN 2 OF TRANSMITTER REFERENCED TO 28V AC

ALL	DIGITAL FLIGHT DATA RECORDER SYSTEM - ANALOG INTERFACE D280A451

BOEING PROPRIETARY - Copyright © - Unpublished Work - See title page for details.

WIRING DIAGRAMS
27-24-11 27-62-14 31-31-14

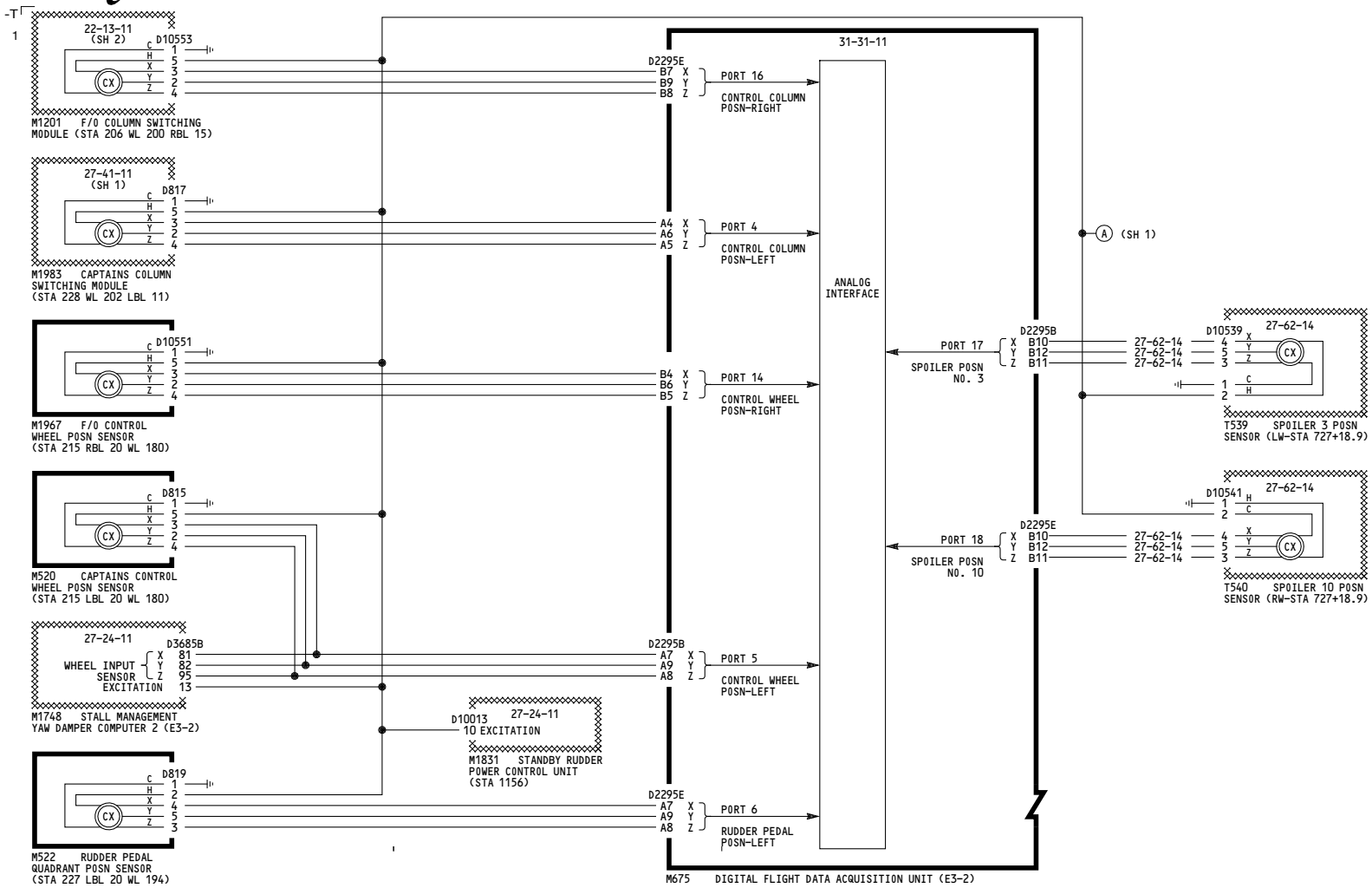

ALL	DIGITAL FLIGHT DATA RECORDER SYSTEM - ANALOG INTERFACE D280A451

BOEING PROPRIETARY - Copyright © - Unpublished Work - See title page for details.

THIS PAGE INTENTIONALLY LEFT BLANK

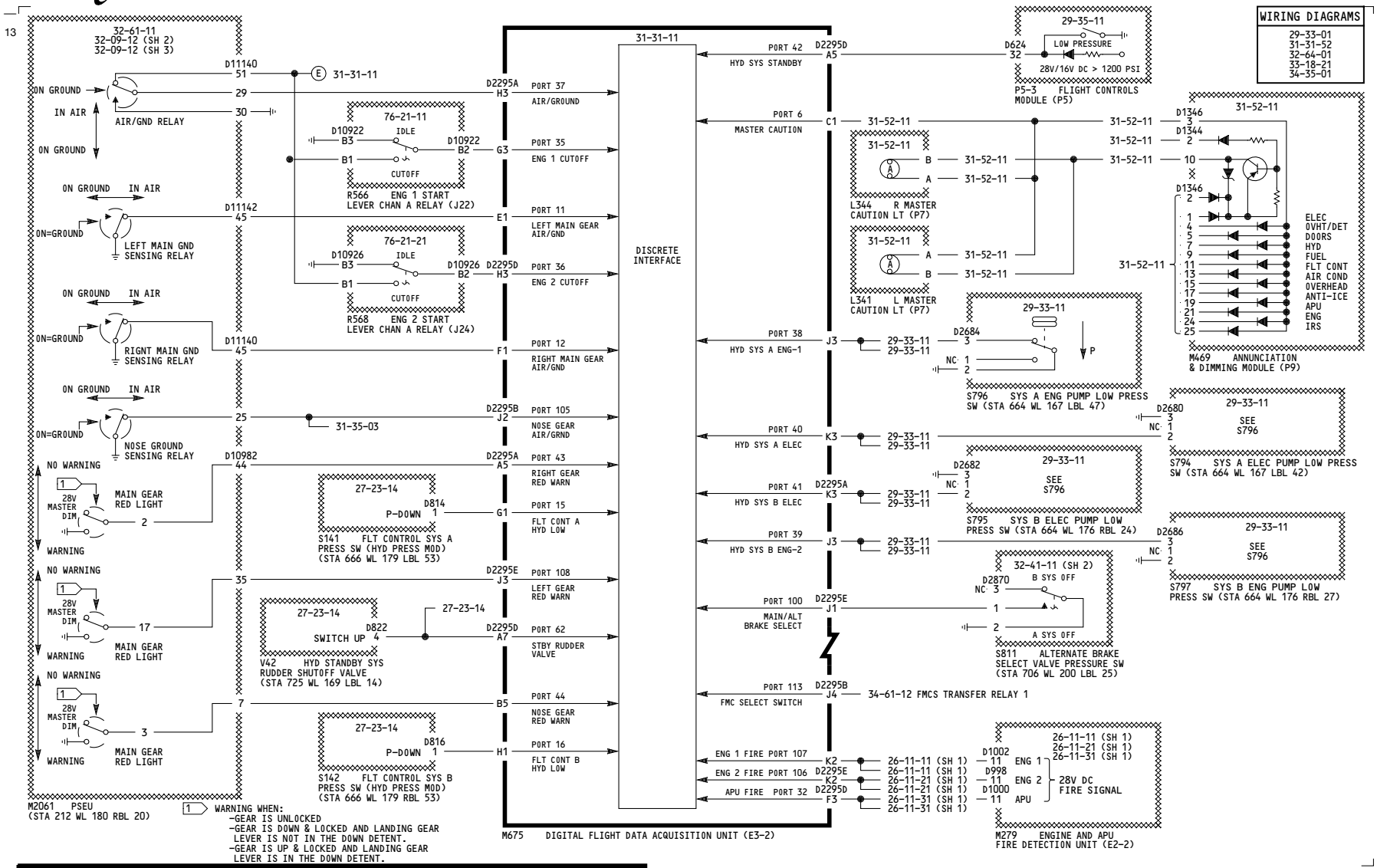

WIRING DIAGRAMS
29-33-01
31-31-52
32-64-01
33-18-21
34-35-01

ALL

DIGITAL FLIGHT DATA RECORDER SYSTEM DISCRETE INTERFACE

D280A451

BOEING PROPRIETARY - Copyright © - Unpublished Work - See title page for details.

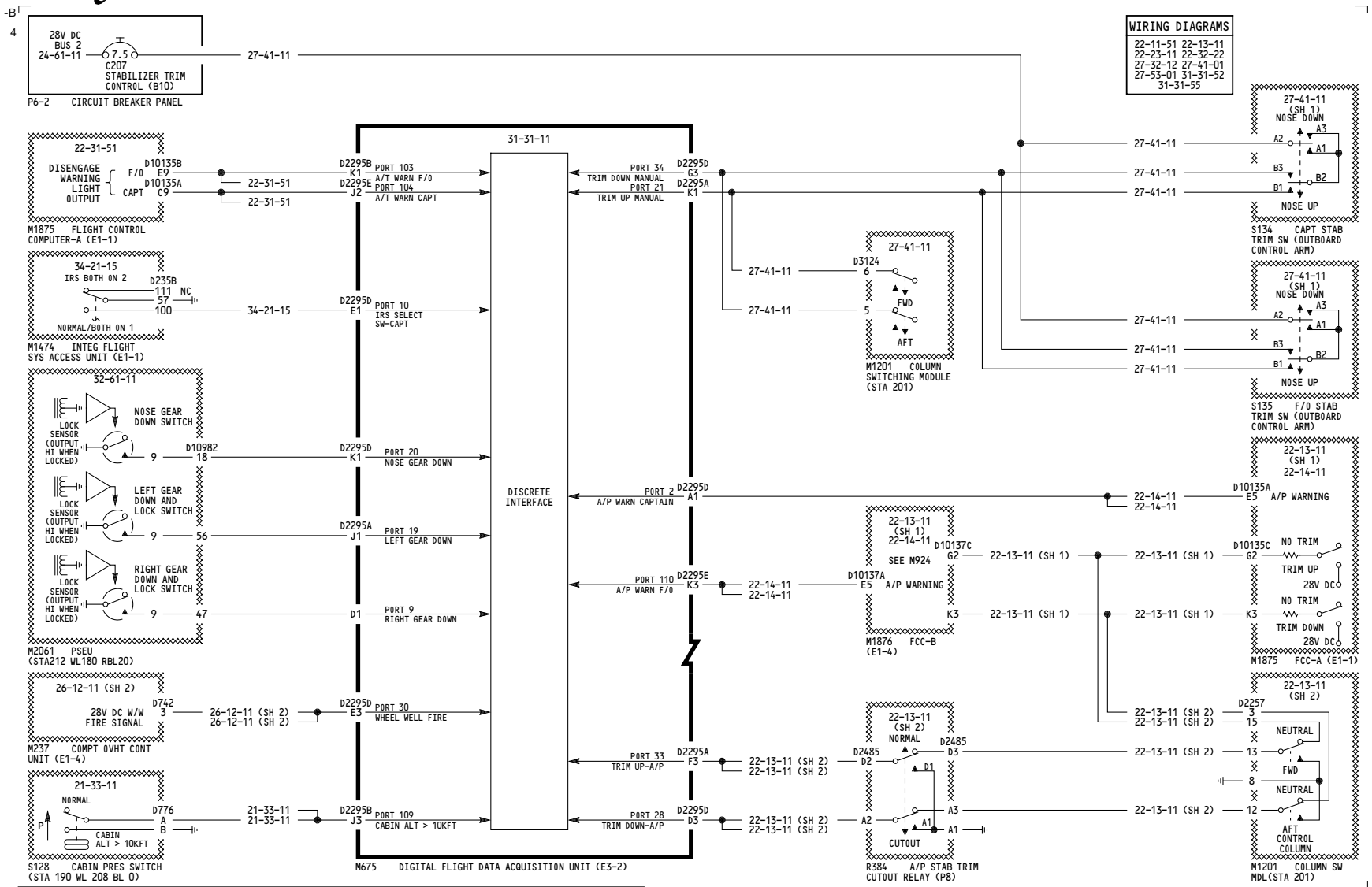

ALL

DIGITAL FLIGHT DATA RECORDER SYSTEM DISCRETE INTERFACE

D280A451

31-31-15

Page 101
Sheet 2
Jun 21/2016

BOEING PROPRIETARY - Copyright © - Unpublished Work - See title page for details.

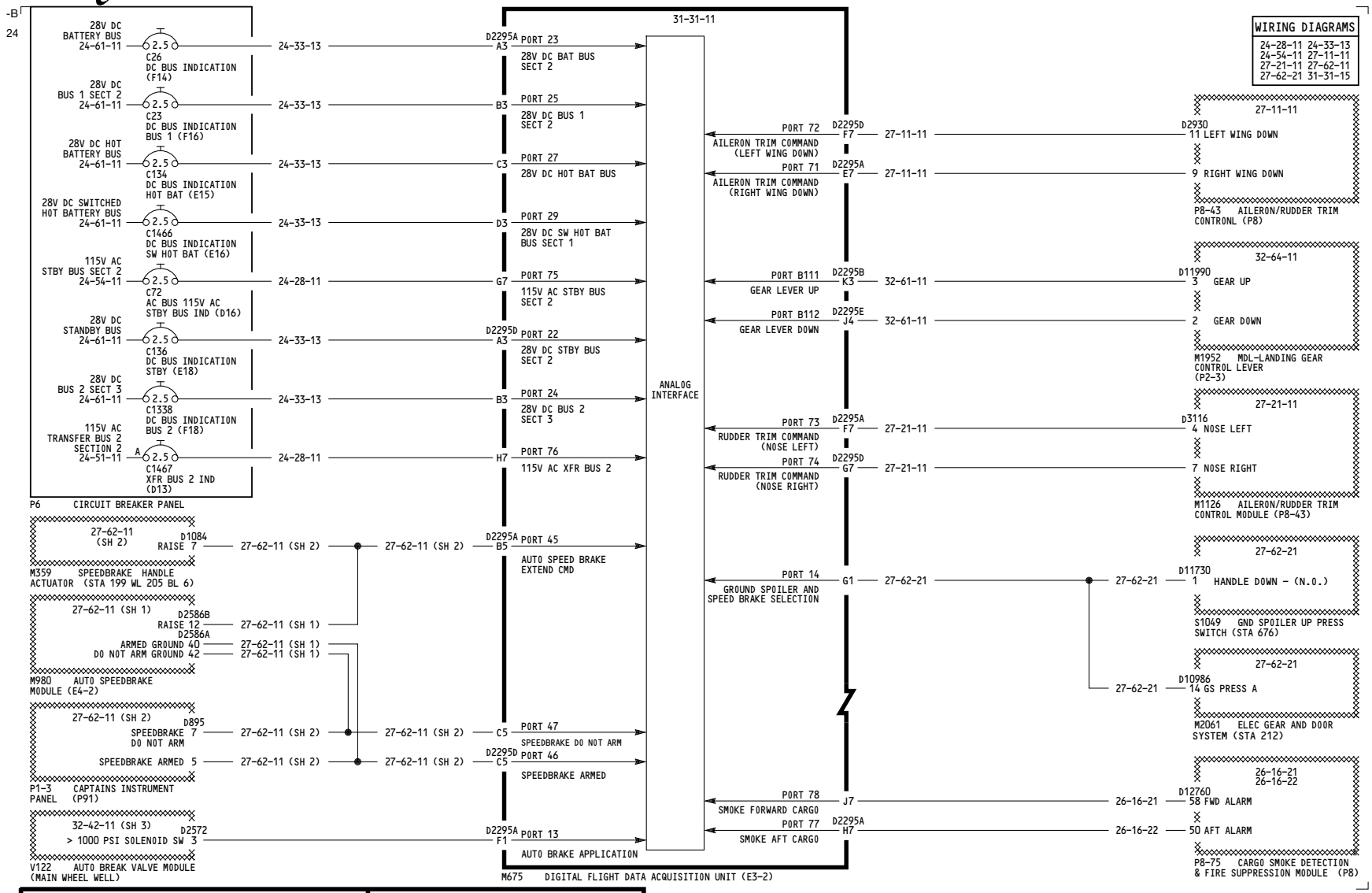

ALL

DIGITAL FLIGHT DATA RECORDER SYSTEM DISCRETE INTERFACE

D280A451

31-31-15

Page 101
Sheet 3
Jun 21/2016

BOEING PROPRIETARY - Copyright © - Unpublished Work - See title page for details.

-E
348

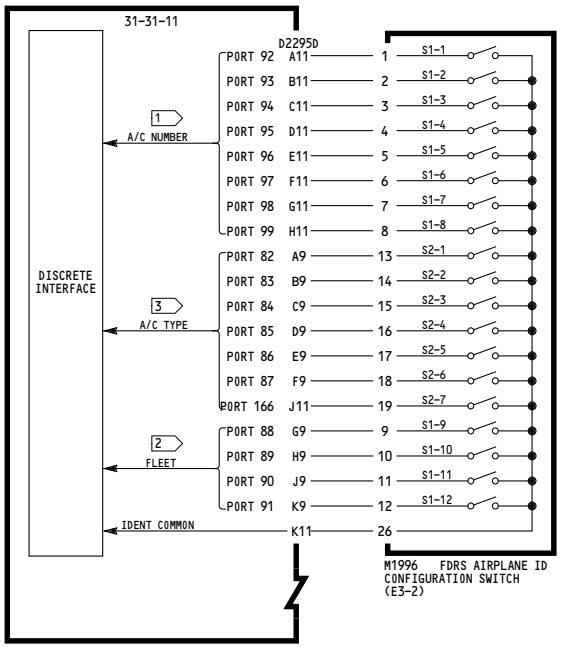

A/C EFF	FLEET 2			
	91	90	89	88
YT101-YT135 YT141-YT170	0	0	0	1
YT136-YT140	0	0	1	0
YV201-YV250	0	1	0	0
YW201-YW225	0	1	0	0

1 - M1996 SELECTED TO "ON"
0 - M1996 SELECTED NOT TO "ON"

A/C EFF	A/C TYPE 3						
	166	87	86	85	84	83	82
YT101-YT135 YT141-YT170	1	0	0	0	0	0	1
YT136-YT140	1	0	0	0	0	0	1
YV201-YV250	1	0	0	0	0	0	1
YW201-YW225	1	0	0	0	0	0	1

1 - M1996 SELECTED TO "ON"
0 - M1996 SELECTED NOT TO "ON"

NOTES:

1 AIRCRAFT NUMBERS

2 FLEET IDENTIFICATION

3 AIRCRAFT TYPE

A/C EFF	A/C NUMBER 1							
	99	98	97	96	95	94	93	92
YT101	0	0	0	0	0	0	0	1
YT102	0	0	0	0	0	0	1	0
YT103	0	0	0	0	0	0	1	1
YT104	0	0	0	0	0	1	0	0
YT105	0	0	0	0	0	1	0	1
YT106	0	0	0	0	0	1	1	0
YT107	0	0	0	0	0	1	1	1
YT108	0	0	0	0	1	0	0	0
YT109	0	0	0	0	1	0	0	1
YT110	0	0	0	0	1	0	1	0
YT111	0	0	0	0	1	0	1	1
YT112	0	0	0	0	1	1	0	0
YT113	0	0	0	0	1	1	0	1
YT114	0	0	0	0	1	1	1	0
YT115	0	0	0	0	1	1	1	1
YT116	0	0	0	1	0	0	0	0
YT117	0	0	0	1	0	0	0	1
YT118	0	0	0	1	0	0	1	0
YT119	0	0	0	1	0	0	1	1
YT120	0	0	0	1	0	1	0	0
YT121	0	0	0	1	0	1	0	1
YT122	0	0	0	1	0	1	1	0
YT123	0	0	0	1	0	1	1	1
YT124	0	0	0	1	1	0	0	0
YT125	0	0	0	1	1	0	0	1
YT126	0	0	0	1	1	0	1	0
YT127	0	0	0	1	1	0	1	1
YT128	0	0	0	1	1	1	0	0
YT129	0	0	0	1	1	1	0	1
YT130	0	0	0	1	1	1	1	0
YT131	0	0	0	1	1	1	1	1
YT132	0	0	1	0	0	0	0	0
YT133	0	0	1	0	0	0	0	1
YT134	0	0	1	0	0	0	1	0
YT135	0	0	1	0	0	0	1	1
YT136	0	0	1	0	0	1	0	0
YT137	0	0	1	0	0	1	0	1
YT138	0	0	1	0	0	1	1	0
YT139	0	0	1	0	0	1	1	1
YT140	0	0	1	0	1	0	0	0

1 - M1996 SELECTED TO "ON"
0 - M1996 SELECTED NOT TO "ON"

A/C EFF	A/C NUMBER 1							
	99	98	97	96	95	94	93	92
YT141	0	0	1	0	1	0	0	1
YT142	0	0	1	0	1	0	1	0
YT143	0	0	1	0	1	0	1	1
YT144	0	0	1	0	1	1	0	0
YT145	0	0	1	0	1	1	0	1
YT146	0	0	1	0	1	1	1	0
YT147	0	0	1	0	1	1	1	1
YT148	0	0	1	1	0	0	0	0
YT149	0	0	1	1	0	0	0	1
YT150	0	0	1	1	0	0	1	0
YT151	0	0	1	1	0	0	1	1
YT152	0	0	1	1	0	1	0	0
YT153	0	0	1	1	0	1	0	1
YT154	0	0	1	1	0	1	1	0
YT155	0	0	1	1	0	1	1	1
YT156	0	0	1	1	1	0	0	0
YT157	0	0	1	1	1	0	0	1
YT158	0	0	1	1	1	0	1	0
YT159	0	0	1	1	1	0	1	1
YT160	0	0	1	1	1	1	0	0
YT161	0	0	1	1	1	1	0	1
YT162	0	0	1	1	1	1	1	0
YT163	0	0	1	1	1	1	1	1
YT164	0	1	0	0	0	0	0	0
YT165	0	1	0	0	0	0	0	1
YT166	0	1	0	0	0	0	1	0
YT167	0	1	0	0	0	0	1	1
YT168	0	1	0	0	0	1	0	0
YT169	0	1	0	0	0	1	0	1
YT170	0	1	0	0	0	1	1	0
YV201	0	1	0	0	0	1	1	1
YV202	0	1	0	0	1	0	0	0
YV203	0	1	0	0	1	0	0	1
YV204	0	1	0	0	1	0	1	0
YV205	0	1	0	0	1	0	1	1
YV206	0	1	0	0	1	1	0	0
YV207	0	1	0	0	1	1	0	1
YV208	0	1	0	0	1	1	1	0
YV209	0	1	0	0	1	1	1	1
YV210	0	1	0	1	0	0	0	0

1 - M1996 SELECTED TO "ON"
0 - M1996 SELECTED NOT TO "ON"

A/C EFF	A/C NUMBER 1							
	99	98	97	96	95	94	93	92
YV211	0	1	0	1	0	0	0	1
YV212	0	1	0	1	0	0	1	0
YV213	0	1	0	1	0	0	1	1
YV214	0	1	0	1	0	1	0	0
YV215	0	1	0	1	0	1	0	1
YV216	0	1	0	1	0	1	1	0
YV217	0	1	0	1	0	1	1	1
YV218	0	1	0	1	1	0	0	0
YV219	0	1	0	1	1	0	0	1
YV220	0	1	0	1	1	0	1	0
YV221	0	1	0	1	1	0	1	1
YV222	0	1	0	1	1	1	0	0
YV223	0	1	0	1	1	1	0	1
YV224	0	1	0	1	1	1	1	0
YV225	0	1	0	1	1	1	1	1
YV226	0	1	1	0	0	0	0	0
YV227	0	1	1	0	0	0	0	1
YV228	0	1	1	0	0	0	1	0
YV229	0	1	1	0	0	0	1	1
YV230	0	1	1	0	0	1	0	0
YV231	0	1	1	0	0	1	0	1
YV232	0	1	1	0	0	1	1	0
YV233	0	1	1	0	0	1	1	1
YV234	0	1	1	0	1	0	0	0
YV235	0	1	1	0	1	0	0	1
YV236	0	1	1	0	1	0	1	0
YV237	0	1	1	0	1	0	1	1
YV238	0	1	1	0	1	1	0	0
YV239	0	1	1	0	1	1	0	1
YV240	0	1	1	0	1	1	1	0
YV241	0	1	1	0	1	1	1	1
YV242	0	1	1	1	0	0	0	0
YV243	0	1	1	1	0	0	0	1
YV244	0	1	1	1	0	0	1	0
YV245	0	1	1	1	0	0	1	1
YV246	0	1	1	1	0	1	0	0
YV247	0	1	1	1	0	1	0	1
YV248	0	1	1	1	0	1	1	0
YV249	0	1	1	1	0	1	1	1
YV250	0	1	1	1	1	0	0	0

1 - M1996 SELECTED TO "ON"
0 - M1996 SELECTED NOT TO "ON"

WIRING DIAGRAMS
31-31-16

A/C EFF	A/C NUMBER 1							
	99	98	97	96	95	94	93	92
YW201	0	1	1	1	1	0	0	1
YW202	0	1	1	1	1	0	1	0
YW203	0	1	1	1	1	0	1	1
YW204	0	1	1	1	1	1	0	0
YW205	0	1	1	1	1	1	0	1
YW206	0	1	1	1	1	1	1	0
YW207	0	1	1	1	1	1	1	1
YW208	1	0	0	0	0	0	0	0
YW209	1	0	0	0	0	0	0	1
YW210	1	0	0	0	0	0	1	0
YW211	1	0	0	0	0	0	1	1
YW212	1	0	0	0	0	1	0	0
YW213	1	0	0	0	0	1	0	1
YW214	1	0	0	0	0	1	1	0
YW215	1	0	0	0	0	1	1	1
YW216	1	0	0	0	1	0	0	0
YW217	1	0	0	0	1	0	0	1
YW218	1	0	0	0	1	0	1	0
YW219	1	0	0	0	1	0	1	1
YW220	1	0	0	0	1	1	0	0
YW221	1	0	0	0	1	1	0	1
YW222	1	0	0	0	1	1	1	0
YW223	1	0	0	0	1	1	1	1
YW224	1	0	0	1	0	0	0	0
YW225	1	0	0	1	0	0	0	1

1 - M1996 SELECTED TO "ON"
0 - M1996 SELECTED NOT TO "ON"

BOEING PROPRIETARY - Copyright © - Unpublished Work - See title page for details.

WIRING DIAGRAMS
23-12-11 23-12-21 31-31-01 31-31-51 31-31-53

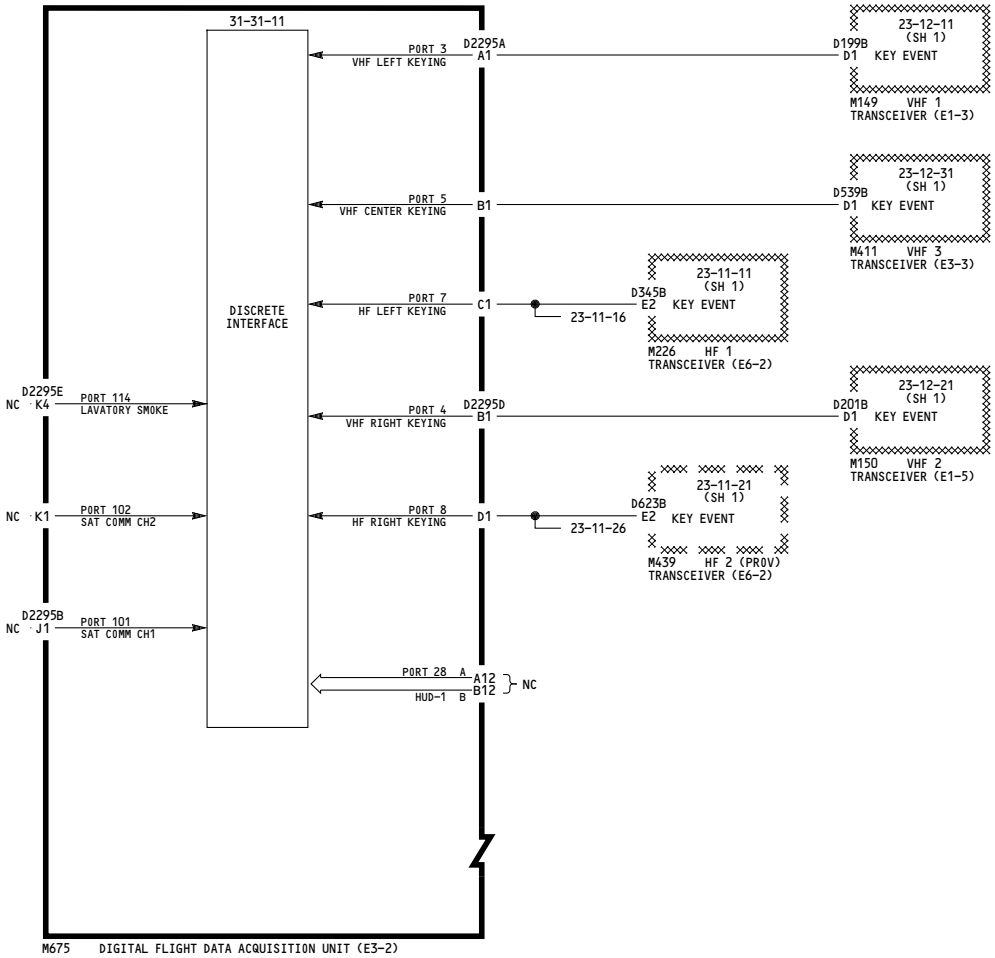

BOEING PROPRIETARY - Copyright © - Unpublished Work - See title page for details.

WIRING DIAGRAMS
23-12-11
23-12-21
31-31-01
31-31-51
31-31-53

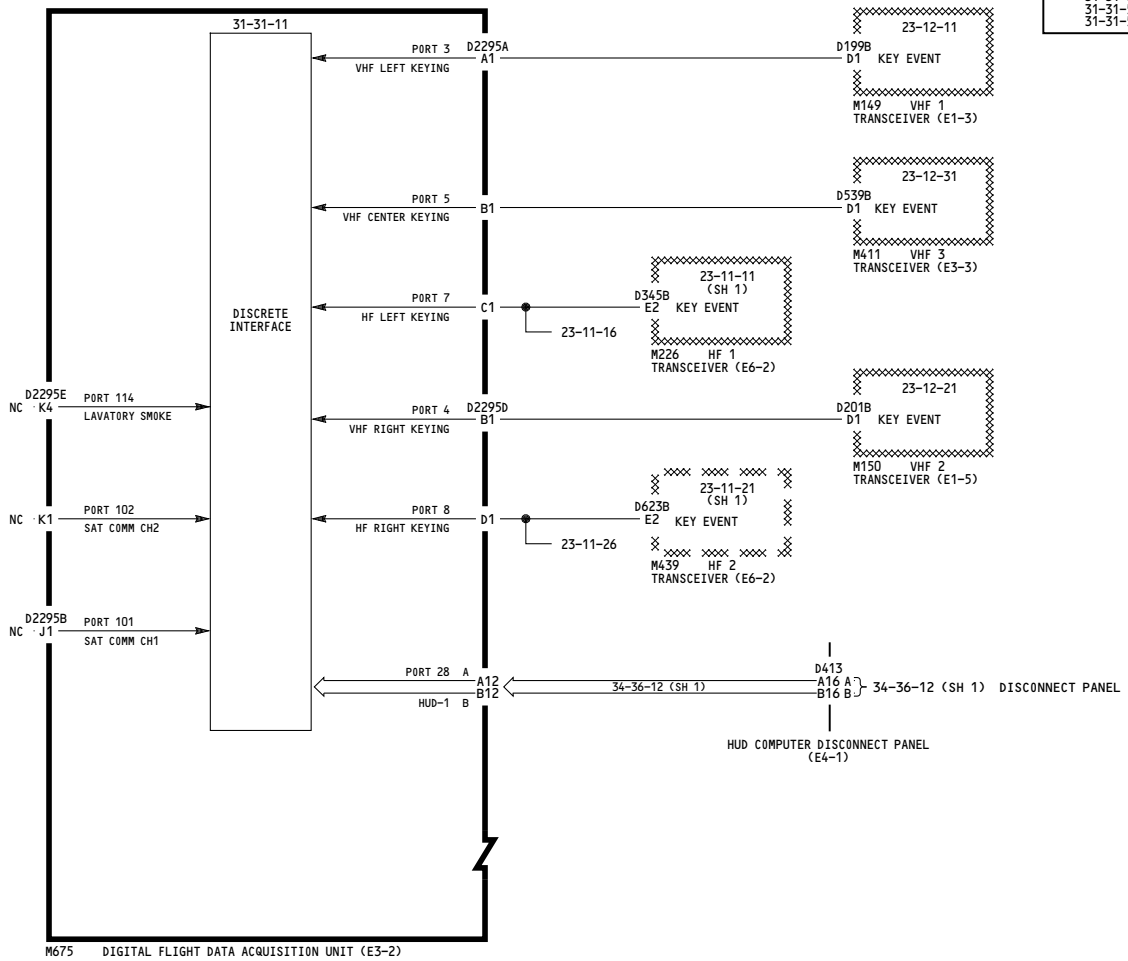

BOEING PROPRIETARY - Copyright © - Unpublished Work - See title page for details.

20

WIRING DIAGRAMS
31-32-15

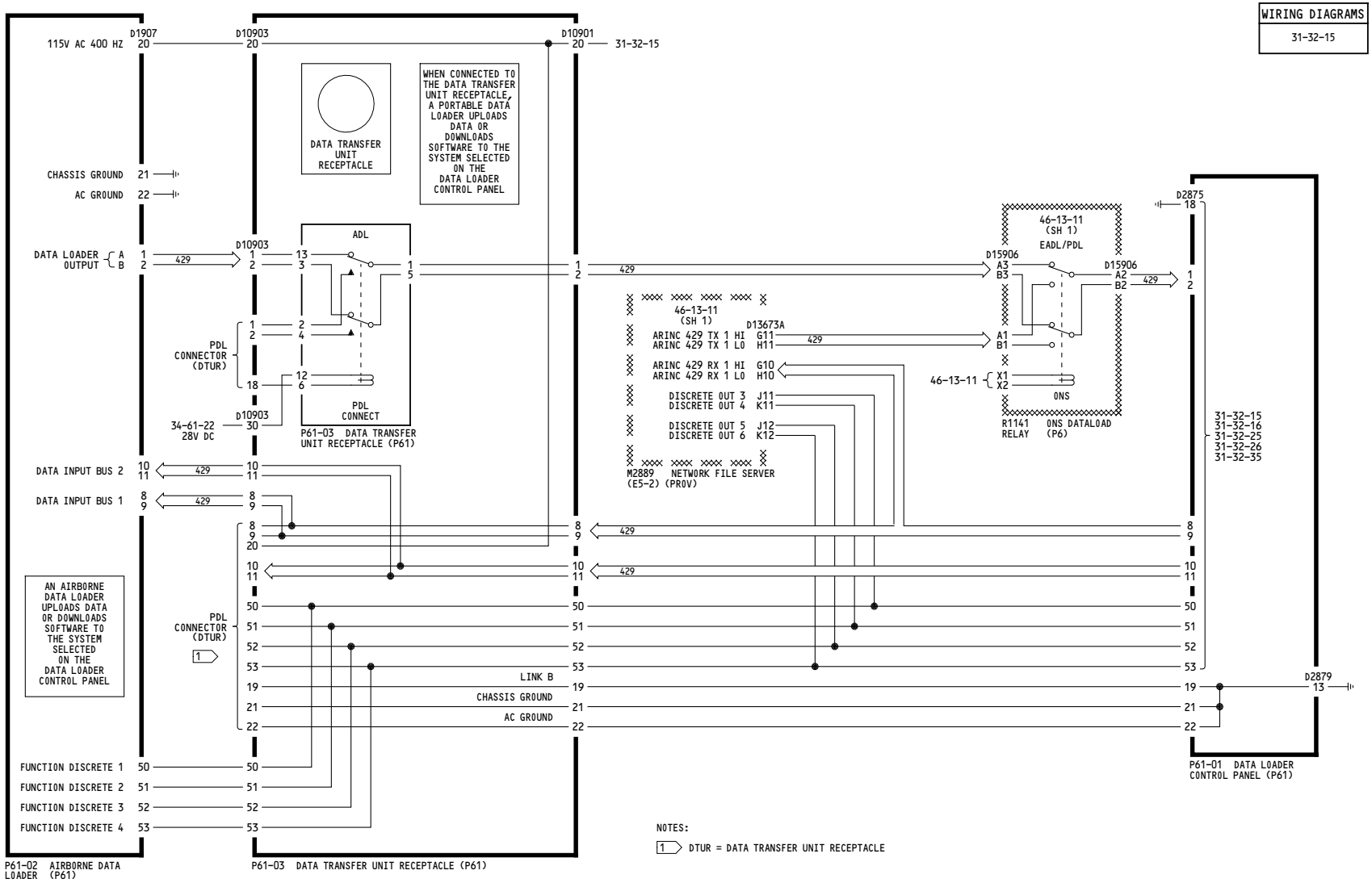

BOEING PROPRIETARY - Copyright © - Unpublished Work - See title page for details.

-B
4

WIRING DIAGRAMS
31-32-15

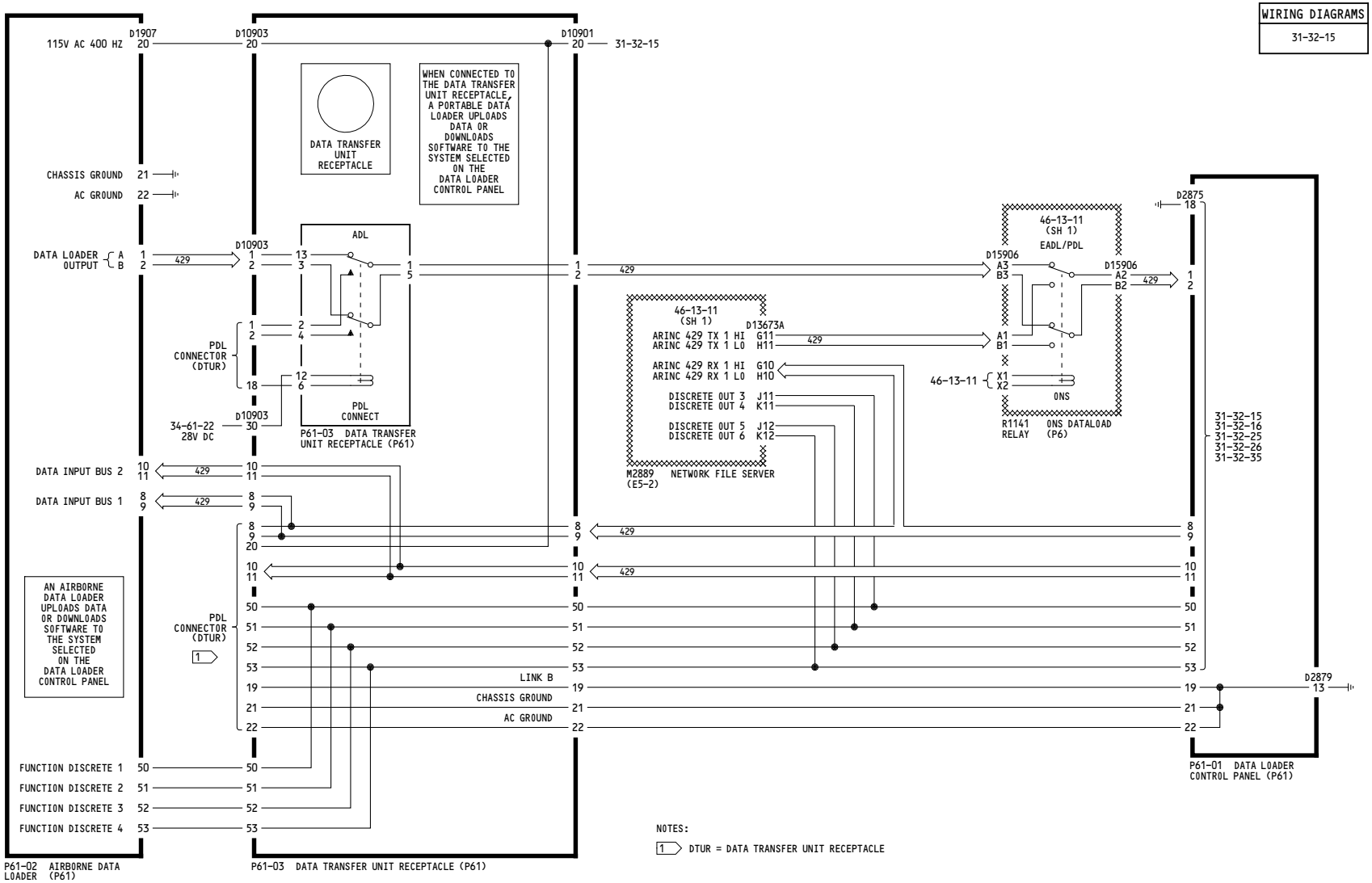

YT106-YT120

DATA LOADER INTERFACES
DATA LOADERS

D280A451

BOEING PROPRIETARY - Copyright © - Unpublished Work - See title page for details.

WIRING DIAGRAMS
31-32-15

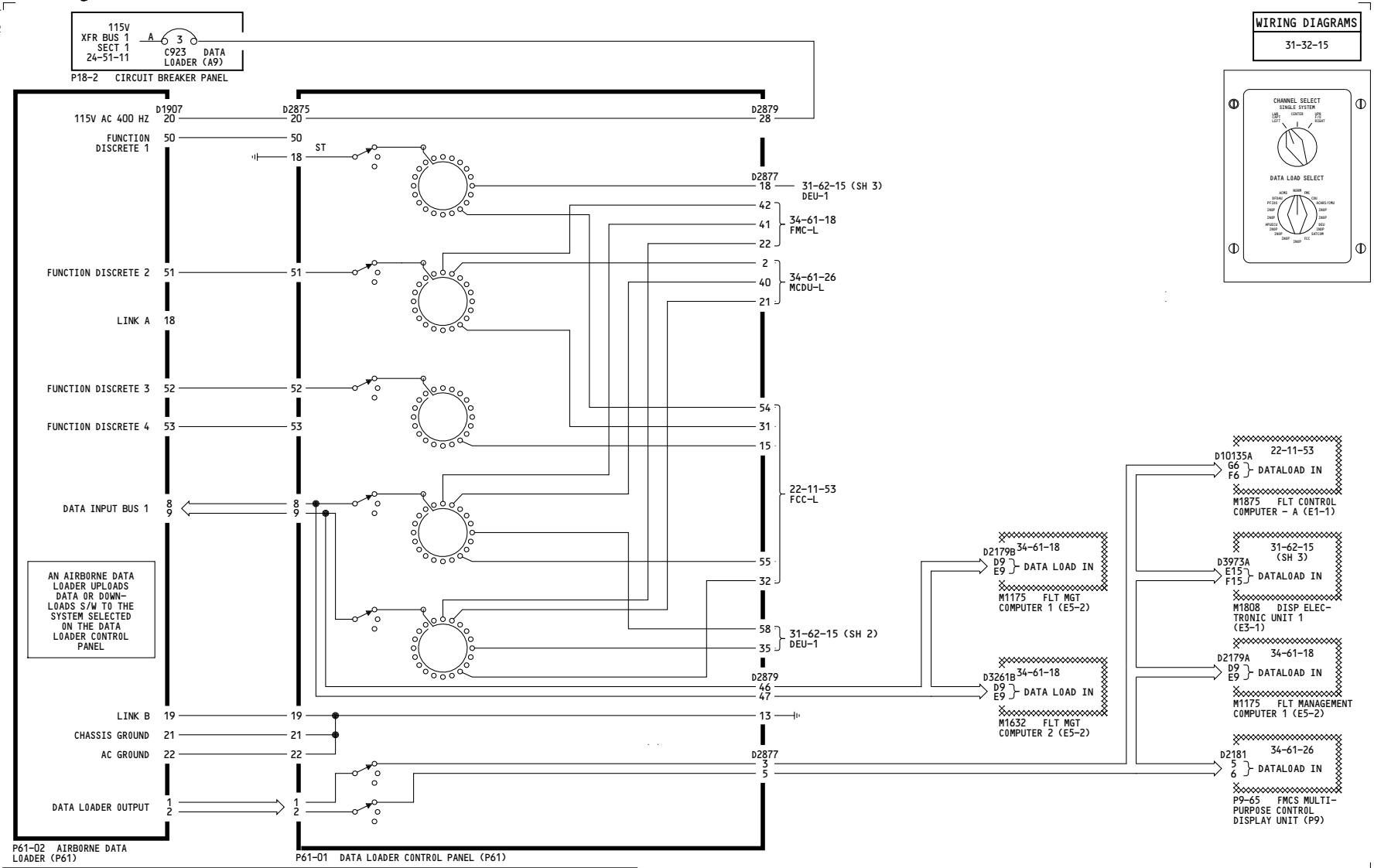

YT101

DATA LOADER INTERFACE (LEFT)

D280A451

BOEING PROPRIETARY - Copyright © - Unpublished Work - See title page for details.

-H
4

WIRING DIAGRAMS
31-32-15

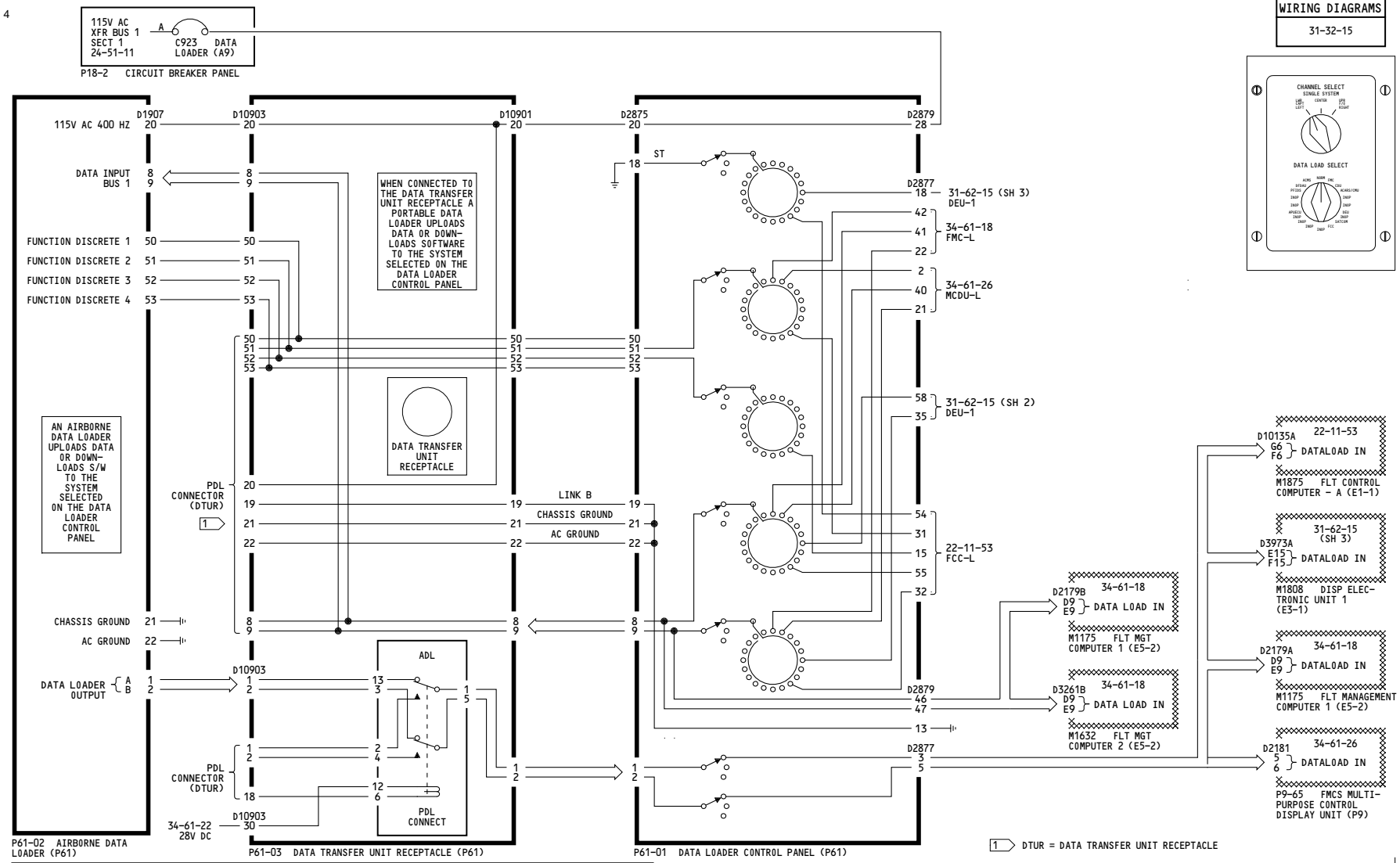

YT102-YT103

DATA LOADER INTERFACE (LEFT)

D280A451

BOEING PROPRIETARY - Copyright © - Unpublished Work - See title page for details.

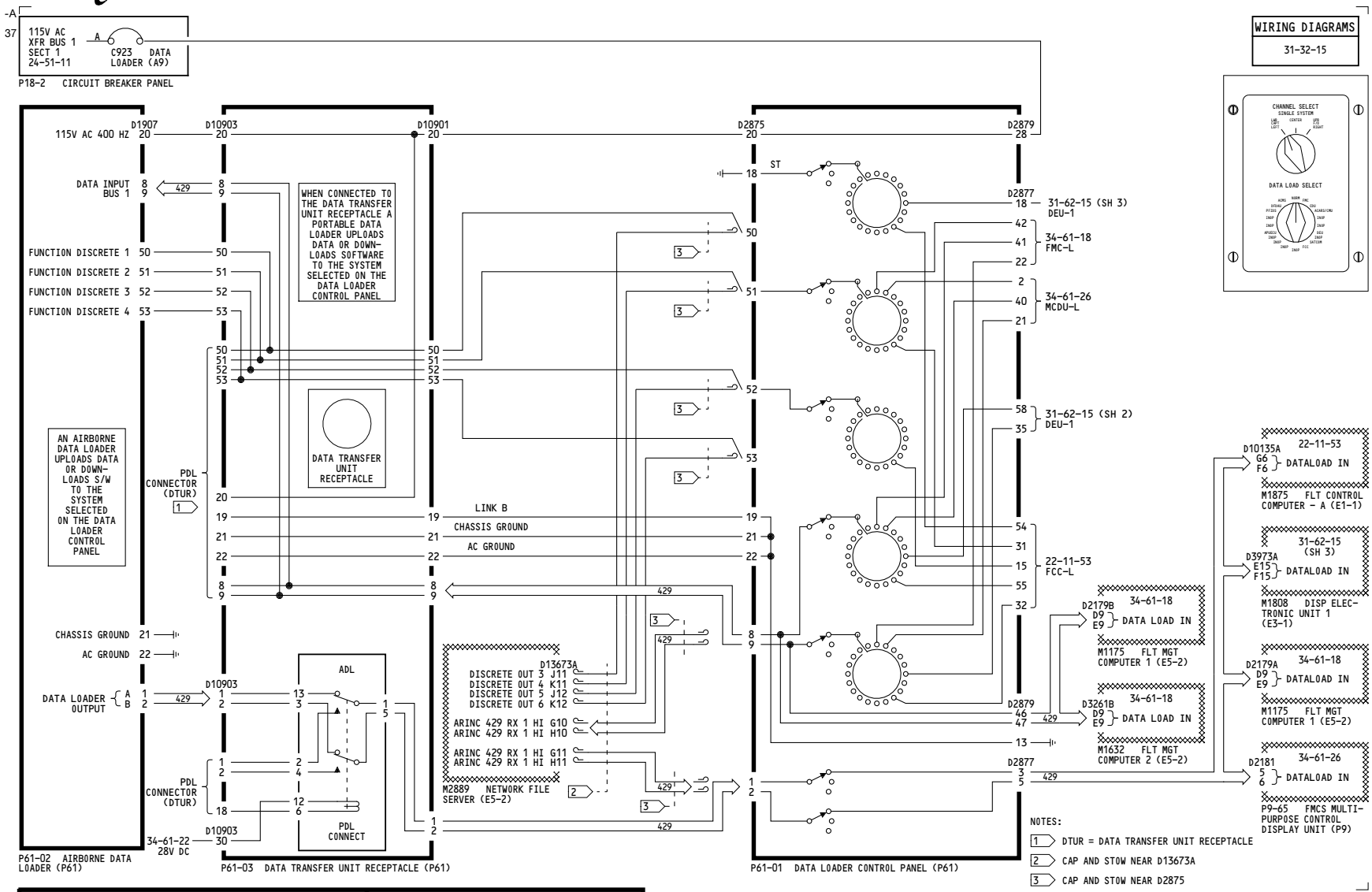

YT104

DATA LOADER INTERFACE (LEFT)

D280A451

BOEING PROPRIETARY - Copyright © - Unpublished Work - See title page for details.

WIRING DIAGRAMS
31-32-15

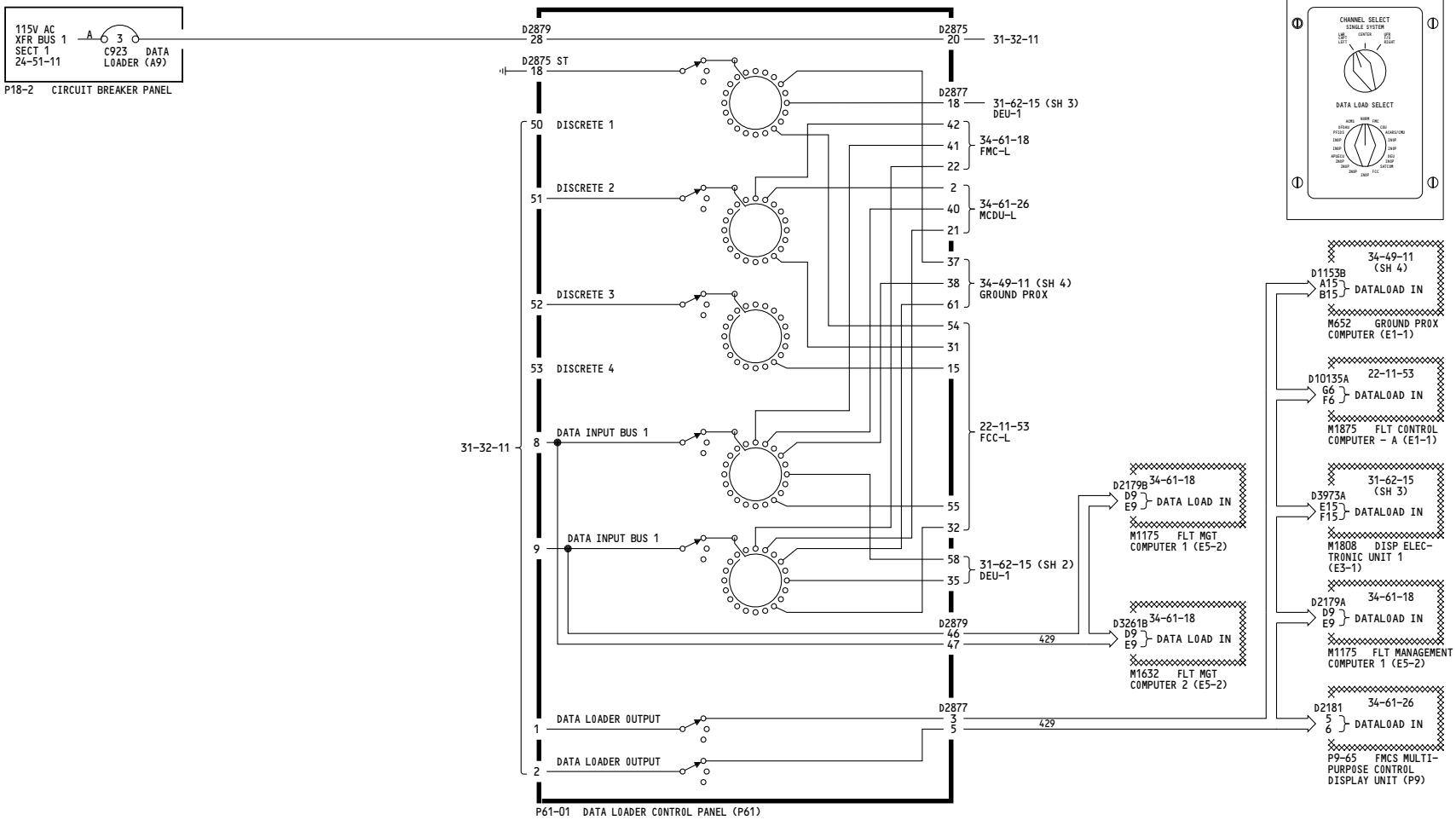

YT105-YT133	**DATA LOADER INTERFACE (LEFT)** D280A451

BOEING PROPRIETARY - Copyright © - Unpublished Work - See title page for details.

34

WIRING DIAGRAMS
31-32-15

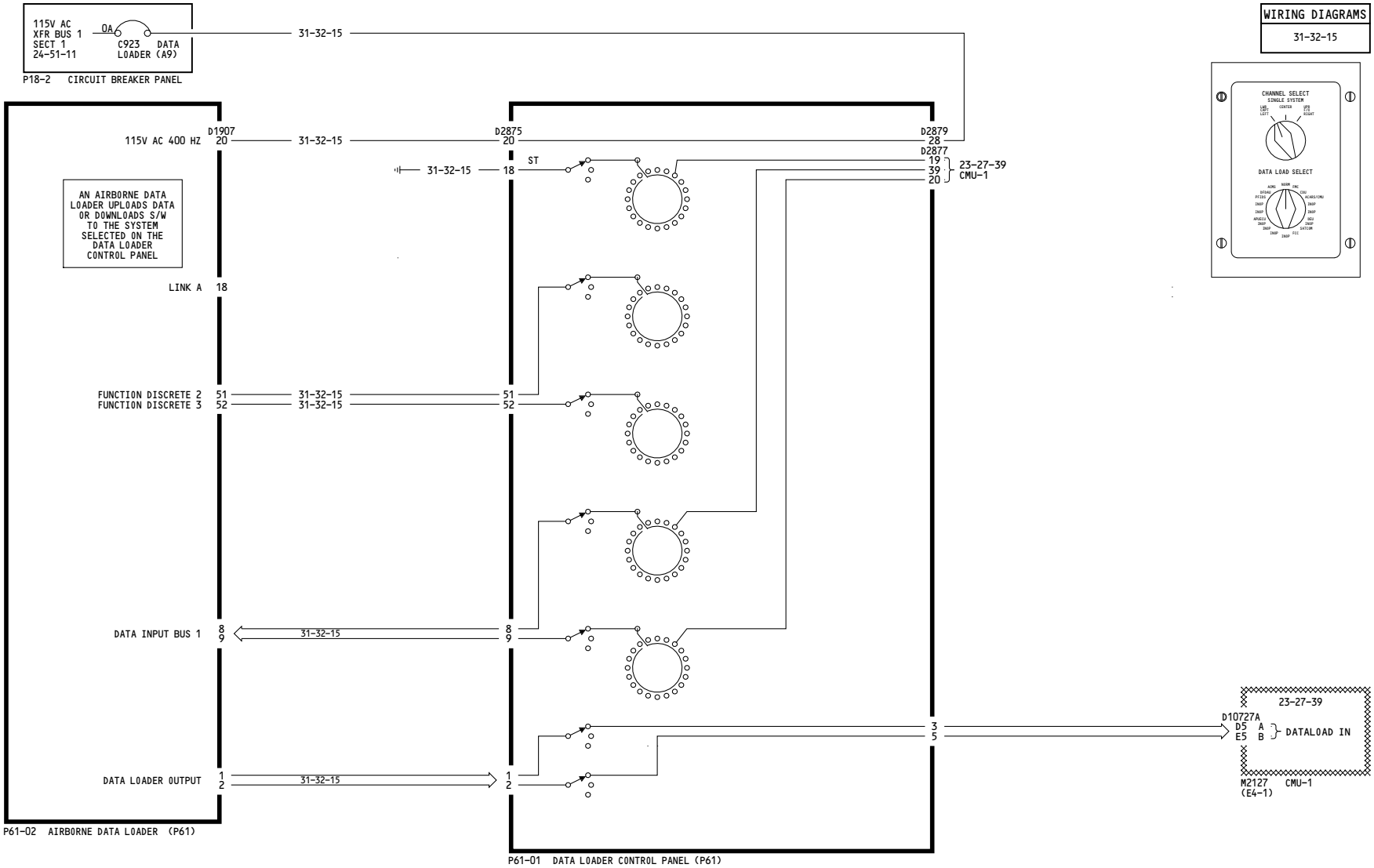

YT101

OPTIONAL DATA LOADER INTERFACE - LEFT

D280A451

BOEING PROPRIETARY - Copyright © - Unpublished Work - See title page for details.

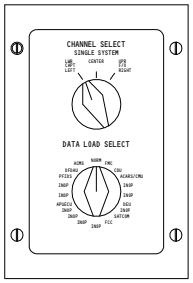

31-32-15
D1907 20 — 31-32-15 — D10903 20
8 9 — 31-32-15 — 8 9
51 50 52 53 — 31-32-15 — 51 50 52 53
PDL CONNECTOR 50 51 52 53 20 8 9
21 22
1 2 — 31-32-15 — 1 2
34-61-22 28V DC — 30
PDL CONNECTOR 1 2 18
P61-02 AIRBORNE DATA LOADER (P61)

31-32-15
D10901 20 — 31-32-15 — D2875 20
31-32-15 — 18 — ST
50 51 52 53 — 31-32-15 — 50 51 52 53
8 9 — 31-32-15 — 8 9
1 2 — 31-32-15 — 1 2
P61-03 DATA TRANSFER UNIT RECEPTACLE (P61)

D2879 28 — 31-32-15
D2877 19 39 20 — 23-27-39 CMU-1
3 5
23-27-39
D10727A D5 A E5 B — DATALOAD IN
M2127 CMU-1 (E4-1)
P61-01 DATA LOADER CONTROL PANEL (P61)

YT102-YT104

OPTIONAL DATA LOADER INTERFACE - LEFT

D280A451

BOEING PROPRIETARY - Copyright © - Unpublished Work - See title page for details.

WIRING DIAGRAMS
31-32-15

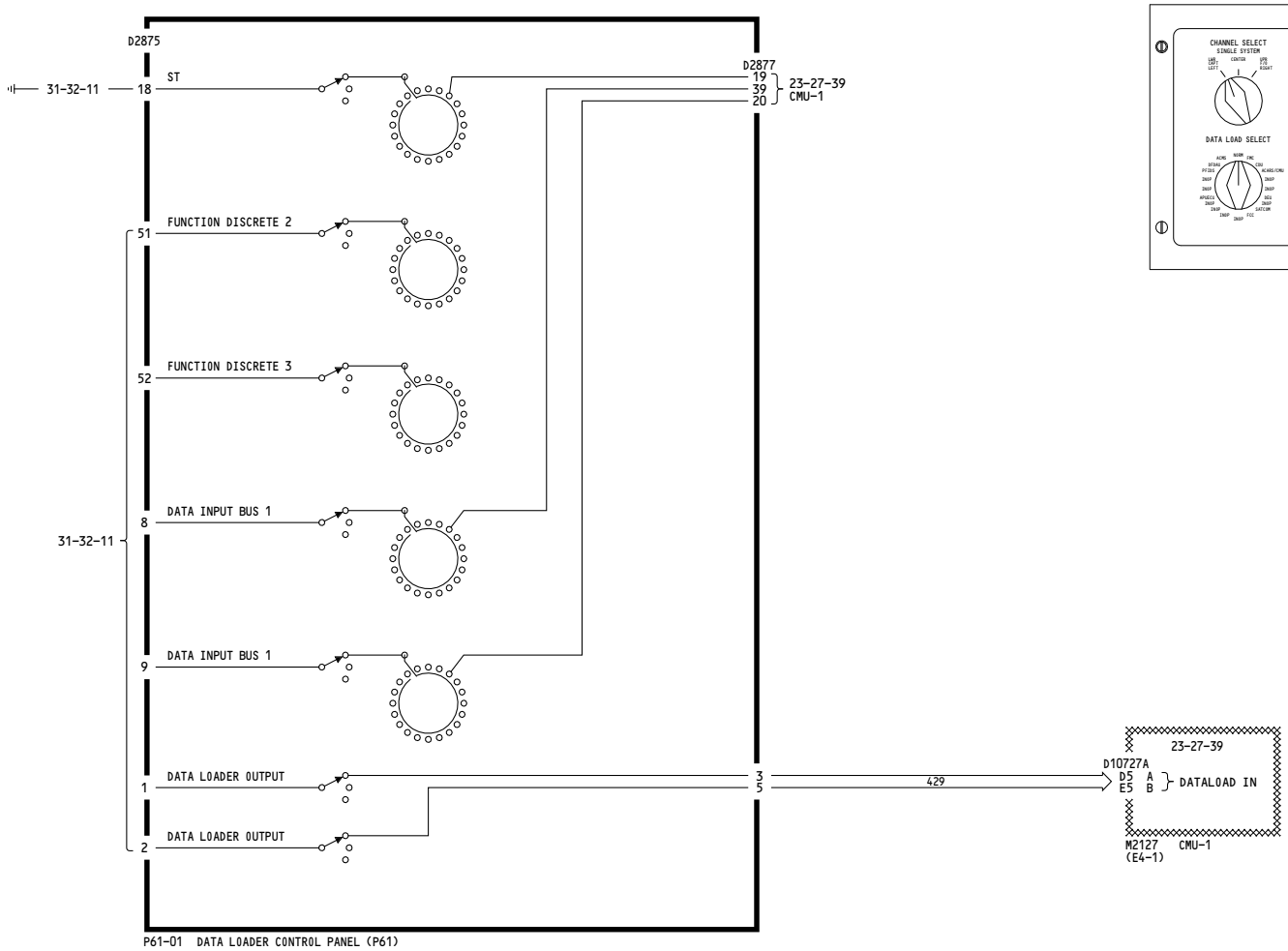

YT105-YT133

OPTIONAL DATA LOADER INTERFACE - LEFT

D280A451

BOEING PROPRIETARY - Copyright © - Unpublished Work - See title page for details.

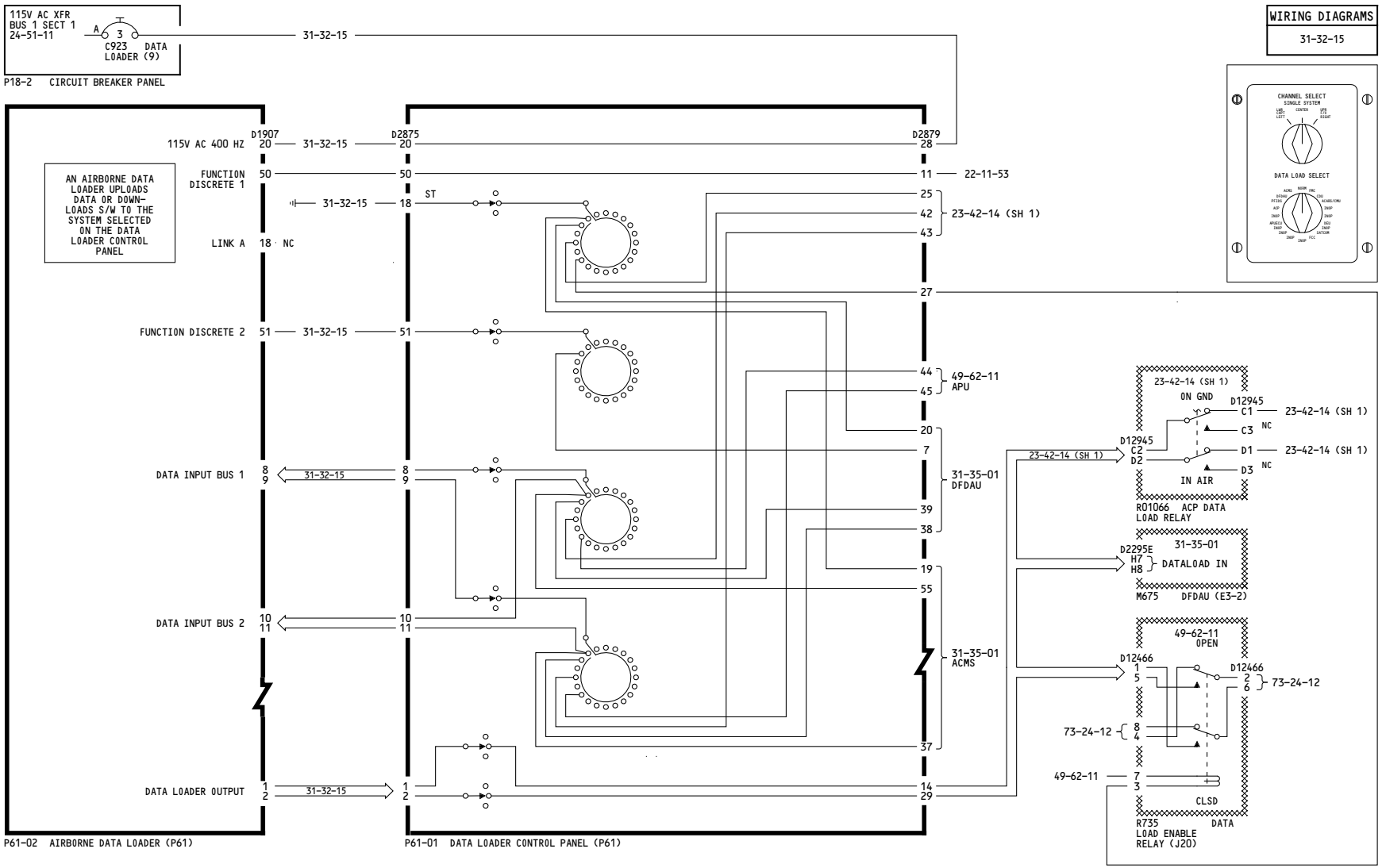

YT101

DATA LOADER INTERFACE (CENTER)

D280A451

BOEING PROPRIETARY - Copyright © - Unpublished Work - See title page for details.

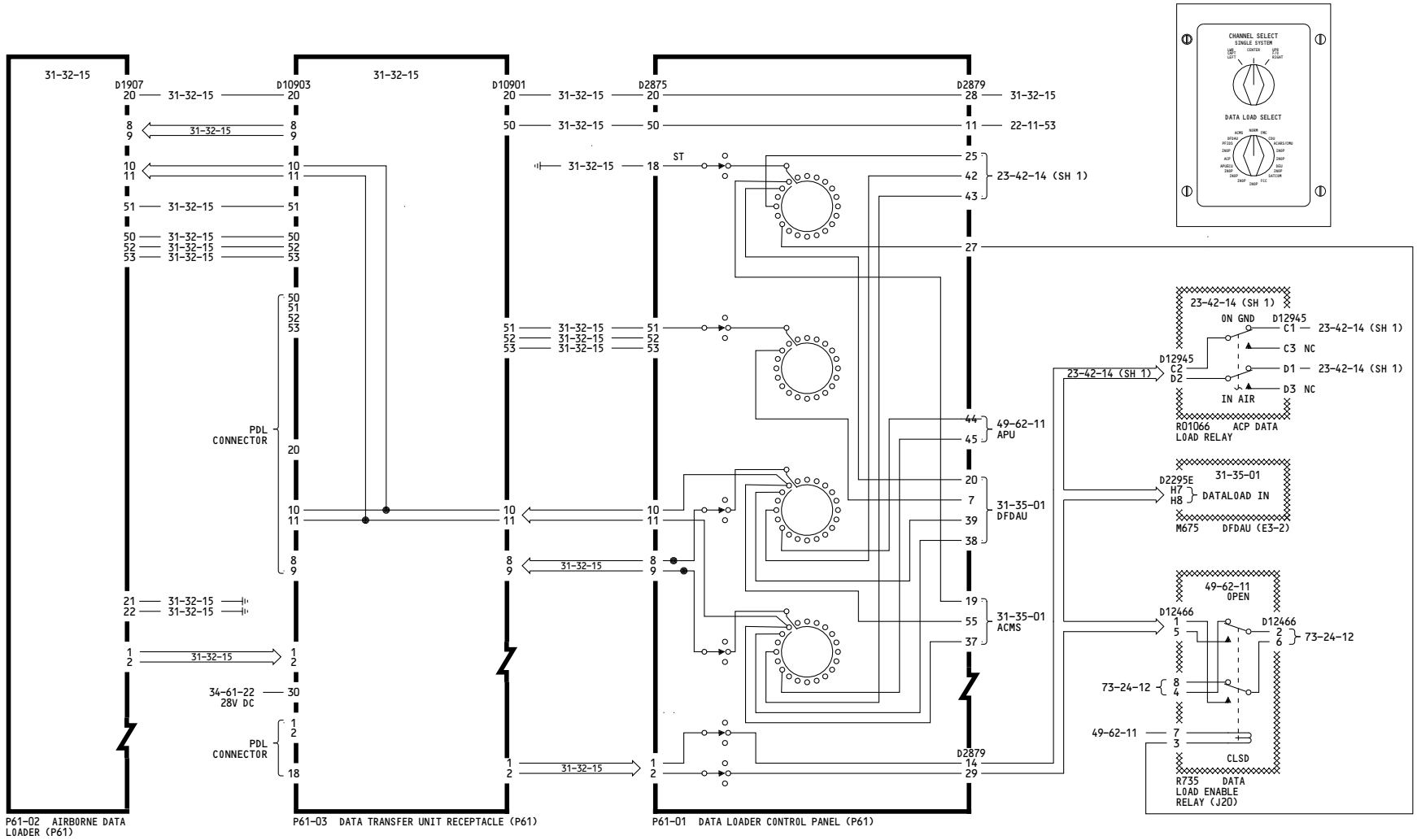

YT102-YT104

DATA LOADER INTERFACE (CENTER)

D280A451

BOEING PROPRIETARY - Copyright © - Unpublished Work - See title page for details.

WIRING DIAGRAMS
31-32-15

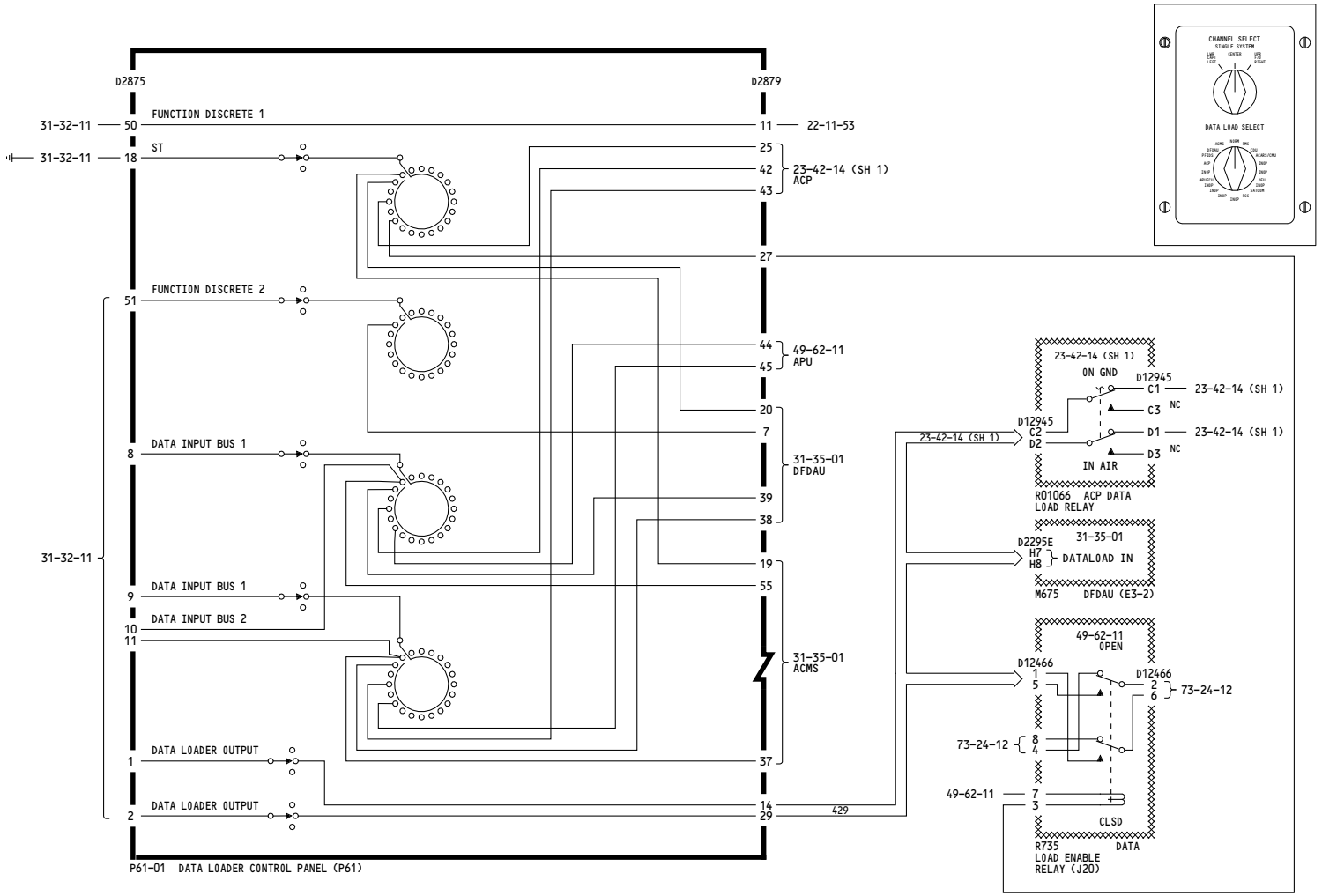

YT105-YT133	DATA LOADER INTERFACE (CENTER)
	D280A451

BOEING PROPRIETARY - Copyright © - Unpublished Work - See title page for details.

-D
9

WIRING DIAGRAMS
31-32-15

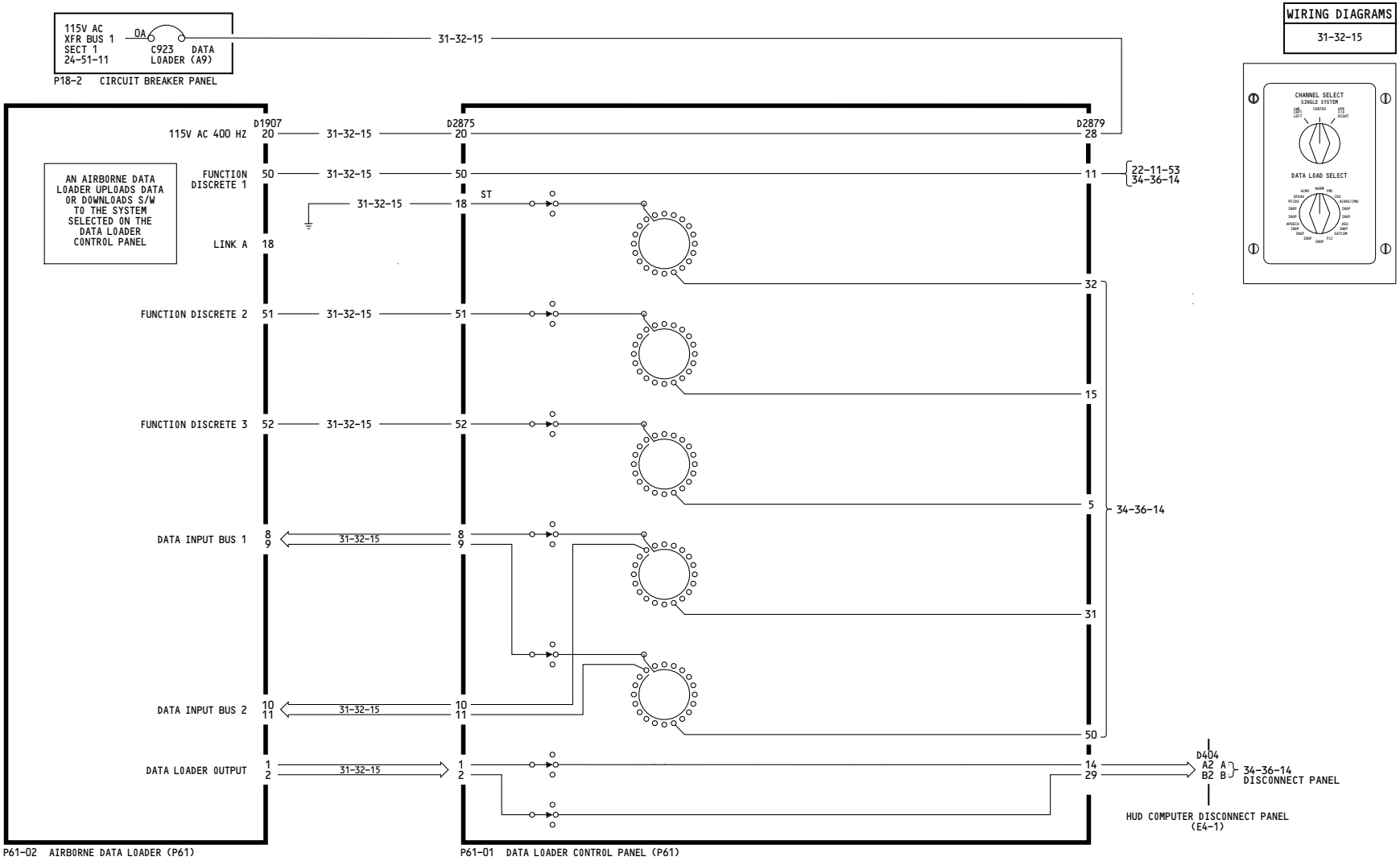

YT101

OPTIONAL DATA LOADER INTERFACE (CENTER)

D280A451

BOEING PROPRIETARY - Copyright © - Unpublished Work - See title page for details.

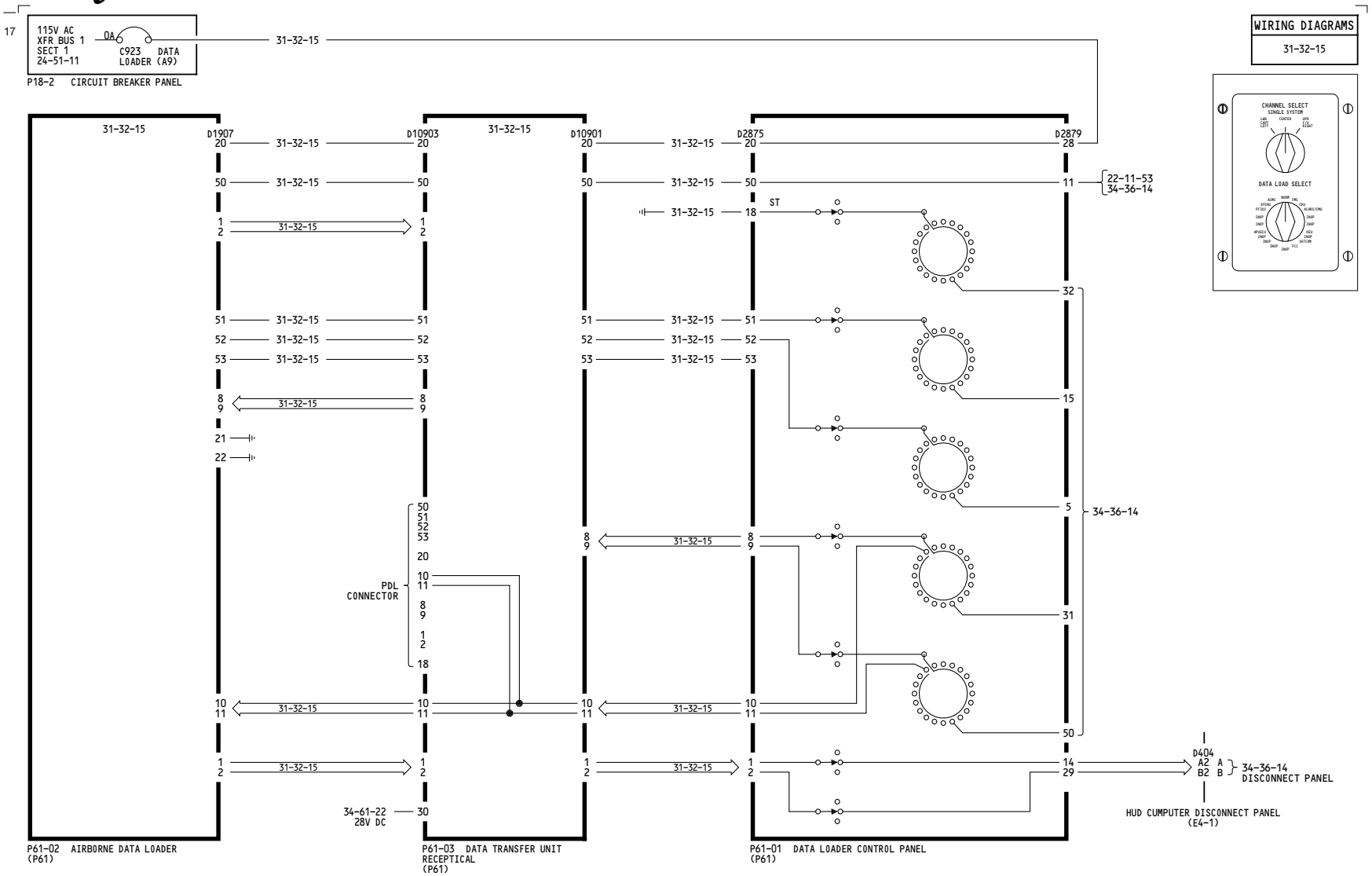

YT102-YT104

OPTIONAL DATA LOADER INTERFACE (CENTER)

D280A451

BOEING PROPRIETARY - Copyright © - Unpublished Work - See title page for details.

WIRING DIAGRAMS
31-32-15

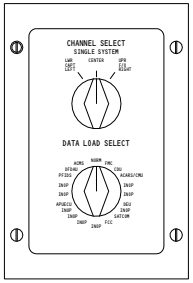

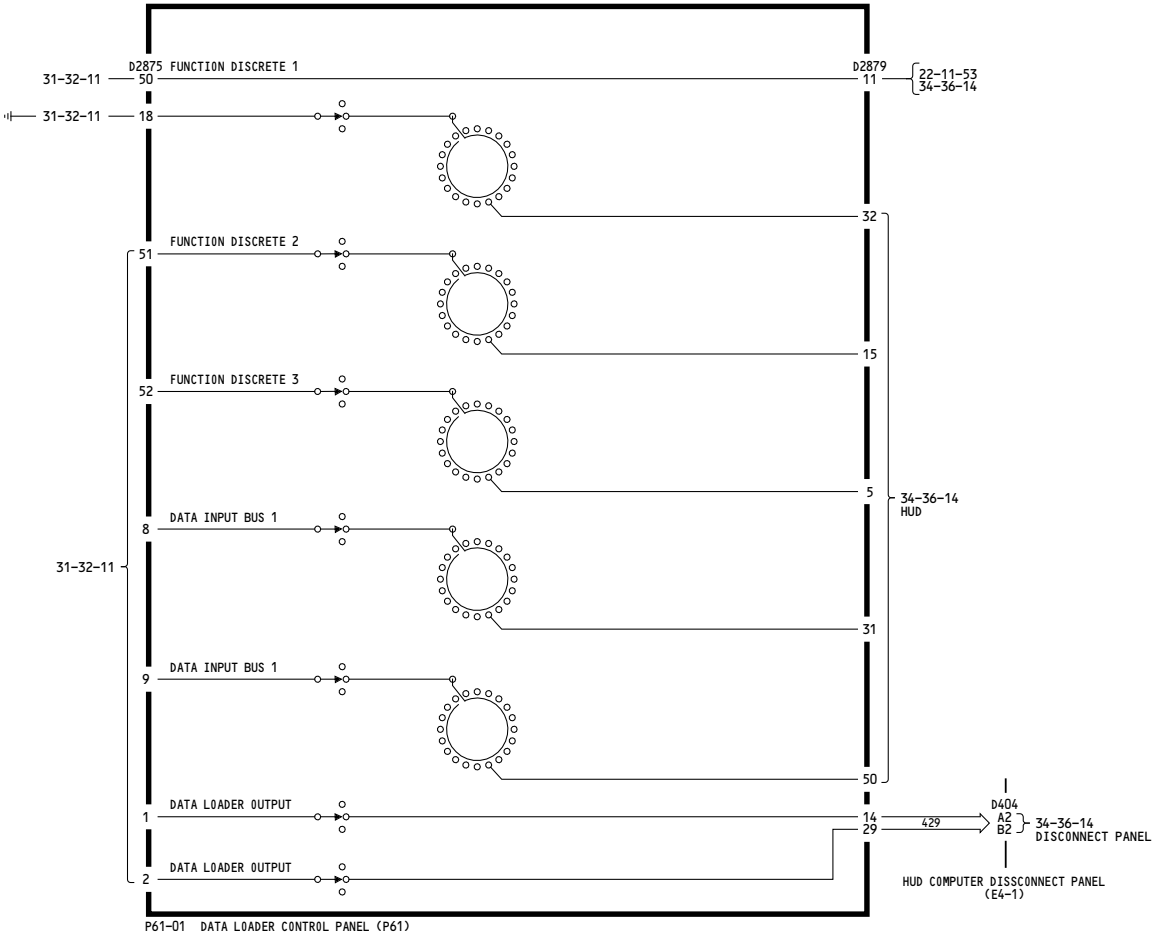

YT105-YT133	OPTIONAL DATA LOADER INTERFACE (CENTER)
	D280A451

BOEING PROPRIETARY - Copyright © - Unpublished Work - See title page for details.

-A
12

WIRING DIAGRAMS
31-32-15

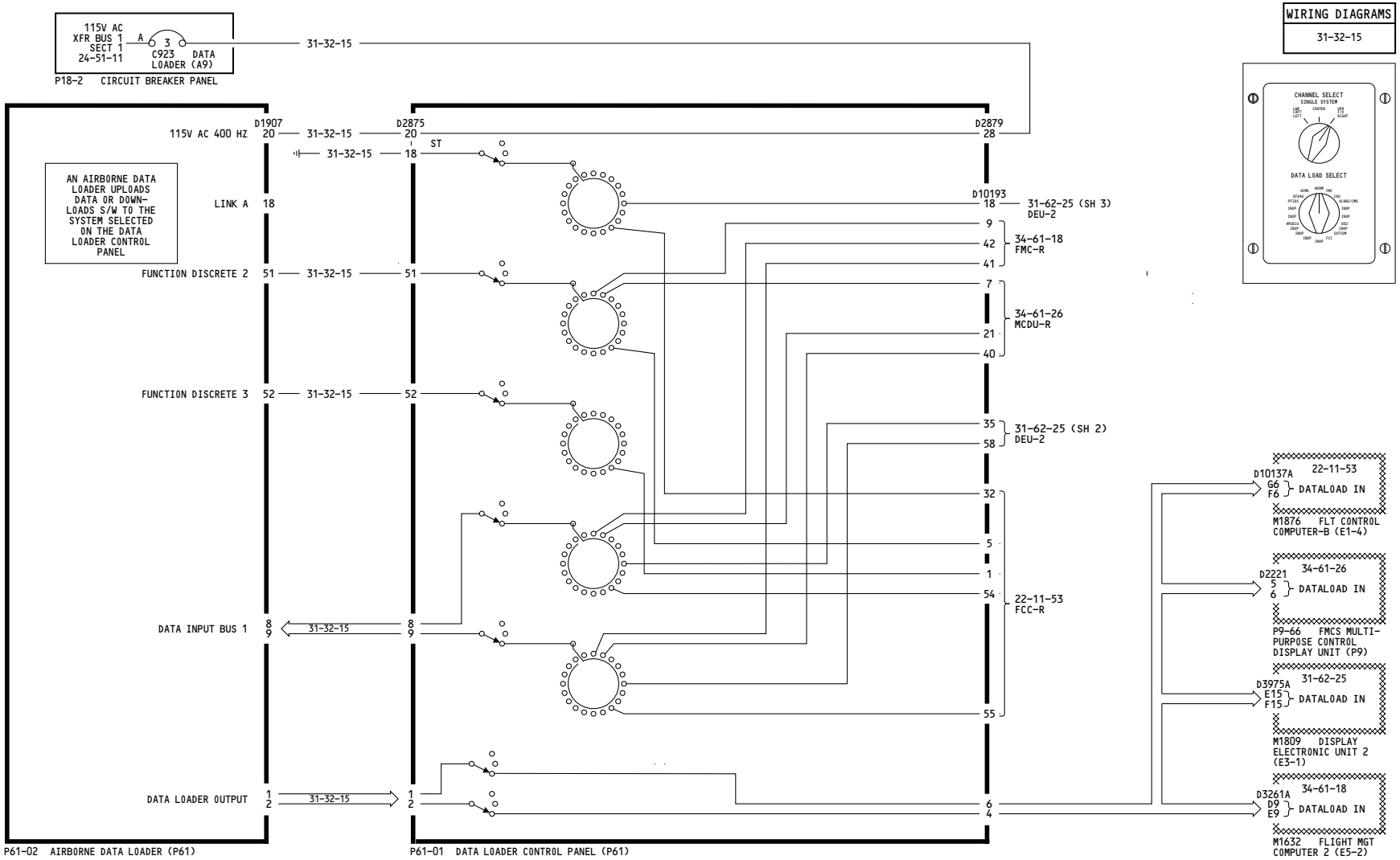

YT101

DATA LOADER INTERFACE (RIGHT)

D280A451

BOEING PROPRIETARY - Copyright © - Unpublished Work - See title page for details.

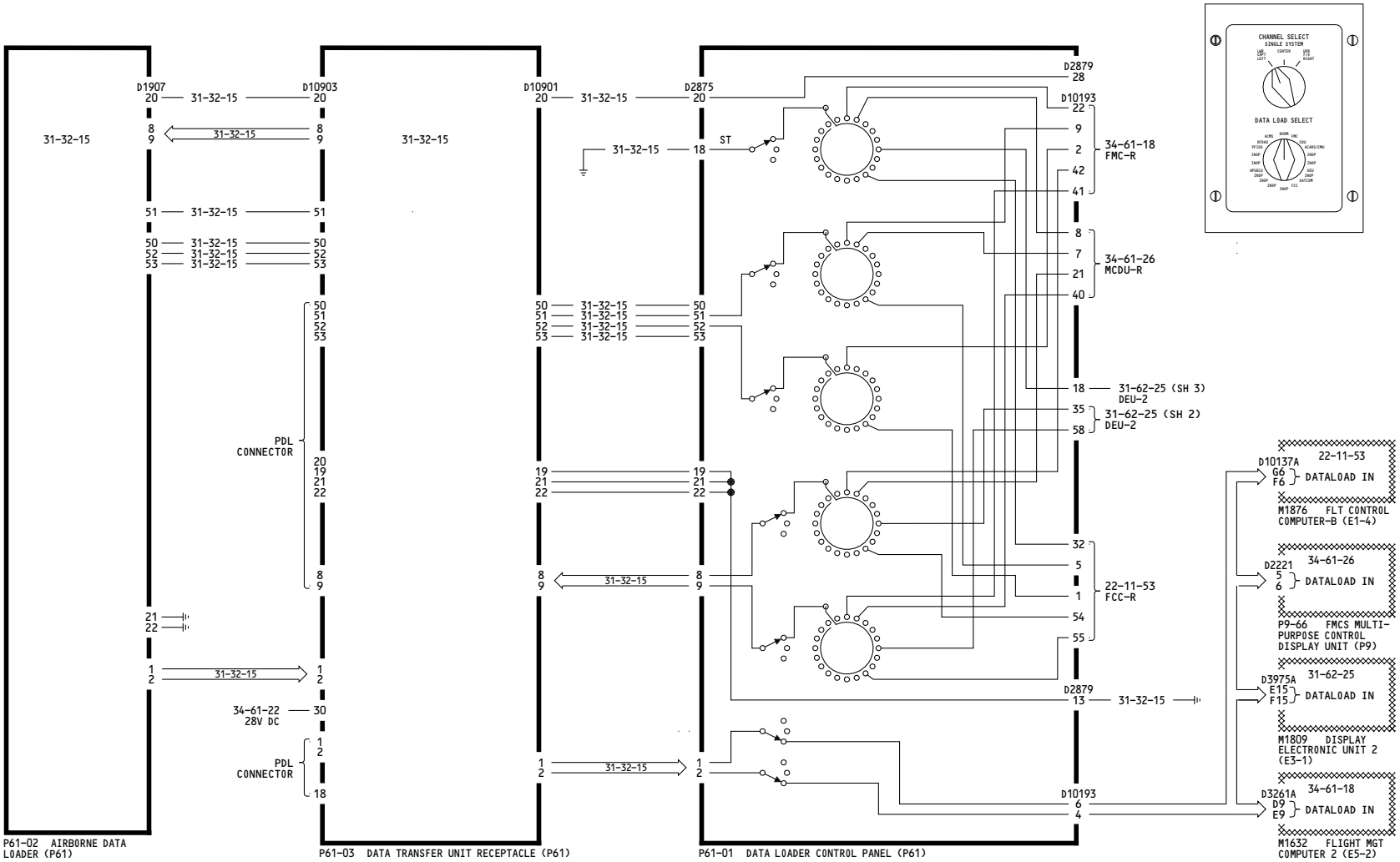

YT102-YT104

DATA LOADER INTERFACE (RIGHT)

D280A451

BOEING PROPRIETARY - Copyright © - Unpublished Work - See title page for details.

WIRING DIAGRAMS
31-32-15

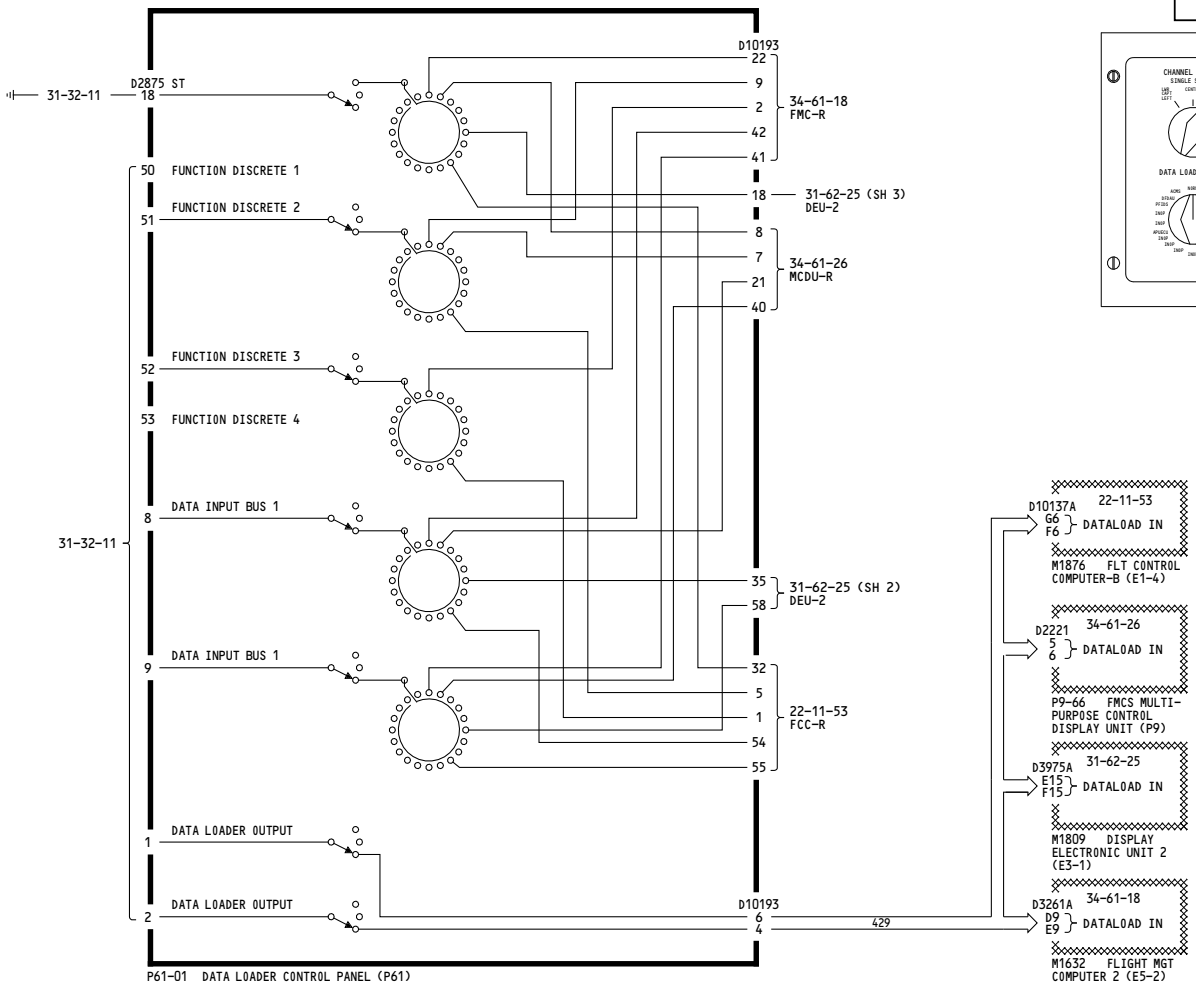

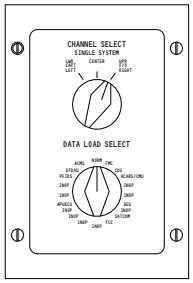

YT105

DATA LOADER INTERFACE (RIGHT)

D280A451

BOEING PROPRIETARY - Copyright © - Unpublished Work - See title page for details.

WIRING DIAGRAMS
31-32-15

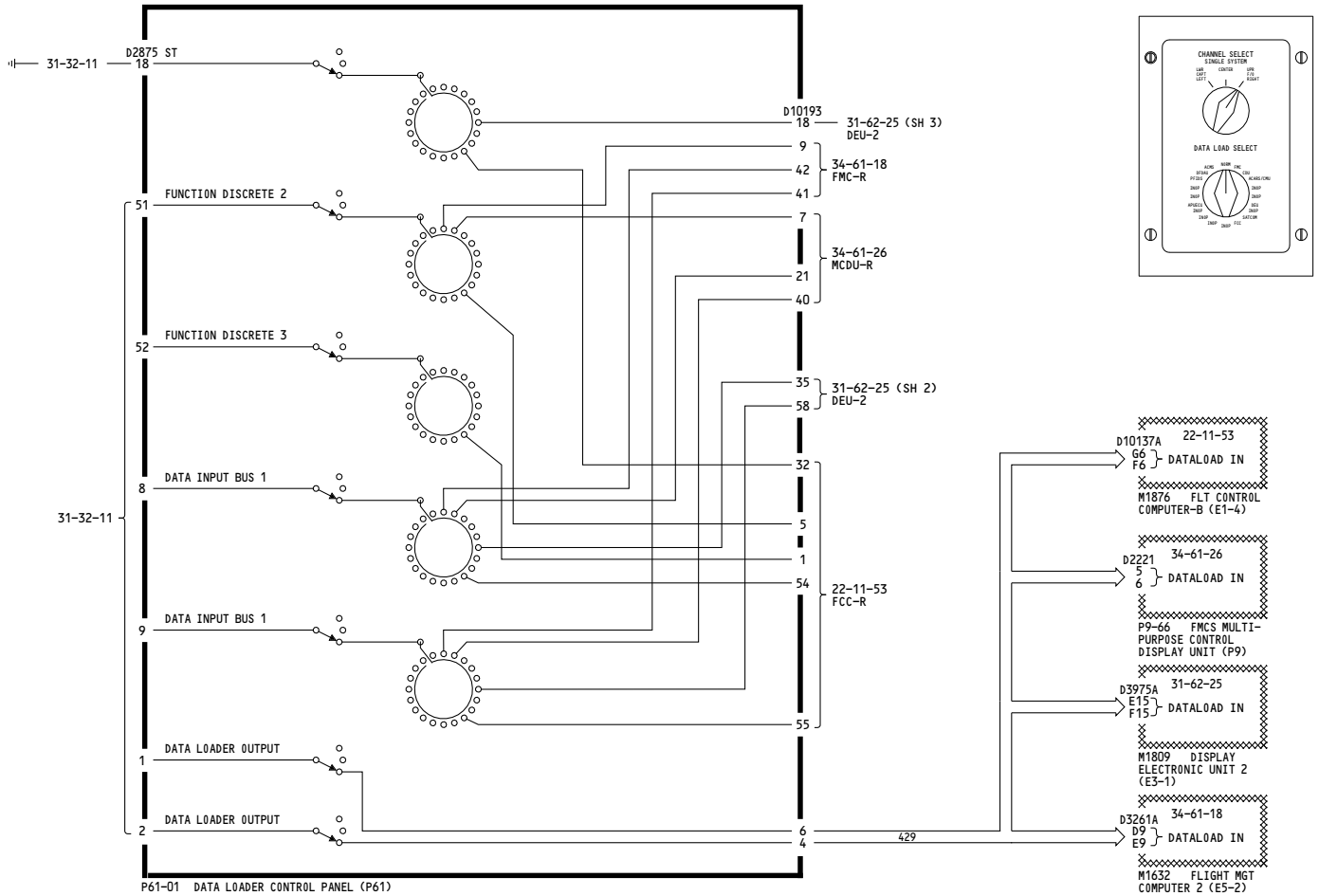

YT106-YT133

DATA LOADER INTERFACE (RIGHT)

D280A451

BOEING PROPRIETARY - Copyright © - Unpublished Work - See title page for details.

WIRING DIAGRAMS
23-27-11 23-27-12 31-31-01 31-31-02 33-11-21 33-11-41 34-61-12 34-61-15

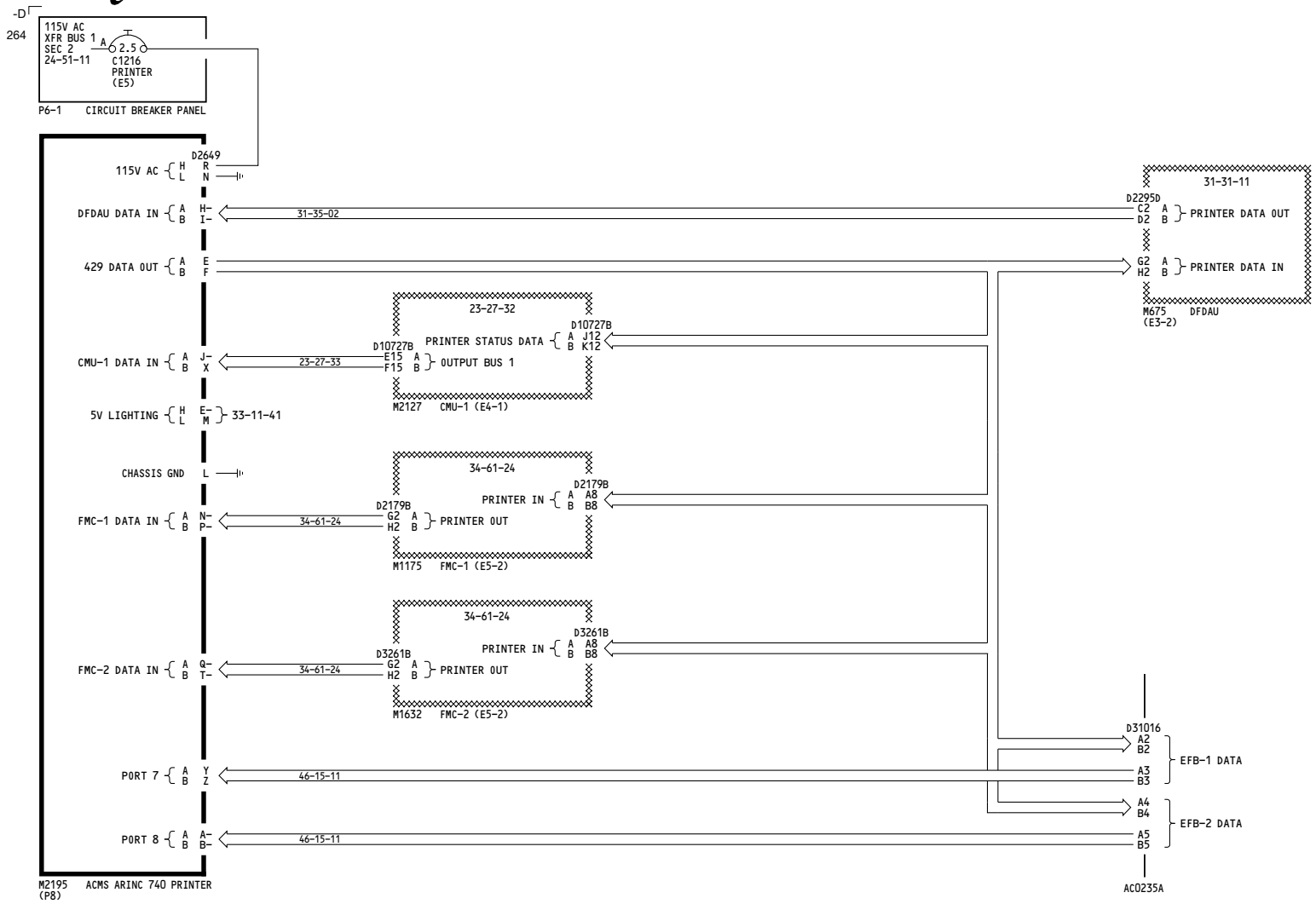

YT101-YT105

PRINTER INTERFACE

D280A451

BOEING PROPRIETARY - Copyright © - Unpublished Work - See title page for details.

WIRING DIAGRAMS
23-27-11 23-27-12 31-31-01 31-31-02 33-11-21 33-11-41 34-61-12 34-61-15

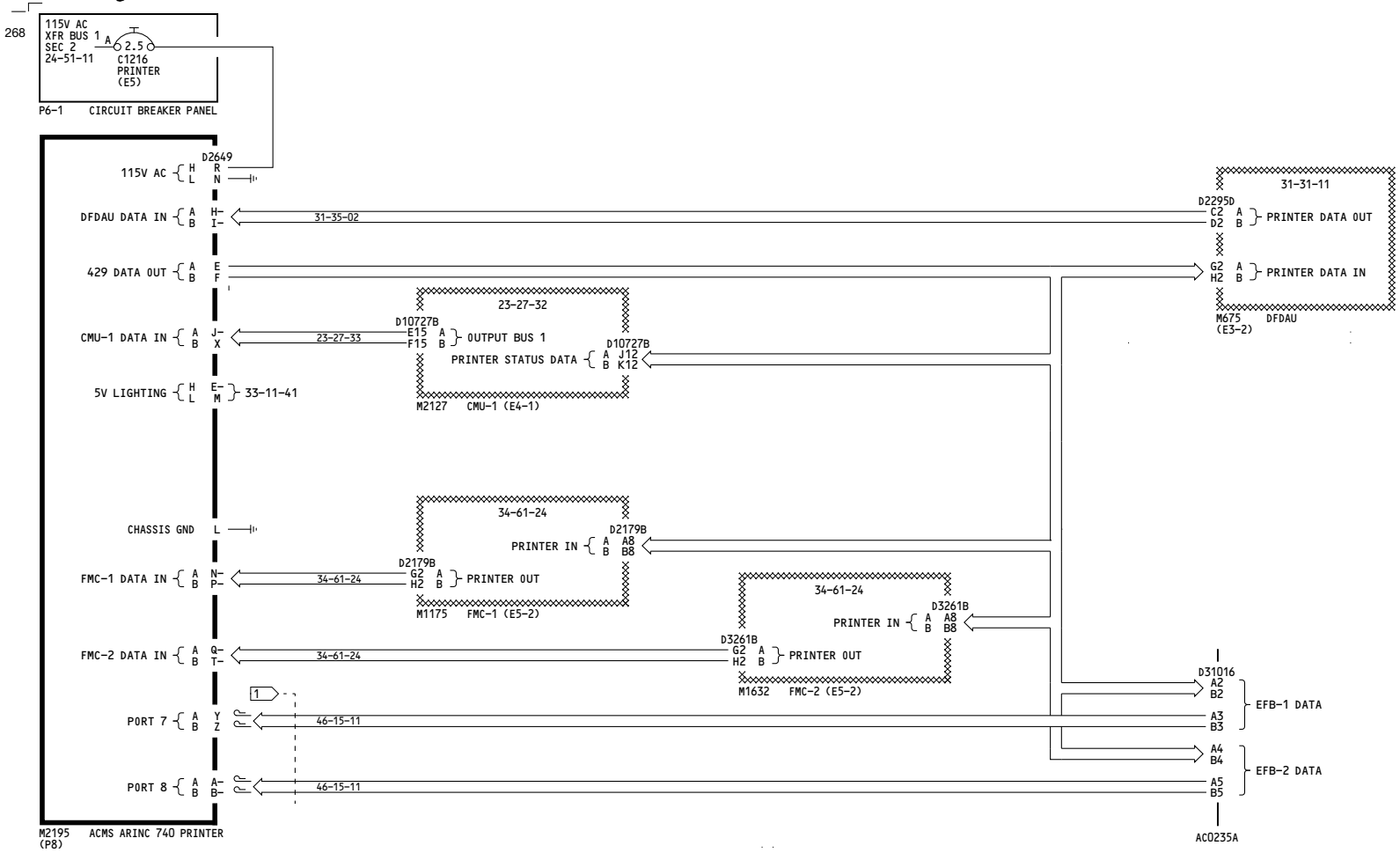

NOTES:

1 CAP & STOW NEAR D2649

YT106-YT120	PRINTER INTERFACE
	D280A451

BOEING PROPRIETARY - Copyright © - Unpublished Work - See title page for details.

WIRING DIAGRAMS
23-27-11 23-27-12 31-31-01 31-31-02 33-11-21 33-11-41 34-61-12 34-61-15

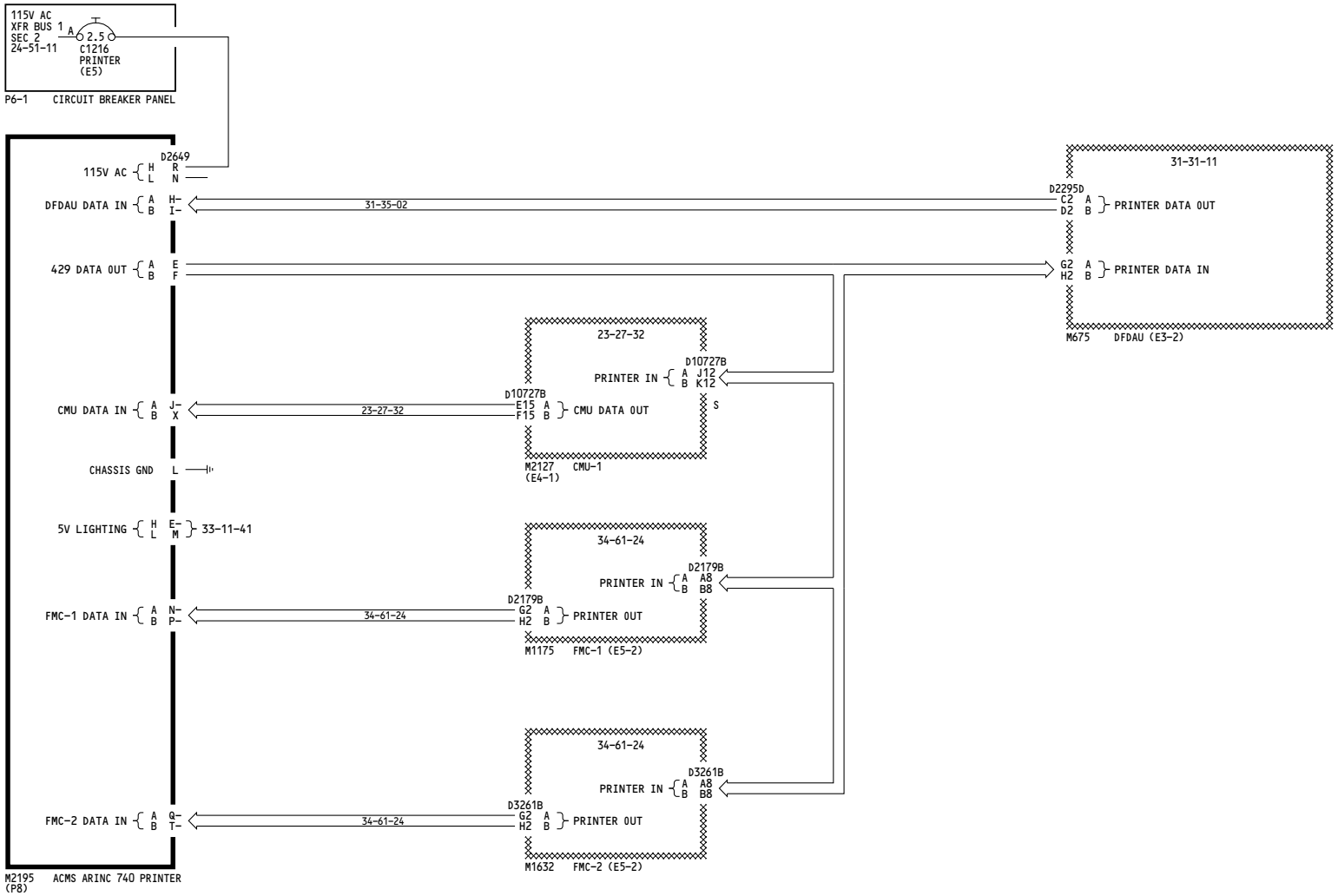

YT126-YT133

PRINTER INTERFACE

D280A451

BOEING PROPRIETARY - Copyright © - Unpublished Work - See title page for details.

WIRING DIAGRAMS
31-32-15 31-35-01

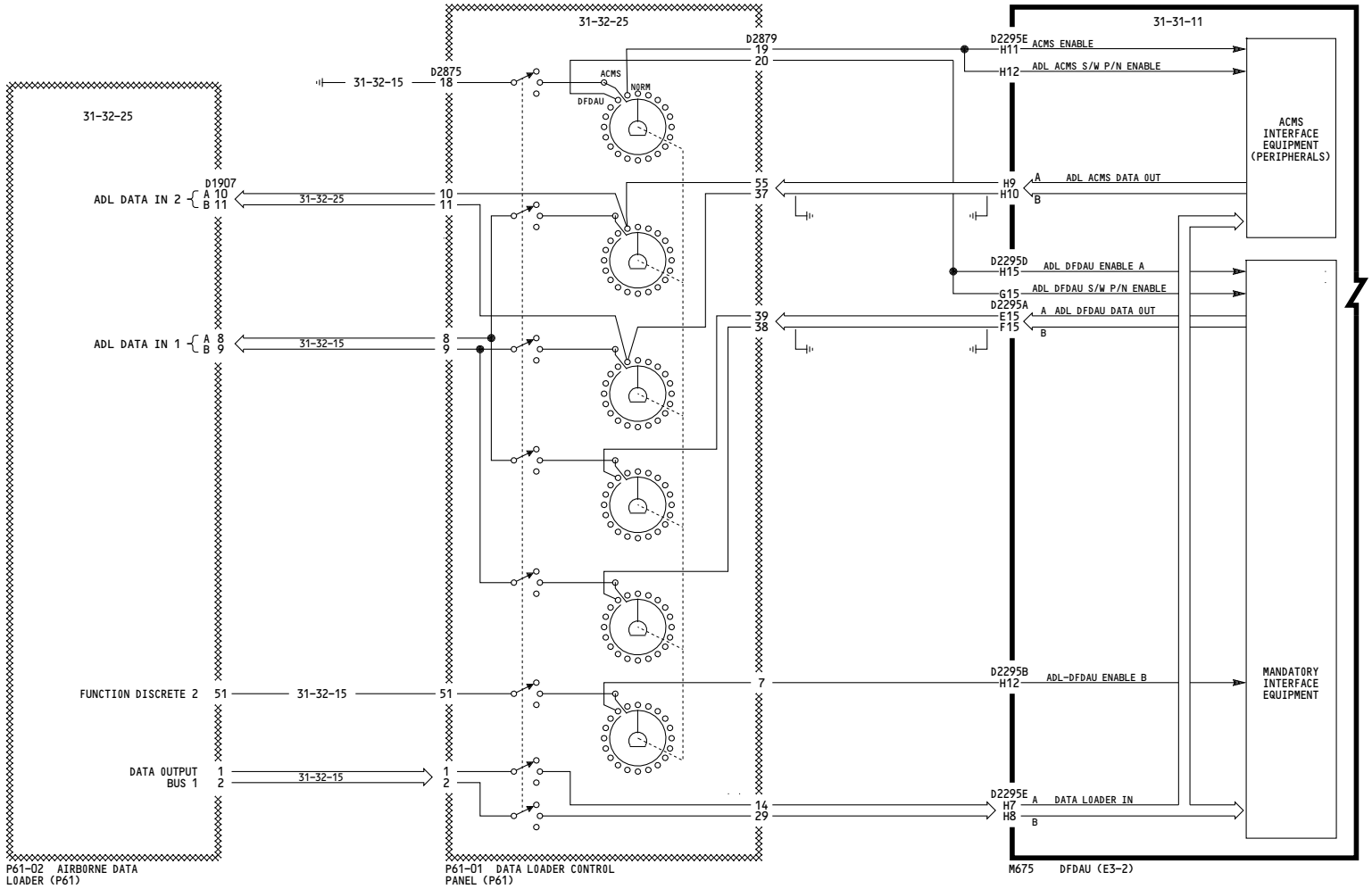

YT101-YT104

DIGITAL FLIGHT DATA RECORDER SYSTEM - DATA LOADER INTERFACE

D280A451

BOEING PROPRIETARY - Copyright © - Unpublished Work - See title page for details.

WIRING DIAGRAMS
31-32-15 31-35-01

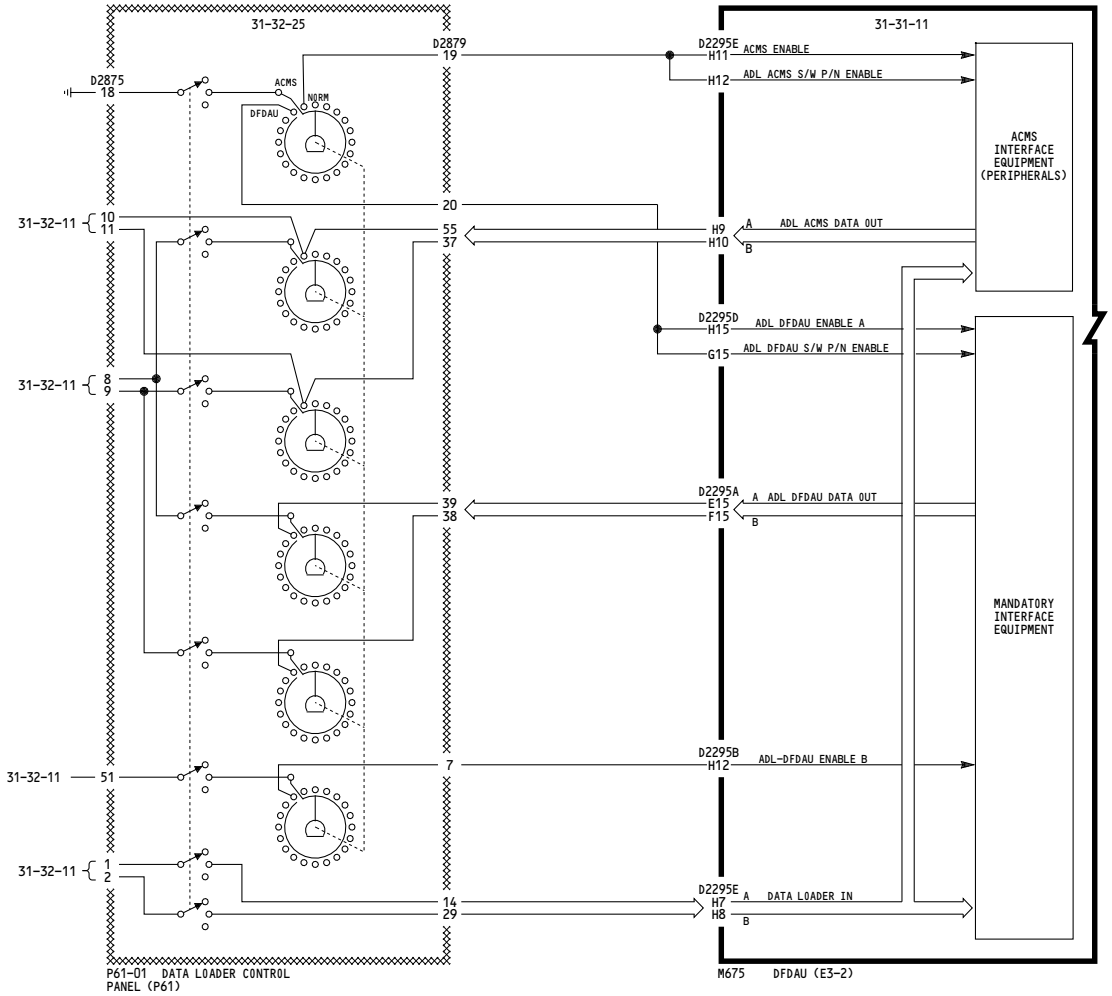

YT105-YT133

DIGITAL FLIGHT DATA RECORDER SYSTEM - DATA LOADER INTERFACE

D280A451

BOEING PROPRIETARY - Copyright © - Unpublished Work - See title page for details.

WIRING DIAGRAMS
23-27-11 23-27-12 31-31-01 31-31-02 33-11-21 33-11-41 34-61-12 34-61-15

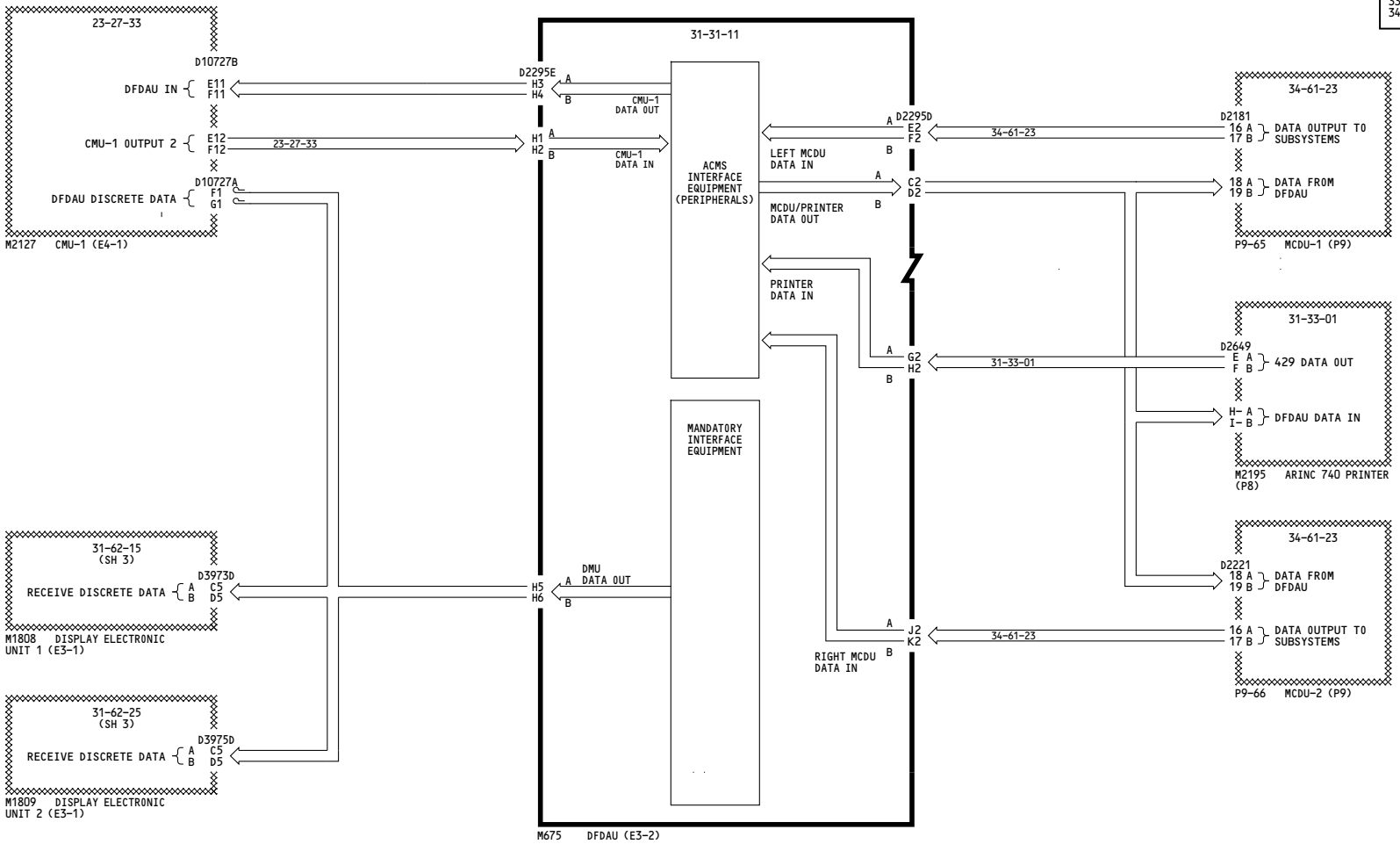

ALL	DIGITAL FLIGHT DATA RECORDER SYSTEM - ACMS INTERFACE D280A451

BOEING PROPRIETARY - Copyright © - Unpublished Work - See title page for details.

-A
44

WIRING DIAGRAMS
31-31-01 31-31-02 34-61-12 34-61-33

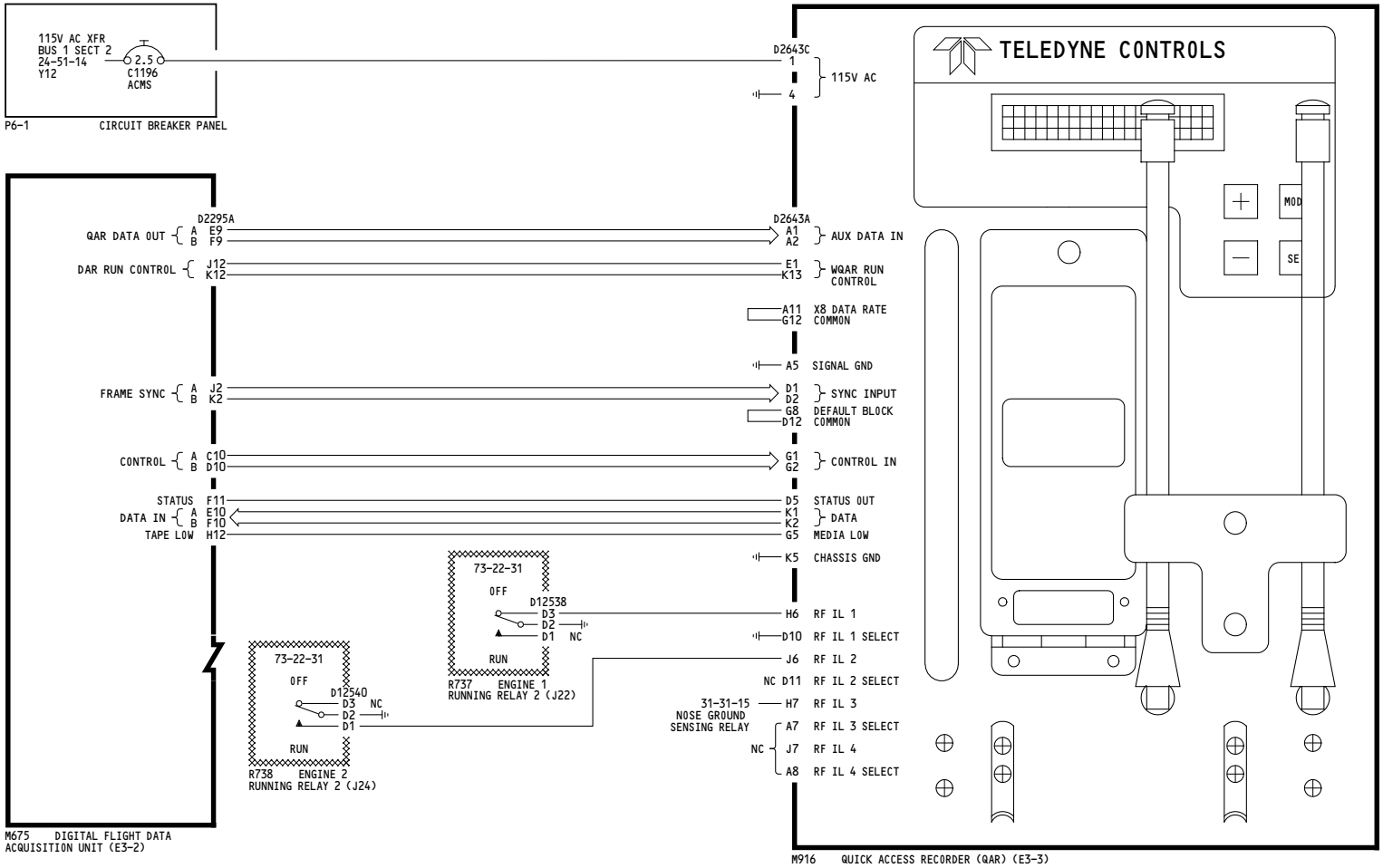

ALL	DIGITAL FLIGHT DATA RECORDER SYSTEM - ACMS INTERFACE D280A451

BOEING PROPRIETARY - Copyright © - Unpublished Work - See title page for details.

WIRING DIAGRAMS
31-31-11 31-31-13 34-45-01 34-61-02 34-61-06 34-61-32 77-12-31

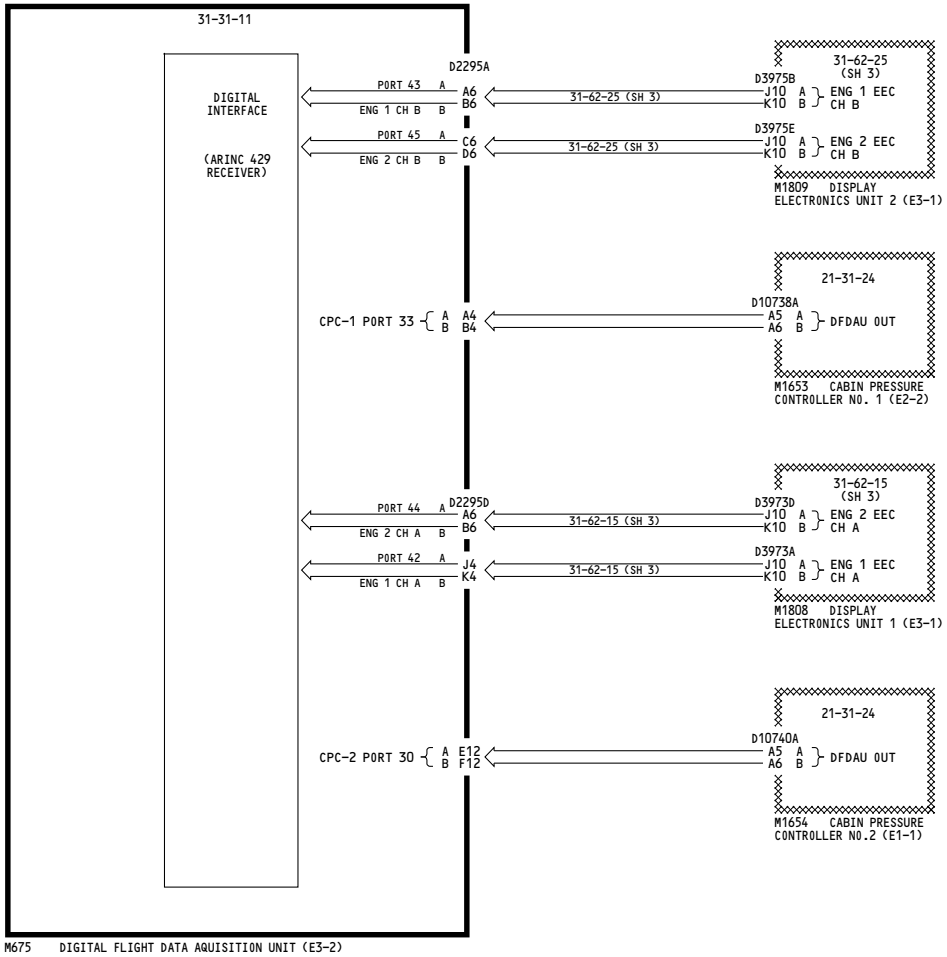

BOEING PROPRIETARY - Copyright © - Unpublished Work - See title page for details.

-C
30

WIRING DIAGRAMS
31-31-11 31-31-13 34-45-01 34-61-02 34-61-06 34-61-32 77-12-31 21-31-22

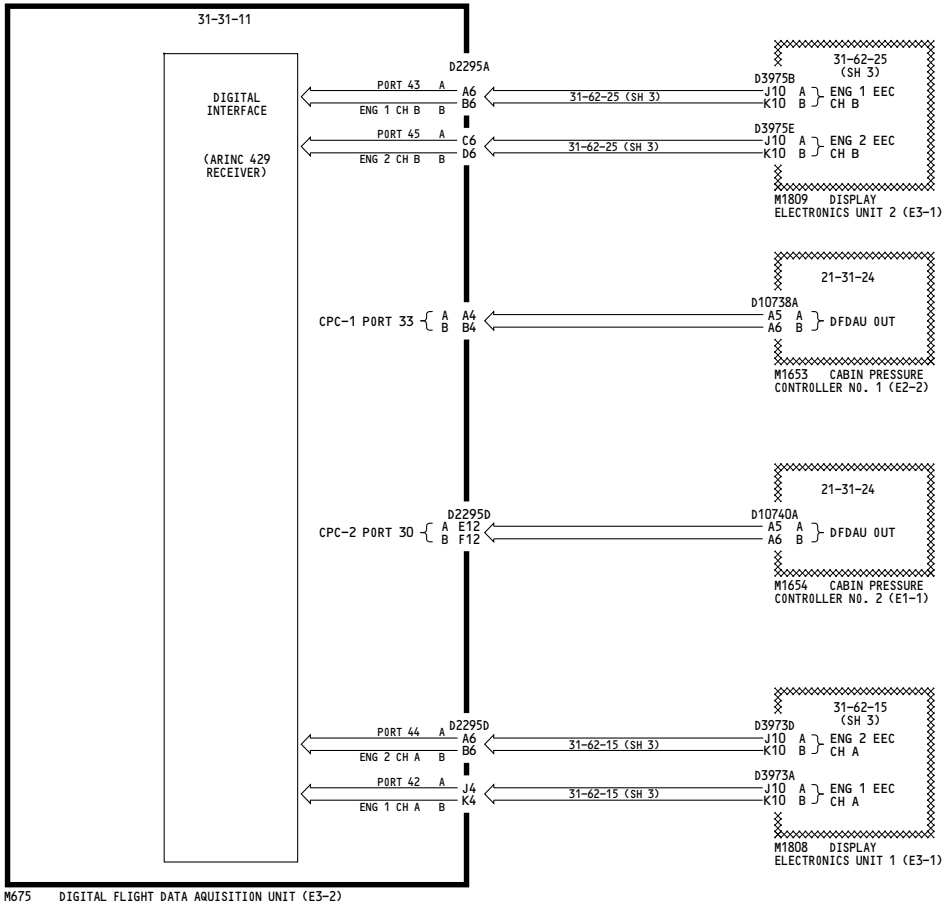

BOEING PROPRIETARY - Copyright © - Unpublished Work - See title page for details.

WIRING DIAGRAMS
31-31-11 31-31-13 34-45-01 34-61-02 34-61-06 34-61-32 77-12-31

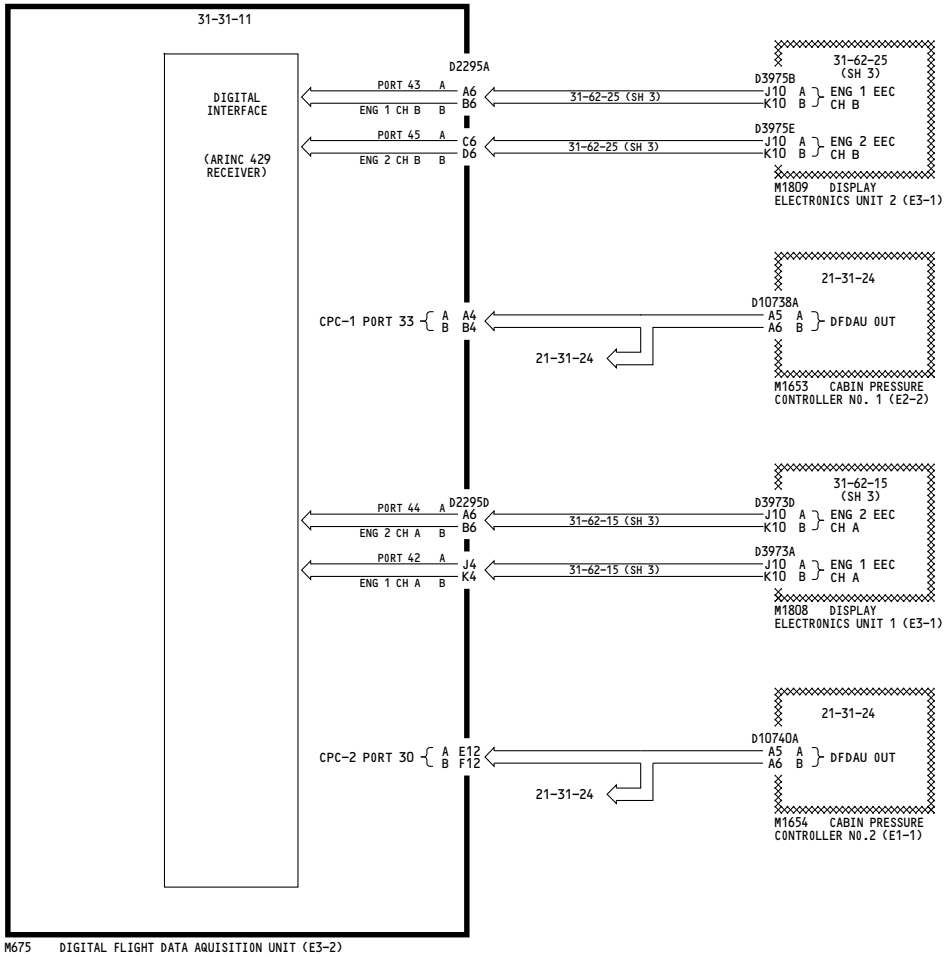

BOEING PROPRIETARY - Copyright © - Unpublished Work - See title page for details.

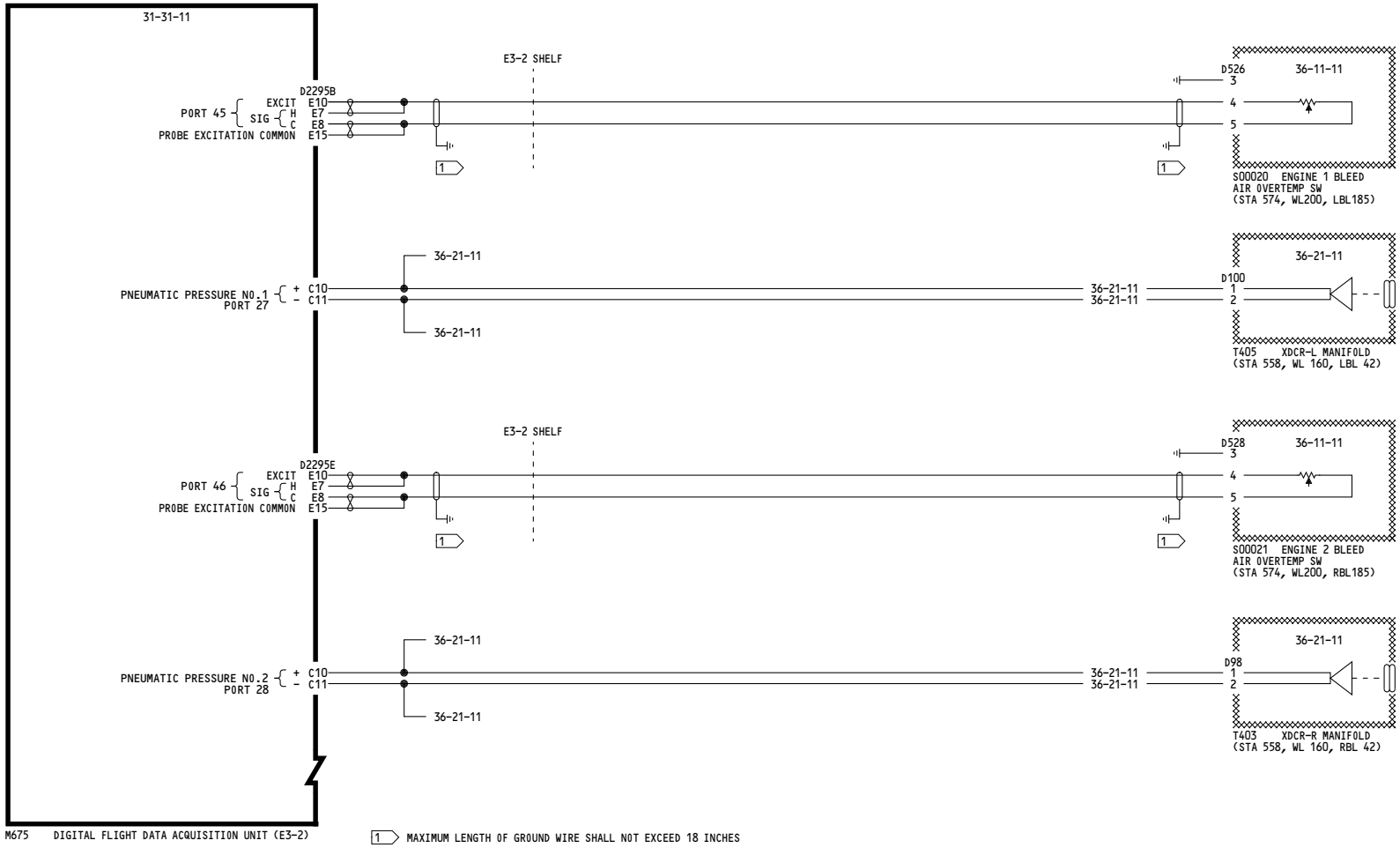

BOEING PROPRIETARY - Copyright © - Unpublished Work - See title page for details.

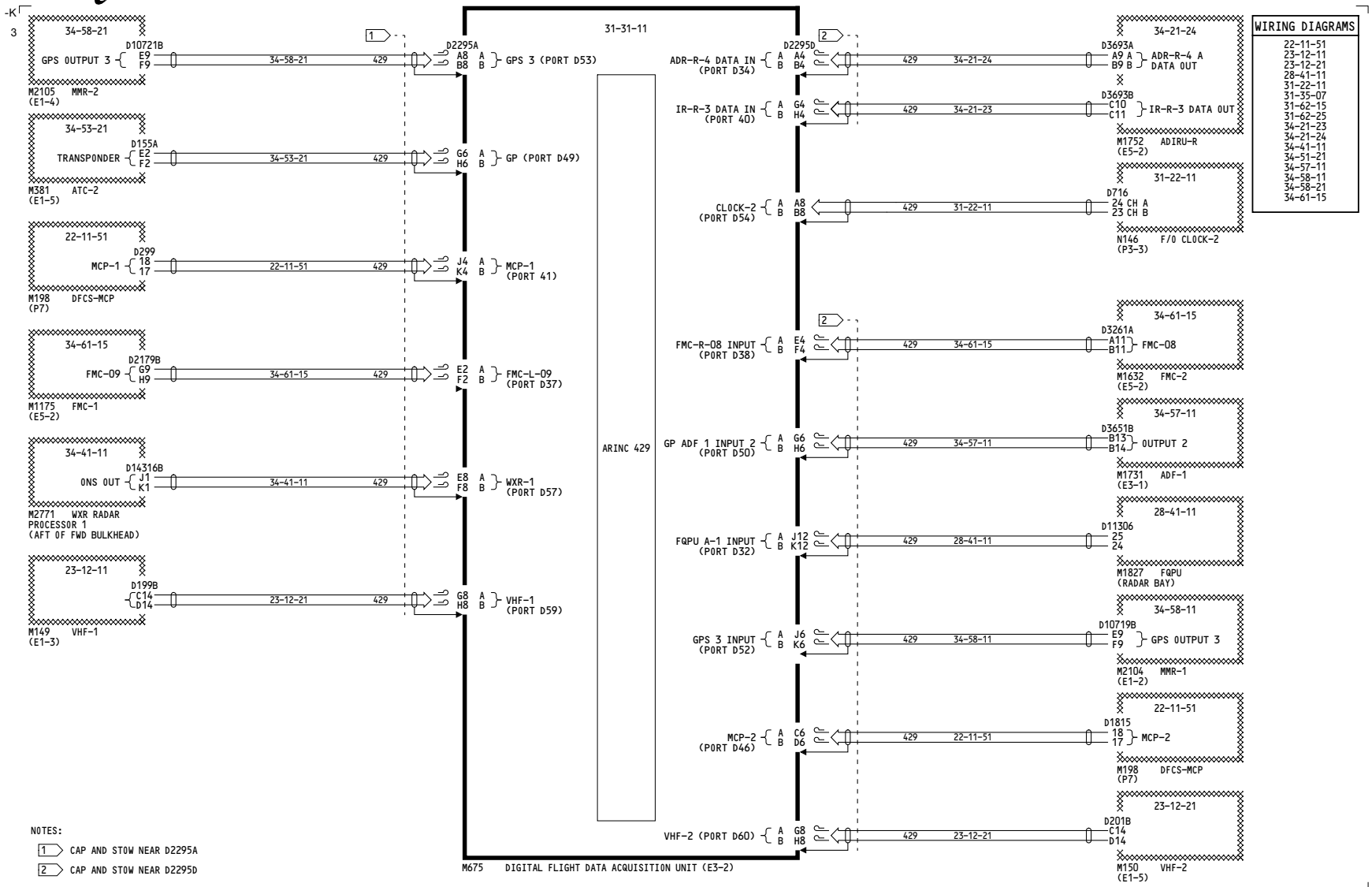

WIRING DIAGRAMS
22-11-51
23-12-11
23-12-21
28-41-11
31-22-11
31-35-07
31-62-15
31-62-25
34-21-23
34-21-24
34-41-11
34-51-21
34-57-11
34-58-11
34-58-21
34-61-15

YT104-YT109, YT126-YT129

ACMS DIGITAL INTERFACE GROUP 2

D280A451

BOEING PROPRIETARY - Copyright © - Unpublished Work - See title page for details.

-B
24

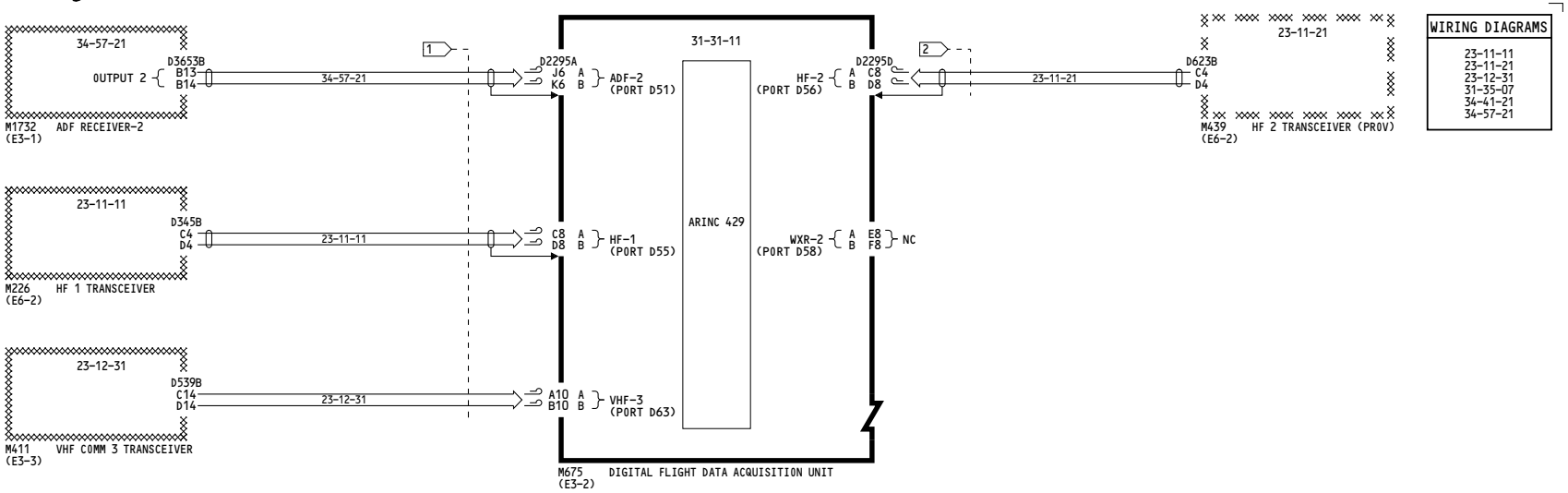

WIRING DIAGRAMS
23-11-11 23-11-21 23-12-31 31-35-07 34-41-21 34-57-21

NOTES:

1 CAP AND STOW NEAR D2295A

2 CAP AND STOW NEAR D2295D

YT104-YT109, YT126-YT129	**ACMS DIGITAL INTERFACE GROUP 2** D280A451

BOEING PROPRIETARY - Copyright © - Unpublished Work - See title page for details.

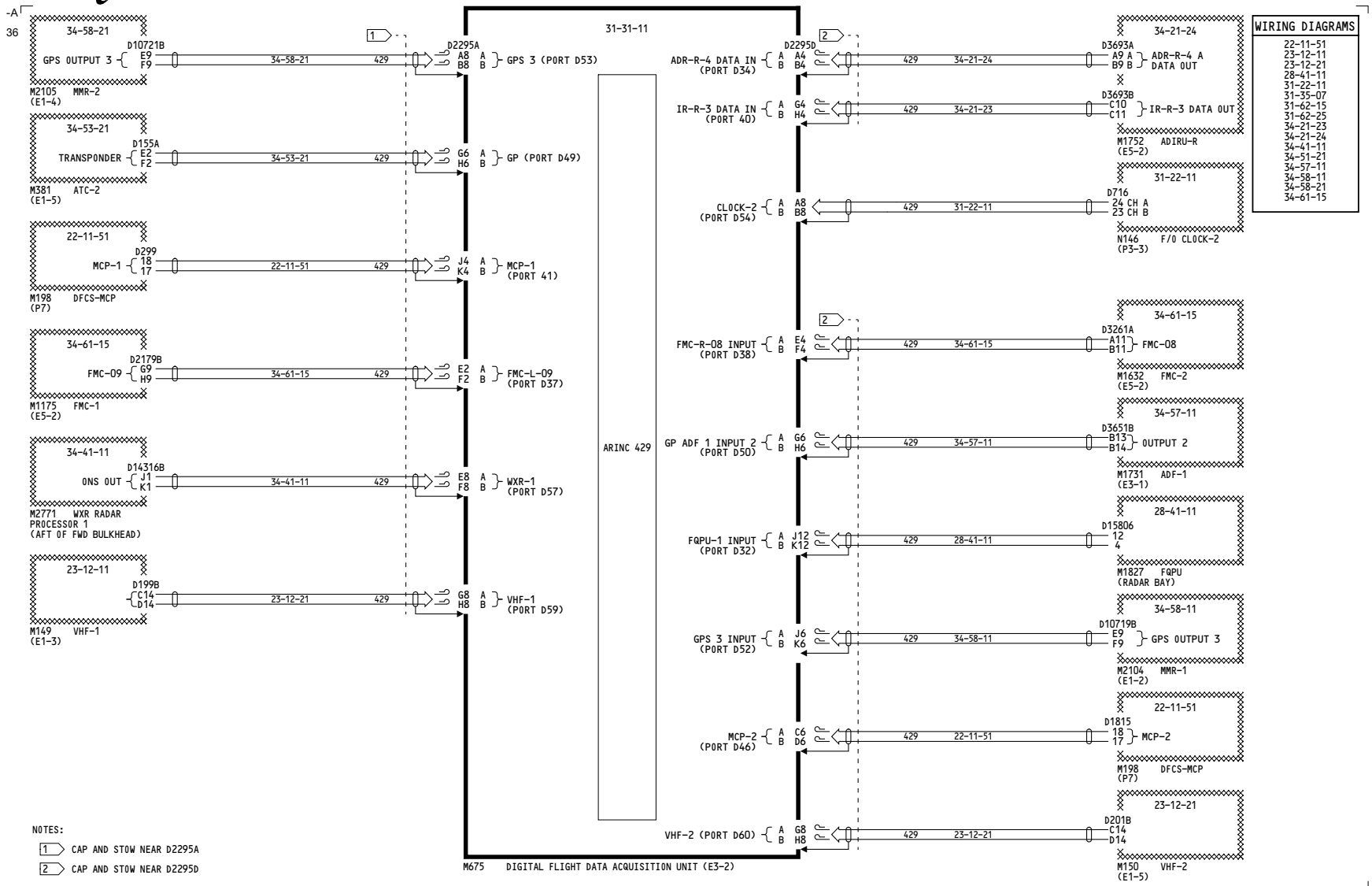

WIRING DIAGRAMS
22-11-51
23-12-11
23-12-21
28-41-11
31-22-11
31-35-07
31-62-15
31-62-25
34-21-23
34-21-24
34-41-11
34-51-21
34-57-11
34-58-11
34-58-21
34-61-15

YT110-YT120, YT130-YT133

ACMS DIGITAL INTERFACE GROUP 2

D280A451

BOEING PROPRIETARY - Copyright © - Unpublished Work - See title page for details.

-B
24

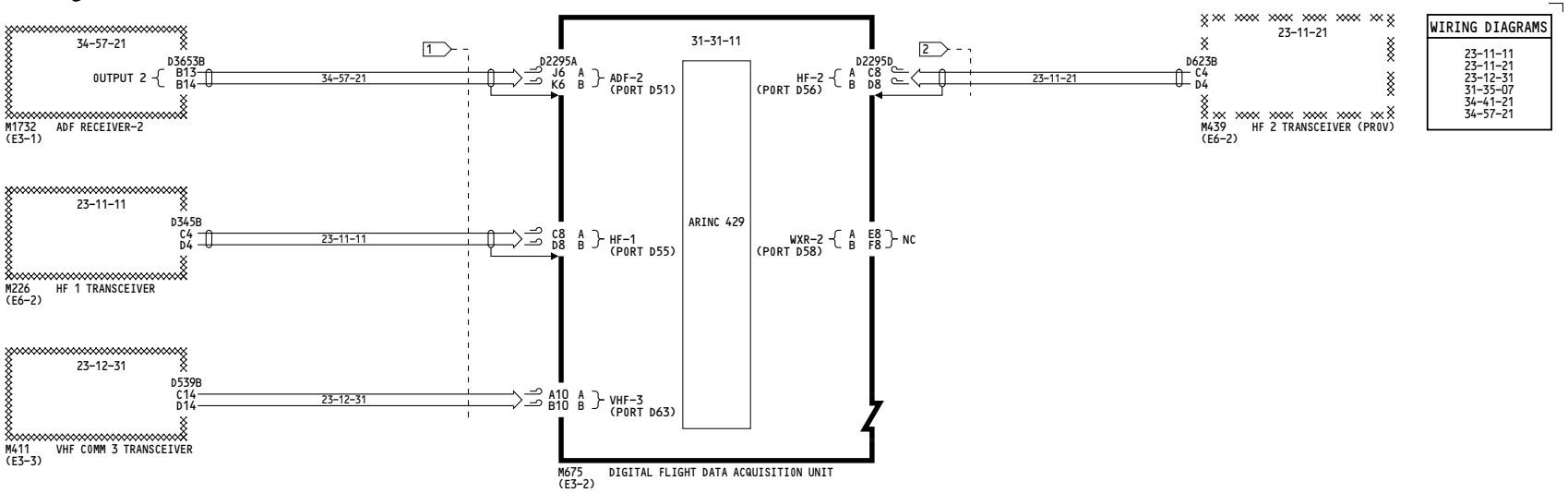

WIRING DIAGRAMS
23-11-11 23-11-21 23-12-31 31-35-07 34-41-21 34-57-21

NOTES:

1 CAP AND STOW NEAR D2295A

2 CAP AND STOW NEAR D2295D

YT110-YT120, YT130-YT133	**ACMS DIGITAL INTERFACE GROUP 2** D280A451

BOEING PROPRIETARY - Copyright © - Unpublished Work - See title page for details.

WIRING DIAGRAMS
23-12-41 31-31-11

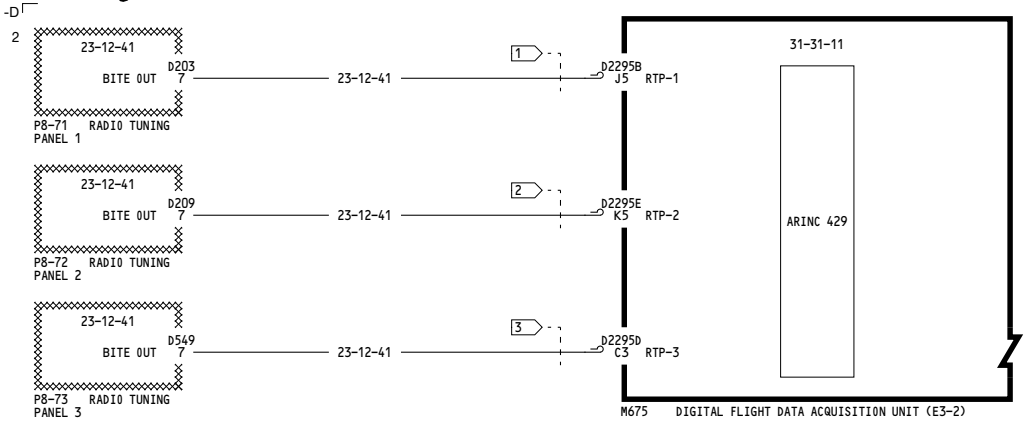

NOTES:

1. CAP AND STOW NEAR D2295B
2. CAP AND STOW NEAR D2295E
3. CAP AND STOW NEAR D2295D

YT104-YT133	ACMS DISCRETE INTERFACE GROUP 2
	D280A451

BOEING PROPRIETARY - Copyright © - Unpublished Work - See title page for details.

WIRING DIAGRAMS
31-31-11 31-35-09 46-13-11

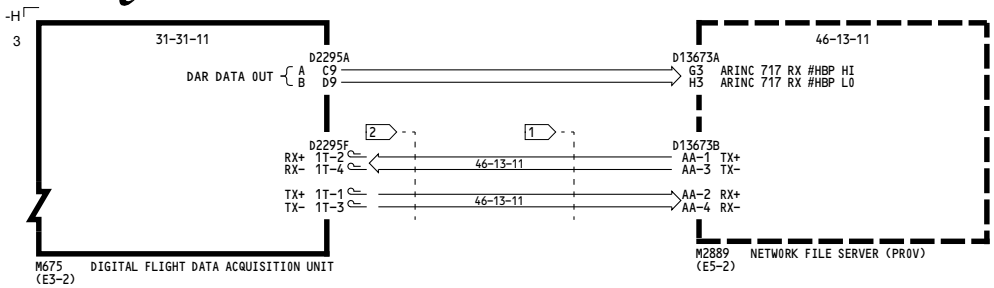

NOTES:

1 USE BMS 13-72T03C04G024

2 CAP AND STOW NEAR D2295F

YT104	ACMS NFS INTERFACE
	D280A451

BOEING PROPRIETARY - Copyright © - Unpublished Work - See title page for details.

-E
7

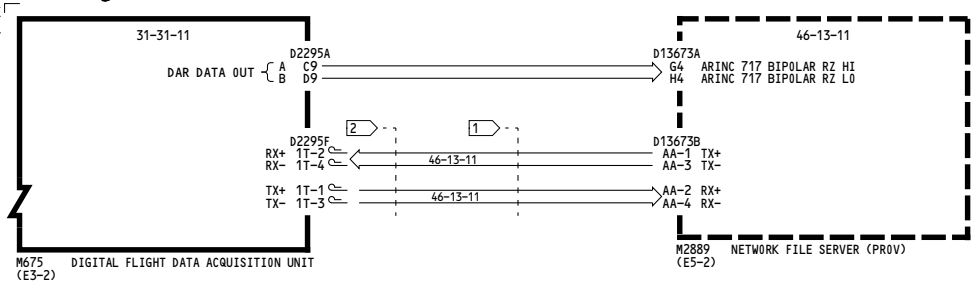

WIRING DIAGRAMS
31-31-11 31-35-09 46-13-11

NOTES:

1. USE BMS 13-72T03C04G024
2. CAP AND STOW NEAR D2295F

YT105, YT126-YT133	ACMS NFS INTERFACE D280A451

BOEING PROPRIETARY - Copyright © - Unpublished Work - See title page for details.

WIRING DIAGRAMS
31-31-11 31-35-09 46-13-11

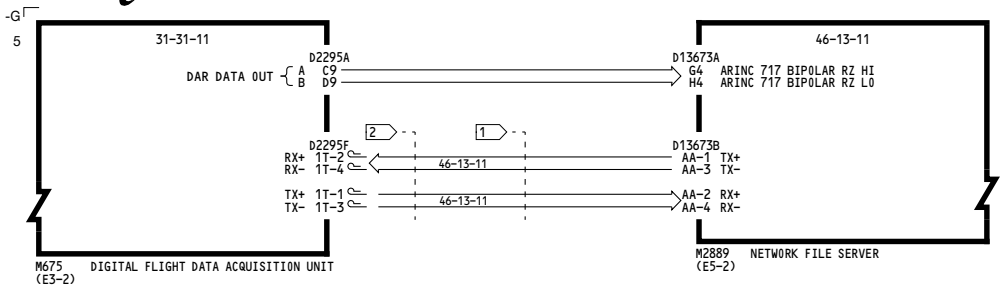

NOTES:

1 USE BMS 13-72T03C04G024

2 CAP AND STOW NEAR D2295F

YT106-YT120	ACMS NFS INTERFACE D280A451

BOEING PROPRIETARY - Copyright © - Unpublished Work - See title page for details.

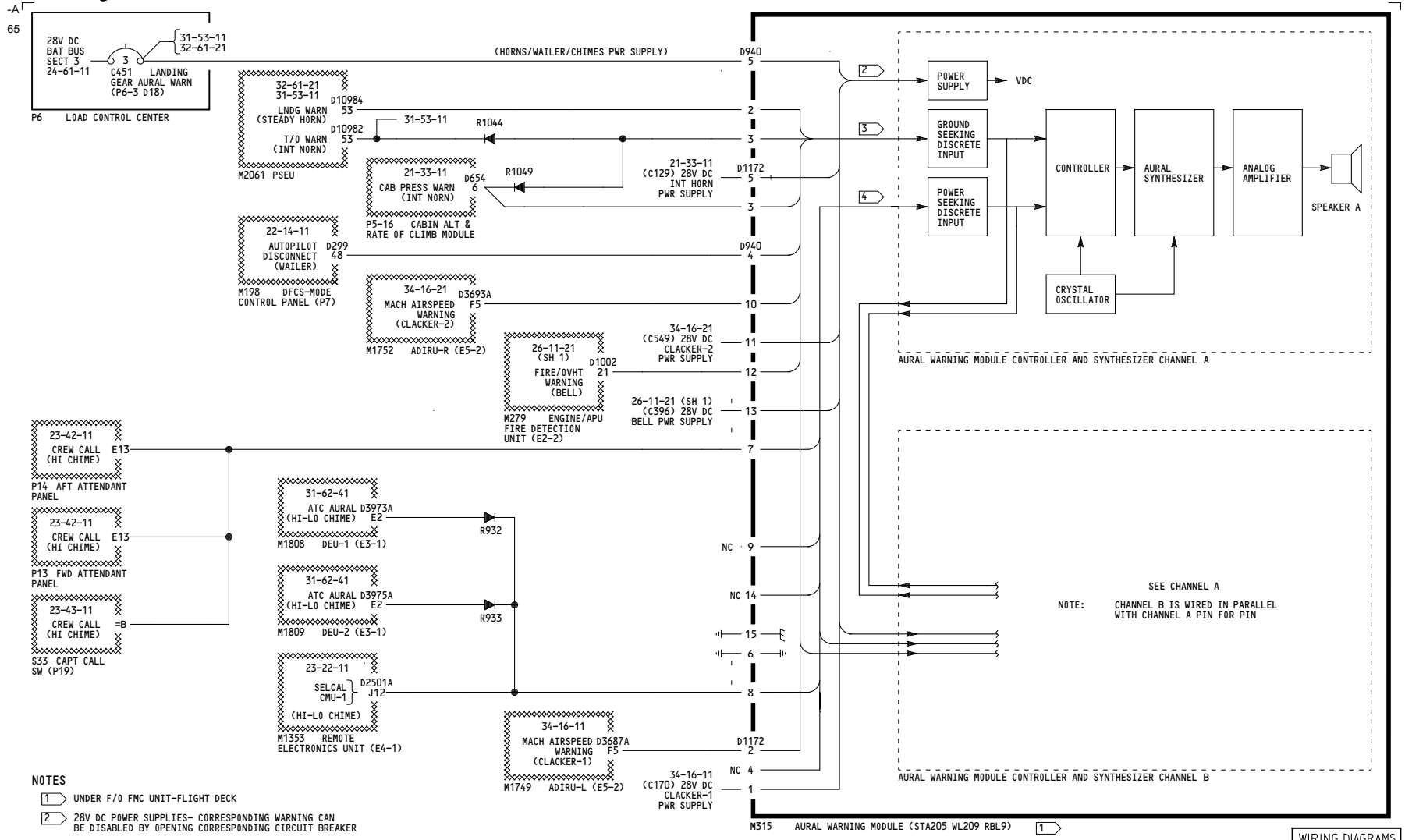

NOTES

1. UNDER F/O FMC UNIT-FLIGHT DECK
2. 28V DC POWER SUPPLIES- CORRESPONDING WARNING CAN BE DISABLED BY OPENING CORRESPONDING CIRCUIT BREAKER
3. ALL SIGNAL INPUTS ARE GROUND (LOW) WHEN ACTIVATED
4. ALL SIGNAL INPUTS ARE 28V DC (HIGH) WHEN ACTIVATED

YT101-YT105, YT126-YT133	**AURAL WARNING SYSTEMS**
	D280A451

BOEING PROPRIETARY - Copyright © - Unpublished Work - See title page for details.

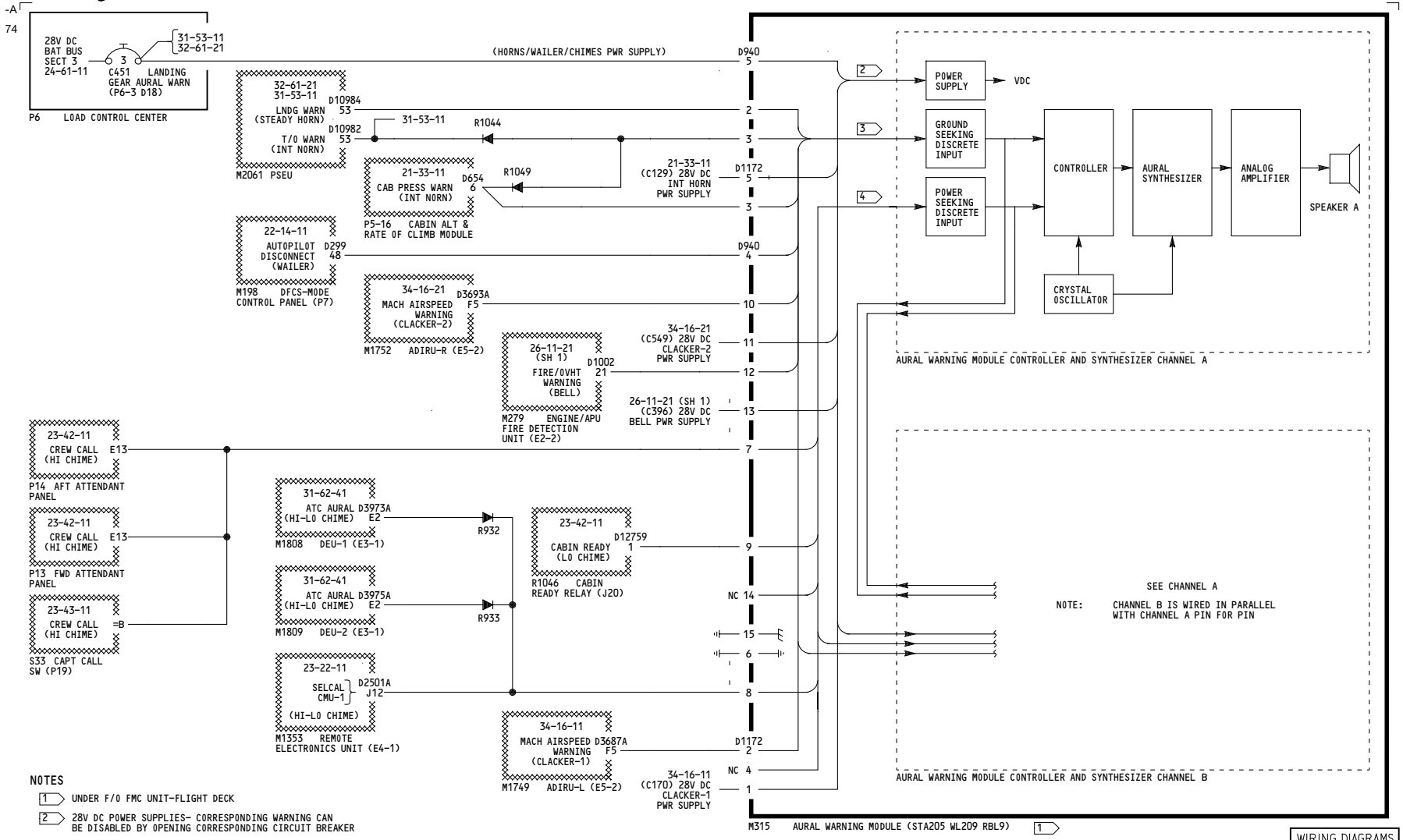

NOTES

1. UNDER F/O FMC UNIT-FLIGHT DECK
2. 28V DC POWER SUPPLIES- CORRESPONDING WARNING CAN BE DISABLED BY OPENING CORRESPONDING CIRCUIT BREAKER
3. ALL SIGNAL INPUTS ARE GROUND (LOW) WHEN ACTIVATED
4. ALL SIGNAL INPUTS ARE 28V DC (HIGH) WHEN ACTIVATED

YT106-YT120	AURAL WARNING SYSTEMS
	D280A451

BOEING PROPRIETARY - Copyright © - Unpublished Work - See title page for details.

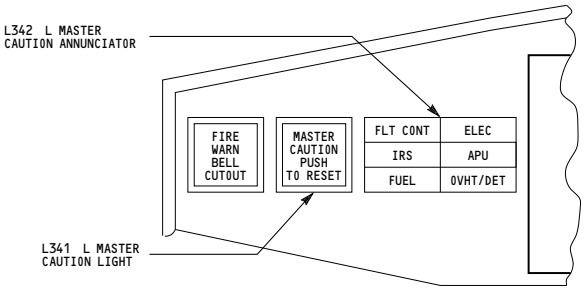

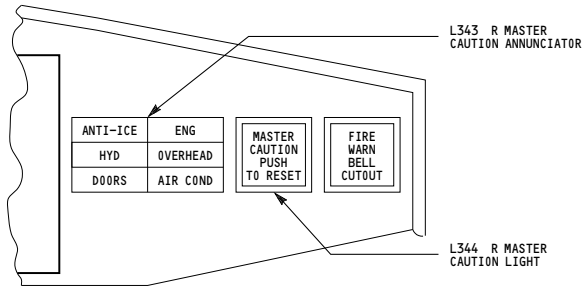

P7 LIGHT SHIELD

MASTER CAUTION SYSTEM		PANEL NUMBERS
31-52-11	POWER & CONTROL	P6; P7; M469
31-52-21	HYDRAULIC CONTROL	P5-8
31-52-25	FLIGHT CONTROLS	P5-3
31-52-31	ELECTRICAL CONTROL	P5-5
31-52-32	ELECTRICAL CONTROL	P5-4; -5; -13
31-52-35	APU CONTROL	P5-4
31-52-41	FUEL CONTROL	P5-2
31-52-45	OVERHEAT DETECTION	P8-1

MASTER CAUTION SYSTEM		PANEL NUMBERS
31-52-51	AIR CONDITIONING CONTROL	P5-10; -17
31-52-52	AIR CONDITIONING CONTROL	P5-10
31-52-55	ANTI-ICE CONTROL	P5-9
31-52-56	ANTI-ICE CONTROL	P5-9; -11
31-52-61	ENGINE CONTROL	P5-68
31-52-65	DOOR WARNING	P5-20
31-52-71	IRS CONTROL	P5-69; M1206
31-52-75	OVERHEAD CONTROL	P5-14; -19; -80; T

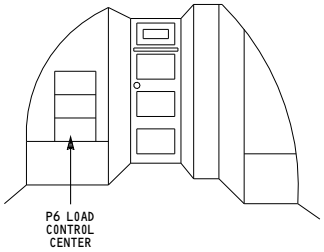

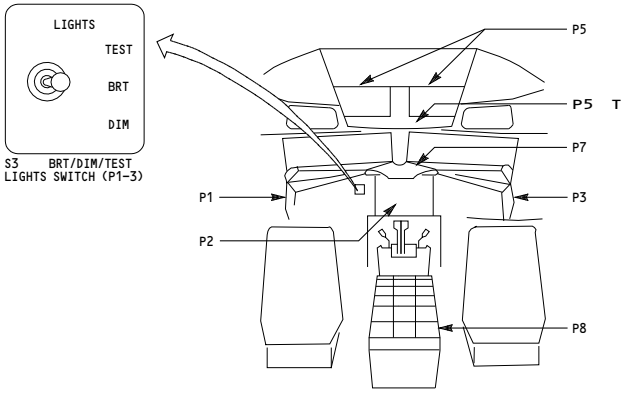

BOEING PROPRIETARY - Copyright © - Unpublished Work - See title page for details.

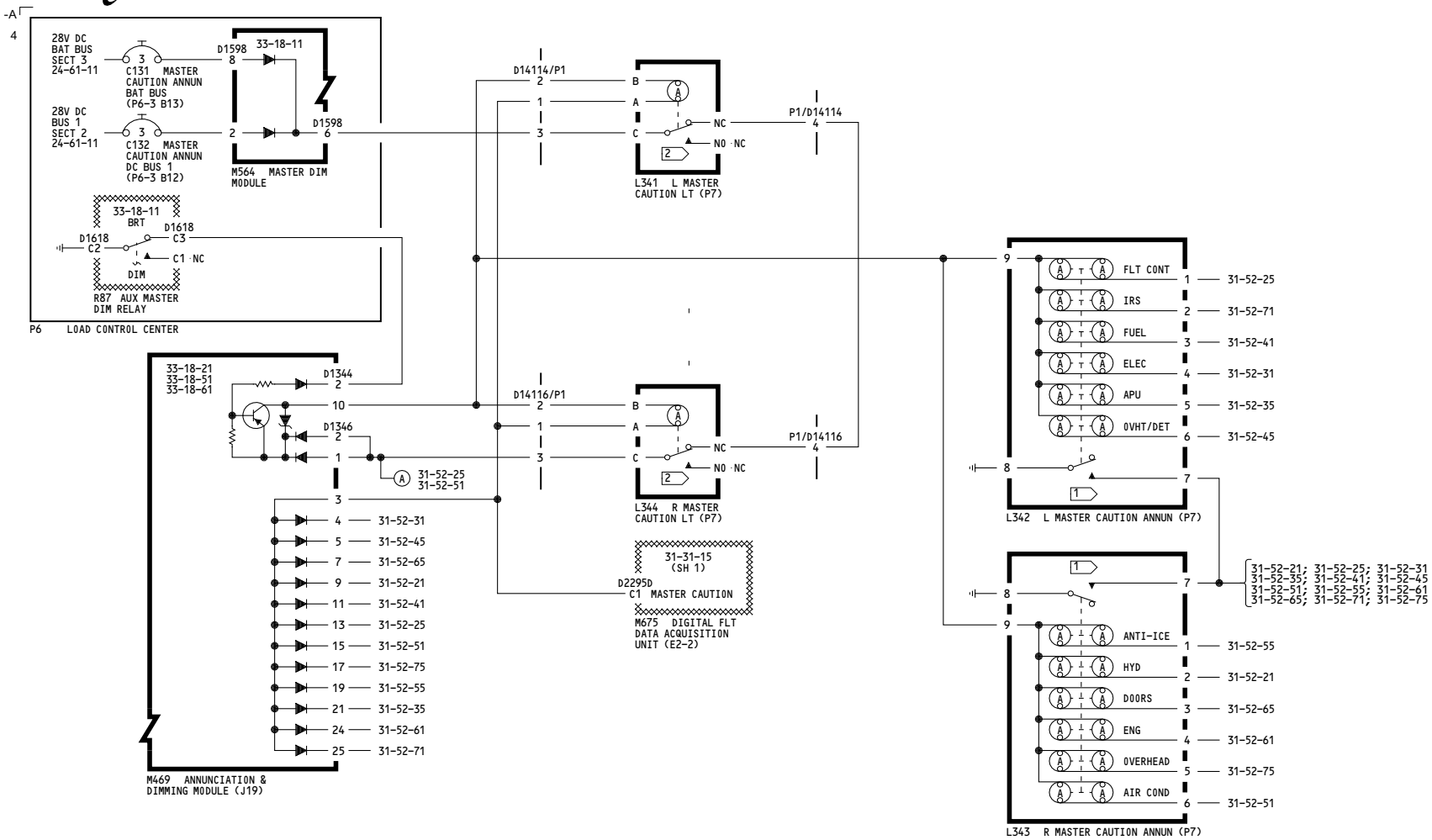

NOTES:

1. PRESSING THE LIGHT GROUNDS THE LOGIC ON ALL MASTER CAUTION CARDS TO ILLUMINATE THE MC LIGHT. WHEN THE LIGHT IS RELEASED ANY UNCLEARED FAULT KEEPS ITS CORRESPONDING ANNUNCIATOR ILLUMINATED.

2. PRESSING THE LIGHT REMOVES THE POWER TO ALL MASTER CAUTION CARDS TO ALLOW RESETTING THE LOGIC FOR ANY ADDITIONAL FAULT ANNUNCIATION.

ALL	MASTER CAUTION SYSTEM-POWER & CONTROL
	D280A451

WIRING DIAGRAMS
31-52-11

BOEING PROPRIETARY - Copyright © - Unpublished Work - See title page for details.

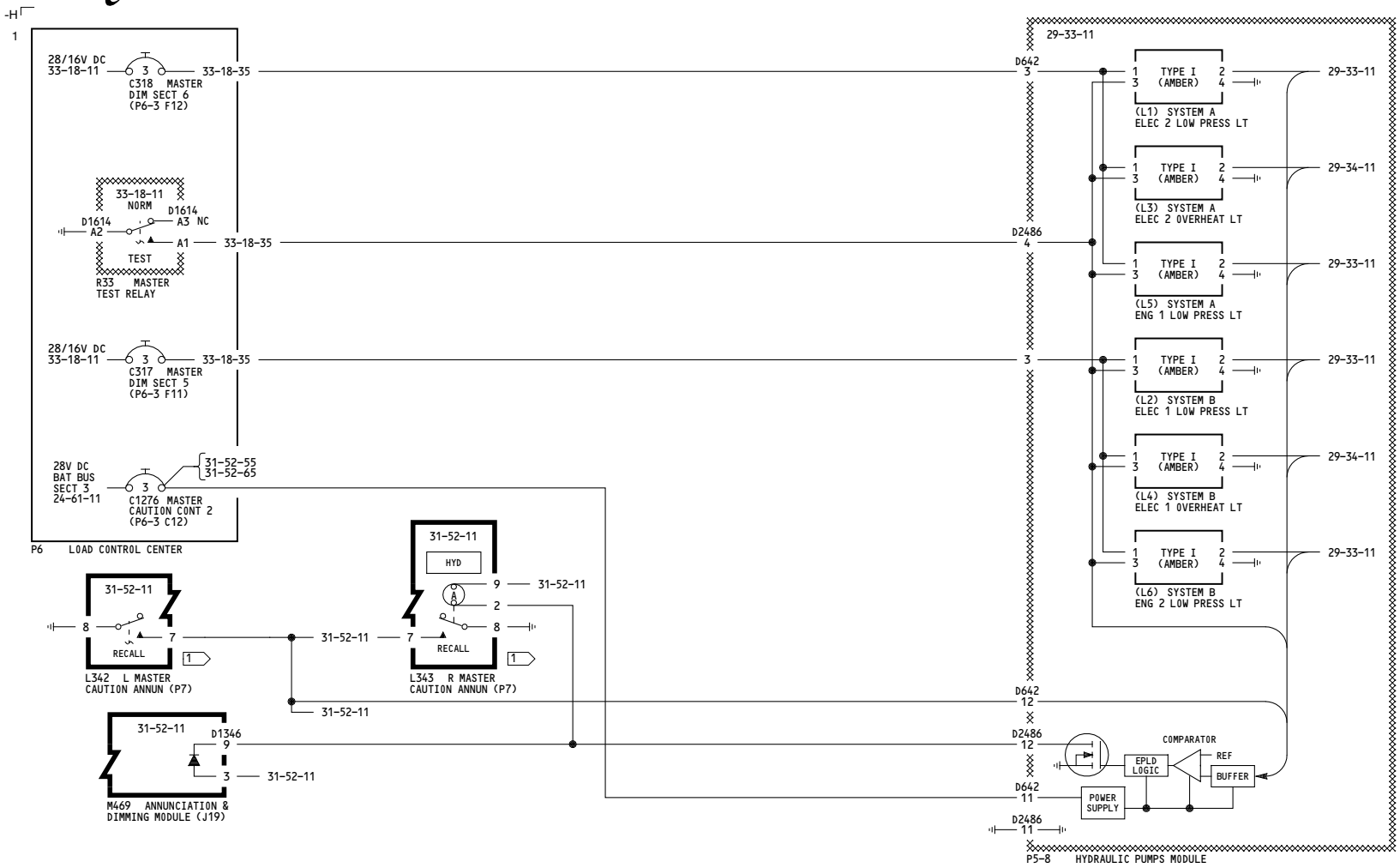

NOTES:

1 PRESSING THE LIGHT GROUNDS THE LOGIC THUS ILLUMINATING ALL ANNUNCIATORS. WHEN THE LIGHT IS RELEASED ANY UNCLEARED FAULT WILL KEEP ITS CORRESPONDING ANNUNCIATOR ILLUMINATED.

ALL	**MASTER CAUTION SYSTEM-HYDRAULIC CONTROL** D280A451

WIRING DIAGRAMS
31-52-21

BOEING PROPRIETARY - Copyright © - Unpublished Work - See title page for details.

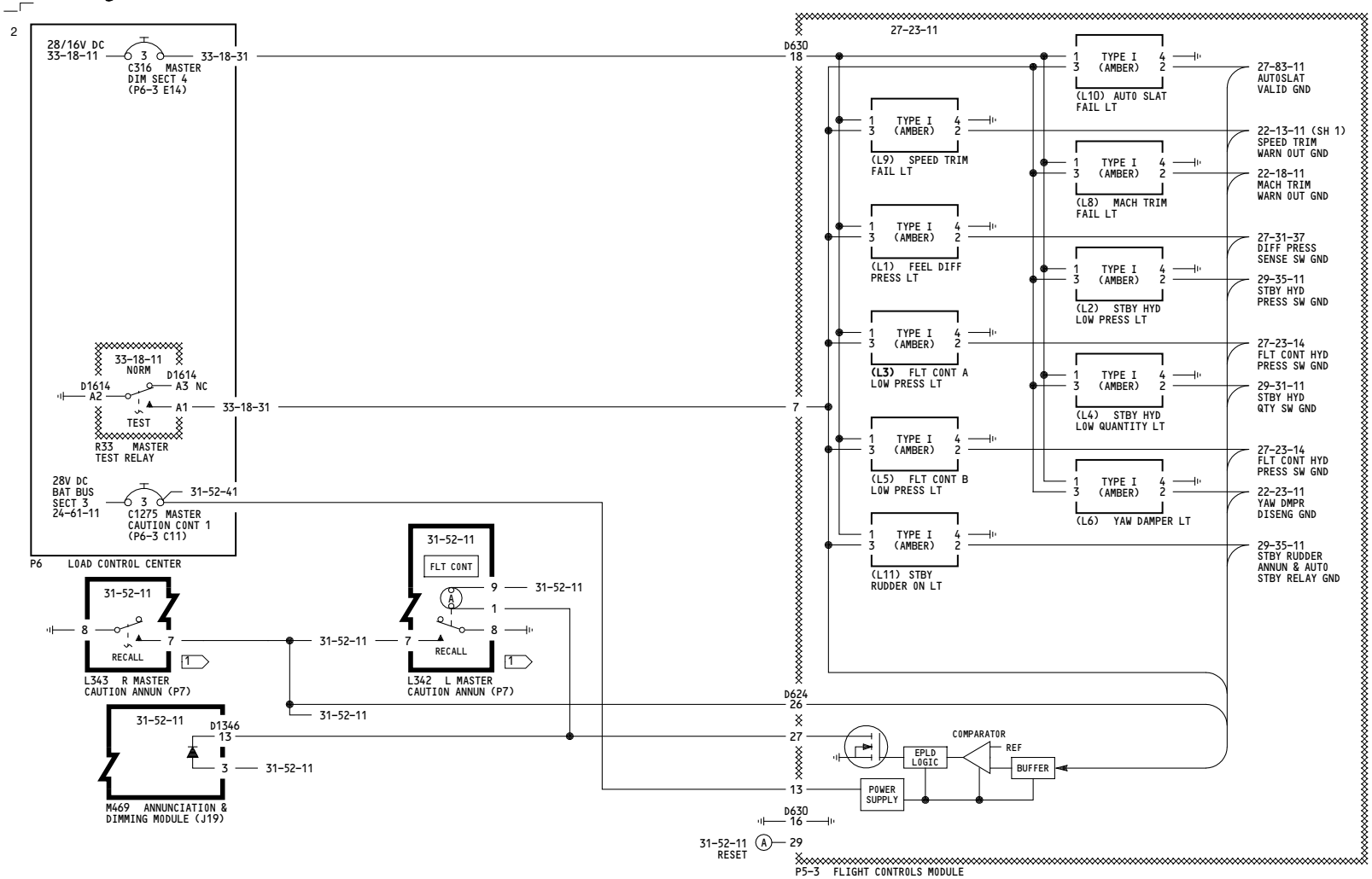

NOTES:

1 PRESSING THE LIGHT GROUNDS THE LOGIC THUS ILLUMINATING ALL ANNUNCIATORS. WHEN THE LIGHT IS RELEASED ANY UNCLEARED FAULT WILL KEEP ITS CORRESPONDING ANNUNCIATOR ILLUMINATED.

ALL	MASTER CAUTION SYSTEM-FLIGHT CONTROLS
	D280A451

WIRING DIAGRAMS
31-52-25

BOEING PROPRIETARY - Copyright © - Unpublished Work - See title page for details.

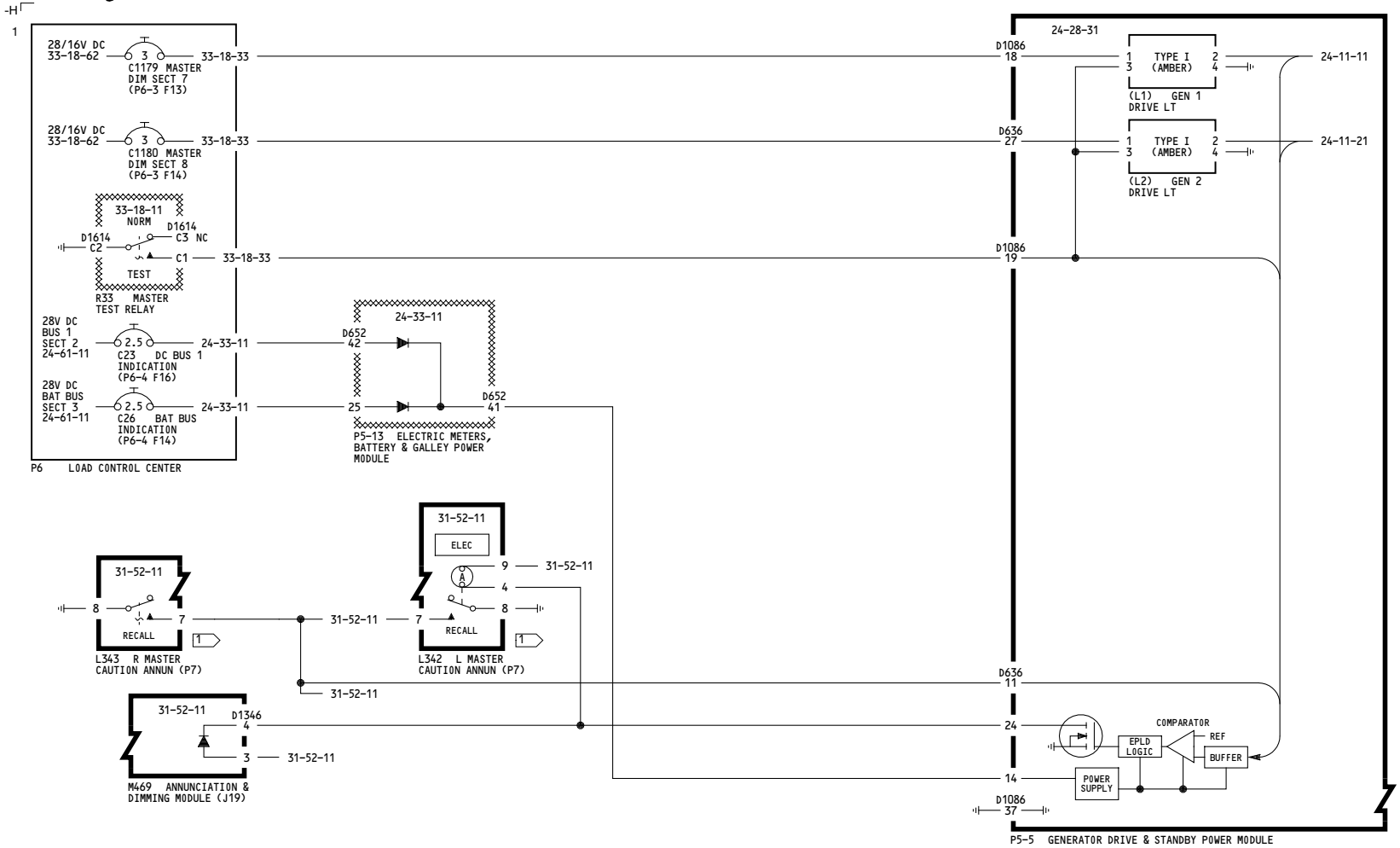

NOTES:

1 PRESSING THE LIGHT GROUNDS THE LOGIC THUS ILLUMINATING ALL ANNUNCIATORS. WHEN THE LIGHT IS RELEASED ANY UNCLEARED FAULT WILL KEEP ITS CORRESPONDING ANNUNCIATOR ILLUMINATED.

ALL	**MASTER CAUTION SYSTEM-ELECTRICAL CONTROL, GENERATOR** D280A451

WIRING DIAGRAMS
31-52-31

BOEING PROPRIETARY - Copyright © - Unpublished Work - See title page for details.

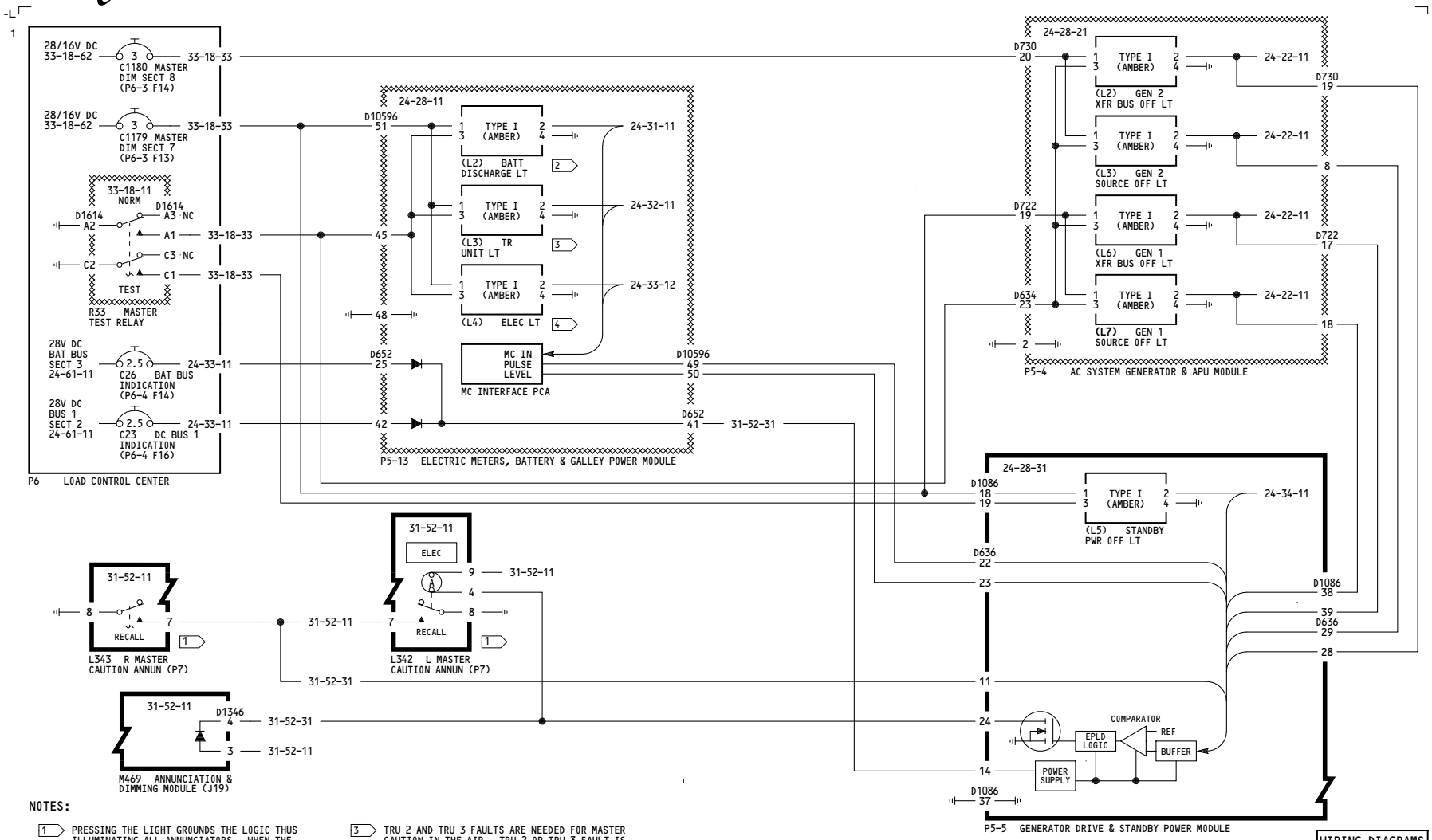

NOTES:

1. PRESSING THE LIGHT GROUNDS THE LOGIC THUS ILLUMINATING ALL ANNUNCIATORS. WHEN THE LIGHT IS RELEASED ANY UNCLEARED FAULT WILL KEEP ITS CORRESPONDING ANNUNCIATOR ILLUMINATED.
2. MASTER CAUTION IS INHIBITED DURING APU START.
3. TRU 2 AND TRU 3 FAULTS ARE NEEDED FOR MASTER CAUTION IN THE AIR. TRU 2 OR TRU 3 FAULT IS NEEDED FOR MASTER CAUTION ON THE GROUND.
4. MASTER CAUTION & ELEC ARE INHIBITED IN THE AIR.

WIRING DIAGRAMS
31-52-32

ALL

MASTER CAUTION SYSTEM-ELECTRICAL CONTROL, POWER BUS

D280A451

BOEING PROPRIETARY - Copyright © - Unpublished Work - See title page for details.

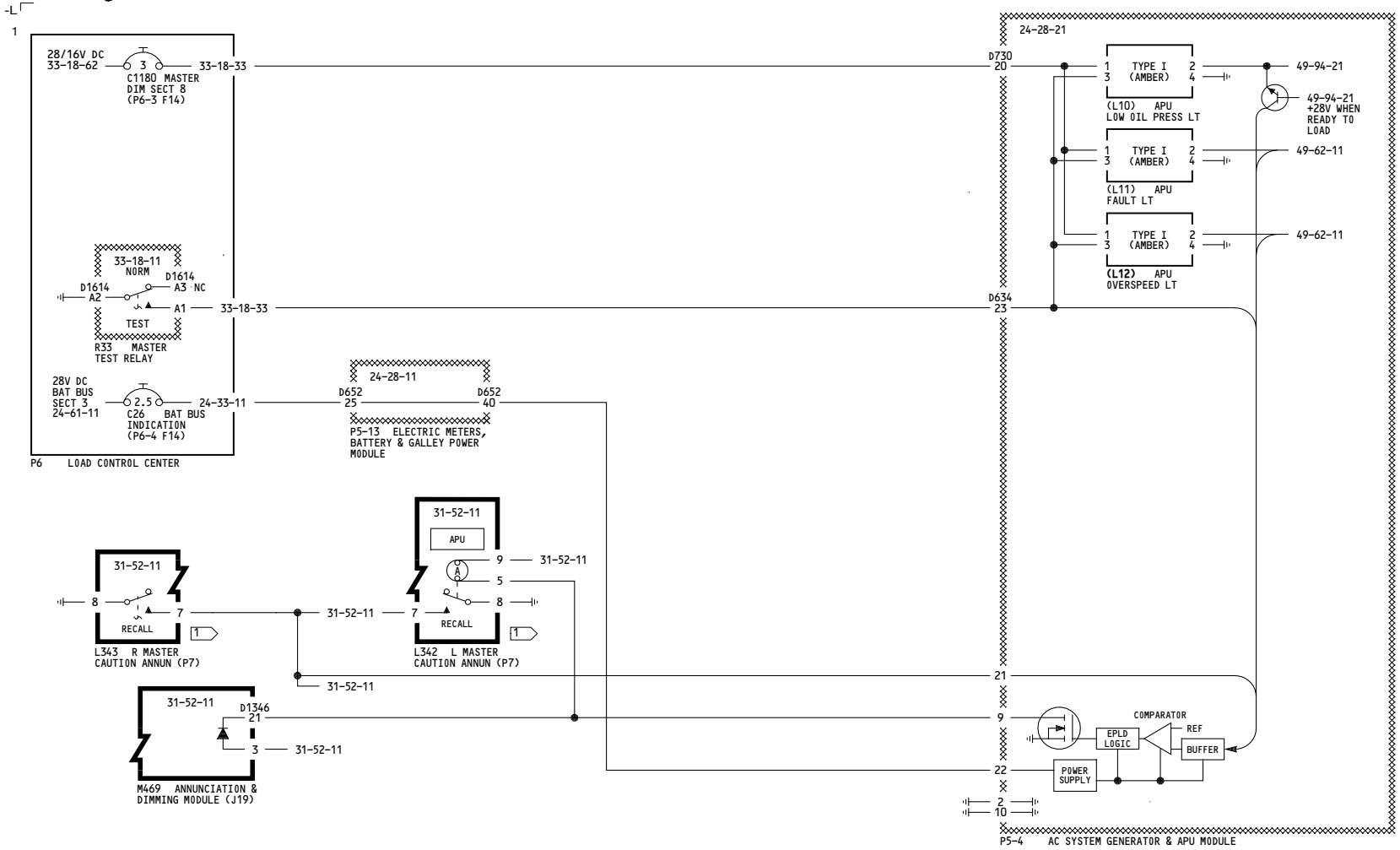

NOTES:

1 PRESSING THE LIGHT GROUNDS THE LOGIC THUS ILLUMINATING ALL ANNUNCIATORS. WHEN THE LIGHT IS RELEASED ANY UNCLEARED FAULT WILL KEEP ITS CORRESPONDING ANNUNCIATOR ILLUMINATED.

ALL	MASTER CAUTION SYSTEM- APU CONTROL D280A451

WIRING DIAGRAMS
31-52-35

BOEING PROPRIETARY - Copyright © - Unpublished Work - See title page for details.

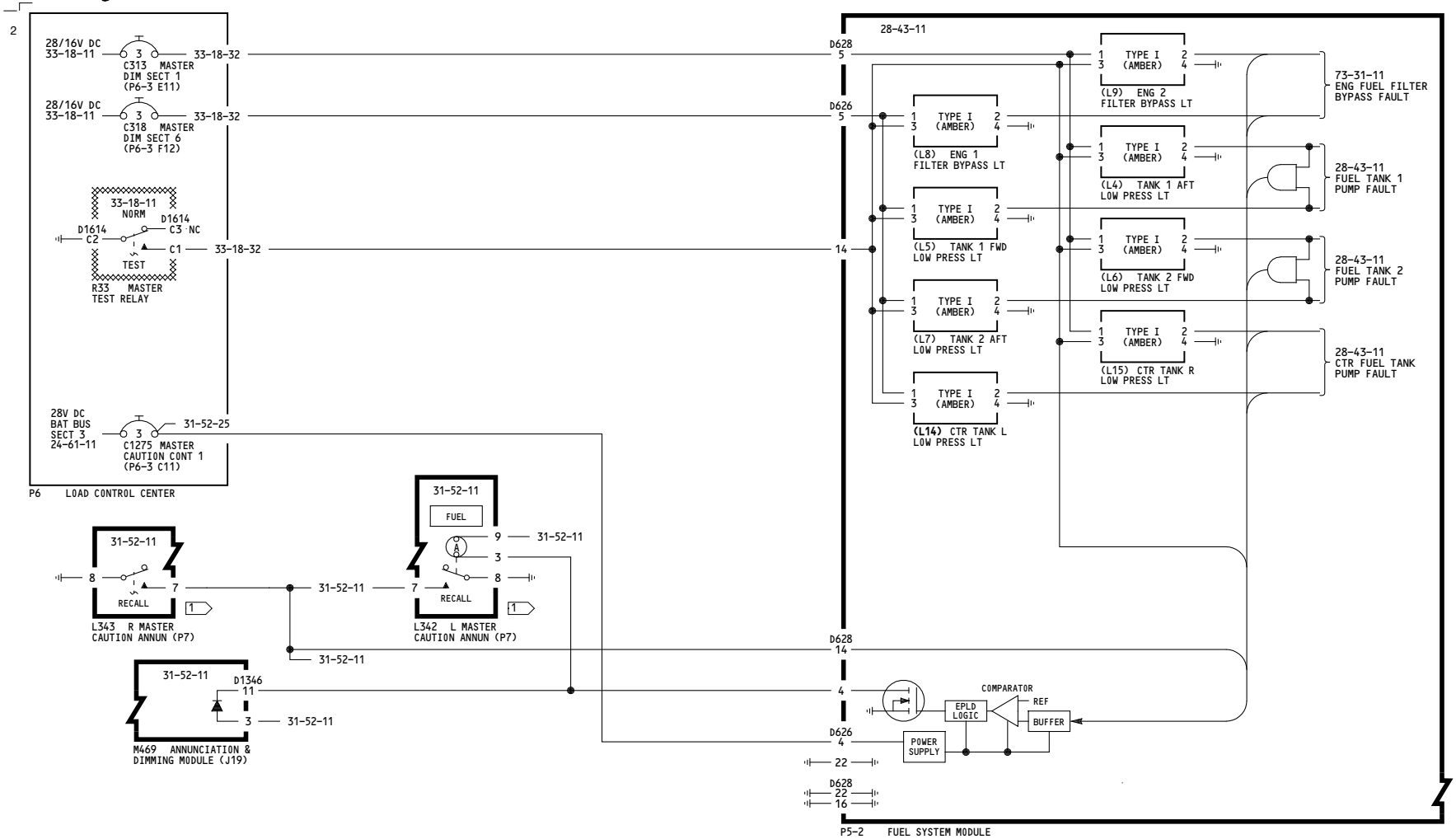

NOTES:

1 PRESSING THE LIGHT GROUNDS THE LOGIC THUS ILLUMINATING ALL ANNUNCIATORS. WHEN THE LIGHT IS RELEASED ANY UNCLEARED FAULT WILL KEEP ITS CORRESPONDING ANNUNCIATOR ILLUMINATED.

ALL	MASTER CAUTION SYSTEM-FUEL CONTROL
	D280A451

WIRING DIAGRAMS
31-52-41

BOEING PROPRIETARY - Copyright © - Unpublished Work - See title page for details.

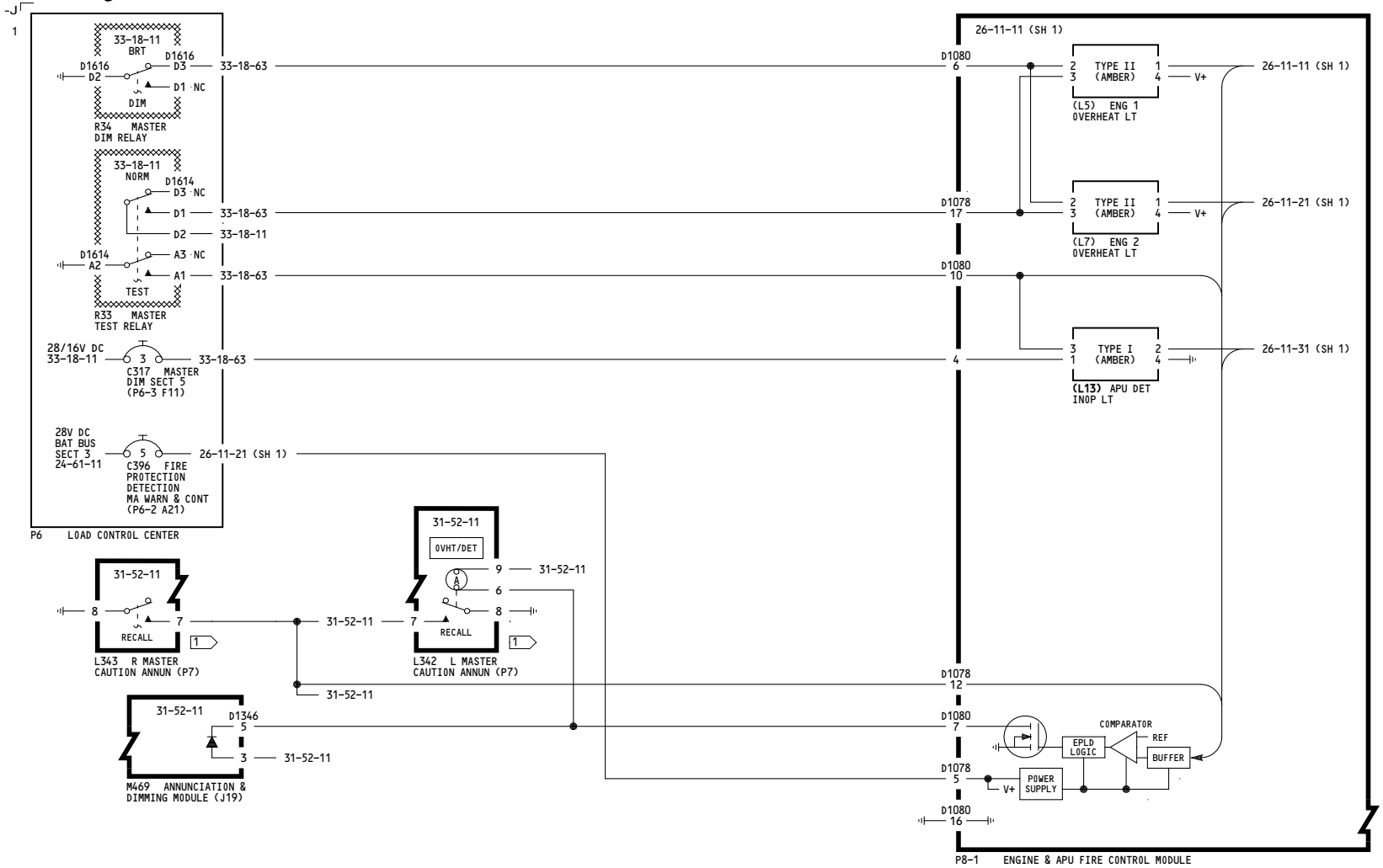

NOTES:

1 PRESSING THE LIGHT GROUNDS THE LOGIC THUS ILLUMINATING ALL ANNUNCIATORS. WHEN THE LIGHT IS RELEASED ANY UNCLEARED FAULT WILL KEEP ITS CORRESPONDING ANNUNCIATOR ILLUMINATED.

ALL	**MASTER CAUTION SYSTEM-OVERHEAT DETECTION** D280A451

WIRING DIAGRAMS
31-52-45

BOEING PROPRIETARY - Copyright © - Unpublished Work - See title page for details.

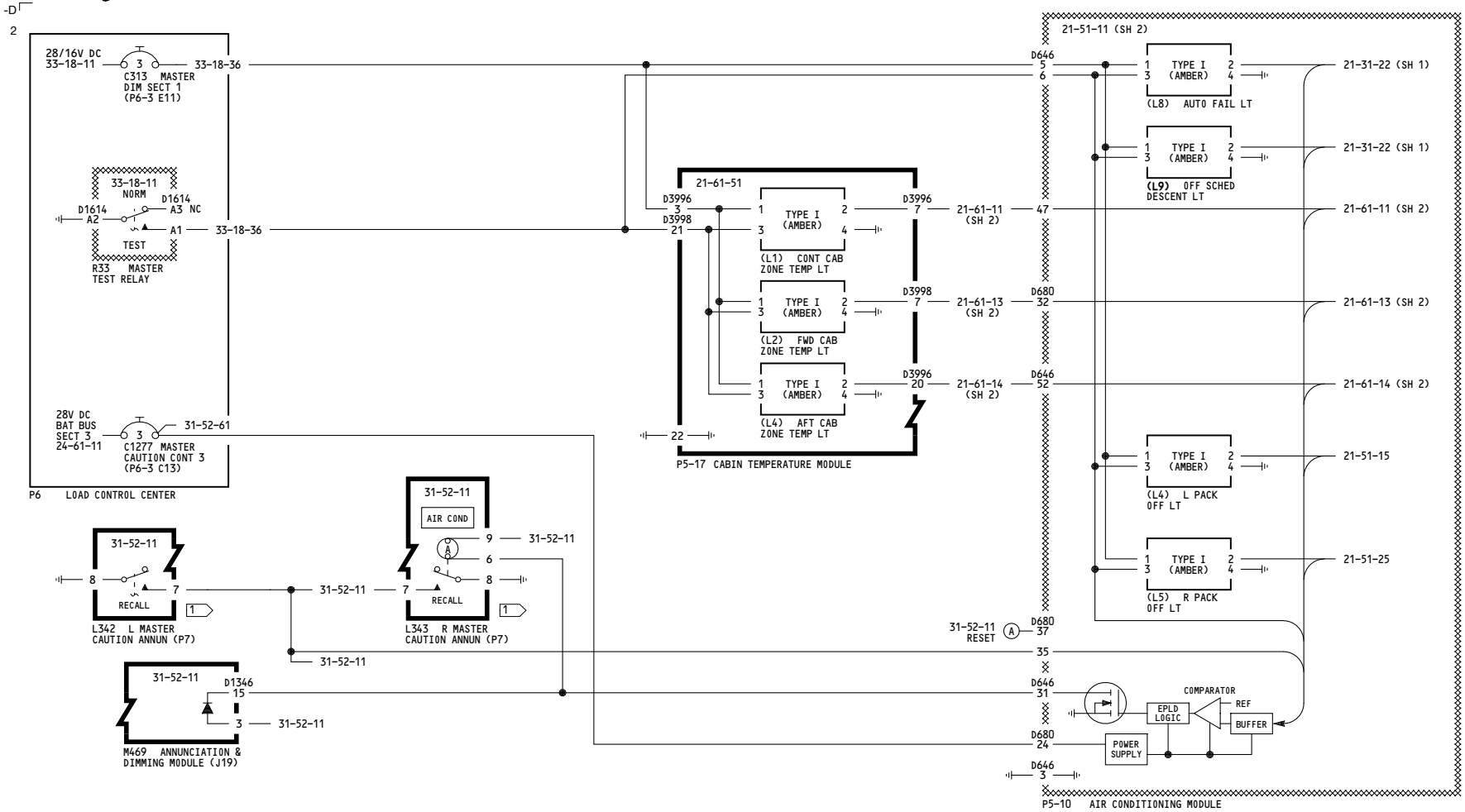

NOTES:

1 PRESSING THE LIGHT GROUNDS THE LOGIC THUS ILLUMINATING ALL ANNUNCIATORS. WHEN THE LIGHT IS RELEASED ANY UNCLEARED FAULT WILL KEEP ITS CORRESPONDING ANNUNCIATOR ILLUMINATED.

ALL	MASTER CAUTION SYSTEM-AIR CONDITIONING CONTROL, PACK & TEMP D280A451

WIRING DIAGRAMS
31-52-51

BOEING PROPRIETARY - Copyright © - Unpublished Work - See title page for details.

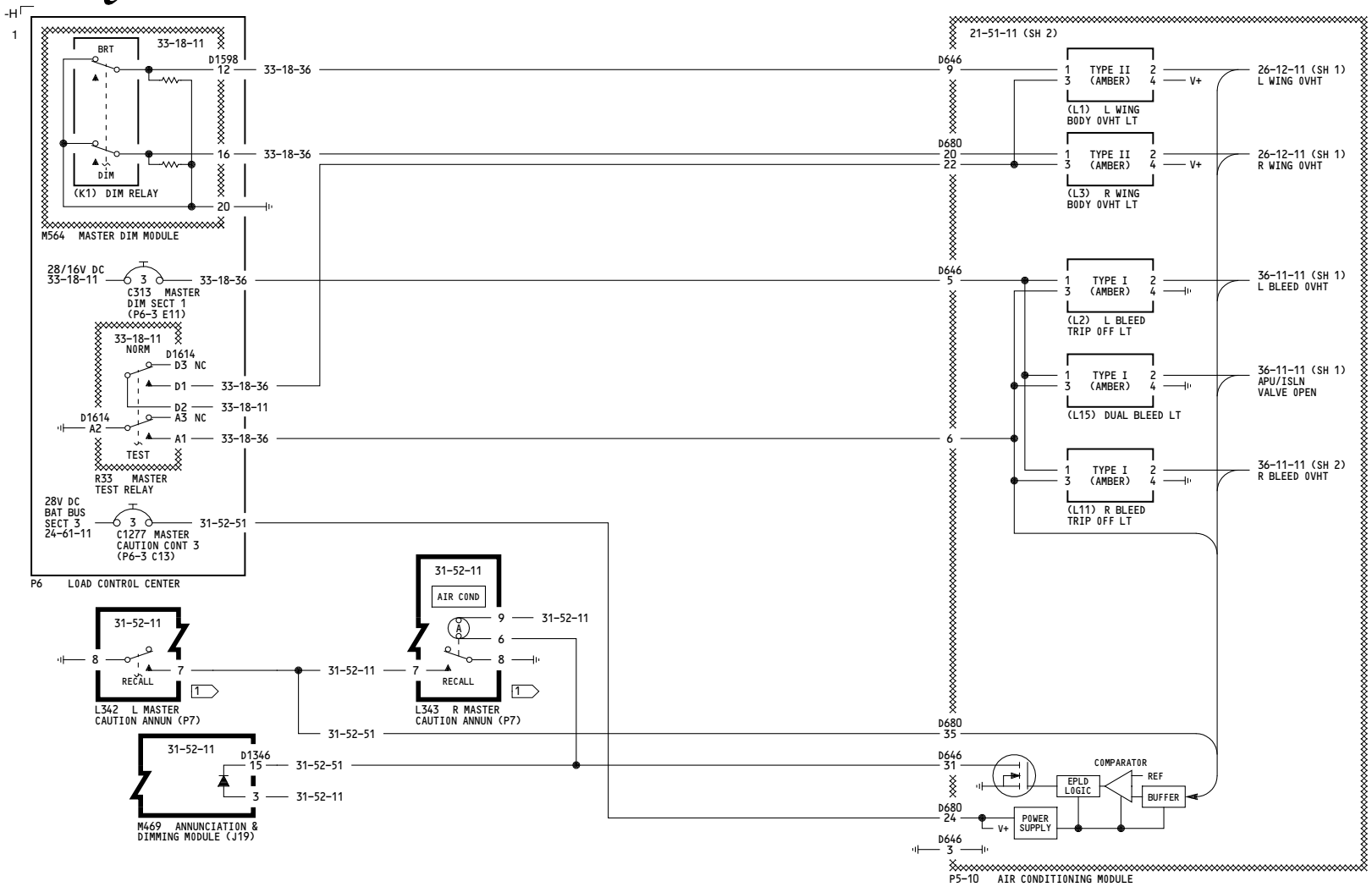

NOTES:

1 PRESSING THE LIGHT GROUNDS THE LOGIC THUS ILLUMINATING ALL ANNUNCIATORS. WHEN THE LIGHT IS RELEASED ANY UNCLEARED FAULT WILL KEEP ITS CORRESPONDING ANNUNCIATOR ILLUMINATED.

ALL	**MASTER CAUTION SYSTEM-AIR CONDITIONING CONTROL, BLEED AIR** D280A451

WIRING DIAGRAMS
31-52-52

BOEING PROPRIETARY - Copyright © - Unpublished Work - See title page for details.

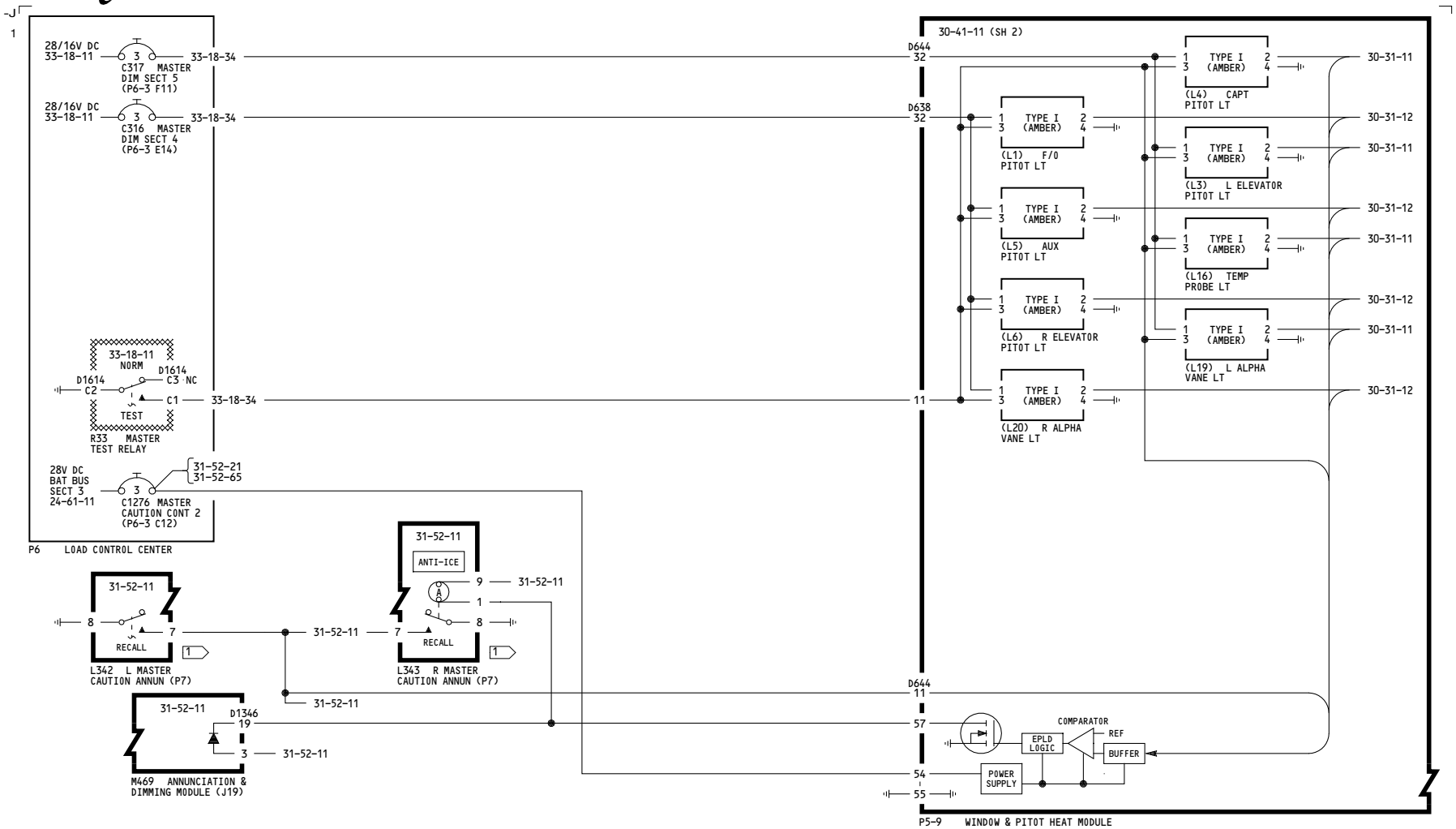

NOTES:

1. PRESSING THE LIGHT GROUNDS THE LOGIC THUS ILLUMINATING ALL ANNUNCIATORS. WHEN THE LIGHT IS RELEASED ANY UNCLEARED FAULT WILL KEEP ITS CORRESPONDING ANNUNCIATOR ILLUMINATED.

WIRING DIAGRAMS
31-52-55

ALL	MASTER CAUTION SYSTEM- ANTI-ICE CONTROL, PITOT HEAT
	D280A451

BOEING PROPRIETARY - Copyright © - Unpublished Work - See title page for details.

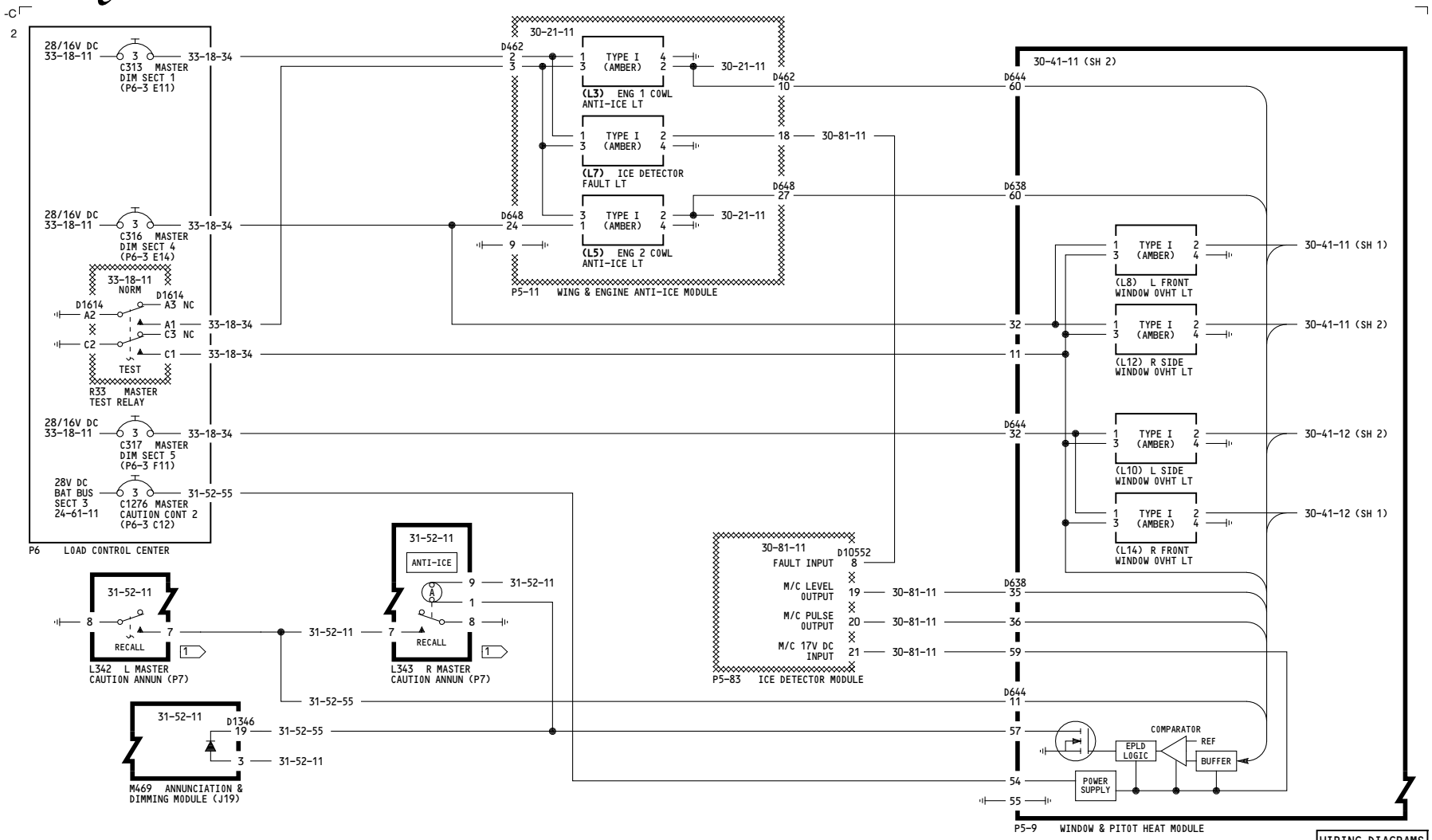

NOTES:

1 PRESSING THE LIGHT GROUNDS THE LOGIC THUS ILLUMINATING ALL ANNUNCIATORS. WHEN THE LIGHT IS RELEASED ANY UNCLEARED FAULT WILL KEEP ITS CORRESPONDING ANNUNCIATOR ILLUMINATED.

WIRING DIAGRAMS
31-52-56

ALL	MASTER CAUTION SYSTEM-ANTI-ICE CONTROL, WINDOW/COWL HEAT
	D280A451

BOEING PROPRIETARY - Copyright © - Unpublished Work - See title page for details.

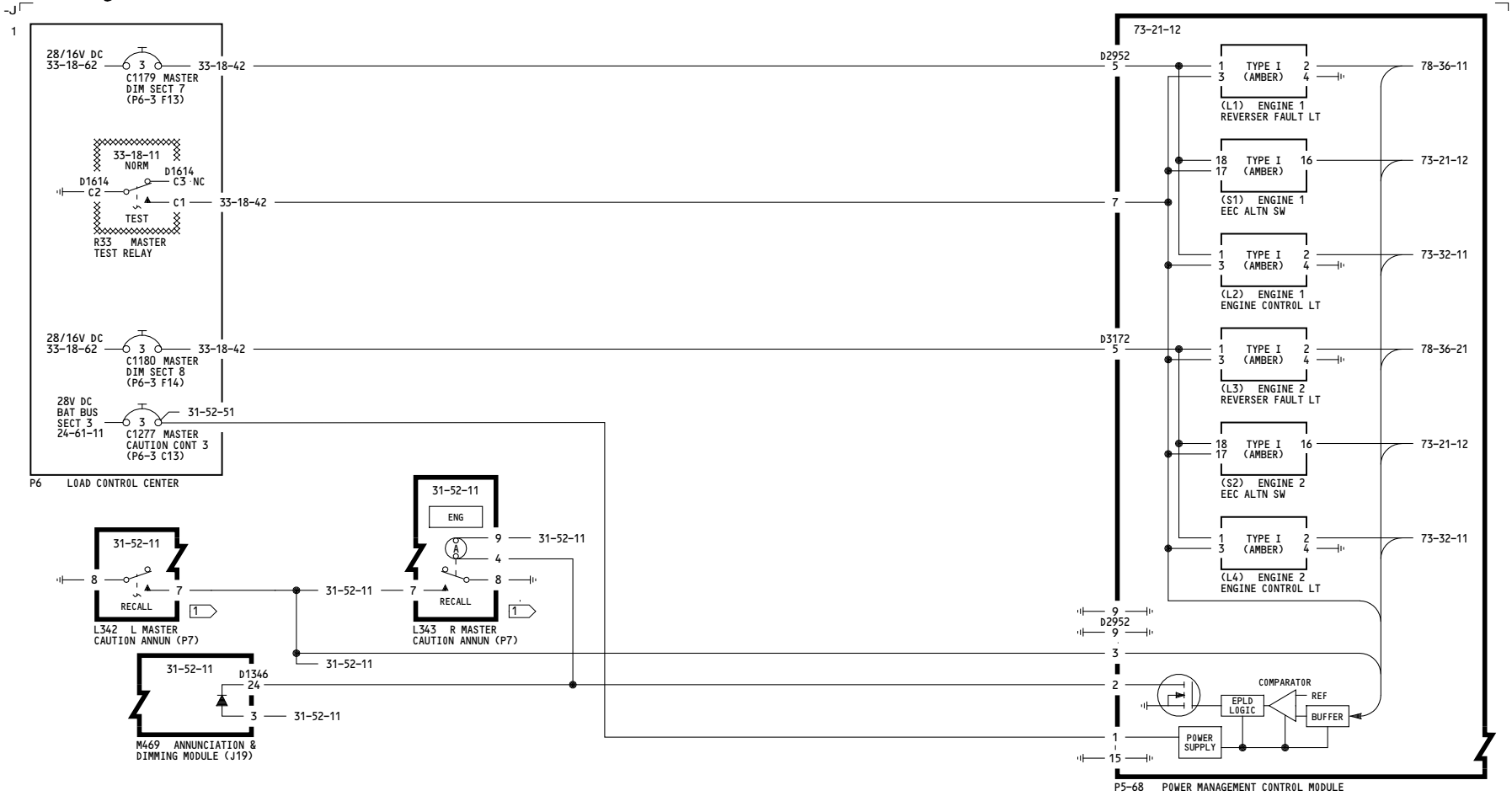

NOTES:

1 PRESSING THE LIGHT GROUNDS THE LOGIC THUS ILLUMINATING ALL ANNUNCIATORS. WHEN THE LIGHT IS RELEASED ANY UNCLEARED FAULT WILL KEEP ITS CORRESPONDING ANNUNCIATOR ILLUMINATED.

ALL	MASTER CAUTION SYSTEM-ENGINE CONTROL
	D280A451

WIRING DIAGRAMS
31-52-61

BOEING PROPRIETARY - Copyright © - Unpublished Work - See title page for details.

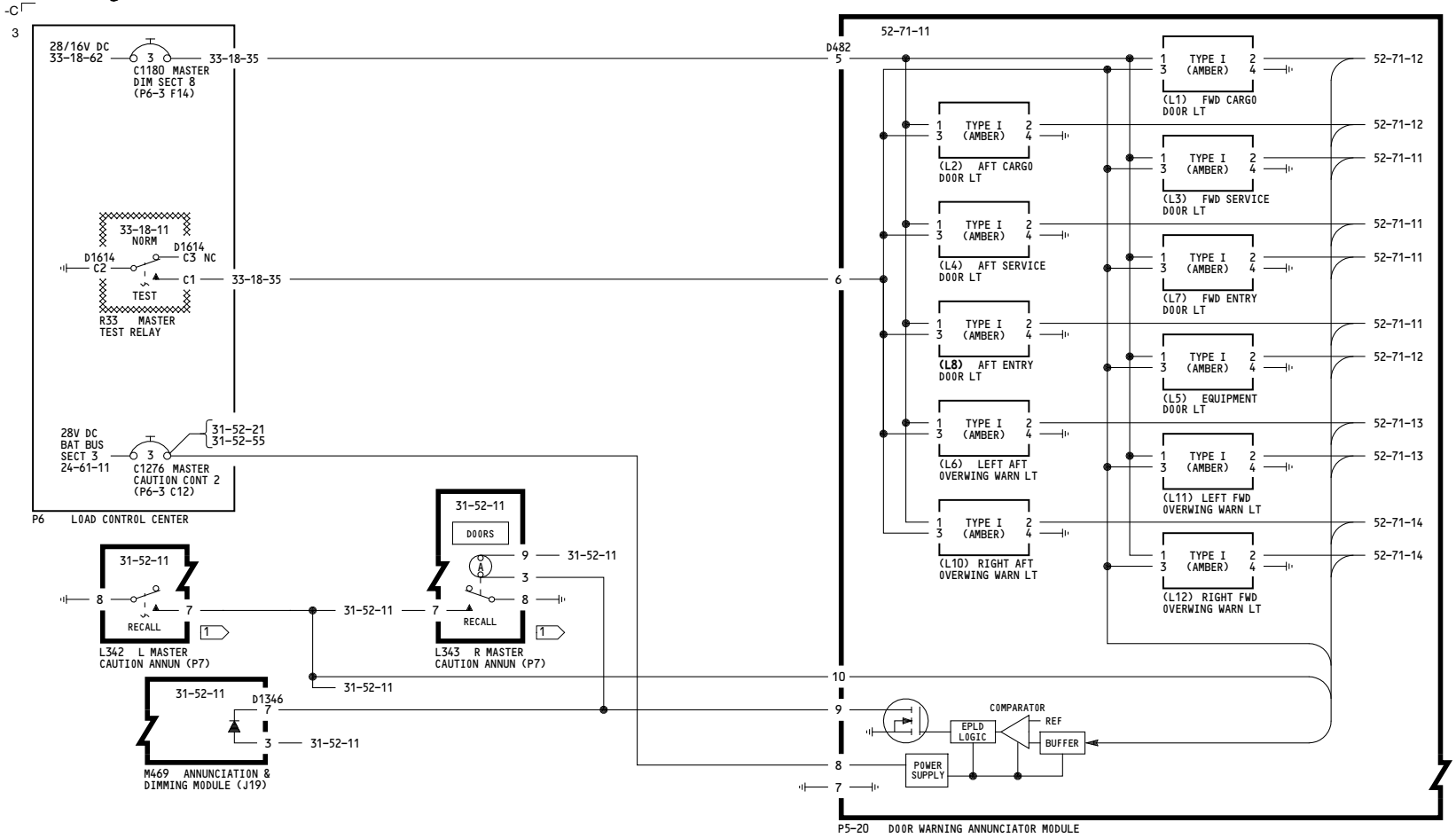

NOTES:

1 PRESSING THE LIGHT GROUNDS THE LOGIC THUS ILLUMINATING ALL ANNUNCIATORS. WHEN THE LIGHT IS RELEASED ANY UNCLEARED FAULT WILL KEEP ITS CORRESPONDING ANNUNCIATOR ILLUMINATED.

ALL	MASTER CAUTION SYSTEM-DOOR WARNING
	D280A451

WIRING DIAGRAMS
31-52-65

BOEING PROPRIETARY - Copyright © - Unpublished Work - See title page for details.

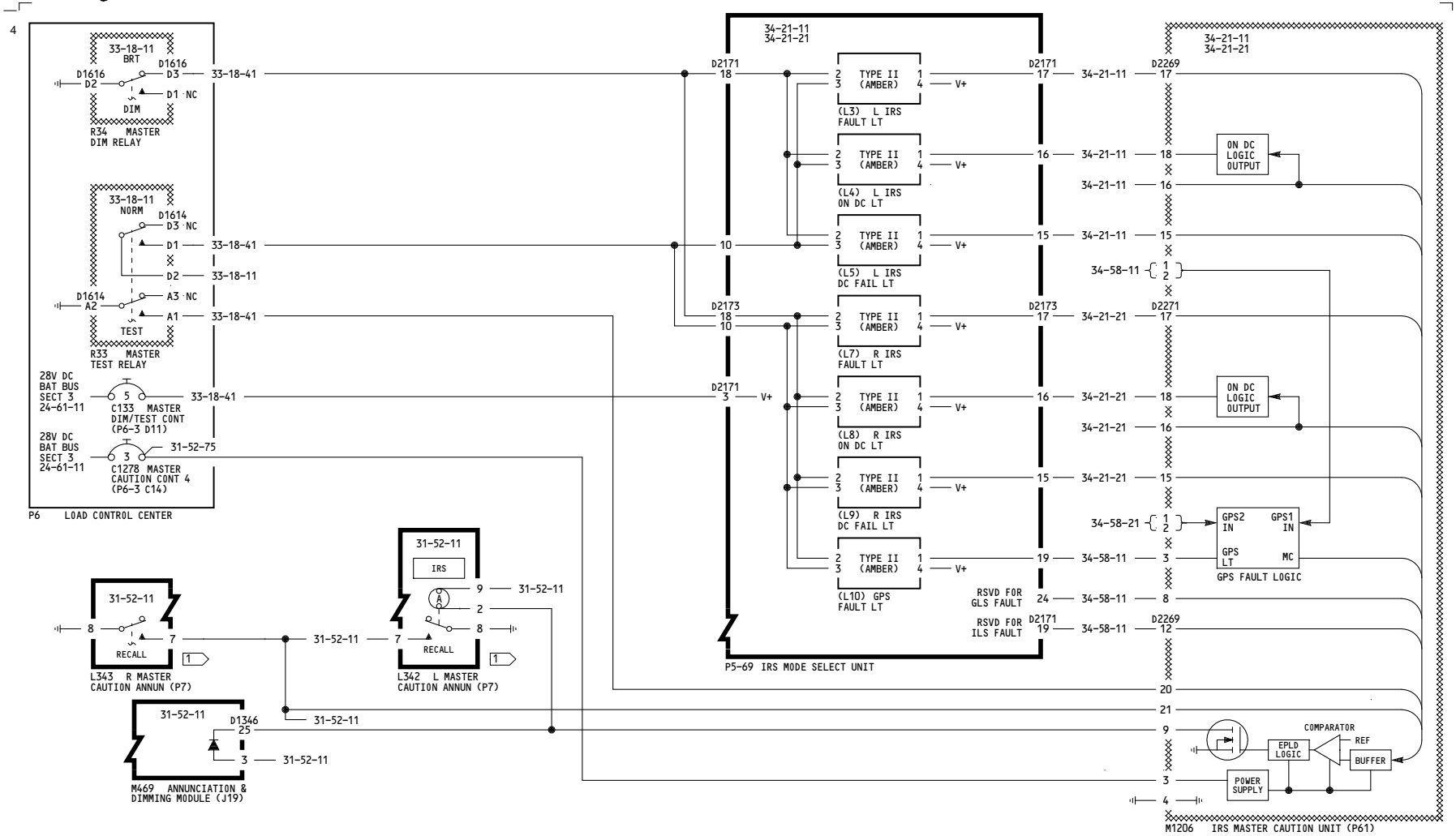

NOTES:

1. PRESSING THE LIGHT GROUNDS THE LOGIC THUS ILLUMINATING ALL ANNUNCIATORS. WHEN THE LIGHT IS RELEASED ANY UNCLEARED FAULT WILL KEEP ITS CORRESPONDING ANNUNCIATOR ILLUMINATED.

WIRING DIAGRAMS
31-52-71

YT101-YT119, YT126-YT129

MASTER CAUTION SYSTEM-IRS CONTROL

D280A451

BOEING PROPRIETARY - Copyright © - Unpublished Work - See title page for details.

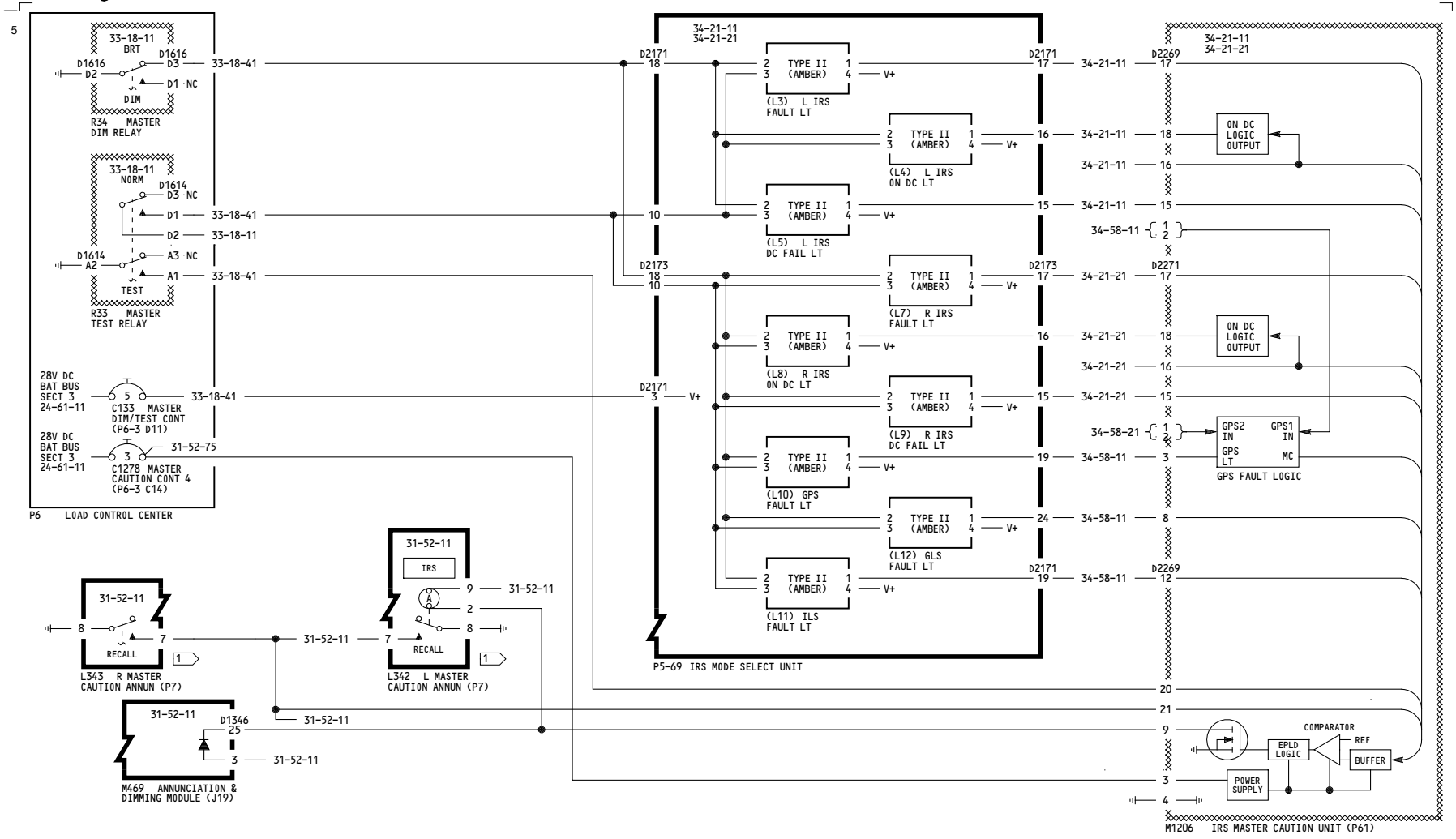

NOTES:

1 PRESSING THE LIGHT GROUNDS THE LOGIC THUS ILLUMINATING ALL ANNUNCIATORS. WHEN THE LIGHT IS RELEASED ANY UNCLEARED FAULT WILL KEEP ITS CORRESPONDING ANNUNCIATOR ILLUMINATED.

WIRING DIAGRAMS
31-52-71

YT120, YT130-YT133

MASTER CAUTION SYSTEM-IRS CONTROL

D280A451

BOEING PROPRIETARY - Copyright © - Unpublished Work - See title page for details.

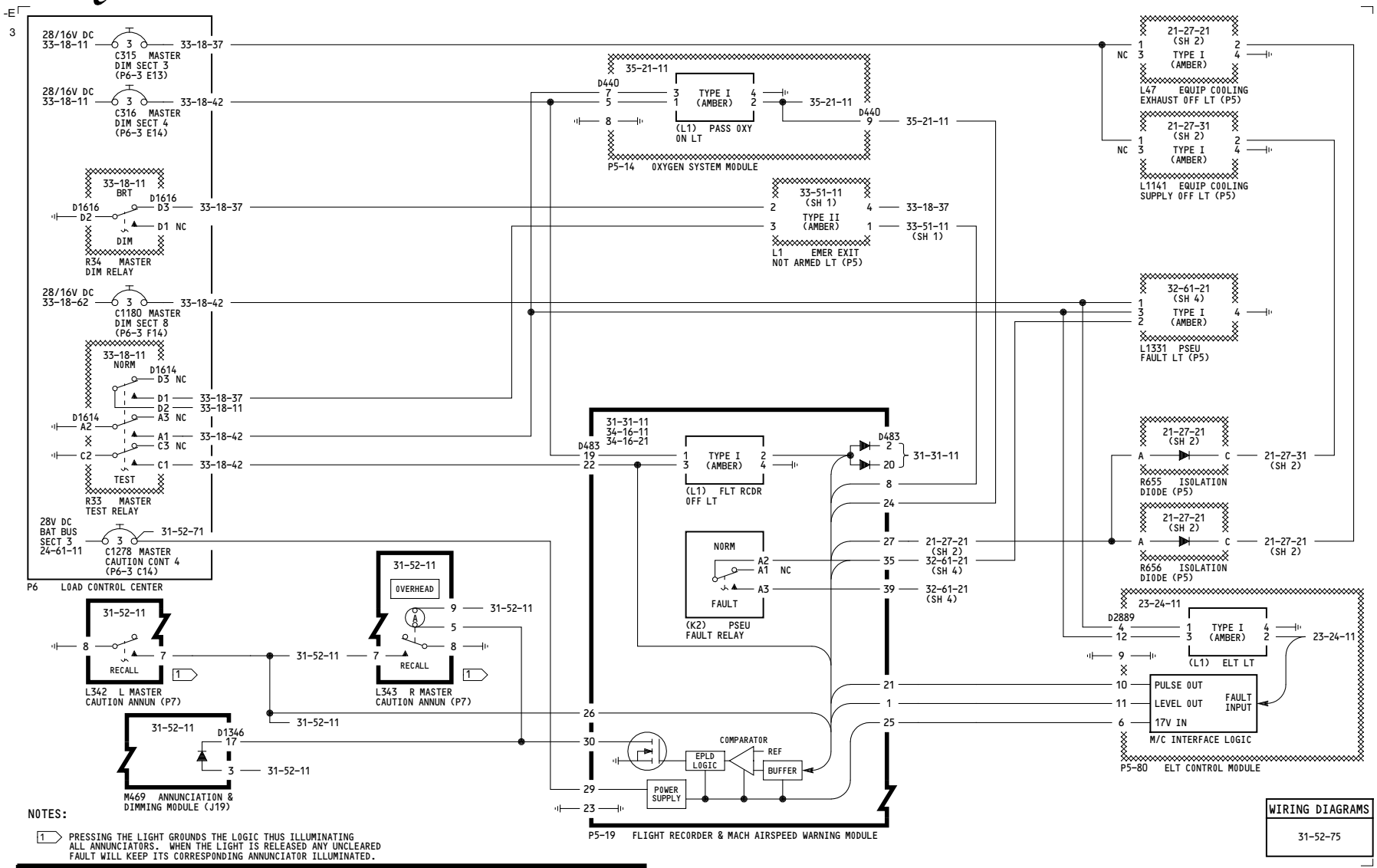

NOTES:

1 PRESSING THE LIGHT GROUNDS THE LOGIC THUS ILLUMINATING ALL ANNUNCIATORS. WHEN THE LIGHT IS RELEASED ANY UNCLEARED FAULT WILL KEEP ITS CORRESPONDING ANNUNCIATOR ILLUMINATED.

WIRING DIAGRAMS
31-52-75

ALL	MASTER CAUTION SYSTEM-OVERHEAD CONTROL
	D280A451

BOEING PROPRIETARY - Copyright © - Unpublished Work - See title page for details.

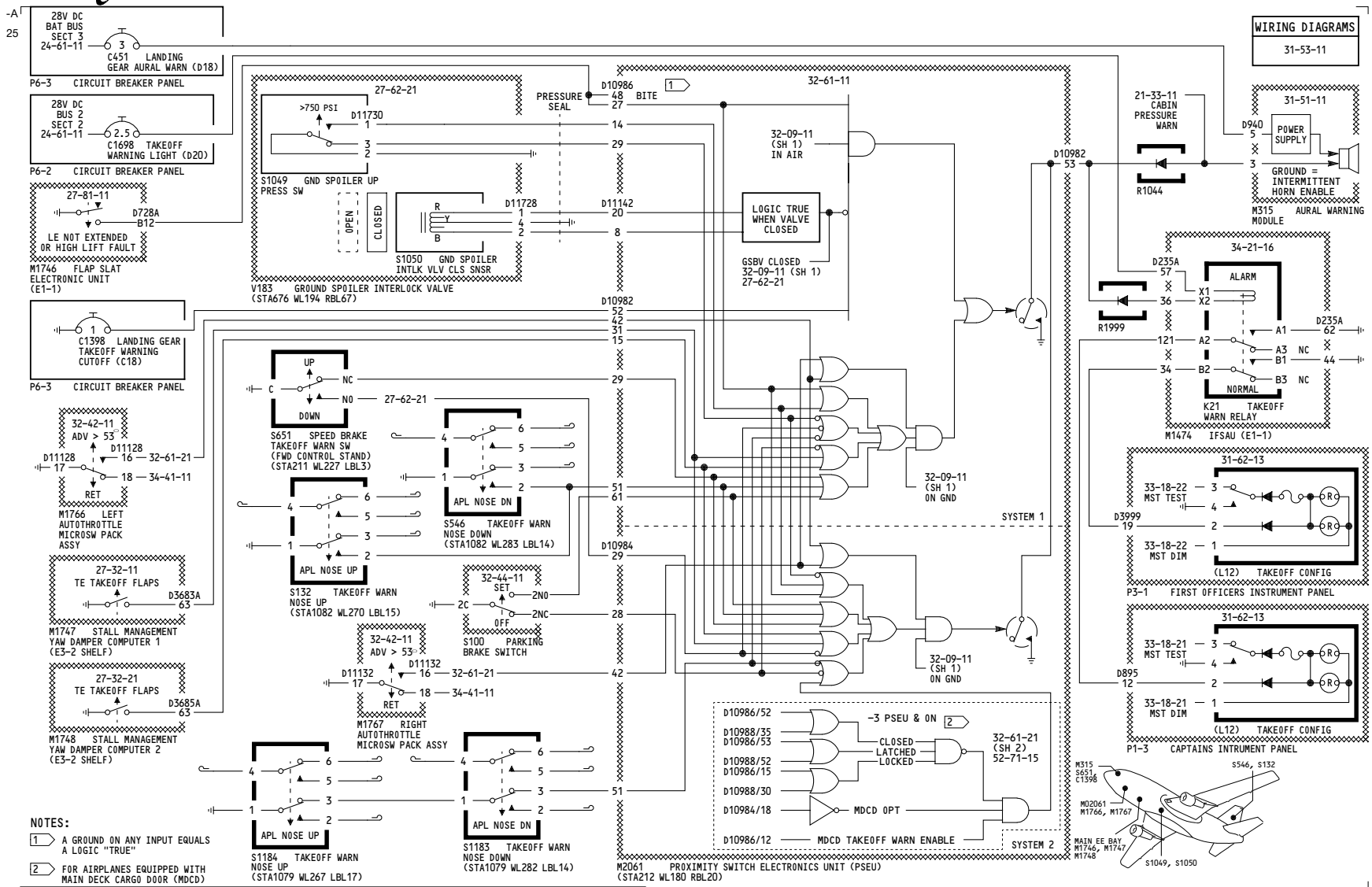

NOTES:

1. A GROUND ON ANY INPUT EQUALS A LOGIC "TRUE"
2. FOR AIRPLANES EQUIPPED WITH MAIN DECK CARGO DOOR (MDCD)

ALL

AURAL WARNING - TAKEOFF WARNING

D280A451

BOEING PROPRIETARY - Copyright © - Unpublished Work - See title page for details.

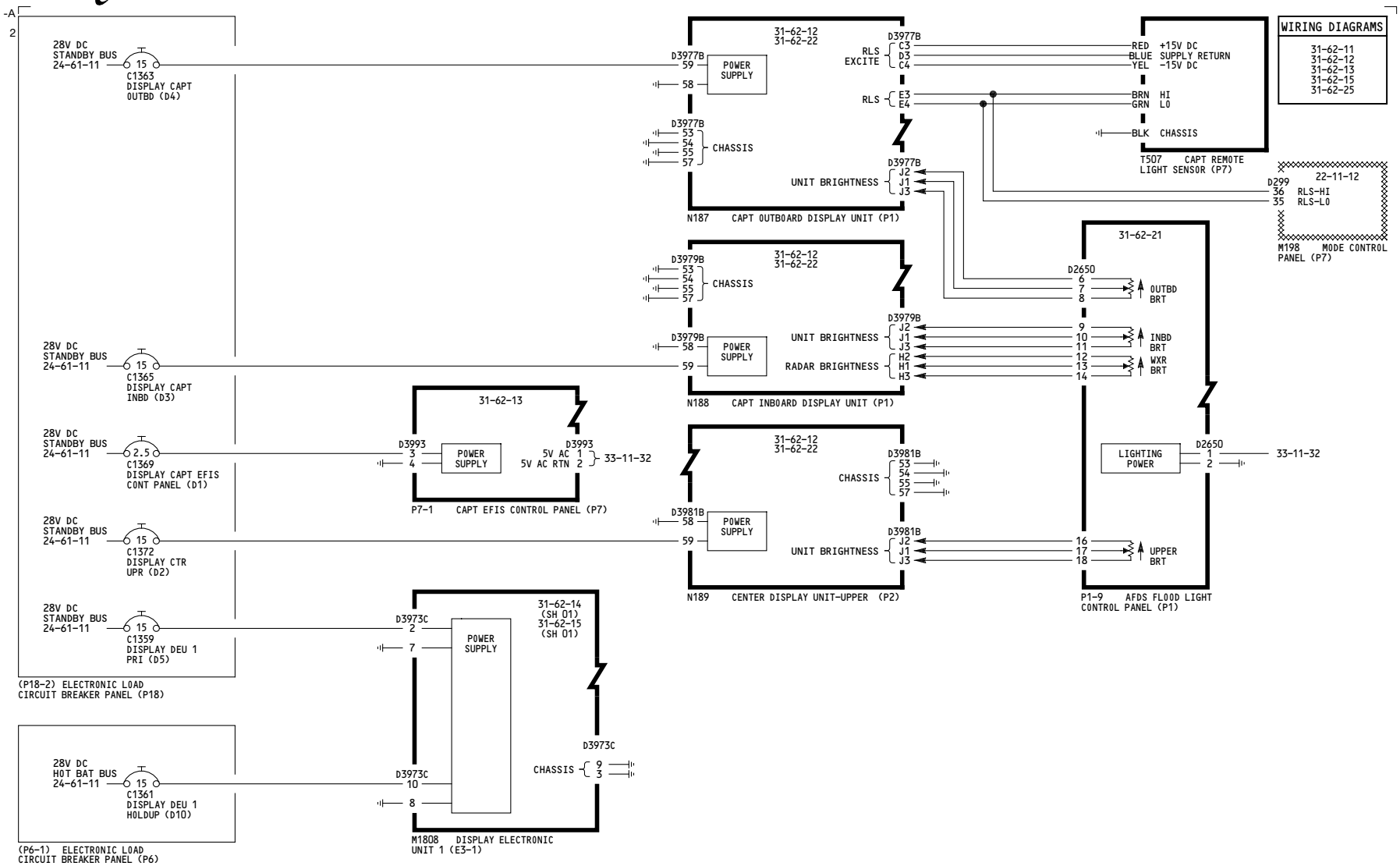

ALL	**CDS - POWER DISTRIBUTION AND INSTRUMENT LIGHTING CAPTAINS** D280A451

WIRING DIAGRAMS
31-62-11 31-62-12 31-62-13 31-62-15 31-62-25

BOEING PROPRIETARY - Copyright © - Unpublished Work - See title page for details.

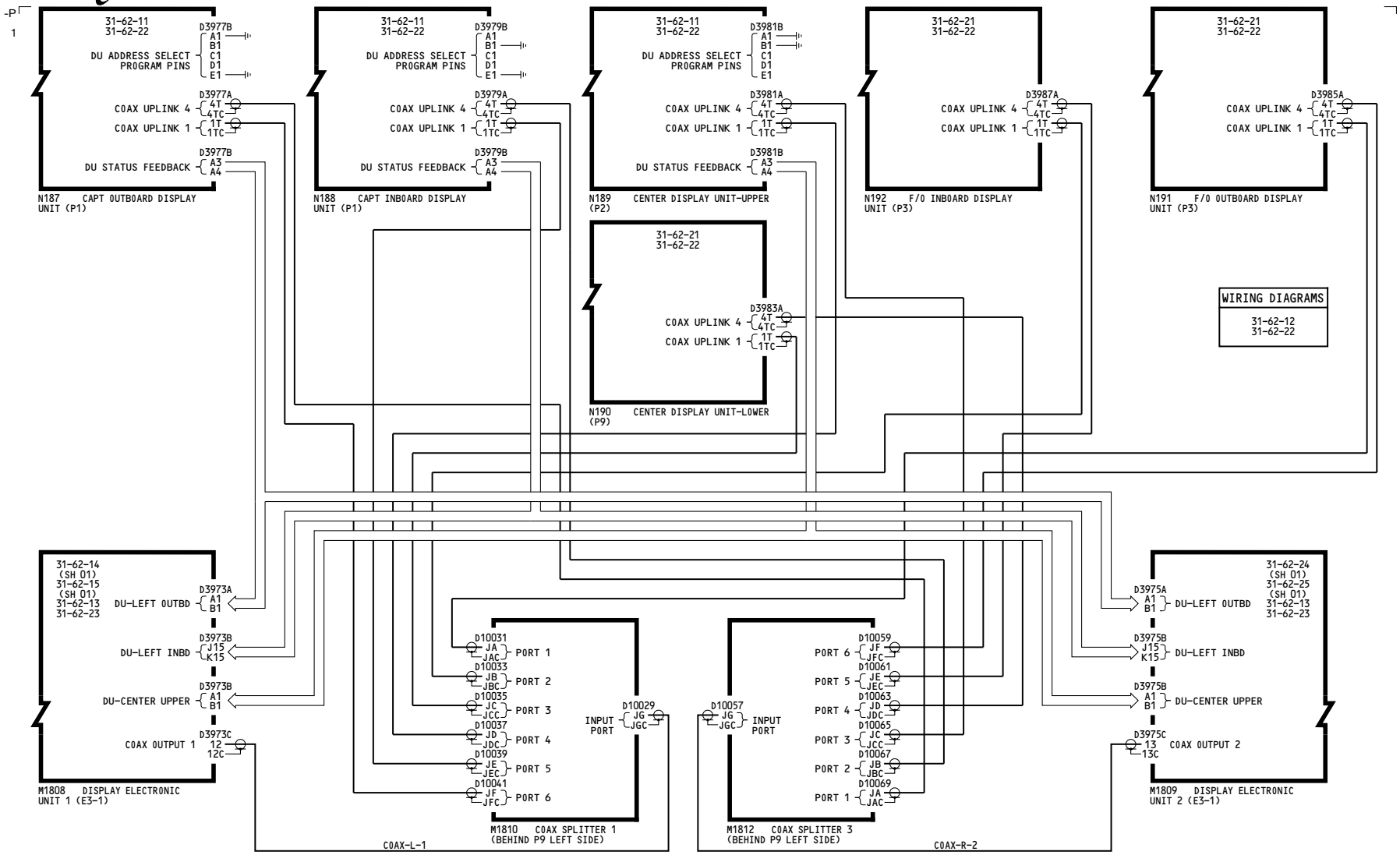

ALL	**CDS - VIDEO COAX SPLITTERS 1 AND 3 DU STATUS** D280A451

BOEING PROPRIETARY - Copyright © - Unpublished Work - See title page for details.

-A
3

WIRING DIAGRAMS
31-62-13

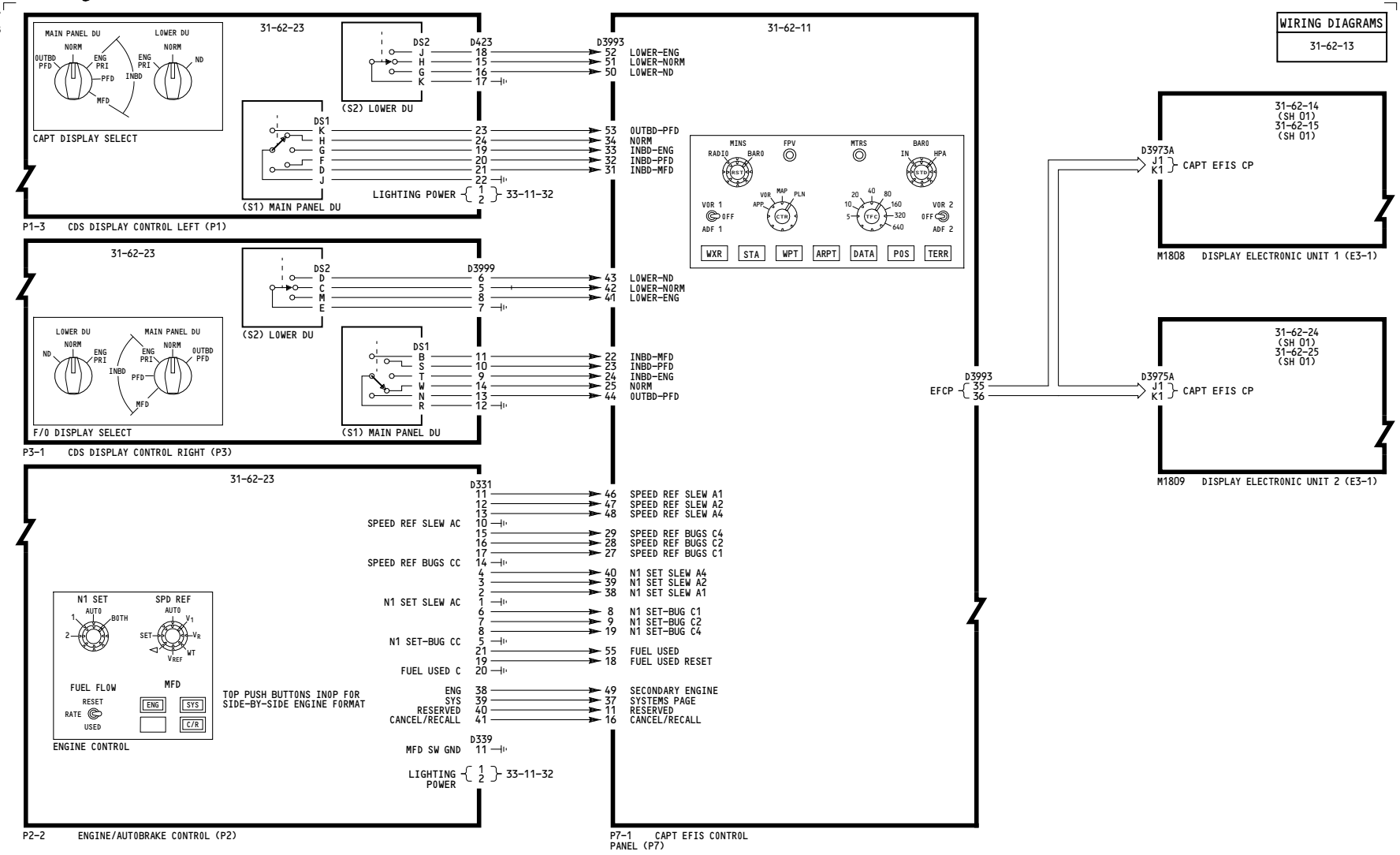

ALL

CDS - CONTROL PANEL INTERFACES - CAPTAINS

D280A451

BOEING PROPRIETARY - Copyright © - Unpublished Work - See title page for details.

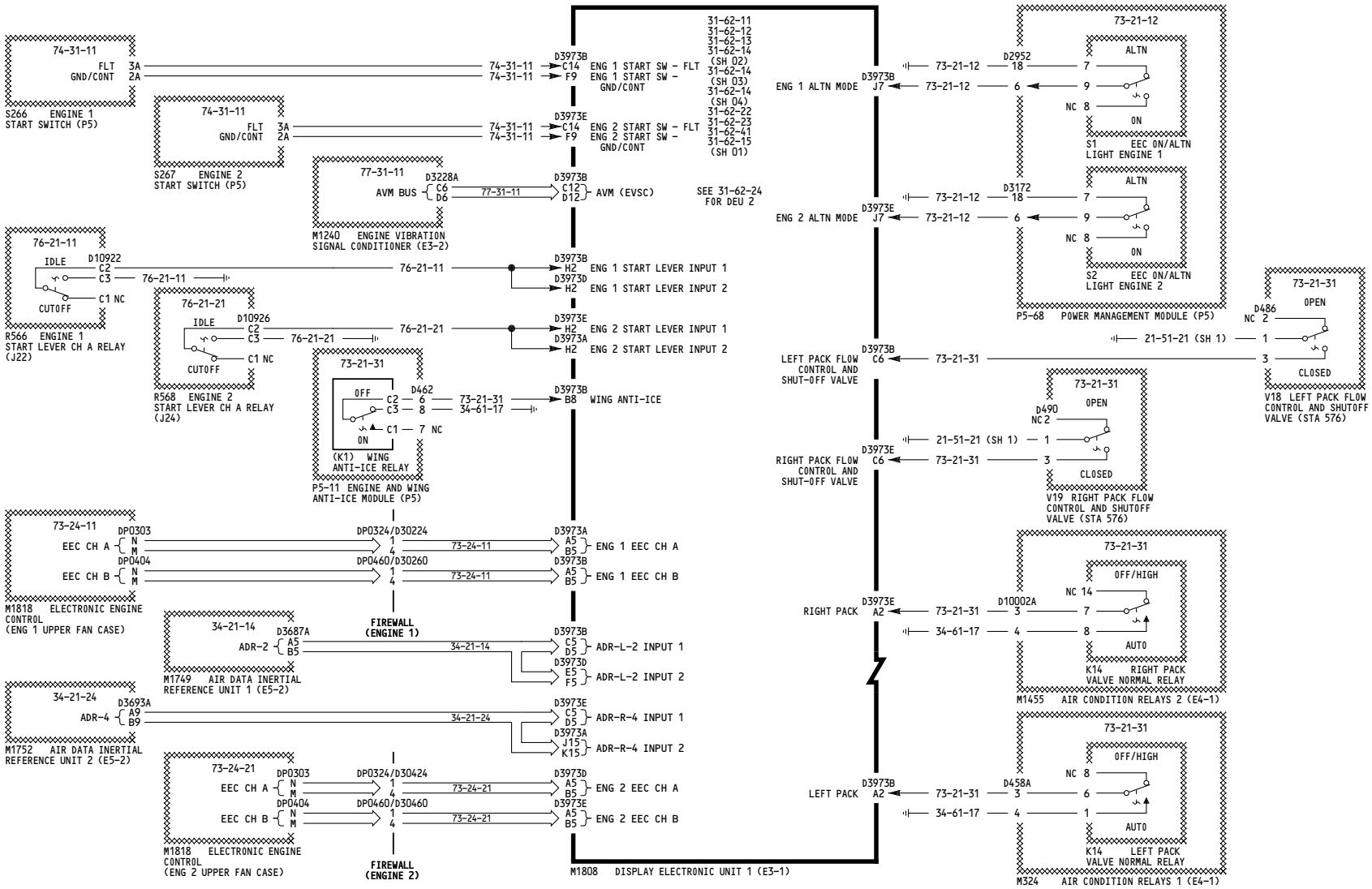

YT101-YT109, YT126-YT129

CDS - DEU 1 ENGINE HYDRAULIC, APU AND FUEL INTERFACES

D280A451

BOEING PROPRIETARY - Copyright © - Unpublished Work - See title page for details.

-M
1

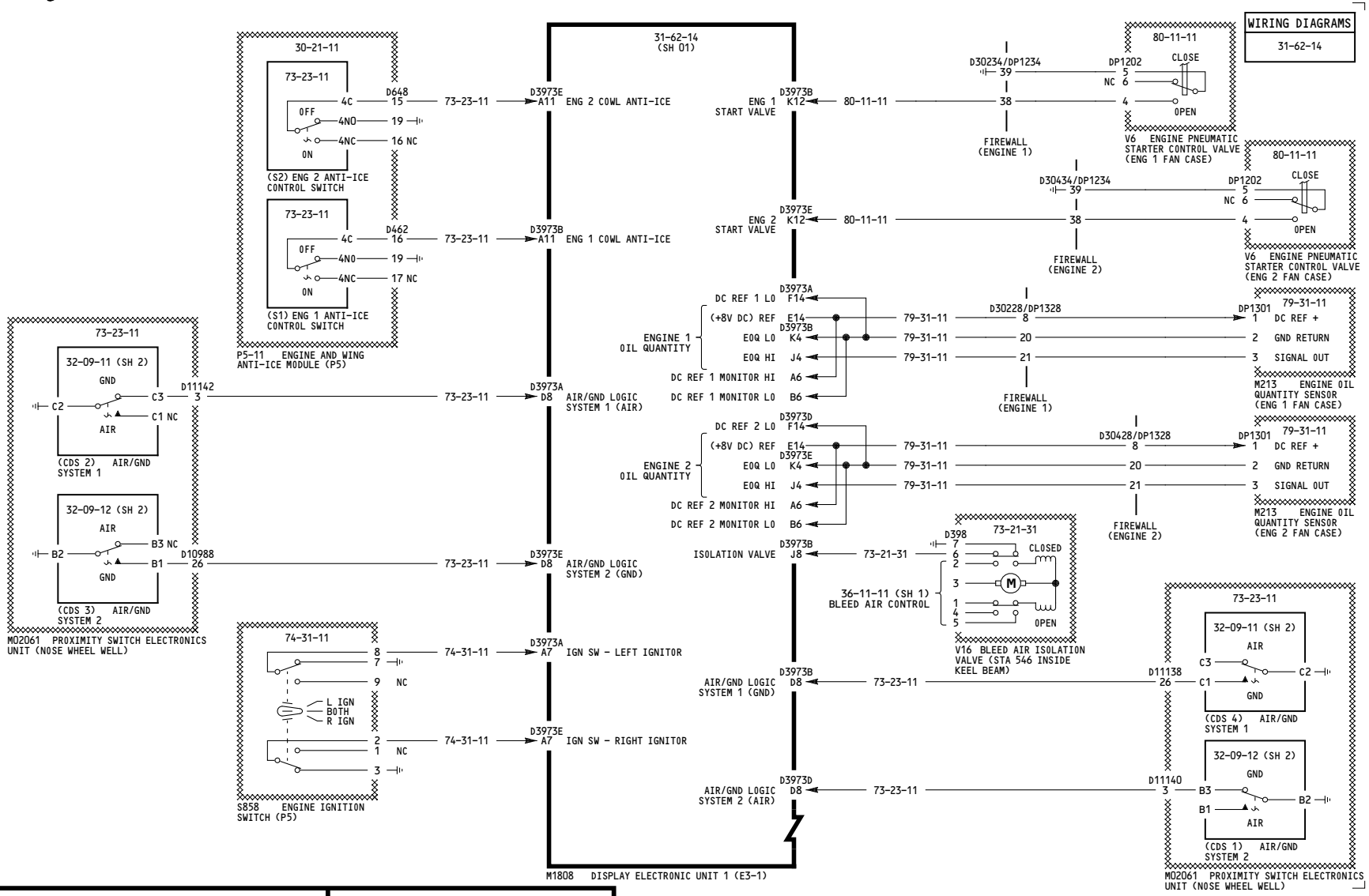

YT101-YT109, YT126-YT129

CDS - DEU 1 ENGINE HYDRAULIC, APU AND FUEL INTERFACES

D280A451

BOEING PROPRIETARY - Copyright © - Unpublished Work - See title page for details.

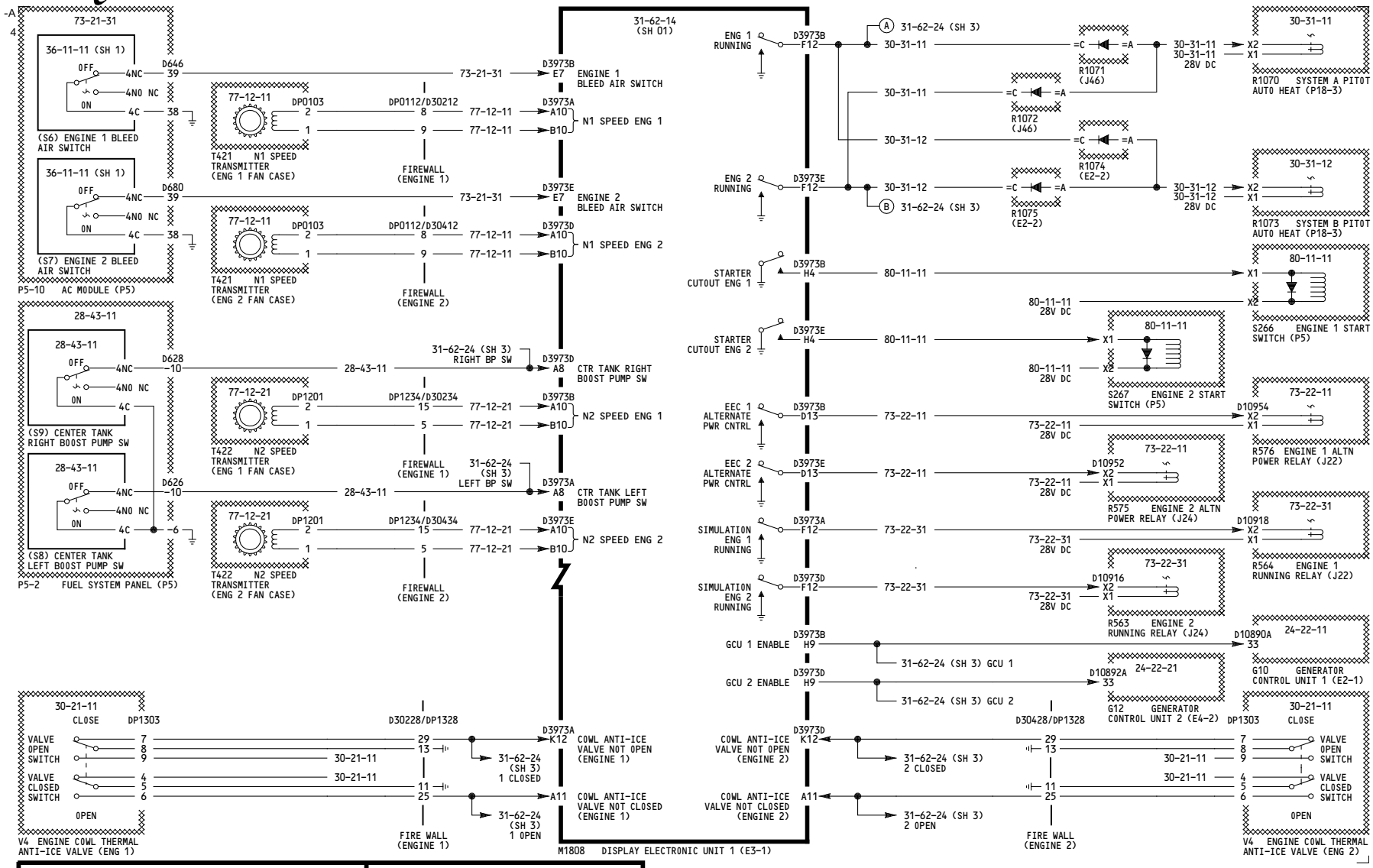

YT101-YT109, YT126-YT129

CDS - DEU 1 ENGINE HYDRAULIC, APU AND FUEL INTERFACES

D280A451

BOEING PROPRIETARY - Copyright © - Unpublished Work - See title page for details.

3

WIRING DIAGRAMS
31-62-14

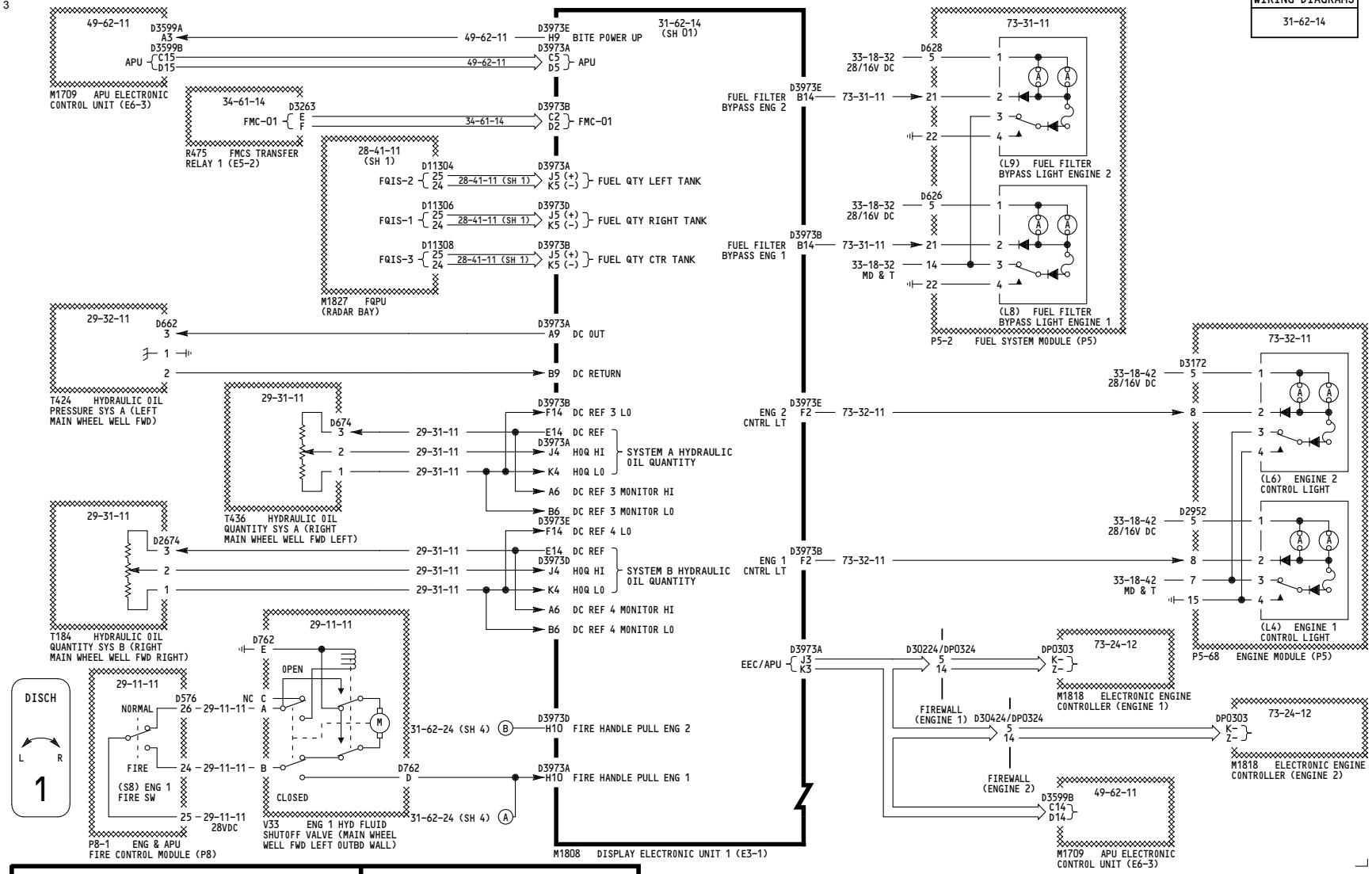

YT101-YT109, YT126-YT129

CDS - DEU 1 ENGINE HYDRAULIC, APU AND FUEL INTERFACES

D280A451

BOEING PROPRIETARY - Copyright © - Unpublished Work - See title page for details.

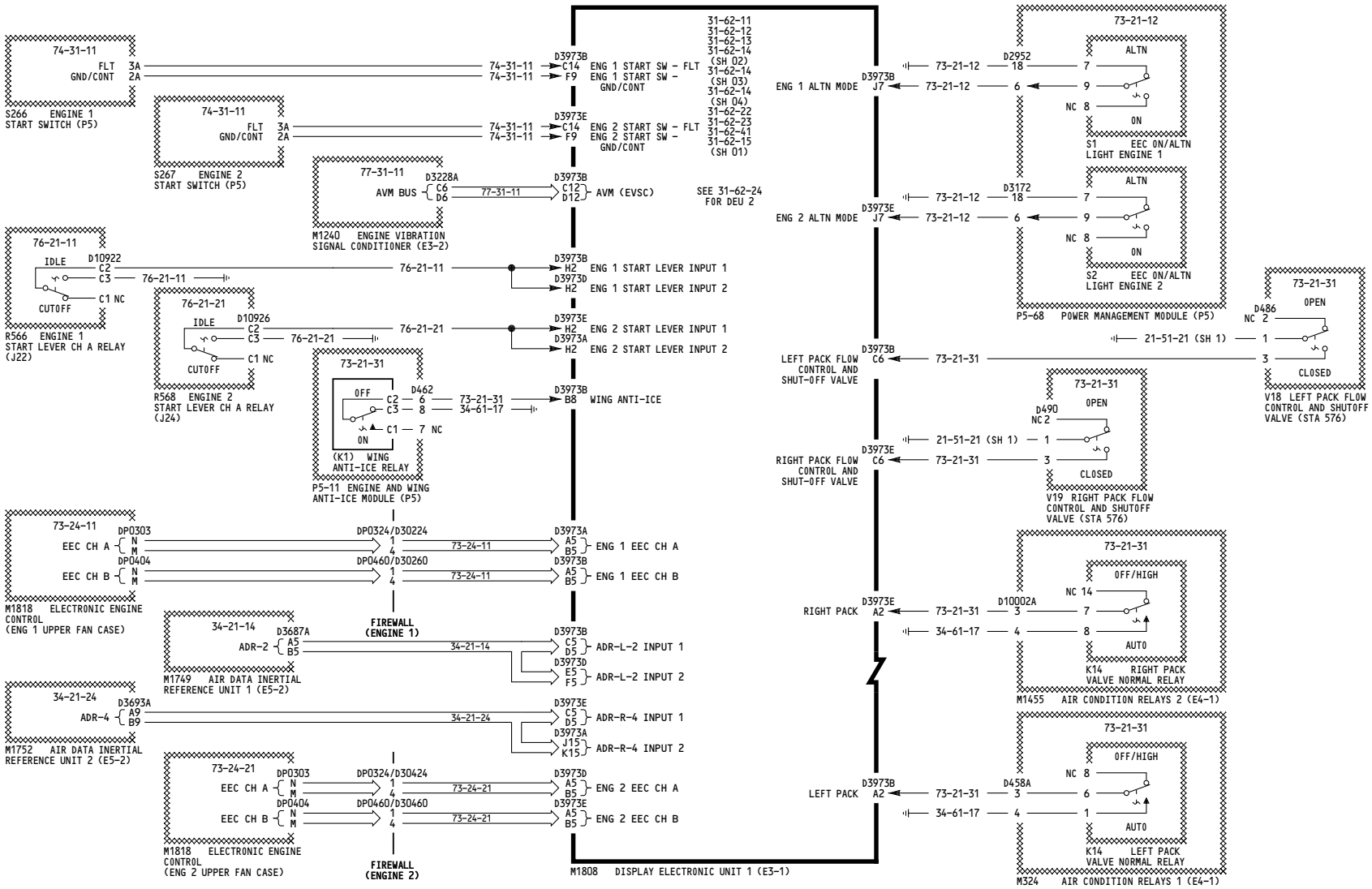

YT110-YT115, YT130-YT131

CDS - DEU 1 ENGINE HYDRAULIC, APU AND FUEL INTERFACES

D280A451

BOEING PROPRIETARY - Copyright © - Unpublished Work - See title page for details.

-M
1

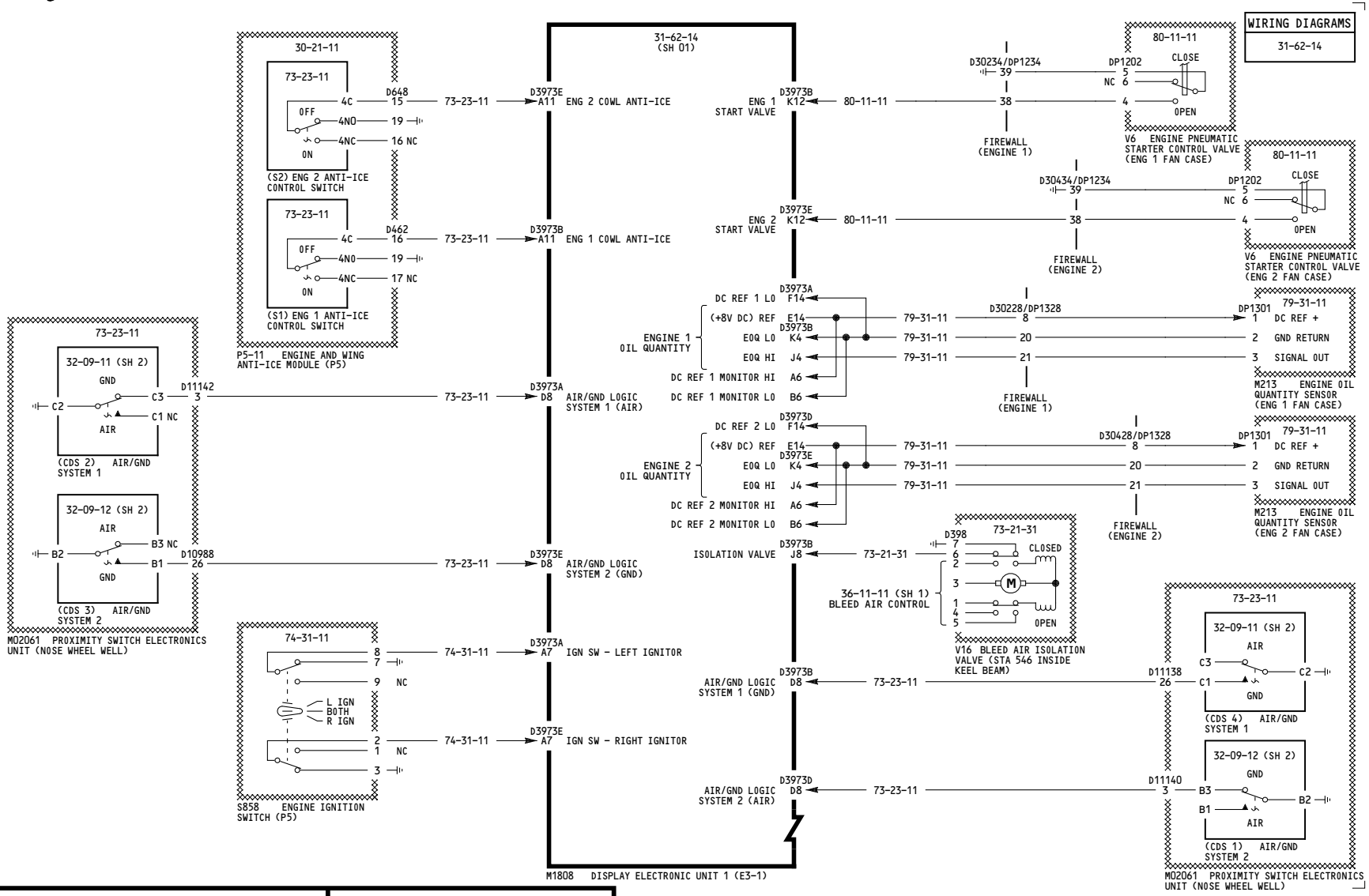

YT110-YT115, YT130-YT131

CDS - DEU 1 ENGINE HYDRAULIC, APU AND FUEL INTERFACES

D280A451

31-62-14

Page 102
Sheet 2
Aug 31/2015

BOEING PROPRIETARY - Copyright © - Unpublished Work - See title page for details.

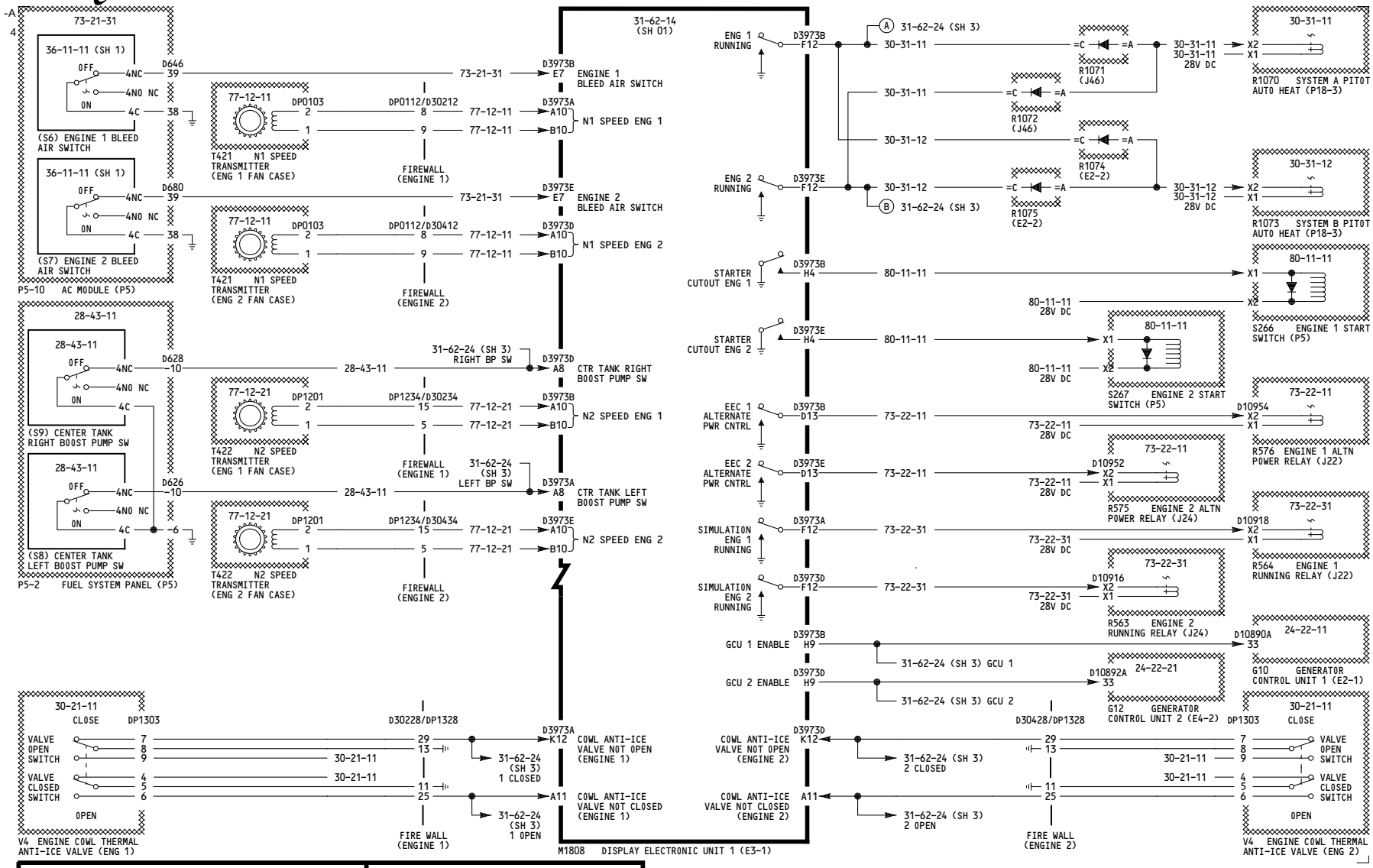

YT110-YT115, YT130-YT131

CDS - DEU 1 ENGINE HYDRAULIC, APU AND FUEL INTERFACES

D280A451

BOEING PROPRIETARY - Copyright © - Unpublished Work - See title page for details.

6

WIRING DIAGRAMS
31-62-14

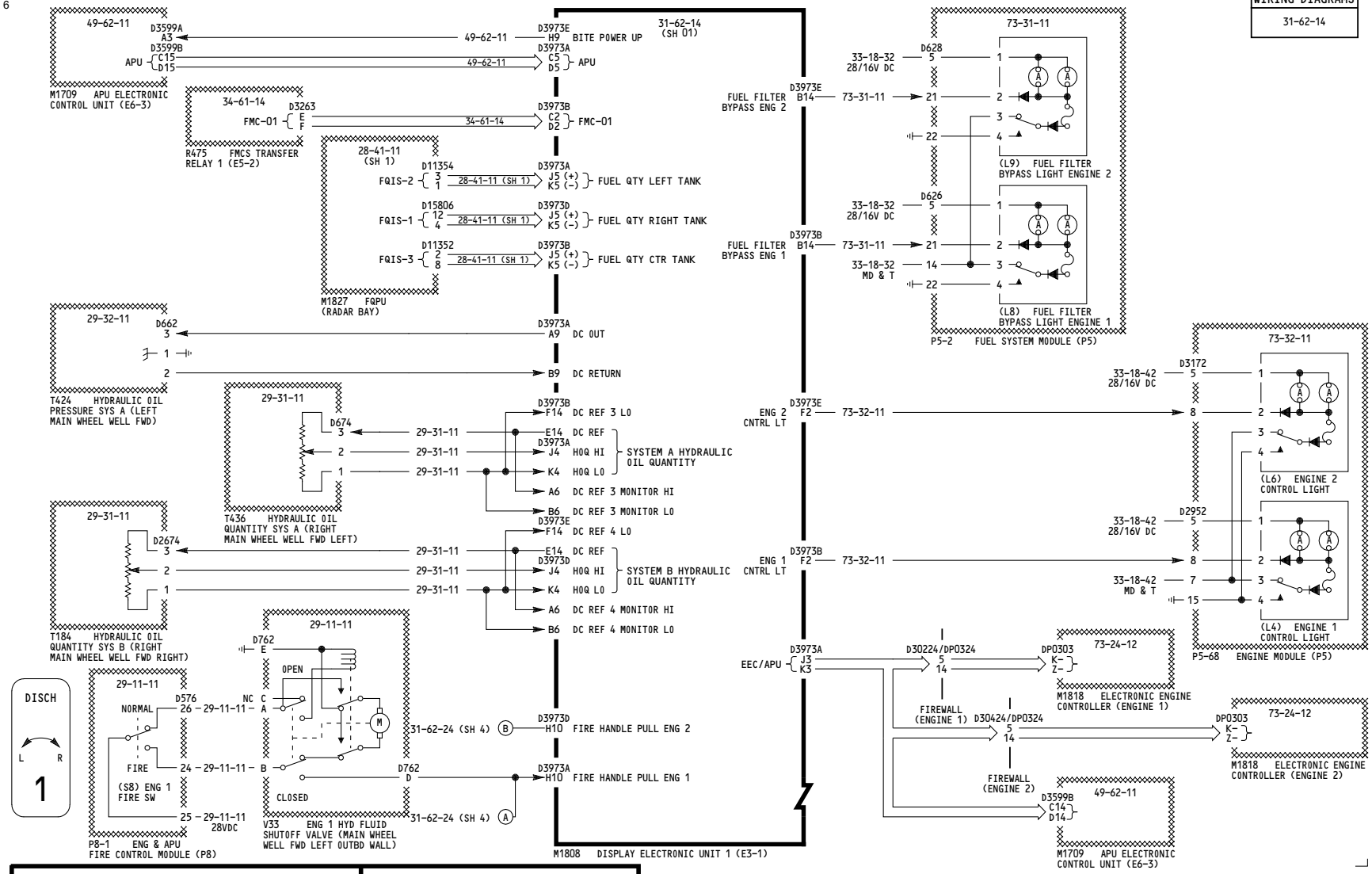

YT110-YT115, YT130-YT131

CDS - DEU 1 ENGINE HYDRAULIC, APU AND FUEL INTERFACES

D280A451

31-62-14

Page 102
Sheet 4
Aug 31/2015

BOEING PROPRIETARY - Copyright © - Unpublished Work - See title page for details.

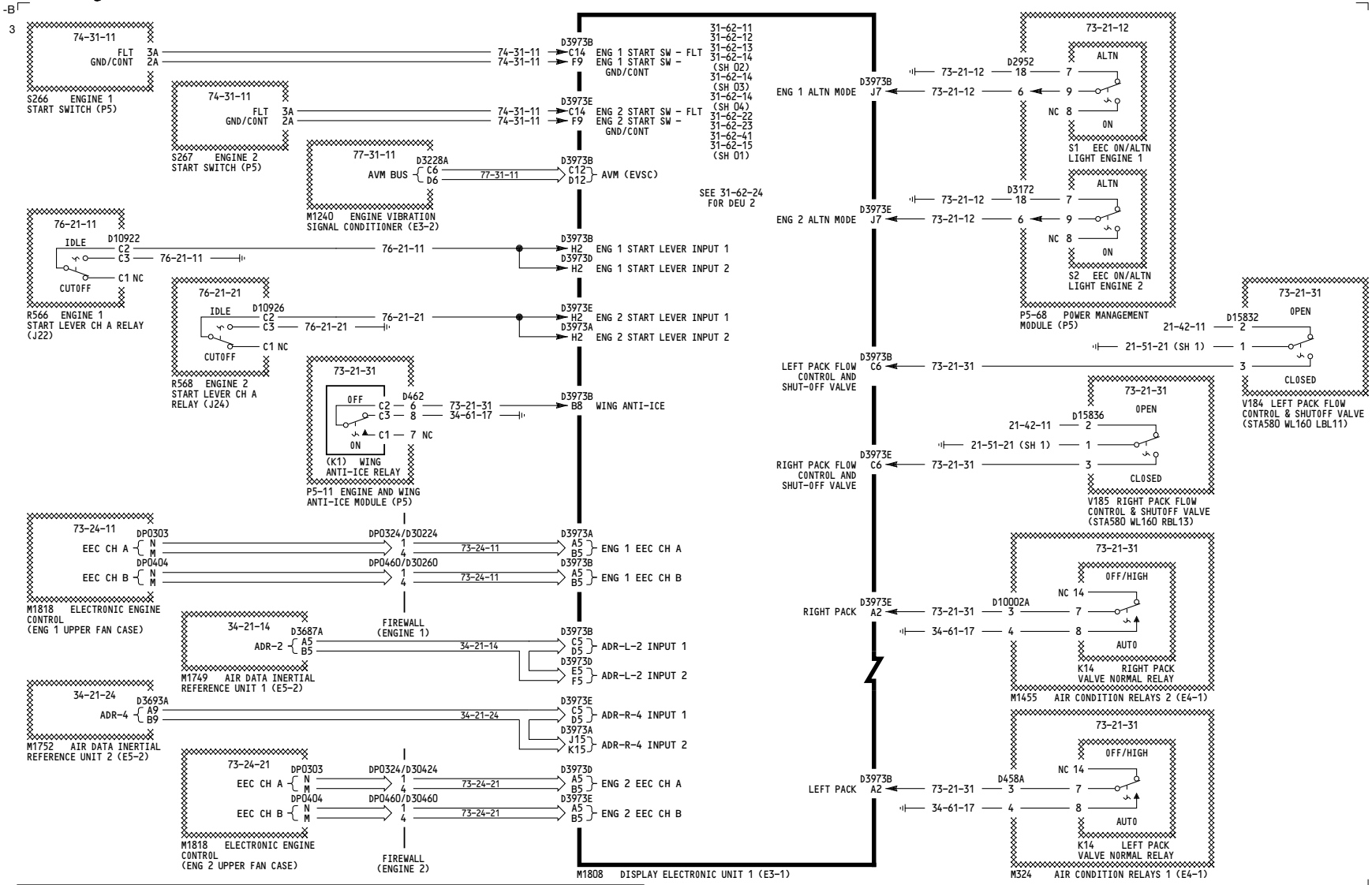

YT116-YT120, YT132-YT133

CDS - DEU 1 ENGINE HYDRAULIC, APU AND FUEL INTERFACES

D280A451

BOEING PROPRIETARY - Copyright © - Unpublished Work - See title page for details.

-M
1

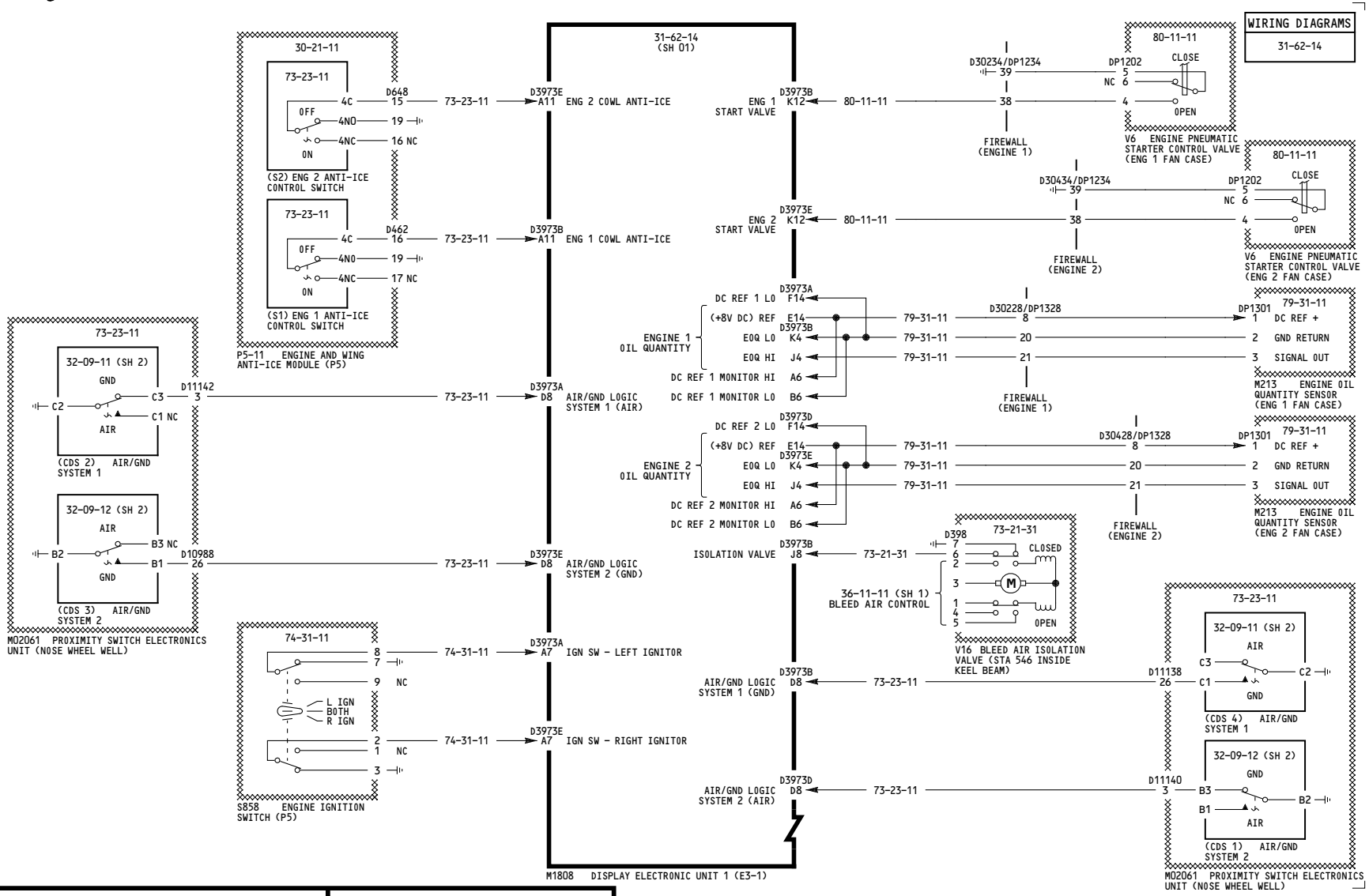

YT116-YT120, YT132-YT133

CDS - DEU 1 ENGINE HYDRAULIC, APU AND FUEL INTERFACES

D280A451

31-62-14

Page 103
Sheet 2
Jun 21/2016

BOEING PROPRIETARY - Copyright © - Unpublished Work - See title page for details.

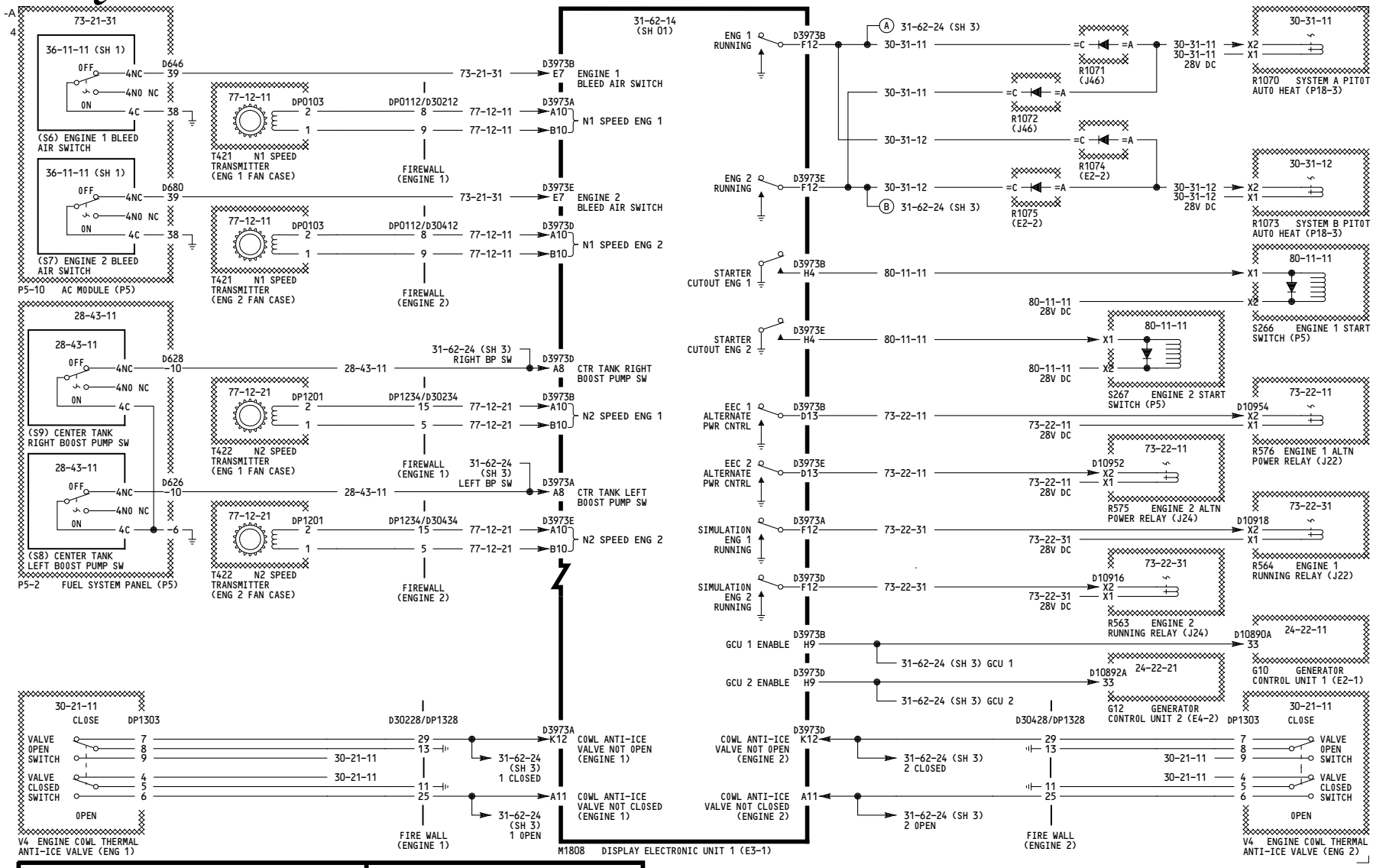

YT116-YT120, YT132-YT133

CDS - DEU 1 ENGINE HYDRAULIC, APU AND FUEL INTERFACES

D280A451

BOEING PROPRIETARY - Copyright © - Unpublished Work - See title page for details.

6

WIRING DIAGRAMS
31-62-14

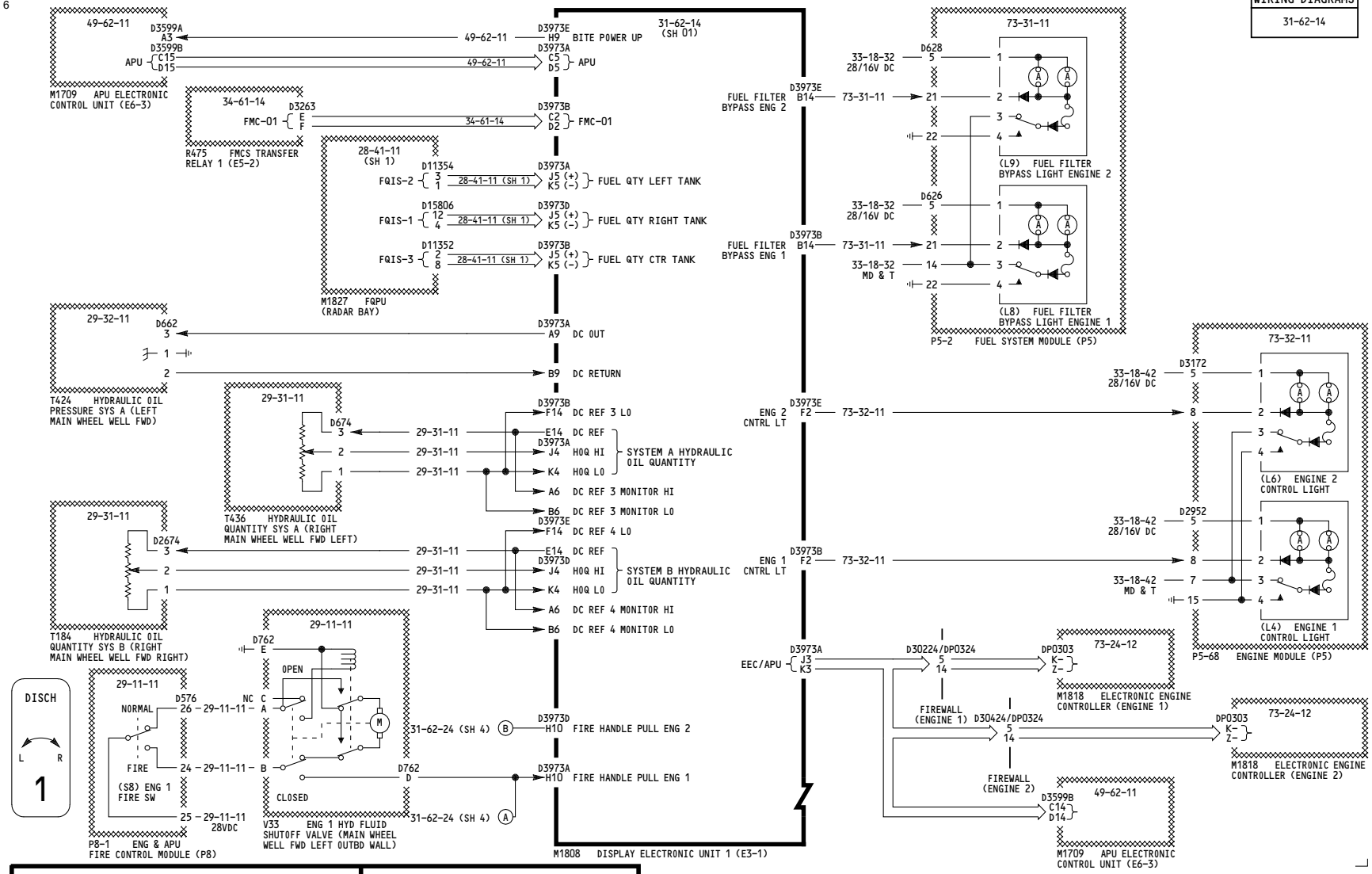

YT116-YT120, YT132-YT133

CDS - DEU 1 ENGINE HYDRAULIC, APU AND FUEL INTERFACES

D280A451

BOEING PROPRIETARY - Copyright © - Unpublished Work - See title page for details.

-A
23

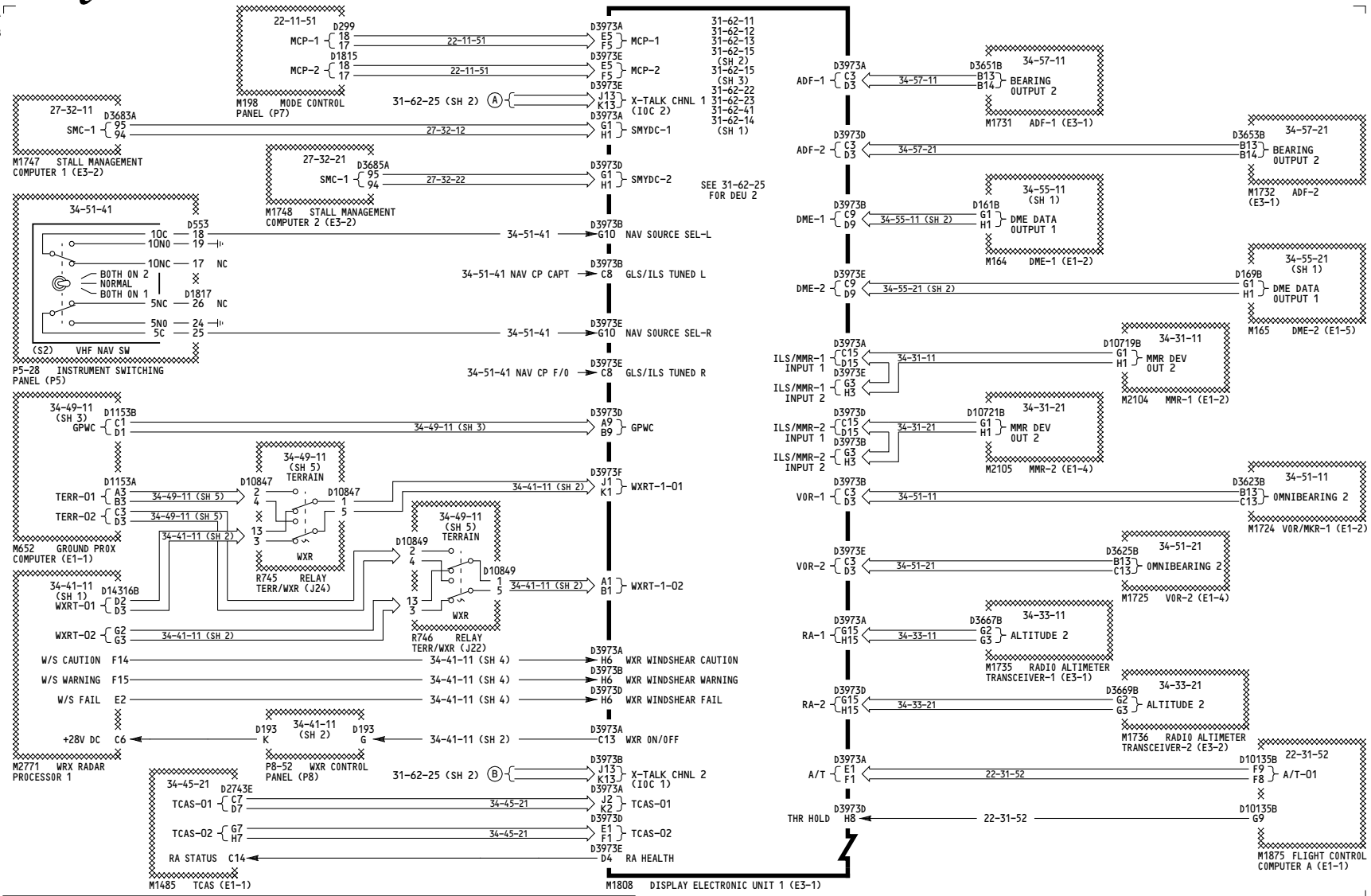

YT101-YT103

CDS - DEU 1 AVIONICS INTERFACES

D280A451

BOEING PROPRIETARY - Copyright © - Unpublished Work - See title page for details.

52

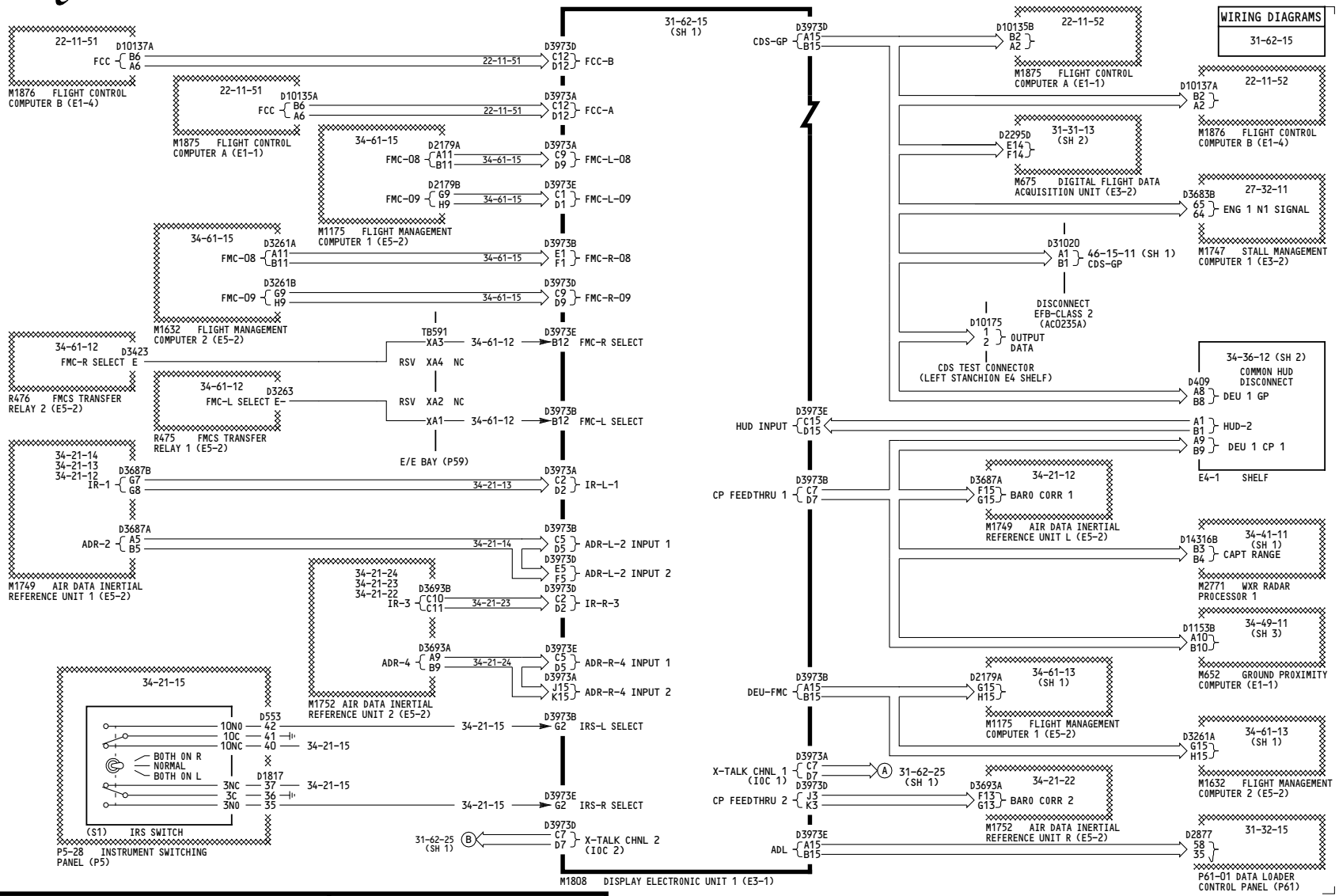

YT101-YT103

CDS - DEU 1 AVIONICS INTERFACES

D280A451

31-62-15

Page 101
Sheet 2
Aug 15/2013

BOEING PROPRIETARY - Copyright © - Unpublished Work - See title page for details.

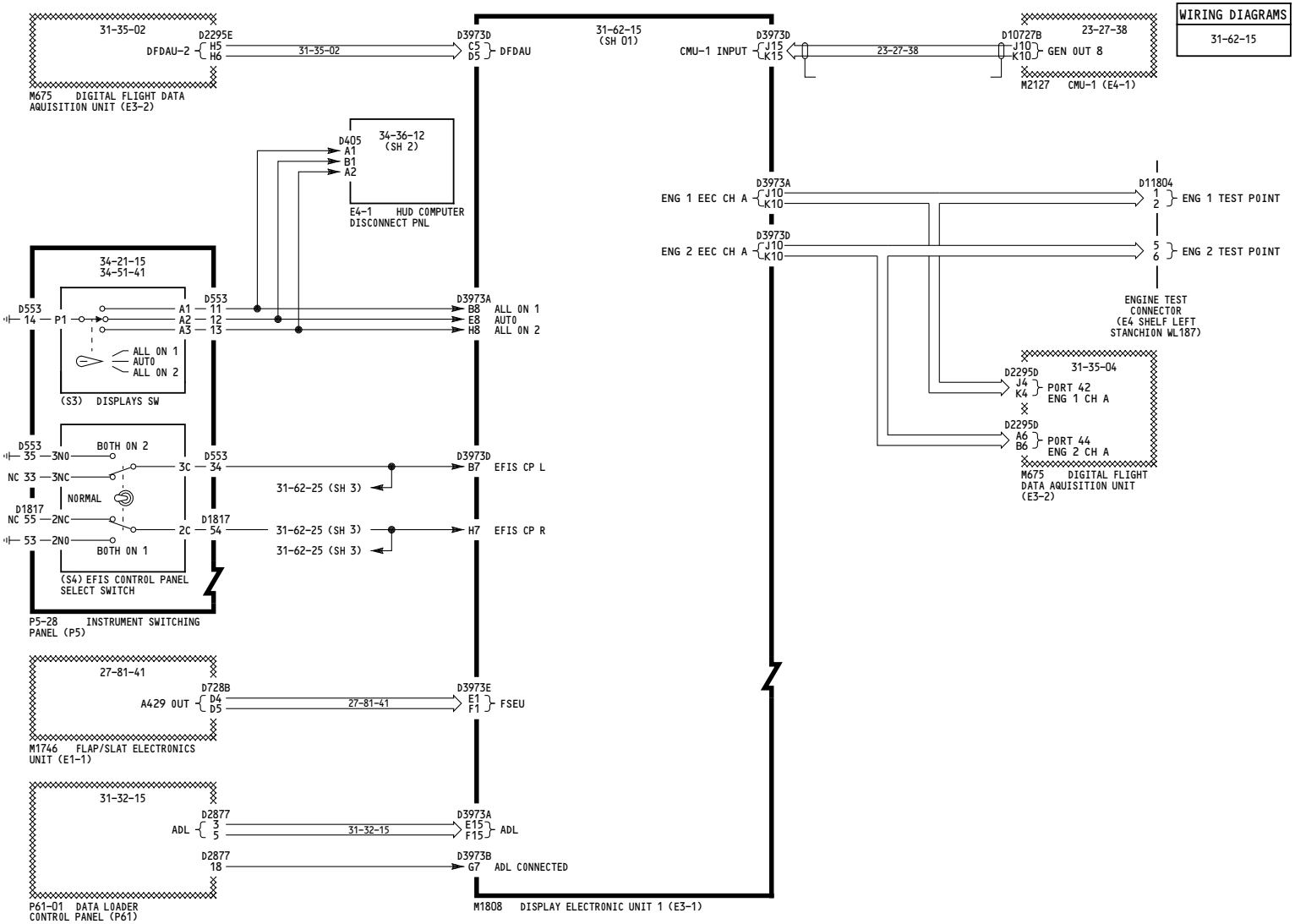

YT101-YT103

CDS - DEU 1 AVIONICS INTERFACES

D280A451

BOEING PROPRIETARY - Copyright © - Unpublished Work - See title page for details.

THIS PAGE INTENTIONALLY LEFT BLANK

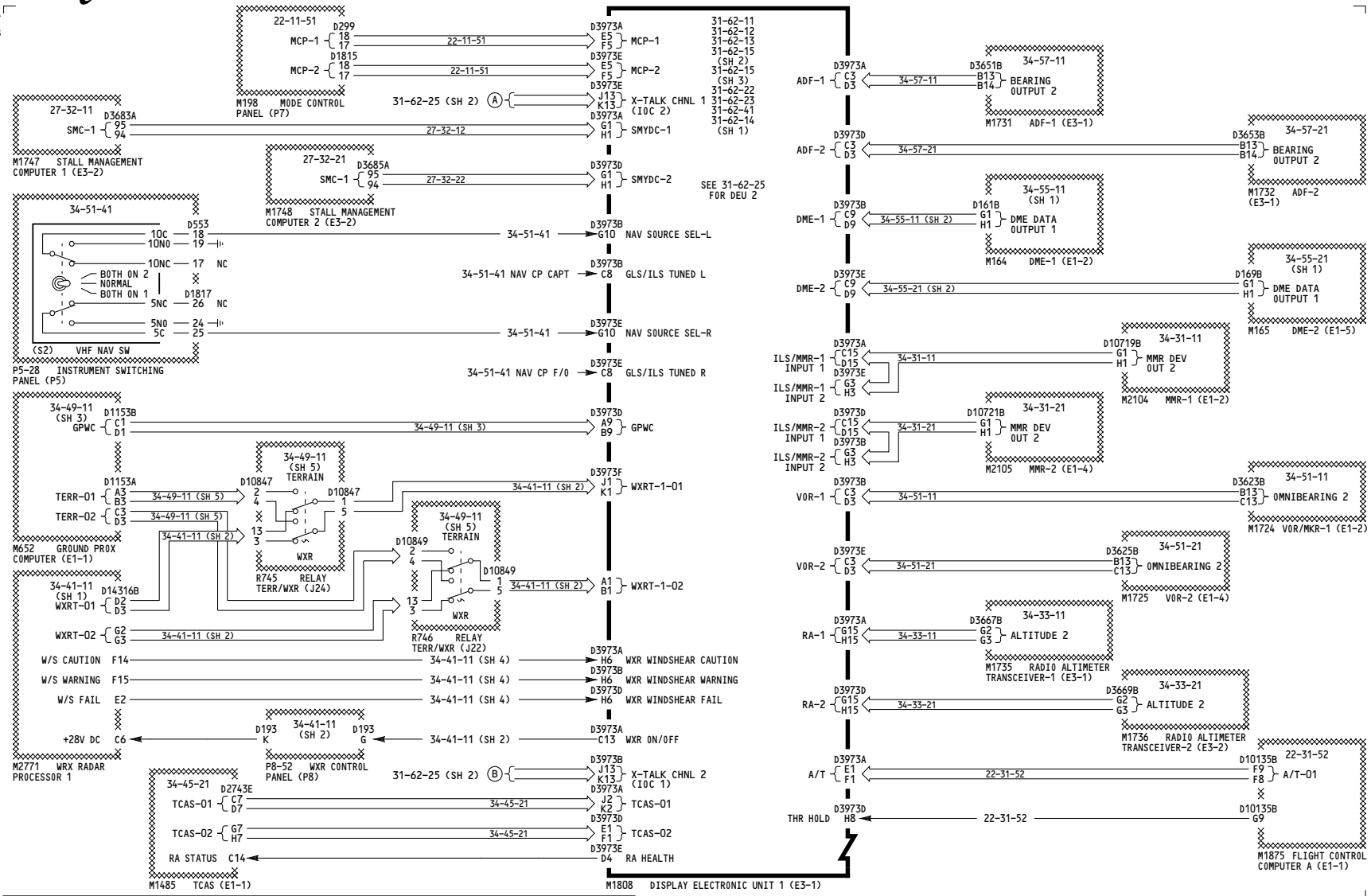

YT104-YT105

CDS - DEU 1 AVIONICS INTERFACES

D280A451

31-62-15

Page 102
Sheet 1
Apr 17/2014

BOEING PROPRIETARY - Copyright © - Unpublished Work - See title page for details.

66

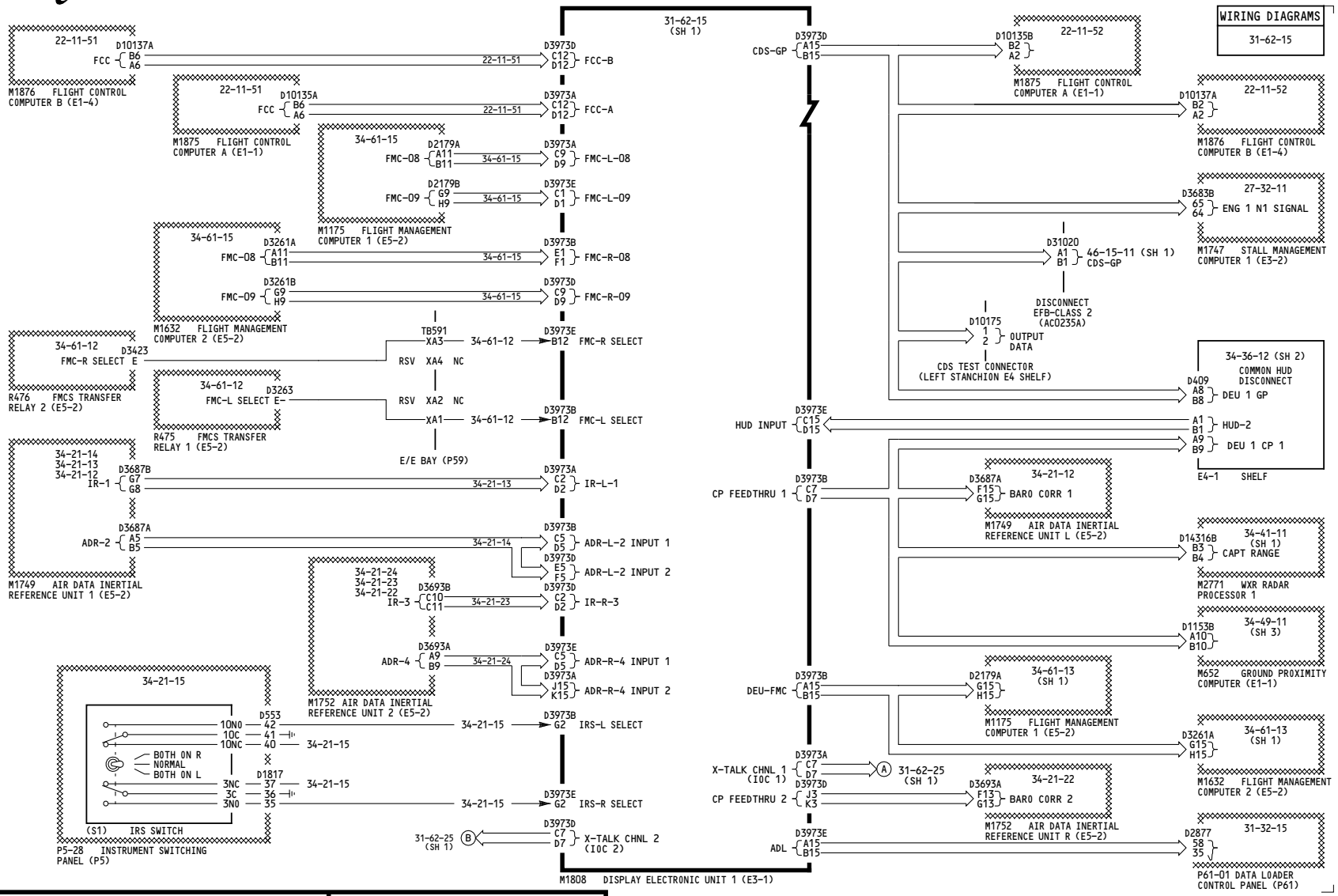

YT104-YT105

CDS - DEU 1 AVIONICS INTERFACES

D280A451

BOEING PROPRIETARY - Copyright © - Unpublished Work - See title page for details.

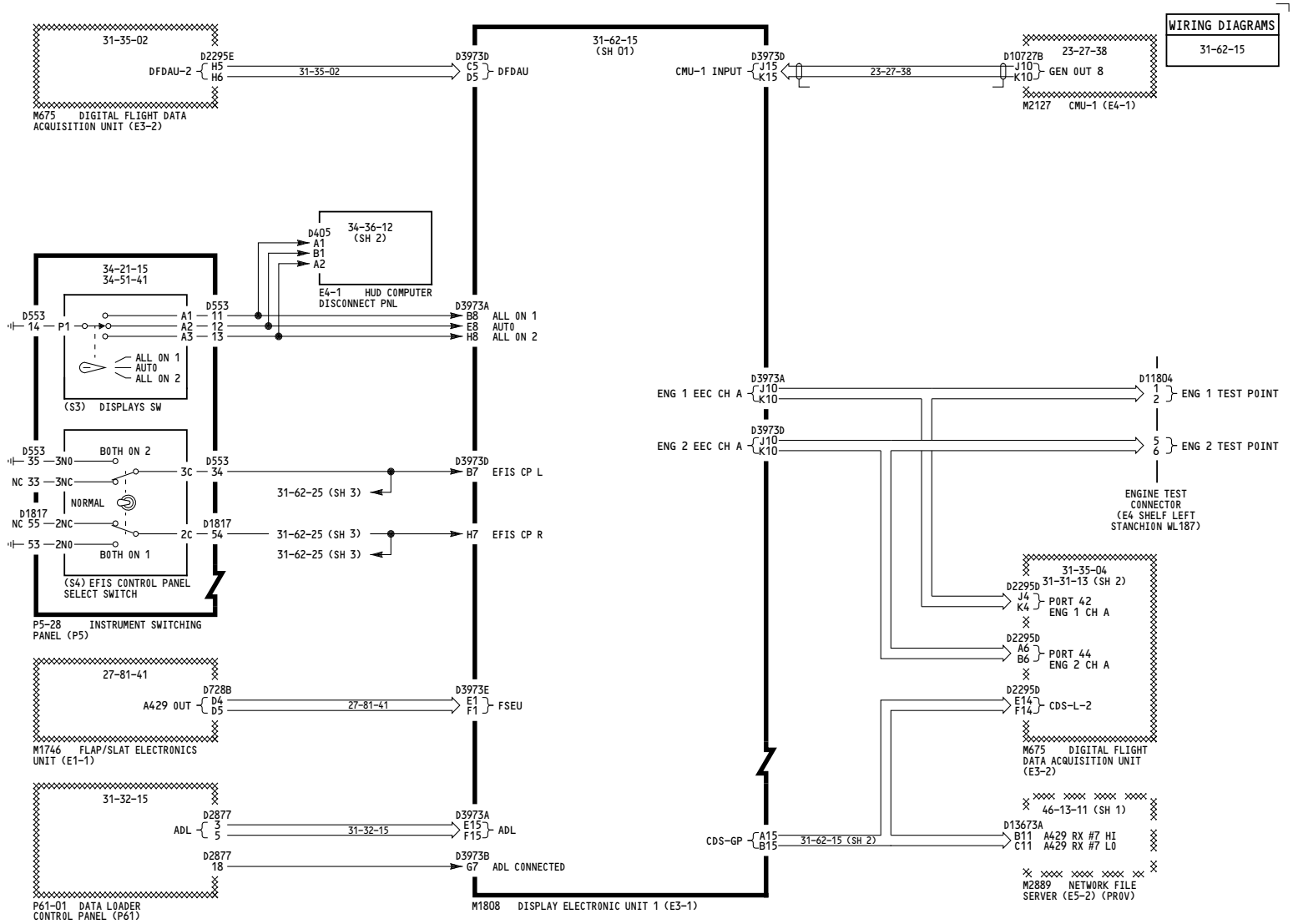

YT104-YT105

CDS - DEU 1 AVIONICS INTERFACES

D280A451

BOEING PROPRIETARY - Copyright © - Unpublished Work - See title page for details.

THIS PAGE INTENTIONALLY LEFT BLANK

-A
23

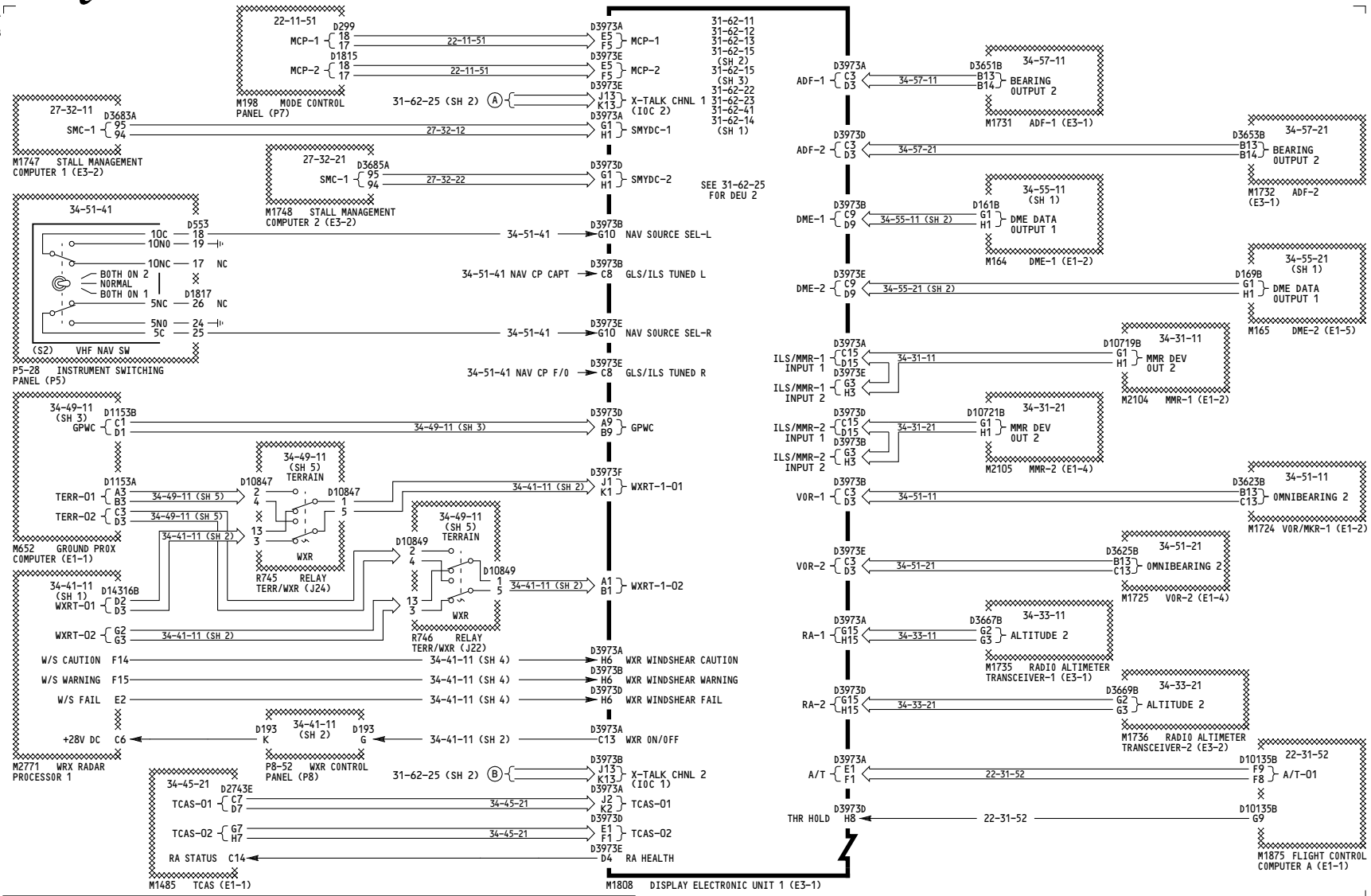

YT106-YT120

CDS - DEU 1 AVIONICS INTERFACES

D280A451

31-62-15

Page 103
Sheet 1
Mar 14/2016

BOEING PROPRIETARY - Copyright © - Unpublished Work - See title page for details.

66

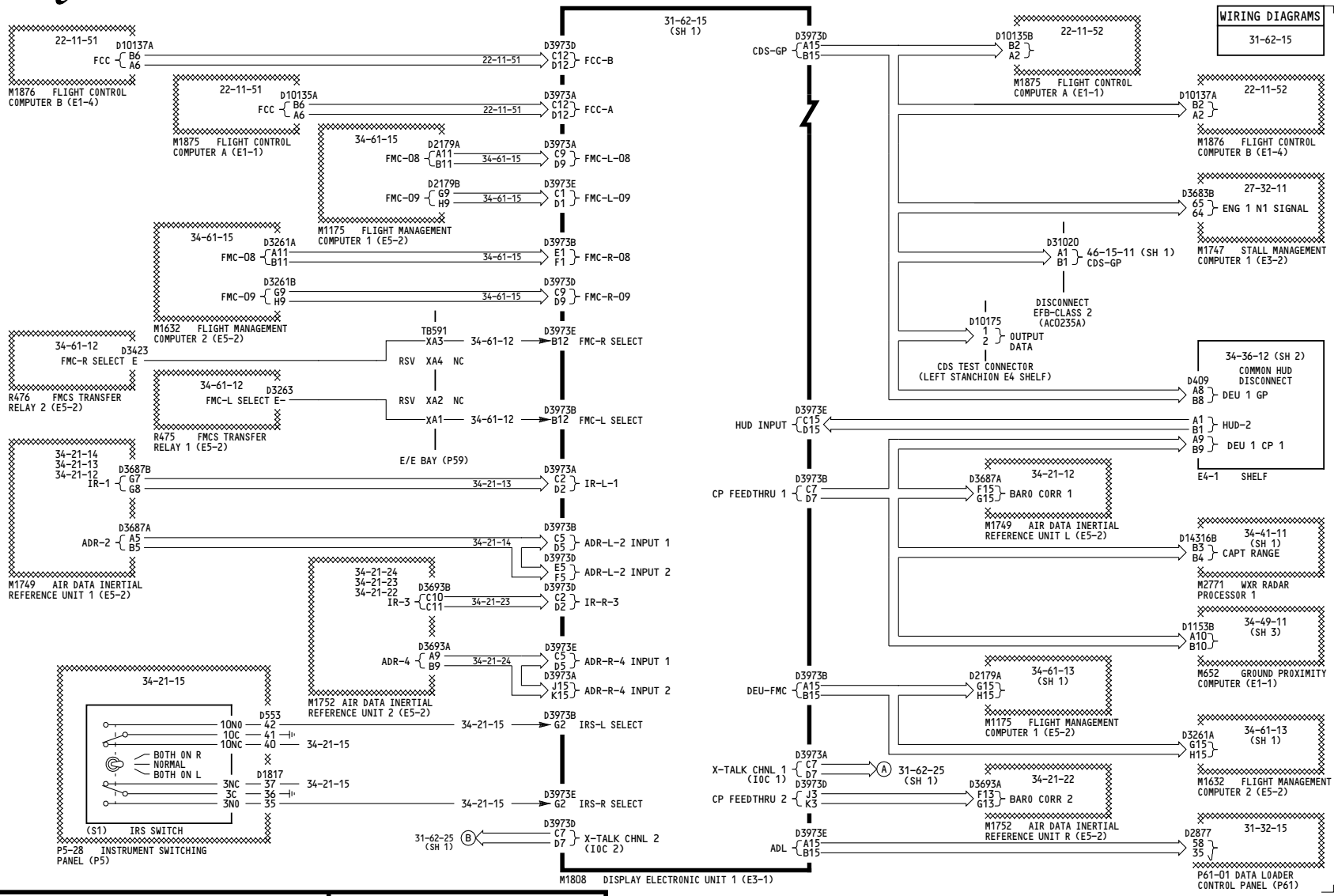

YT106-YT120

CDS - DEU 1 AVIONICS INTERFACES

D280A451

BOEING PROPRIETARY - Copyright © - Unpublished Work - See title page for details.

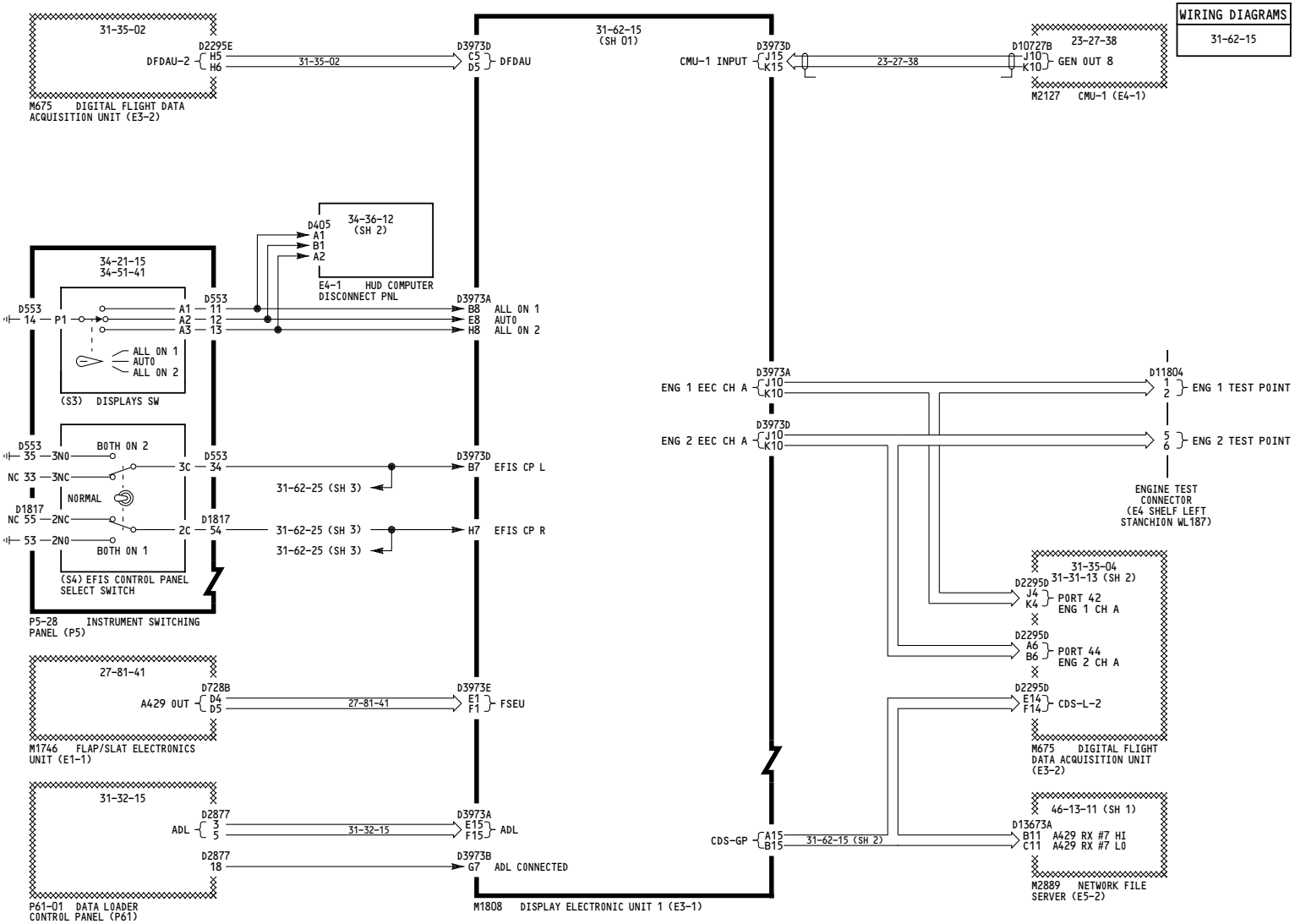

YT106-YT120

CDS - DEU 1 AVIONICS INTERFACES

D280A451

BOEING PROPRIETARY - Copyright © - Unpublished Work - See title page for details.

THIS PAGE INTENTIONALLY LEFT BLANK

-A
23

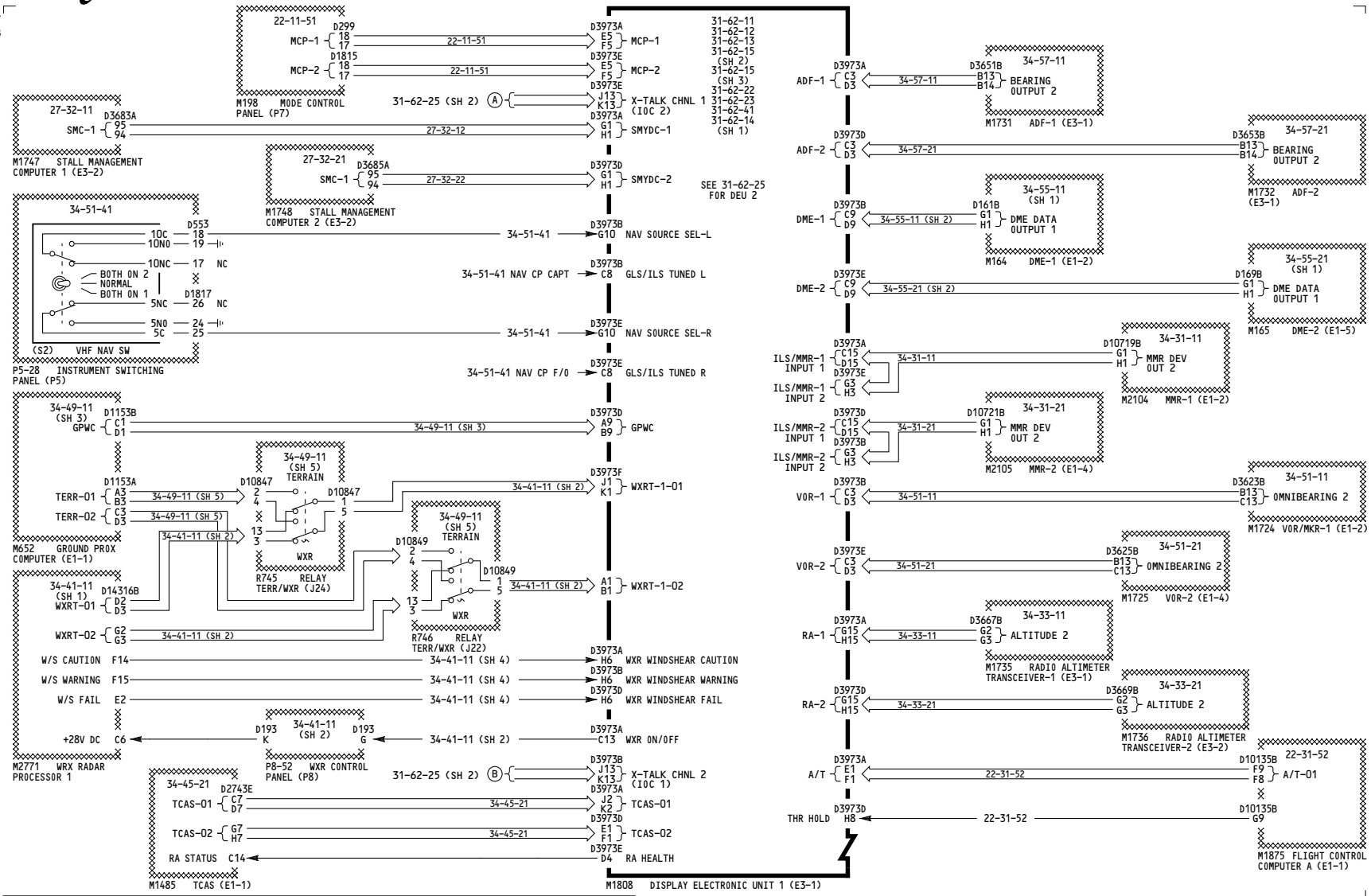

YT126-YT133

CDS - DEU 1 AVIONICS INTERFACES

D280A451

BOEING PROPRIETARY - Copyright © - Unpublished Work - See title page for details.

65

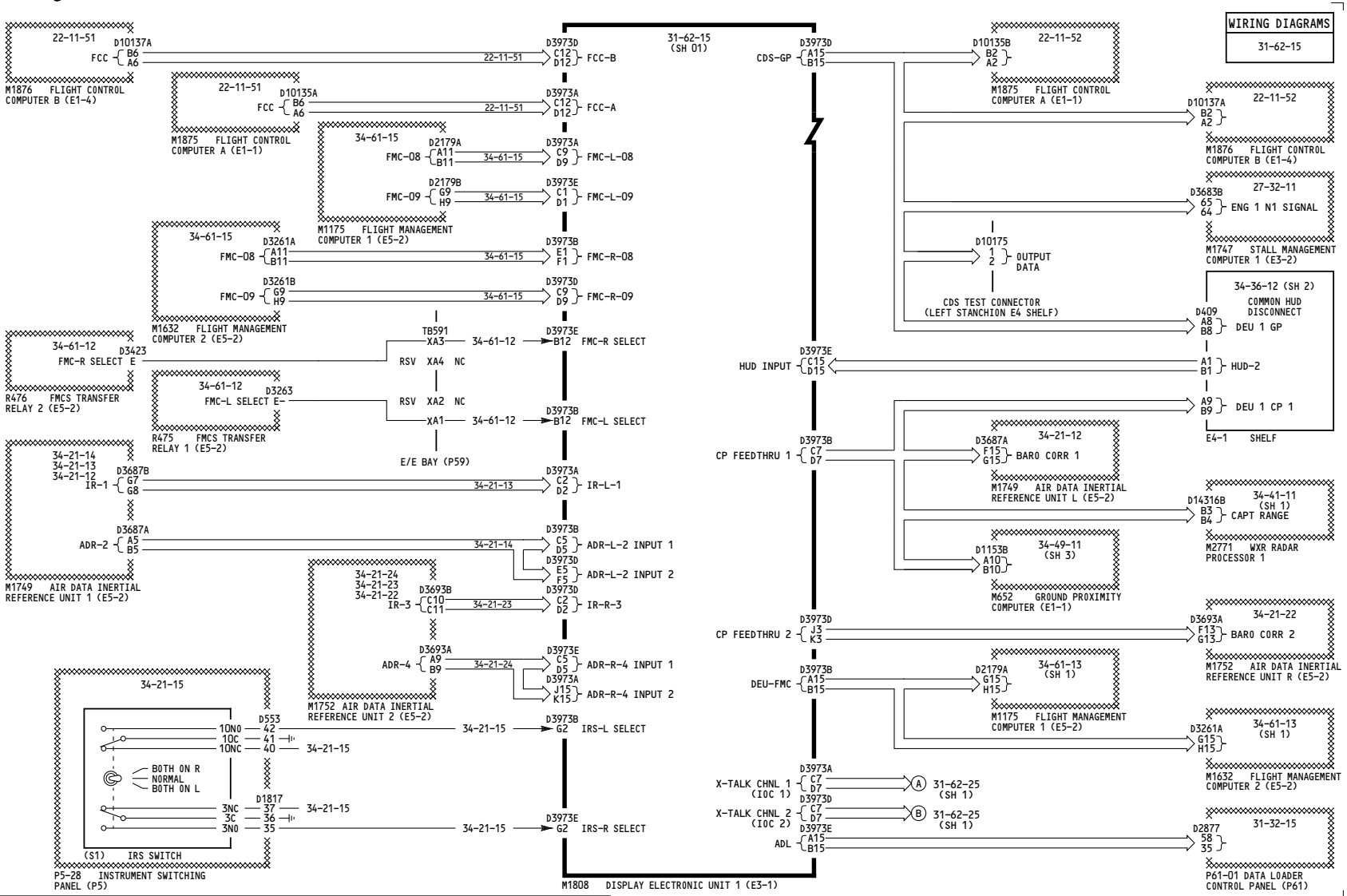

YT126-YT133

CDS - DEU 1 AVIONICS INTERFACES

D280A451

BOEING PROPRIETARY - Copyright © - Unpublished Work - See title page for details.

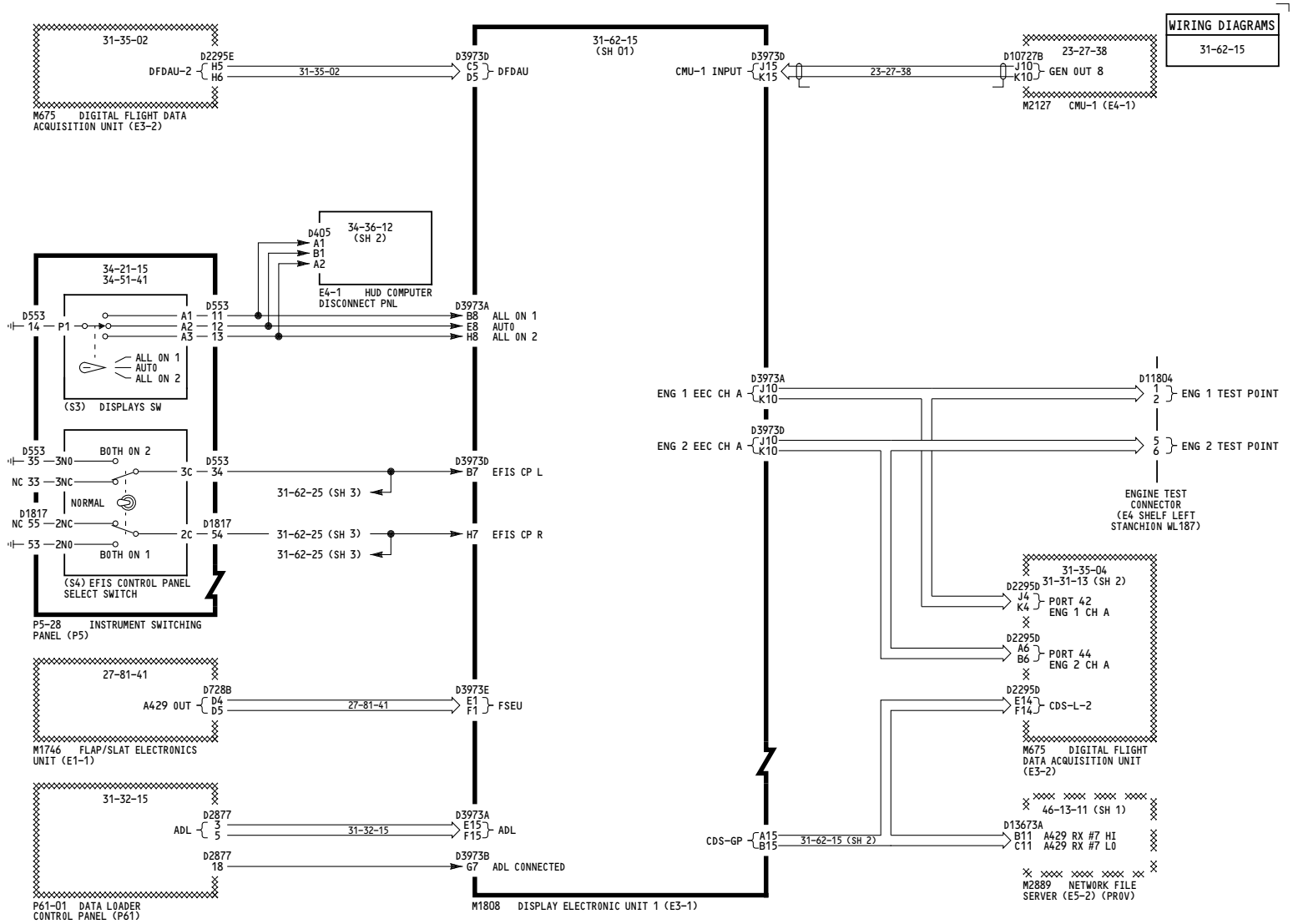

YT126-YT133

CDS - DEU 1 AVIONICS INTERFACES

D280A451

BOEING PROPRIETARY - Copyright © - Unpublished Work - See title page for details.

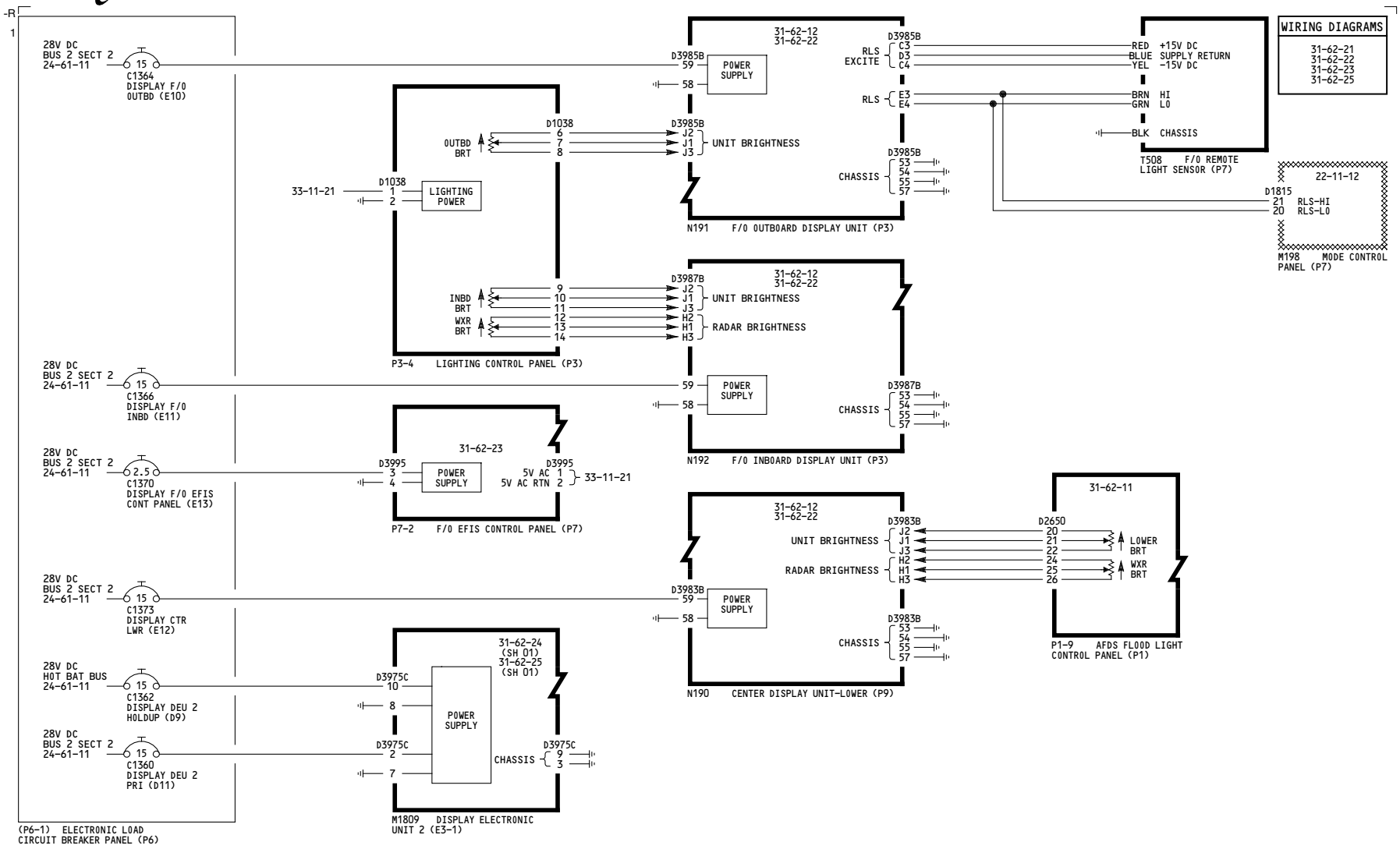

ALL	**CDS - POWER DISTRIBUTION AND INSTRUMENT LIGHTING FIRST OFFICER** D280A451

BOEING PROPRIETARY - Copyright © - Unpublished Work - See title page for details.

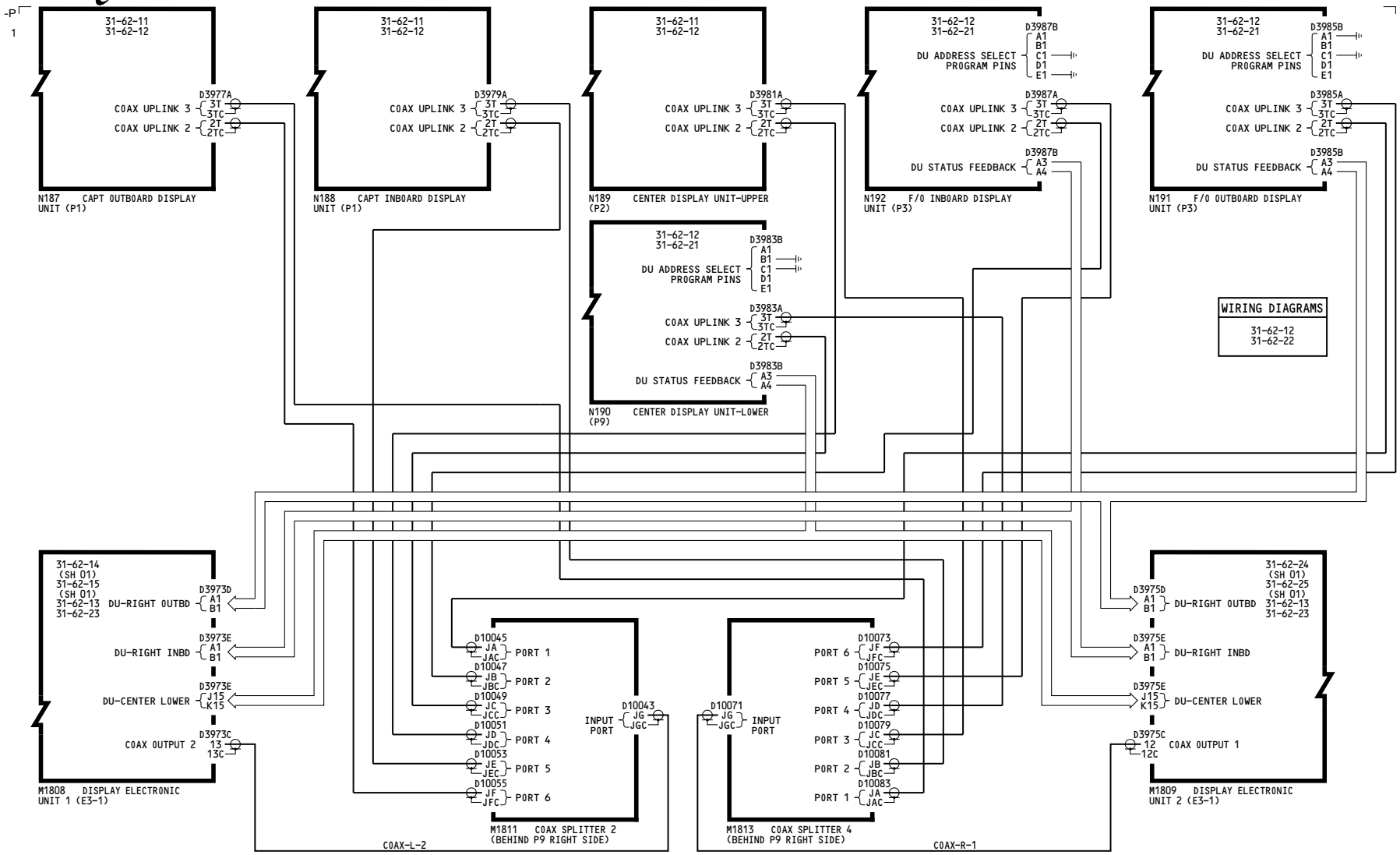

ALL

CDS - VIDEO COAX SPLITTERS 2 AND 4 DU STATUS

D280A451

BOEING PROPRIETARY - Copyright © - Unpublished Work - See title page for details.

-B
3

WIRING DIAGRAMS
31-62-23

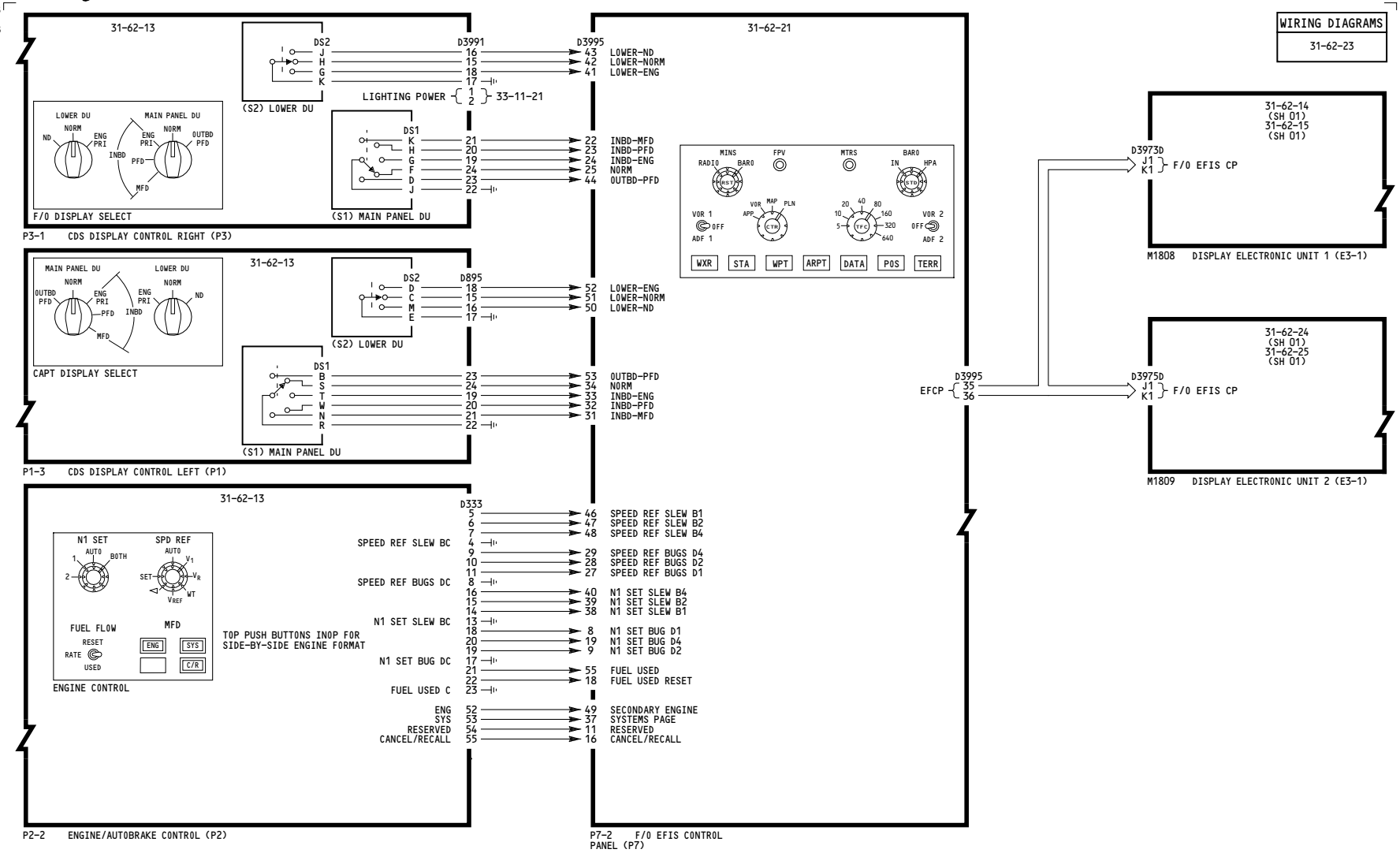

ALL

CDS - CONTROL PANEL INTERFACES F/O

D280A451

BOEING PROPRIETARY - Copyright © - Unpublished Work - See title page for details.

-D
2

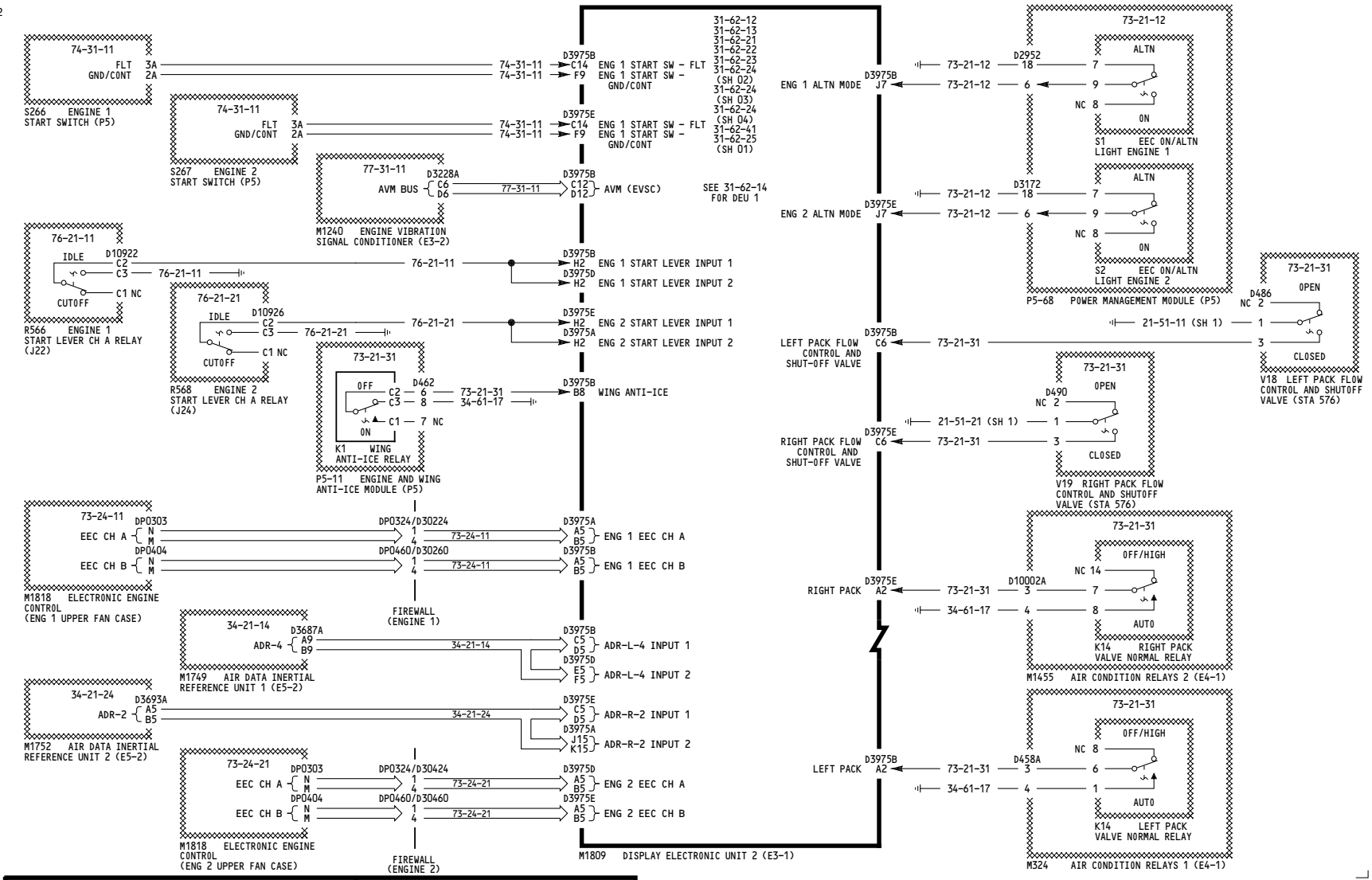

YT101-YT109, YT126-YT129

CDS - DEU 2 ENGINE HYDRAULIC, APU AND FUEL INTERFACES

D280A451

31-62-24

BOEING PROPRIETARY - Copyright © - Unpublished Work - See title page for details.

-M
1

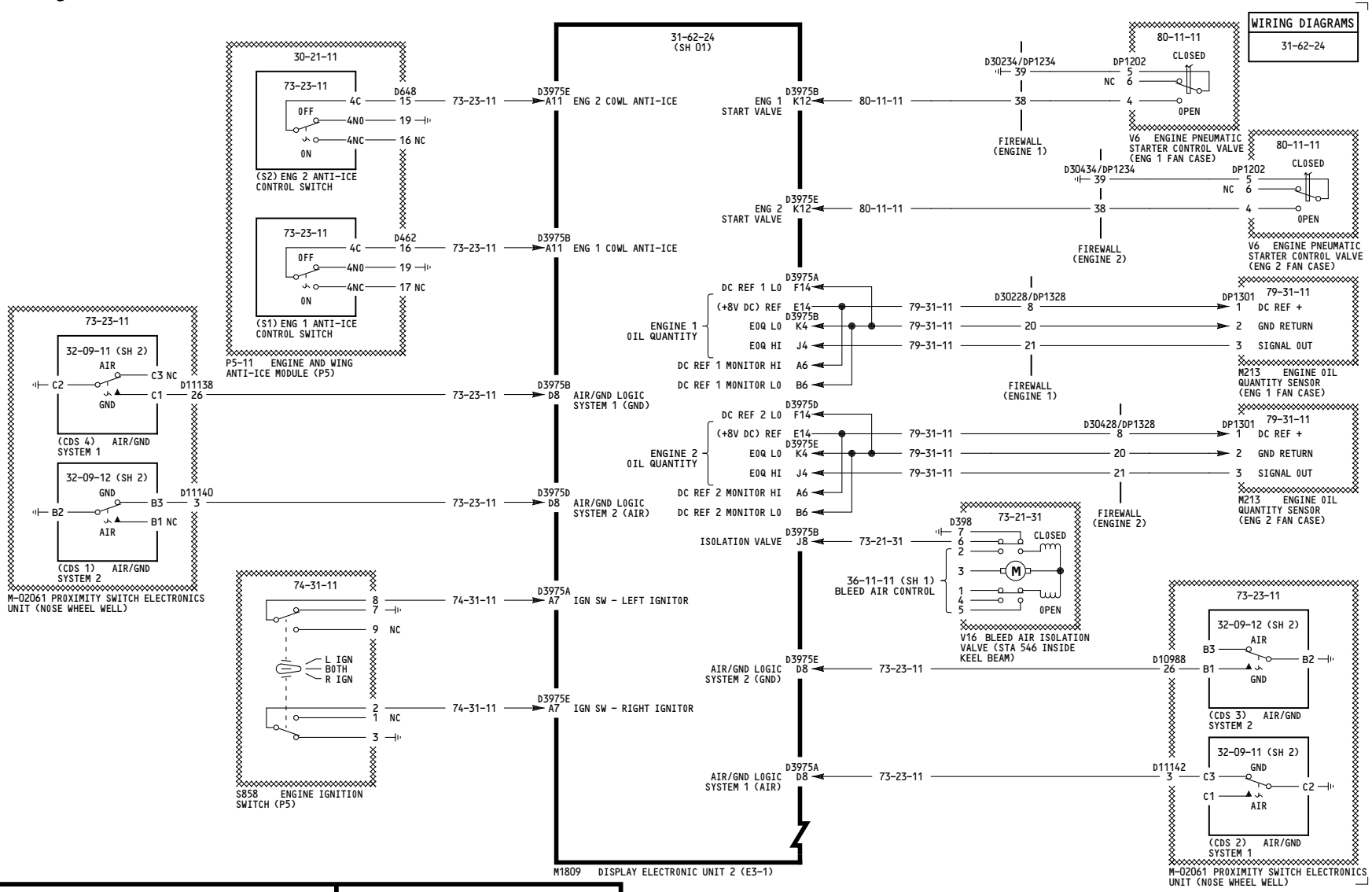

YT101-YT109, YT126-YT129

CDS - DEU 2 ENGINE HYDRAULIC, APU AND FUEL INTERFACES

D280A451

BOEING PROPRIETARY - Copyright © - Unpublished Work - See title page for details.

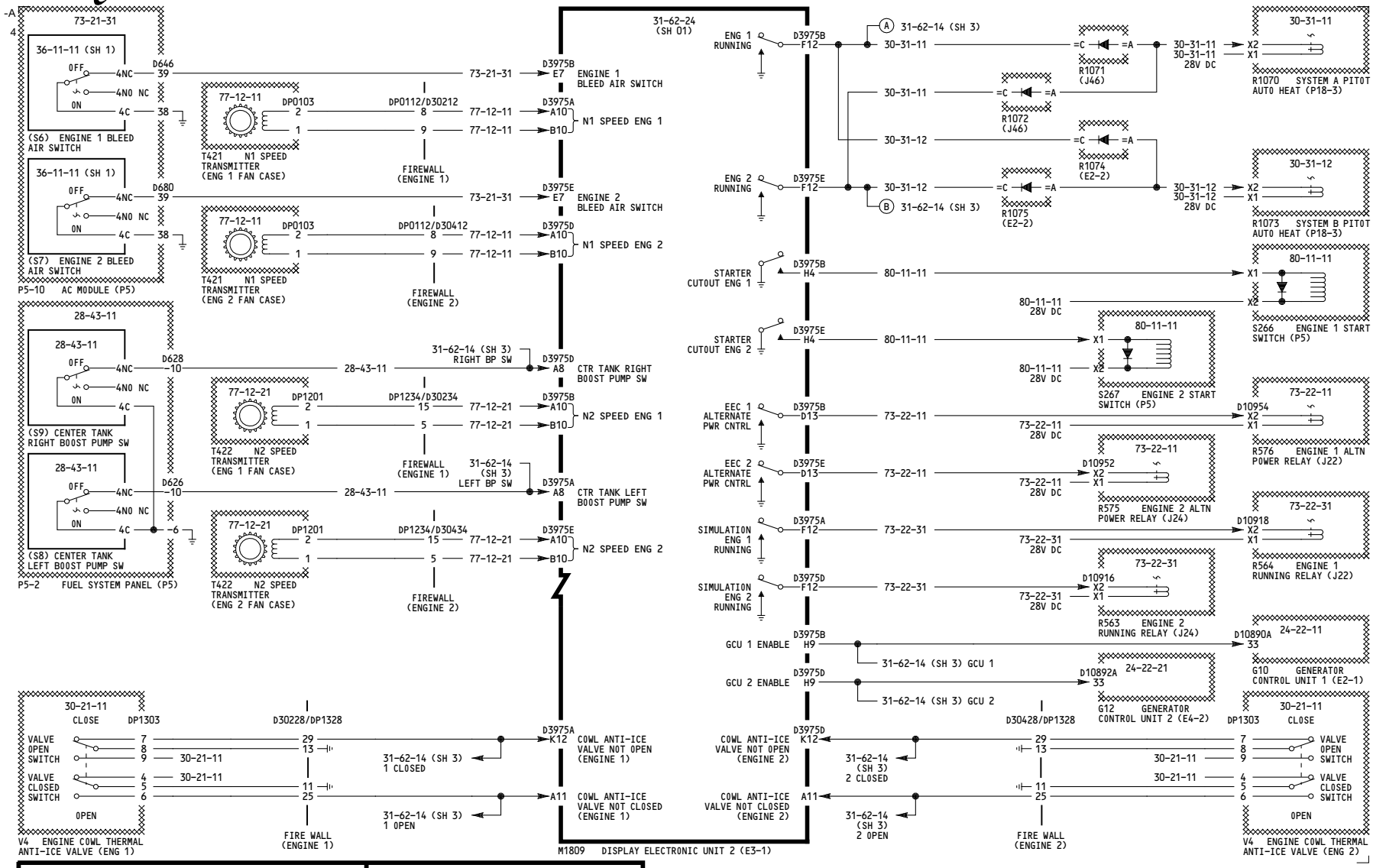

YT101-YT109, YT126-YT129

CDS - DEU 2 ENGINE HYDRAULIC, APU AND FUEL INTERFACES

D280A451

BOEING PROPRIETARY - Copyright © - Unpublished Work - See title page for details.

3

WIRING DIAGRAMS
31-62-24

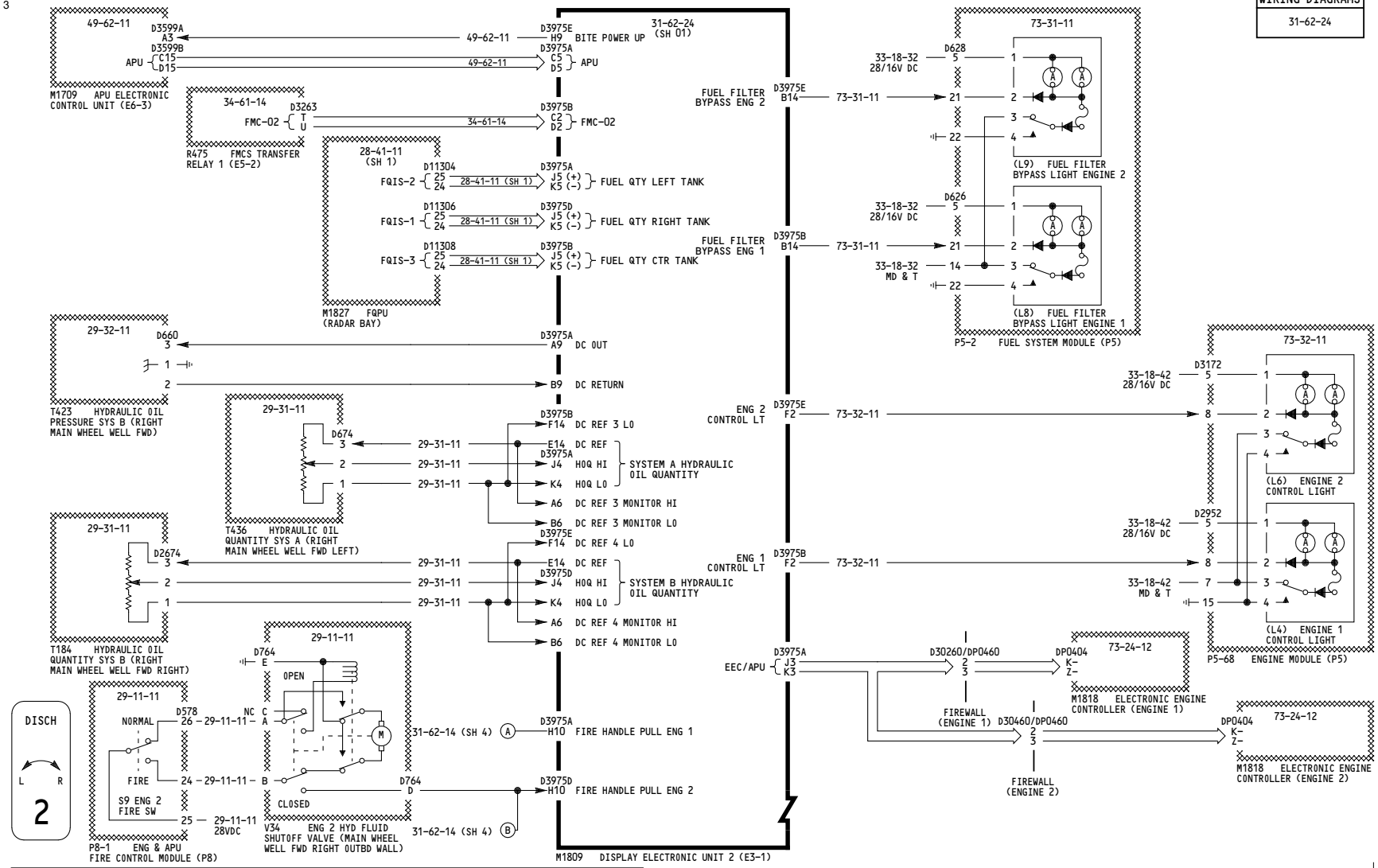

YT101-YT109, YT126-YT129

CDS - DEU 2 ENGINE HYDRAULIC, APU AND FUEL INTERFACES

D280A451

BOEING PROPRIETARY - Copyright © - Unpublished Work - See title page for details.

-D
2

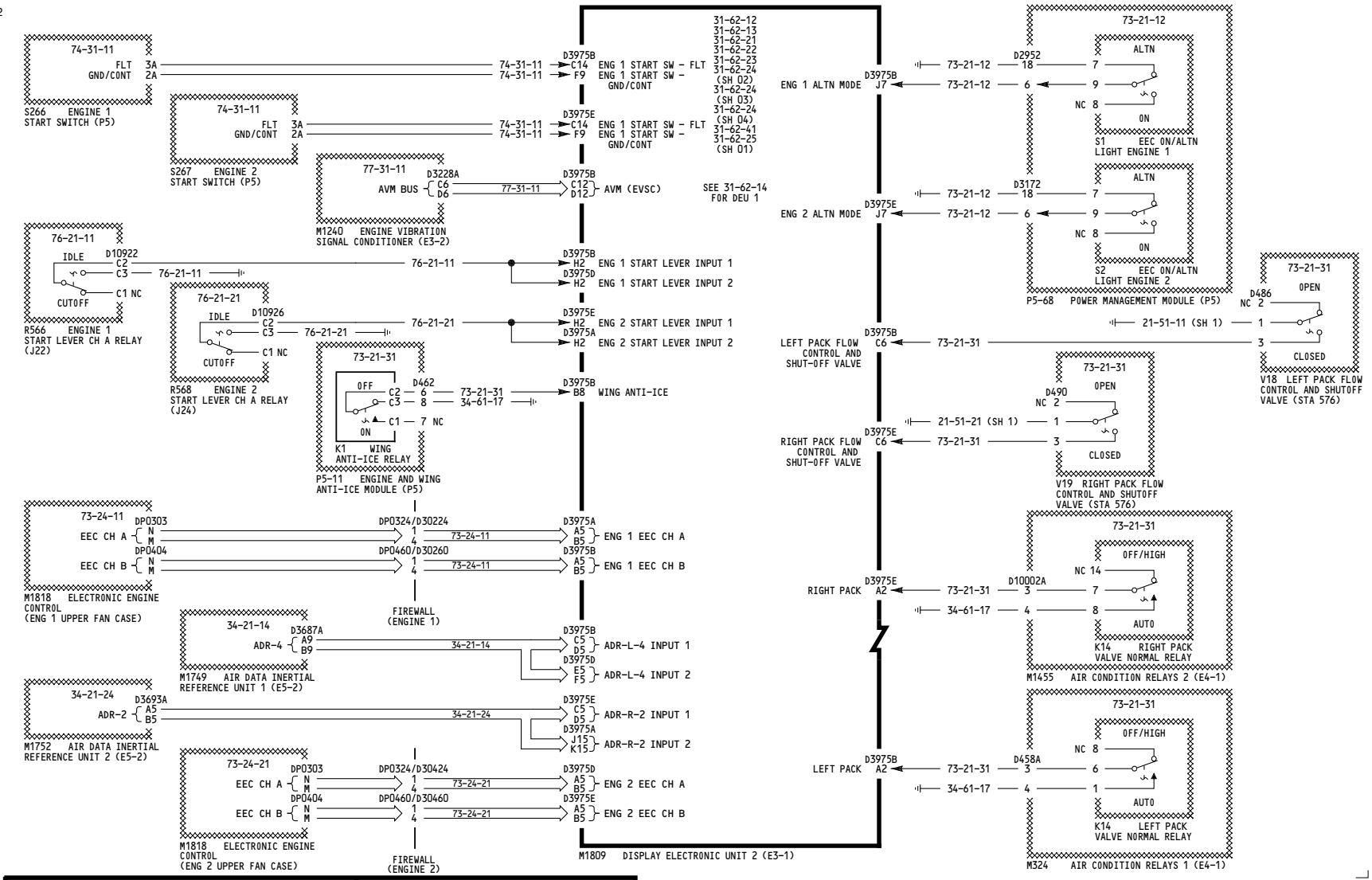

YT110-YT115, YT130-YT131

CDS - DEU 2 ENGINE HYDRAULIC, APU AND FUEL INTERFACES

D280A451

31-62-24

BOEING PROPRIETARY - Copyright © - Unpublished Work - See title page for details.

-M
1

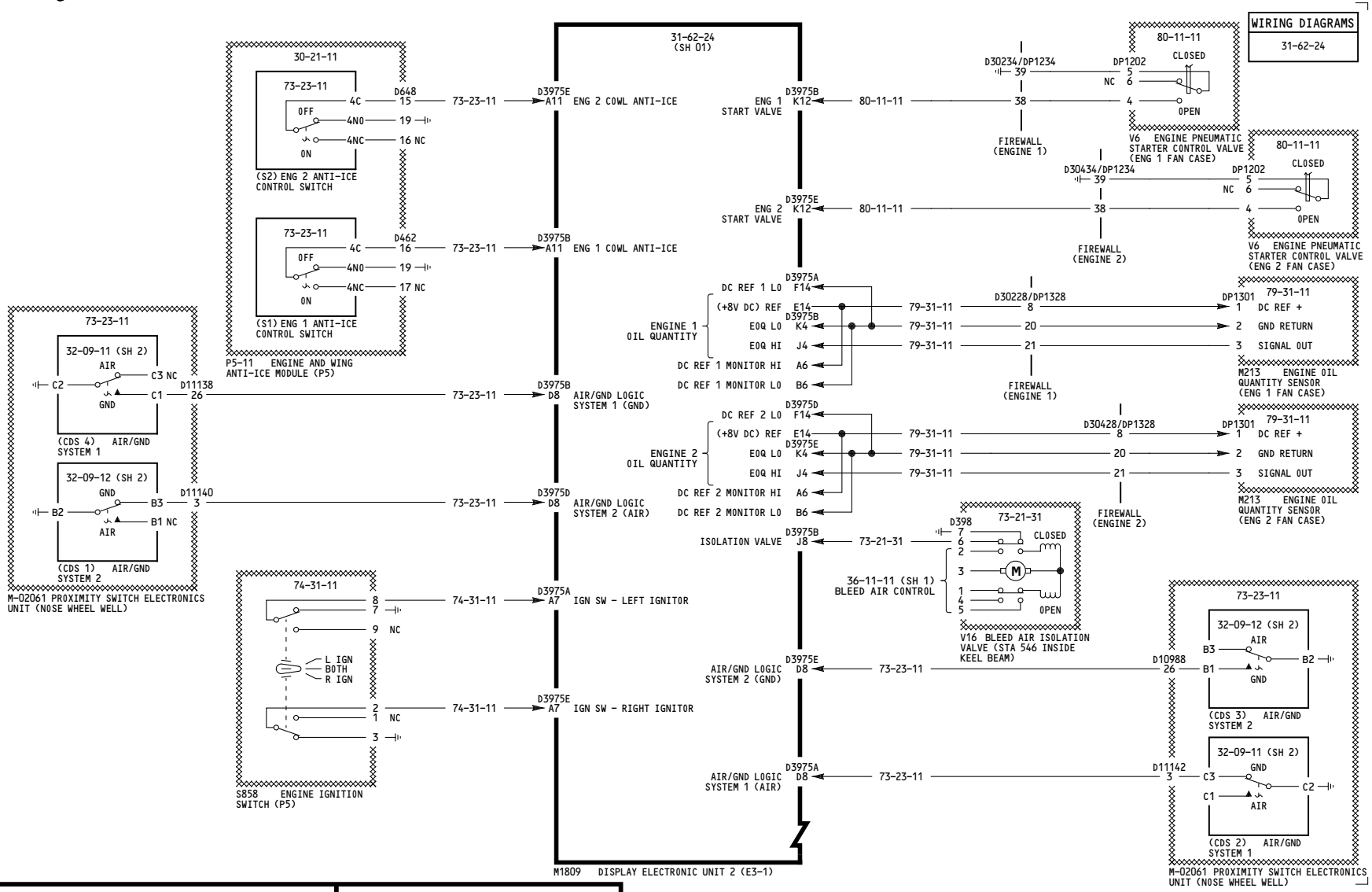

YT110-YT115, YT130-YT131

CDS - DEU 2 ENGINE HYDRAULIC, APU AND FUEL INTERFACES

D280A451

BOEING PROPRIETARY - Copyright © - Unpublished Work - See title page for details.

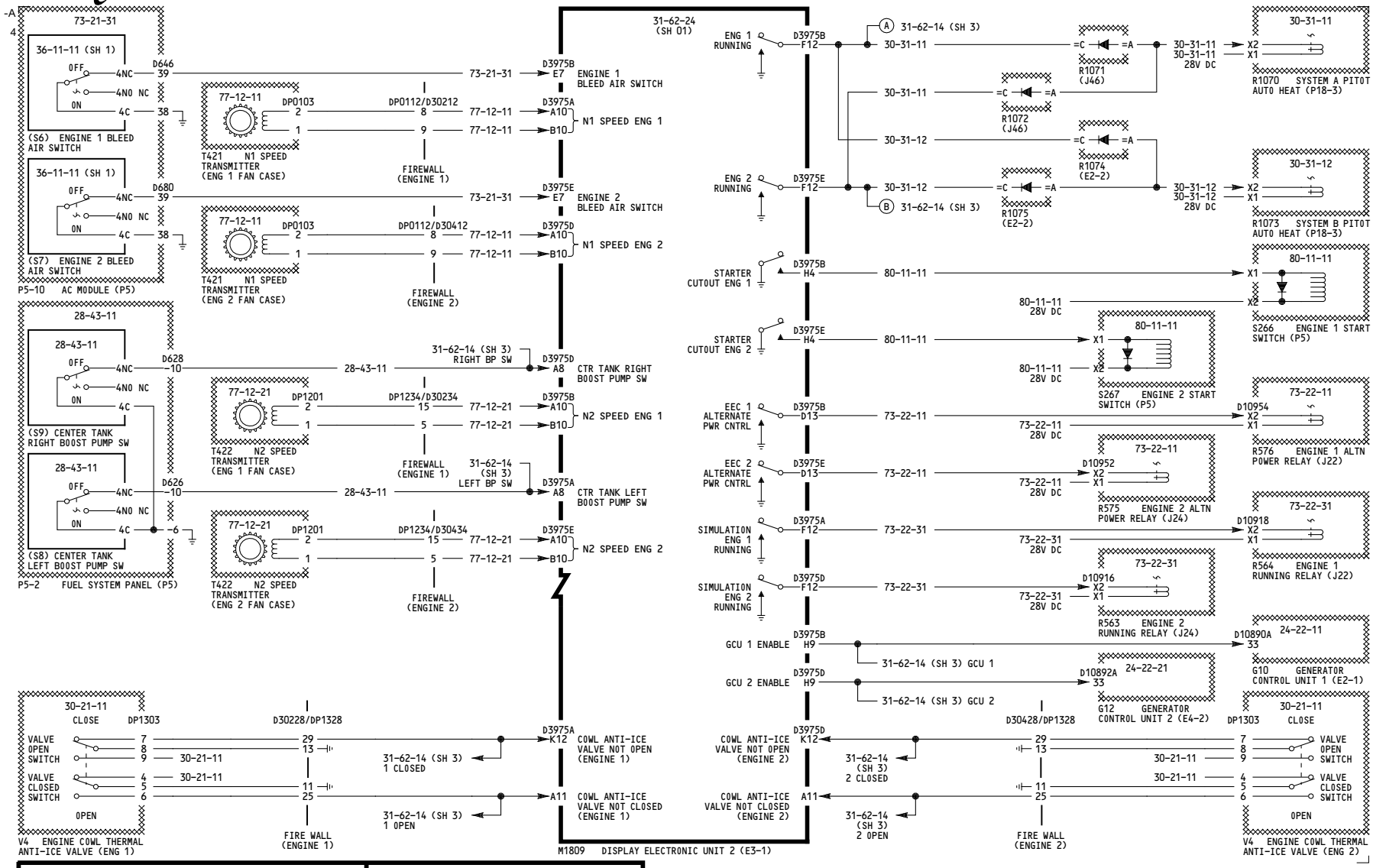

YT110-YT115, YT130-YT131

CDS - DEU 2 ENGINE HYDRAULIC, APU AND FUEL INTERFACES

D280A451

BOEING PROPRIETARY - Copyright © - Unpublished Work - See title page for details.

6

WIRING DIAGRAMS
31-62-24

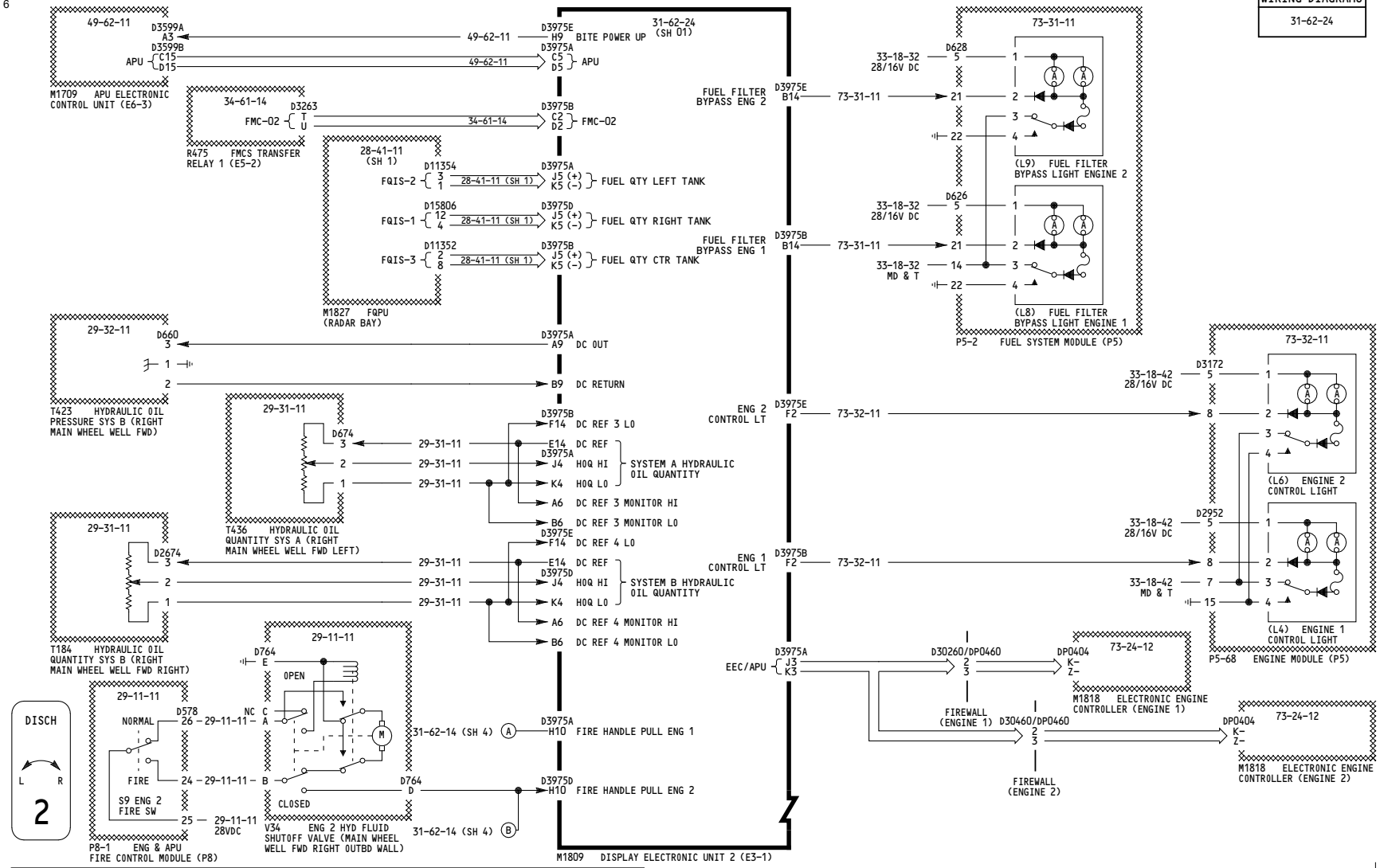

YT110-YT115, YT130-YT131

CDS - DEU 2 ENGINE HYDRAULIC, APU AND FUEL INTERFACES

D280A451

BOEING PROPRIETARY - Copyright © - Unpublished Work - See title page for details.

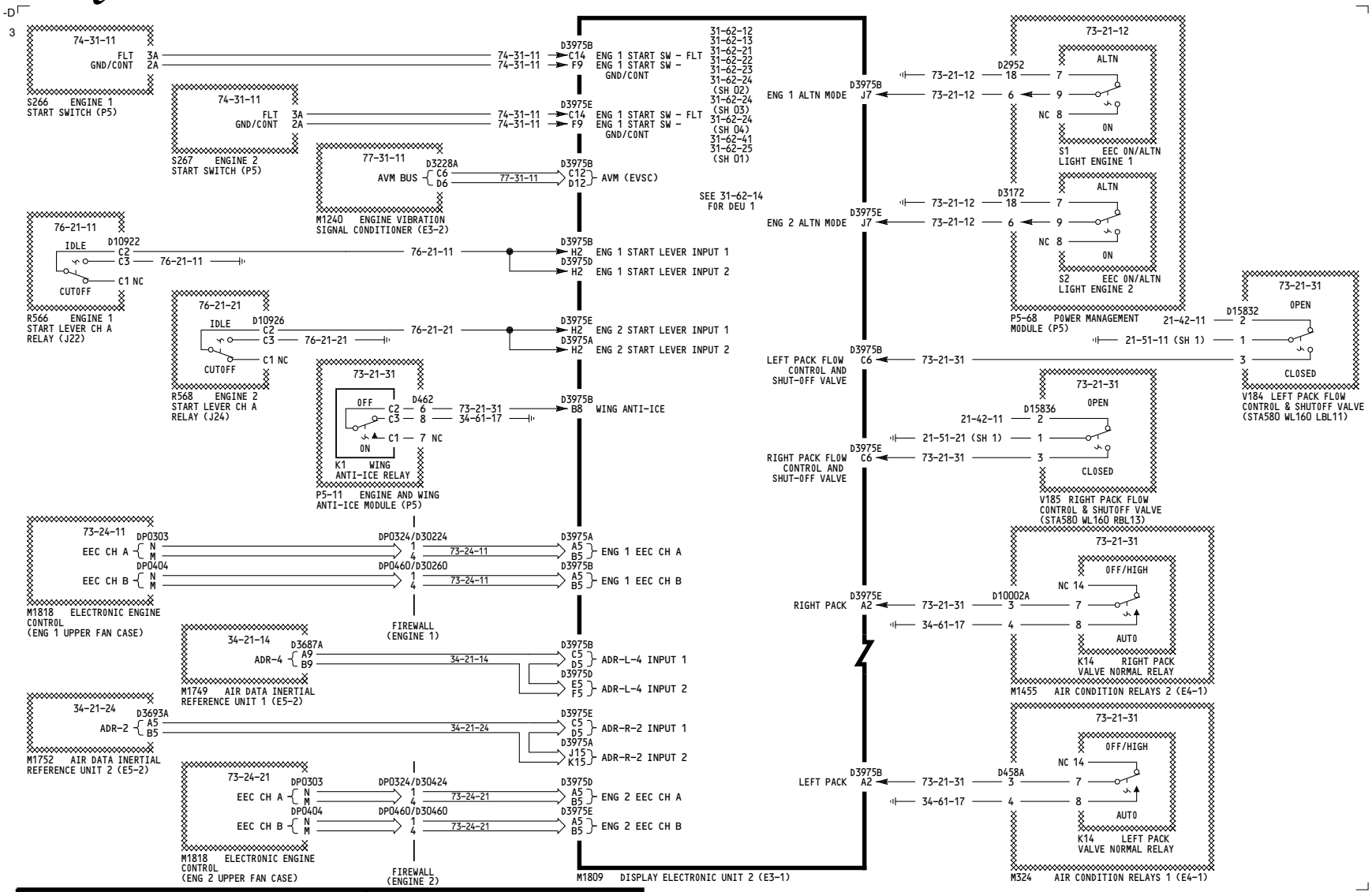

YT116-YT120, YT132-YT133

CDS - DEU 2 ENGINE HYDRAULIC, APU AND FUEL INTERFACES

D280A451

BOEING PROPRIETARY - Copyright © - Unpublished Work - See title page for details.

-M
1

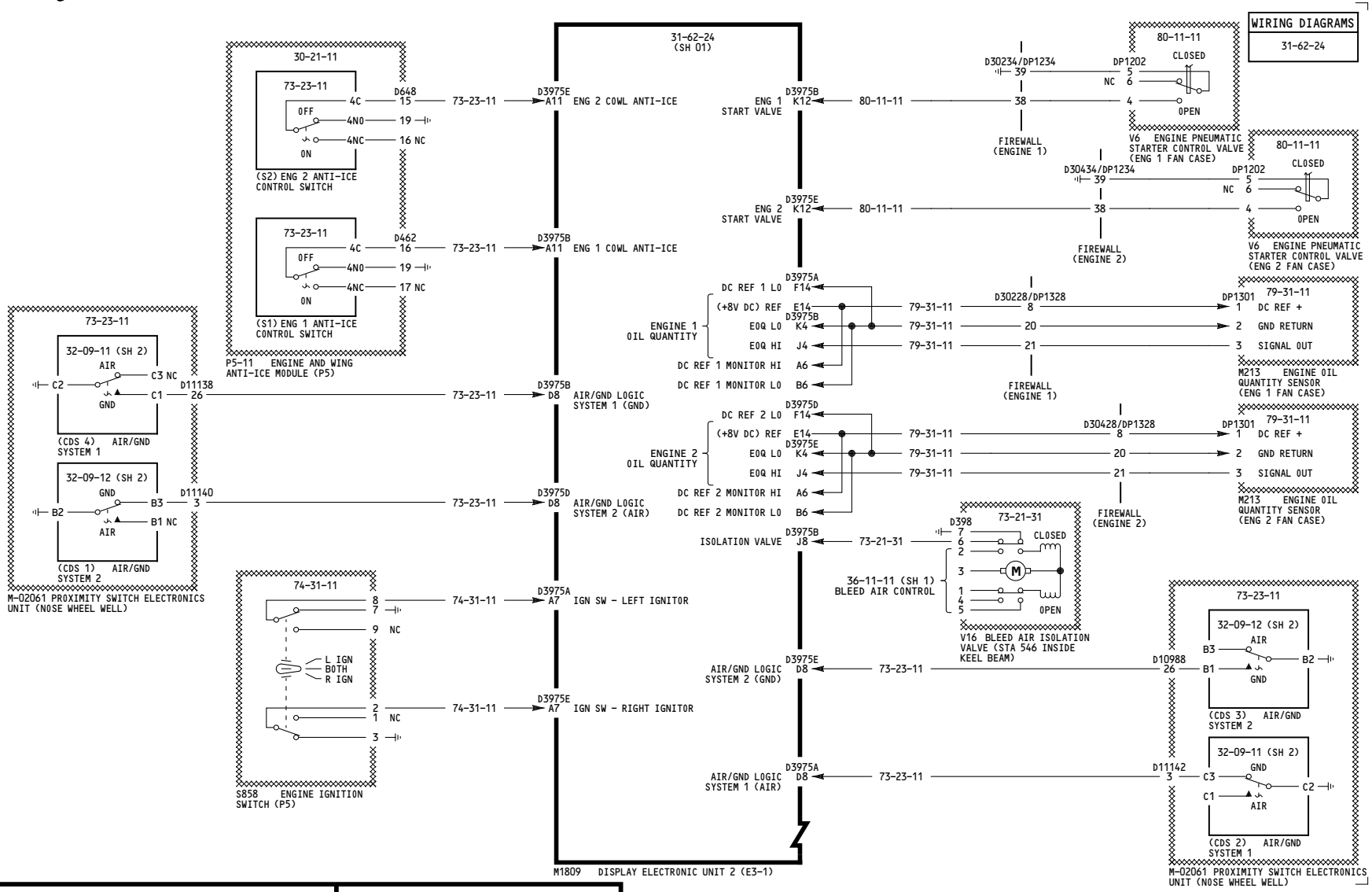

YT116-YT120, YT132-YT133

CDS - DEU 2 ENGINE HYDRAULIC, APU AND FUEL INTERFACES

D280A451

BOEING PROPRIETARY - Copyright © - Unpublished Work - See title page for details.

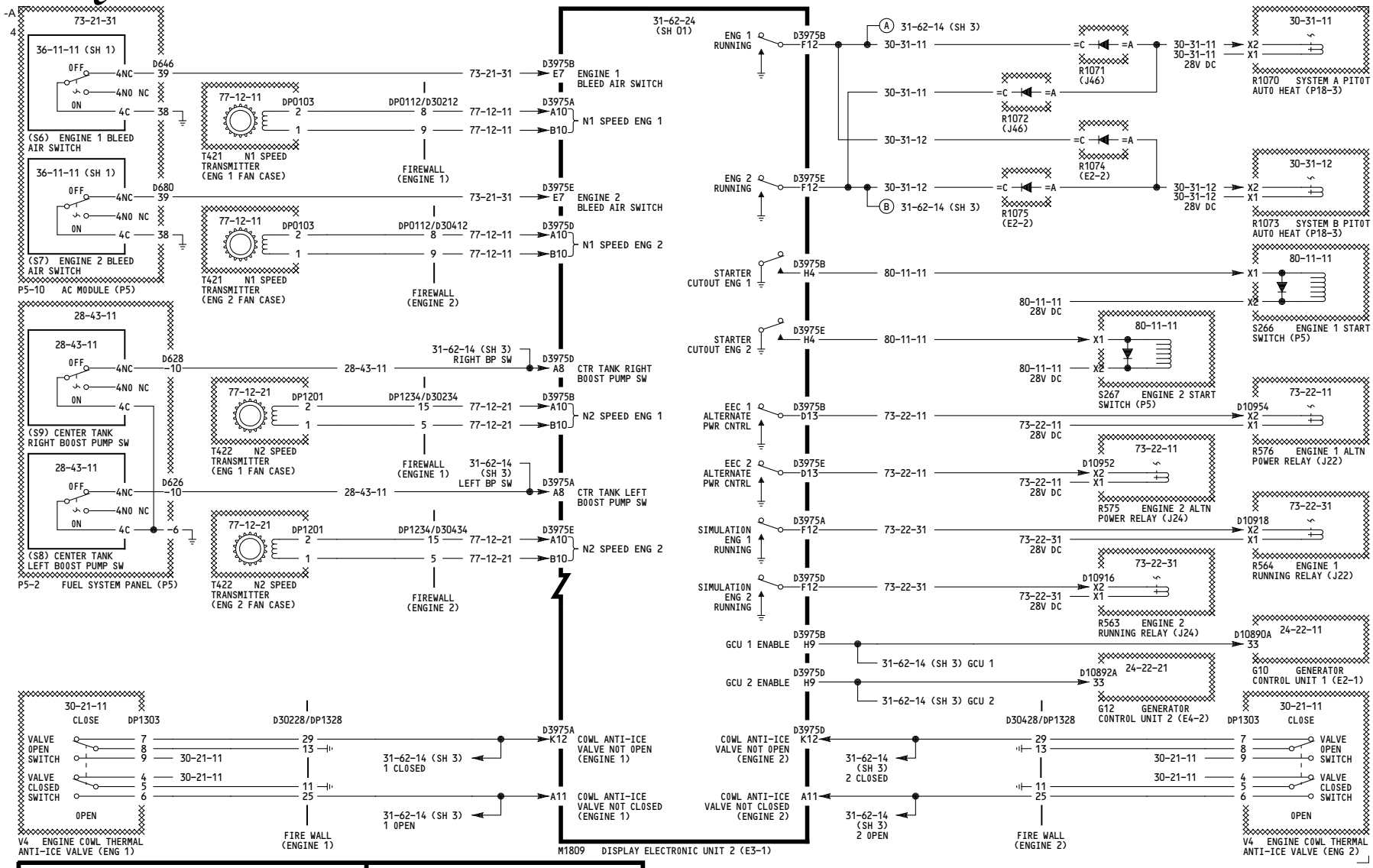

YT116-YT120, YT132-YT133

CDS - DEU 2 ENGINE HYDRAULIC, APU AND FUEL INTERFACES

D280A451

31-62-24

BOEING PROPRIETARY - Copyright © - Unpublished Work - See title page for details.

6

WIRING DIAGRAMS
31-62-24

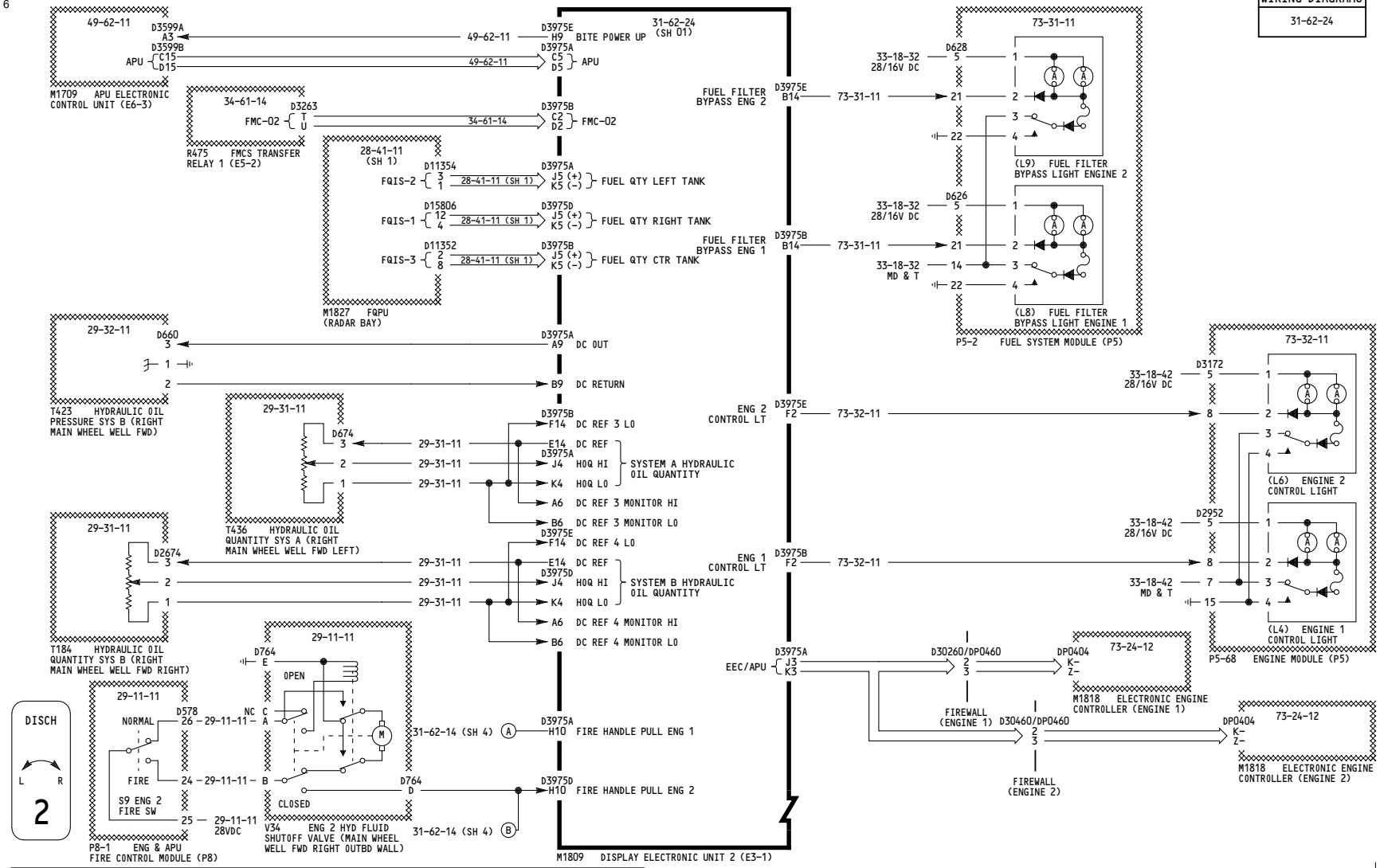

YT116-YT120, YT132-YT133

CDS - DEU 2 ENGINE HYDRAULIC, APU AND FUEL INTERFACES

D280A451

BOEING PROPRIETARY - Copyright © - Unpublished Work - See title page for details.

-B
23

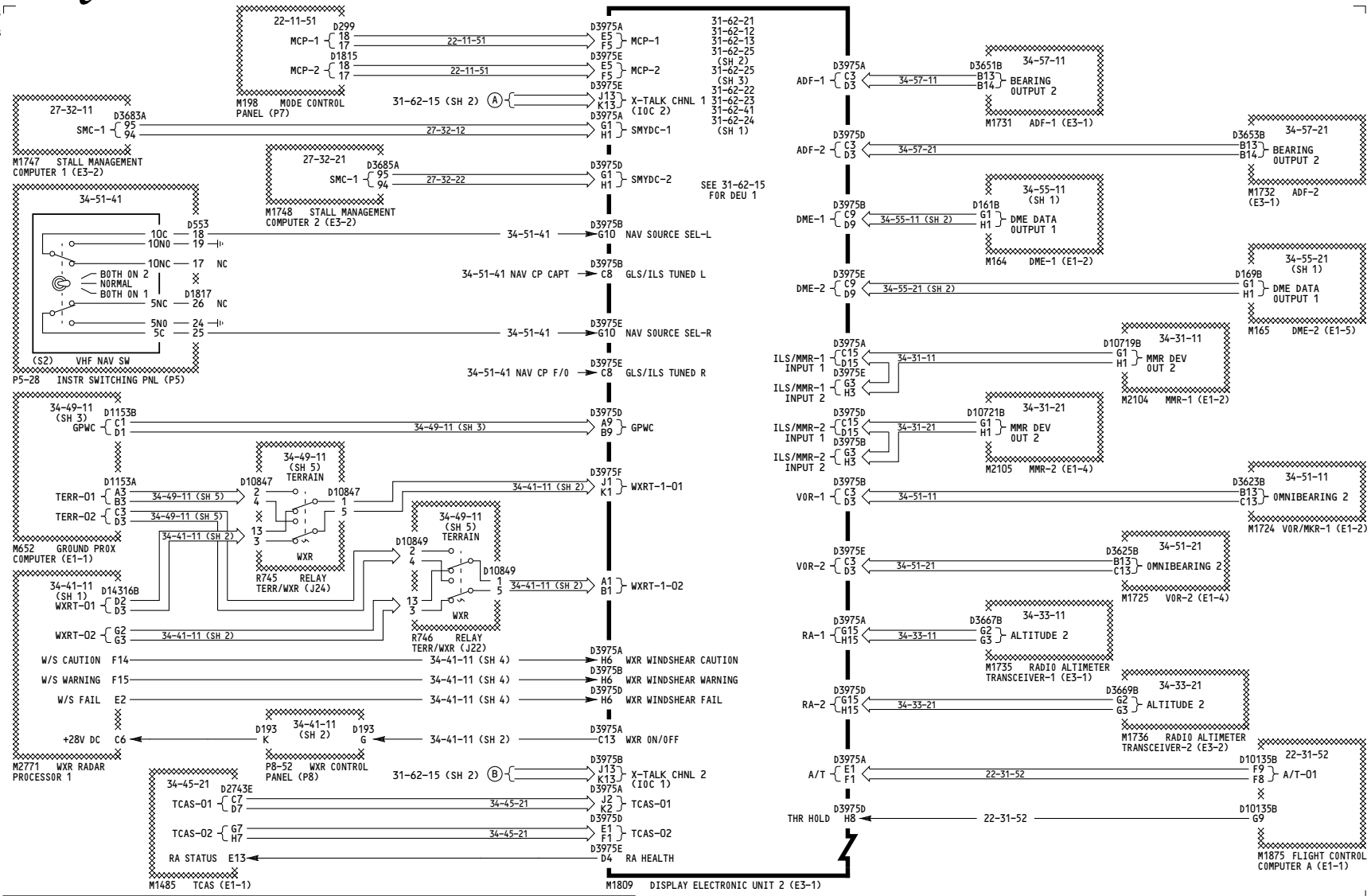

YT101-YT103

CDS - DEU 2 AVIONICS INTERFACES

D280A451

BOEING PROPRIETARY - Copyright © - Unpublished Work - See title page for details.

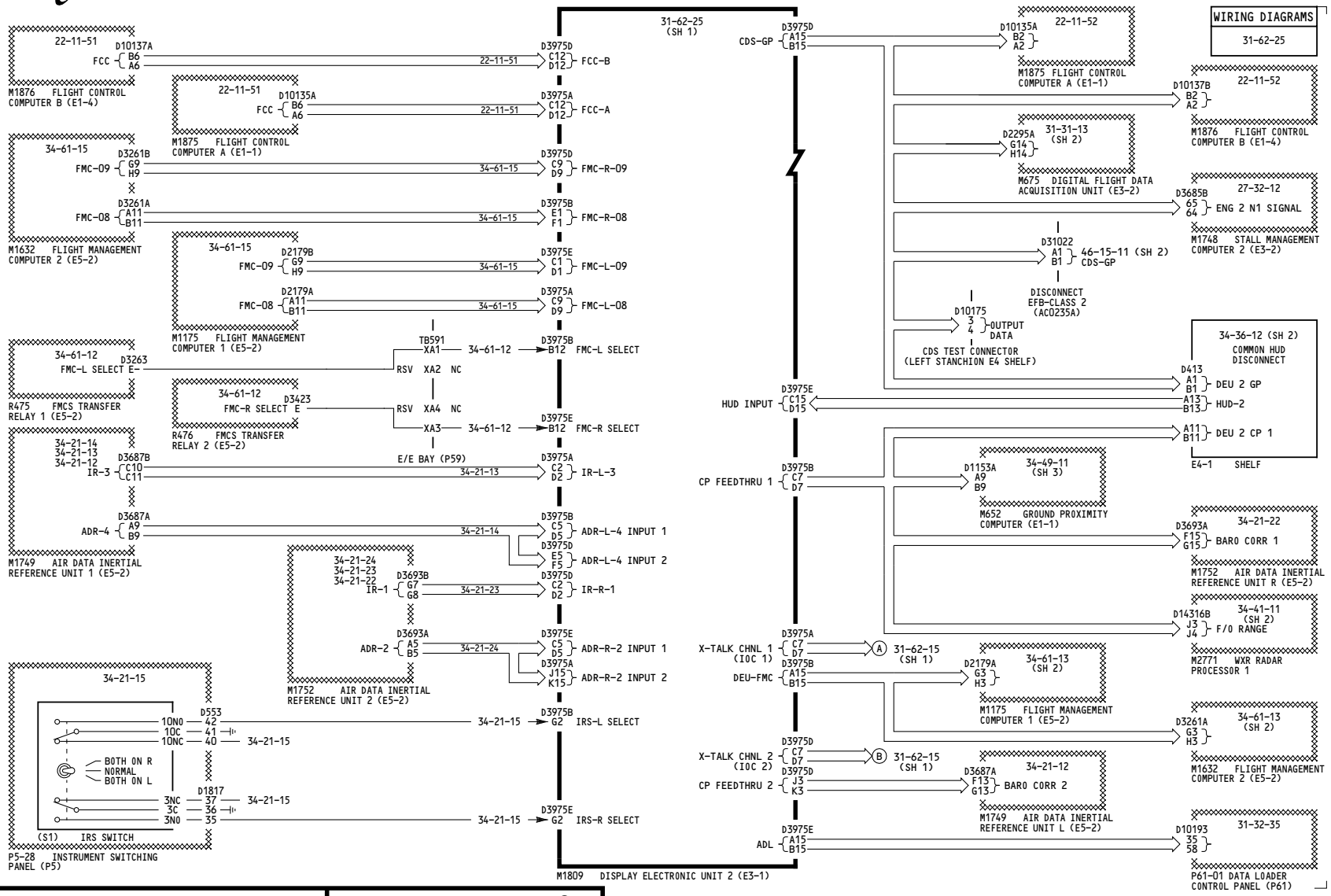

YT101-YT103

CDS - DEU 2 AVIONICS INTERFACES

D280A451

31-62-25

Page 101
Sheet 2
Aug 15/2013

BOEING PROPRIETARY - Copyright © - Unpublished Work - See title page for details.

-A
94

WIRING DIAGRAMS
31-62-25

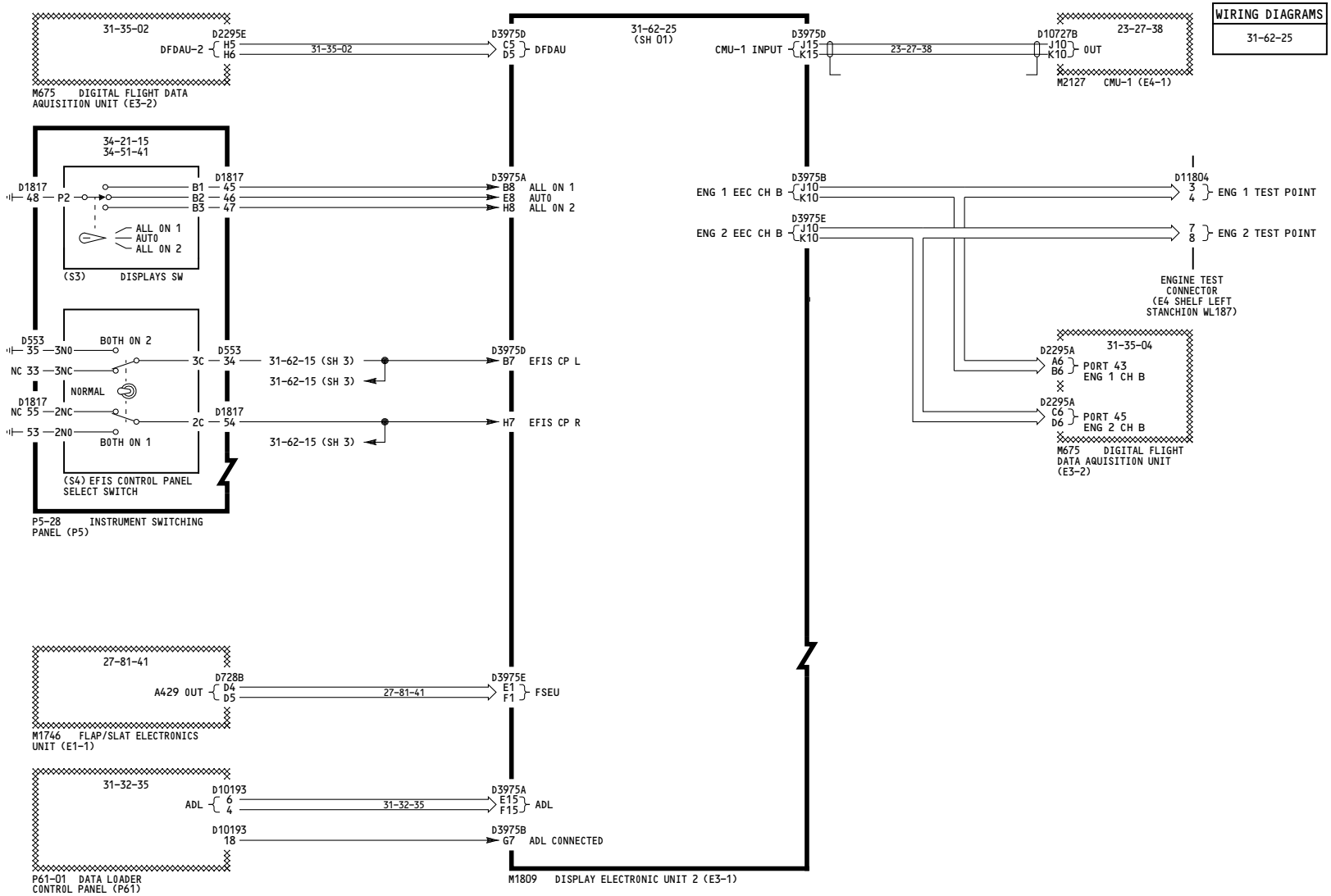

YT101-YT103

CDS - DEU 2 AVIONICS INTERFACES

D280A451

BOEING PROPRIETARY - Copyright © - Unpublished Work - See title page for details.

THIS PAGE INTENTIONALLY LEFT BLANK

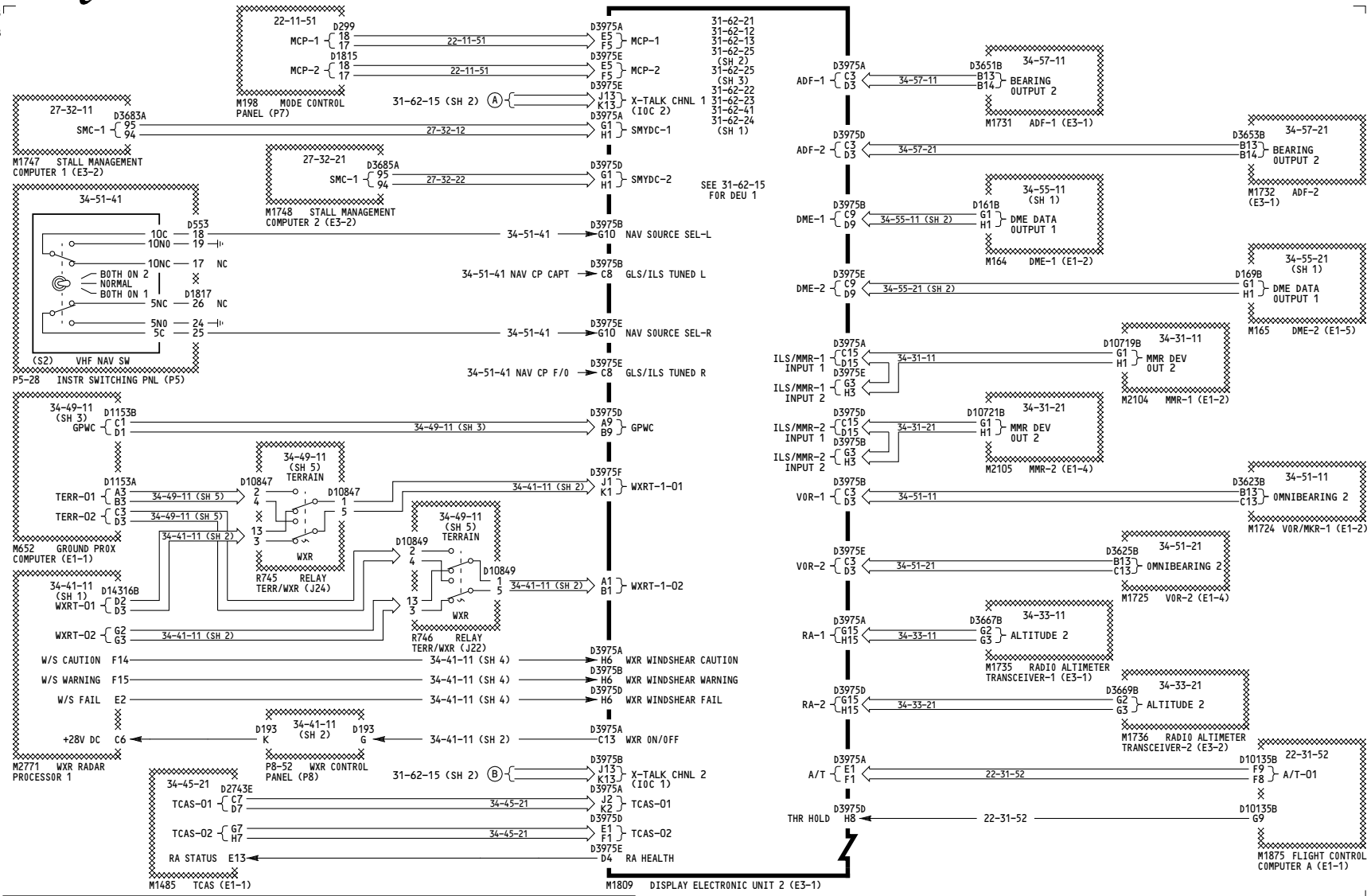

YT104-YT105

CDS - DEU 2 AVIONICS INTERFACES

D280A451

BOEING PROPRIETARY - Copyright © - Unpublished Work - See title page for details.

-A
46

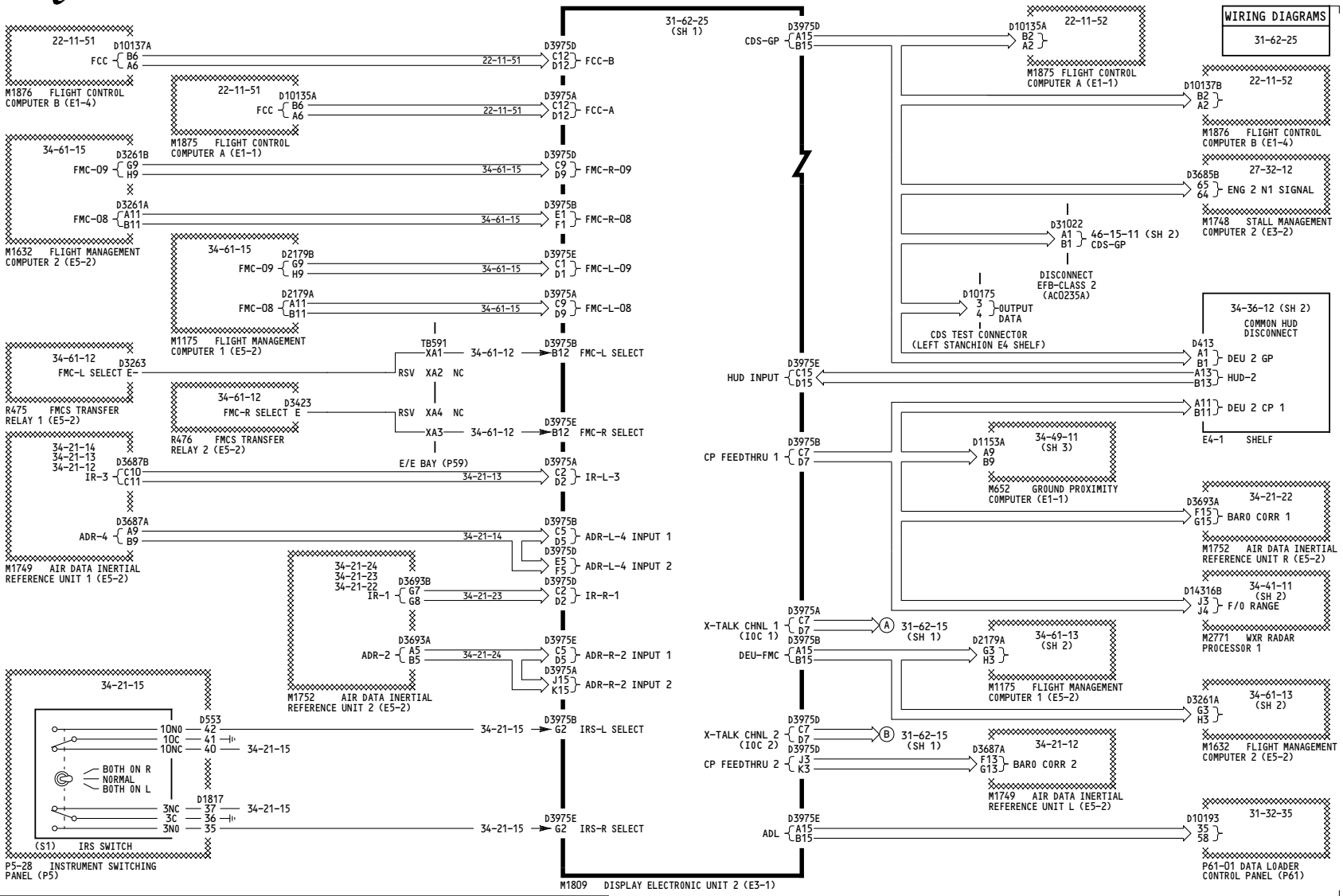

YT104-YT105

CDS - DEU 2 AVIONICS INTERFACES

D280A451

31-62-25

Page 102
Sheet 2
Apr 17/2014

BOEING PROPRIETARY - Copyright © - Unpublished Work - See title page for details.

-A
127

WIRING DIAGRAMS
31-62-25

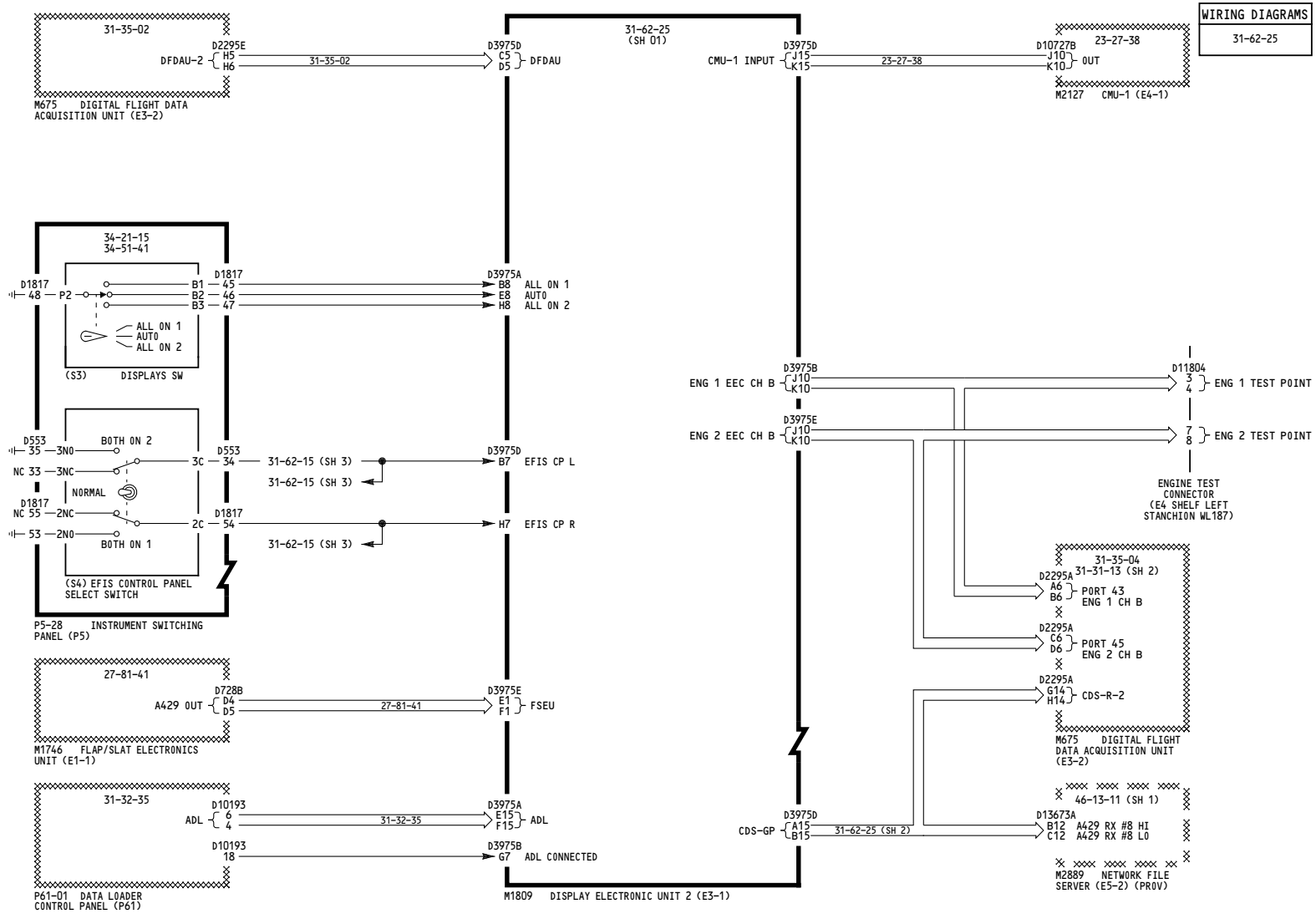

YT104-YT105

CDS - DEU 2 AVIONICS INTERFACES

D280A451

31-62-25

BOEING PROPRIETARY - Copyright © - Unpublished Work - See title page for details.

THIS PAGE INTENTIONALLY LEFT BLANK

-B
23

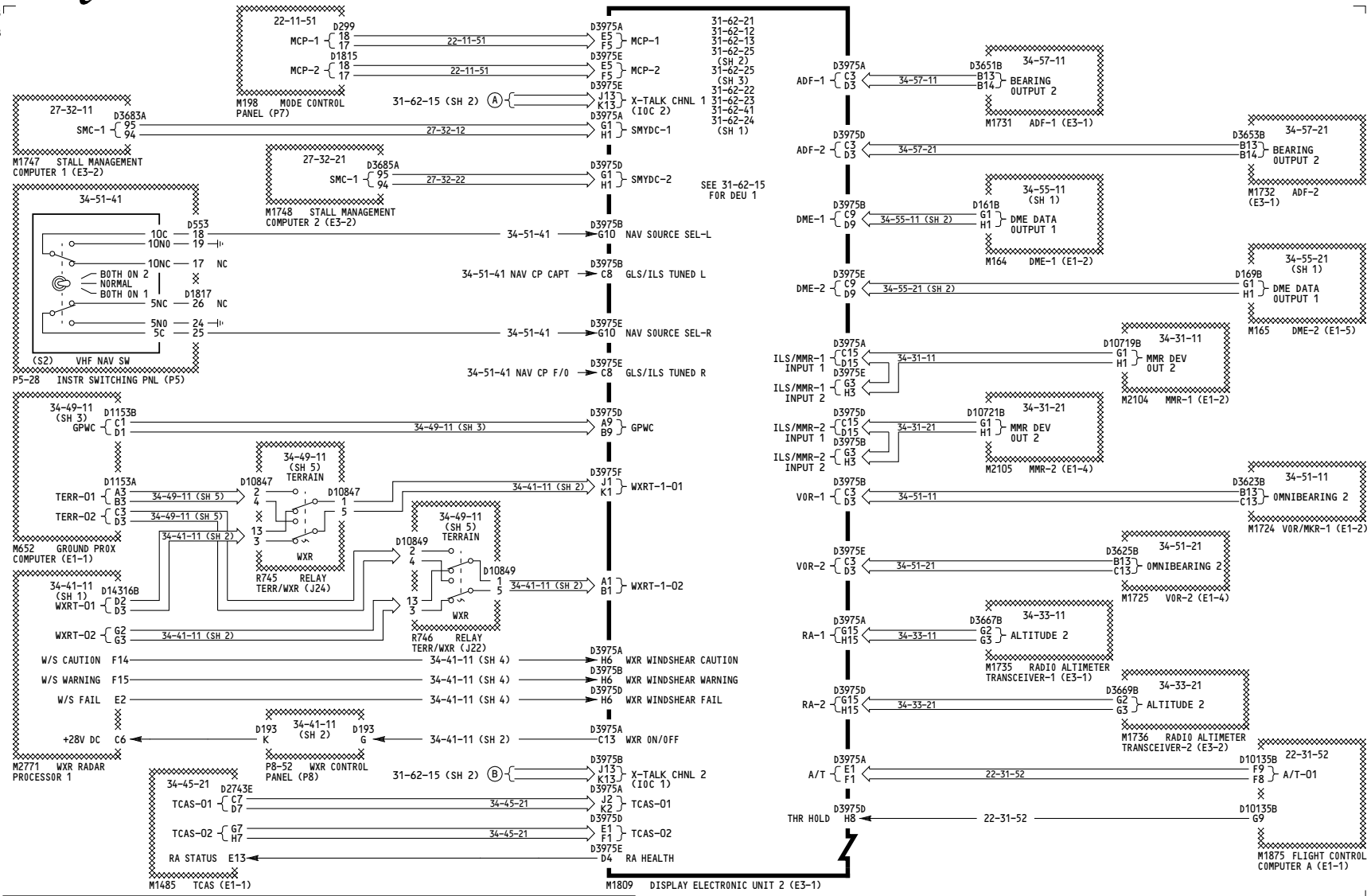

YT106-YT120

CDS - DEU 2 AVIONICS INTERFACES

D280A451

31-62-25

Page 103
Sheet 1
Mar 14/2016

BOEING PROPRIETARY - Copyright © - Unpublished Work - See title page for details.

-A
46

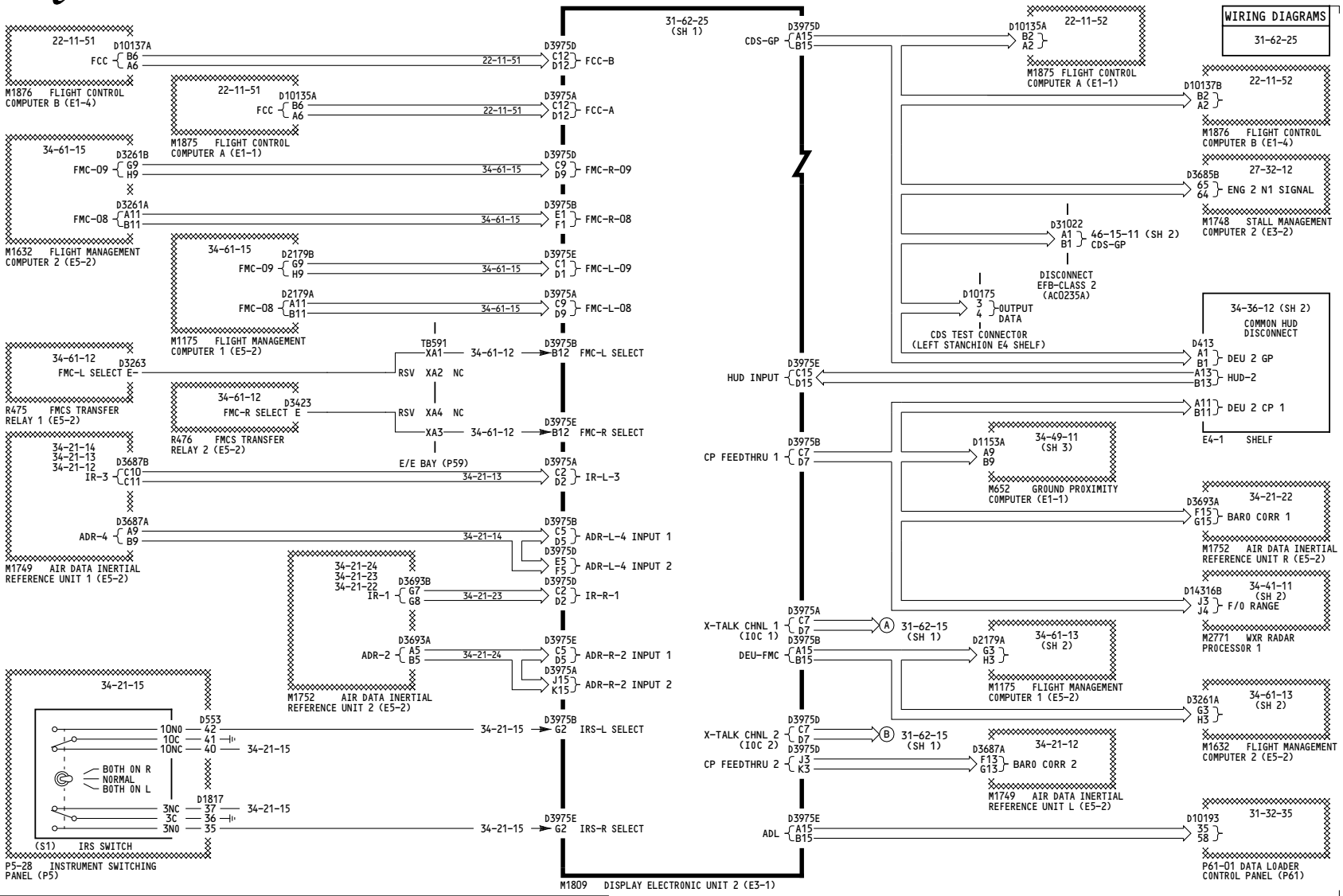

YT106-YT120

CDS - DEU 2 AVIONICS INTERFACES

D280A451

31-62-25

Page 103
Sheet 2
Mar 14/2016

BOEING PROPRIETARY - Copyright © - Unpublished Work - See title page for details.

WIRING DIAGRAMS
31-62-25

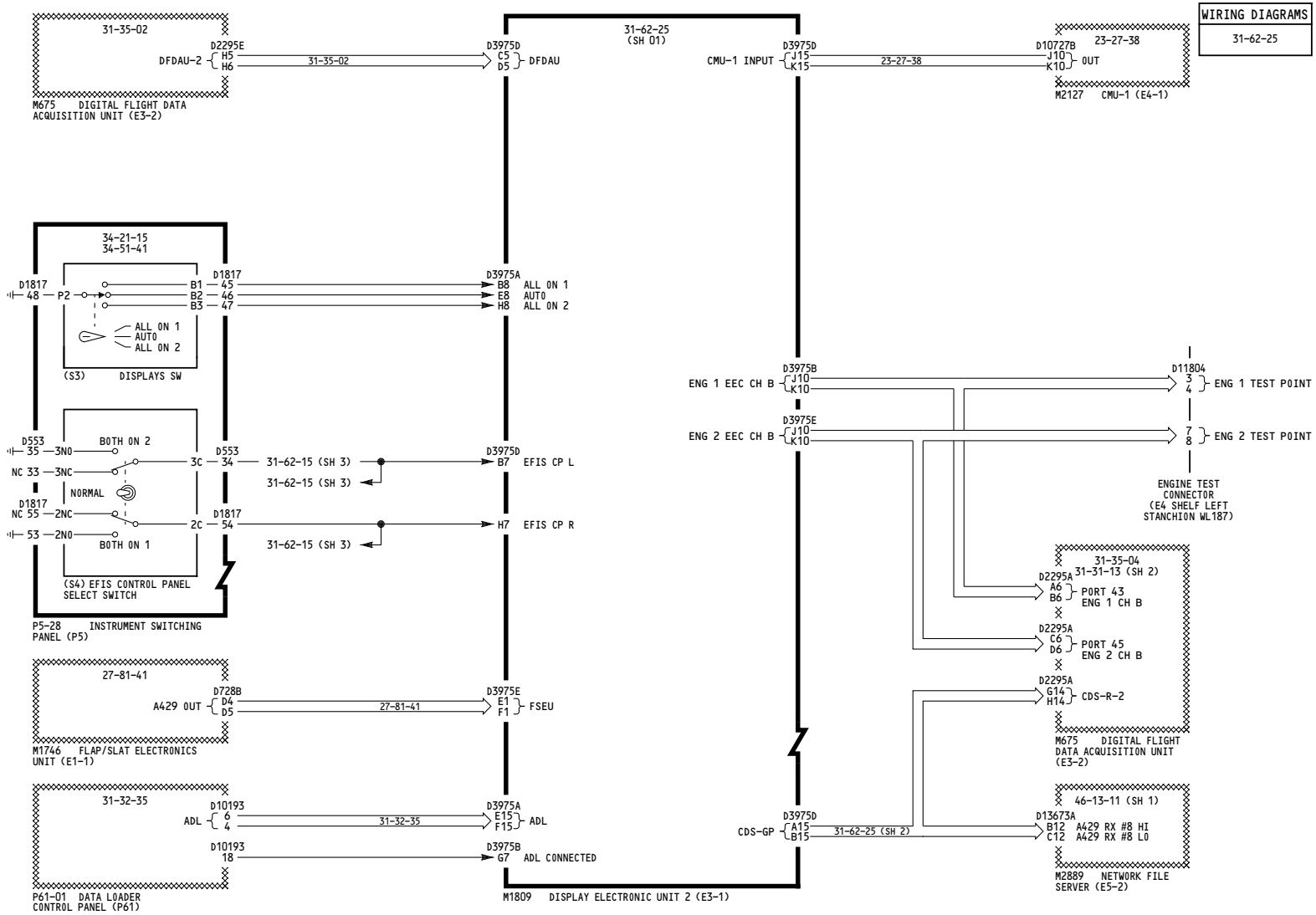

YT106-YT120

CDS - DEU 2 AVIONICS INTERFACES

D280A451

BOEING PROPRIETARY - Copyright © - Unpublished Work - See title page for details.

THIS PAGE INTENTIONALLY LEFT BLANK

-B
23

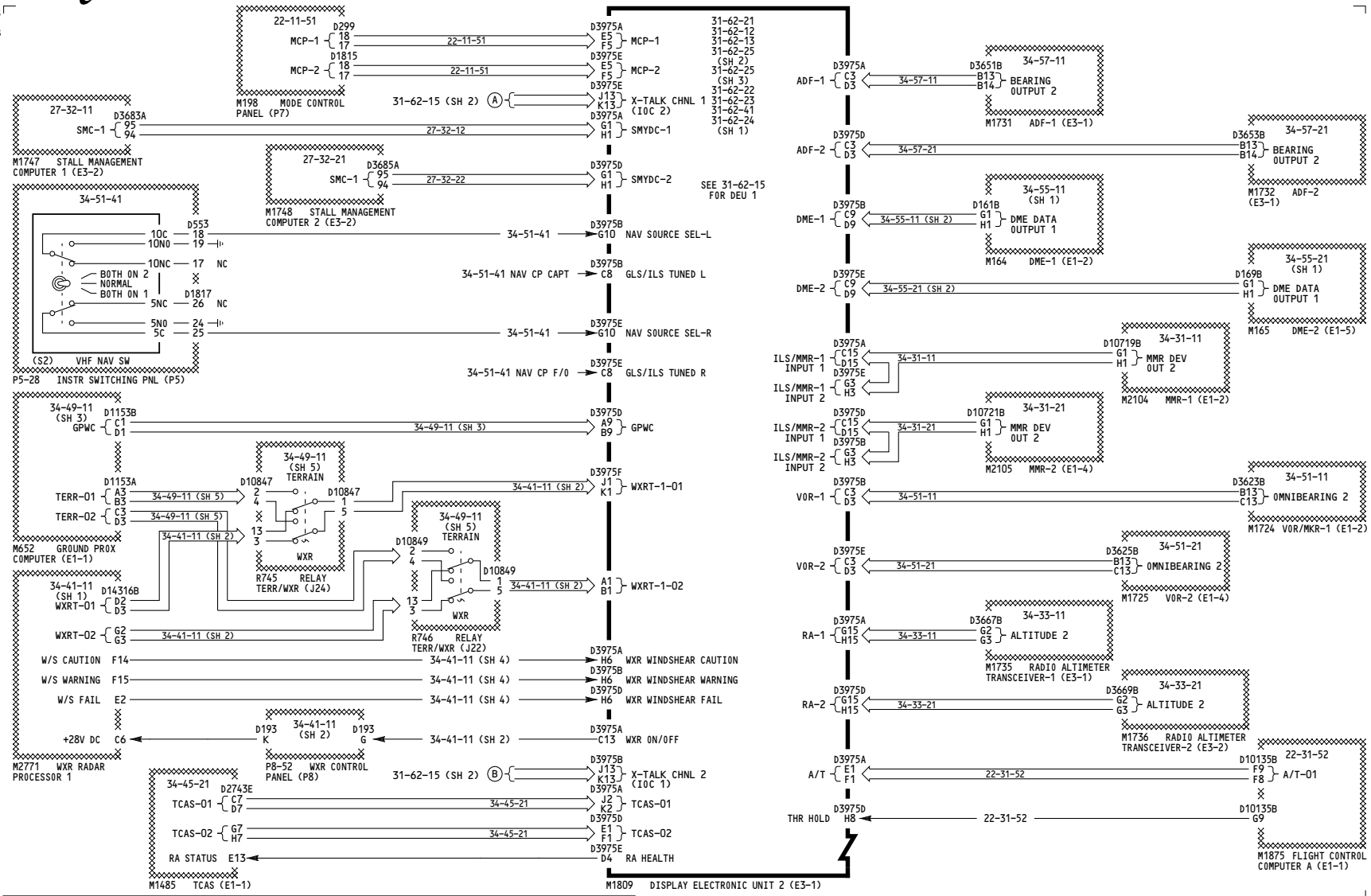

YT126-YT133

CDS - DEU 2 AVIONICS INTERFACES

D280A451

31-62-25

Page 104
Sheet 1
Jun 21/2016

BOEING PROPRIETARY - Copyright © - Unpublished Work - See title page for details.

58

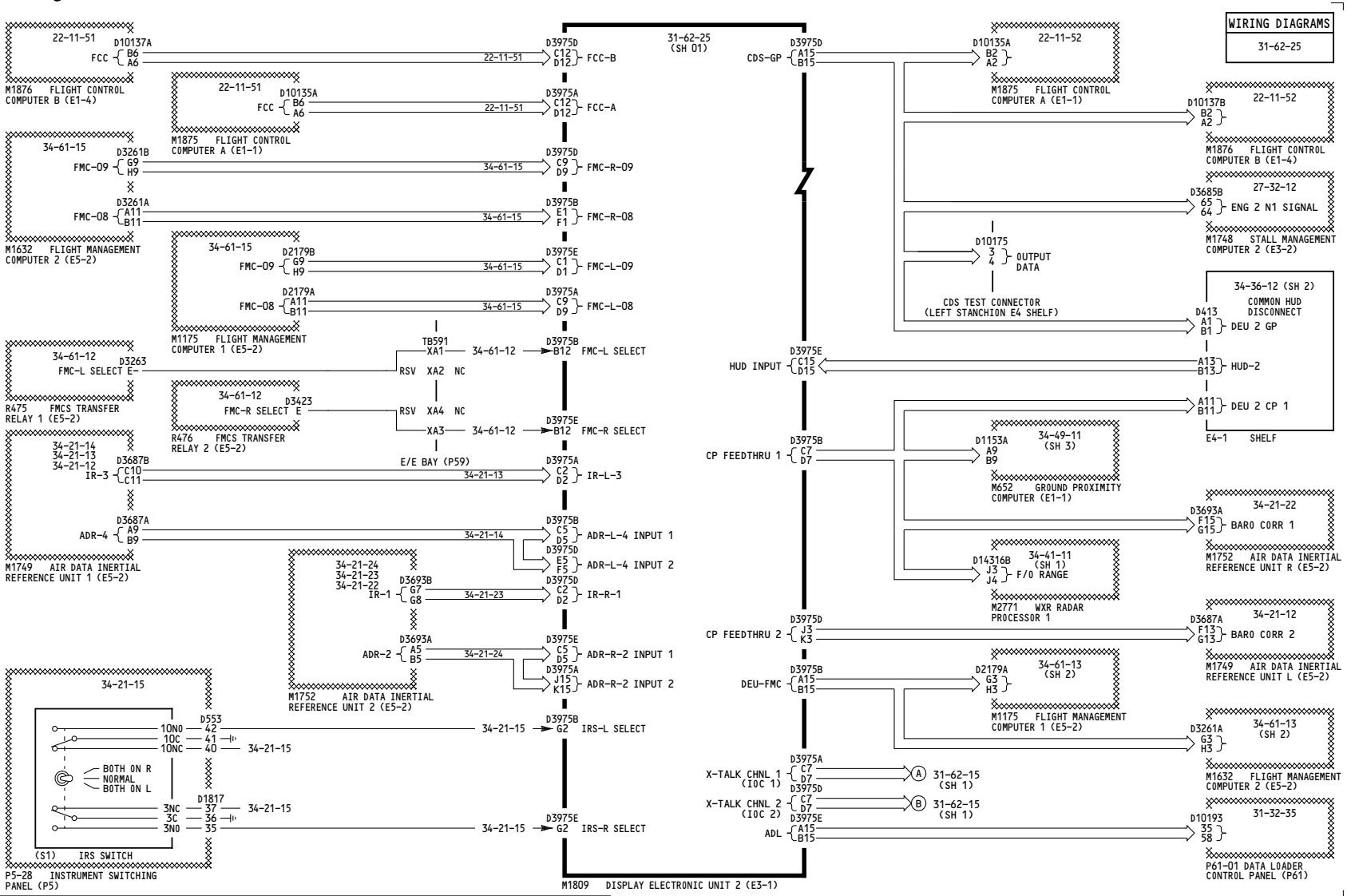

YT126-YT133

CDS - DEU 2 AVIONICS INTERFACES

D280A451

31-62-25

Page 104
Sheet 2
Jun 21/2016

BOEING PROPRIETARY - Copyright © - Unpublished Work - See title page for details.

-A
127

WIRING DIAGRAMS
31-62-25

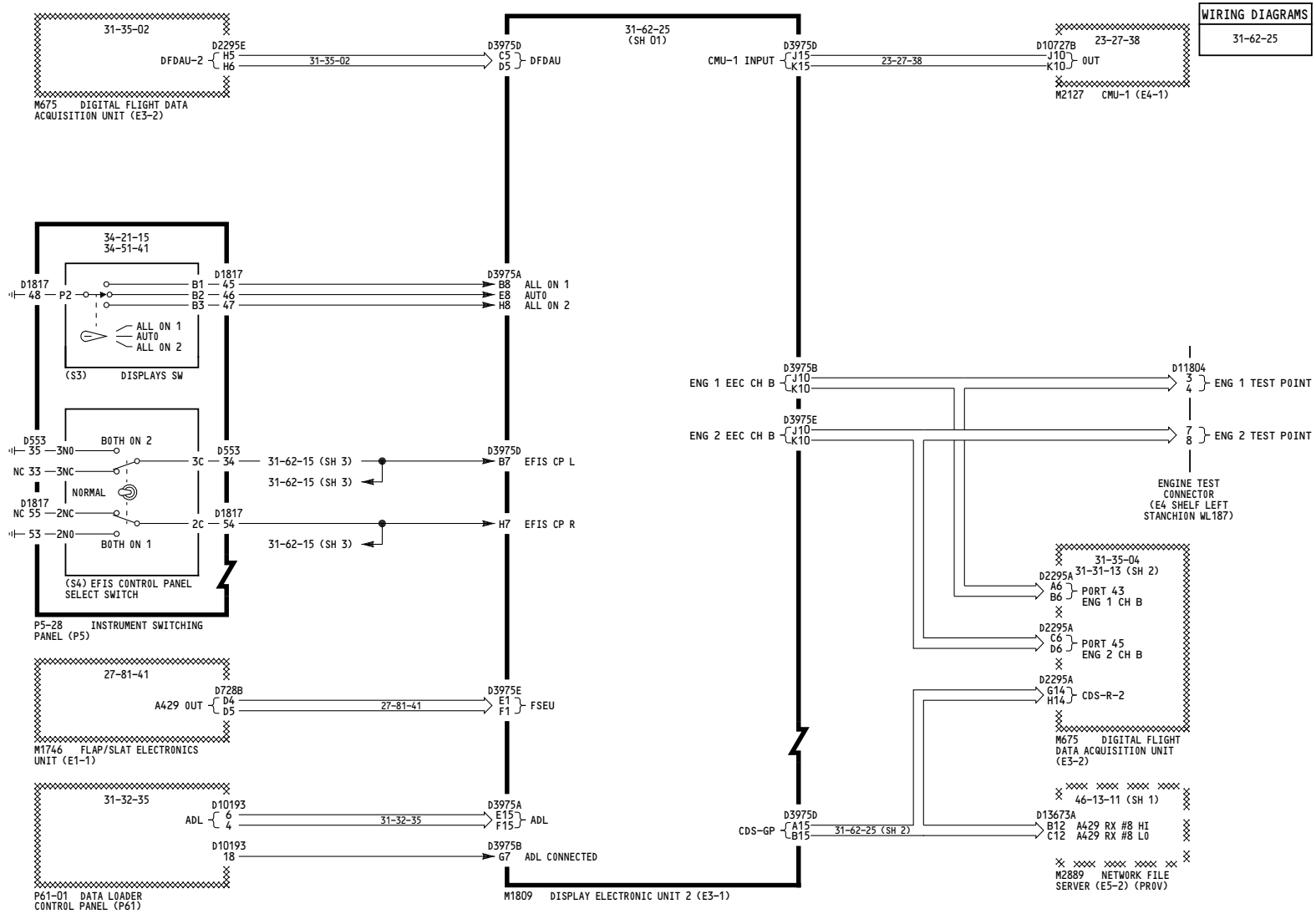

YT126-YT133

CDS - DEU 2 AVIONICS INTERFACES

D280A451

BOEING PROPRIETARY - Copyright © - Unpublished Work - See title page for details.

-B
6

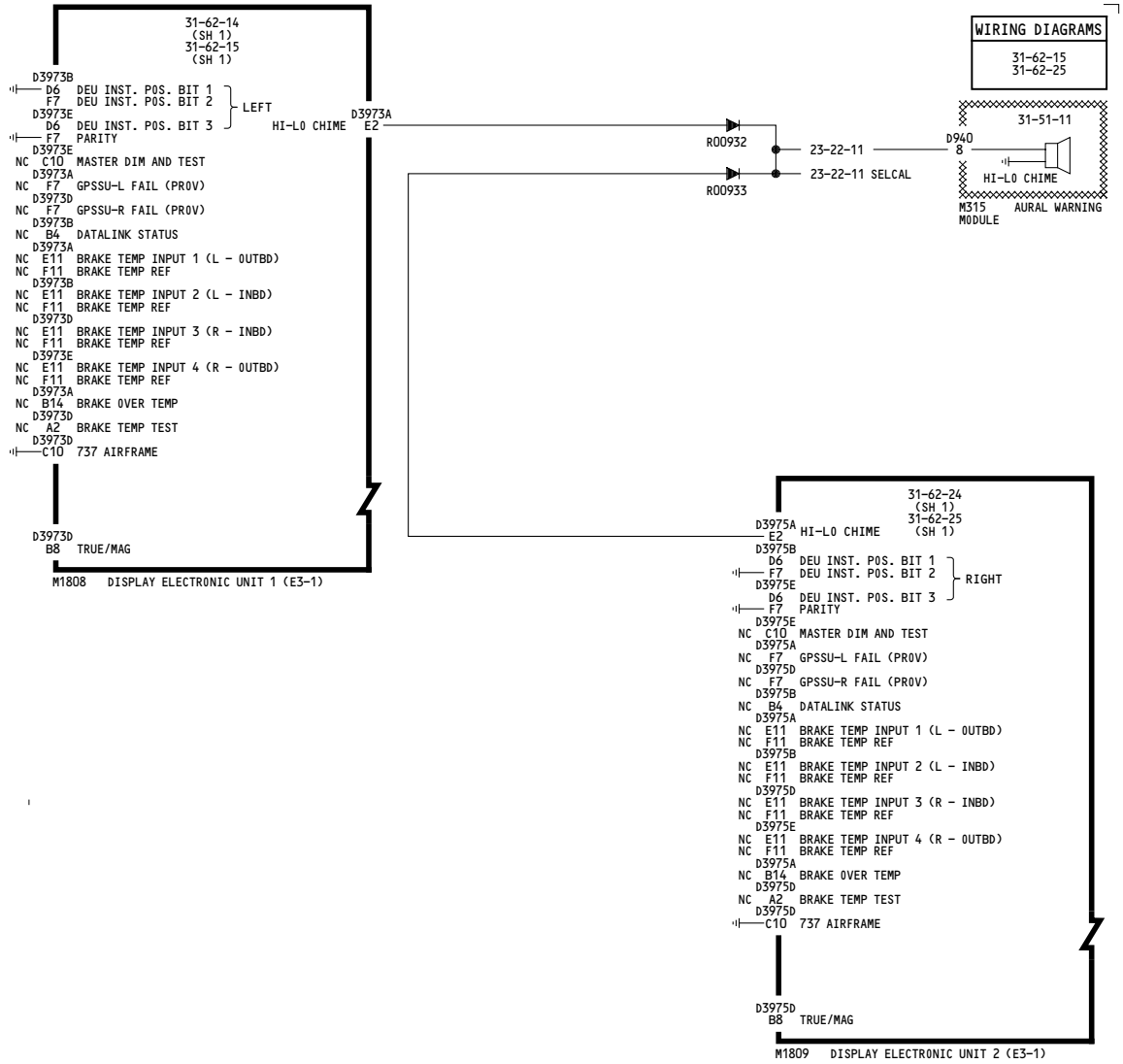

BOEING PROPRIETARY - Copyright © - Unpublished Work - See title page for details.

WIRING DIAGRAMS
31-62-12 31-62-22 31-62-42

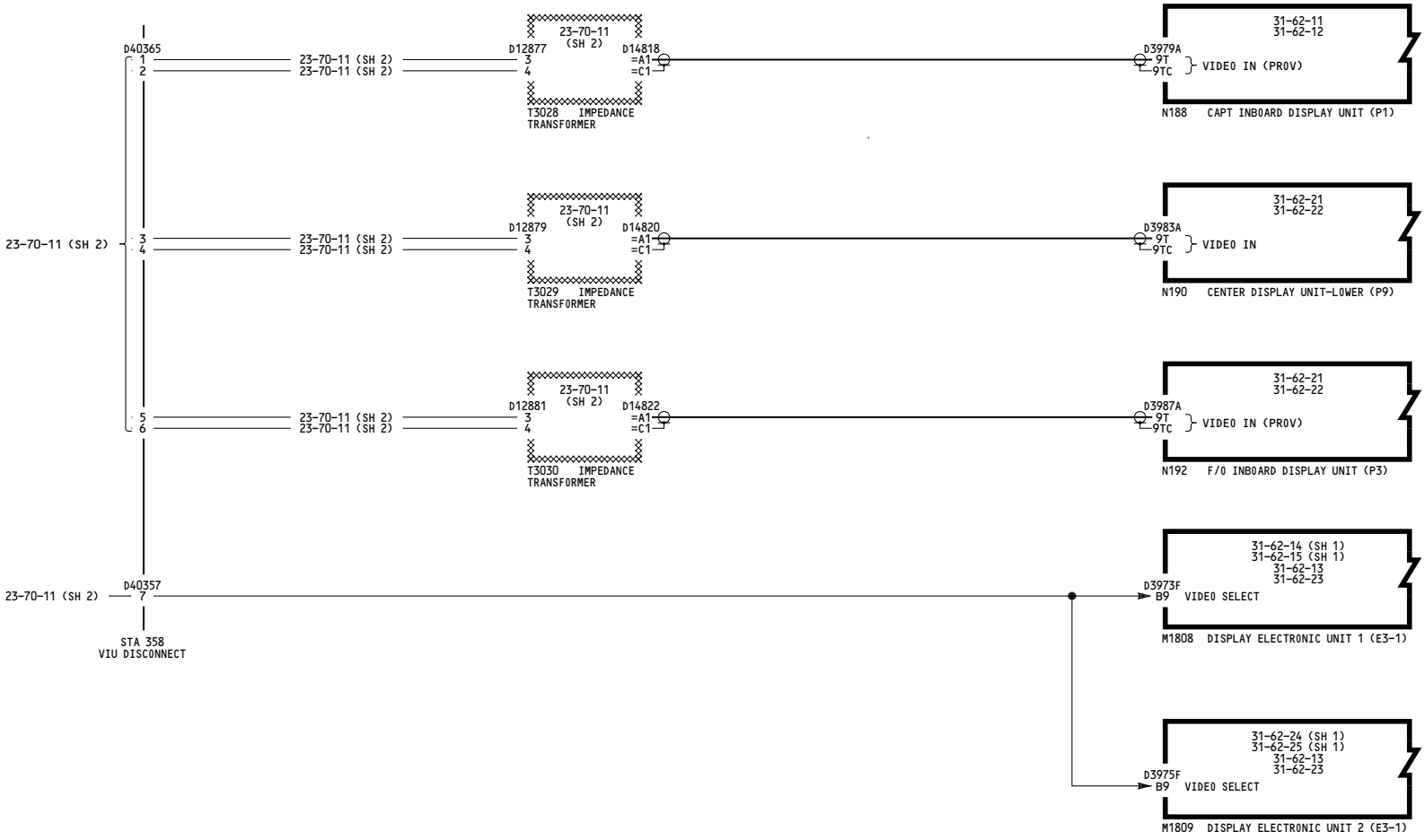

BOEING PROPRIETARY - Copyright © - Unpublished Work - See title page for details.