PART 4 - ULTRASONIC

WING - LOWER SPAR CHORD AT FSS 296

1. **Purpose**

   A. Use this ultrasonic inspection procedure to find a crack in the lower spar chord of the wing at Front Spar Station (FSS) 296. This inspection is done at the top fastener hole that is immediately behind the torque tube fitting at FSS 296.

   B. This inspection is done from the forward side of the wing spar. The transducer is put along the top edge of the lower wing spar and the sound beam is pointed at the top fastener at FSS 296 to find vertical cracks at the top of the hole. See Figure 1.

   C. 737 Supplemental Structural Inspection Document (D6-37089) Reference:

      (1) Item: W-1

2. **Equipment**

   NOTE: Refer to Part 1, 51-01-00, for data about the equipment manufacturers.

   A. Instruments

      (1) All ultrasonic instruments are permitted for use if they:

         (a) Can operate at a frequency between 4 MHz and 6 MHz. Broad band instruments can be used if they can do the calibration instructions of this procedure.

         (b) Can find the notch in the reference standard as specified in the calibration instructions of this procedure.

      (2) The instruments specified below were used to help prepare this procedure:

         (a) USN 50; Krautkramer Branson

         (b) Epoch 2002; Panametrics

         (c) Sonic 136; Staveley Instruments

   B. Ultrasonic Transducer

      (1) The transducer must cause a shear wave with an angle of 70 degrees to occur in aluminum and operate between 4 MHz and 6 MHz. The maximum length of the transducer is 0.60 inch (15 mm). The maximum width is 0.30 inch (8 mm).

      (2) The shear wave transducers specified below were used to help prepare this procedure:

         (a) Part number SUSM570AT 5 MHz, 70 degree in aluminum; NDT Engineering Corp.

         (b) Part number XAB-6028 5 MHz, 70 degree in aluminum; Xactex Corp.

   C. Reference standards - Make reference standard NDT3030 as specified in Figure 2.

   D. Ultrasonic Couplant - Use oil, grease or an equivalent couplant that will not damage the part.

3. **Prepare for the Inspection**

   A. Remove the lower access panel at FSS 296 to get access to the inspection area on the lower chord.

   B. If necessary, loosen the brackets that hold down the hydraulic lines and move the hydraulic lines away from the inspection area. Figure 1 shows the transducer position on the lower chord (immediately outboard of the support fitting for the torque tube).

   C. Make sure the paint in the transducer scan area is clean, smooth and in good condition. Paint that is not smooth or in good condition will not transmit sufficient sound in the lower chord.

BOEING PROPRIETARY - Copyright © Unpublished Work - See title page for details

4. **Instrument Calibration**

NOTE: Refer to the instrument instruction manual for the instrument operation instructions.

A. Set the instrument frequency between 4 MHz and 6 MHz.

NOTE: No frequency adjustment is necessary for the USN 50 instrument. To minimize noise from the transducer, set the pulser to “Low”.

NOTE: Do not use reject.

B. Put sufficient couplant on reference standard NDT3030 where transducer positions 1 and 2 are shown. See Figure 3.

C. Put the transducer at position 1 on reference standard NDT3030 so it points at the fastener hole as shown in Figure 3. Make sure the front of the transducer is against the edge of the top layer as shown.

D. Adjust the range and delay controls so that the front edge of the signal from the fastener hole occurs at 70 percent of full screen width. Make sure that the initial pulse stays at 0 percent of full screen width. See Detail 1 in Figure 3.

E. Slowly turn the transducer to the right so the signal from the notch is at a maximum height. See Detail 2 in Figure 3.

F. Adjust the gain so the signal from the notch is at 90 percent of full screen height.

5. **Inspection Procedure**

A. Calibrate the equipment as specified in Paragraph 4.

B. Apply sufficient couplant to the transducer scan area on the lower chord of the front spar that is shown in Figure 1. The transducer scan area is above the fastener head immediately outboard of the support fitting for the torque tube.

C. Put the transducer on the lower chord immediately above the fastener head shown in Figure 1.

D. Point the transducer at the fastener head on the support fitting. If necessary slowly turn the transducer left and right until a signal from the fastener hole shows on the screen.

E. If the fastener hole does not show on the screen, increase the gain until the hole signal is at 20 percent of full screen height on the screen.

F. Slowly turn the transducer so it is parallel to the edge of the chord. See Figure 1. As the transducer is turned, the hole signal will decrease. Look for a possible crack signal that could occur immediately to the right of the hole signal. If there is not a crack at the hole, no signal will occur immediately to the right of the hole signal.

G. Move the transducer away from the support fitting (approximately 0.50 inch (13 mm)) and back again to the support fitting. Monitor the screen display for signals as you move the transducer. Make sure the transducer is against the top edge of the fastener and parallel to the chord edge as shown in Figure 1.

H. Do the steps in Paragraph 5.A. thru Paragraph 5.G. on the other side of the airplane.

6. **Inspection Results**

A. Signals that are 30 percent of full screen height or higher that are to the right of the fastener hole signal are crack indications.

B. Turn the transducer to the right and left to see the signals increase and decrease to make sure the crack signal is adjacent to the fastener hole. Refer to how the hole signal and notch signal increased and decreased as the transducer was turned during calibration.

BOEING PROPRIETARY - Copyright © Unpublished Work - See title page for details

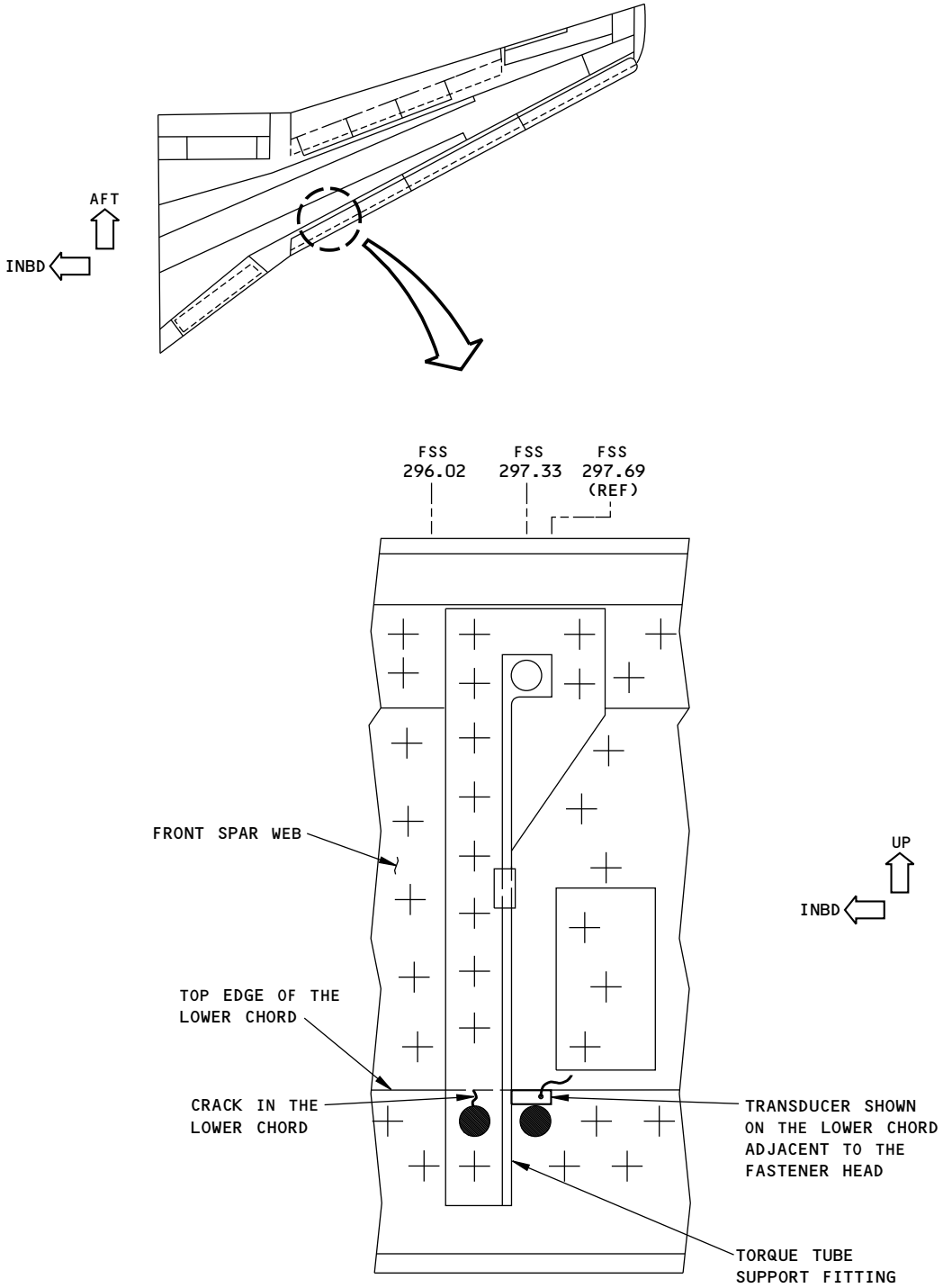

2158706 S0000471534_V1

Inspection Area on the Lower Chord of the Front Spar
Figure 1

BOEING PROPRIETARY - Copyright © Unpublished Work - See title page for details

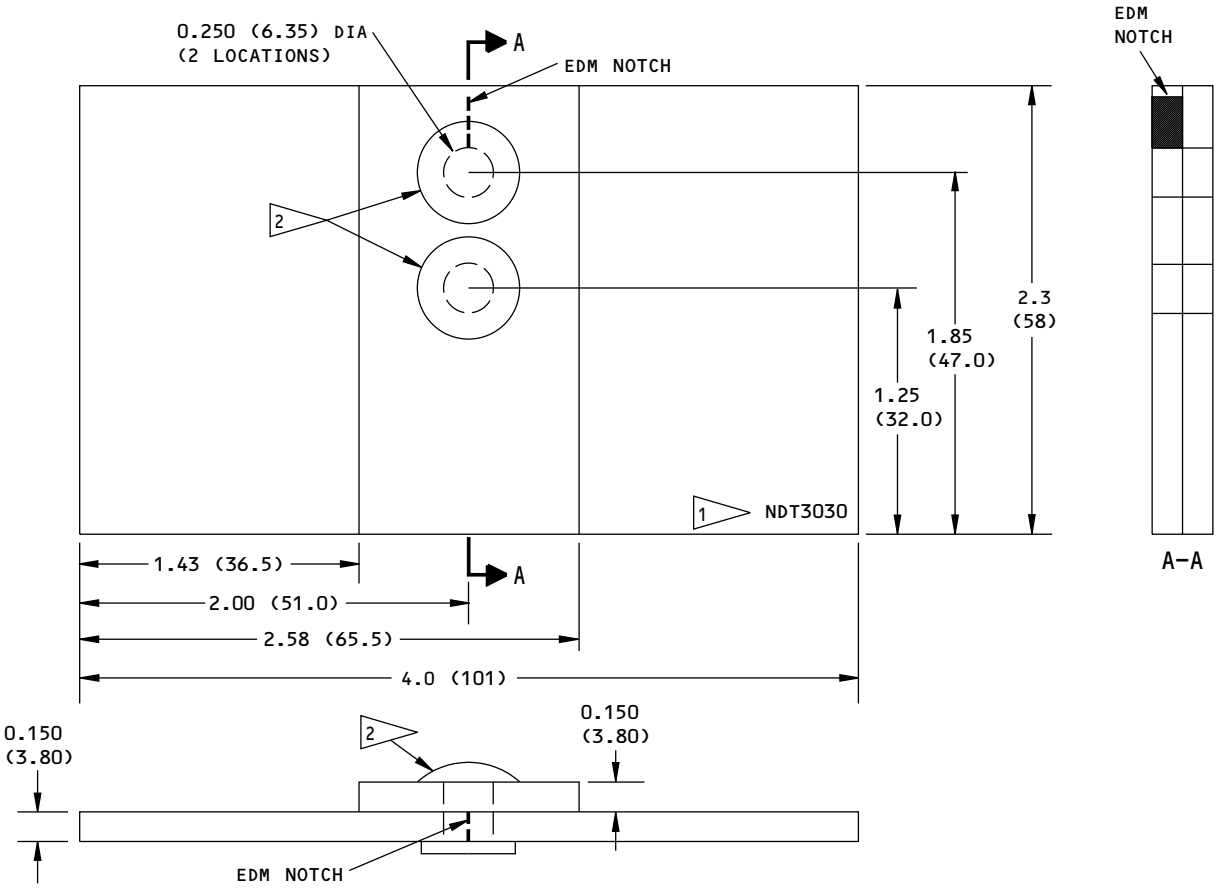

NOTES:

- ALL DIMENSIONS ARE IN INCHES
  (MILLIMETERS ARE IN PARENTHESES)
- TOLERANCE (UNLESS SPECIFIED DIFFERENTLY):

INCHES	MILLIMETERS
X.XXX = ±0.005	X.XX = ±0.1
X.XX = ±0.025	X.X = ±0.5
X.X = ±0.050	X = ±1

- MATERIAL:
  EACH LAYER IS 2024-T3 OR 7075-T6 CLAD
  ALUMINUM ALLOY
- EDM NOTCH: LENGTH 0.250 (6.4)
  DEPTH 0.150 (3.8)
  MAXIMUM WIDTH IS 0.02 (0.5)

1 STAMP OR ETCH NDT3030

2 RIVETS: BACR15BB8*9
(* = CODE D OR AD)

2158708 S0000471535_V1

Reference Standard NDT3030
Figure 2

BOEING PROPRIETARY - Copyright © Unpublished Work - See title page for details

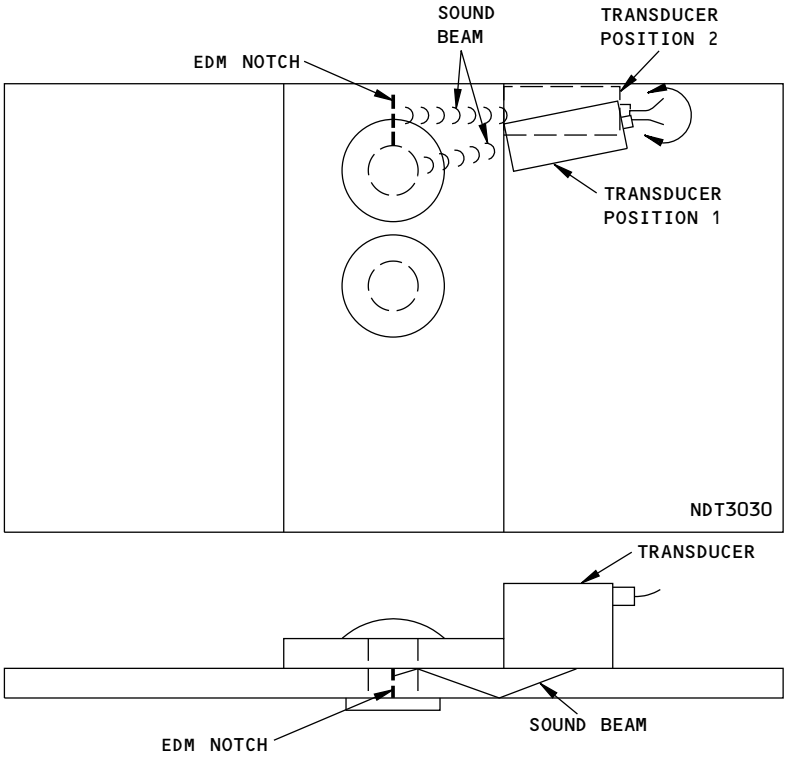

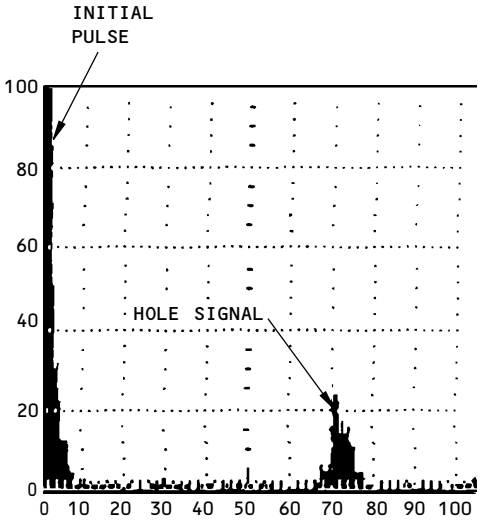

DETAIL 1

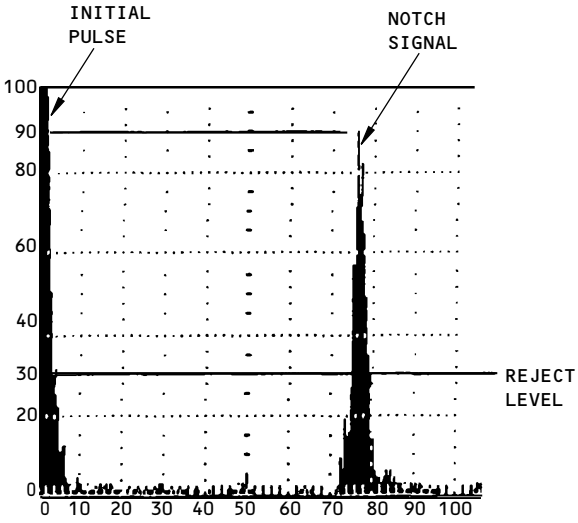

DETAIL 2

2158710 S0000471536_V1

Instrument Calibration
Figure 3

BOEING PROPRIETARY - Copyright © Unpublished Work - See title page for details

PART 4 - ULTRASONIC

WING - LOWER WING STRINGER S-5 AT WBL 191

1. Purpose

A. Use this ultrasonic inspection procedure to find cracks in the aft flange of lower wing stringer 5 at WBL 191 (the stub beam location). A 45 degree shear wave transducer is used to find cracks that are in an aft to forward direction in S-5 where the stub beam is attached to S-5. See Figure 1 for the inspection locations.

B. Access to the inspection area is through the access panel in the top wing skin that is just above and immediately aft of the stub beam fitting. See Figure 1 for access to the inspection area. Alternative access to the inspection area is through the lower wing skin panel immediately inboard of WBL 183.4. The aft rib web access panel at WBL 183.4 is then removed to get access to the aft flange of S-5 on each side of the stub beam fitting.

C. 737 Supplemental Structural Inspection Document (D6-37089) Reference:

(1) Item: W-27D

2. Equipment

NOTE: Refer to Part 1, 51-01-00, for data about the equipment manufacturers.

A. Instruments

(1) All ultrasonic instruments are permitted for use if they:

(a) Can operate at a frequency between 4 MHz and 6 MHz. Broad band instruments can be used if they can do the calibration instructions of this procedure.

(b) Can find the simulated crack in the reference standard as specified in the calibration instructions of this procedure.

(2) The instruments that follow were used to help prepare this procedure.

(a) USN 50; Krautkramer Branson

(b) Epoch 2002; Panametrics

(c) Sonic 136; Staveley Instruments

B. Ultrasonic Transducer

(1) Use a 5 MHz transducer with a top mounted connector that puts a 45 degree shear wave in aluminum. The case dimensions must not be more than 0.60 inch (15.2 mm) in length by 0.26 inch (6.6 mm) in width.

(2) The shear wave transducers that follow were used to help prepare this procedure.

(a) XAB-6084; Xactex Corp.

(b) SUSM 545AT; Olympus NDT (NDT Engineering)

(c) SA-455T; Techna NDT

C. Reference standards - Make reference standard NDT3062 as specified in Figure 2.

D. Ultrasonic Couplant - Use oil, grease or an equivalent couplant that will not damage the part.

BOEING PROPRIETARY - Copyright © Unpublished Work - See title page for details

3. **Prepare for the Inspection**

WARNING: PRECAUTIONS AND SAFETY PROCEDURES CONTAINED IN CHAPTER 28 OF THE MAINTENANCE MANUAL MUST BE DONE BY PERSONNEL WHO GO INTO A FUEL TANK THAT HAS CONTAINED FUEL. AN EXPLOSION IS POSSIBLE AND THE AIR CAN BE POISONOUS IN FUEL TANKS THAT HAVE CONTAINED FUEL.

NOTE: There are two different access directions to the inspection area. You can use one of the two access directions specified below.

A. Do Paragraph 3.A.(1) or Paragraph 3.A.(2) that follow to get access to the inspection area on the aft side of lower wing stringer 5 and the stub beam at WBL 191.

(1) Get access through the access panel on the upper wing skin as follows:

(a) Remove the access panel on the upper wing skin that is at WBL 191 and immediately aft of lower stringer 5. See Figure 1, Sheet 1.

(b) Reach down and forward and clean the aft flange of stringer 5 on each side of the stub beam where the transducer will touch the stringer. See Figure 1, Sheet 1.

(c) Make sure the paint on the transducer scan area is clean, smooth and in good condition. Paint that is not smooth and not in good condition will not transmit sufficient sound in the stringer flange. See Figure 1, Sheet 1 to see the transducer scan areas.

(2) Get access through the access panel on the lower wing skin as follows:

(a) Remove the lower wing skin access panel that is immediately inboard of the wing rib at WBL 183.4. This lower wing skin access panel is immediately inboard of the pylon fairing. See Figure 1, Sheet 2.

(b) Go aft in the wing and remove the aft rib access panel at WBL 183.4. See Figure 1, Sheet 2.

(c) Go outboard along the aft side of lower wing stringer 5 to get to the inspection area on stringer 5 at the stub beam fitting at WBL 191.0. See Figure 1, Sheet 2.

(d) Make sure the paint on the transducer scan area is clean, smooth and in good condition. Paint that is not smooth and not in good condition will not transmit sufficient sound in the stringer flange. See Figure 1, Sheet 1 to see the transducer scan areas.

4. **Instrument Calibration**

NOTE: Refer to the instrument instruction manual for the instrument operation instructions.

A. Set the instrument frequency between 4 MHz and 6 MHz.

NOTE: No frequency adjustment is necessary for broadband instruments.

NOTE: Do not use reject.

B. Apply sufficient couplant on reference standard NDT3062 where transducer positions 1 and 2 are shown. See Figure 3.

C. Put the transducer at transducer position 1 on reference standard NDT3062 so it points at the fastener hole as shown in Figure 3. Make sure the front of the transducer is along the reference line as shown in Figure 3.

D. Adjust the range and delay controls so that the front edge of the signal from the fastener hole occurs at 60 percent of full screen width. Put the initial pulse at 0 on the horizontal baseline. See Figure 3.

E. Move the transducer to transducer position 2 so the transducer points to the reference notch. Make sure the front edge of the transducer is along the reference line as shown in Figure 3.

BOEING PROPRIETARY - Copyright © Unpublished Work - See title page for details

F. Lightly adjust the transducer at transducer position 2 until the signal from the reference notch is at a maximum height.

G. Adjust the gain so the maximum signal from the reference notch is at 90 percent of full screen height.

H. Do Paragraph 4.F. and Paragraph 4.G. again to make sure the signal from the reference notch is at 90 percent of full screen height.

I. Increase the gain by 6 dB.

5. Inspection Procedure

A. Calibrate the equipment as specified in Paragraph 4.

B. Apply sufficient couplant on the transducer scan areas on the aft flange of wing stringer 5. The transducer scan areas are adjacent to the sides of the stub beam fitting that is shown in Figure 1.

C. Put the transducer on the aft flange of stringer 5 so the transducer points at one of the fasteners on the stub beam fitting shown in Figure 1. Make sure the front of the transducer is against the stub beam fitting.

D. If necessary, slowly turn the transducer left and right until a signal from the fastener hole shows on the screen.

E. If the fastener hole does not show on the screen, increase the gain until the hole signal is at 20 percent of full screen height on the screen. Do not decrease the gain if the fastener hole signal is more than 20 percent of full screen height.

F. Slowly move the transducer away from the center of the hole to the forward side of the hole. Do this as you did during the calibration to find the reference notch. Make sure the front of the transducer is against the stub beam fitting as you move the transducer. Stop the transducer when the signal from the hole decreases to 0 percent of full screen height.

G. Slowly move the transducer away from the stub beam fitting by 0.5 inch (12.7 mm) and then back to the stub beam fitting.

(1) During the transducer movement, look for a signal to come into view immediately to the right of the hole signal. This is a crack indication. Possible cracks are in an aft to forward direction in stringer 5 at the stub beam fitting. See Figure 1.

H. Slowly turn the transducer to the center of the hole until the hole signal occurs on the display again.

I. Slowly turn the transducer away from the center of the hole so the hole signal decreases to zero percent of full screen height. Monitor the display for crack indications that could occur immediately to the right of the hole signal.

J. Move the transducer back to the position it was at in Paragraph 5.C. Make sure the transducer points at the center of the fastener hole and the hole signal occurs on the screen.

K. Do Paragraph 5.C. thru Paragraph 5.J. again but this time look for cracks on the aft side of the hole.

L. Put the transducer on the stringer 5 flange that is on the other side of the stub beam fitting. Make sure the transducer points at the center of the fastener hole while the front of the transducer is against the stub beam fitting as you did in Paragraph 5.C. See Figure 1 for the inspection areas on each side of the stub beam.

M. Do Paragraph 5.C. thru Paragraph 5.K. again to look for cracks in the stringer on this side of the stub beam fitting.

BOEING PROPRIETARY - Copyright © Unpublished Work - See title page for details

6. **Inspection Results**

NOTE: If you increased the gain to get a hole signal to occur on the screen as in Paragraph 5.E., put the gain back to where it was in Paragraph 4.I. It is necessary to have the gain at the level it was in Paragraph 4.I. before you make an analysis of crack signals as specified in Paragraph 6.A. and Paragraph 6.B.

A. Signals that are 30 percent of full screen height or higher that are to the right of the fastener hole signal are crack indications. To make an analysis of the crack signal, make sure the gain is put back to where it was in Paragraph 4.I.

B. Make sure the crack signal is to the immediate right of the fastener hole signal. Refer to how the hole signal and notch signal increased and decreased as the transducer was turned during the calibration.

C. Fastener holes have to be examined some more if they cause crack indications to occur. Remove the fastener where the crack indication was found and do an open hole, eddy current inspection as shown in Part 6, 51-00-00, Procedure 16.

BOEING PROPRIETARY - Copyright © Unpublished Work - See title page for details

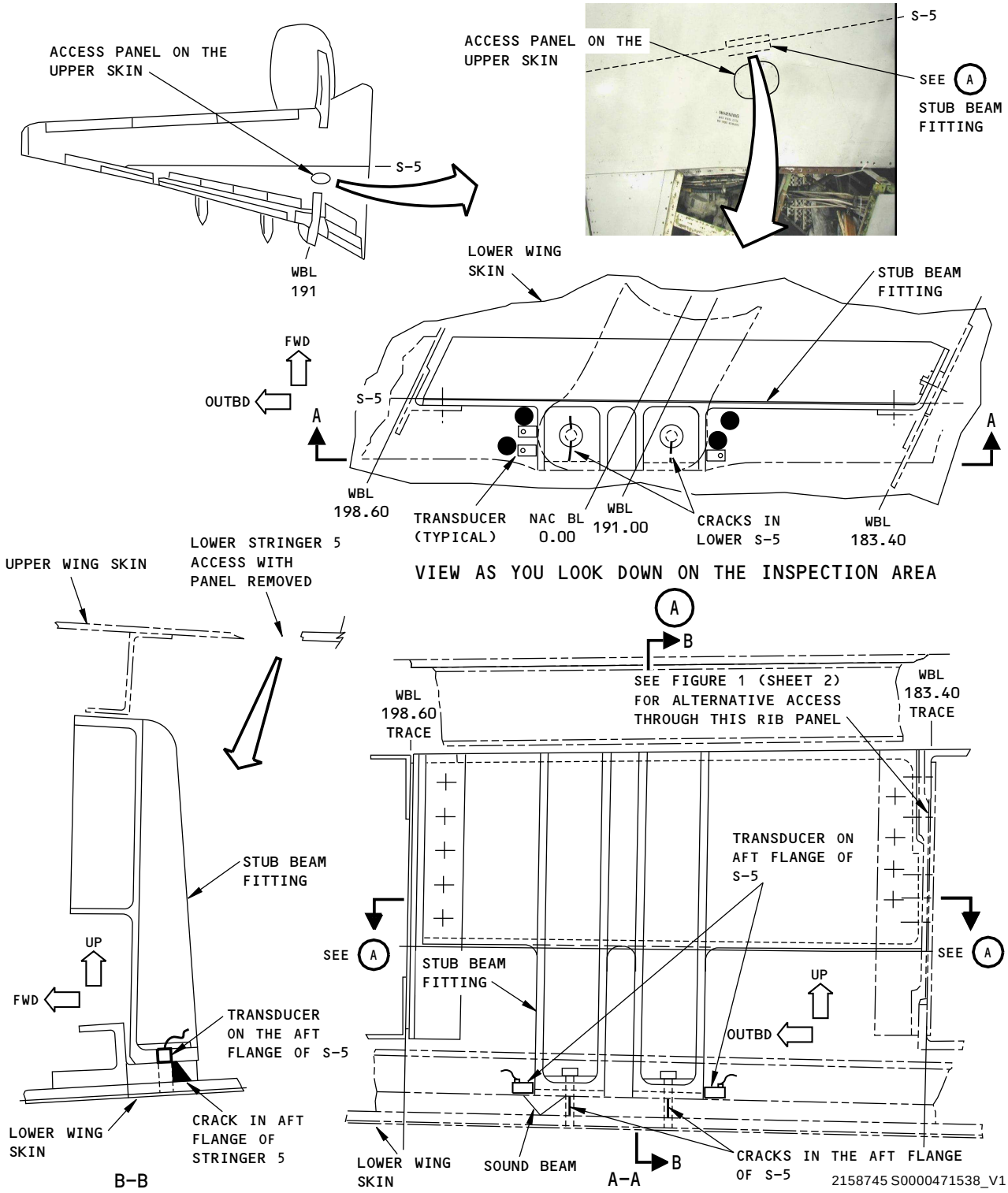

Inspection Areas on the Aft Flange of Lower Stringer 5
Figure 1 (Sheet 1 of 2)

BOEING PROPRIETARY - Copyright © Unpublished Work - See title page for details

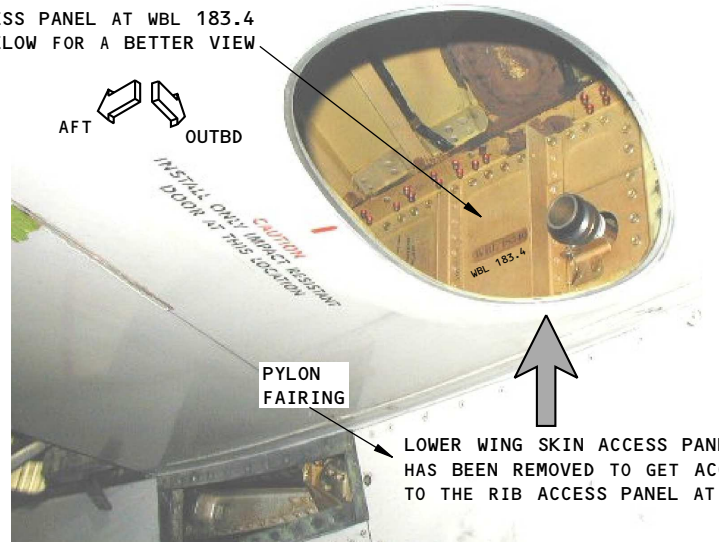

THIS IS THE VIEW OF THE LOWER WING SKIN ON THE LEFT WING. THE ACCESS PANEL IMMEDIATELY INBOARD OF WBL 183.4 HAS BEEN REMOVED HERE AND RIB ACCESS PANEL AT WBL

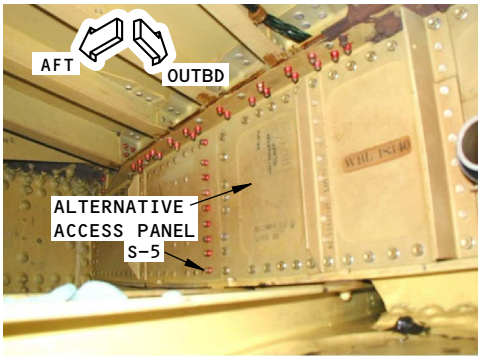

REMOVE THIS ACCESS PANEL IN THE RIB AT WBL 183.4 IF YOU CHOOSE NOT TO GET ACCESS TO THE INSPECTION AREA FROM THE TOP SKIN ACCESS PANEL.

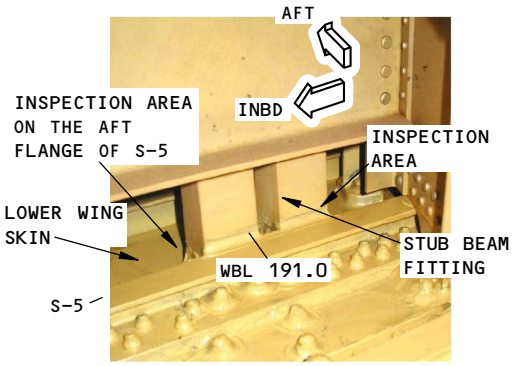

THIS IS THE VIEW OF THE STUB BEAM FITTING AT S-5 AND WBL 191.0 AS YOU LOOK AFT. THIS IS WHAT YOU WILL SEE AFTER THE ACCESS PANEL AT WBL 183.4 IS REMOVED (SEE PANEL IN THE PHOTO ON THE LEFT).

ALTERNATIVE ACCESS FOR THE INSPECTION AREA

2158746 S0000471540_V1

Inspection Areas on the Aft Flange of Lower Stringer 5
Figure 1 (Sheet 2 of 2)

BOEING PROPRIETARY - Copyright © Unpublished Work - See title page for details

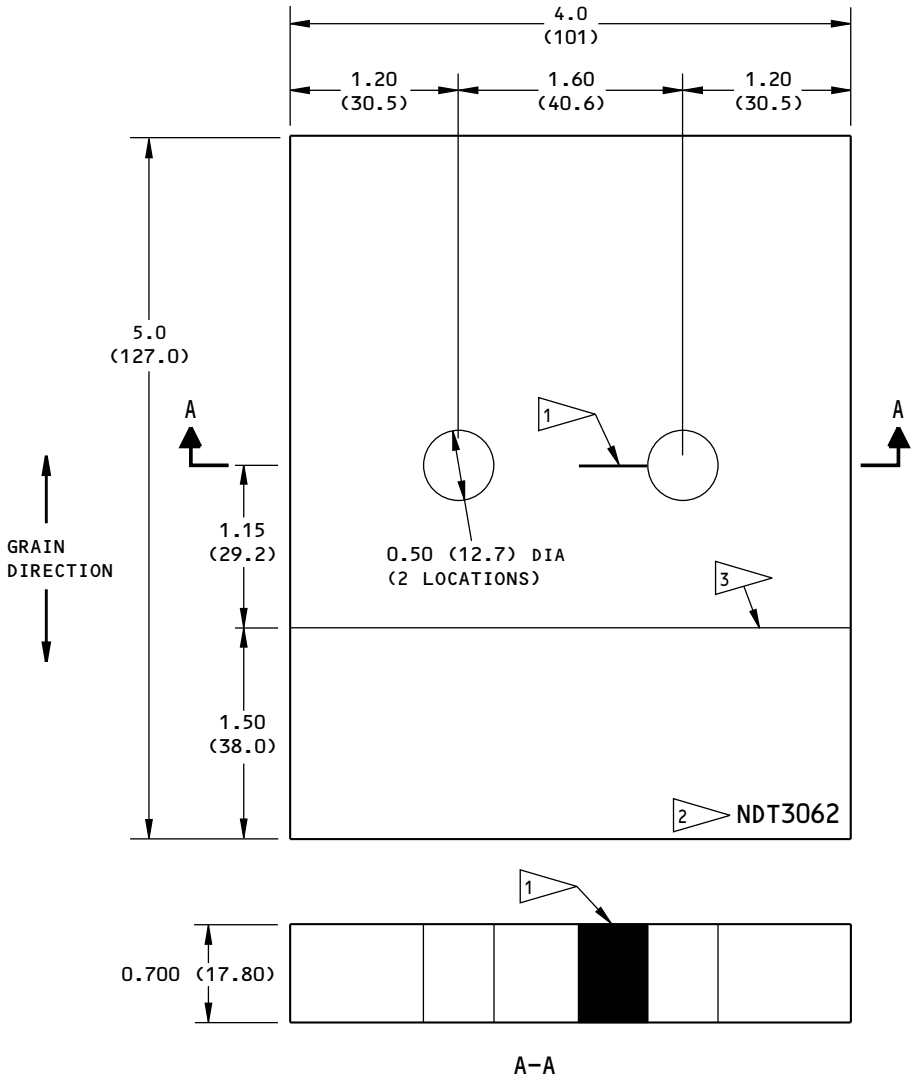

NOTES:

- ALL DIMENSIONS ARE IN INCHES (MILLIMETERS ARE IN PARENTHESES)
- TOLERANCE (UNLESS SPECIFIED DIFFERENTLY):

INCHES	MILLIMETERS
X.XXX = ±0.005	X.XX = ±0.1
X.XX = ±0.025	X.X = ±0.5
X.X = ±0.050	X = ±1

- SURFACE ROUGHNESS = 125 Ra OR BETTER
- MATERIAL:
  2024-T3511, 2024-T3, T4 OR 7075-T3 OR T4
  0.700 (17.80) X 5.0 (127.0) X 4.0 (101.0)
  CLAD OR BARE

1. EDM NOTCH OR JEWELER'S SAWCUT:
   LENGTH: 0.50 (12.7)
   DEPTH: THRU PART
   MAXIMUM WIDTH IS 0.02 (0.50)
2. ETCH OR STEEL STAMP THE REFERENCE STANDARD NUMBER NDT3062 AT THE LOCATION SHOWN.
3. SCRATCH A REFERENCE LINE WITH A RAZOR KNIFE ON THE TOP SURFACE. SCRATCH DEPTH: 0.001 (0.25) TO 0.005 (0.13)

2158747 S0000471541_V1

Reference Standard NDT3062
Figure 2

BOEING PROPRIETARY - Copyright © Unpublished Work - See title page for details

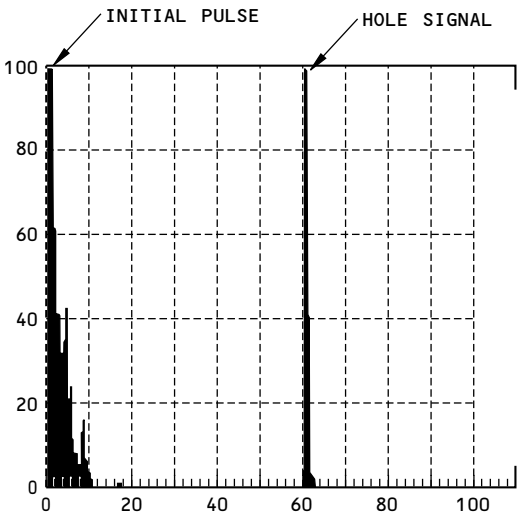

SIGNAL FROM TRANSDUCER POSITION 1

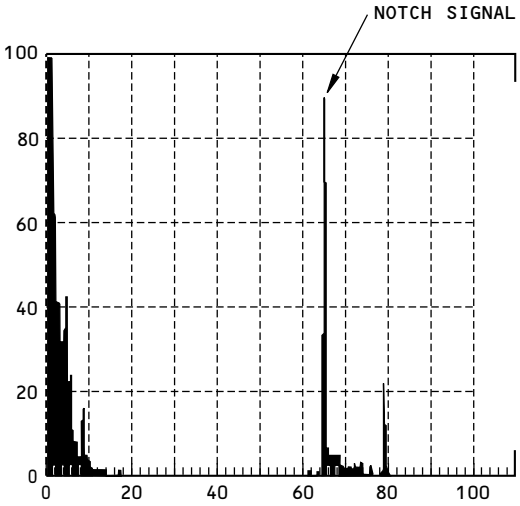

SIGNAL FROM TRANSDUCER POSITION 2

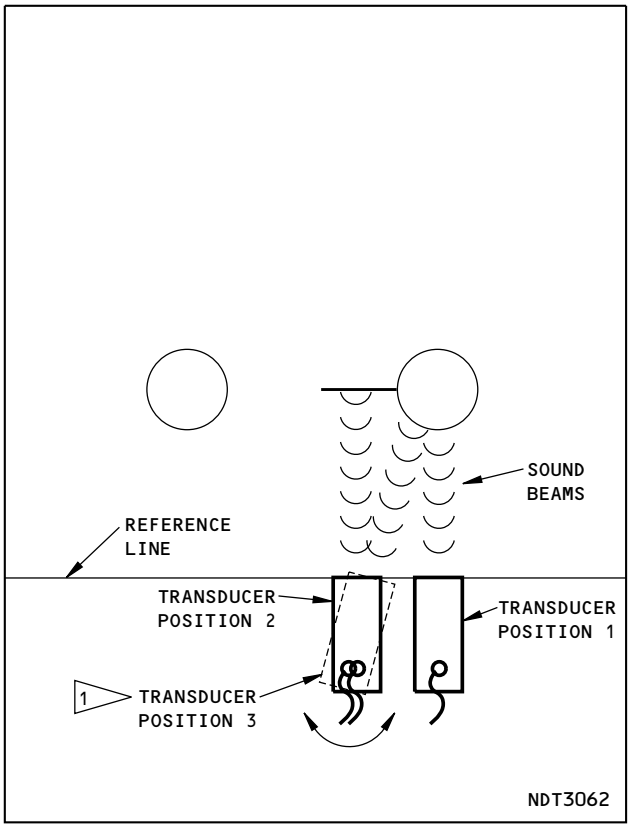

NOTES:

- WITH THE TRANSDUCER AT POSITION 2 AND THE NOTCH SIGNAL AT 90 PERCENT OF FULL SCREEN HEIGHT, INCREASE THE GAIN BY 6 DB.

1 TRANSDUCER POSITION 3 IS AT THE POSITION 2 LOCATION, BUT THE TRANSDUCER IS TURNED TO POINT AT THE HOLE.

2158748 S0000471542_V1

Calibration Signals and Transducer Positions
Figure 3

BOEING PROPRIETARY - Copyright © Unpublished Work - See title page for details

PART 4 - ULTRASONIC

WING FRONT SPAR - LOWER CHORD AT WBL 183.4, 191, 198.6 AND 254

1. Purpose

A. Use this procedure to find cracks in the lower chord of the wing front spar at WBL 183.4, 191, 198.6 and 254 (see Figure 1). This inspection procedure examines the horizontal flange of the lower chord for cracks that can start at the vertical flange of the front spar web and/or at the fastener holes in the horizontal flange. The inspection areas are as follows:

(1) The eight fastener holes where the nacelle support fitting attaches to the horizontal flange at WBL 183.4. See Figure 1, View C.

(2) The most inboard and outboard fastener holes where the nacelle support fitting attaches to the horizontal flange at WBL 191.0. See Figure 1, View D.

(3) The two fastener holes where the nacelle support fitting attaches to the horizontal flange at WBL 198.6. See Figure 1, View E.

(4) The two fastener holes where the rib shear tie at WBL 254 attaches to the horizontal flange. See Figure 2, View F.

B. This procedure uses 45 and 60 degree shear waves from 5 MHz transducers that are put on the upper surface of the horizontal flange (aft of the spar web). Figure 1 shows the transducer positions on the horizontal flange.

C. Entry into the wing fuel tank is necessary to do the inspections of all the areas. See the Warning in Paragraph 3.B.

D. 737 Supplemental Structural Inspection Document (D6-82669) Reference:

(1) Item: W-19D

2. Equipment

NOTE: Refer to Part 1, 51-01-00, for data about the equipment manufacturers.

A. All ultrasonic equipment that can do the calibration instructions of this procedure can be used.

(1) Instrument - Use an ultrasonic instrument that can operate from 4 to 6 MHz. Broadband instruments can be used if they can do the calibration instructions of this procedure. The instruments that follow were used to help prepare this procedure.

(a) Nortec 1000; Staveley Instruments, Inc.

(b) USN 50, 52L, 60; Krautkramer Branson

(c) EPOCH 4; Panametrics, Inc.

(2) Transducers

(a) Use a 5 MHz transducer with a top mounted connector that puts a 45-degree shear wave in aluminum. The case dimensions must not be more than 0.55 inch (14 mm) in length by 0.25 inch (6 mm) in width. The transducers that follow were used to help prepare this procedure.

NOTE: A short extension or a cable with a rigid connector at the transducer is recommended to make it easier to hold the transducer during the inspections.

1) SUSM 545AT; NDT Engineering Corp.

2) XAB-6084; Xactex Corp.

BOEING PROPRIETARY - Copyright © Unpublished Work - See title page for details

(b) Use a 5 MHz transducer with a top mounted connector that puts a 60-degree shear wave in aluminum. The case dimensions must not be more than 0.75 inch (19 mm) in length by 0.35 inch (9 mm) in width. The transducers that follow were used to help prepare this procedure.

1) ABFP Style, 389-020-480; Krautkramer

2) AP-HP-1/4-5.00-60A; Xactex Corp.

(3) Reference Standard - Make or buy reference standard NDT3054. See Figure 2.

(4) Couplant - All ultrasonic couplants that will not cause damage to the airplane structure can be used. A light commercial grease works well.

3. Prepare for the Inspection

A. Identify all the inspection areas in Figure 1.

WARNING: PRECAUTIONS AND SAFETY PROCEDURES CONTAINED IN CHAPTER 28 OF THE MAINTENANCE MANUAL MUST BE DONE BY PERSONNEL WHO GO INTO A FUEL TANK THAT HAS CONTAINED FUEL. AN EXPLOSION IS POSSIBLE AND THE AIR CAN BE POISONOUS IN FUEL TANKS THAT HAVE CONTAINED FUEL.

B. Get access into the wing fuel tank through access panels 7204L/7404R, 7205L/7407R and 7207L/7407. Remove the inspar rib access panel 7224L/7424R to get access to the inspection areas outboard of WBL 183.4 and inboard of WBL 198.6.

C. Remove the tube on the outboard side of the WBL 198.6 rib to get access to the inspection area outboard of WBL 198.6.

D. Clean all the inspection surfaces. Remove sealant from all the surfaces where the transducer will be put on the inspection surface. See Figure 1 for the transducer inspection surfaces. If the surface is rough, make it smooth by approved procedures. It is not necessary to remove paint unless it is loose.

4. Instrument Calibration

A. Three instrument calibrations are necessary to fully examine the inspection areas identified in Figure 1.

(1) Calibrate the instrument to examine the eight fastener holes at WBL 183.4 (Figure 1, View C).

(a) Connect a 45 degree transducer to the instrument.

(b) Set the instrument frequency from 4 to 6 MHz if a broadband instrument is not used.

(c) Put a sufficient amount of couplant on the inspection surface of reference standard NDT3054 at transducer positions 1 thru 3. See Detail I in Figure 3.

(d) Put the transducer at transducer position 1 on the inspection surface of the reference standard as shown in Detail I in Figure 3.

1) Make sure the front of the transducer is on the line identified as “A” and that the sound beam is pointed in the direction of the hole.

2) Adjust the instrument gain, delay and range controls as necessary to get a signal from the hole to occur on the screen display.

3) Move and turn the transducer along the line as necessary to get a maximum signal from the hole.

(e) Adjust the instrument delay and range controls to get the signal from the hole set to 80% of full screen width (FSW) with the initial pulse set to 0%. See Detail II in Figure 3 for the screen display.

(f) Move the transducer to position 2 with the sound beam pointed at the notch. See Detail I in Figure 3.

BOEING PROPRIETARY - Copyright © Unpublished Work - See title page for details

1) If necessary, adjust the instrument gain to keep the signal on the screen display.
2) Move and turn the transducer from side to side along the line, as much as necessary, to get a maximum signal from the notch.
3) Monitor the distance that the transducer is moved from Position 1 to get the maximum signal from the notch at Position 2. This will help identify the amount of travel the transducer has moved from the fastener hole to a crack of the approximate same length.

NOTE: The notch signal will come into view and increase in height a short distance to the right of the hole signal as the transducer is moved away from the hole.

(g) Adjust the instrument gain to get the notch signal to be between 50 and 80% of full screen height (FSH). See Detail III in Figure 3 for the screen display. This instrument gain setting will be used to examine all eight fastener holes at WBL 183.4.

NOTE: Do not use reject.

(h) Move the transducer back to position 1 and continue to move it to the opposite side of the hole until the signal is gone. Monitor the distance the transducer is moved from Position 1 to where the signal is gone. This will help identify the amount of travel the transducer has moved from the fastener hole without a crack.

(i) Move the transducer to position 3 with the sound beam pointed in the direction of the hole. See Detail I in Figure 3.

1) Monitor the screen display to make sure that the signal from the hole occurs between 35 and 40% of FSW as shown in Detail IV in Figure 3.

(2) Calibrate the instrument to examine the two fastener holes at WBL 198.6 (see Figure 1, View E), and WBL 254, (see Figure 1, View F).

(a) Do Paragraph 4.A.(1)(a) thru Paragraph 4.A.(1)(d) again but put the transducer at position 3 as shown in Detail I in Figure 3.

(b) Adjust the instrument gain to keep the signal from the hole on the screen display. It is not necessary to adjust the instrument delay and range controls from that set in Paragraph 4.A.(1)(e). See Detail IV in Figure 3 for the screen display.

(c) Move the transducer to position 4 with the sound beam pointed at the notch. See Detail I in Figure 3.

1) Adjust the instrument gain to keep the signal on the screen display.
2) Move the transducer from side to side along the line to get a maximum signal from the notch.
3) Monitor the distance that the transducer is moved from Position 3 to get the maximum signal from the notch at Position 4. This will help identify the amount of travel the transducer has moved from the fastener hole to a crack of the approximate same length.

NOTE: The notch signal will come into view and increase in height a short distance to the right of the hole signal as the transducer is moved away from the hole.

(d) Adjust the instrument gain to get the notch signal to be between 50 and 80% (FSH). See Detail V in Figure 3 for the screen display.

NOTE: Do not use reject.

(3) Calibrate the instrument to examine the two fastener holes at WBL 191 (see Figure 1, View D).

(a) Connect a 60 degree transducer to the instrument.

BOEING PROPRIETARY - Copyright © Unpublished Work - See title page for details

(b) Do Paragraph 4.A.(1)(b) thru Paragraph 4.A.(1)(d) again but put the transducer at position 5, with the front of the transducer on the line identified as “B”. See Detail VI in Figure 3.

(c) Adjust the instrument delay and range controls to get the signal from the hole set to 80% of FSW with the initial pulse set to 0%. See Detail VII in Figure 3 for the screen display.

(d) Adjust the instrument gain to get the hole signal to be between 50 and 80% of FSH. See Detail VII in Figure 3 for the screen display.

NOTE: Do not use reject.

5. **Inspection Procedure**

A. Examine the eight fastener holes at WBL 183.4. See Figure 1, View C. Examine the four fastener holes inboard of WBL 183.4 from the inboard side of the fitting and the four fastener holes outboard of WBL 183.4 from the outboard side of the fitting.

(1) Calibrate the instrument as specified in Paragraph 4.A.(1).

(2) Put a sufficient amount of couplant on the transducer inspection surfaces. See Figure 1, View C.

(3) Examine the horizontal flange for cracks that extend from the vertical flange of the front spar web to the fastener holes and for cracks at each side of the fastener holes shown in Figure 1, View C, as follows:

(a) Put the transducer on the inspection surface with the front of the transducer as near as possible to the edge of the nacelle fitting. See Figure 1, View C, flagnote 3 for the typical transducer positions.

(b) Increase the gain 18 dB above that set in Paragraph 4.A.(1)(g).

(c) Point the transducer to a fastener hole to be examined to get a signal from the hole.

(d) Make a scan in the inspection areas as follows (see Figure 1, flagnote 1, for the typical crack direction and orientation):

1) Move and/or turn the transducer along the edge of the fitting in the forward and aft direction, away from the hole, as much as possible within the inspection surface area. Also move the transducer away from the edge of the fitting in the inboard or outboard direction as much as 0.5 inches (13 mm) if possible.

2) As you move the transducer away from the hole, monitor the screen display for crack type signals.

a) Monitor the screen display for possible crack signals between 20 and 60% of FSW from the fastener holes nearest to the edge of the fitting.

b) Monitor the screen display for possible crack signals between 50 and 100% of FSW from the fastener holes furthest from the edge of the fitting.

3) The signal from the fastener hole will decrease quickly as the transducer is turned away. Look for a signal that will occur immediately to the right of the hole signal as you move and/or turn the transducer.

4) Carefully monitor the direction and position of the transducer at all times to help identify signals that occur.

NOTE: Use the travel distance the transducer was moved from the fastener hole during calibration.

B. Examine the two fastener holes at WBL 191. See Figure 1, View D. Examine the fastener hole inboard of WBL 191 from the inboard side of the fitting and the fastener hole outboard of WBL 191 from the outboard side of the fitting.

BOEING PROPRIETARY - Copyright © Unpublished Work - See title page for details

(1) Calibrate the instrument as specified in Paragraph 4.A.(3).

(2) Put a sufficient amount of couplant on the transducer inspection surfaces. See Figure 1, View D.

(3) Examine the horizontal flange for cracks that extend from the vertical flange of the front spar web to the fastener holes identified in Figure 1, View D as follows:

(a) Put the transducer on the inspection surface with the front of the transducer as near as possible to the edge of the fitting and adjacent to the fastener collar. See Figure 1, View D, flagnote 3 that shows the typical transducer positions.

(b) Increase the gain 18 dB above that set in Paragraph 4.A.(3)(d).

(c) Point the transducer to the center, most forward fastener hole to get a signal to occur on the screen display between approximately 60 and 65% of FSW.

(d) Move and/or turn the transducer away from the hole towards the direction of the possible crack identified by flagnote 2 in Figure 1.

(e) Monitor the screen display for the fastener hole signal to occur or for a crack signal that can occur between the initial pulse signal and the hole signal.

C. Examine the two fastener holes at WBL 198.6, (Figure 1, View E) and WBL 254, (Figure 1, View F). Examine the fastener hole inboard of WBL 198.6 and 254 from the inboard side of the fitting and the fastener hole outboard of WBL 198.6 and 254 from the outboard side of the fitting.

(1) Calibrate the instrument as specified in Paragraph 4.A.(2).

(2) Put a sufficient amount of couplant on the transducer inspection surfaces. See Figure 1, Views E and F.

(3) Examine the horizontal flange for cracks that extend from the vertical flange of the front spar web to the fastener holes and for cracks at the fastener holes identified in Figure 1, View E and F as follows:

(a) Put the transducer on the inspection surface with the front of the transducer as near as possible to the edge of the fitting. See Figure 1, View E and F, flagnote 3 for the typical transducer positions.

(b) Increase the gain 18 dB above that set in Paragraph 4.A.(2)(d).

(c) Point the transducer to a fastener hole to be examined to get a signal from the hole.

(d) Make a scan within the inspection area as follows (see Figure 1, flagnote 1, for the typical crack direction and orientation.):

1) Move and/or turn the transducer along the edge of the fitting in the forward and aft direction, away from the hole, as much as possible within the inspection surface area. Also move the transducer away from the edge of the fitting in the inboard or outboard direction as much as 0.50 inches (13 mm), if possible.

2) As you move the transducer away from the hole, monitor the screen display for crack type signals.

a) Monitor the screen display for possible crack signals between 40 and 80% of FSW from the fastener holes at WBL 198.6.

b) Monitor the screen display for possible crack signals between 20 and 50% of FSW from the fastener holes at WBL 254.

3) The signal from the fastener hole will decrease quickly as the transducer is turned away. Look for a signal that will occur immediately to the right of the hole signal as you move and/or turn the transducer.

BOEING PROPRIETARY - Copyright © Unpublished Work - See title page for details

4) Carefully monitor the direction and position of the transducer at all times to help identify signals that occur.

NOTE: Use the travel distance the transducer was moved from the fastener hole during calibration.

6. Inspection Results

A. For the inspections done as specified in Paragraph 5.A. (see Figure 1, View C).

(1) An ultrasonic signal that is 50% (or more) of the signal height set in Paragraph 4.A.(1)(g) and between the screen width locations for the fastener holes that follows, is a possible crack indication.

(a) Monitor the screen display between 20% and 60% of FSW for possible cracks from the fastener holes nearest to the edge of the fitting.

(b) Monitor the screen display between 50% and 100% of FSW for possible cracks from the fastener holes furthest to the edge of the fitting.

B. For the inspections done as specified in Paragraph 5.B. (see Figure 1, View D).

(1) An ultrasonic signal that is 50% (or more) of the signal height set in Paragraph 4.A.(3)(d) and occurs between the initial pulse and the fastener hole signal identified in Paragraph 5.B.(3)(c), is a possible crack indication.

C. For the inspections done as specified in Paragraph 5.C. (see Figure 1, Views E and F).

(1) An ultrasonic signal(s) that is 50% (or more) of the signal height set in Paragraph 4.A.(2)(d) and between the screen width locations for the fastener holes that follows, is a possible crack indication.

(a) Monitor the screen display for signals between 40% and 80% of FSW for possible cracks from the fastener holes at WBL 198.6.

(b) Monitor the screen display for signals between 20% and 50% of FSW for possible cracks from the fastener holes at WBL 254.

BOEING PROPRIETARY - Copyright © Unpublished Work - See title page for details

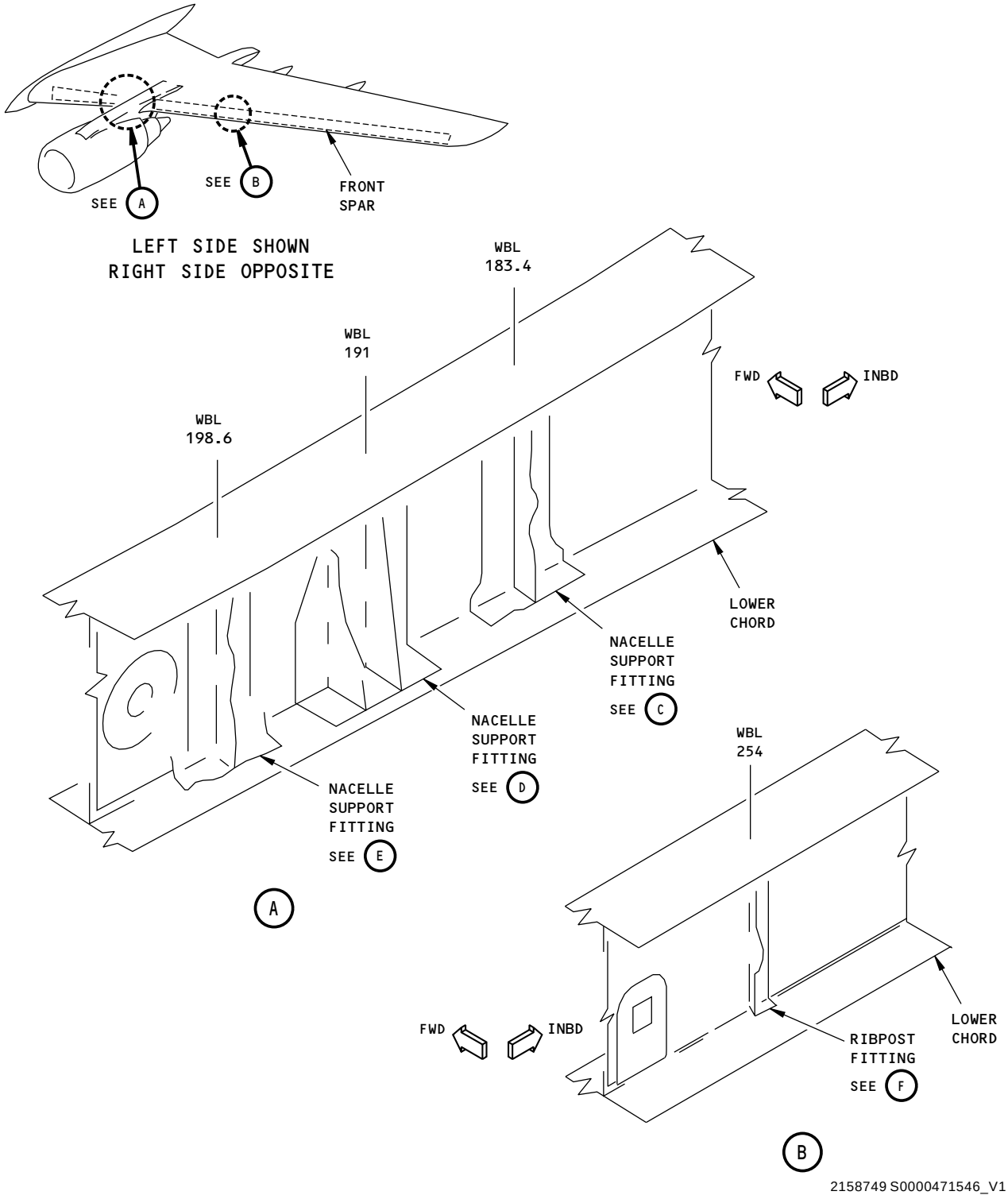

2158749 S0000471546_V1

Front Spar - Lower Chord - WBL 183.4, 191, 198.6 and 254
Figure 1 (Sheet 1 of 3)

BOEING PROPRIETARY - Copyright © Unpublished Work - See title page for details

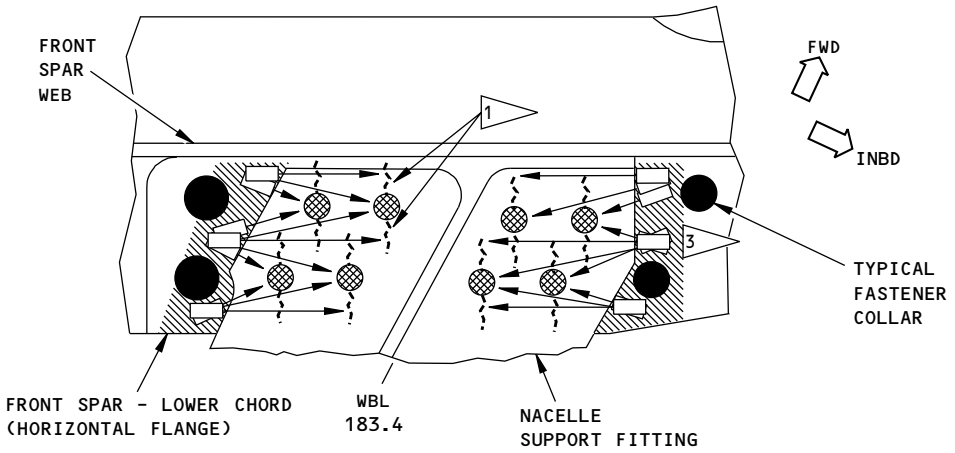

TOP VIEW OF THE LOWER CHORD

C

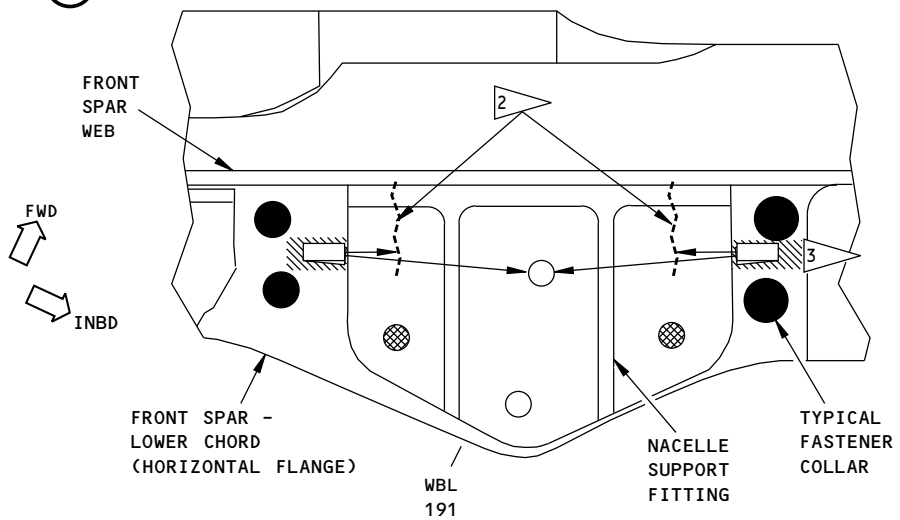

TOP VIEW OF THE LOWER CHORD

D

NOTES:

FASTENER HOLE LOCATIONS TO EXAMINE

TRANSDUCER INSPECTION SURFACE

1 TYPICAL CRACK DIRECTION AND LOCATION THAT CAN COME FROM THE FORWARD AND AFT SIDES OF THE FASTENER HOLES IN THE HORIZONTAL FLANGE.

2 TYPICAL CRACK THAT STARTS AT THE VERTICAL FLANGE OF THE FRONT SPAR WEB AND EXTENDS AFT TO THE FASTENER HOLE IDENTIFIED

3 TYPICAL TRANSDUCER POSITION ON THE HORIZONTAL FLANGE WITH THE FRONT OF THE TRANSDUCER AS NEAR AS POSSIBLE TO THE EDGE OF THE FITTING. THE TRANSDUCER POSITIONS SHOWN ARE INITIAL POSITIONS ONLY. MOVE THE TRANSDUCER ALONG THE EDGE OF THE FITTING (FORWARD AND AFT DIRECTION) AS MUCH AS POSSIBLE IN THE INSPECTION AREA IDENTIFIED. DURING THE SCAN, MOVE THE TRANSDUCER AWAY FROM THE EDGE OF THE FITTING (INBOARD OR OUTBOARD DIRECTION) AS MUCH AS 0.5 INCHES (25 MM), IF POSSIBLE. TURN THE TRANSDUCER APPROXIMATELY 10 TO 15 DEGREES IN THE FORWARD AND AFT DIRECTIONS TO EXAMINE FOR OFF-ANGLE CRACKS AS YOU DO THE SCAN.

2158750 S0000471547_V1

Front Spar - Lower Chord - WBL 183.4, 191, 198.6 and 254
Figure 1 (Sheet 2 of 3)

BOEING PROPRIETARY - Copyright © Unpublished Work - See title page for details

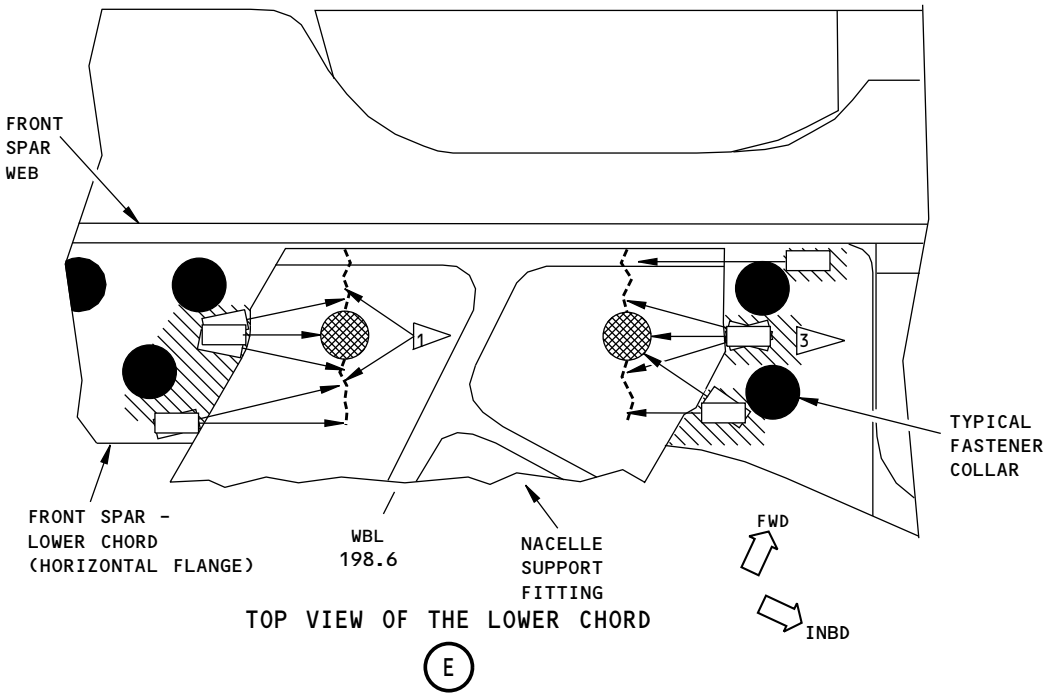

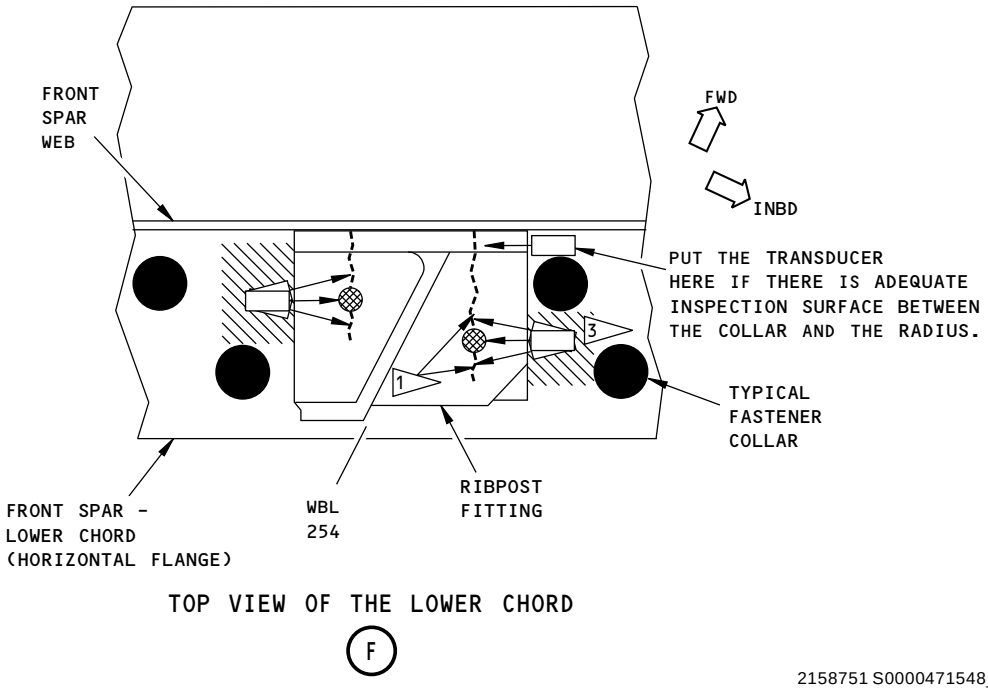

2158751 S0000471548_V1

Front Spar - Lower Chord - WBL 183.4, 191, 198.6 and 254
Figure 1 (Sheet 3 of 3)

BOEING PROPRIETARY - Copyright © Unpublished Work - See title page for details

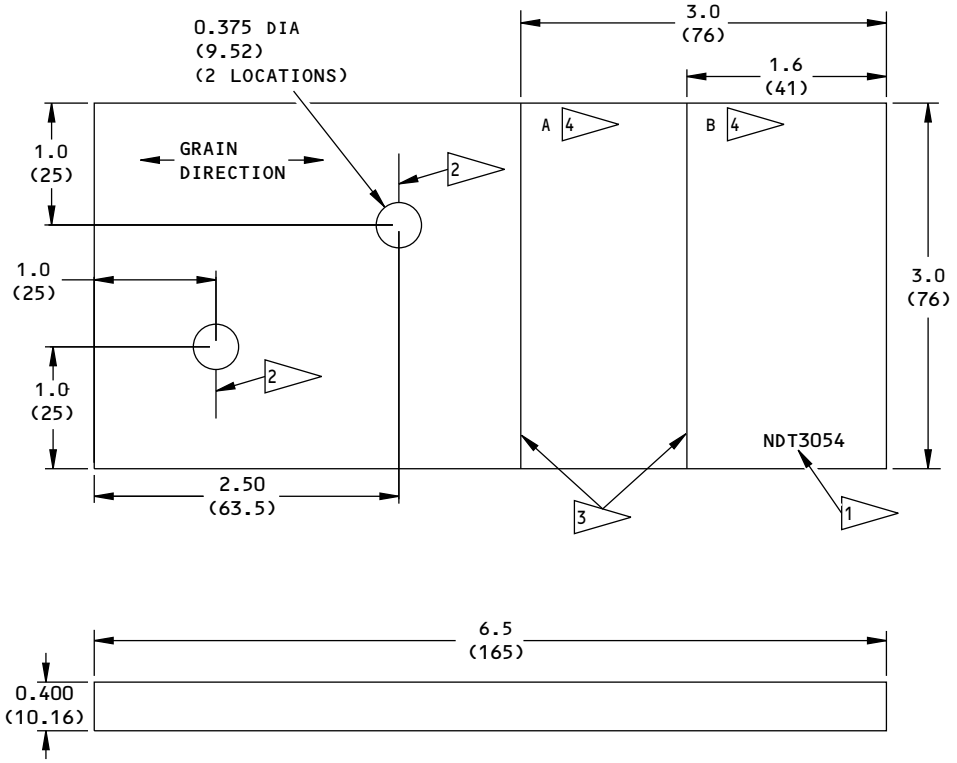

NOTES:

- ALL DIMENSIONS ARE IN INCHES (MILLIMETERS ARE IN PARENTHESES).
- TOLERANCES (UNLESS SPECIFIED DIFFERENTLY):

INCHES	MILLIMETERS
X.XXX = ±0.005	X.XX = ±0.10
X.XX = ±0.025	X.X = ±0.5
X.X = ±0.050	X = ±1

- MATERIAL: AIRCRAFT QUALITY ALUMINUM
- SURFACE ROUGHNESS: 63 Ra OR BETTER.

1 ETCH, ENGRAVE OR STAMP THE REFERENCE STANDARD NUMBER NDT3054 AT APPROXIMATELY THIS LOCATION

2 EDM NOTCH LOCATION AND TOLERANCE: THE NOTCH MUST BE WITHIN ±0.005 (±0.10) OF THE CENTERLINE OF THE HOLE AS SHOWN.

NOTCH DIMENSIONS AND TOLERANCE:
WIDTH - 0.010 (0.30) ±0.002 (0.05)
LENGTH - 0.400 (10.16)
DEPTH - FULL PART THICKNESS

3 ETCH OR SCRIBE A LINE TO IDENTIFY THE TRANSDUCER POSITION FOR THE INSTRUMENT CALIBRATION.

4 ETCH, ENGRAVE OR STAMP THE LETTER TO IDENTIFY THE TRANSDUCER POSITION FOR THE INSTRUMENT CALIBRATION.

2158752 S0000471549_V1

Reference Standard NDT3054
Figure 2

BOEING PROPRIETARY - Copyright © Unpublished Work - See title page for details

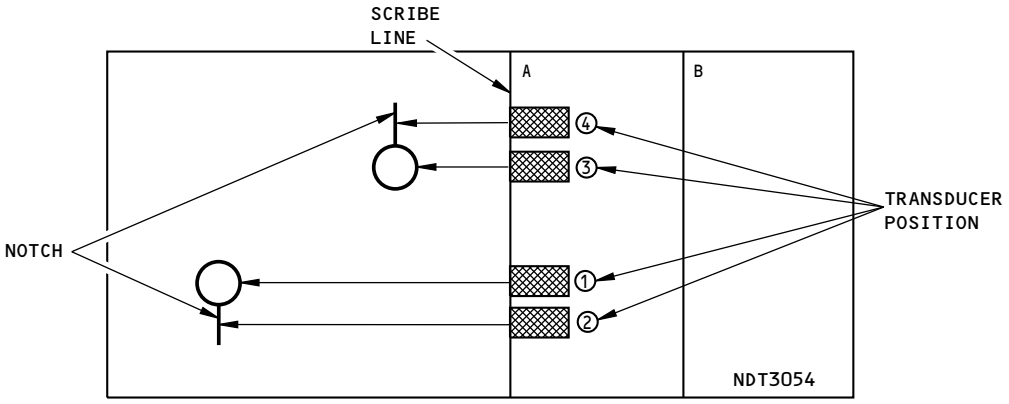

CALIBRATION TRANSDUCER POSITIONS TO EXAMINE FASTENER HOLES AT WBL 183.4, 198.6 AND 254
DETAIL I

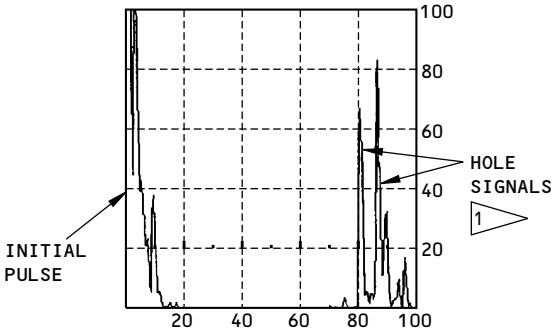

TRANSDUCER POSITION 1 SIGNAL DISPLAY
DETAIL II

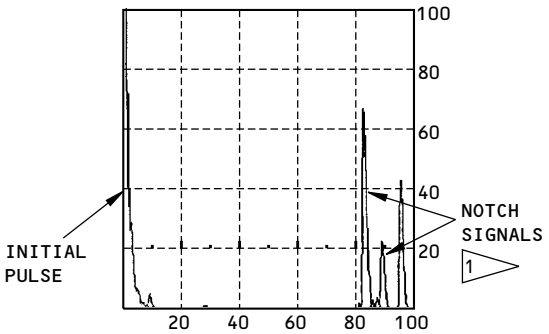

TRANSDUCER POSITION 2 SIGNAL DISPLAY
DETAIL III

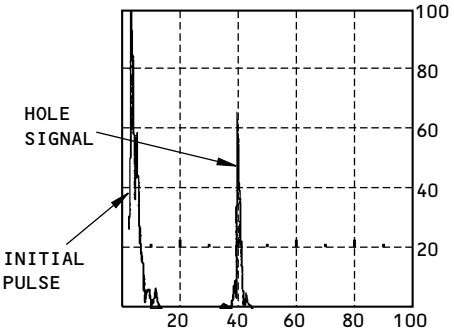

TRANSDUCER POSITION 3 SIGNAL DISPLAY
DETAIL IV

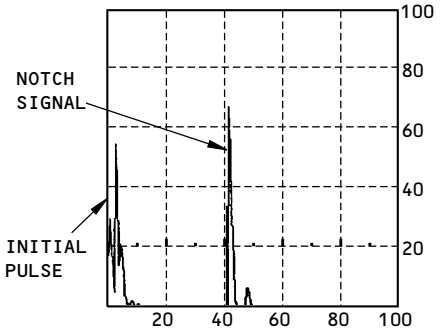

TRANSDUCER POSITION 4 SIGNAL DISPLAY
DETAIL V

NOTES:

- THE DETAIL II THRU V AND VII SCREEN DISPLAYS ARE EXAMPLES. THE SIGNALS CAN LOOK DIFFERENT WITH OTHER INSTRUMENTS AND TRANSDUCER MIXES.

1 MULTIPLE SIGNALS CAN OCCUR AT THE SAME TIME, THESE ARE REFLECTIONS FROM THE TOP AND BOTTOM SURFACES OF THE REFERENCE STANDARD.

2158753 S0000471550_V1

Instrument Calibration
Figure 3 (Sheet 1 of 2)

BOEING PROPRIETARY - Copyright © Unpublished Work - See title page for details

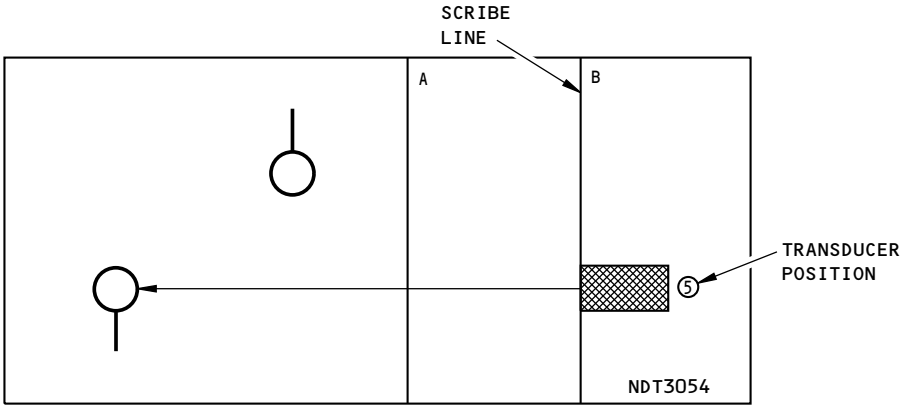

CALIBRATION TRANSDUCER POSITION TO EXAMINE
FASTENER HOLES AT WBL 191
DETAIL VI

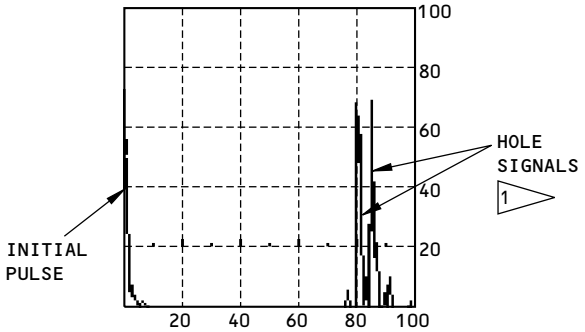

TRANSDUCER POSITION 5 SIGNAL DISPLAY
DETAIL VII

2158754 S0000471551_V1

Instrument Calibration
Figure 3 (Sheet 2 of 2)

BOEING PROPRIETARY - Copyright © Unpublished Work - See title page for details

WING FRONT SPAR AT THE NACELLE SUPPORT FITTINGS - LOWER CHORD AT THE R1 SIDE LINK BACKUP FITTING AND WING LOWER SKIN AT THE R7/R8 SIDE LINK ATTACH FITTING

1. Purpose

A. Use this procedure to find cracks in the wing lower skin at the R7/R8 side link attach fitting and the lower chord at the R1 side link backup fitting. These fittings are at the front spar of the nacelle support fittings. See Figure 1 for the inspection areas.

B. This inspection procedure examines the wing lower skin for cracks on the forward and aft sides of the fastener holes where the R7/R8 side link attached fitting is attached. This inspection is done from the lower surface of the lower skin. See Figure 1, View C for the inspection areas.

C. This inspection procedure examines the skin and web flanges of the lower chord of the front spar for cracks at the fastener holes where the R1 side link backup fitting attaches to the skin and web flanges. The inspection areas are as follows:

(1) Examine the skin flange for possible cracks on the forward and aft sides of the fastener holes. See Figure 1, View D.

(2) Examine the web flange for possible cracks on the upper and lower sides of the fastener holes. See Figure 1, View E.

D. This procedure uses two 5 MHz transducers that cause a 70 degree shear wave in aluminum to examine all of the inspection areas. One transducer must have a top-mounted connector and the other must have a side-mounted connector.

E. It is necessary to go into the wing fuel tank to do the inspections of the lower chord of the front spar. See the warning in Paragraph 3.

F. 737 Maintenance Planning Document (MPD) Damage Tolerance Rating (DTR) Check Form Reference:

(1) Item: 57-20-04-9

2. Equipment

A. General

(1) Use ultrasonic equipment that can be calibrated on the reference standards specified in Paragraph 4.

(2) Refer to Part 1, 51-01-00, for data about the equipment manufacturers.

B. Instrument - Use an ultrasonic instrument that can:

(1) Operate in the frequency range of 4 to 6 MHz.

(2) Be calibrated as specified in the calibration instructions of this procedure. The instruments that follow were used to help prepare this procedure.

(a) Sonic 1200; Staveley Instruments, Inc.

(b) USM Go; GE inspection Technologies

C. Transducers - Use two 5 MHz transducers, one with a top-mounted connector and the other with a side-mounted connector that puts a 70-degree shear wave in aluminum. The case dimensions must not be more than 1.0 inch (25 mm) in length. The transducers that follow were used to help prepare this procedure.

(1) LA-705T (top-mount); Techna NDT

BOEING PROPRIETARY - Copyright © Unpublished Work - See title page for details

(2) LA-705S (side-mount); Techna NDT

D. Transducer Adapter - It is recommended to use an adapter (extension with a flexible shaft and a right-angle connector) with the transducer at transducer position 1 (TP1) shown in Figure 1, View C. It is not easy to hold the transducer and get access to area TP1. The transducer adapter that follows was used to help prepare this procedure.

(1) MFLX90-6 (6 inches (152 mm) length); Techna NDT

E. Reference Standard - Use reference standard NDT3172. See Figure 2.

F. Couplant - Use an ultrasonic couplant that will not damage the airplane structure.

3. Prepare for the Inspection

WARNING: PERSONNEL WHO ENTER A FUEL TANK MUST KNOW THE PRECAUTIONS AND SAFETY PROCEDURES CONTAINED IN CHAPTER 28 OF THE BOEING AIRCRAFT MAINTENANCE MANUAL. DANGEROUS FUMES AND THE POSSIBILITY OF AN EXPLOSION EXIST IN THE FUEL TANKS.

A. To get access to examine the lower skin inspection areas, remove the strut aft fairing access panels 434AR, 434AL and 434BL on the left wing and 444AL, 444AR and 444BR on the right wing. If access to the inspection areas is not easy, remove the strut aft fairing.

B. To examine the lower chord inspection areas at the front spar, get access into the main tank through the access door at WS 216; access panel 532AB on the left wing and 632AB on the right wing. Then remove the internal access panel in rib number 6; panel 532AZ on the left wing and 632AZ on the right wing.

C. Identify, clean, and, if necessary, remove sealant from all the inspection surfaces where the transducer will travel. See Figure 1, Views C, D and E for the transducer positions. If the surface is rough, make it smooth by approved procedures. It is not necessary to remove paint unless it is loose.

4. Instrument Calibration

NOTE: It will be necessary to use a top and a side-mounted transducer to fully examine all the inspection areas identified in Figure 1, Views C, D and E because of access limits.

A. Connect a transducer with a top-mounted connector to the instrument.

B. Set the instrument frequency between 4 and 6 MHz, if a broadband instrument is not used.

C. Put a sufficient quantity of couplant on the reference standard at TP1 thru TP3. See Detail I in Figure 3.

D. Put the transducer at TP1 with the sound beam pointed at the hole. See Detail I in Figure 3.

NOTE: If you will use the transducer adapter at TP1 that is shown in Figure 1, View C, during the airplane inspection, it is necessary to use the adapter (extension with a flexible shaft and a right-angle connector) on the reference standard during calibration.

(1) Make sure the front of the transducer is on the scribe line and that the sound beam is pointed in the direction of the hole.

(2) Adjust the instrument gain, delay and range controls as necessary to get a signal from the hole to occur on the screen display.

(3) Move and turn the transducer along the scribe line as necessary to get a maximum signal from the hole.

E. Adjust the instrument delay and range controls to get the signal from the hole set to 90% of full screen width (FSW) with the initial pulse set to 0%. See the screen display in Detail II in Figure 3.

BOEING PROPRIETARY - Copyright © Unpublished Work - See title page for details

F. Adjust the instrument gain to get the signal from the hole set to 80% of full screen height (FSH) and record the gain.

G. Put the transducer at TP2 with the sound beam pointed at the hole. See Detail I in Figure 3.

H. Do Paragraph 4.D.(1) and Paragraph 4.D.(3) again. The signal from the hole must be between 65 and 70% of FSW. See the screen display in Detail III in Figure 3.

I. Slowly move the transducer to TP3 with the sound beam pointed at the notch and monitor the signal from the notch. Make sure the front of the transducer is always on the scribe line. See Detail I in Figure 3.

(1) The notch signal will come into view a short distance to the right of the hole signal and increase in height as the transducer is moved away from the hole.

(2) Move the transducer along the scribe line, away from the hole, to get the maximum signal from the notch. Then adjust the instrument gain to get the notch signal to 80% of FSH. See the screen display in Detail III in Figure 3.

NOTE: Do not use reject.

(3) Monitor the distance the transducer moves from the hole to where the maximum signal height from the notch was found.

(4) Move the transducer back to TP2 and continue to move it to the opposite side of the hole until the signal is gone. Monitor the distance the transducer is moved from TP2 to where the signal is gone.

J. Put a sufficient quantity of couplant on the reference standard at TP4 and TP5. See Detail I in Figure 3.

K. Put the transducer at TP4 with the sound beam pointed in the direction of the hole. See Detail I in Figure 3.

(1) Make sure the front of the transducer is on the scribe line and that the sound beam is pointed in the direction of the hole.

(2) Move and turn the transducer along the scribe line as necessary to get a maximum signal from the hole.

L. Monitor the screen display to make sure that the signal from the hole occurs at approximately 45% of FSW. See the screen display in Detail IV in Figure 3.

M. Slowly move the transducer to TP5 with the sound beam pointed at the notch and monitor the signal from the notch. Make sure the front of the transducer is always on the scribe line. See Detail I in Figure 3.

(1) The notch signal will come into view a short distance to the right of the hole signal and increase in height as the transducer is moved away from the hole.

(2) Move the transducer along the scribe line, away from the hole, to get the maximum signal from the notch. Then adjust the gain as necessary to get the notch signal to 80% of FSH. See the screen display in Detail IV in Figure 3.

NOTE: Do not use reject.

(3) Monitor the distance the transducer moves from the hole to where the maximum signal height from the notch was found.

(4) Move the transducer back to TP4 and continue to move it to the opposite side of the hole until the signal is gone. Monitor the distance the transducer is moved from TP4 to where the signal is gone.

BOEING PROPRIETARY - Copyright © Unpublished Work - See title page for details

N. Record or, if possible, save the calibration setup that will be used to examine the inspection areas with this transducer.

O. Connect a transducer with a side-mounted connector to the instrument and do Paragraph 4.C. thru Paragraph 4.M. again.

P. Record or, if possible, save the calibration setup that will be used to examine the inspection areas with this transducer.

5. Inspection Procedure

NOTE: Use a transducer with a top-mounted connector to examine the inspection areas from TP1. Use a transducer with a side-mounted connector to examine the inspection areas from TP2. The inspection areas examined from TP3 and TP4 can use a transducer with a top-mounted or a side-mounted connector. It is necessary to use a transducer adapter with the transducer to examine the inspection areas from TP1 if the transducer cannot be held by hand.

A. Examine the lower skin for cracks at the fastener holes identified as fastener codes 1 thru 5 in Figure 1, View C.

(1) Calibrate the instrument as specified in Paragraph 4.

(2) Put a sufficient quantity of couplant on the transducer inspection surfaces.

(3) Increase the gain 18 dB above that set in Paragraph 4.F.

(4) Put the transducer on the inspection surface at TP1 with the front of the transducer against the R7/R8 fitting as shown in Figure 1, View C to examine the forward side of the code 1 thru 3 fastener holes for cracks.

(5) Point the transducer at the skin fastener hole to get a signal to occur on the screen display that is approximately 90% of FSW and has a minimum signal height of 20% of FSH. Add more gain if the hole signal is below 20% of FSH. Move and/or turn the transducer along the edge of the fitting in the forward and aft directions to get the maximum signal from the skin fastener hole. If the transducer is pointed at the code 3 fastener hole, the signal from the hole will occur at approximately 70% of FSW.

NOTE: Many signals can occur when the transducer is pointed at the code 1 and 2 fastener holes and one of these signals can occur at approximately 90% of FSH. Do not use a signal that can occur at 90% of FSW from one of these holes. Make sure that the signal that occurs at 90% of FSW is from the skin fastener hole.

(6) Monitor the screen display for a signal from the skin fastener hole to occur or for a crack signal that can occur between 20 and 80% of FSW. Carefully monitor the direction and position of the transducer at all times to help identify signals that occur.

(7) Put the transducer on the inspection surface at TP2 with the front of the transducer against the R7/R8 fitting as shown Figure 1, View C. The TP2 position is used to examine the aft side of the code 1 thru 3 fasteners holes and the forward side of the code 4 and 5 fastener holes for cracks.

(8) Point the transducer at the code 3 fastener hole to get a signal to occur on the screen display that is approximately 70% of FSW and has a minimum signal height of 20% of FSH. Add more gain if the hole signal is below 20% of FSH. Move and/or turn the transducer along the edge of the fitting in the forward and aft directions to get the maximum signal from the fastener hole. If the transducer is pointed at the code 2 fastener hole, the signal from the hole will occur at approximately 45% of FSW.

BOEING PROPRIETARY - Copyright © Unpublished Work - See title page for details

(9) Monitor the screen display for a signal from the code 3 fastener hole to occur or for a crack signal that can occur between 20 and 60% of FSW. Carefully monitor the direction and position of the transducer at all times to help identify signals that occur.

(10) Turn the transducer away from the code 3 fastener hole in the aft direction and monitor the screen display for a crack signal on the aft side of the hole.

(11) Continue to turn the transducer in the direction of the code 5 fastener hole and monitor the screen display for a crack signal on the forward side of the code 5 fastener hole. With the transducer pointed at the code 5 fastener hole, the signal from the hole will occur at approximately 70% of FSW.

(12) Monitor the screen display for a signal from the code 5 fastener hole to occur or for a crack signal that can occur between 40 and 80% of FSW. Carefully monitor the direction and position of the transducer at all times to help identify signals that occur.

(13) Put the transducer on the inspection surface at TP3 with the front of the transducer against the R7/R8 fitting as shown Figure 1, View C. The TP3 position is used to examine the aft side of the code 4 and 5 fasteners holes for cracks.

(14) Point the transducer at the code 5 fastener hole to get a signal to occur on the screen display that is between 45 and 50% of FSW and has a minimum signal height of 20% of FSH. Add more gain if the hole signal is below 20% of FSH. Move and/or turn the transducer along the edge of the fitting in the forward and aft directions to get the maximum signal from the fastener hole. If the transducer is pointed at the code 4 fastener hole, a signal will occur at approximately 25% of FSW.

(15) Monitor the screen display for a signal from the code 5 fastener hole to occur or for a crack signal that can occur from the code 4 fastener hole, between 20 and 30% of FSW. Carefully monitor the direction and position of the transducer at all times to help identify signals that occur.

(16) Turn the transducer away from the code 5 fastener hole in the aft direction and monitor the screen display for a crack signal on the aft side of the hole.

(17) Go to Paragraph 6.A. for instructions to help make an analysis of all possible crack signals that occur.

B. Examine the skin flange of the lower chord at the front spar for cracks at the fastener holes identified as fastener codes 1 thru 4 in Figure 1, View D.

(1) Calibrate the instrument as specified in Paragraph 4.

(2) Put a sufficient quantity of couplant on the transducer inspection surfaces shown in Figure 1, View D.

(3) Increase the gain 18 dB above that set in Paragraph 4.F.

(4) Put the transducer on the inspection surface at TP1 with the front of the transducer against the R1 fitting as shown in Figure 1, View D. The TP1 position is used to examine the forward side of the code 1 thru 3 fastener holes for cracks.

(5) Point the transducer at the skin fastener hole to get a signal to occur on the screen display that is approximately 90% of FSW and has a minimum signal height of 20% of FSH. Add more gain if the hole signal is below 20% of FSH. Move and/or turn the transducer along the edge of the fitting in the forward and aft directions to get the maximum signal from the skin fastener hole. If the transducer is pointed at the code 3 fastener hole, a signal will occur at approximately 70% of FSW.

BOEING PROPRIETARY - Copyright © Unpublished Work - See title page for details

(6) Monitor the screen display for a signal from the skin fastener hole to occur or for a crack signal that can occur between 20 and 80% of FSW. Carefully monitor the direction and position of the transducer at all times to help identify signals that occur.

(7) Put the transducer on the inspection surface at TP2 with the front of the transducer against the R1 fitting as shown Figure 1, View D. The TP2 position is used to examine the aft side of the code 1 thru 3 fasteners holes for cracks.

(8) Point the transducer at the code 3 fastener hole to get a signal to occur on the screen display that is approximately 70% of FSW and has a minimum signal height of 20% of FSH. Add more gain if the hole signal is below 20% of FSH. Move and/or turn the transducer along the edge of the fitting in the forward and aft directions to get the maximum signal from the fastener hole. If the transducer is pointed at the code 2 fastener hole, a signal will occur at approximately 45% of FSW.

(9) Monitor the screen display for a signal from the code 3 fastener hole to occur or for a crack signal that can occur between 20 and 60% of FSW. Carefully monitor the direction and position of the transducer at all times to help identify signals that occur.

(10) Turn the transducer away from the code 3 fastener hole in the aft direction and monitor the screen display for a crack signal on the aft side of the hole.

(11) Put the transducer on the inspection surface at TP3 with the front of the transducer against the R1 fitting as shown Figure 1, View D. The TP3 position is used to examine the forward and aft sides of the code 4 fastener hole for cracks.

(12) Point the transducer at the code 3 fastener hole to get a signal to occur on the screen display that is between 50 and 60% of FSW and has a minimum signal height of 20% of FSH. Add more gain if the hole signal is below 20% of FSH. Move and/or turn the transducer along the edge of the fitting in the forward and aft directions to get the maximum signal from the fastener hole. If the transducer is pointed at the code 4 fastener hole, a signal will occur at approximately 25% of FSW.

(13) Monitor the screen display for a signal from the code 3 fastener hole to occur or for a crack signal on the forward side of the code 4 fastener hole that can occur between 20 and 30% of FSW. Carefully monitor the direction and position of the transducer at all times to help identify signals that occur.

(14) Turn the transducer away from the code 4 fastener hole in the aft direction and pointed to the skin fastener. The signal from the skin fastener hole will occur between 40 and 50% of FSW.

(15) Monitor the screen display for a signal from the skin fastener hole to occur or for a crack signal on the aft side of the code 4 fastener hole that can occur between 20 and 30% of FSW. Carefully monitor the direction and position of the transducer at all times to help identify signals that occur.

(16) Go to Paragraph 6.B. for instructions to help make an analysis of all possible crack signals that occur.

C. Examine the web flange of the lower chord at the front spar for cracks at the fastener holes identified as fastener codes 1 thru 6 in Figure 1, View E.

(1) Calibrate the instrument as specified in Paragraph 4.

(2) Put a sufficient quantity of couplant on the transducer inspection surfaces.

(3) Increase the gain 12 dB above that set in Paragraph 4.F.

BOEING PROPRIETARY - Copyright © Unpublished Work - See title page for details

(4) Put the transducer on the inspection surface at TP1 with the front of the transducer against the R1 fitting and the fastener collar as shown Figure 1, View E. The TP1 position is used to examine the lower side of the code 1 and 2 fastener holes for cracks.

(5) Point the transducer at the code 2 fastener hole to get a signal to occur on the screen display that is between 40 and 50% of FSW and has a minimum signal height of 20% of FSH. Add more gain if the hole signal is below 20% of FSH. Turn the transducer in the up and down directions to get the maximum signal from the code 2 fastener hole. If the transducer is pointed at the code 1 fastener hole, a signal will occur at approximately 25% of FSW.

(6) Monitor the screen display for a signal from the code 2 fastener hole to occur or for a crack signal that can occur between 20 and 30% of FSW. Carefully monitor the direction and position of the transducer at all times to help identify signals that occur.

(7) Turn the transducer down, away from the code 2 fastener hole and monitor the screen display for a crack signal on the lower side of the hole.

(8) Put the transducer on the inspection surface at TP2 with the front of the transducer against the R1 fitting and the fastener collar as shown Figure 1, View E. The TP2 position is used to examine the upper side of the code 1 and 2 fasteners holes for cracks.

(9) Point the transducer at the code 2 fastener hole to get a signal to occur on the screen display that is approximately 40% of FSW. Turn the transducer in the up and down directions to get the maximum signal from the code 2 fastener hole. If the transducer is pointed at the code 1 fastener hole, a signal will occur at approximately 20% of FSW.

(10) Monitor the screen display for a signal from the code 2 fastener hole to occur or for a crack signal that can occur between 20 and 30% of FSW. Carefully monitor the direction and position of the transducer at all times to help identify signals that occur.

(11) Turn the transducer up, away from the code 2 fastener hole and monitor the screen display for a crack signal on the upper side of the hole.

(12) Do Paragraph 5.C.(4) thru Paragraph 5.C.(11) again at TP3 and then TP4 on the opposite side of the R1 fitting to examine the code 2 and 3 fastener holes for cracks.

(13) Do Paragraph 5.C.(4) thru Paragraph 5.C.(12) to examine the code 4 thru 6 fastener holes for cracks.

(14) Go to Paragraph 6.C. for instructions to help make an analysis of all possible crack signals that occur.

6. Inspection Results

A. For the inspections done on the lower skin as specified in Paragraph 5.A. (see Figure 1, View C).

(1) With the transducer at TP1 to examine the forward side of the code 1 thru 3 fastener holes for possible cracks, monitor the screen display as follows:

(a) A signal from one of the three fastener holes that is 40% of FSH or more (with the added 18 dB) and between 20 and 80% of FSW, is a sign of a possible crack. Make sure the signal is not caused by a fastener hole.

(b) There are no possible cracks from the forward side of the three code 1 thru 3 fasteners if a signal from the skin fastener hole occurs at approximately 90% of FSW.

(2) With the transducer at TP2 to examine the aft side of the code 1 thru 3 fastener holes and the forward side of the code 4 and 5 fastener holes for possible cracks, monitor the screen display as follows:

BOEING PROPRIETARY - Copyright © Unpublished Work - See title page for details

(a) A signal from one of the code 1 thru 3 fastener holes that is 40% of FSH or more (with the added 18 dB) and between 20 and 80% of FSW, is a sign of a possible crack. Make sure the signal is not caused by a fastener hole.

(b) There are no possible cracks from the aft side of the code 1 or 2 fastener holes if a signal from the code 3 fastener hole occurs at approximately 70% of FSW.

(c) A signal from one of the code 4 or 5 fastener holes that is 40% of FSH or more (with the added 18 dB) and between 40 and 80% of FSW, is a sign of a possible crack. Make sure the signal is not caused by a fastener hole.

(d) There is no possible crack from the forward side of the code 4 fastener hole if a signal from the code 5 fastener hole occurs at approximately 70% of FSW.

(3) With the transducer at TP3 to examine the aft side of the code 4 and 5 fastener holes for possible cracks, monitor the screen display as follows:

(a) A signal from one of the code 4 or 5 fastener holes that is 40% of FSH or more (with the added 18 dB) and between 20 and 60% of FSW, is a sign of a possible crack. Make sure the signal is not caused by a fastener hole.

(b) There is no possible crack from the aft side of the code 4 fastener hole if a signal from the code 5 fastener hole occurs between 45 and 50% of FSW.

B. For the inspections done on the skin flange of the lower chord at the front spar as specified in Paragraph 5.B. (see Figure 1, View D).

(1) With the transducer at TP1 to examine the forward side of the code 1 thru 3 fastener holes for possible cracks, monitor the screen display as follows:

(a) A signal from one of the three code 1 thru 3 fastener holes that is 40% of FSH or more (with the added 18 dB) and between 20 and 80% of FSW, is a sign of a possible crack. Make sure the signal is not caused by a fastener hole.

(b) There are no possible cracks from forward side of the three code 1 thru 3 fasteners if a signal from the skin fastener hole occurs at approximately 90% of FSW.

(2) With the transducer at TP2 to examine the aft side of the code 1 thru 3 fastener holes for possible cracks, monitor the screen display as follows:

(a) A signal from one of the code 1 thru 3 fastener holes that is 40% of FSH or more (with the added 18 dB) and between 20 and 80% of FSW, is a sign of a possible crack. Make sure the signal is not caused by fastener hole.

(b) There are no possible cracks from the aft side of the code 1 and 2 fastener holes, if a signal from the code 3 fastener hole occurs at approximately 70% of FSW.

(3) With the transducer at TP3 to examine the forward and aft sides of the code 4 fastener hole for possible cracks, monitor the screen display as follows:

(a) A signal that is 40% of FSH or more (with the added 18 dB) and between 20 and 30% of FSW, is a sign of a possible crack from the fastener hole. Make sure the signal is not caused by a fastener hole.

(b) There is no possible crack from the forward side of the code 4 fastener hole if a signal from the code 3 fastener hole occurs between 50 and 60% of FSW.

(c) There is no possible crack from the aft side of the code 4 fastener hole if a signal from the skin fastener hole occurs between 40 and 50% of FSW.

C. For the inspections done on the web flange of the lower chord at the front spar as specified in Paragraph 5.C. (see Figure 1, View E).

BOEING PROPRIETARY - Copyright © Unpublished Work - See title page for details

(1) With the transducer at TP1 to examine the lower side of the code 1 and 2 fastener holes for possible cracks, monitor the screen display as follows:

(a) A signal from the code 1 or 2 fastener holes that is 40% of FSH or more (with the added 12 dB) and between 20 and 60% of FSW, is a sign of a possible crack. Make sure the signal is not caused by a fastener hole.

(b) There is no possible crack from the aft side of the code 1 fastener hole if a signal from the code 2 fastener hole occurs at between 40 and 50% of FSW.

(2) With the transducer at TP2 to examine the upper side of the code 1 and 2 fastener holes for possible cracks, monitor the screen display as follows:

(a) A signal from the code 1 or 2 fastener holes that is 40% of FSH or more (with the added 12 dB) and between 20 and 50% of FSW, is a sign of a possible crack. Make sure the signal is not caused by a fastener hole.

(b) There is no possible crack from forward side of the code 1 fastener hole if a signal from the code 2 fastener hole occurs at approximately 40% of FSW.

(3) With the transducer at TP3 to examine the lower side of the code 2 and 3 fastener holes for possible cracks, go to Paragraph 6.C.(1) for the FSW locations to monitor for the signals (fastener hole and possible cracks) on the screen display.

(4) With the transducer at TP4 to examine the upper side of the code 2 and 3 fastener holes for possible cracks, go to Paragraph 6.C.(2) for the FSW locations to monitor for the signals (fastener hole and possible cracks) on the screen display.

(5) Use Paragraph 6.C.(1) thru Paragraph 6.C.(4) for the FSW locations to monitor for the signals (fastener hole and possible cracks) on the screen display for the code 4 thru 6 fasteners.

D. Compare all possible crack signals to the signal that you get from the notch in the reference standard.

E. Make sure the possible crack signal is not caused by too much couplant in front of the transducer.

F. Do a check of the instrument calibration to make sure the sensitivity has not changed. If the sensitivity has changed, calibrate the instrument and do the inspection again. Then make an analysis of the possible crack signals that are 40% or more of FSH.

G. At fastener holes where possible crack signals are less than 40% of FSH, try to turn and move the transducer to get the signal height to increase. This is only possible where there is sufficient access. Make a careful record of all possible cracks that are less than 40% of FSH and report this to your engineering group.

H. For possible crack signals that are 40% of FSH or more, remove the fastener and do an open hole eddy current inspection as specified in Part 6, 51-00-00, Procedure 16 to make sure there is a crack.

BOEING PROPRIETARY - Copyright © Unpublished Work - See title page for details

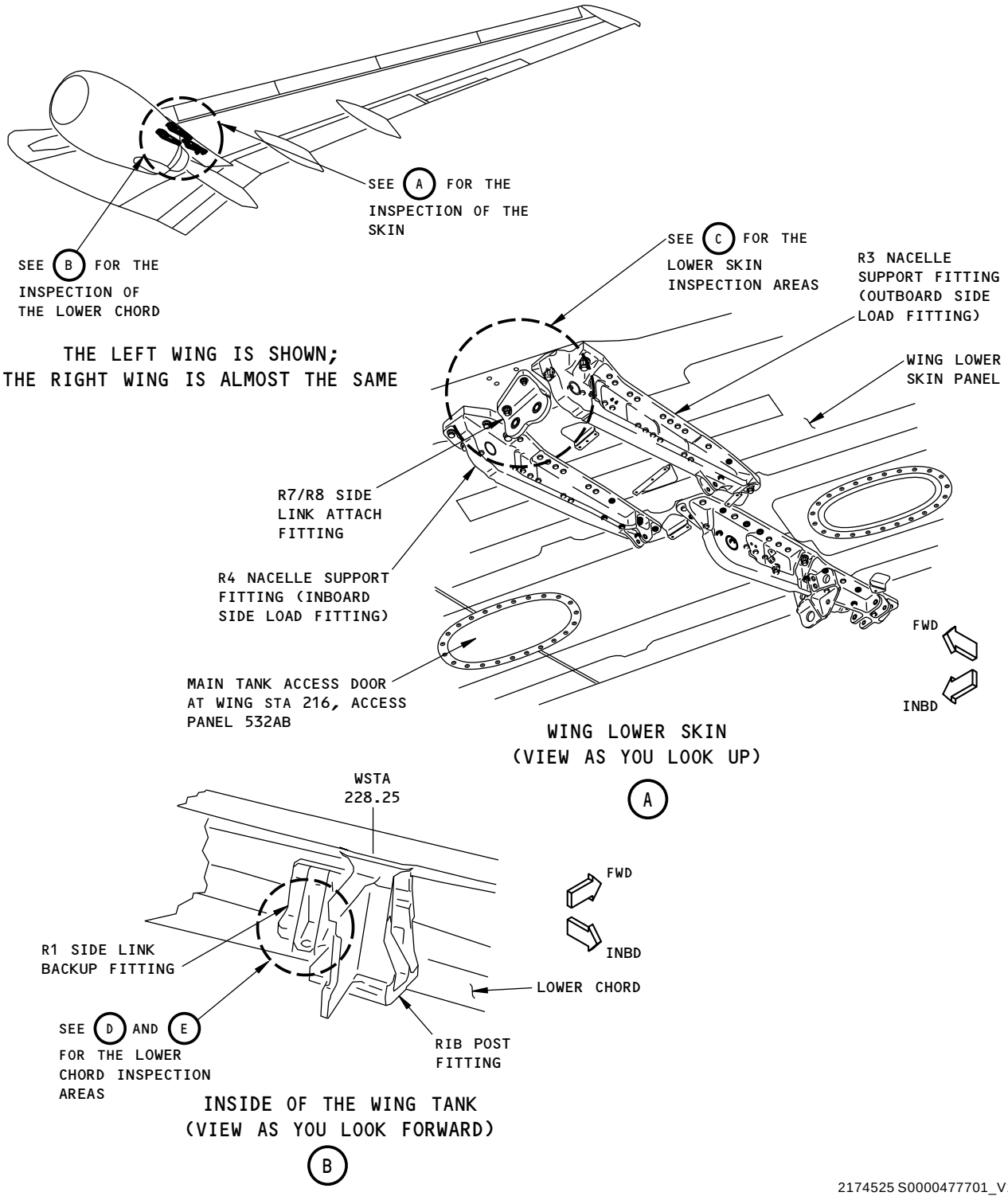

Inspection Areas
Figure 1 (Sheet 1 of 4)

BOEING PROPRIETARY - Copyright © Unpublished Work - See title page for details

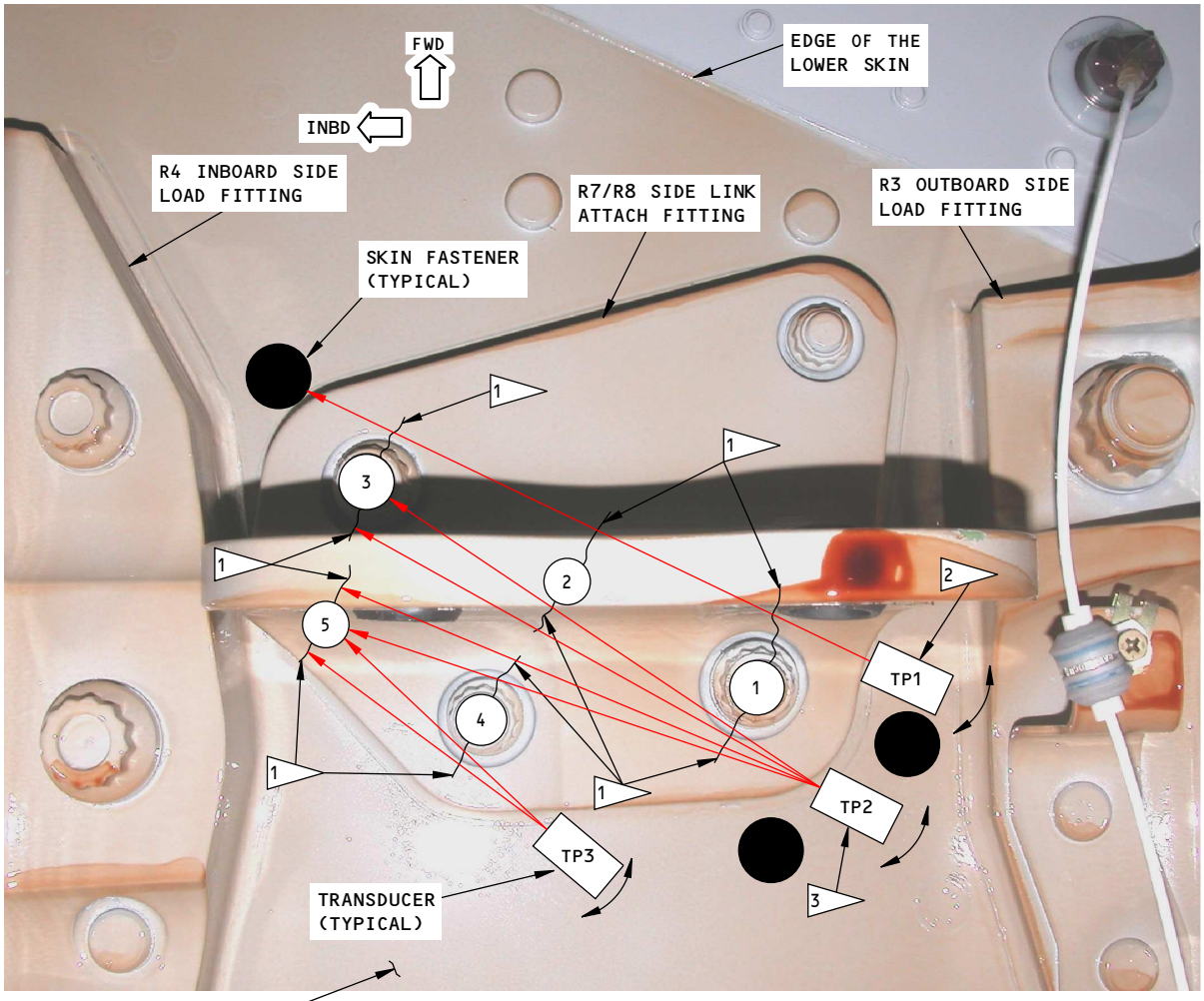

WING LOWER SKIN INSPECTION AREAS AT THE R7/R8 SIDE LINK ATTACH FITTING (VIEW AS YOU LOOK UP)

C

NOTES:

X FASTENER HOLE TO EXAMINE WHERE "X" IS THE FASTENER CODE

- TP = TRANSDUCER POSITION

1 TYPICAL CRACK DIRECTION THAT CAN OCCUR AT THE FORWARD AND AFT SIDES OF THE FASTENER HOLE.

2 IT IS NECESSARY TO USE A TRANSDUCER WITH A TOP-MOUNTED CONNECTOR AND IT IS RECOMMENDED TO USE AN ADAPTER WITH THE TRANSDUCER TO GET ACCESS TO TP1.

3 IT IS NECESSARY TO USE A TRANSDUCER WITH A SIDE-MOUNTED CONNECTOR AND IT IS RECOMMENDED TO USE AN ADAPTER WITH THE TRANSDUCER TO GET ACCESS TO TP2.

2174573 S0000477702_V1

Inspection Areas
Figure 1 (Sheet 2 of 4)

BOEING PROPRIETARY - Copyright © Unpublished Work - See title page for details

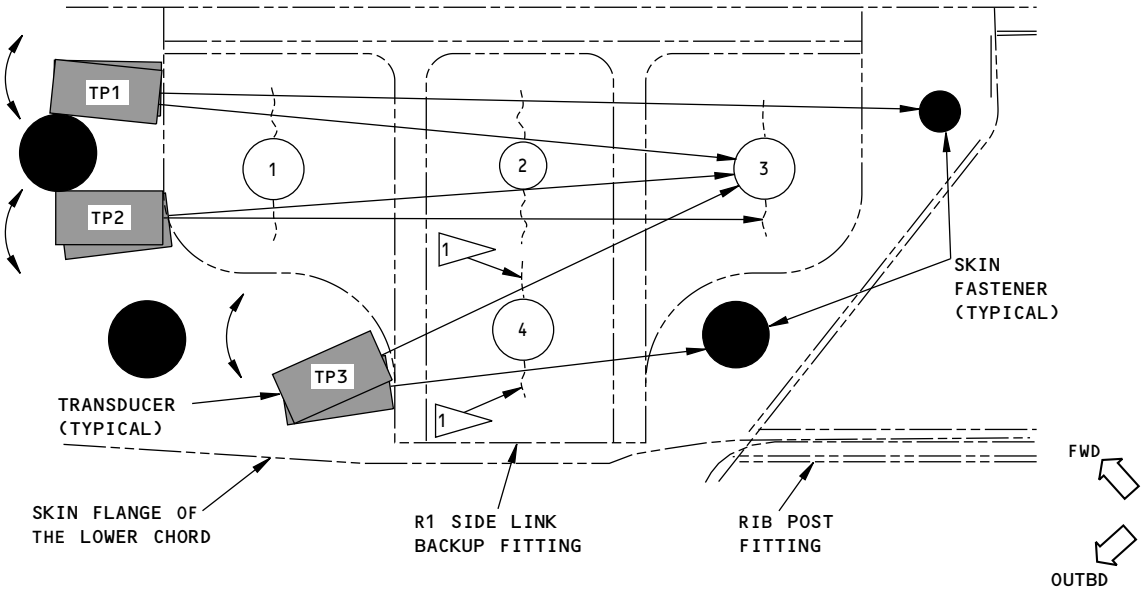

LOWER CHORD - SKIN FLANGE INSPECTION AREAS
AT THE R1 SIDE LINK BACKUP FITTING
(VIEW AS YOU LOOK DOWN)

D

2174600 S0000477703_V1

Inspection Areas
Figure 1 (Sheet 3 of 4)

BOEING PROPRIETARY - Copyright © Unpublished Work - See title page for details

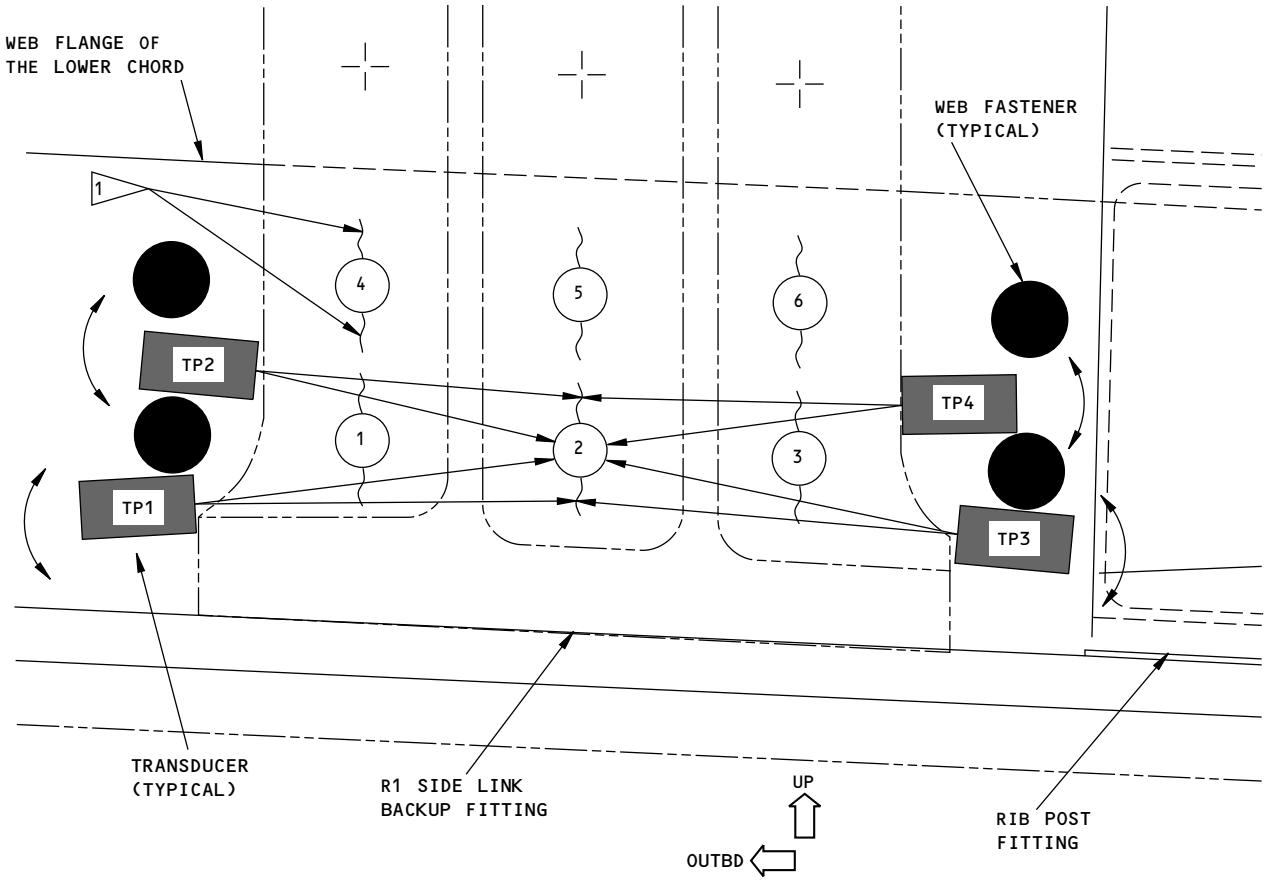

LOWER CHORD - WEB FLANGE INSPECTION AREAS
AT THE R1 SIDE LINK BACKUP FITTING
(VIEW AS YOU LOOK FORWARD)

E

NOTES:

- THE TRANSDUCER POSITIONS IN VIEW E ARE SHOWN TO EXAMINE THE LOWER FASTENER ROW (FASTENER CODES 1 THRU 3) FOR CRACKS ON THE UPPER AND LOWER SIDES OF THE HOLES. USE THE SAME TRANSDUCER POSITIONS TO EXAMINE THE UPPER FASTENER ROW (FASTENER CODES 4 THRU 6).

2174604 S0000477704_V1

Inspection Areas
Figure 1 (Sheet 4 of 4)

BOEING PROPRIETARY - Copyright © Unpublished Work - See title page for details

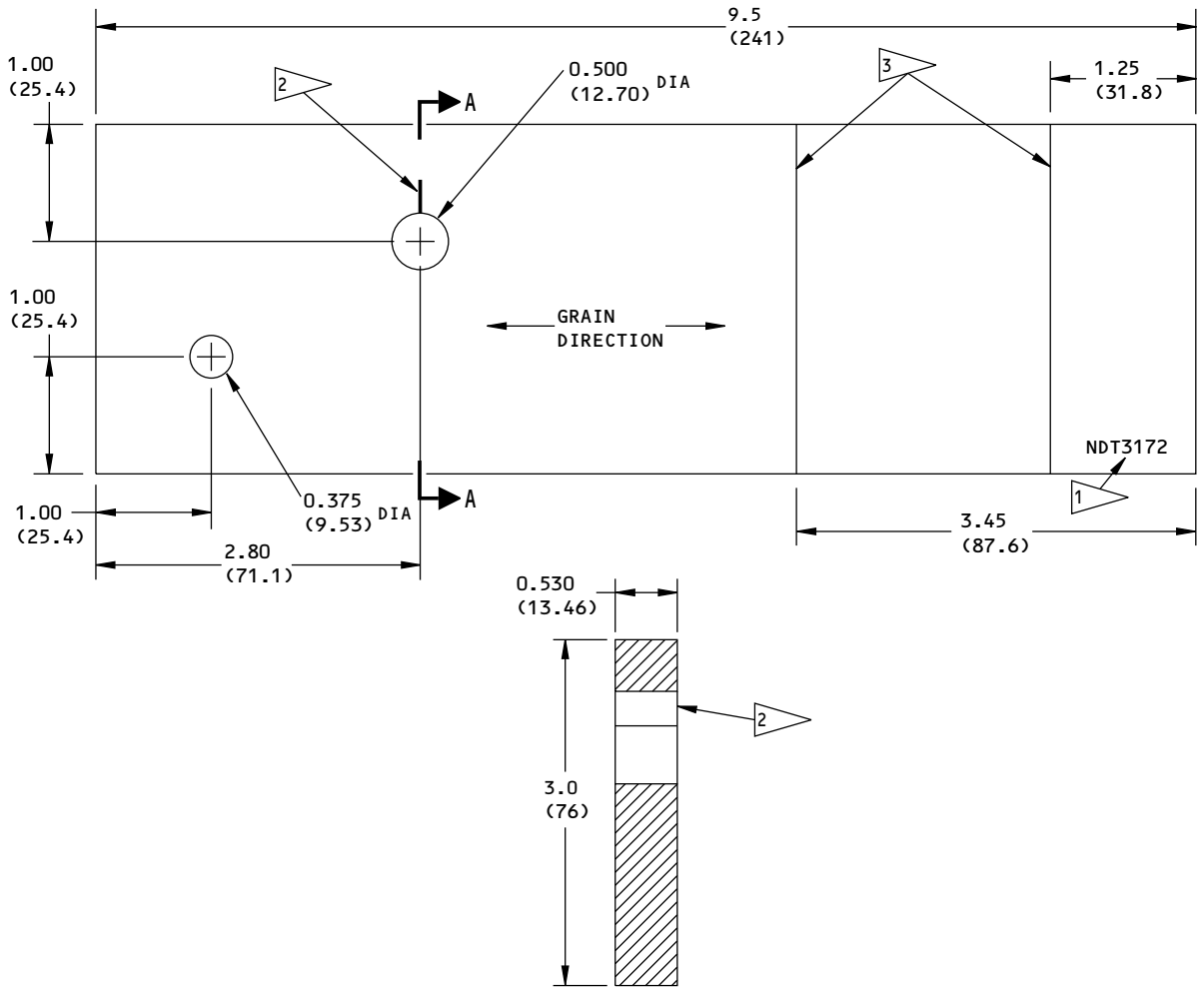

NOTES:

- ALL DIMENSIONS ARE IN INCHES (MILLIMETERS ARE IN PARENTHESES)
- TOLERANCE (UNLESS SPECIFIED DIFFERENTLY):

INCHES	MILLIMETERS
X.XXX = ±0.010	X.XX = ±0.2
X.XX = ±0.025	X.X = ±0.5
X.X = ±0.050	X = ±1

- MATERIAL: AIRPLANE QUALITY ALUMINUM
- SURFACE ROUGHNESS: 63 Ra OR BETTER

1 ETCH, ENGRAVE OR STAMP THE REFERENCE STANDARD NUMBER, NDT3172, AT APPROXIMATELY THIS LOCATION.

2 EDM NOTCH LOCATION AND TOLERANCE:
THE NOTCH MUST BE WITHIN ±0.005 (0.10) OF THE CENTERLINE OF THE HOLE AS SHOWN.

NOTCH DIMENSIONS AND TOLERANCE:
WIDTH - 0.010 (0.3) ±0.002 (0.05)
LENGTH - 0.300 (7.62)
DEPTH - FULL PART THICKNESS

3 ETCH OR SCRIBE A LINE TO IDENTIFY THE TRANSDUCER POSITION FOR THE INSTRUMENT CALIBRATION.

2174608 S0000477705_V1

Reference Standard NDT3172
Figure 2

BOEING PROPRIETARY - Copyright © Unpublished Work - See title page for details

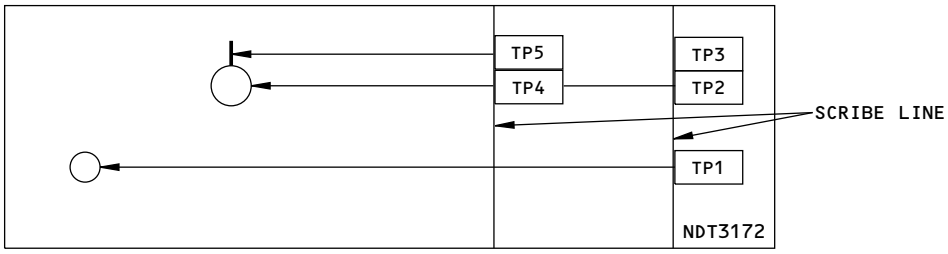

TRANSDUCER LOCATIONS ON REFERENCE STANDARD NDT3172

DETAIL I

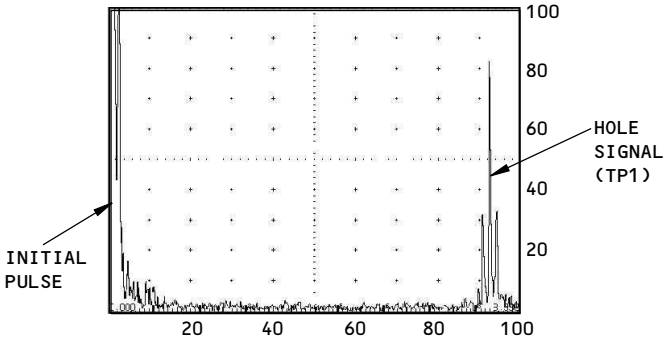

HOLE SIGNAL (TP1)

DETAIL II

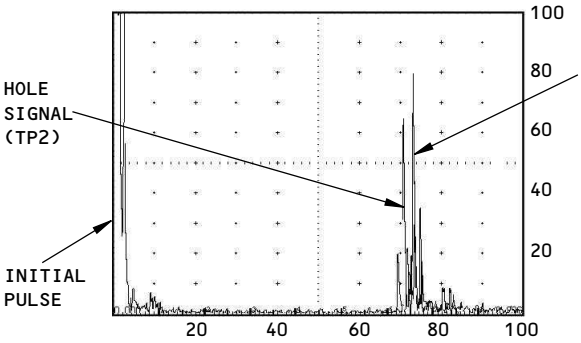

HOLE SIGNAL (TP2) AND NOTCH SIGNAL (TP3)

DETAIL III

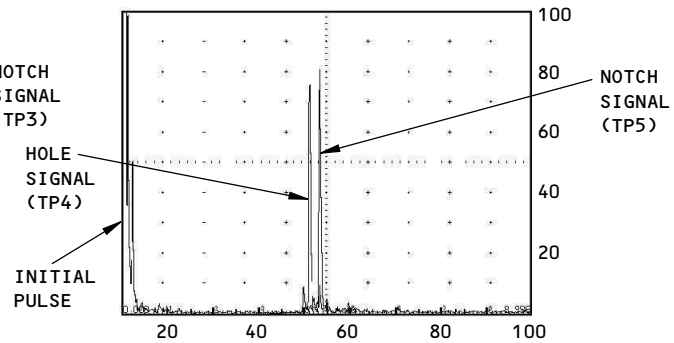

HOLE SIGNAL (TP4) AND NOTCH SIGNAL (TP5)

DETAIL IV

NOTES:

- TP = TRANSDUCER POSITION
- THE SCREEN DISPLAYS IN DETAILS III AND IV SHOW THE NOTCH SIGNAL WITH THE HOLE SIGNAL TO SHOW THE TYPICAL SEPARATION BETWEEN THE TWO SIGNALS. THE SIGNALS CAN LOOK DIFFERENT WITH OTHER INSTRUMENT AND TRANSDUCER MIXES.

2174612 S0000477706_V1

Instrument Calibration
Figure 3

BOEING PROPRIETARY - Copyright © Unpublished Work - See title page for details

PART 4 - ULTRASONIC

WING LOWER SKIN AT THE R2, R3 AND R4 NACELLE SUPPORT FITTINGS

1. Purpose

A. Use this procedure to find cracks in the wing lower skin where the R2, R3 and R4 nacelle support fittings are attached. See Figure 1.

B. This inspection procedure examines the wing lower skin for cracks on the forward and aft sides of the fastener holes where the R2, R3 and R4 nacelle support fittings are attached to the wing lower skin.

C. All inspections are done from the lower surface of the wing lower skin. See Figure 1, Views A, B and C for the inspection areas.

D. This procedure uses four 5 MHz transducers that can put shear waves in aluminum to examine all of the inspection areas. It is necessary to use all four transducers identified in Paragraph 2.C. to examine all 737-800/-900 airplanes. It is only necessary to use the transducers identified in Paragraph 2.C.(1) thru Paragraph 2.C.(3) to examine all 737-600/-700 airplanes. Figure 1 identifies the applicable transducer to use and where to position it.

NOTE: It will be necessary to identify the inspection areas where there are height and width access limits. Use the applicable mounted connector transducer that will examine the inspection area.

E. This procedure uses two reference standards. It is necessary to use reference standards NDT3170 and NDT3171, identified in Paragraph 2.E., to examine all of the inspection areas for all 737-800/-900 airplanes. It is only necessary to use reference standard NDT3170, identified in Paragraph 2.E.(1), to examine all of the inspection areas for all 737-600/-700 airplanes.

F. 737 Maintenance Planning Document (MPD) Damage Tolerance Rating (DTR) Check Form Reference:

(1) Item: 57-20-09

2. Equipment

A. General

(1) Use ultrasonic equipment that can be calibrated on the reference standards specified in Paragraph 4.

(2) Refer to Part 1, 51-01-00, for data about the equipment manufacturers.

B. Instrument - Use an ultrasonic instrument that can:

(1) Operate in the frequency range of 4 to 6 MHz.

(2) Be calibrated as specified in the calibration instructions of this procedure. The instruments that follow were used to help prepare this procedure.

(a) Sonic 1200; Staveley Instruments, Inc.

(b) USM Go; GE inspection Technologies

C. Transducers - Use the 5 MHz transducers that follow:

(1) Use a transducer that puts a 70 degree shear wave in aluminum, with a 0.250 inch (6.35 mm) element and with a side-mounted connector. The case dimensions must not be more than 0.75 inches (19 mm) in length by 0.40 inches (10.1 mm) in width by 0.60 inches (15.2 mm) in height. The transducers that follow were used to help prepare this procedure.

(a) MA-705S; Techna NDT

(b) SUM-570AS; Olympus NDT

BOEING PROPRIETARY - Copyright © Unpublished Work - See title page for details

(2) Use a transducer that puts a 70 degree shear wave in aluminum, with a 0.250 inch (6.35 mm) element and with a top-mounted connector. The case dimensions must not be more than 0.75 inches (19 mm) in length by 0.40 inches (10.1 mm) in width by 0.60 inches (15.2 mm) in height. The transducers that follow were used to help prepare this procedure.

(a) MA-705T; Techna NDT

(b) SUM-570AT; Olympus NDT

(3) Use a transducer that puts a 70 degree shear wave in aluminum, with a 0.375 inch (9.52 mm) element and with a top or side-mounted connector. The case dimension width must not be more than 0.50 inches (12.7 mm) wide. The transducer that follows was used to help prepare this procedure.

(a) LA-570S (side-mount); Techna NDT

(4) Use a transducer that puts a 60 degree shear wave in aluminum, with a 0.250 inch (6.35 mm) element and with a side-mounted connector. The case dimensions must not be more than 0.75 inches (19.1 mm) in length by 0.40 inches (10.1 mm) in width by 0.60 inches (15.2 mm) in height. The transducers that follow were used to help prepare this procedure.

(a) MA-605S; Techna NDT

(b) SUM-560AS; Olympus NDT

D. Transducer Adapter - It is recommended to use a flexible adapter to hold the transducer at inspection areas where it is not easy to access the inspection area. The transducer adapters that follow were used to help prepare this procedure.

(1) MFLXR-6 (right-angle); Techna NDT

(2) MFLX-6 (straight); Techna NDT

E. Reference Standard - Use the reference standards that follow:

(1) Use reference standard NDT3170 for all inspection areas where a 70 degree transducer is used on all 737-600/-700/-800/-900 airplanes. See Figure 2 for the reference standard drawing.

(2) Use reference standard NDT3171 for all inspection areas where a 60 degree transducer is used on all 737-800/-900 airplanes. See Figure 3 for the reference standard drawing.

F. Couplant - Use an ultrasonic couplant that will not damage the airplane structure.

3. Prepare for the Inspection

A. Remove the strut aft fairing and the thrust reverser fairings (431EL, 431ER) (on the inboard side only) to get access to examine all the lower skin inspection areas.

B. Identify all the inspection areas. Clean and, if necessary, remove sealant from all the inspection surfaces where the transducer will be put. It is not necessary to remove the fillet seal that is around the outer edges of the nacelle support fittings. See Figure 1, Views A, B and C for the transducer positions. If the surface is rough, make it smooth by approved procedures. It is not necessary to remove paint unless it is loose.

C. Figure 1 identifies areas where a skin fastener is near, above or in front of the transducer. These fasteners can block the sound beam. Visually examine these areas carefully and identify those fastener locations. Some skin fasteners below the rub strip can be in front of the transducer.

BOEING PROPRIETARY - Copyright © Unpublished Work - See title page for details

4. **Instrument Calibration**

A. The calibration instructions in Paragraph 4.A.(1) thru Paragraph 4.A.(4) are used to examine all of the fastener holes identified in Figure 1, Views A, B and C for 737-600/-700/-800/-900 airplanes. The calibration instructions in Paragraph 4.A.(5) are only used to examine the fastener holes identified as T5 in Figure 1, flagnote 3 for 737-800/-900 airplanes.

(1) Calibrate the instrument to examine the fastener holes that are identified as transducer 1 (T1), as shown in Figure 1.

(a) Connect a transducer specified in Paragraph 2.C.(1) to the instrument.

(b) Set the instrument frequency between 4 and 6 MHz, if a broadband instrument is not used.

(c) Put a sufficient quantity of couplant on step “A” of reference standard NDT3170 at TP1 and TP2. See Detail I in Figure 4.

(d) Put the transducer at TP1 with the sound beam pointed at the hole. See Detail I in Figure 4.

1) Make sure the front of the transducer is on the scribe line and that the sound beam is pointed in the direction of the hole.

2) Adjust the instrument gain, delay and range controls as necessary to get a signal from the hole to occur on the screen display.

3) Move and turn the transducer along the scribe line as necessary to get a maximum signal from the hole.

(e) Adjust the instrument delay and range controls to get the signal from the hole set to 50% of full screen width (FSW) with the initial pulse set to 0%. See the screen display in Detail II in Figure 4.

(f) Slowly move the transducer to TP2 with the sound beam pointed at the notch and monitor the signal from the notch. Make sure the front of the transducer is always on the scribe line. See Detail I in Figure 4.

1) The notch signal will come into view and increase in height a short distance to the right of the hole signal as the transducer is moved away from the hole.

2) Move the transducer along the scribe line, away from the hole, to get the maximum signal from the notch and adjust the instrument gain to get the notch signal to 80% of full screen height (FSH). See the screen display in Detail II in Figure 4.

NOTE: Do not use reject.

3) Record the instrument gain that will be used to do the inspection.

4) Monitor the distance the transducer moves from the hole to where the maximum signal height from the notch is found.

5) Move the transducer back to TP1 and continue to move it to the opposite side of the hole until the signal is gone. Monitor the distance the transducer is moved from TP1 to where the signal is gone.

(g) Record or, if possible, save the calibration setup that will be used to examine the inspection areas with this transducer.

(2) Calibrate the instrument to examine the three fastener holes that are identified as transducer T2 as shown in Figure 1, Views A and B only.

(a) Connect a transducer specified in Paragraph 2.C.(2) to the instrument.

(b) Do Paragraph 4.A.(1)(b) thru Paragraph 4.A.(1)(d) again, but use TP3 and TP4 on step “B” of reference standard NDT3170. See Detail I in Figure 4.

BOEING PROPRIETARY - Copyright © Unpublished Work - See title page for details

(c) Adjust the instrument delay and range controls to get the signal from the hole set to 50% of FSW with the initial pulse set to 0%. See the screen display in Detail III in Figure 4.

(d) Slowly move the transducer to TP4 with the sound beam pointed at the notch and monitor the signal from the notch. Make sure the front of the transducer is always on the scribe line. See Detail I in Figure 4.

1) The notch signal will come into view and increase in height a short distance to the right of the hole signal as the transducer is moved away from the hole.

2) Move the transducer along the scribe line, away from the hole, to get the maximum signal from the notch and adjust the instrument gain to get the notch signal to 80% of FSH. See the screen display in Detail III in Figure 4.

NOTE: Do not use reject.

3) Record the instrument gain that will be used to do the inspection.

4) Monitor the distance the transducer moves from the hole to where the maximum signal height from the notch is found.

5) Move the transducer back to TP3 and continue to move it to the opposite side of the hole until the signal is gone. Monitor the distance the transducer is moved from TP3 to where the signal is gone.

(e) Record or, if possible, save the calibration setup for use to examine the inspection areas with this transducer.

(3) Calibrate the instrument to examine the fastener holes that are identified as transducer T3 as shown in Figure 1, Views A and B.

(a) Connect the transducer specified in Paragraph 2.C.(3) to the instrument.

(b) Set the instrument frequency between 4 and 6 MHz, if a broadband instrument is not used.

(c) Put a sufficient quantity of couplant on step “A” of reference standard NDT3170 at TP5 and TP6. See Detail IV in Figure 4.

(d) Put the transducer at TP5 with the sound beam pointed at the hole. See Detail IV in Figure 4.

1) Make sure the front of the transducer is on the scribe line and that the sound beam is pointed in the direction of the hole.

2) Adjust the instrument gain, delay and range controls as necessary to get a signal from the hole to occur on the screen display.

3) Move and turn the transducer along the scribe line as necessary to get a maximum signal from the hole.

(e) Adjust the instrument delay and range controls to get the signal from the hole set to 80% of FSW with the initial pulse set to 0%. See the screen display in Detail V in Figure 4.

(f) Slowly move the transducer to TP6 with the sound beam pointed at the notch and monitor the signal from the notch. Make sure the front of the transducer is always on the scribe line. See Detail IV in Figure 4.

1) The notch signal will come into view and increase in height a short distance to the right of the hole signal as the transducer is moved away from the hole.

2) Move the transducer along the scribe line, away from the hole, to get the maximum signal from the notch and adjust the instrument gain to get the notch signal to 80% of FSH. See the screen display in Detail V in Figure 4.

NOTE: Do not use reject.

BOEING PROPRIETARY - Copyright © Unpublished Work - See title page for details

3) Record the instrument gain that will be used to do the inspection.

4) Monitor the distance the transducer moves from the hole to where the maximum signal height from the notch is found.

5) Move the transducer back to TP5 and continue to move it to the opposite side of the hole until the signal is gone. Monitor the distance the transducer is moved from TP5 to where the signal is gone.

(g) Record or, if possible, save the calibration setup for use to examine the inspection areas with this transducer.

(4) Calibrate the instrument to examine the two fastener holes that are identified as transducer T4 as shown in Figure 1, View A.

(a) Do Paragraph 4.A.(3)(a) thru Paragraph 4.A.(3)(d) again, but use TP7 and TP8 and step “B” of reference standard NDT3170. See Detail IV in Figure 4.

(b) Adjust the instrument delay and range controls to get the signal from the hole set to 70% of FSW with the initial pulse set to 0%. See the screen display in Detail VI in Figure 4.

(c) Slowly move the transducer to TP8 with the sound beam pointed at the notch and monitor the signal from the notch. Make sure the front of the transducer is always on the scribe line. See Detail IV in Figure 4.

1) The notch signal will come into view and increase in height a short distance to the right of the hole signal as the transducer is moved away from the hole.

2) Move the transducer along the scribe line, away from the hole, to get the maximum signal from the notch and adjust the instrument gain to get the notch signal to 80% of FSH. See the screen display in Detail VI in Figure 4.

NOTE: Do not use reject.

3) Record the instrument gain that will be used to do the inspection.

4) Monitor the distance the transducer moves from the hole to where the maximum signal height from the notch is found.

5) Move the transducer back to TP7 and continue to move it to the opposite side of the hole until the signal is gone. Monitor the distance the transducer is moved from TP7 to where the signal is gone.

(d) Record or, if possible, save the calibration setup for use to examine the inspection areas with this transducer.

(5) Calibrate the instrument to examine the fastener holes that are identified as transducer T5 as specified in Figure 1, flagnote 3.

(a) Connect a transducer specified in Paragraph 2.C.(4) to the instrument.

(b) Set the instrument frequency between 4 and 6 MHz, if a broadband instrument is not used.

(c) Put a sufficient quantity of couplant on reference standard NDT3171 at TP1 and TP2. See Detail I in Figure 5.

(d) Put the transducer at TP1 with the sound beam pointed at the hole. See Detail I in Figure 5.

1) Make sure the front of the transducer is on the scribe line and that the sound beam is pointed in the direction of the hole.

2) Adjust the instrument gain, delay and range controls as necessary to get a signal from the hole to occur on the screen display.

3) Move and turn the transducer along the scribe line as necessary to get a maximum signal from the hole.

BOEING PROPRIETARY - Copyright © Unpublished Work - See title page for details

(e) Adjust the instrument delay and range controls to get the signal from the hole set to 70% of FSW with the initial pulse set to 0%. See the screen display in Detail II in Figure 5.

(f) Slowly move the transducer to TP2 with the sound beam pointed at the notch and monitor the signal from the notch. Make sure the front of the transducer is always on the scribe line. See Detail I in Figure 5.

1) The notch signal will come into view and increase in height a short distance to the right of the hole signal as the transducer is moved away from the hole.

2) Move the transducer along the scribe line, away from the hole, to get the maximum signal from the notch and adjust the instrument gain to get the notch signal to 80% of FSH. See the screen display in Detail II in Figure 5.

NOTE: Do not use reject.

3) Record the instrument gain that will be used to do the inspection.

4) Monitor the distance the transducer moves from the hole to where the maximum signal height from the notch is found.

5) Move the transducer back to TP1 and continue to move it to the opposite side of the hole until the signal is gone. Monitor the distance the transducer is moved from TP1 to where the signal is gone.

(g) Record or, if possible, save the calibration setup for use to examine the inspection areas with this transducer.

5. Inspection Procedure

A. The inspection instructions in Paragraph 5.A.(1) thru Paragraph 5.A.(4) are used to examine all the fastener holes identified in Figure 1, Views A, B and C for 737-600/-700/-800/-900 airplanes. The inspection instructions in Paragraph 5.A.(5) are only used to examine the fastener holes identified as T5 in Figure 1, flagnote 3 for 737-800/-900 airplanes.

(1) Examine the fastener holes that are identified as transducer T1 as shown in Figure 1. The fastener holes identified with flagnote 3 in Figure 1, Views A and C, use transducer T1 for the 737-600/-700 airplanes only.

(a) Calibrate the instrument as specified in Paragraph 4.A.(1).

(b) Put a sufficient quantity of couplant on the transducer inspection surfaces.

(c) Increase the gain 12 dB above the recorded gain set in Paragraph 4.A.(1)(f)3).

(d) Put the transducer on the inspection surface with the front of the transducer against, or as near as possible to, the fitting as shown in Figure 1.

(e) Point the transducer to the fastener hole to get a signal to occur on the screen display that is between 50 and 90% of FSW and at a minimum signal height of 20% of FSH. Add more gain if the hole signal is below 20% of FSH.

NOTE: Make sure the transducer is not above a skin fastener.

NOTE: It is possible to have multiple signals from the hole.

(f) Make a scan on each side of the fastener hole as follows:

1) Move and/or turn the transducer along the edge of the fitting, away from the hole. Also move the transducer away from the edge of the fitting in the inboard or outboard direction as much as 0.5 inches (13 mm) if possible.

2) As you move the transducer away from the hole, monitor the screen display for a possible crack signal to occur between 50 and 100% of FSW.

BOEING PROPRIETARY - Copyright © Unpublished Work - See title page for details

3) The signal from the fastener hole will decrease quickly as the transducer is turned away. Look for a signal that will occur immediately to the right of the hole signal as you move and/or turn the transducer.

4) Carefully monitor the direction and position of the transducer at all times to help identify signals that occur.

NOTE: Compare the distance the transducer was moved from the fastener hole during calibration with the distance the transducer is moved during the inspection to help identify possible cracks.

(g) Do Paragraph 5.A.(1)(d) thru Paragraph 5.A.(1)(f) again to examine all the remaining T1 fastener holes.

(h) Go to Paragraph 6. for instructions to help make an analysis of all possible crack signals that occur.

(2) Examine the three fastener holes that are identified as transducer T2 as shown in Figure 1, Views A and B only, as follows:

(a) Examine the one fastener hole of the R4 nacelle support fitting, View A, that is adjacent to the side link attach fitting (R7/R8) and the two most forward fastener holes of the R3 nacelle support fitting, View B, as follows:

1) Calibrate the instrument as specified in Paragraph 4.A.(2) with a transducer identified in Paragraph 2.C.(2). It is recommended to use a right-angle transducer adapter, identified in Paragraph 2.D., to help hold and position the transducer during the inspection.

2) Put a sufficient quantity of couplant on the transducer inspection surfaces.

3) Increase the gain 12 dB above the recorded gain set in Paragraph 4.A.(2)(d)3).

4) Put the transducer on the inspection surface shown in Figure 1, View A, with the front of the transducer against, or as near as possible to, the fitting.

5) Point the transducer to the fastener hole to get a signal to occur on the screen display that is between 50 and 70% of FSW and at a minimum signal height of 20% of FSH. Add more gain if the signal is below 20% of FSH.

NOTE: It is possible to have multiple signals from the hole.

6) Make a scan on each side of the fastener hole as follows:

a) As you move the transducer away from the hole, monitor the screen display for a possible crack signal to occur between 50 and 90% of FSW.

b) The signal from the fastener hole will decrease quickly as the transducer is turned away. Look for a signal that will occur immediately to the right of the hole signal as you move and/or turn the transducer.

c) Carefully monitor the direction and position of the transducer at all times to help identify signals that occur.

NOTE: Compare the distance the transducer was moved from the fastener hole during calibration with the distance the transducer is moved during the inspection to help identify possible cracks.

7) Examine the two fastener holes shown in Figure 1, View B as follows:

a) Put the transducer at the approximate locations shown, with the front of the transducer against the fitting.

b) Make a scan in the forward direction as far forward as possible and monitor the screen display for a possible crack signal to occur between 50 and 90% of FSW.

BOEING PROPRIETARY - Copyright © Unpublished Work - See title page for details

8) Go to Paragraph 6. for instructions to help make an analysis of all possible crack signals that occur.

(3) Examine the fastener holes that are identified as transducer T3 as shown in Figure 1, Views A and B.

(a) Calibrate the instrument as specified in Paragraph 4.A.(3).

(b) Put a sufficient quantity of couplant on the transducer inspection surfaces.

(c) Increase the gain 12 dB above the gain recorded in Paragraph 4.A.(3)(f)3).

(d) Put the transducer on the inspection surface with the front of the transducer against the outer edge of the rub strip as shown in Figure 1, Views A and B.

(e) Point the transducer to the fastener hole to get a signal to occur on the screen display that is between 60 and 90% of FSW and at a minimum signal height of 20% of FSH. Add more gain if the hole signal is below 20% of FSH.

NOTE: Make sure the transducer is not above a skin fastener.

NOTE: It is possible to have multiple signals from the hole.

(f) Make a scan on each side of the fastener hole as follows:

1) Move and/or turn the transducer along the edge of the fitting, away from the hole. Also move the transducer away from the edge of the fitting in the inboard or outboard direction as much as 0.5 inches (13 mm) if possible.

2) As you move the transducer away from the hole, monitor the screen display for a possible crack signal to occur between 60 and 100% of FSW.

3) The signal from the fastener hole will decrease quickly as the transducer is turned away. Look for a signal that will occur immediately to the right of the hole signal as you move and/or turn the transducer.

4) Carefully monitor the direction and position of the transducer at all times to help identify signals that occur.

NOTE: Compare the distance the transducer was moved from the fastener hole during calibration with the distance the transducer is moved during the inspection to help identify possible cracks.

(g) Do Paragraph 5.A.(3)(d) thru Paragraph 5.A.(3)(f) again to examine all the remaining T3 fastener holes.

(h) Go to Paragraph 6. for instructions to help make an analysis of all possible crack signals that occur.

(4) Examine the two fastener holes that are identified as transducer T4 as shown in Figure 1, View A.

(a) Calibrate the instrument as specified in Paragraph 4.A.(4).

(b) Put a sufficient quantity of couplant on the transducer inspection surfaces.

(c) Increase the gain 12 dB above the gain recorded in Paragraph 4.A.(4)(c)3).

(d) Put the transducer on the inspection surface with the front of the transducer against the outer edge of the rub strip as shown Figure 1, View A.

(e) Point the transducer to the fastener hole to get a signal to occur on the screen display that is between 50 and 80% of FSW and at a minimum signal height of 20% of FSH. Add more gain if the hole signal is below 20% of FSH.

NOTE: Make sure the transducer is not above a skin fastener.

NOTE: It is possible to have multiple signals from the hole.

BOEING PROPRIETARY - Copyright © Unpublished Work - See title page for details

(f) Make a scan on each side of the fastener hole as follows:

1) Move and/or turn the transducer along the edge of the fitting, away from the hole. Also move the transducer away from the edge of the fitting in the inboard or outboard direction as much as 0.5 inches (13 mm) if possible.

2) As you move the transducer away from the hole, monitor the screen display for a possible crack signal to occur between 50 and 90% of FSW.

3) The signal from the fastener hole will decrease quickly as the transducer is turned away. Look for a signal that will occur immediately to the right of the hole signal as you move and/or turn the transducer.

4) Carefully monitor the direction and position of the transducer at all times to help identify signals that occur.

NOTE: Compare the distance the transducer was moved from the fastener hole during calibration with the distance the transducer is moved during the inspection to help identify possible cracks.

(g) Do Paragraph 5.A.(4)(d) thru Paragraph 5.A.(4)(f) again to examine the other T4 fastener hole.

(h) Go to Paragraph 6. for instructions to help make an analysis of all possible crack signals that occur.

(5) To examine the fastener holes identified with flagnote 3 in Figure 1, Views A and C for 737-800/-900 airplanes only, use transducer identification T5.

(a) Calibrate the instrument as specified in Paragraph 4.A.(5).

(b) Put a sufficient quantity of couplant on the transducer inspection surfaces.

(c) Increase the gain 12 dB above the gain recorded in Paragraph 4.A.(5)(f)3).

(d) Put the transducer on the inspection surface with the front of the transducer against, or as near as possible to, the fitting as shown in Figure 1, Views A and C.

(e) Point the transducer to the fastener hole to get a signal to occur on the screen display that is between 50 and 80% of FSW and at a minimum signal height of 20% of FSH. Add more gain if the hole signal is below 20% of FSH.

NOTE: Make sure the transducer is not above a skin fastener.

NOTE: It is possible to have multiple signals from the hole.

(f) Make a scan on each side of the fastener hole or on the side of the hole where there is access for the transducer as follows:

1) Move and/or turn the transducer along the edge of the fitting, away from the hole. Also move the transducer away from the edge of the fitting in the inboard or outboard direction as much as 0.5 inches (13 mm) if possible.

2) As you move the transducer away from the hole, monitor the screen display for a possible crack signal to occur between 50 and 90% of FSW.

3) The signal from the fastener hole will decrease quickly as the transducer is turned away. Look for a signal that will occur immediately to the right of the hole signal as you move and/or turn the transducer.

BOEING PROPRIETARY - Copyright © Unpublished Work - See title page for details

4) Carefully monitor the direction and position of the transducer at all times to help identify signals that occur.

NOTE: Compare the distance the transducer was moved from the fastener hole during calibration with the distance the transducer is moved during the inspection to help identify possible cracks.

(g) Do Paragraph 5.A.(5)(d) thru Paragraph 5.A.(5)(f) again to examine all T5 fastener holes.

(h) Go to Paragraph 6. for instructions to help make an analysis of all possible crack signals that occur.

6. Inspection Results

A. For the inspections done as specified in Paragraph 5.A.(1) at the fastener holes identified as transducer T1.

(1) A signal that is 40% of FSH or more (with the added gain) and between 50 and 100% of FSW, is a possible crack.

B. For the inspections done as specified in Paragraph 5.A.(2) at the fastener holes identified as transducer T2 (with flagnote 2).

(1) A signal that is 40% of FSH or more (with the added gain) and between 50 and 90% of FSW, is a possible crack.

C. For the inspections done as specified in Paragraph 5.A.(3) at the fastener holes identified as transducer T3.

(1) A signal that is 40% of FSH or more (with the added gain) and between 60 and 100% of FSW, is a possible crack.

D. For the inspections done as specified in Paragraph 5.A.(4) at the fastener holes identified as transducer T4.

(1) A signal that is 40% of FSH or more (with the added gain) and between 50 and 90% of FSW, is a possible crack.

E. For the inspections done as specified in Paragraph 5.A.(5) at the fastener holes identified as transducer T5.

(1) A signal that is 40% of FSH or more (with the added gain) and between 50 and 90% of FSW, is a possible crack.

F. Compare all possible cracks signals to the signal that you get from the notch in the reference standard. Compare the distance the transducer was moved from the fastener hole during calibration with the distance the transducer is moved during the inspection to help identify possible cracks.

G. Do a check of the instrument calibration to make sure the sensitivity has not changed. If the sensitivity has changed, calibrate the instrument again and then make an analysis of the possible crack signals again that are 40% of FSH or more.

H. At fastener holes where possible crack signals are less than 40% of FSH, try to turn and move the transducer to get the signal height to increase. This is only possible where there is sufficient access. Make a careful record of all possible cracks that are less than 40% of FSH and report this to your engineering group.

I. For possible crack signals that are 40% of FSH or more, remove the fastener and do an open hole eddy current inspection as specified in Part 6, 51-00-00, Procedure 16 to make sure there is a crack.

BOEING PROPRIETARY - Copyright © Unpublished Work - See title page for details

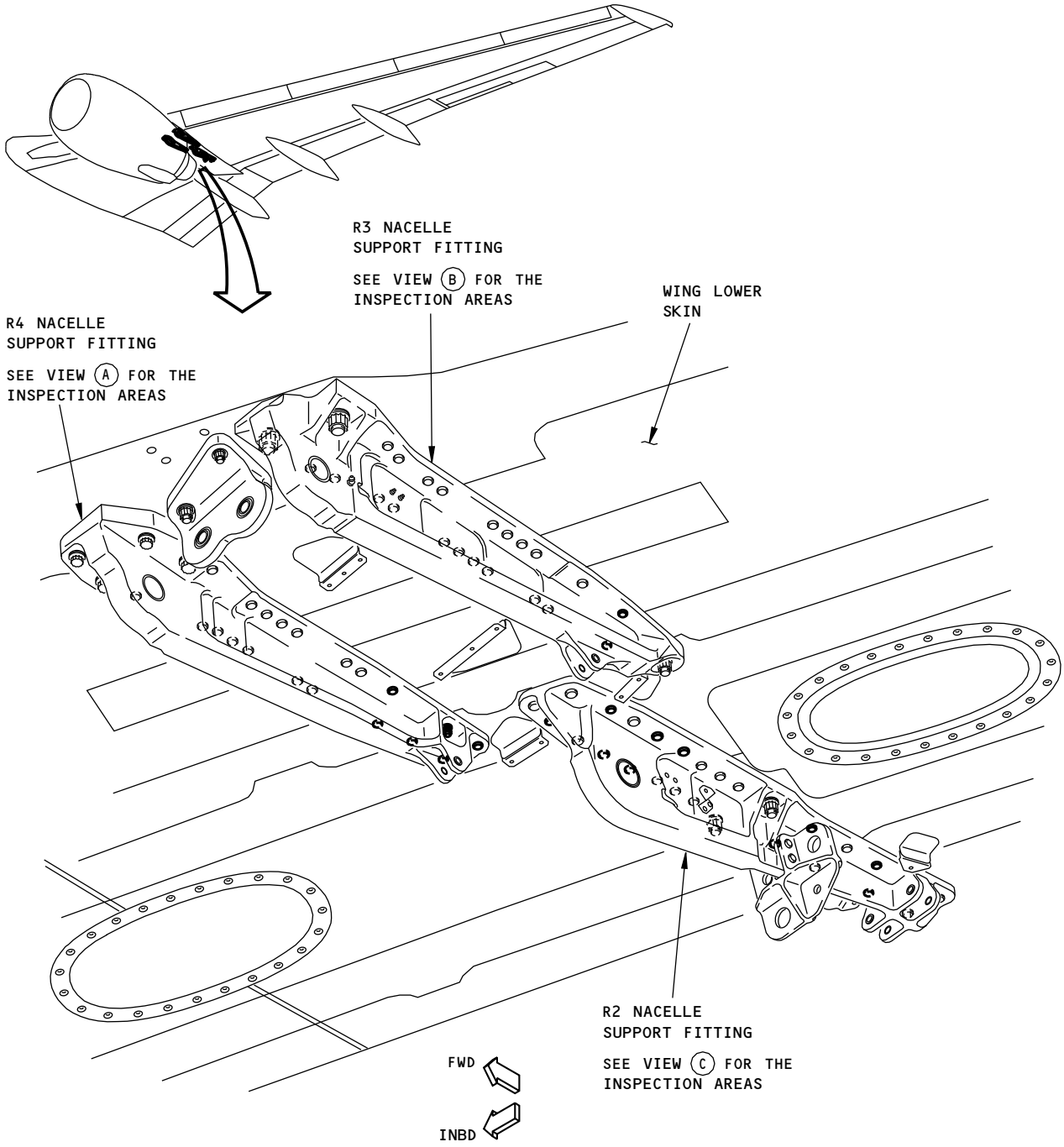

THE LEFT WING IS SHOWN;
THE RIGHT WING IS
ALMOST THE SAME

2174757 S0000477617_V1

Wing Lower Skin at the R2, R3 and R4 Nacelle Support Fittings
Figure 1 (Sheet 1 of 5)

BOEING PROPRIETARY - Copyright © Unpublished Work - See title page for details

NOTES:

● FASTENER LOCATIONS TO EXAMINE

THERE ARE SKIN FASTENERS IN THIS AREA THAT CAN BLOCK THE SOUND BEAM. VISUALLY EXAMINE THIS AREA TO IDENTIFY THE LOCATION OF THE FASTENERS. SOME FASTENERS CANNOT BE SEEN BECAUSE THE RUB STRIP IS ABOVE THEM.

- TRANSDUCER IDENTIFICATION FOR CALIBRATION AND INSPECTION DATA:

T1 CALIBRATE AS SPECIFIED IN PARAGRAPH 4.A.(1) AND EXAMINE AS SPECIFIED IN PARAGRAPH 5.A.(1).

T2 CALIBRATE AS SPECIFIED IN PARAGRAPH 4.A.(2) AND EXAMINE AS SPECIFIED IN PARAGRAPH 5.A.(2).

T3 CALIBRATE AS SPECIFIED IN PARAGRAPH 4.A.(3) AND EXAMINE AS SPECIFIED IN PARAGRAPH 5.A.(3).

T4 CALIBRATE AS SPECIFIED IN PARAGRAPH 4.A.(4) AND EXAMINE AS SPECIFIED IN PARAGRAPH 5.A.(4).

T5 CALIBRATE AS SPECIFIED IN PARAGRAPH 4.A.(5) AND EXAMINE AS SPECIFIED IN PARAGRAPH 5.A.(5).

1 PUT THE TRANSDUCER BETWEEN THE OUTER FASTENER ROW AND THE EDGE OF THE SKIN.

2 MOVE THE TRANSDUCER IN THE FORWARD DIRECTION AS FAR AS POSSIBLE.

3 USE TRANSDUCER IDENTIFICATION T1 TO EXAMINE 737-600/-700 AIRPLANES.
USE TRANSDUCER IDENTIFICATION T5 TO EXAMINE 737-800/-900 AIRPLANES.

2174758 S0000477618_V1

Wing Lower Skin at the R2, R3 and R4 Nacelle Support Fittings
Figure 1 (Sheet 2 of 5)

BOEING PROPRIETARY - Copyright © Unpublished Work - See title page for details

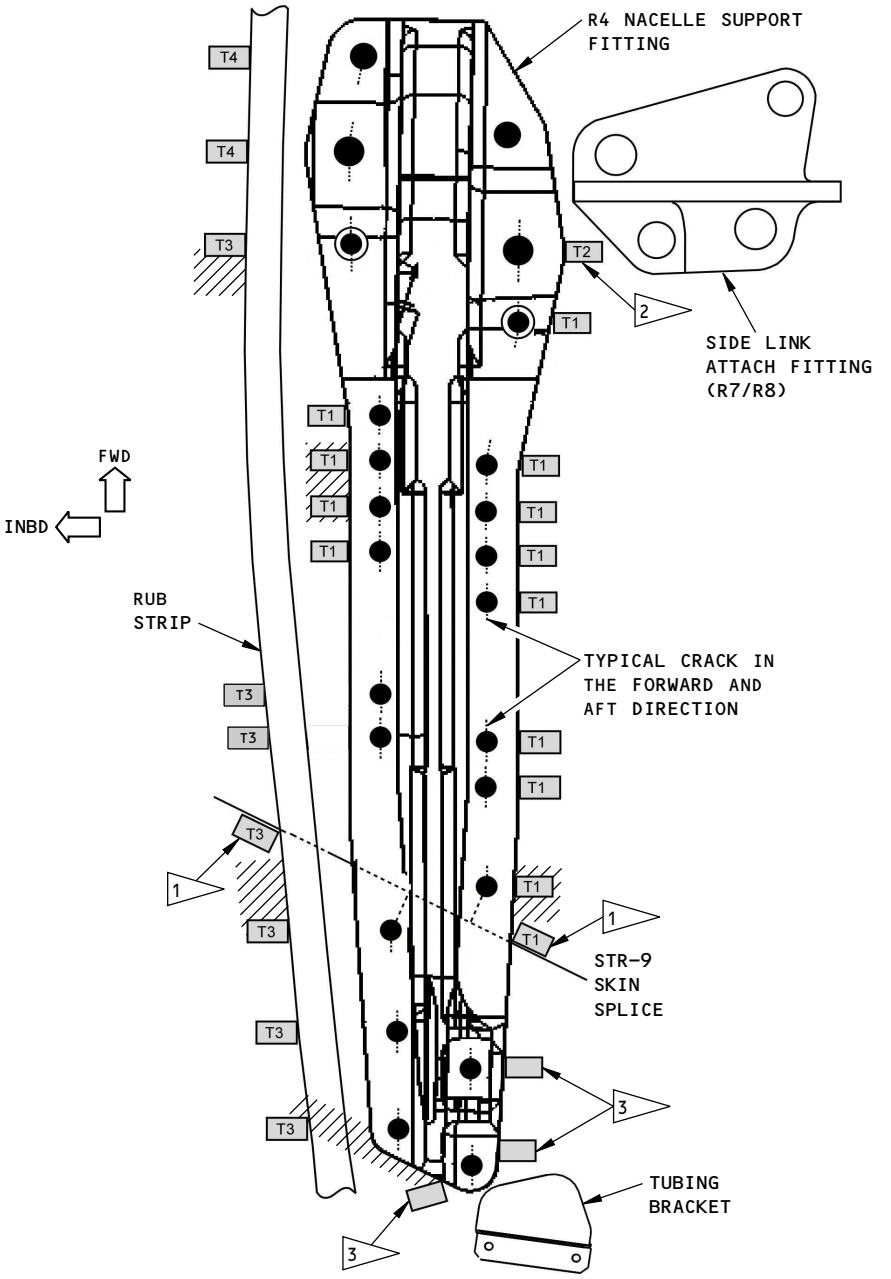

INSPECTION AREAS OF THE R4 NACELLE SUPPORT FITTING
THE LOWER VIEW OF THE LEFT WING IS SHOWN;
THE LOWER VIEW OF THE RIGHT WING IS ALMOST THE SAME

A

2174759 S0000477619_V2

Wing Lower Skin at the R2, R3 and R4 Nacelle Support Fittings
Figure 1 (Sheet 3 of 5)

BOEING PROPRIETARY - Copyright © Unpublished Work - See title page for details

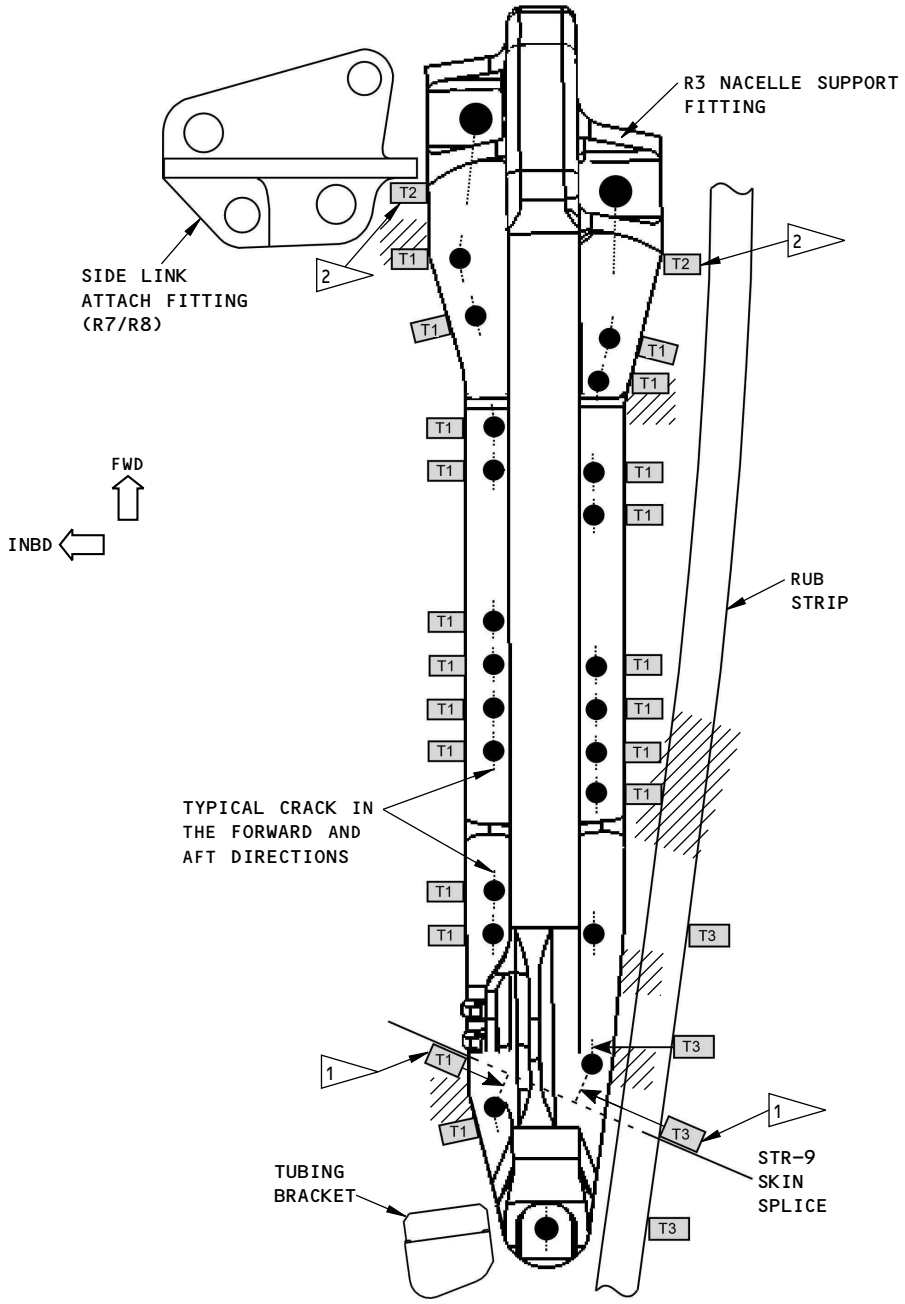

INSPECTION AREAS OF THE R3 NACELLE SUPPORT FITTING

THE LOWER VIEW OF THE LEFT WING IS SHOWN;
THE LOWER VIEW OF THE RIGHT WING IS ALMOST THE SAME

B

2174760 S0000477620_V1

Wing Lower Skin at the R2, R3 and R4 Nacelle Support Fittings
Figure 1 (Sheet 4 of 5)

BOEING PROPRIETARY - Copyright © Unpublished Work - See title page for details

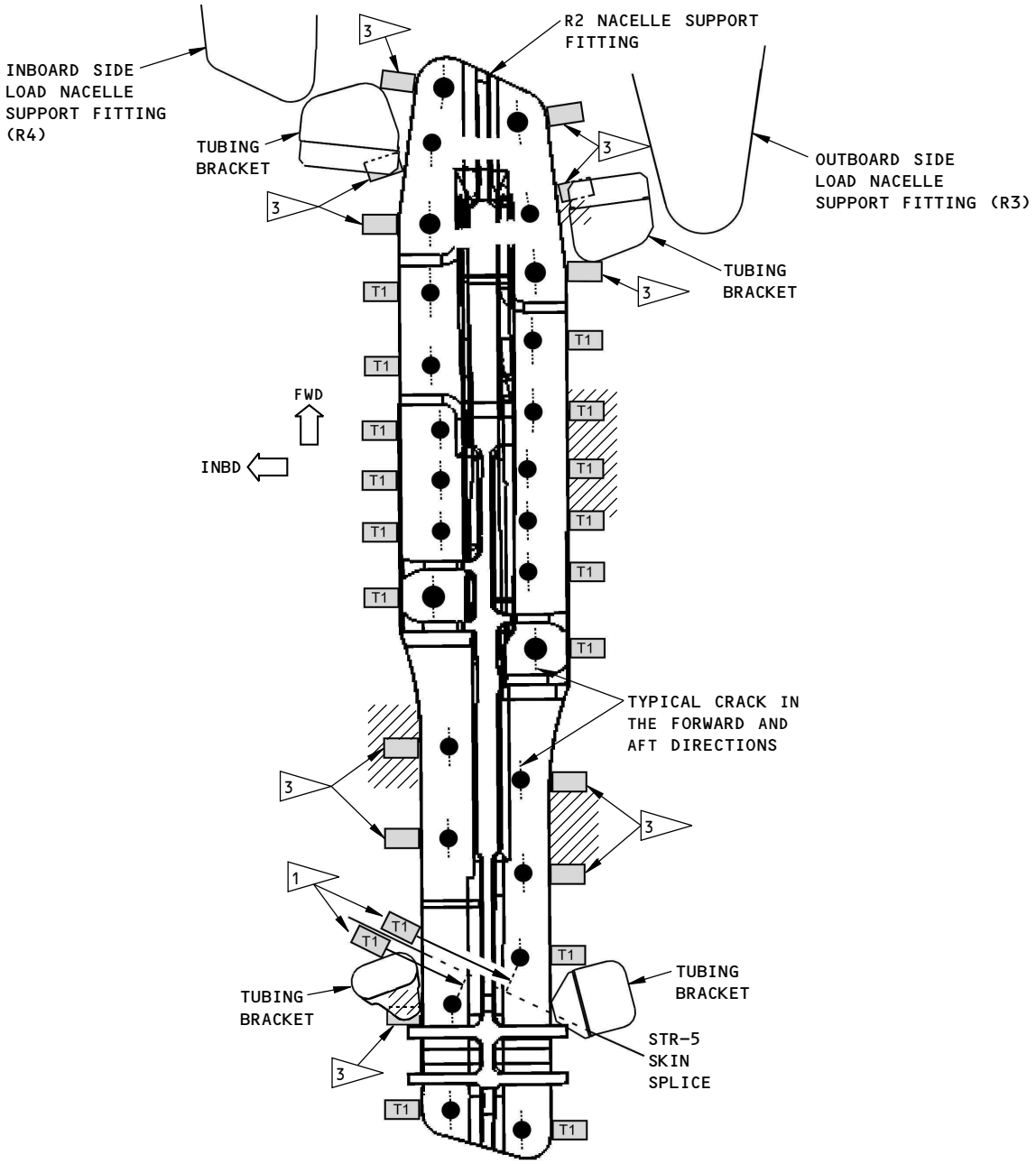

INSPECTION AREAS OF THE R2 NACELLE SUPPORT FITTING

THE LOWER VIEW OF THE LEFT WING IS SHOWN;
THE LOWER VIEW OF THE RIGHT WING IS ALMOST THE SAME

C

2174761 S0000477621_V1

Wing Lower Skin at the R2, R3 and R4 Nacelle Support Fittings
Figure 1 (Sheet 5 of 5)

BOEING PROPRIETARY - Copyright © Unpublished Work - See title page for details

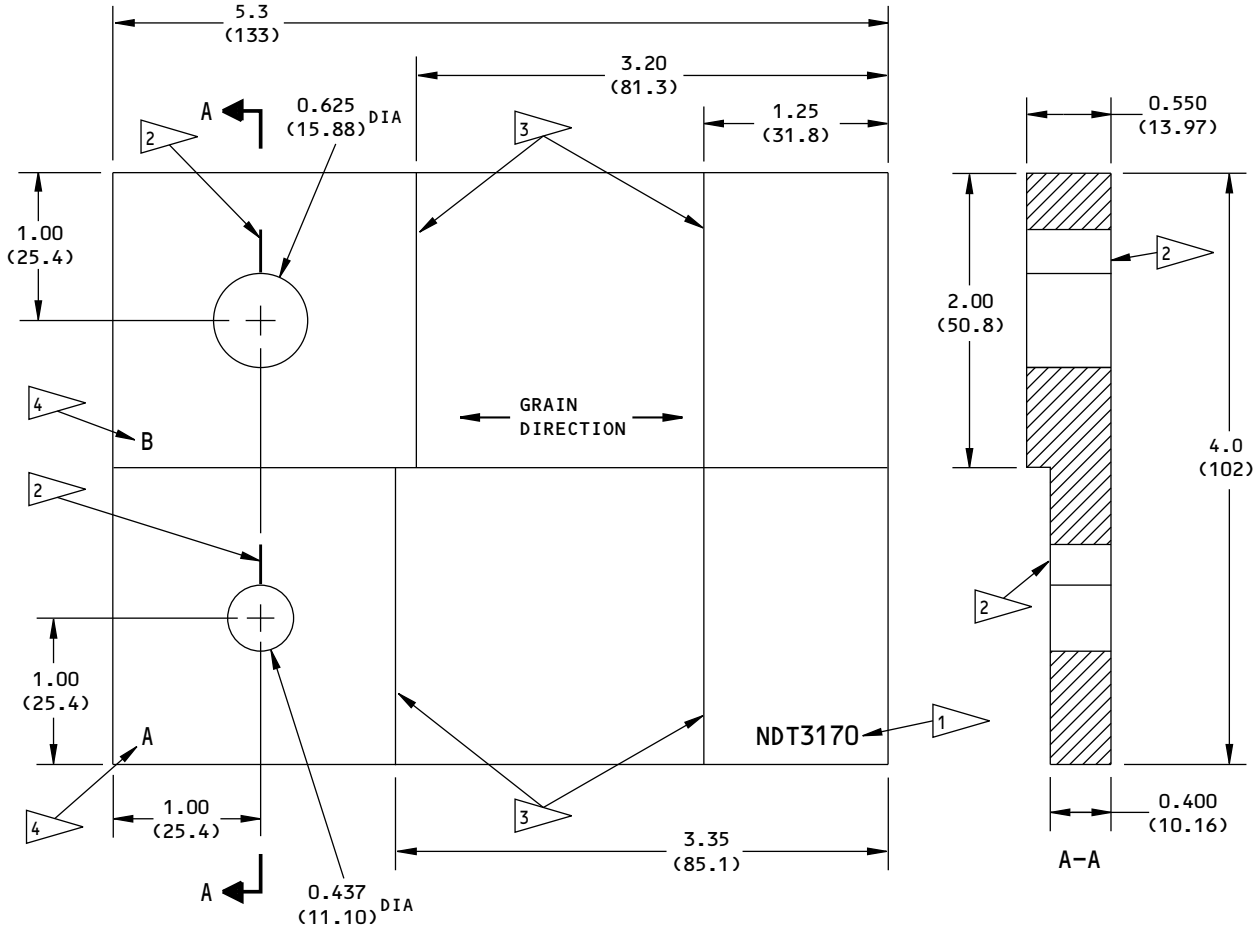

NOTES:

- ALL DIMENSIONS ARE IN INCHES (MILLIMETERS ARE IN PARENTHESES)
- TOLERANCE (UNLESS SPECIFIED DIFFERENTLY):

INCHES	MILLIMETERS
X.XXX = ±0.010	X.XX = ±0.2
X.XX = ±0.025	X.X = ±0.5
X.X = ±0.050	X = ±1

- SURFACE ROUGHNESS: 63 Ra OR BETTER
- MATERIAL: AIRCRAFT QUALITY ALUMINUM

1 ETCH, ENGRAVE OR STAMP THE REFERENCE STANDARD NUMBER, NDT3170, AT APPROXIMATELY THIS LOCATION.

2 EDM NOTCH LOCATION AND TOLERANCE: THE NOTCH MUST BE WITHIN ±0.005 (0.10) OF THE CENTERLINE OF THE HOLE AS SHOWN.

NOTCH DIMENSIONS AND TOLERANCE:
WIDTH = 0.010 (0.3) ±0.002 (0.05)
LENGTH = 0.300 (7.62)
DEPTH = FULL PART THICKNESS

3 ETCH OR SCRIBE A LINE TO IDENTIFY THE TRANSDUCER POSITION FOR THE INSTRUMENT CALIBRATION.

4 ETCH OR ENGRAVE THE LETTER TO IDENTIFY THE STEP TO POSITION THE TRANSDUCER DURING THE INSTRUMENT CALIBRATION.

2174762 S0000477622_V1

Reference Standard NDT3170
Figure 2

BOEING PROPRIETARY - Copyright © Unpublished Work - See title page for details

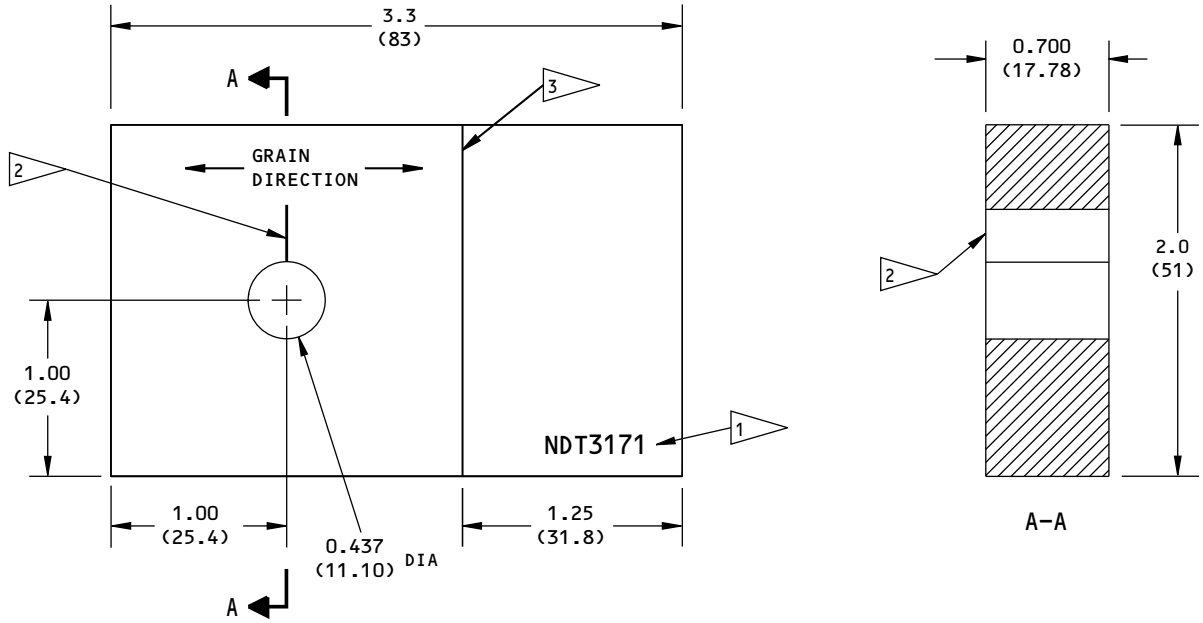

NOTES:

- ALL DIMENSIONS ARE IN INCHES (MILLIMETERS ARE IN PARENTHESES)
- TOLERANCE (UNLESS SPECIFIED DIFFERENTLY):

INCHES	MILLIMETERS
X.XXX = ±0.010	X.XX = ±0.2
X.XX = ±0.025	X.X = ±0.5
X.X = ±0.050	X = ±1

- SURFACE ROUGHNESS: 63 Ra OR BETTER
- MATERIAL: AIRCRAFT QUALITY ALUMINUM

1 ETCH, ENGRAVE OR STAMP THE REFERENCE STANDARD NUMBER, NDT3171, AT APPROXIMATELY THIS LOCATION.

2 EDM NOTCH LOCATION AND TOLERANCE: THE NOTCH MUST BE WITHIN ±0.005 (0.10) OF THE CENTERLINE OF THE HOLE AS SHOWN.

NOTCH DIMENSIONS AND TOLERANCE:
WIDTH = 0.010 (0.3) ±0.002 (0.05)
LENGTH = 0.300 (7.62)
DEPTH = FULL PART THICKNESS

3 ETCH OR SCRIBE A LINE TO IDENTIFY THE TRANSDUCER POSITION FOR THE INSTRUMENT CALIBRATION.

2174763 S0000477623_V1

Reference Standard NDT3171
Figure 3

BOEING PROPRIETARY - Copyright © Unpublished Work - See title page for details

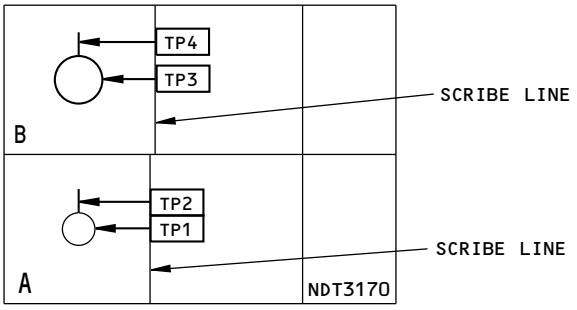

TRANSDUCER POSITIONER LOCATIONS
ON REFERENCE STANDARD NDT3170
DETAIL I

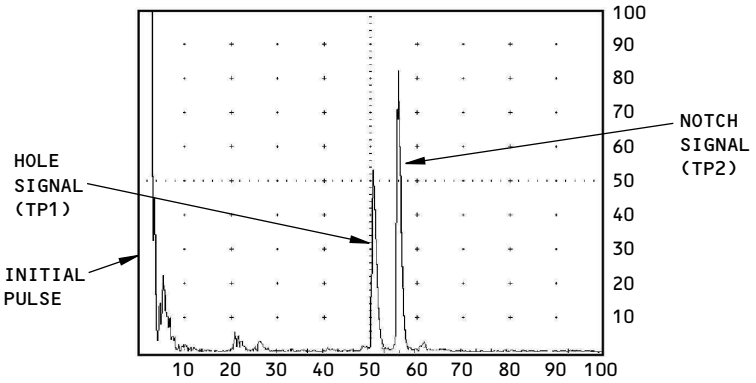

HOLE SIGNAL (TP1) AND NOTCH SIGNAL (TP2)
SIGNAL DISPLAY
DETAIL II

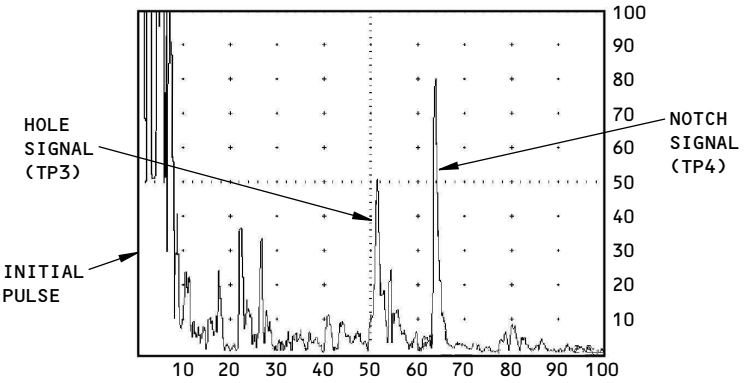

HOLE SIGNAL (TP3) AND NOTCH SIGNAL (TP4)
SIGNAL DISPLAY
DETAIL III

NOTES:

- TP = TRANSDUCER POSITION
- THE SCREEN DISPLAYS IN DETAILS II, III, V AND VI SHOW THE NOTCH SIGNAL WITH THE HOLE SIGNAL TO SHOW THE TYPICAL SEPARATION BETWEEN THE TWO SIGNALS. THE SIGNALS CAN LOOK DIFFERENT WITH OTHER INSTRUMENT AND TRANSDUCER MIXES.

2174764 S0000477624_V1

Instrument Calibration with a 70 Degree Transducer
Figure 4 (Sheet 1 of 2)

BOEING PROPRIETARY - Copyright © Unpublished Work - See title page for details

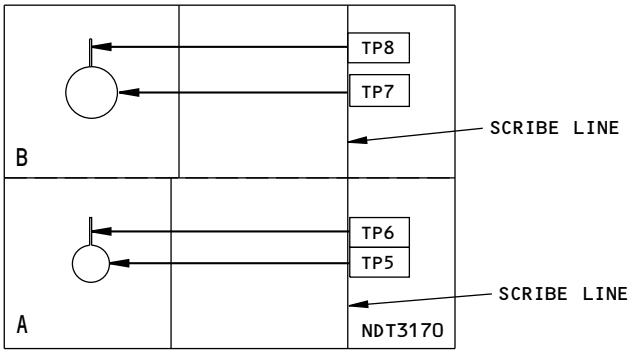

TRANSDUCER POSITIONER LOCATIONS
ON REFERENCE STANDARD NDT3170
DETAIL IV

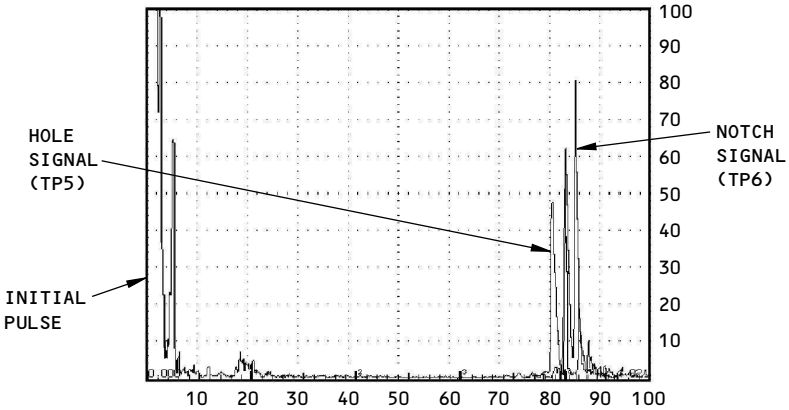

HOLE SIGNAL (TP5) AND NOTCH SIGNAL (TP6)
SIGNAL DISPLAY
DETAIL V

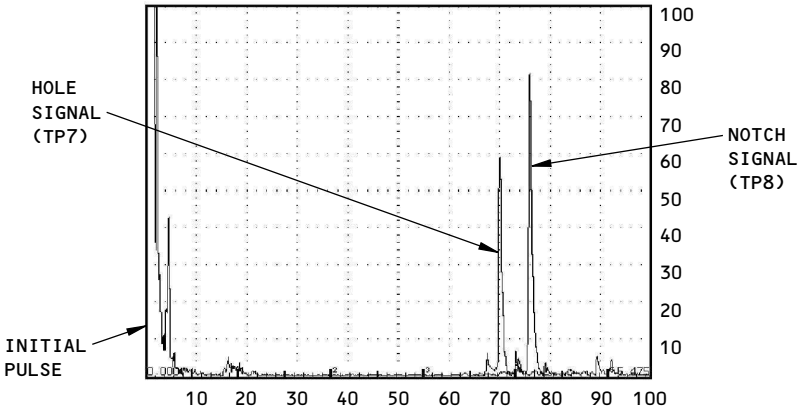

HOLE SIGNAL (TP7) AND NOTCH SIGNAL (TP8)
SIGNAL DISPLAY
DETAIL VI

2174765 S0000477625_V1

Instrument Calibration with a 70 Degree Transducer
Figure 4 (Sheet 2 of 2)

BOEING PROPRIETARY - Copyright © Unpublished Work - See title page for details

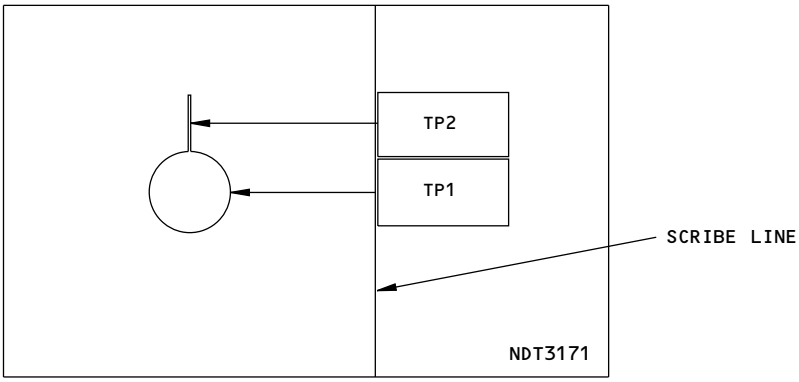

TRANSDUCER POSITIONER LOCATIONS
ON REFERENCE STANDARD NDT3171
DETAIL I

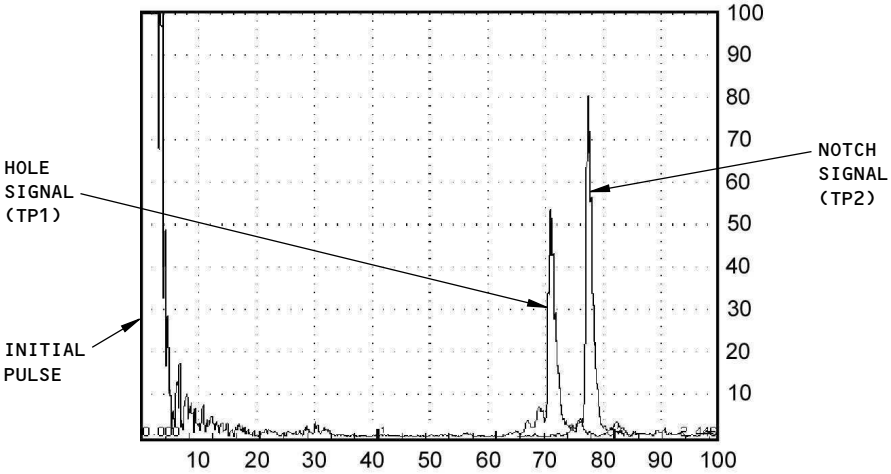

HOLE SIGNAL (TP1) AND NOTCH SIGNAL (TP2)
SIGNAL DISPLAY
DETAIL II

NOTES:

- TP = TRANSDUCER POSITION
- THE SCREEN DISPLAY IN DETAIL II SHOWS THE NOTCH SIGNAL WITH THE HOLE SIGNAL TO SHOW THE TYPICAL SEPARATION BETWEEN THE TWO SIGNALS. THE SIGNALS CAN LOOK DIFFERENT WITH OTHER INSTRUMENT AND TRANSDUCER MIXES.

2174766 S0000477626_V1

Instrument Calibration with a 60 Degree Transducer
Figure 5

BOEING PROPRIETARY - Copyright © Unpublished Work - See title page for details

PART 4 - ULTRASONIC

OUTER WING - RAIL AND SPLICE STRINGERS AT THE WING LOWER SKIN

1. Purpose

A. Use this procedure to help examine aluminum rail stringers 6 and 8 at ribs 5, 8 and 22, and aluminum splice stringers 5 and 9 at ribs 5 and 8 for cracks at fastener locations that are sealed with sealant. See Figure 1 for the inspection areas.

B. 737 Maintenance Planning Document (MPD) Damage Tolerance Record (DTR) Check Form References:

(1) Item: 57-20-02-2

(2) Item: 57-20-02-5

(3) Item: 57-20-03-3

2. Equipment

A. General

(1) All ultrasonic equipment that can be calibrated as specified in Paragraph 4. can be used to do this inspection.

(2) Refer to Part 1, 51-01-00, for data about the equipment manufacturers.

B. Instrument

(1) Use an ultrasonic instrument that:

(a) Operates in the pulse-echo mode.

(b) Operates in a frequency range of 4 to 6 MHz.

NOTE: Broadband instruments can be used if they can be calibrated as specified in this procedure.

(2) The instrument that follows was used to help prepare this procedure.

(a) USM Go; GE

C. Transducer - Use a 5 MHz transducer that can put a 60 degree shear wave into aluminum and has a maximum length of 0.75 inch (19.1 mm) and a maximum width of 0.38 inch (9.5 mm). A top-mounted connector is recommended. The transducer that follows was used to help prepare this procedure.

(1) SUSM 560AT, 5 MHz; Olympus

D. Reference Standard - Use reference standard NDT3166-003. See Figure 2 for data about this reference standard.

E. Couplant

(1) Use an ultrasonic couplant that will not cause corrosion or other damage to the airplane.

F. Cable - A cable with a right-angle connector is necessary for the inspections under the stringer caps.

BOEING PROPRIETARY - Copyright © Unpublished Work - See title page for details

3. **Prepare for the Inspection**

WARNING: PERSONNEL WHO ENTER A FUEL TANK MUST KNOW THE PRECAUTIONS AND SAFETY PROCEDURES CONTAINED IN CHAPTER 28 OF THE BOEING AIRCRAFT MAINTENANCE MANUAL. DANGEROUS FUMES AND THE POSSIBILITY OF AN EXPLOSION EXIST IN THE FUEL TANKS.

A. Get access to the inspection area through the access holes in the wing fuel tank.

B. Remove the screen from the fuel pickups at stringers 5 and 9, outboard of rib 5.

C. Fully clean the inspection surface. If there is loose paint or paint chips, smooth the area as necessary by an approved procedure that will not damage the airplane.

D. Remove sealant only where necessary to put the transducer in positions to fully examine the applicable fastener holes.

4. **Instrument Calibration**

A. Set the instrument frequency in the 4 to 6 MHz range.

B. Put couplant on the reference standard at transducer position 1 (TP1) and TP2 as shown in Figure 3.

C. Put the transducer at TP1 and move it as necessary to get a maximum signal from the top surface of the hole in leg II of the sound path. See Figure 3 for the approximate surface distance between the transducer and the hole when leg III of the sound path is used. This distance can be different by a small quantity for transducers that are not exactly 60 degrees.

D. Adjust the instrument delay and range controls so that the initial pulse signal is set at 0 percent of full screen width (FSW) and the maximum signal from the far surface of the hole (in leg II) is set at 60 percent of FSW as shown in Detail I in Figure 3.

E. Move the transducer laterally to transducer position 2 (TP2) as shown in Figure 3 and get a maximum signal from the through notch. Do not move the transducer to or away from the notch when you do this, only move it laterally. This signal will occur at approximately 68 percent of FSW as shown in Detail II in Figure 3.

F. Adjust the gain control to set the notch signal to 80 percent of full screen height (FSH) as shown in Detail II in Figure 3.

G. Add 12 dB. Make a record of the instrument gain that is used.

5. **Inspection Procedure**

NOTE: This inspection looks for cracks that are fully through the stringer thickness. Thus, you can use the signal from the top or bottom surfaces of the fastener hole to find these cracks. It is not necessary to examine each fastener location in leg II of the sound path.

A. Identify the inspection areas shown in Figure 1 and identify a location to start the inspection.

B. Make sure the instrument is calibrated as specified in Paragraph 4.

C. Put couplant on the horizontal flange of the stringer at the transducer contact area.

BOEING PROPRIETARY - Copyright © Unpublished Work - See title page for details

D. Put the transducer on the horizontal flange of the stringer, adjacent to the fastener location to be examined and move the transducer as necessary to get a signal from the fastener hole. Because the stringer thickness can be different from the reference standard thickness, the fastener hole signal can occur at less than or more than 60% of FSW.

NOTE: If you cannot easily see the signal from the fastener hole, add gain as necessary to set the signal at 30 percent of FSH. If you add gain, make sure that you set the instrument gain back to the quantity recorded in Paragraph 4.G. before you examine subsequent fastener holes.

E. Slowly move the transducer in a lateral direction away from the fastener hole. As the signal from the fastener hole starts to decrease, look for a signal to occur to the right of the fastener hole signal, as the notch signal occurred during instrument calibration. Be sure to keep the transducer perpendicular to the direction of crack growth while you do this. Signals that are 40% or more of FSH and occur directly after the hole signal are possible crack signals and more analysis is necessary. Go to Paragraph 6. for instructions to help make an analysis of all possible crack signals that occur.

NOTE: The location where a crack signal occurs in relation to the hole signal will be different for different diameter fasteners. As the fastener diameter decreases, the distance between the hole and possible crack signals will also decrease. You can see this occur if you examine the small hole in the reference standard.

(1) Do more scans from different angular directions at fastener holes where possible crack signals occur that are less than 40 percent of FSH.

NOTE: This can only be done where there is sufficient access.

F. Do Paragraph 5.D. and Paragraph 5.E. again but examine the opposite side of the fastener hole.

G. Do Paragraph 5.C. thru Paragraph 5.F. to examine the other fastener hole locations at this inspection area.

NOTE: Do a check of the instrument calibration every 30 minutes and after the inspection is completed. If the sensitivity has changed, calibrate the instrument again and do the inspection at all areas that were examined since the last calibration check.

H. Do Paragraph 5.C. thru Paragraph 5.G. at all inspection areas identified in Figure 1 on the left and right wings.

I. Examine the vertical flange of the rail stringer for cracks as follows:

NOTE: MPD DTR Check Form Items 57-20-02-2 and 57-20-02-5 also examine the vertical flange of the rail stringer for cracks. See Figure 1, Sheet 3, flagnotes 2 and 3.

(1) Put the transducer on the vertical flange of the stringer as shown in Figure 1, Sheet 3, flagnotes 2 and 3. Keep the transducer at the lowest possible distance from the horizontal flange. Be sure that the top edge of the transducer is not more than 0.4 inches (10 mm) above the horizontal flange of the stringer.

(2) Make a scan forward in the direction of the rib, up to the sealant on the vertical flange. As you do this, look for crack signals to occur on the instrument screen display.

(3) A signal that occurs on the instrument screen display is a possible crack signal. See Paragraph 6.B. thru Paragraph 6.C. and the paragraph that follows for instructions to help make an analysis of possible crack signals.

(a) Do an inspection of the vertical flange again, but from the opposite side of the rib. If the signal occurs from this direction too, then the signal is caused by a crack.

(4) Do Paragraph 5.I.(1) thru Paragraph 5.I.(3) at all inspection areas identified in Figure 1, Sheet 2 on the left and right wings.

BOEING PROPRIETARY - Copyright © Unpublished Work - See title page for details

6. **Inspection Results**

A. A signal that is 40 percent or more of FSH that occurs to the right of the hole signal and increases in FSH as the signal from the hole begins to decrease in FSH (or immediately after it decreases to zero percent of FSH) is a possible crack signal. It is necessary to do more analysis of these signals. Go to Paragraph 6.B. and continue to make an analysis of these possible crack signals.

NOTE: It is very possible that cracks that are smaller than the reference notch will have a signal that is less than 40 percent of FSH. Thus, make a careful record of all possible cracks that are less than 40 percent of FSH to refer to during the subsequent inspection interval.

B. Identify if the crack signal is caused by couplant on the part surface as follows:

(1) Get a maximum signal from the possible crack and keep the transducer at that location.

(2) Remove all couplant that is between the front of the transducer and the inspection area.

(3) If the signal goes away, no more analysis is necessary. If the signal continues to stay, go to Paragraph 6.C. and continue to make an analysis of the possible crack signal.

C. Compare the possible crack signal to the signal that you get from the notch in the reference standard. Because the reference standard thickness will be different from the thickness of the stringers, you can only compare how the possible crack signal occurs in relation to the hole signal.

D. Remove the fastener and do an open hole eddy current inspection as specified in Part 6, 51-00-00, Procedure 16 to make sure there is a crack.

BOEING PROPRIETARY - Copyright © Unpublished Work - See title page for details

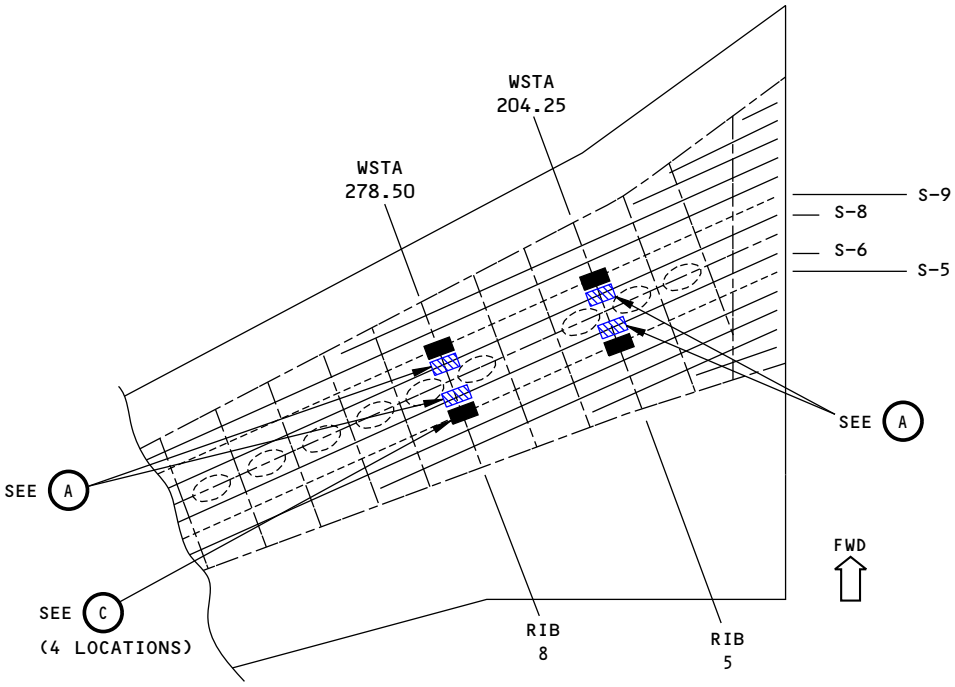

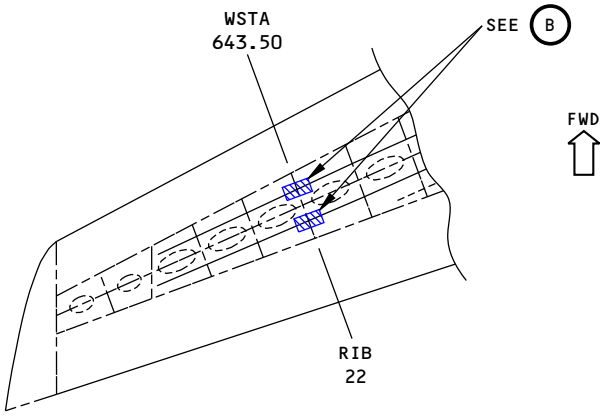

PLAN VIEW OF THE LOWER SURFACE OF THE OUTER WING

NOTES:

- THE RIGHT WING IS SHOWN; THE LEFT WING IS OPPOSITE

INSPECTION AREAS SPECIFIED IN DTR CHECK FORM ITEMS 57-20-02-2 AND 57-20-02-5. SEE FIGURE 1, SHEETS 2 AND 3 FOR MORE DETAILS.

INSPECTION AREAS SPECIFIED IN DTR CHECK FORM ITEM 57-20-03-3. SEE FIGURE 1, SHEET 4 FOR MORE DETAILS.

2174767 S0000477795_V4

Inspection Areas
Figure 1 (Sheet 1 of 4)

BOEING PROPRIETARY - Copyright © Unpublished Work - See title page for details

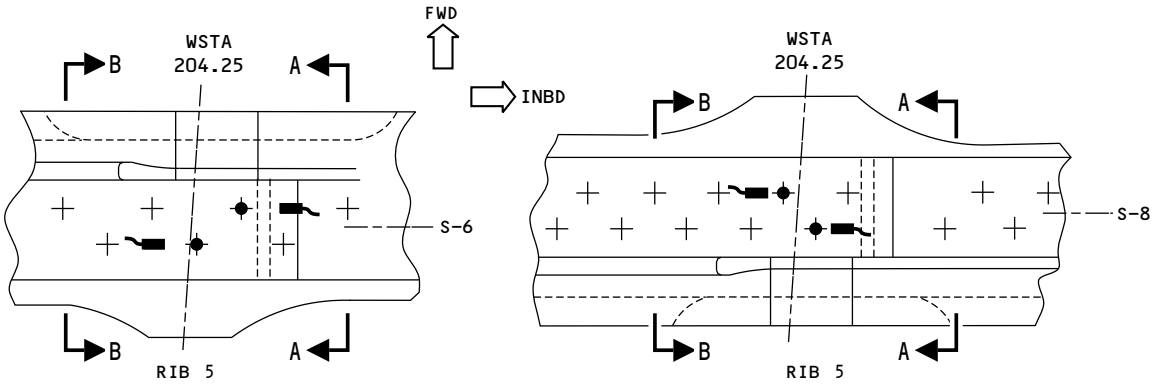

FASTENER LOCATIONS TO EXAMINE IN RAIL STRINGERS 6 AND 8 AT RIBS 5 AND 8
(RIB 5 IS SHOWN; RIB 8 IS ALMOST THE SAME)
(INSPECTION AREAS FOR MPD DTR CHECK FORM ITEMS
57-20-02-2 AND 57-20-02-05)

A

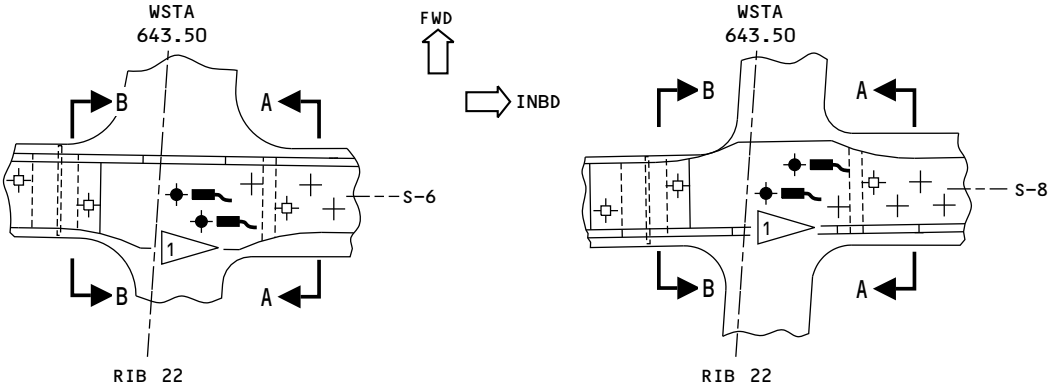

FASTENER LOCATIONS TO EXAMINE IN RAIL STRINGERS 6 AND 8 AT RIB 22
(INSPECTION AREAS FOR MPD DTR CHECK FORM ITEMS
57-20-02-2 AND 57-20-02-05)

B

NOTES:

- THIS PROCEDURE EXAMINES THE HORIZONTAL AND VERTICAL FLANGES OF THE RAIL STRINGERS. SEE PARAGRAPH 5.I FOR THE INSTRUCTIONS TO EXAMINE THE VERTICAL FLANGE. SEE FIGURE 1 (SHEET 3) FOR THE INSPECTION DETAILS

● FASTENER LOCATIONS TO EXAMINE

▬ TRANSDUCER AND APPROXIMATE LOCATIONS TO EXAMINE EACH APPLICABLE FASTENER LOCATION

1 AT THE RIB 22 INSPECTION AREAS, EXAMINE THE FASTENER LOCATIONS FROM THE INBOARD SIDE OF THE RIB ONLY

2174768 S0000477797_V2

Inspection Areas
Figure 1 (Sheet 2 of 4)

BOEING PROPRIETARY - Copyright © Unpublished Work - See title page for details

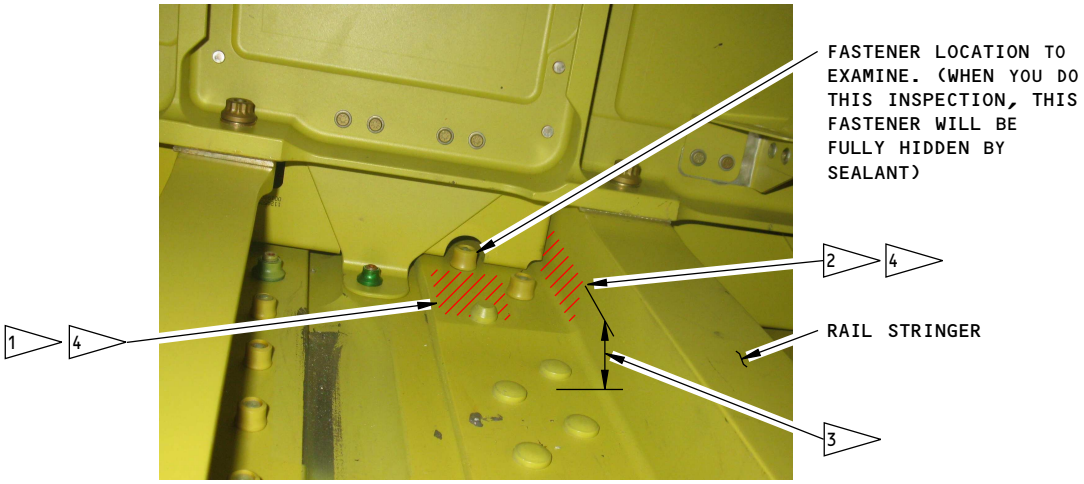

THE INBOARD SIDE OF RIB 5 AT RAIL STRINGER 6 IS SHOWN.
THE INSPECTION AREAS AT RAIL STRINGER 8 IS ALMOST THE SAME.
THE INSPECTION AREAS FOR RAIL STRINGERS 6 AND 8 AT RIBS 8 AND 22 ARE ALMOST THE SAME

A-A

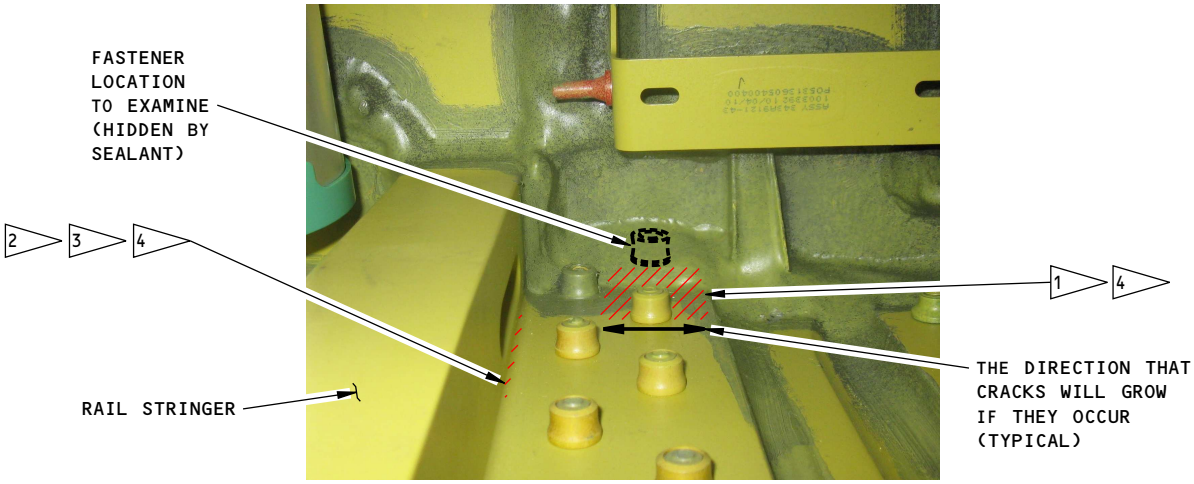

THE OUTBOARD SIDE OF RIB 5 AT RAIL STRINGER 6 IS SHOWN.
THE INSPECTION AREAS AT RAIL STRINGER 8 IS ALMOST THE SAME.
THE INSPECTION AREAS FOR RAIL STRINGERS 6 AND 8 AT RIBS 8 AND 22 ARE ALMOST THE SAME

B-B

NOTES:

1. TRANSDUCER CONTACT SURFACE. REMOVE SEALANT ONLY AS NECESSARY TO FULLY EXAMINE THIS FASTENER LOCATION.
2. TRANSDUCER CONTACT SURFACE TO EXAMINE THE VERTICAL FLANGE OF THE RAIL STRINGER.
3. THE TRANSDUCER CANNOT BE MORE THAN 0.4 INCH (10 MM) ABOVE THE SURFACE OF THE HORIZONTAL FLANGE FOR THE INSPECTION OF THE VERTICAL FLANGE.
4. INSPECTION AREAS FOR MPD DTR CHECK FORM ITEMS 57-20-02-2 AND 57-20-02-5.

2174769 S0000477798_V2

Inspection Areas
Figure 1 (Sheet 3 of 4)

BOEING PROPRIETARY - Copyright © Unpublished Work - See title page for details

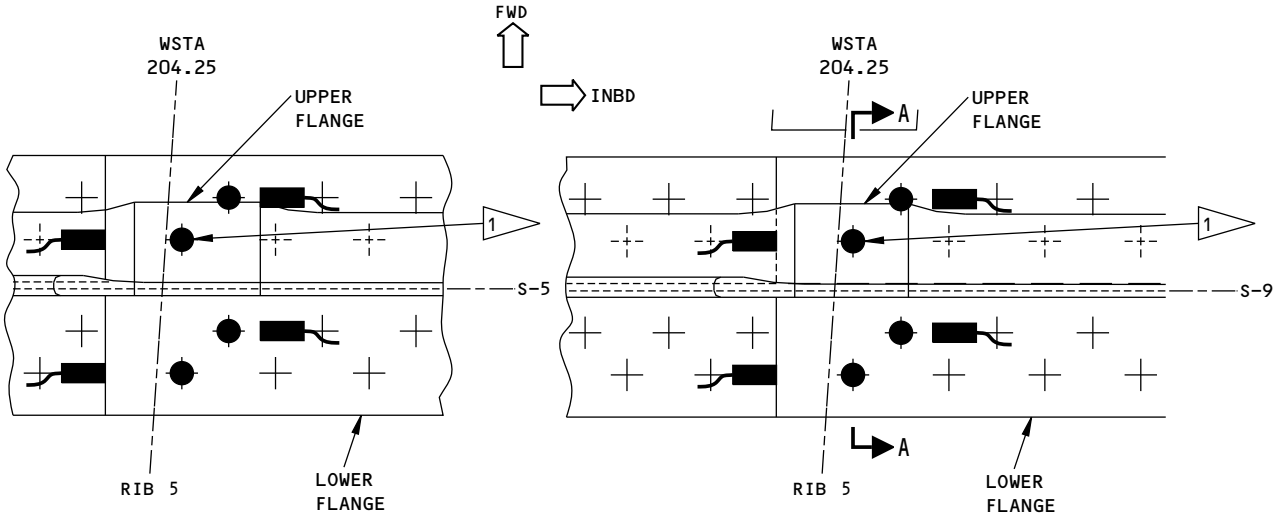

FASTENER LOCATIONS TO EXAMINE IN THE SPLICE STRINGERS AT RIBS 5 AND 8
(RIB 5 IS SHOWN; RIB 8 IS ALMOST THE SAME)
(INSPECTION AREAS FOR MPD DTR CHECK FORM ITEM 57-20-03-3)

C

NOTES:

- EXAMINE THE SPLICE STRINGERS AT THE WING LOWER SKIN FOR CRACKS AT THE FASTENER LOCATIONS SHOWN ABOVE. THESE FASTENERS ARE HIDDEN BY SEALANT. REMOVE THE SEALANT ONLY AS NECESSARY FOR THE TRANSDUCER TO FULLY EXAMINE THE HIDDEN FASTENER LOCATIONS.
- EXAMINE THE HIDDEN FASTENERS IN SPLICE STRINGERS 5 AND 9 AT RIBS 5 AND 8.
- SEE FIGURE 1 (SHEET 3) FOR AN EXAMPLE OF THE INSPECTION OF HIDDEN FASTENERS. THE INSPECTION AREAS ARE DIFFERENT, BUT THE INSPECTION IS ALMOST THE SAME.

1 THIS FASTENER IS IN THE LOWER FLANGE OF THE SPLICE STRINGER

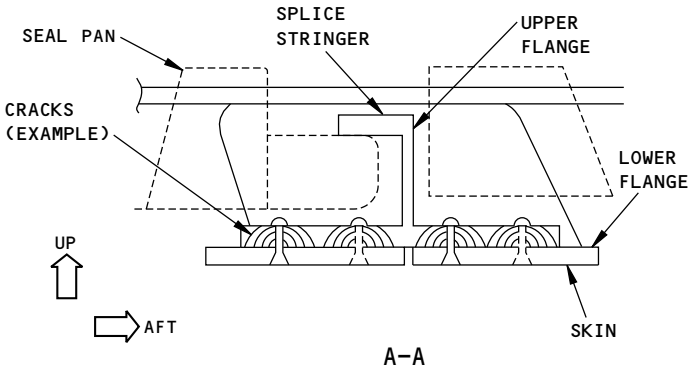

2174770 S0000477799_V2

Inspection Areas
Figure 1 (Sheet 4 of 4)

BOEING PROPRIETARY - Copyright © Unpublished Work - See title page for details

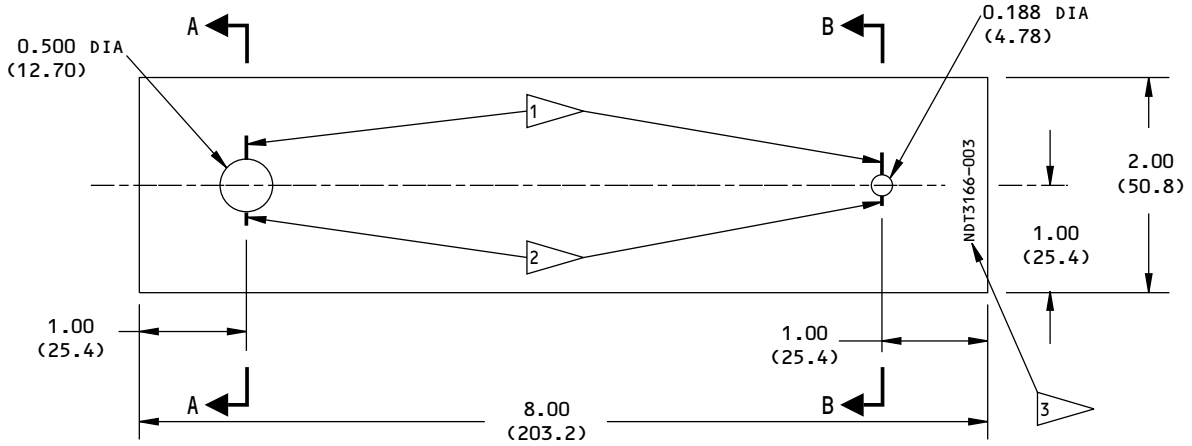

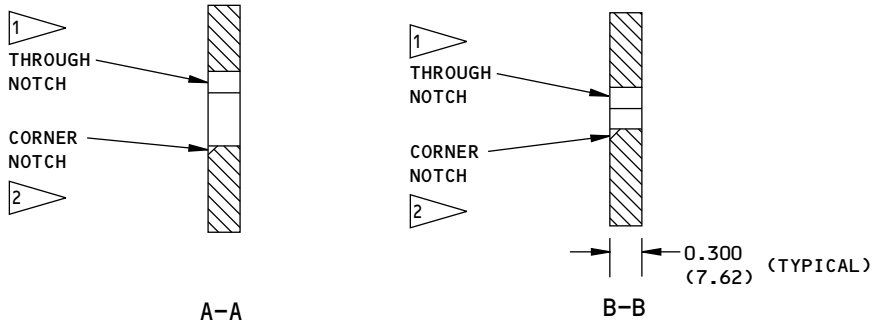

NOTES:

- ALL DIMENSIONS ARE IN INCHES (MILLIMETERS ARE IN PARENTHESES)
- TOLERANCE (UNLESS SPECIFIED DIFFERENTLY):

INCHES	MILLIMETERS	ANGULAR
X.XXX = ±0.005	X.XX = ±0.10	± 1°
X.XX = ±0.025	X.X = ±0.5	
X.X = ±0.050	X = ±1	

- MATERIAL: AIRPLANE QUALITY ALUMINUM SUCH AS 2024, 7075-T6
- SURFACE ROUGHNESS: 125 Ra OR BETTER

1 EDM THROUGH NOTCH: 0.200 (5.08) X 0.007 (0.18) WIDE ±0.003 (0.08)

2 EDM CORNER NOTCH: 0.100 (2.54) X 0.100 (2.54) X 0.007 (0.18) WIDE ±0.003 (0.08)

3 ETCH OR STAMP THE REFERENCE STANDARD NUMBER, NDT3166-003, AT APPROXIMATELY THIS LOCATION.

2174771 S0000477800_V1

Reference Standard NDT3166-003
Figure 2

BOEING PROPRIETARY - Copyright © Unpublished Work - See title page for details

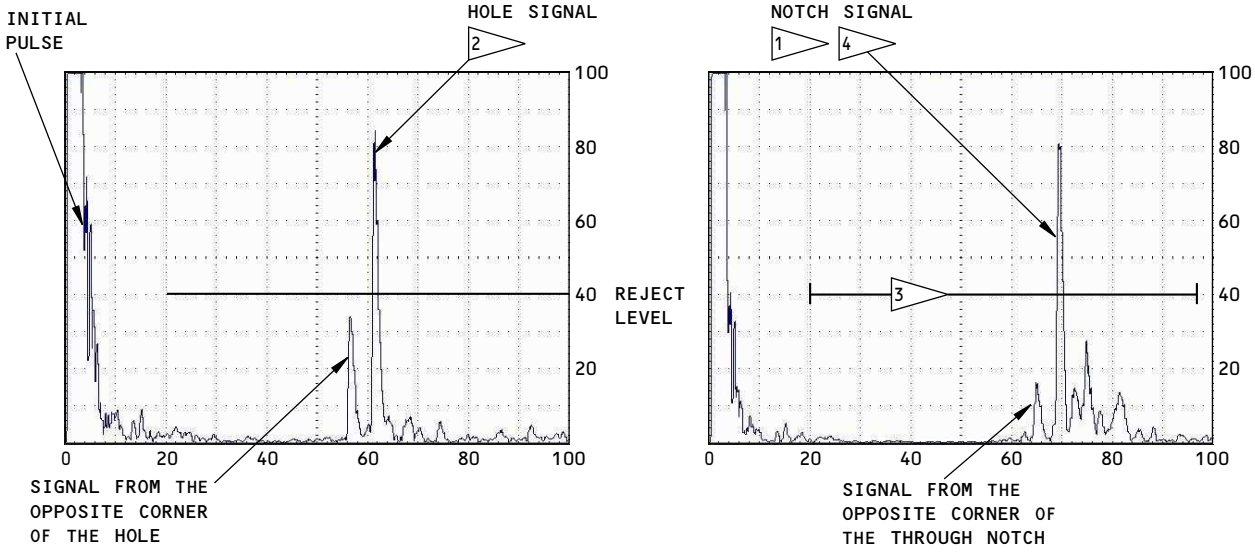

SIGNAL FROM THE HOLE WITH THE TRANSDUCER AT POSITION TP1
DETAIL I

SIGNAL FROM THE NOTCH WITH THE TRANSDUCER AT POSITION TP2
DETAIL II

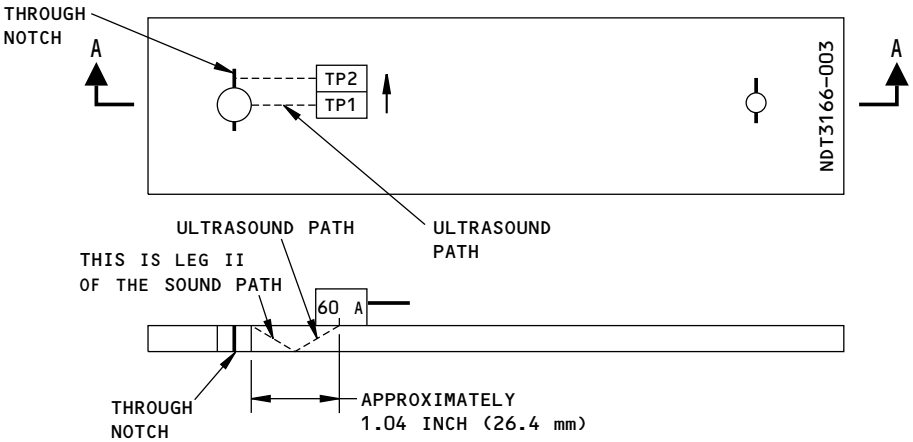

A-A

NOTES:

- TP=TRANSDUCER POSITION

1. SEE HOW AND WHERE THE NOTCH SIGNAL OCCURS ON THE SCREEN IN RELATION TO THE HOLE SIGNAL.
2. BECAUSE THE THICKNESS OF THE STRINGER IS DIFFERENT AT SOME INSPECTION AREAS, THE FSW LOCATION OF THE FASTENER HOLE SIGNALS WILL ALSO BE DIFFERENT.
3. THE LOCATION WHERE FASTENER HOLE AND CRACK SIGNALS CAN OCCUR. SIGNALS THAT ARE EQUAL TO OR MORE THAN 40% OF FSH THAT OCCUR TO THE RIGHT OF THE HOLE SIGNAL ARE POSSIBLE CRACK SIGNALS AND MORE ANALYSIS IS NECESSARY.
4. THE LOCATION WHERE A CRACK SIGNAL OCCURS IN RELATION TO THE HOLE SIGNAL WILL BE DIFFERENT FOR DIFFERENT FASTENER DIAMETERS. AS THE FASTENER DIAMETER DECREASES, THE DISTANCE BETWEEN THE HOLE AND THE NOTCH SIGNALS WILL DECREASE. YOU CAN SEE THIS OCCUR IF YOU EXAMINE THE SMALL HOLE IN THE REFERENCE STANDARD.

2174772 S0000477801_V2

Instrument Calibration
Figure 3

BOEING PROPRIETARY - Copyright © Unpublished Work - See title page for details

PART 4 - ULTRASONIC

OUTER WING - WING LOWER SKIN BEHIND THE FLAP TRACK FITTINGS

1. Purpose

A. Use this procedure to help examine the wing lower skin of the outer wings for cracks at the fastener locations that connect the flap track fittings to the airplane. Do this inspection at flap support 1 (WSTA 442) and flap support 2 (WSTA 331). See Figure 1 for the inspection areas.

B. 737 Maintenance Planning Document (MPD) Damage Tolerance Record (DTR) Check Form Reference:

(1) Item: 57-20-12

2. Equipment

A. General

(1) All ultrasonic equipment that can be calibrated as specified in Paragraph 4. can be used to do this inspection.

(2) Refer to Part 1, 51-01-00, for data about the equipment manufacturers.

B. Instrument

(1) Use an ultrasonic instrument that:

(a) Operates in the pulse-echo mode.

(b) Operates in a frequency range of 4 to 6 MHz.

NOTE: Broadband instruments can be used if they can be calibrated as specified in this procedure.

(2) The instrument that follows was used to help prepare this procedure.

(a) USM Go; GE

C. Transducer - Two 5 MHz transducer that can put a 60 degree shear wave into aluminum are necessary for this inspection. A top-mounted connector is recommended.

(1) Primary transducer: Use a transducer that has a 0.375 inch (9.53 mm) diameter crystal with a maximum length of 1.0 inch (25.4 mm) and a maximum width of 0.50 inch (12.7 mm).

(2) Secondary transducer: Use a transducer that has a 0.187 inch (4.75 mm) diameter crystal with a maximum length of 0.60 inch (15.2 mm) and a maximum width of 0.30 inch (7.6 mm).

(3) The transducers that follow were used to help prepare this procedure.

(a) LA-560T, 5 MHz with a 0.38 inch (9.7 mm) diameter crystal; Techna NDT

(b) SUSM 560AT, 5 MHz with a 0.187 inch (4.75 mm) diameter crystal; Olympus

D. Reference Standard - Use reference standard NDT3166-007. See Figure 2 for data about this reference standard.

E. Couplant

(1) Use an ultrasonic couplant that will not cause corrosion or other damage to the airplane.

3. Prepare for the Inspection

A. Remove the flap track fairings to get access to the inspection area.

B. Remove all sealant that occurs where the transducer must be put for the inspection.

BOEING PROPRIETARY - Copyright © Unpublished Work - See title page for details

C. Fully clean the inspection surface. If there is loose paint or paint chips, smooth the area as necessary by an approved procedure that will not damage the airplane.

4. Instrument Calibration

A. Set the instrument frequency in the 4 to 6 MHz range.

B. Put couplant on the reference standard at transducer position 1 (TP1) and TP2 as shown in Figure 3.

C. Put the transducer at TP1 and move it as necessary to get a maximum signal from the hole in leg I of the sound path. See Figure 3 for the approximate surface distance between the transducer and the hole when leg I of the sound path is used. This distance can be different by a small quantity for transducers that are not exactly 60 degrees.

D. Adjust the instrument delay and range controls so that the initial pulse signal is set at 0 percent of full screen width (FSW) and the maximum signal from the hole is set at 50 percent of FSW as shown in Detail I in Figure 3.

E. Move the transducer to transducer position 2 (TP2) as shown in Figure 3 and get a maximum signal from the through notch. Do not move the transducer to or away from the notch when you do this, only move it laterally. This signal will occur at approximately 55 percent of FSW as shown in Detail II in Figure 3.

F. Adjust the gain control to set the notch signal to 80 percent of full screen height (FSH) as shown in Detail II in Figure 3.

G. Add 18 dB. Make a record of the instrument gain that is used.

5. Inspection Procedure

NOTE: The lower skin of the wing changes thickness at different locations in the inspection area. Thus, the signal from the fastener holes can occur at different FSW locations. Also, the lower skin thickness is different for different airplanes. The reference standard is thicker than the wing lower skin thickness for all airplanes.

A. Identify the inspection areas shown in Figure 1 and identify a location to start the inspection.

B. Make sure the instrument is calibrated as specified in Paragraph 4.

C. Put couplant on the wing lower skin in the area to be examined.

D. Put the transducer on the wing lower skin, with the front of the transducer against the fitting and adjacent to the fastener hole location to be examined as shown by flagnote 1 in Figure 1. Move the transducer as necessary to get a maximum signal from the fastener hole. Because the thickness of the wing lower skin is different at different locations, this signal can occur between approximately 15 and 95% of FSW. Also, the FSW location of the signal will change when the distance between the transducer and the fastener hole changes.

NOTE: If you cannot easily see the signal from the fastener hole, add gain as necessary to set the signal at 30 percent of FSH.

E. Slowly move the transducer laterally to one of the edges of the fastener hole. As the signal from the fastener hole starts to decrease, look for a signal to occur to the right of the fastener hole signal, as the notch signal occurred during instrument calibration. Be sure to keep the transducer perpendicular to the direction of crack growth while you do this. Signals that are 40% or more of FSH and occur directly after the hole signal are possible crack signals and more analysis is necessary. Go to Paragraph 6. for instructions to help make an analysis of all possible crack signals that occur.

NOTE: Where possible, use the edge of the fitting as a probe guide to make lateral scans of the fastener hole locations to be examined. See Figure 1, flagnote 1.

BOEING PROPRIETARY - Copyright © Unpublished Work - See title page for details

F. Do Paragraph 5.D. and Paragraph 5.E. again but examine the other side of the fastener hole.

G. Examine the same fastener hole again, but examine it from different directions as shown by flagnote 2 in Figure 1.

NOTE: Fasteners in the transducer inspection areas can prevent transducer access to the best transducer positions to examine the applicable fastener locations. At each fastener location, try to keep the transducer as perpendicular to the possible crack location as you can.

H. Do Paragraph 5.C. thru Paragraph 5.G. to examine all inspection areas identified in Figure 1.

NOTE: Do a check of the instrument calibration every 30 minutes and after the inspection is completed. If the sensitivity has changed, calibrate the instrument again and do the inspection at all areas that were examined since the last calibration check.

I. Go to Paragraph 6. for instructions to help make an analysis of all possible crack signals that are 40 percent or more of FSH. Possible crack signals are those signals that occur to the right of the hole signal and are similar to the notch signals that occurred on the reference standard during instrument calibration.

6. Inspection Results

A. A signal that is 40 percent or more of FSH that occurs to the right of the hole signal and increases in FSH as the signal from the hole begins to decrease in FSH (or immediately after it decreases to zero percent of FSH) is a possible crack signal. It is necessary to do more analysis of these signals. Go to Paragraph 6.B. and continue to make an analysis of these possible crack signals.

NOTE: It is very possible that cracks smaller than the reference notch will have a signal that is less than 40 percent of FSH. Thus, make a careful record of all possible cracks that are less than 40 percent of FSH to refer to during the subsequent inspection interval.

B. Identify if the crack signal is caused by couplant on the part surface as follows:

(1) Get a maximum signal from the possible crack and keep the transducer at that location.

(2) Remove all couplant that is between the front of the transducer and the inspection area.

(3) If the signal goes away, no more analysis is necessary. If the signal continues to stay, go to Paragraph 6.C. and continue to make an analysis of the possible crack signal.

C. Compare the possible crack signal to the signal that you get from the notch in the reference standard. Because the reference standard thickness will be different from the thickness of the wing lower skin, you can only compare how the possible crack signal occurs in relation to the hole signal.

D. Remove the fastener and do an open hole eddy current inspection as specified in Part 6, 51-00-00, Procedure 16 to make sure there is a crack.

BOEING PROPRIETARY - Copyright © Unpublished Work - See title page for details

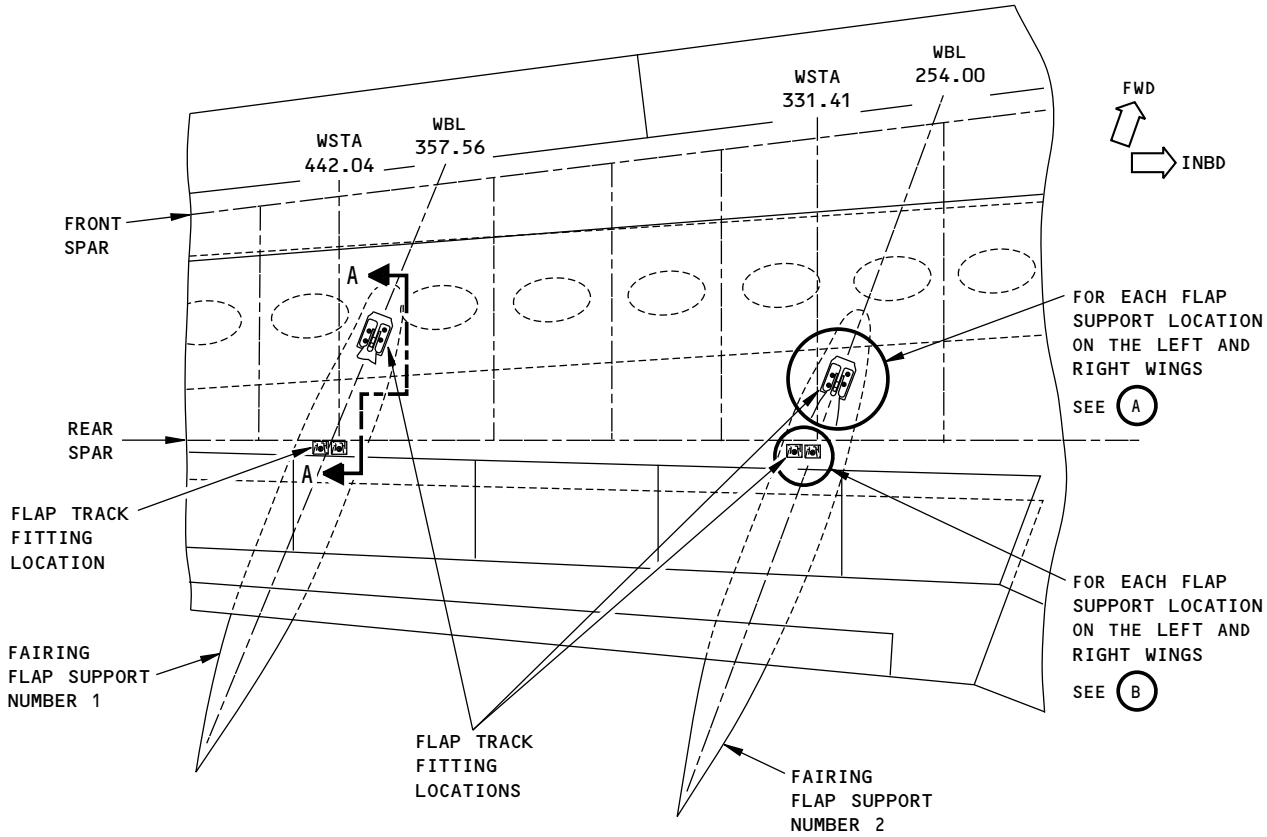

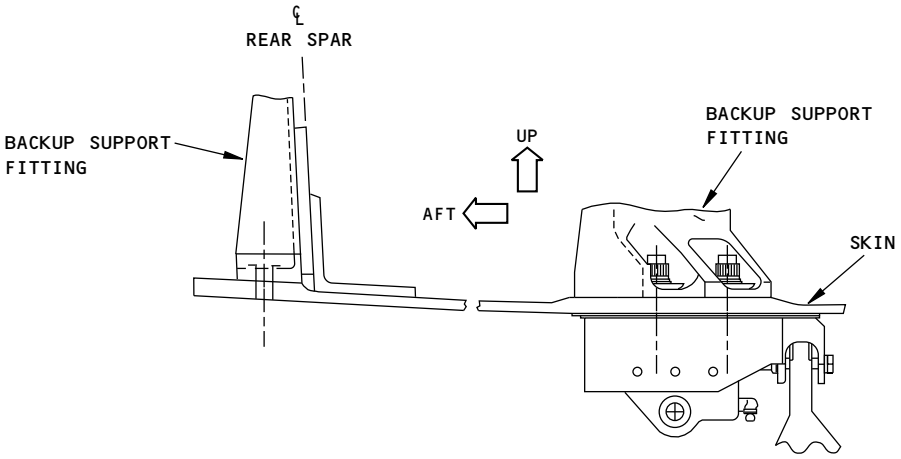

A-A

NOTES:

- AS SHOWN ABOVE, THERE ARE FOUR INSPECTION AREAS ON EACH WING.
- THE LEFT WING IS SHOWN; THE RIGHT WING IS ALMOST THE SAME

2174773 S0000477784_V2

Inspection Areas
Figure 1 (Sheet 1 of 2)

BOEING PROPRIETARY - Copyright © Unpublished Work - See title page for details

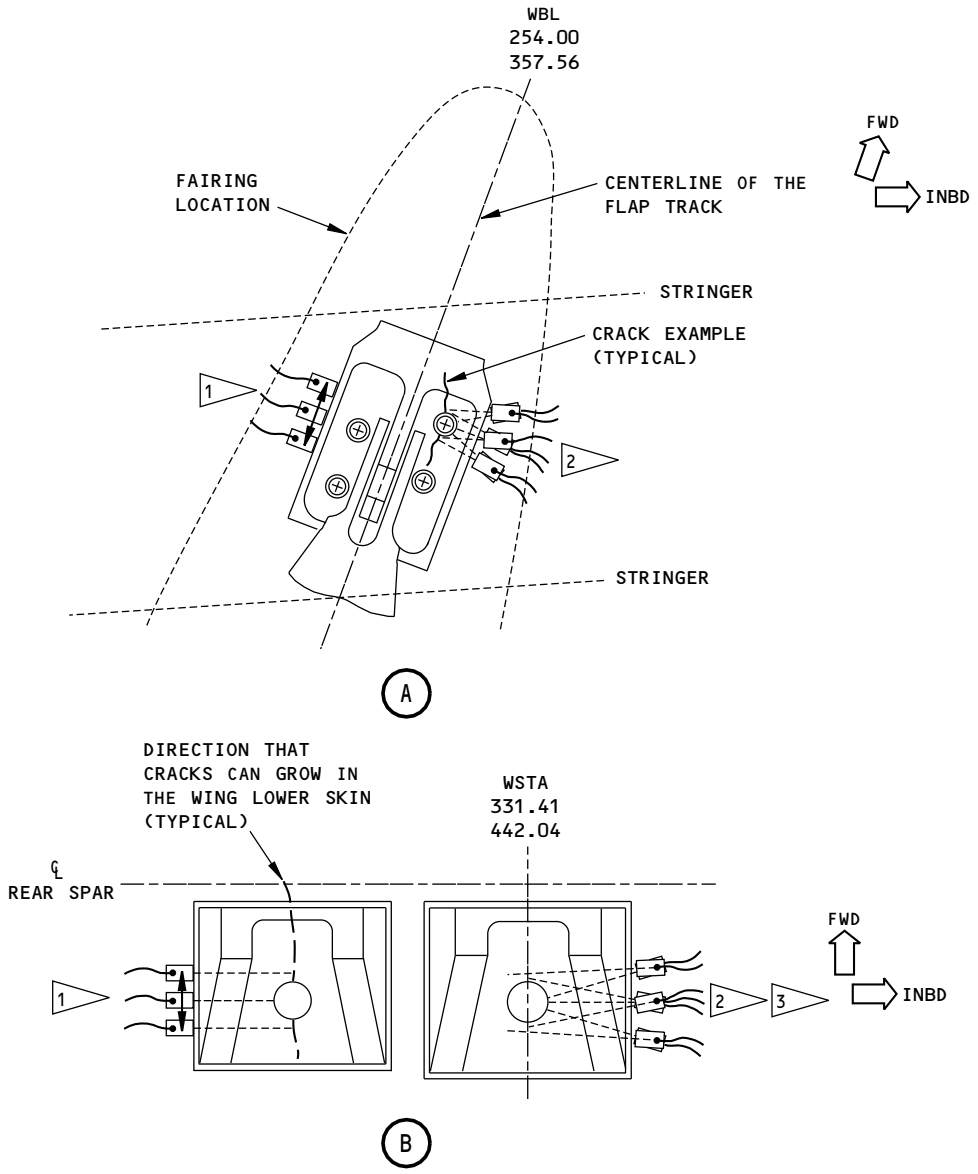

NOTES:

- TO EXAMINE EACH FASTENER HOLE LOCATION, MAKE A LATERAL SCAN TO ONE SIDE OF THE FASTENER HOLE AS SHOWN, THEN MAKE A LATERAL SCAN TO THE OPPOSITE SIDE OF THE FASTENER HOLE AS SHOWN (FORWARD AND AFT DIRECTIONS). ALSO EXAMINE EACH FASTENER HOLE LOCATION AS SHOWN IN FLAGNOTE 2.

1 MAKE A LATERAL SCAN OF EACH FASTENER HOLE LOCATION. IF YOU CAN GET A GOOD SIGNAL FROM THE FASTENER HOLE WITH THE TRANSDUCER AGAINST THE FITTING, THEN USE THE FITTING AS A PROBE GUIDE WHEN YOU MAKE THE LATERAL SCANS OF THE FASTENER HOLE.

2 AT FASTENER HOLE LOCATIONS WHERE A POSSIBLE CRACK SIGNAL OCCURS, ALSO MAKE A SCAN OF THE FASTENER HOLE LOCATIONS AS SHOWN.

3 USE THE SECONDARY TRANSDUCER SPECIFIED IN PARAGRAPH 2.C.(2) TO EXAMINE THE INBOARD FASTENER HOLE AT WING STATION 442.04 ON THE LEFT AND RIGHT WINGS.

2174776 S0000477785_V2

Inspection Areas
Figure 1 (Sheet 2 of 2)

BOEING PROPRIETARY - Copyright © Unpublished Work - See title page for details

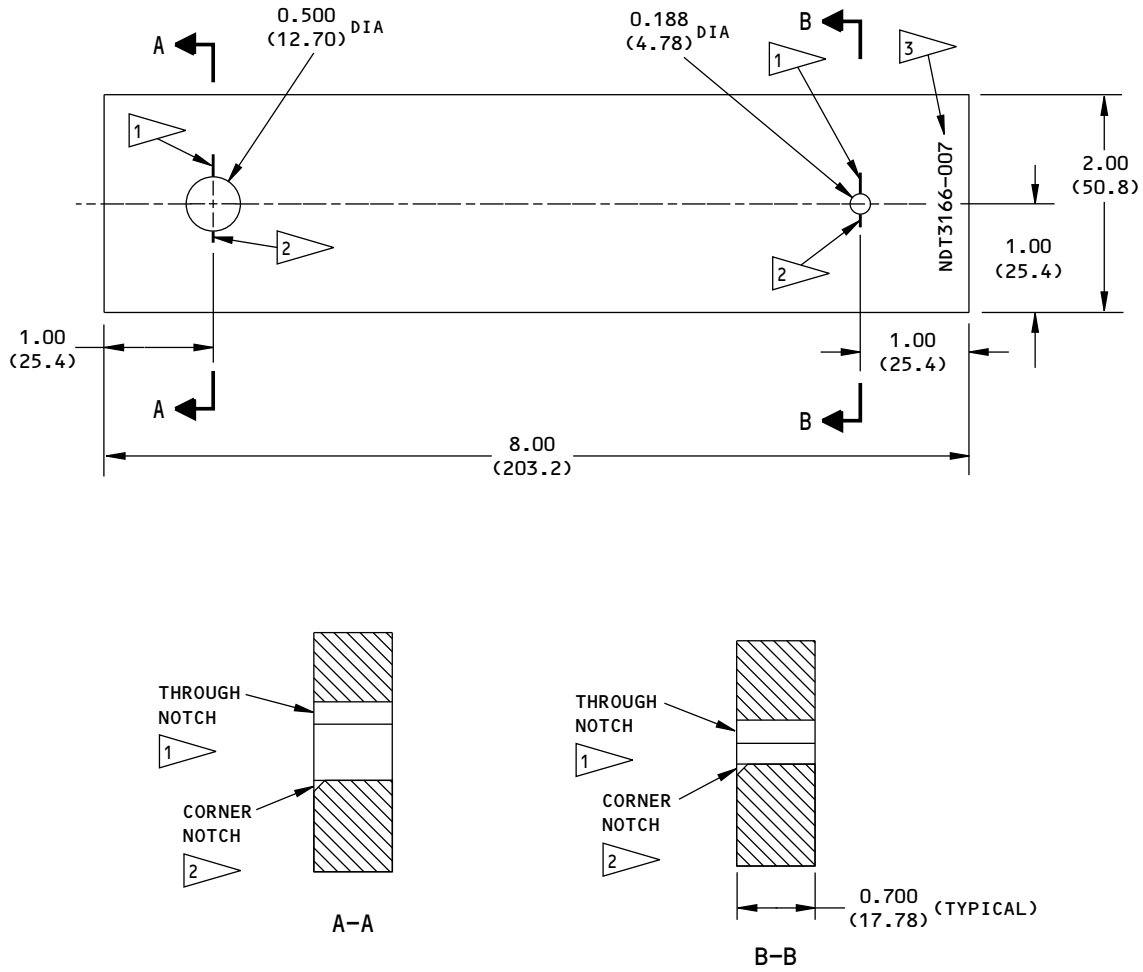

NOTES:

- ALL DIMENSIONS ARE IN INCHES (MILLIMETERS ARE IN PARENTHESES)
- TOLERANCE (UNLESS SPECIFIED DIFFERENTLY):

INCHES	MILLIMETERS	ANGULAR
X.XXX = ±0.005	X.XX = ±0.10	±1°
X.XX = ±0.025	X.X = ±0.5	
X.X = ±0.050	X = ±1	

- MATERIAL: AIRPLANE QUALITY ALUMINUM SUCH AS 2024, 7075-T6
- SURFACE ROUGHNESS: 125 Ra OR BETTER

1 EDM THROUGH NOTCH: 0.200 (5.08) X 0.007 (0.18) WIDE ±0.003 (0.08)

2 EDM CORNER NOTCH: 0.100 (2.54) X 0.100 (2.54) X 0.007 (0.18) WIDE ±0.003 (0.08)

3 ETCH OR STAMP THE REFERENCE STANDARD NUMBER, NDT3166-007, AT APPROXIMATELY THIS LOCATION.

2174774 S0000477786_V1

Reference Standard NDT3166-007
Figure 2

BOEING PROPRIETARY - Copyright © Unpublished Work - See title page for details

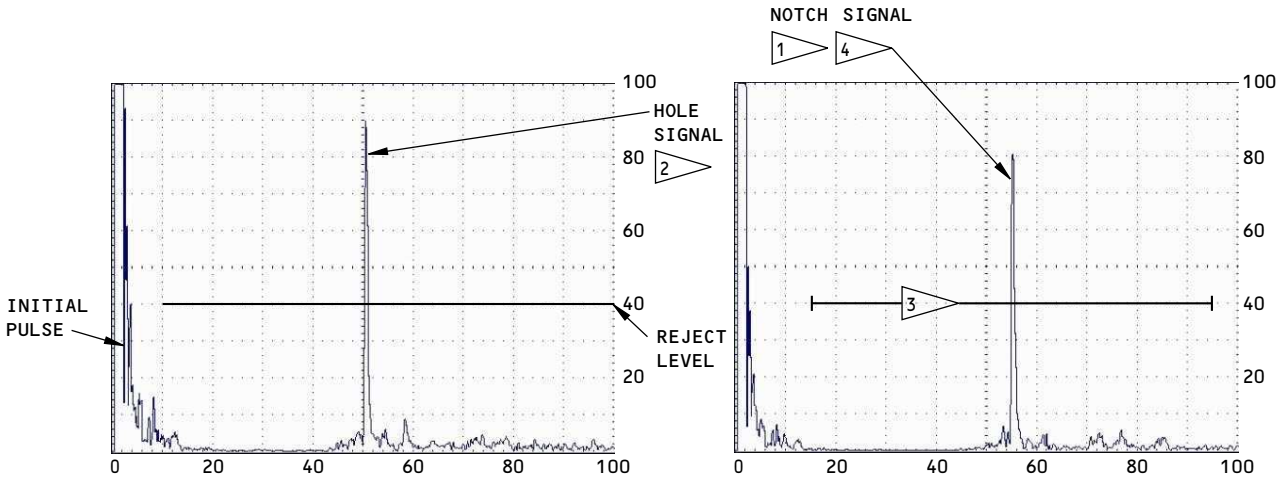

SIGNAL FROM THE HOLE WITH THE TRANSDUCER AT POSITION TP1

DETAIL I

SIGNAL FROM THE NOTCH WITH THE TRANSDUCER AT POSITION TP2

DETAIL II

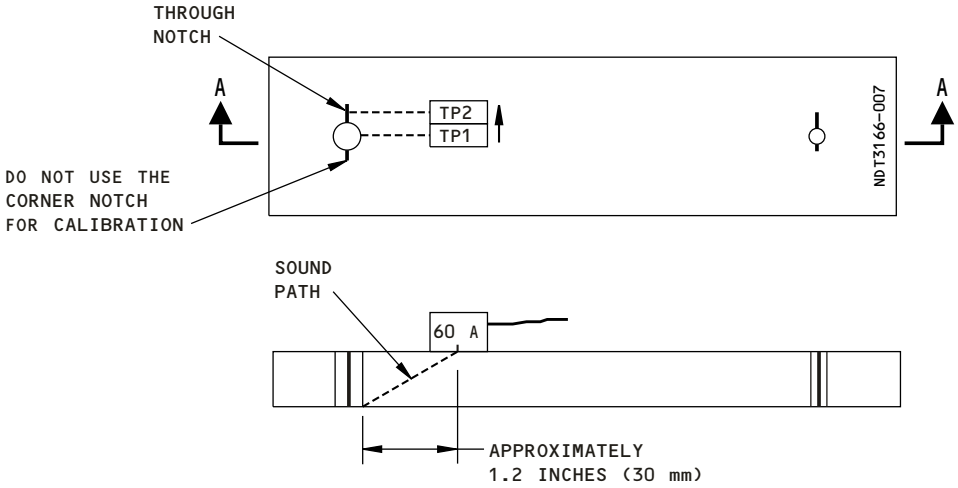

A-A

NOTES:

- TP = TRANSDUCER POSITION
- USE THE THROUGH NOTCH FOR THIS CALIBRATION

1 SEE HOW AND WHERE THE NOTCH SIGNAL OCCURS ON THE SCREEN IN RELATION TO THE HOLE SIGNAL.

2 BECAUSE THE THICKNESS OF THE WING LOWER SKIN CHANGES AT DIFFERENT INSPECTION AREAS, THE FSW LOCATION OF THE FASTENER HOLE SIGNALS WILL ALSO BE DIFFERENT.

3 THE LOCATION WHERE FASTENER HOLE AND CRACK SIGNALS CAN OCCUR. SIGNALS THAT ARE 40% OR MORE OF FSH AND OCCUR TO THE RIGHT OF THE HOLE SIGNAL ARE POSSIBLE CRACK SIGNALS AND MORE ANALYSIS IS NECESSARY.

4 THE LOCATION WHERE A CRACK SIGNAL OCCURS IN RELATION TO THE HOLE SIGNAL WILL BE DIFFERENT FOR DIFFERENT FASTENER DIAMETERS. AS THE FASTENER DIAMETER DECREASES, THE DISTANCE BETWEEN THE HOLE AND THE NOTCH SIGNALS WILL ALSO DECREASE.

2174775 S0000477787_V2

Instrument Calibration
Figure 3

BOEING PROPRIETARY - Copyright © Unpublished Work - See title page for details

OUTER WING - SKIN AND WEB FLANGES OF THE LOWER CHORD OF THE FRONT SPAR

1. Purpose

A. Use this procedure to help examine the lower chord for cracks at the front spar of the wing. The web and skin flanges of the aluminum lower chord are examined for cracks at the hidden and non-hidden fastener locations. See Figure 1 for the inspection areas.

B. Examine the areas as follows:

(1) The web flange from ribs 1 to 25 at all the fasteners locations that are hidden by the terminal and rib attach fittings, stiffeners and slat can assemblies.

(2) The skin flange from ribs 1 to 5, 7 to 19 and 22 to 25 at all the fastener locations that are not hidden.

(3) The skin flange from ribs 1 to 19 and 22 to 25 at all the fastener locations that are hidden by the rib attach fittings.

C. 737 Maintenance Planning Document (MPD) Damage Tolerance Record (DTR) Check Form Reference:

(1) Item: 57-20-04-1

(2) Item: 57-20-04-3

(3) Item: 57-20-04-4

(4) Item: 57-20-04-7

2. Equipment

A. General

(1) All ultrasonic equipment that can be calibrated as specified in Paragraph 4. can be used to do this inspection.

(2) Refer to Part 1, 51-01-00, for data about the equipment manufacturers.

B. Instrument

(1) Use an ultrasonic instrument that:

(a) Operates in the pulse-echo mode.

(b) Operates in a frequency range of 4 to 6 MHz.

NOTE: Broadband instruments can be used if they can be calibrated as specified in this procedure.

(2) The instrument that follows was used to help prepare this procedure.

(a) USM Go; GE

C. Transducers - Three 5 MHz transducers are necessary to examine all of the inspection areas. Use the transducers that follow:

(1) Use a transducer that puts a 60 degree shear wave in aluminum, with a 0.250 inch (6.35 mm) element and a top-mounted connector. The case must not be more than 0.75 inch (19.1 mm) long or 0.40 inch (10.1 mm) wide. The transducers that follow were used to help prepare this procedure.

(a) MA-605T; Techna

BOEING PROPRIETARY - Copyright © Unpublished Work - See title page for details

(b) SUM 560AT; Olympus

(2) Use a transducer that puts a 70 degree shear wave in aluminum, with a 0.250 inch (6.35 mm) element and a top-mounted connector. The case must not be more than 0.75 inch (19.1 mm) long or 0.40 inch (10.1 mm) wide. The transducers that follow were used to help prepare this procedure.

(a) MA-705S (side-mount), order part number MA-705T for the top-mounted connector; Techna

(b) SUM-570AT; Olympus

(3) Use a transducer that puts a 60 degree shear wave in aluminum, with a 0.250 inch (6.35 mm) element and a side-mounted connector. The case must not be more than 0.40 inch (10.1 mm) long or 0.40 inch (10.1 mm) wide. The transducer that follows was used to help prepare this procedure.

(a) TEK-5557/60S; Techna

D. Reference Standard - Use reference standard NDT3166-003 and NDT3166-006. See Figure 2 and Figure 3 for data about the reference standard.

E. Couplant

(1) Use an ultrasonic couplant that will not cause corrosion or other damage to the airplane.

3. Prepare for the Inspection

WARNING: PERSONNEL WHO ENTER A FUEL TANK MUST KNOW THE PRECAUTIONS AND SAFETY PROCEDURES CONTAINED IN CHAPTER 28 OF THE BOEING AIRCRAFT MAINTENANCE MANUAL. DANGEROUS FUMES AND THE POSSIBILITY OF AN EXPLOSION EXIST IN THE FUEL TANKS.

A. Remove sealant as necessary to fully examine the applicable fastener holes. Clean the inspection surface if necessary.

B. If there is loose paint or paint chips, smooth the area as necessary by an approved procedure that will not damage the airplane.

C. At the completion of this inspection, replace all sealant that was removed.

4. Instrument Calibration

A. Three instrument calibrations are necessary to fully examine the inspection areas identified in Figure 1.

(1) Calibrate the instrument to examine all Code ‘A’ hidden fastener locations in the web flange between ribs 1 and 19, the Code ‘A’ hidden fastener locations in the skin flange between ribs 1 and 19, and the non-hidden Code ‘A’ fastener locations in the skin flange between ribs 1 thru 5 and 7 thru 19. See Figure 1, Views C, D and E.

NOTE: The Code “A” fastener locations shown in Figure 1 are examples of typical inspection areas and do not show all locations that must be examined.

(a) Use the 60 degree transducer identified in Paragraph 2.C.(1) and set the instrument frequency in the 4 to 6 MHz range.

(b) Put couplant on reference standard NDT3166-006 at transducer position 1 (TP1) and TP2 as shown in Figure 4.

(c) Put the transducer at TP1 and move it as necessary to get a maximum signal from the top edge of the hole in leg II of the sound path. See Figure 4 for the approximate surface distance between the transducer and the hole when leg II of the sound path is used. This distance can be different for transducers that are not exactly 60 degrees.

BOEING PROPRIETARY - Copyright © Unpublished Work - See title page for details

(d) Adjust the instrument controls to set the initial pulse at 0% of full screen width (FSW) and the maximum signal from the upper surface of the hole at 70% of FSW. Add gain to set the hole signal to approximately 80% of full screen height (FSH). See Detail I in Figure 4.

(e) Slowly turn the transducer in the direction of the through notch (the TP2 location). See that the signal from the notch comes into view to the right of the signal from the hole and increases in FSH as the signal from the hole decreases in FSH. This signal will occur at approximately 74 percent of FSW as shown in Detail II in Figure 4.

(f) With the transducer at TP2, adjust the gain to set the maximum signal from the reference notch to 80 percent of FSH as shown in Detail II in Figure 4.

(g) Add 12 dB. Make a record of the instrument gain that is used.

(2) Calibrate the instrument to examine all Code ‘B’ fastener locations in the web flange at rib 1 and rib 6, at the six slat can assemblies identified in Figure 1, Views D and E, and the hidden fastener locations in the skin flange at rib 6 as shown in Figure 1, View B.

(a) Use the 70 degree transducer identified in Paragraph 2.C.(2) and set the instrument frequency in the 4 to 6 MHz range.

(b) Put a small quantity of couplant on reference standard NDT3166-006 at transducer position 1 (TP1) and TP2 as shown in Figure 5.

(c) Put the transducer at TP1 and move it as necessary to get a maximum signal from the bottom edge of the hole in leg III of the sound path. See Figure 5 for the approximate surface distance between the transducer and the hole when leg III of the sound path is used. This distance can be different for transducers that are not exactly 70 degrees.

(d) Adjust the instrument controls to set the initial pulse at 0% of FSW and the maximum signal from the upper surface of the hole at 40% of FSW. Add gain to set the maximum signal to approximately 90% of full screen height (FSH). See Detail I in Figure 5.

(e) Slowly turn the transducer in the direction of the through notch (the TP2 location). See that the signal from the notch comes into view to the right of the signal from the hole and increases in FSH as the signal from the hole decreases in FSH. This signal will occur at approximately 42 percent of FSW as shown in Detail II in Figure 5.

(f) With the transducer at TP2, adjust the gain to set the maximum signal from the reference notch to 80 percent of FSH as shown in Detail II in Figure 5.

(g) Add 12 dB. Make a record of the instrument gain that is used.

(3) Calibrate the instrument to examine all Code "A" hidden and non-hidden fastener locations in the skin flange from ribs 19 thru 25 and the hidden fastener locations in the web flange from ribs 19 thru 25. See Figure 1, Views C and E for typical Code "A" fastener locations.

(a) Use the 60 degree transducer identified in Paragraph 2.C.(3) and set the instrument frequency in the 4 to 6 MHz range.

(b) Put couplant on reference standard NDT3166-003 at transducer positions 1 (TP1) and TP2 as shown in Figure 6.

(c) Put the transducer at TP1 and move it as necessary to get a maximum signal from the bottom edge of the hole in leg III of the sound path. See Figure 6 for the approximate surface distance between the transducer and the hole when leg III of the sound path is used. This distance can be different by a small quantity for transducers that are not exactly 60 degrees.

(d) Adjust the instrument delay and range controls so that the initial pulse signal is set at 0 percent of full screen width (FSW) and the maximum signal from the hole (in leg II) is set at 60 percent of FSW as shown in Figure 6, Detail I.

BOEING PROPRIETARY - Copyright © Unpublished Work - See title page for details

(e) Move the transducer laterally to transducer position 2 (TP2) as shown in Figure 6 and get a maximum signal from the through notch. Do not move the transducer to or away from the notch when you do this, only move it laterally. This signal will occur at approximately 68 percent of FSW as shown in Figure 6, Detail II.

(f) Adjust the gain control to set the notch signal to 80 percent of full screen height (FSH) as shown in Figure 6, Detail II.

(g) Add 12 dB. Make a record of the instrument gain that is used.

5. **Inspection Procedure**

A. Examine all Code "A" hidden fastener locations in the web flange between ribs 1 and 19, the Code “A” hidden fastener locations in the skin flange between ribs 1 and 19 and the non-hidden Code “A” fastener locations in the skin flange between ribs 1 thru 5 and 7 thru 19. See Figure 1, Views C, D and E for typical Code "A" fastener locations.

(1) Identify the inspection areas shown in Figure 1 and identify a location to start the inspection.

(2) Make sure the instrument is calibrated as specified in Paragraph 4.A.(1).

(3) Put couplant on the applicable flange of the lower chord at the front spar in the area to be examined.

(4) Put the transducer on the lower chord so that it is adjacent to the fastener hole location to be examined, and move the transducer as necessary to get a signal from the fastener hole. This signal can occur between 15 and 95% of FSW. The position where the fastener hole signal occurs on the screen display is a function of the distance between the transducer and the applicable fastener and the thickness of the lower chord at that location.

NOTE: (1) If you cannot easily see the signal from the fastener hole, add gain as necessary to set the signal to approximately 30 percent of FSH. If you add gain, make sure that you set the instrument gain back to the quantity recorded in Paragraph 4.A.(1)(g) before you examine subsequent fastener holes.

NOTE: (2) It will be necessary to move the transducer around the fasteners in the transducer inspection areas to examine the fastener locations. At each fastener location, try to keep the transducer as perpendicular to the possible crack location as you can.

(5) Slowly turn the transducer as necessary to point the sound beam to the side of the fastener hole that is nearest the transducer. Carefully monitor the signal from the hole as you do this. If there is a crack, the signal from the crack will come into view to the right of the hole signal and increase in FSH as the signal from the hole decreases in FSH. Turn the transducer until the hole signal decreases to 0 percent of FSH. If a crack signal occurs, move the transducer as necessary to get a maximum crack signal.

NOTE: The location where a crack signal occurs in relation to the hole signal will be different for different diameter fasteners. As the fastener diameter decreases, the distance between the hole and the possible crack signal will also decrease. You can see this occur if you examine the small hole in the reference standard.

(6) Put the transducer at the best location to examine the opposite side of this same fastener hole. Get a maximum signal from the hole and slowly turn the transducer as necessary to point it to the side of the fastener hole that is nearest the transducer. Carefully monitor the signal from the hole as you do this. Turn the transducer until the hole signal decreases to 0 percent of FSH. If a crack signal occurs, move the transducer as necessary to get a maximum signal from the crack.

NOTE: It is acceptable to do a lateral scan at all fastener locations where there is sufficient space to do this. See flagnote 1 in Figure 1.

BOEING PROPRIETARY - Copyright © Unpublished Work - See title page for details

(7) Do Paragraph 5.A.(3) thru Paragraph 5.A.(6) again to examine all applicable fastener locations.

NOTE: Do a check of the instrument calibration every 30 minutes and after the inspection is completed. If the sensitivity has changed, calibrate the instrument again and do the inspection at all areas that were examined since the last calibration check.

(8) Do Paragraph 5.A.(3) thru Paragraph 5.A.(7) again at all inspection areas identified in Figure 1 on the left and right wings.

(9) Go to Paragraph 6. for instructions to help make an analysis of all possible crack signals that are 40 percent or more of FSH. Possible crack signals are those signals that occur to the right of the hole signal and are almost the same as the notch signals that occur on the reference standards.

B. Examine all Code 'B' hidden fastener locations in the web flange at rib 1 and rib 6, at the six slat can assemblies identified in Figure 1, Views D and E, and the hidden fastener locations in the skin flange at rib 6 as shown in Figure 1, View B.

(1) Do Paragraph 5.A.(1) thru Paragraph 5.A.(9) again, but:

(a) In Paragraph 5.A.(2), calibrate the instrument as specified in Paragraph 4.A.(2), not Paragraph 4.A.(1).

(b) In Paragraph 5.A.(4), NOTE (1), use the gain recorded in Paragraph 4.A.(2)(g), not Paragraph 4.A.(1)(g).

C. Examine all Code "A" hidden and non-hidden fastener locations in the skin flange from ribs 19 thru 25 and the hidden fastener locations in the web flange from ribs 19 thru 25. See Figure 1, Views C and E for typical Code "A" fastener locations.

(1) Do Paragraph 5.A.(1) thru Paragraph 5.A.(9) again, but:

(a) In Paragraph 5.A.(2), calibrate the instrument as specified in Paragraph 4.A.(3), not Paragraph 4.A.(1).

(b) In Paragraph 5.A.(4), NOTE (1), use the gain recorded in Paragraph 4.A.(3)(g), not Paragraph 4.A.(1)(g).

6. Inspection Results

A. A signal that is 40 percent or more of FSH that occurs to the right of the hole signal and increases in FSH as the signal from the hole begins to decrease in FSH (or immediately after it decreases to zero percent of FSH) is a possible crack signal. It is necessary to do more analysis of these signals. Go to Paragraph 6.D. and continue to make an analysis of these possible crack signals.

NOTE: Do not remove the 12 dB that was added at the end of the calibration instructions. This additional gain is necessary to adjust for the loss of ultrasound that occurs from the sealant that is between the parts to be examined.

B. At fastener holes where possible crack signals are less than 40% of FSH, try to turn and move the transducer to get the signal height to increase. This is only possible where there is sufficient access to do this.

NOTE: It is very possible that cracks that are smaller than the reference notch will have a signal that is less than 40 percent of FSH. Thus, make a careful record of all possible cracks that are less than 40 percent of FSH to refer to during the subsequent inspection interval.

C. Do a check of the instrument calibration to make sure the sensitivity has not changed. If the sensitivity has changed, calibrate the instrument and do the inspection again at the areas that cause crack signals to occur that are 40% of FSH or more.

D. Identify if the crack signal is caused by couplant on the part surface as follows:

BOEING PROPRIETARY - Copyright © Unpublished Work - See title page for details

(1) Get a maximum signal from the possible crack and keep the transducer at that location.

(2) Remove all couplant that is between the front of the transducer and the inspection area.

(3) If the signal goes away, no more analysis is necessary. If the signal continues to stay, go to Paragraph 6.E. and continue to make an analysis of the possible crack signal.

E. Compare the possible crack signal to the signal that you get from the notch in the reference standard. Because the reference standard thickness will be different from the thickness of the lower chord, you can only compare how the possible crack signal occurs in relation to the hole signal.

F. For possible crack signals that are 40% of FSH or more, remove the fastener and do an open hole eddy current inspection as specified in Part 6, 51-00-00, Procedure 16 to make sure there is a crack.

BOEING PROPRIETARY - Copyright © Unpublished Work - See title page for details

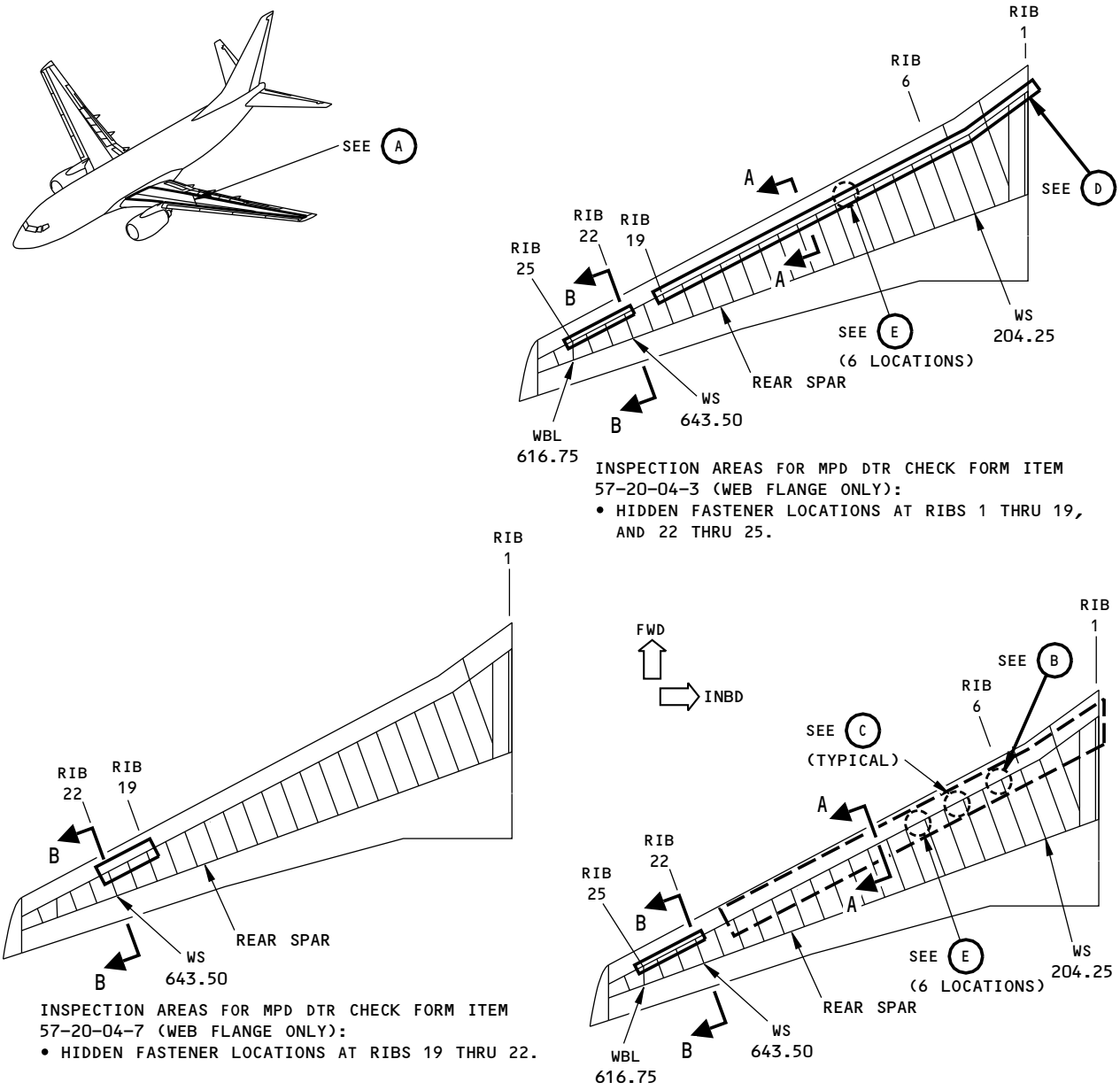

Inspection Areas
Figure 1 (Sheet 1 of 4)

BOEING PROPRIETARY - Copyright © Unpublished Work - See title page for details

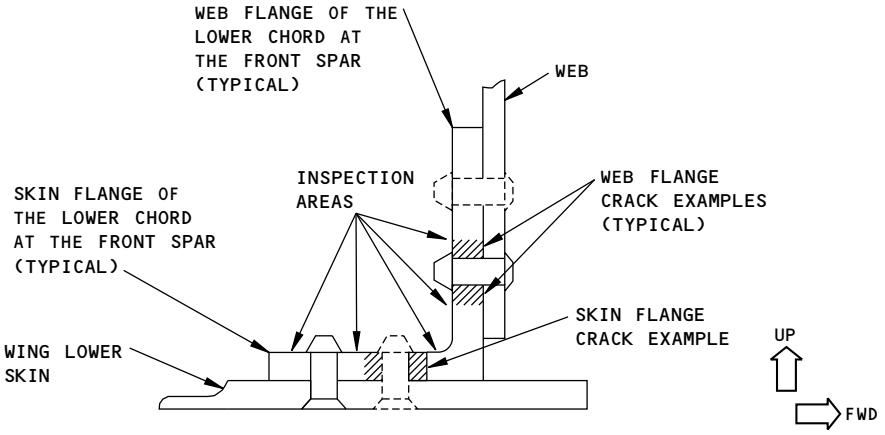

NON-HIDDEN INSPECTION AREAS
(TYPICAL BETWEEN RIB 1 TO 25)
A-A

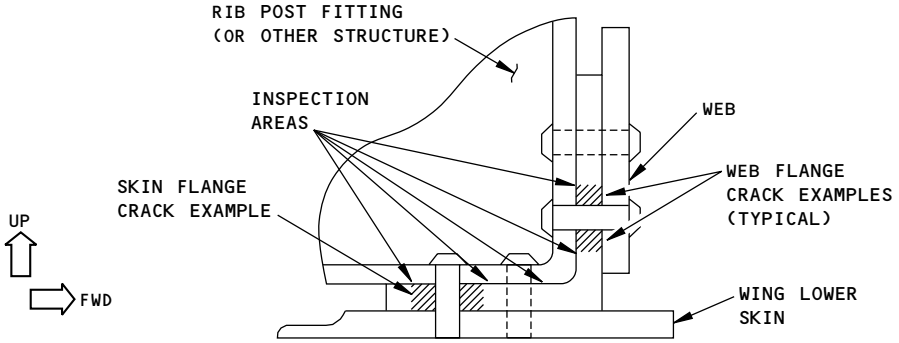

HIDDEN INSPECTION AREAS
(TYPICAL BETWEEN RIB 1 TO 25)
B-B

NOTES:

- SEALANT REMOVAL IS NECESSARY WHERE THE TRANSDUCER MUST TOUCH THE PART SURFACE.

2231431 S0000497449_V1

Inspection Areas
Figure 1 (Sheet 2 of 4)

BOEING PROPRIETARY - Copyright © Unpublished Work - See title page for details

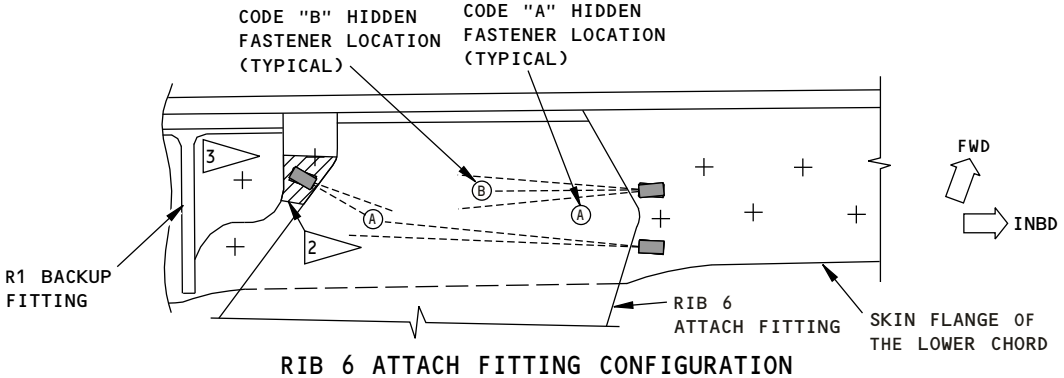

RIB 6 ATTACH FITTING CONFIGURATION

B

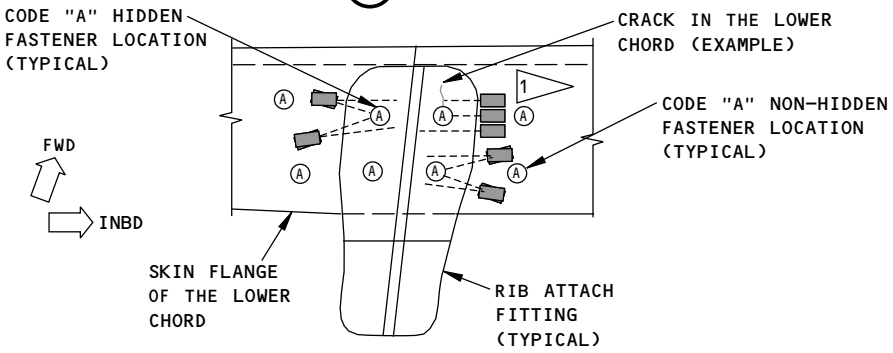

RIB ATTACH FITTING CONFIGURATION
(TYPICAL)

C

NOTES:

- THE ABOVE ARE EXAMPLES THAT SHOW HOW TO EXAMINE THE HIDDEN AND NON-HIDDEN FASTENER LOCATIONS THAT ARE IN THE INSPECTION AREAS SHOWN IN VIEW A. ALL OF THE FASTENER LOCATIONS THAT MUST BE EXAMINED ARE NOT SHOWN ABOVE.
- REMOVE THE MINIMUM QUANTITY OF SEALANT THAT IS NECESSARY TO FULLY EXAMINE EACH APPLICABLE FASTENER LOCATION. APPLY NEW SEALANT AT ALL LOCATIONS WHERE SEALANT WAS REMOVED FOR THIS INSPECTION.

(A) CODE "A" HIDDEN AND NON-HIDDEN FASTENER LOCATIONS ARE FASTENER LOCATIONS THAT ARE DIRECTLY ADJACENT TO THE TRANSDUCER AND CAN BE FOUND WITH THE CALIBRATION GIVEN IN PARAGRAPH 4.A.(1).

(B) CODE "B" FASTENER LOCATIONS ARE FASTENER LOCATIONS THAT ARE TOO FAR AWAY TO BE FOUND WITH THE PARAGRAPH 4.A.(1) CALIBRATION. THESE FASTENER LOCATIONS MUST BE EXAMINED WITH THE CALIBRATION GIVEN IN PARAGRAPH 4.A.(2).

- THE LEFT WING AREAS ARE SHOWN; THE RIGHT WING AREAS ARE OPPOSITE.
- WHEN A POSSIBLE CRACK SIGNAL OCCURS THAT IS LESS THAN 40% OF FSH, DO MORE SCANS AT DIFFERENT ANGLES TO BE SURE THAT YOU GET THE MAXIMUM SIGNAL FROM THE POSSIBLE CRACK.

1 IT IS ACCEPTABLE TO DO A LATERAL SCAN AT ALL FASTENER LOCATIONS WHERE THERE IS SUFFICIENT SPACE TO DO THIS.

2 REMOVE SEALANT FROM THIS AREA TO MAKE SPACE FOR THE TRANSDUCER TO EXAMINE THE FORWARD SIDE OF THIS FASTENER.

3 REFER TO MPD DTR CHECK FORM ITEM 57-20-04-9 TO EXAMINE THE R1 BACKUP FITTING FASTENER LOCATIONS.

INSPECTION DETAILS FOR THE SKIN FLANGE INSPECTIONS
OF THE LOWER CHORD OF THE FRONT SPAR

2174778 S0000477809_V2

Inspection Areas
Figure 1 (Sheet 3 of 4)

BOEING PROPRIETARY - Copyright © Unpublished Work - See title page for details

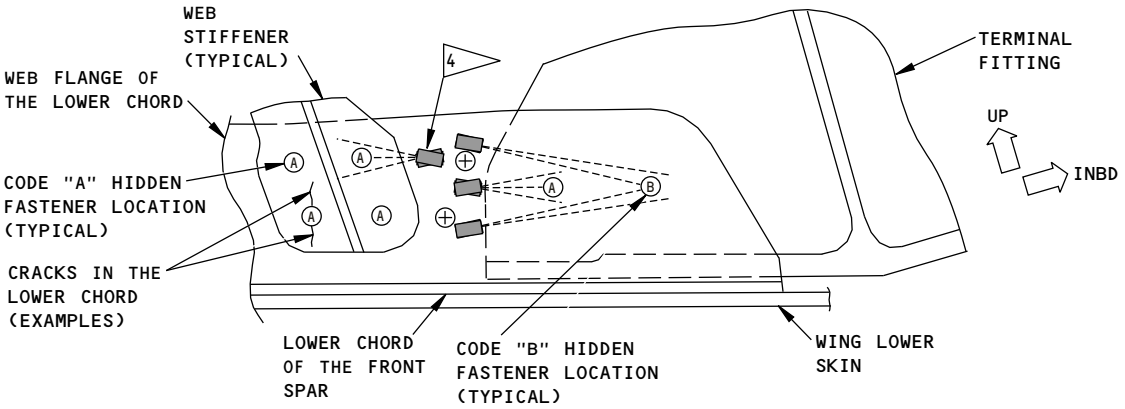

RIB 1 CONFIGURATION

D

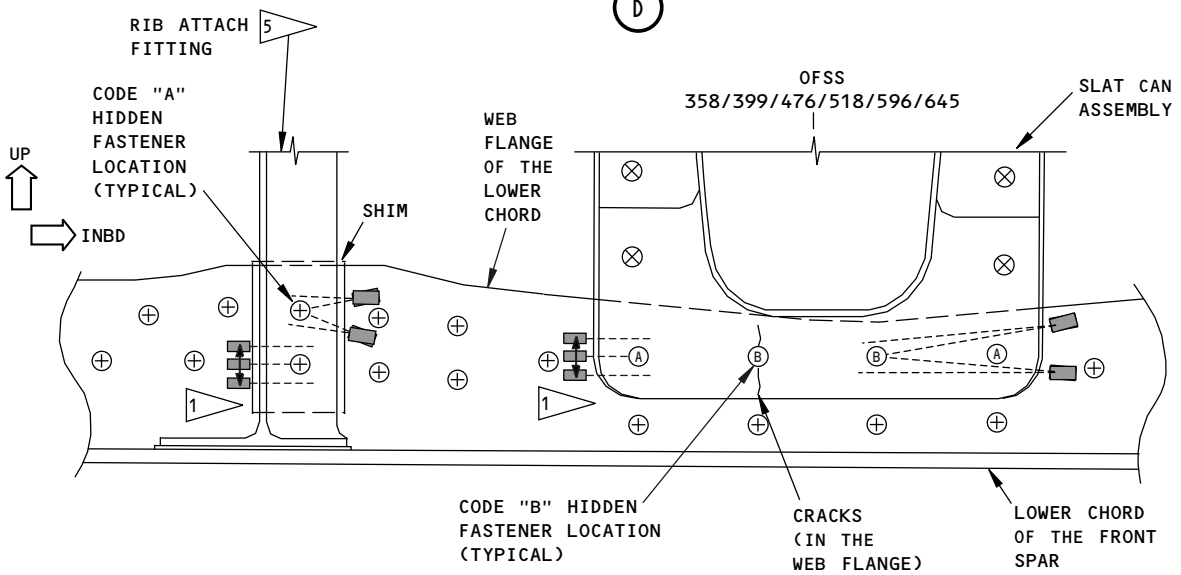

OUTBOARD FRONT SPAR STATIONS (OFSS)
358,399,476,518,596 AND 645
CONFIGURATION

E

NOTES:

4 BE SURE TO ALIGN THE TRANSDUCER PERPENDICULAR TO THE DIRECTION THAT CRACKS CAN GROW. DO NOT ALIGN THE TRANSDUCER TO ADJACENT STRUCTURE UNLESS IT IS PARALLEL TO THE DIRECTION THAT CRACKS CAN GROW.

5 THIS FITTING IS NOT AT ALL OF THE SPECIFIED FRONT SPAR STATIONS.

INSPECTION DETAILS FOR THE WEB FLANGE INSPECTIONS OF THE LOWER CHORD OF THE FRONT SPAR

2175104 S0000477810_V3

Inspection Areas
Figure 1 (Sheet 4 of 4)

BOEING PROPRIETARY - Copyright © Unpublished Work - See title page for details

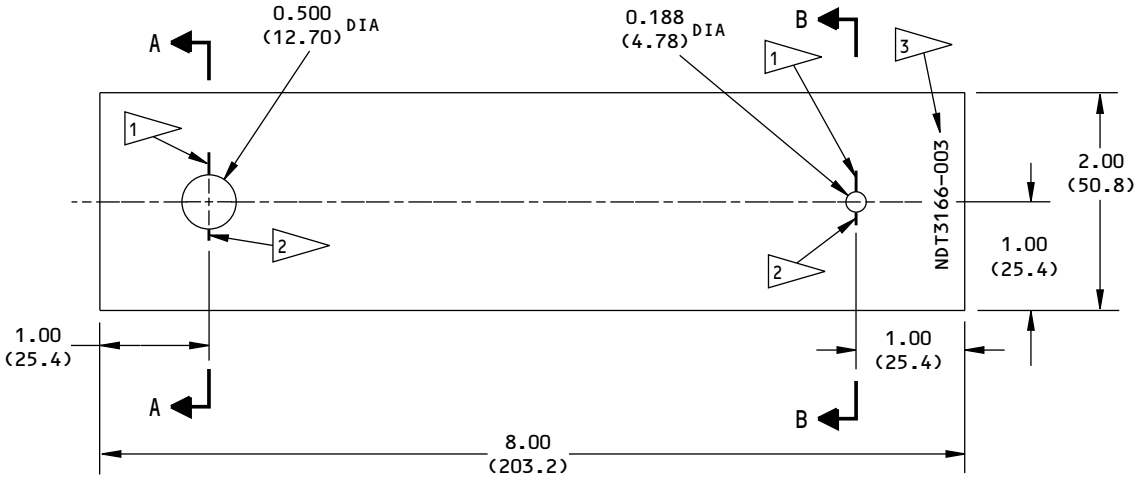

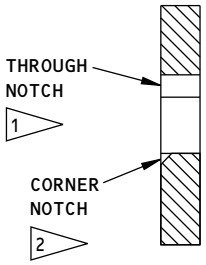

A-A

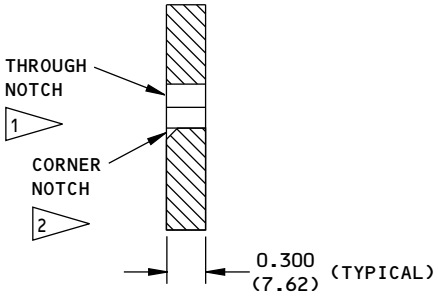

B-B

NOTES:

- ALL DIMENSIONS ARE IN INCHES (MILLIMETERS ARE IN PARENTHESES)
- TOLERANCE (UNLESS SPECIFIED DIFFERENTLY):

INCHES	MILLIMETERS	ANGULAR
X.XXX = ±0.005	X.XX = ±0.10	±1°
X.XX = ±0.025	X.X = ±0.5	
X.X = ±0.050	X = ±1	

- MATERIAL: AIRPLANE QUALITY ALUMINUM SUCH AS 2024, 7075-T6
- SURFACE ROUGHNESS: 125 Ra OR BETTER

1 EDM THROUGH NOTCH: 0.200 (5.08) X 0.007 (0.18) WIDE ±0.003 (0.08)

2 EDM CORNER NOTCH: 0.100 (2.54) X 0.100 (2.54) X 0.007 (0.18) WIDE ±0.003 (0.08)

3 ETCH OR STAMP THE REFERENCE STANDARD NUMBER, NDT3166-003, AT APPROXIMATELY THIS LOCATION.

2175105 S0000477811_V2

Reference Standard NDT3166-003
Figure 2

BOEING PROPRIETARY - Copyright © Unpublished Work - See title page for details

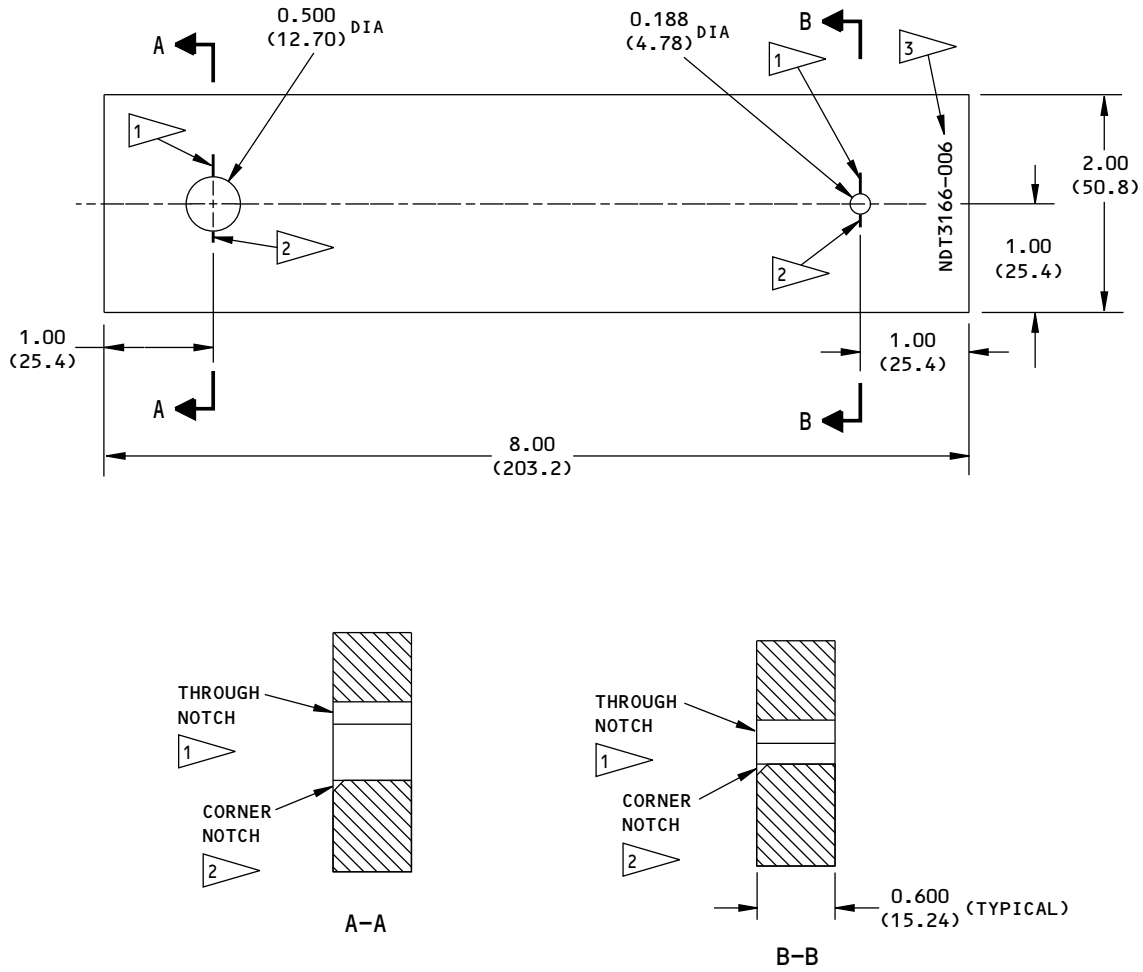

NOTES:

- ALL DIMENSIONS ARE IN INCHES (MILLIMETERS ARE IN PARENTHESES)
- TOLERANCE (UNLESS SPECIFIED DIFFERENTLY):

INCHES	MILLIMETERS	ANGULAR
X.XXX = ±0.005	X.XX = ±0.10	±1°
X.XX = ±0.025	X.X = ±0.5	
X.X = ±0.050	X = ±1	

- MATERIAL: AIRPLANE QUALITY ALUMINUM SUCH AS 2024, 7075-T6
- SURFACE ROUGHNESS: 125 Ra OR BETTER

1 EDM THROUGH NOTCH: 0.200 (5.08) X 0.007 (0.18) WIDE ±0.003 (0.08)

2 EDM CORNER NOTCH: 0.100 (2.54) X 0.100 (2.54) X 0.007 (0.18) WIDE ±0.003 (0.08)

3 ETCH OR STAMP THE REFERENCE STANDARD NUMBER, NDT3166-006, AT APPROXIMATELY THIS LOCATION.

2231297 S0000497459_V1

Reference Standard NDT3166-006
Figure 3

BOEING PROPRIETARY - Copyright © Unpublished Work - See title page for details

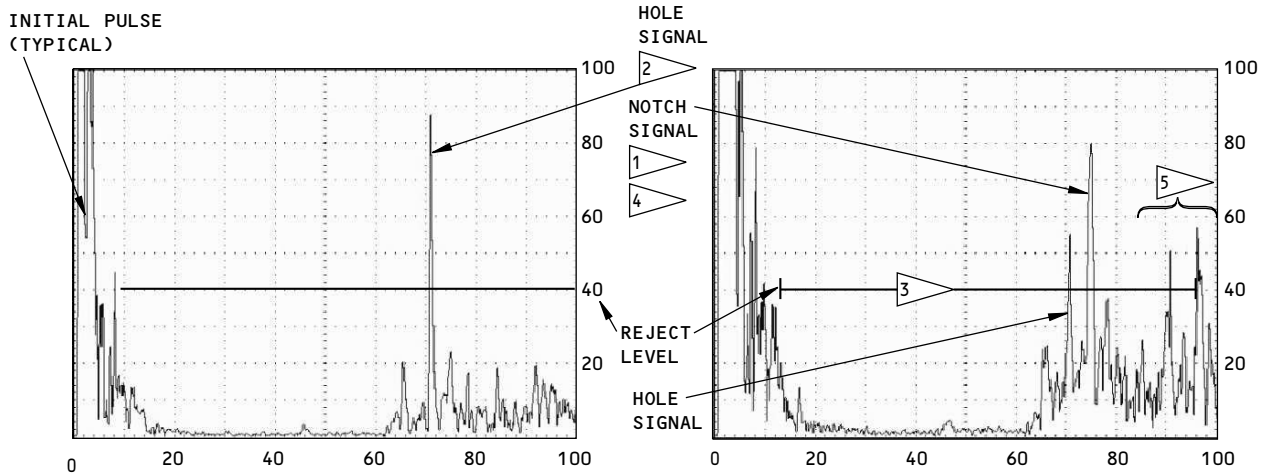

SIGNAL FROM THE HOLE WITH THE TRANSDUCER AT POSITION TP1
DETAIL I

SIGNAL FROM THE NOTCH WITH THE TRANSDUCER AT POSITION TP2
DETAIL II

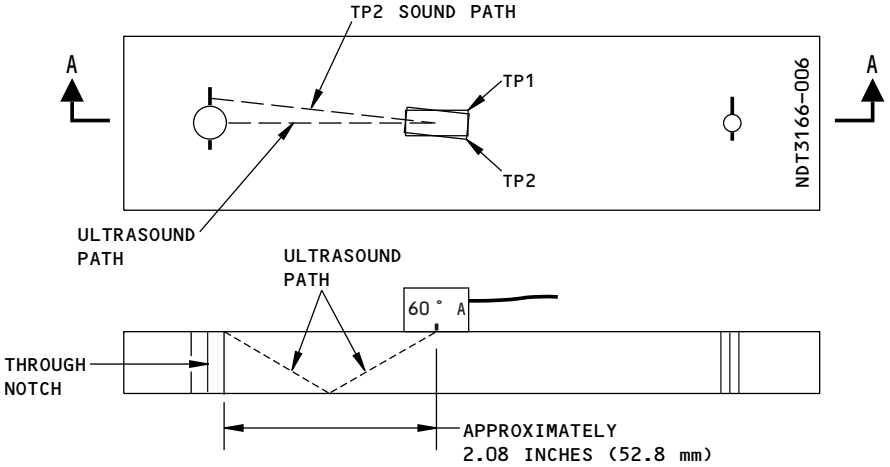

A-A

NOTES:

- TP = TRANSDUCER POSITION
- USE THE THROUGH NOTCH FOR THIS CALIBRATION.

1 SEE HOW AND WHERE THE NOTCH SIGNAL OCCURS ON THE SCREEN IN RELATION TO THE HOLE SIGNAL.

2 BECAUSE THE THICKNESS OF THE LOWER CHORD OF THE FRONT SPAR CHANGES AT DIFFERENT LOCATIONS IN THE INSPECTION AREAS, THE FSW LOCATION OF THE FASTENER HOLE SIGNALS WILL ALSO BE DIFFERENT.

3 LOCATION WHERE THE FASTENER HOLE AND CRACK SIGNALS CAN OCCUR. SIGNALS THAT ARE 40% OR MORE OF FSH THAT OCCUR TO THE RIGHT OF THE HOLE SIGNAL ARE POSSIBLE CRACK SIGNALS AND MORE ANALYSIS IS NECESSARY.

4 THE LOCATION WHERE A CRACK SIGNAL OCCURS IN RELATION TO THE HOLE SIGNAL WILL BE DIFFERENT FOR DIFFERENT DIAMETER FASTENERS. AS THE FASTENER DIAMETER DECREASES, THE DISTANCE BETWEEN THE HOLE AND THE NOTCH SIGNALS WILL DECREASE. YOU CAN SEE THIS OCCUR IF YOU EXAMINE THE SMALL HOLE IN THE REFERENCE STANDARD.

5 THESE SIGNALS ARE CAUSED BY SOUND REFLECTIONS IN THE REFERENCE STANDARD AND WILL NOT OCCUR DURING THE INSPECTIONS.

2175106 S0000477812_V2

Instrument Calibration for Code "A" Inspection Fastener Locations Identified in Paragraph 4.A.(1)
Figure 4

BOEING PROPRIETARY - Copyright © Unpublished Work - See title page for details

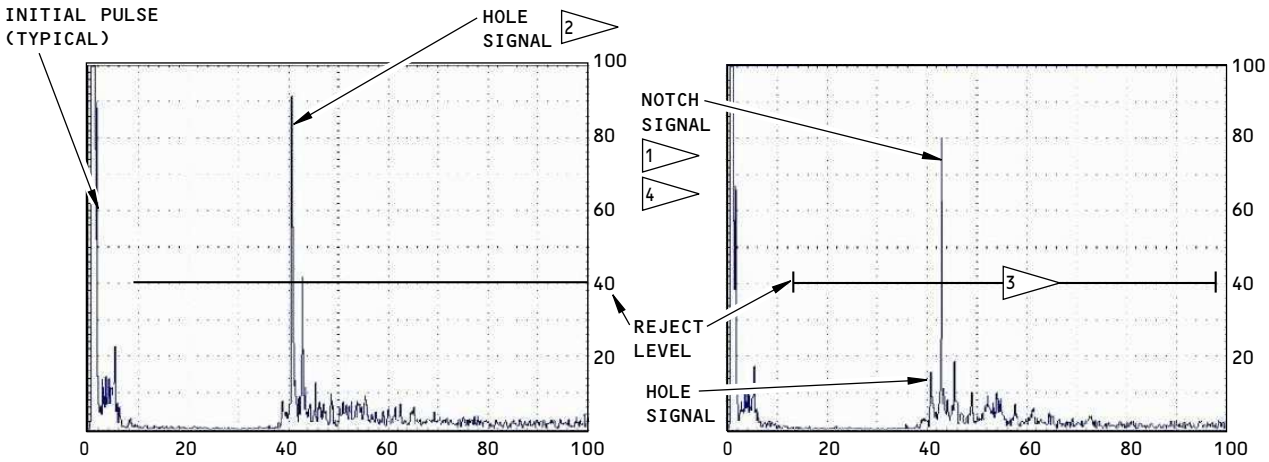

SIGNAL FROM THE HOLE WITH THE TRANSDUCER AT POSITION TP1
DETAIL I

SIGNAL FROM THE THROUGH NOTCH WITH THE TRANSDUCER AT POSITION TP2
DETAIL II

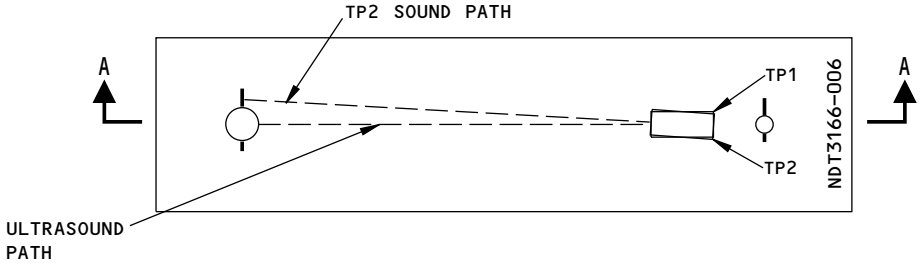

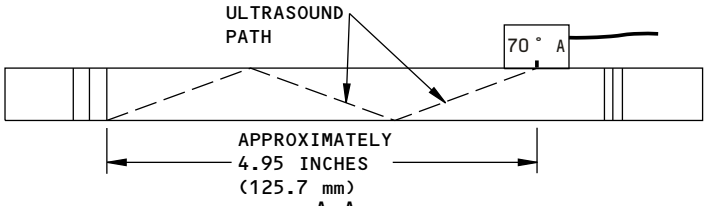

A–A

NOTES:

- TP = TRANSDUCER POSITION
- USE THE THROUGH NOTCH FOR THIS CALIBRATION.

1 SEE HOW AND WHERE THE NOTCH SIGNAL OCCURS ON THE SCREEN IN RELATION TO THE HOLE SIGNAL.

2 BECAUSE THE THICKNESS OF THE LOWER CHORD CHANGES AT DIFFERENT LOCATIONS IN THE INSPECTION AREAS, THE FSW LOCATION OF THE FASTENER HOLE SIGNALS WILL ALSO BE DIFFERENT.

3 LOCATION WHERE THE FASTENER HOLE AND CRACK SIGNALS CAN OCCUR. SIGNALS THAT ARE 40% OR MORE OF FSH THAT OCCUR TO THE RIGHT OF THE HOLE SIGNAL ARE POSSIBLE CRACK SIGNALS AND MORE ANALYSIS IS NECESSARY.

4 THE LOCATION WHERE A CRACK SIGNAL OCCURS IN RELATION TO THE HOLE SIGNAL WILL BE DIFFERENT FOR DIFFERENT DIAMETER FASTENERS. AS THE FASTENER DIAMETER DECREASES, THE DISTANCE BETWEEN THE HOLE AND THE NOTCH SIGNALS WILL DECREASE. YOU CAN SEE THIS OCCUR IF YOU EXAMINE THE SMALL HOLE IN THE REFERENCE STANDARD.

2175107 S0000477813_V2

Instrument Calibration for Code "B" Inspection Fastener Locations
Figure 5

BOEING PROPRIETARY - Copyright © Unpublished Work - See title page for details

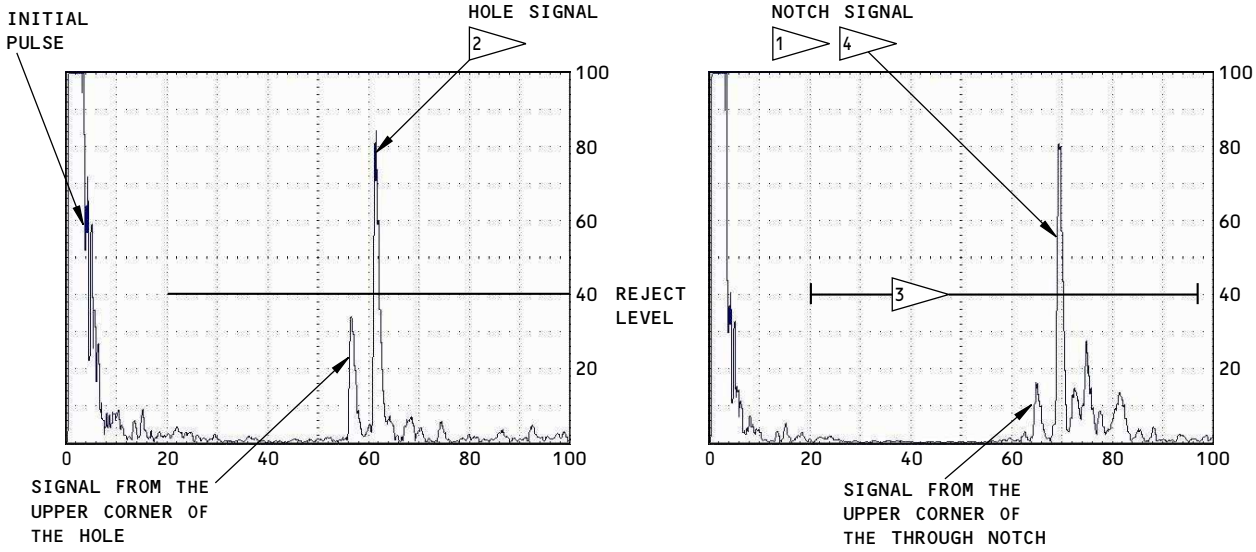

SIGNAL FROM THE HOLE WITH THE TRANSDUCER AT POSITION TP1
DETAIL I

SIGNAL FROM THE NOTCH WITH THE TRANSDUCER AT POSITION TP2
DETAIL II

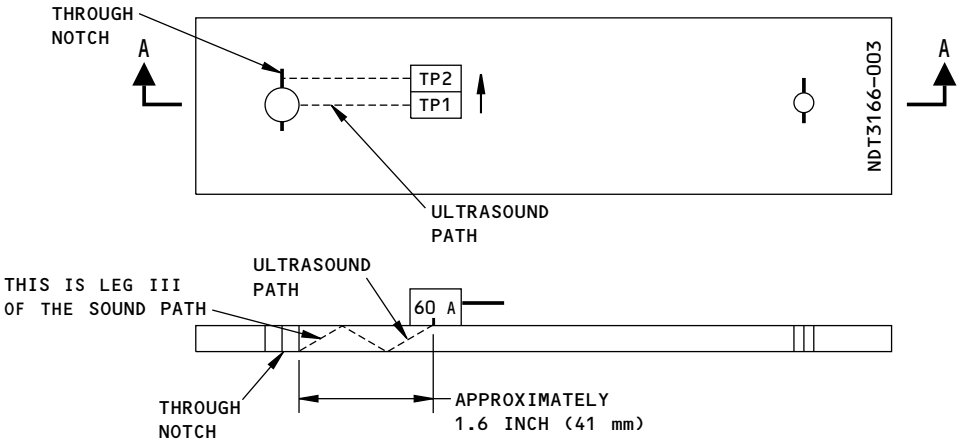

A-A

NOTES:

- TP=TRANSDUCER POSITION

1 SEE HOW AND WHERE THE NOTCH SIGNAL OCCURS ON THE SCREEN IN RELATION TO THE HOLE SIGNAL.

2 BECAUSE THE THICKNESS OF THE STRINGER IS DIFFERENT AT SOME INSPECTION AREAS, THE FSW LOCATION OF THE FASTENER HOLE SIGNALS WILL ALSO BE DIFFERENT.

3 THE LOCATION WHERE FASTENER HOLE AND CRACK SIGNALS CAN OCCUR. SIGNALS THAT ARE EQUAL TO OR MORE THAN 40% OF FSH THAT OCCUR TO THE RIGHT OF THE HOLE SIGNAL ARE POSSIBLE CRACK SIGNALS AND MORE ANALYSIS IS NECESSARY.

4 THE LOCATION WHERE A CRACK SIGNAL OCCURS IN RELATION TO THE HOLE SIGNAL WILL BE DIFFERENT FOR DIFFERENT FASTENER DIAMETERS. AS THE FASTENER DIAMETER DECREASES, THE DISTANCE BETWEEN THE HOLE AND THE NOTCH SIGNALS WILL DECREASE. YOU CAN SEE THIS OCCUR IF YOU EXAMINE THE SMALL HOLE IN THE REFERENCE STANDARD.

2231315 S0000497462_V1

Instrument Calibration for Code "A" Inspection Fastener Locations Identified in Paragraph 4.A.(3)
Figure 6

BOEING PROPRIETARY - Copyright © Unpublished Work - See title page for details

PART 4 - ULTRASONIC

OUTER WING - SKIN AND WEB FLANGES OF THE UPPER CHORD OF THE REAR SPAR

1. Purpose

A. Use this procedure to help examine the web and skin flanges of the upper chord for cracks at the rear spar of the outer wing. The upper chord is examined at the fastener locations that are hidden by stiffeners, rib posts, and other fittings. The inspection area is from rib 1 to rib 13 on the left and right wings. See Figure 1 for the inspection areas.

B. The upper chord is aluminum.

C. 737 Maintenance Planning Document (MPD) Damage Tolerance Record (DTR) Check Form Reference:

(1) Item: 57-20-17-2

(2) Item: 57-20-17-4

2. Equipment

A. General

(1) All ultrasonic equipment that can be calibrated as specified in Paragraph 4. can be used to do this inspection.

(2) Refer to Part 1, 51-01-00, for data about the equipment manufacturers.

B. Instrument

(1) Use an ultrasonic instrument that:

(a) Operates in the pulse-echo mode.

(b) Operates in a frequency range of 4 to 6 MHz.

NOTE: Broadband instruments can be used if they can be calibrated as specified in this procedure.

(2) The instrument that follows was used to help prepare this procedure.

(a) USM Go; GE

C. Transducers - Two 5 MHz transducers with top-mounted connectors are necessary to do this inspection. One transducer that puts a 60 degree refracted shear wave into aluminum and one that puts a 70 degree refracted shear wave into aluminum. Use transducers that have a maximum length of 0.75 inch (19.1 mm) and a maximum width of 0.38 inch (9.5 mm). The transducers that follow were used to help prepare this procedure.

(1) SUSM 560AT (60°A), 5 MHz; Olympus

(2) 389-020-490 (70°A), 5 MHz; KBA/GE

(3) MA-705T (70°A); Techna NDT

D. Reference Standard - Use reference standard NDT3166-007. See Figure 2 for data about this reference standard.

E. Couplant

(1) Use an ultrasonic couplant that will not cause corrosion or other damage to the airplane.

BOEING PROPRIETARY - Copyright © Unpublished Work - See title page for details

3. **Prepare for the Inspection**

WARNING: PERSONNEL WHO ENTER A FUEL TANK MUST KNOW THE PRECAUTIONS AND SAFETY PROCEDURES CONTAINED IN CHAPTER 28 OF THE BOEING AIRCRAFT MAINTENANCE MANUAL. DANGEROUS FUMES AND THE POSSIBILITY OF AN EXPLOSION EXIST IN THE FUEL TANKS.

A. Remove sealant as necessary to fully examine the applicable fastener holes. Clean the inspection surface if necessary.

B. If there is loose paint or paint chips, smooth the area as necessary by an approved procedure that will not damage the airplane.

C. At the completion of this inspection, replace all sealant that was removed.

4. **Instrument Calibration**

A. Two instrument calibrations are necessary to fully examine the inspection areas identified in Figure 1.

(1) Calibrate the instrument to examine all Code “A” hidden fastener locations identified in Figure 1. The Code “A” fastener locations shown in Figure 1 are examples of typical inspections areas and does not show all locations that must be examined.

(a) Use the 60 degree transducer and set the instrument frequency in the 4 to 6 MHz range.

(b) Put couplant on the reference standard at transducer position 1 (TP1) and TP2 as shown in Figure 3.

(c) Put the transducer at TP1 and move it as necessary to get a maximum signal from the top edge of the hole. The approximate surface distance between the transducer and the hole is given in Figure 3. This distance can be different for transducers that are not exactly 60 degrees.

(d) Adjust the instrument controls to set the initial pulse at 0% of full screen width (FSW) and the maximum signal from the upper surface of the hole at 70% of FSW. Add gain to set the hole signal to approximately 80% of full screen height (FSH). See Detail I in Figure 3.

(e) Slowly turn the transducer in the direction of the through notch (the TP2 location). See that the signal from the notch comes into view to the right of the signal from the hole and increases in FSH as the signal from the hole decreases in FSH. This signal will occur at approximately 74 percent of FSW as shown in Detail II in Figure 3.

(f) With the transducer at TP2, adjust the gain to set the maximum signal from the reference notch to 80 percent of FSH as shown in Detail II in Figure 3.

(g) Add 12 dB. Make a record of the instrument gain that is used.

(2) Calibrate the instrument to examine all Code “B” hidden fastener hole locations identified in Figure 1.

(a) Use the 70 degree transducer and set the instrument frequency in the 4 to 6 MHz range.

(b) Put a small quantity of couplant on the reference standard at TP1 as shown in Figure 4.

(c) Put the transducer at TP1 and move it as necessary to get a maximum signal from the top edge of the hole. The approximate surface distance between the transducer and the hole is given in Figure 4. This distance can be different for transducers that are not exactly 70 degrees.

NOTE: If you cannot easily see the signal from the upper surface of the hole, see Figure 4, flagnote 5.

BOEING PROPRIETARY - Copyright © Unpublished Work - See title page for details

(d) Adjust the instrument controls to set the initial pulse at 0% of FSW and the maximum signal from the upper surface of the hole at 40% of FSW. Add gain to set the maximum signal to approximately 90% of FSH. Refer to Detail I in Figure 4.

(e) Slowly turn the transducer in the direction of the through notch (the TP2 location). See that the signal from the notch comes into view to the right of the signal from the hole and increases in FSH as the signal from the hole decreases in FSH. This signal will occur at approximately 42 percent of FSW as shown in Detail II in Figure 4.

(f) With the transducer at TP2, adjust the gain to set the maximum signal from the reference notch to 80 percent of FSH as shown in Detail II in Figure 4.

(g) Add 18 dB. Make a record of the instrument gain that is used.

5. Inspection Procedure

NOTE: This inspection looks for cracks that are fully through the web or skin flanges of the upper chord of the rear spar at the fastener locations hidden by stiffeners, rib posts, and other fittings. Thus, you can use the fastener hole signal from the upper surface, the lower surface, or between the upper and lower surfaces to do this inspection.

A. Examine all Code “A” hidden fastener locations (skin and web flanges) identified in Figure 1 as follows:

(1) Identify the inspection areas shown in Figure 1 and identify a location to start.

(2) Make sure the instrument is calibrated as specified in Paragraph 4.A.(1).

NOTE: Do a check of the instrument calibration every 30 minutes and after the inspection is completed. If the sensitivity has changed, calibrate the instrument again and do the inspection at all areas examined since the last calibration check.

(3) Put couplant on the applicable flange of the upper chord in the area to be examined.

(4) Put the transducer on the upper chord, adjacent to the fastener hole location to be examined, and move the transducer as necessary to get a signal from the fastener hole. This signal can occur between 15 and 95% of FSW. The position where the fastener hole signal occurs on the screen display is a function of the distance between the transducer and the applicable fastener, and the thickness of the upper chord at that location.

NOTE: (1) If you cannot easily see the signal from the fastener hole, add gain as necessary to set the signal to approximately 30 percent of FSH. If you add gain, make sure that you set the instrument gain back to the quantity recorded in Paragraph 4.A.(1)(g) before you examine subsequent fastener holes.

NOTE: (2) It will be necessary to move the transducer around the fasteners in the transducer inspection areas to examine the fastener locations in the inspection area. At each fastener location, try to keep the transducer as perpendicular to the possible crack location as you can.

(5) Slowly turn the transducer as necessary to point the sound beam to the side of the fastener hole that is nearest the transducer. Carefully monitor the signal from the hole as you do this. If there is a crack, the signal from the crack will come into view to the right of the hole signal and increase in FSH as the signal from the hole decreases in FSH. Turn the transducer until the hole signal decreases to 0 percent of FSH. If a crack signal occurs, then move the transducer as necessary to get a maximum crack signal.

NOTE: The location where a crack signal occurs in relation to the hole signal will be different for different diameter fasteners. As the fastener diameter decreases, the distance between the hole and the possible crack signals will also decrease. You can see this occur if you examine the small hole in the reference standard.

BOEING PROPRIETARY - Copyright © Unpublished Work - See title page for details

(6) Put the transducer at the best location on the upper chord to examine the opposite side of this same fastener hole. Get a maximum signal from the hole and slowly turn the transducer as necessary to point it to the side of the fastener hole that is nearest the transducer. Carefully monitor the signal from the hole as you do this. Turn the transducer until the hole signal decreases to 0 percent of FSH. If a crack signal occurs, then move the transducer as necessary to get a maximum signal from the crack.

NOTE: It is acceptable to do a lateral scan at all fastener locations where there is sufficient space to do this. See flagnote 1 in Figure 1.

(7) Do Paragraph 5.A.(3) thru Paragraph 5.A.(6) again to examine all applicable fastener locations.

(8) Do Paragraph 5.A.(3) thru Paragraph 5.A.(7) at all inspection areas identified in Figure 1 on the left and right wings.

(9) Go to Paragraph 6. for instructions to help make an analysis of all possible crack signals that are 40 percent or more of FSH. Possible crack signals are those signals that occur to the right of the hole signal and are almost the same as the notch signals that occur on the reference standards.

B. Examine all Code “B” hidden fastener locations identified in Figure 1 as follows:

(1) Do the instructions given in Paragraph 5.A.(1) thru Paragraph 5.A.(9), but:

(a) In Paragraph 5.A.(2), calibrate the instrument as specified in Paragraph 4.A.(2), not Paragraph 4.A.(1).

(b) In Paragraph 5.A.(4), NOTE (1), use the instrument gain recorded in Paragraph 4.A.(2)(g), not Paragraph 4.A.(1)(g).

6. Inspection Results

A. A signal that is 40 percent or more of FSH that occurs to the right of the hole signal and increases in FSH as the signal from the hole starts to decrease in FSH (or immediately after it decreases to zero percent of FSH) is a possible crack signal. It is necessary to do more analysis of these signals. Go to Paragraph 6.B. and continue to make an analysis of these possible crack signals.

NOTE: It is very possible that cracks that are smaller than the reference notch will have a signal that is less than 40 percent of FSH. Thus, make a careful record of all possible cracks that are less than 40 percent of FSH to refer to during the subsequent inspection interval.

B. Identify if the crack signal is caused by couplant on the part surface as follows:

(1) Get a maximum signal from the possible crack and keep the transducer at that location.

(2) Remove all couplant that is between the front of the transducer and the inspection area.

(3) If the signal goes away, no more analysis is necessary. If the signal continues to stay, go to Paragraph 6.C. and continue to make an analysis of the possible crack signal.

C. Compare the possible crack signal to the signal that you get from the notch in the reference standard. Because the reference standard thickness will be different from the thickness of the upper chord, you can only compare how the possible crack signal occurs in relation to the hole signal.

D. Remove the fastener and do an open hole eddy current inspection as specified in Part 6, 51-00-00, Procedure 16 to make sure there is a crack.

BOEING PROPRIETARY - Copyright © Unpublished Work - See title page for details

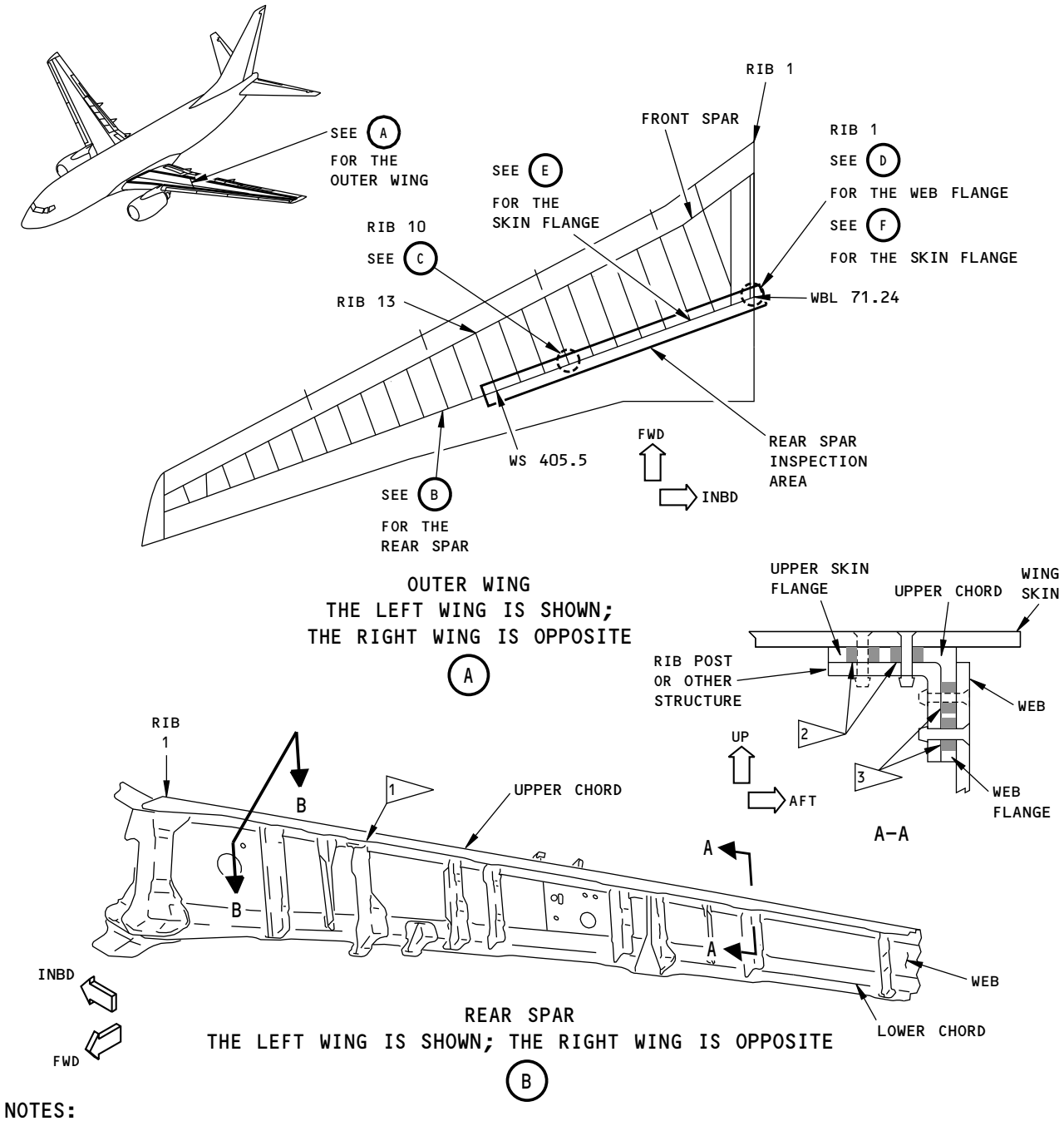

NOTES:

1. EXAMINE THE UPPER CHORD AT ALL HIDDEN LOCATIONS (WHERE THE UPPER CHORD IS HIDDEN FROM VIEW BY RIBS OR OTHER STRUCTURE)
2. UPPER SKIN FLANGE INSPECTION AREA
3. WEB FLANGE INSPECTION AREA

2175108 S0000478156_V2

Inspection Areas
Figure 1 (Sheet 1 of 3)

BOEING PROPRIETARY - Copyright © Unpublished Work - See title page for details

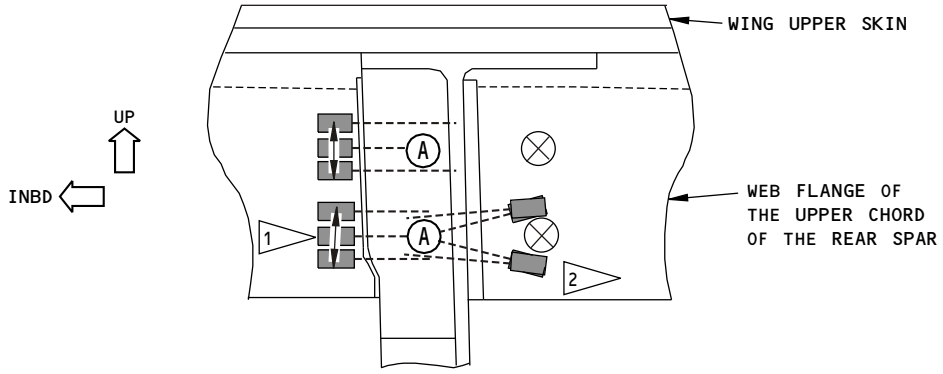

RIB 10
(OTHER LOCATIONS ARE ALMOST THE SAME)

C

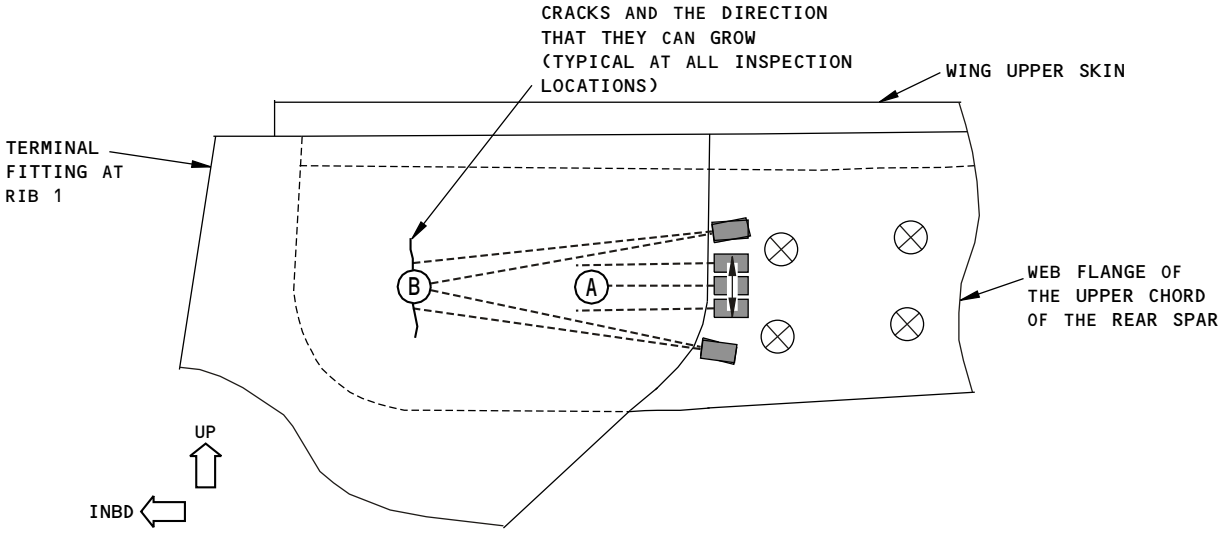

INSPECTION DETAILS FOR THE WEB FLANGES OF THE
UPPER CHORD OF THE REAR SPAR

D

NOTES:

- EXAMINE THE WEB FLANGE OF THE UPPER CHORD OF THE REAR SPAR AT FASTENER LOCATIONS HIDDEN BY VERTICAL STIFFENERS, RIB POSTS, OR OTHER FITTINGS FROM RIB 1 TO RIB 13

(A) (B) EXAMPLE OF THE FASTENER LOCATIONS TO EXAMINE (RIBS 1 TO 13; RIGHT AND LEFT WINGS)

(A) USE THE INSTRUMENT CALIBRATION FOR CODE "A" FASTENERS TO EXAMINE THESE FASTENER LOCATIONS.

(B) USE THE INSTRUMENT CALIBRATION FOR CODE "B" FASTENERS TO EXAMINE THESE FASTENER LOCATIONS.

1 DO A LATERAL SCAN AT ALL FASTENER LOCATIONS WHERE THERE IS SUFFICIENT SPACE TO DO THIS.

2 AT LOCATIONS WHERE A LATERAL SCAN IS NOT POSSIBLE, POSITION THE TRANSDUCER SO THAT THE SOUND BEAM IS AS NEAR TO PERPENDICULAR TO THE CRACK DIRECTION AS POSSIBLE. THEN EXAMINE THE FASTENER LOCATION AS SHOWN.

2175110 S0000478157_V1

Inspection Areas
Figure 1 (Sheet 2 of 3)

BOEING PROPRIETARY - Copyright © Unpublished Work - See title page for details

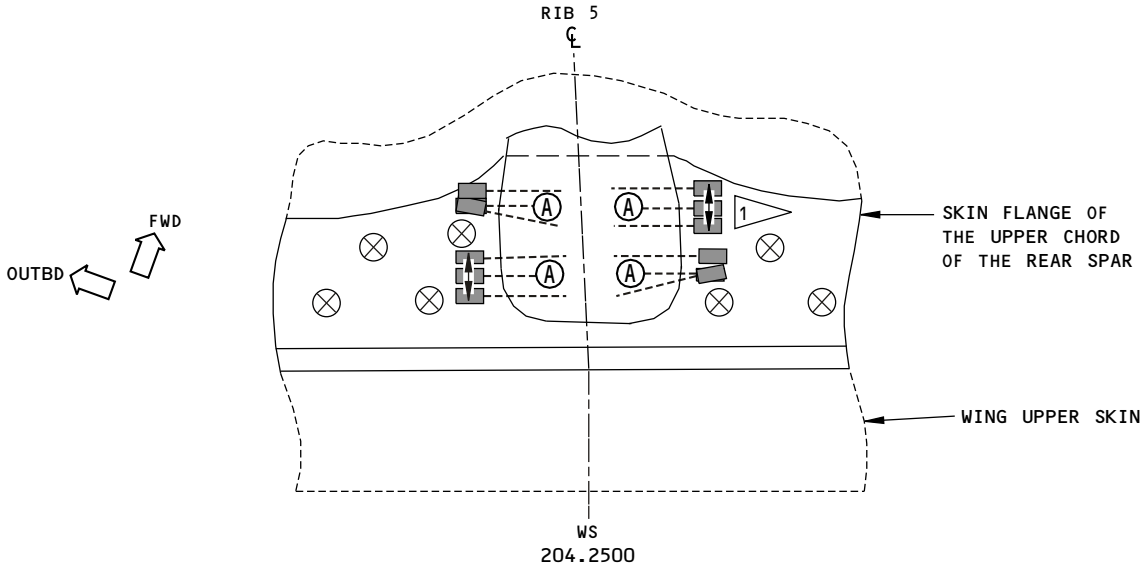

RIB 5 INSPECTION AREA IS SHOWN
(THE OTHER AREAS ARE ALMOST THE SAME)

E

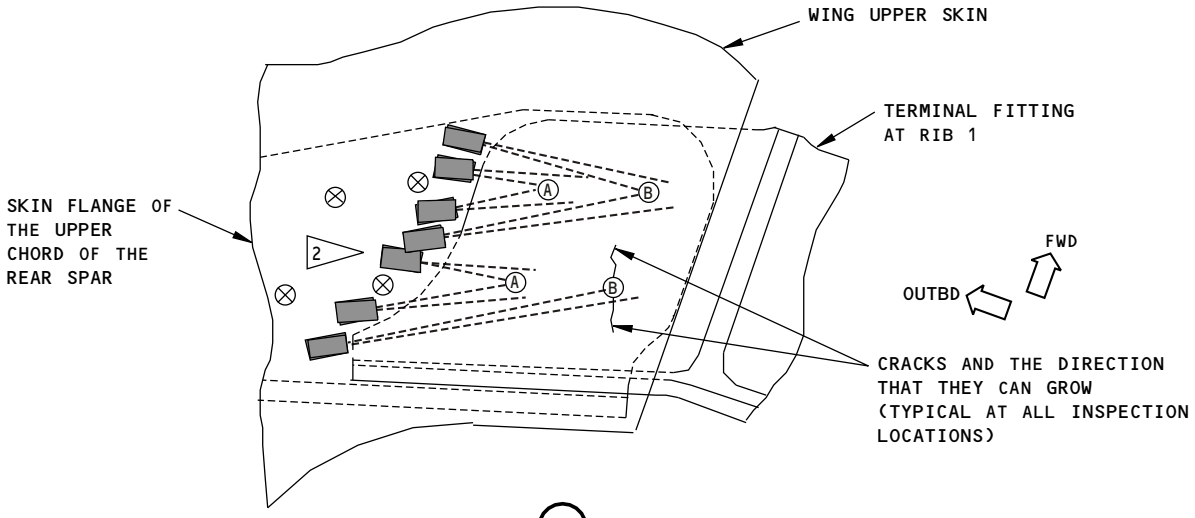

F

NOTES:

- EXAMINE THE SKIN FLANGE OF THE UPPER CHORD OF THE REAR SPAR AT FASTENER LOCATIONS HIDDEN BY VERTICAL STIFFENERS, RIB POSTS, OR OTHER FITTINGS FROM RIB 1 TO RIB 13.
- THE TRANSDUCER LOCATIONS SHOWN ABOVE ARE APPROXIMATE AND CAN BE DIFFERENT FROM WHAT IS SHOWN.

INSPECTION DETAILS FOR THE SKIN FLANGES OF THE UPPER CHORD OF THE REAR SPAR

2175500 S0000478158_V1

Inspection Areas
Figure 1 (Sheet 3 of 3)

BOEING PROPRIETARY - Copyright © Unpublished Work - See title page for details

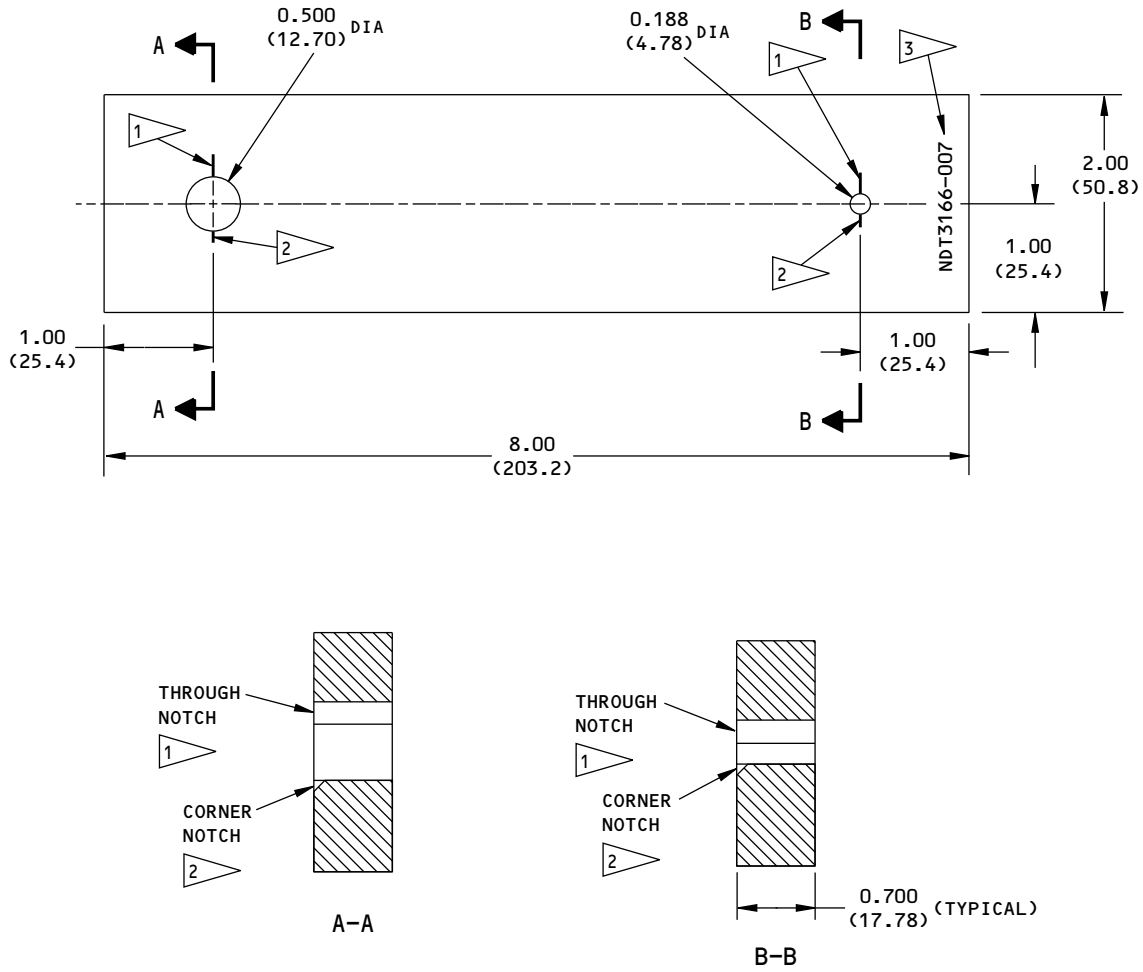

NOTES:

- ALL DIMENSIONS ARE IN INCHES (MILLIMETERS ARE IN PARENTHESES)
- TOLERANCE (UNLESS SPECIFIED DIFFERENTLY):

INCHES	MILLIMETERS	ANGULAR
X.XXX = ±0.005	X.XX = ±0.10	±1°
X.XX = ±0.025	X.X = ±0.5	
X.X = ±0.050	X = ±1	

- MATERIAL: AIRPLANE QUALITY ALUMINUM SUCH AS 2024, 7075-T6
- SURFACE ROUGHNESS: 125 Ra OR BETTER

1. EDM THROUGH NOTCH: 0.200 (5.08) X 0.007 (0.18) WIDE ±0.003 (0.08)
2. EDM CORNER NOTCH: 0.100 (2.54) X 0.100 (2.54) X 0.007 (0.18) WIDE ±0.003 (0.08)
3. ETCH OR STAMP THE REFERENCE STANDARD NUMBER, NDT3166-007, AT APPROXIMATELY THIS LOCATION.

2175501 S0000478159_V1

Reference Standard NDT3166-007
Figure 2

BOEING PROPRIETARY - Copyright © Unpublished Work - See title page for details

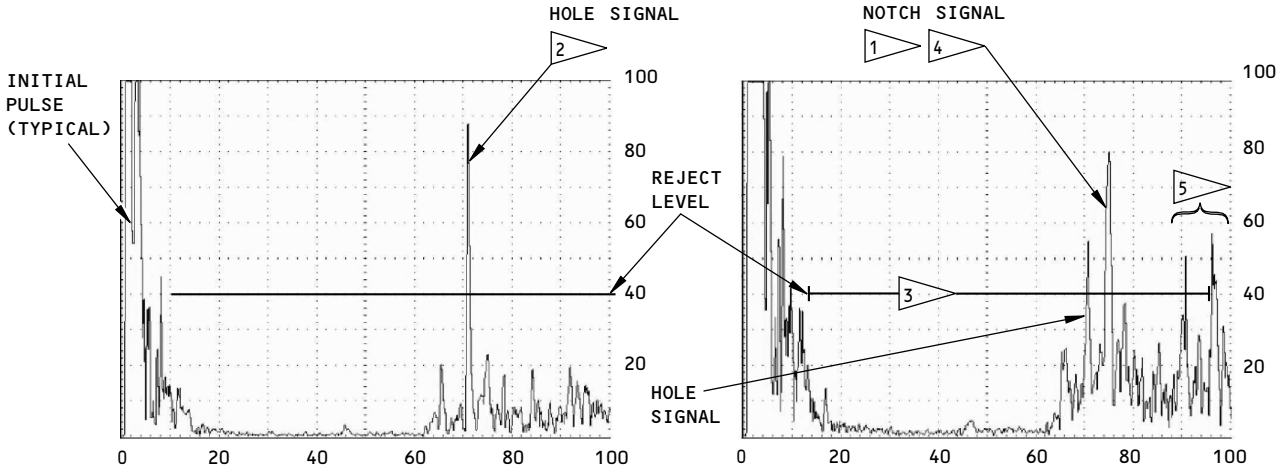

SIGNAL FROM THE HOLE WITH THE TRANSDUCER AT POSITION TP1
DETAIL I

SIGNAL FROM THE NOTCH WITH THE TRANSDUCER AT POSITION TP2
DETAIL II

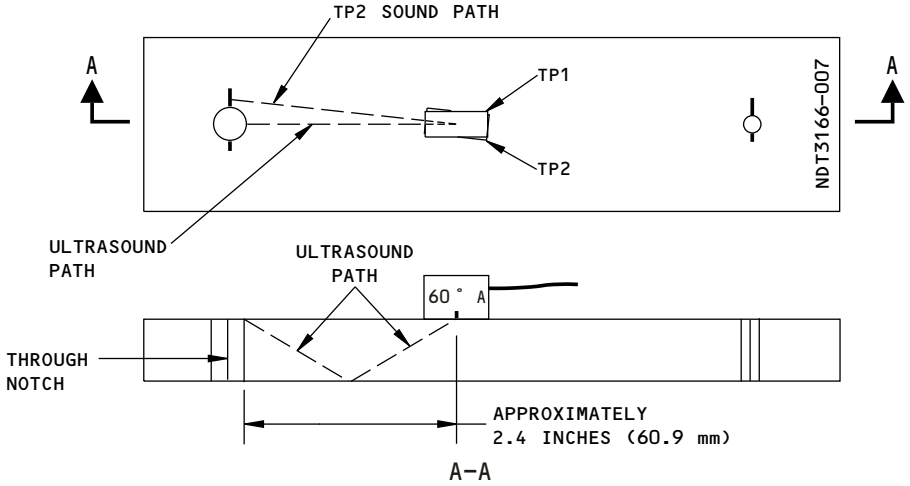

NOTES:

- TP = TRANSDUCER POSITION
- USE THE THROUGH NOTCH FOR THIS CALIBRATION.

1 SEE HOW AND WHERE THE NOTCH SIGNAL OCCURS ON THE SCREEN IN RELATION TO THE HOLE SIGNAL.

2 BECAUSE THE THICKNESS OF THE UPPER CHORD CHANGES AT DIFFERENT LOCATIONS IN THE INSPECTION AREAS, THE FSW LOCATION OF THE FASTENER HOLE SIGNALS WILL ALSO BE DIFFERENT.

3 LOCATION WHERE FASTENER HOLE AND CRACK SIGNALS CAN OCCUR. SIGNALS THAT ARE 40% OR MORE OF FSH THAT OCCUR TO THE RIGHT OF THE HOLE SIGNAL ON THE SCREEN ARE SIGNS OF A CRACK.

4 THE LOCATION WHERE A CRACK SIGNAL OCCURS IN RELATION TO THE HOLE SIGNAL WILL BE DIFFERENT FOR DIFFERENT FASTENER DIAMETERS. AS THE FASTENER DIAMETER DECREASES, THE DISTANCE BETWEEN THE HOLE AND THE NOTCH SIGNAL WILL ALSO DECREASE. YOU CAN SEE THIS OCCUR IF YOU EXAMINE THE SMALL HOLE IN THE REFERENCE STANDARD.

5 THESE SIGNALS ARE CAUSED BY SOUND REFLECTIONS IN THE REFERENCE STANDARD AND WILL NOT OCCUR DURING THE INSPECTION.

2175505 S0000478160_V1

Instrument Calibration for Type "A" Fastener Locations
Figure 3

BOEING PROPRIETARY - Copyright © Unpublished Work - See title page for details

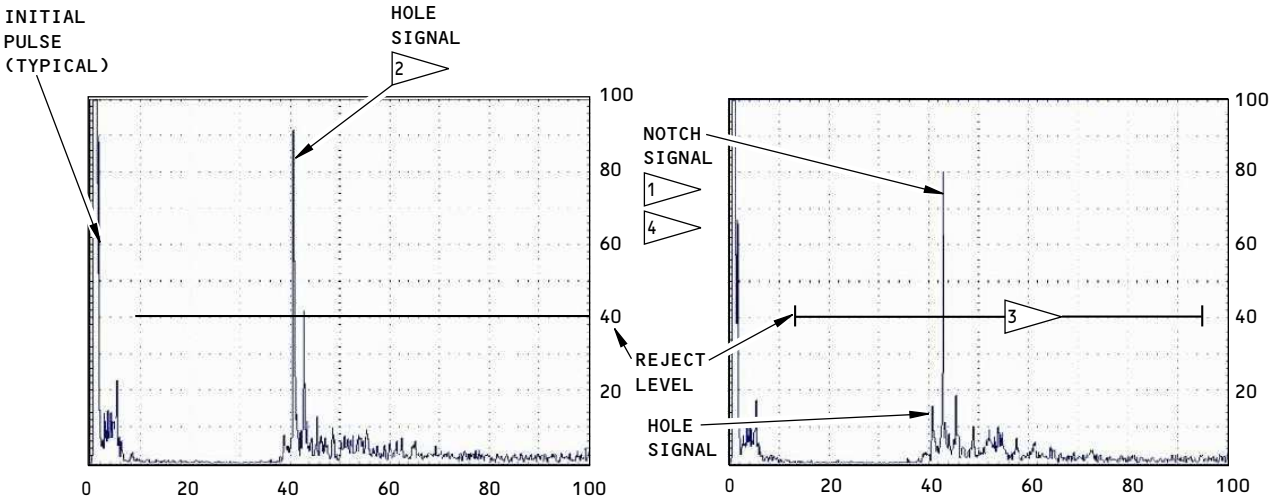

SIGNAL FROM THE HOLE WITH THE TRANSDUCER AT POSITION TP1
DETAIL I

SIGNAL FROM THE THROUGH NOTCH WITH THE TRANSDUCER AT POSITION TP2
DETAIL II

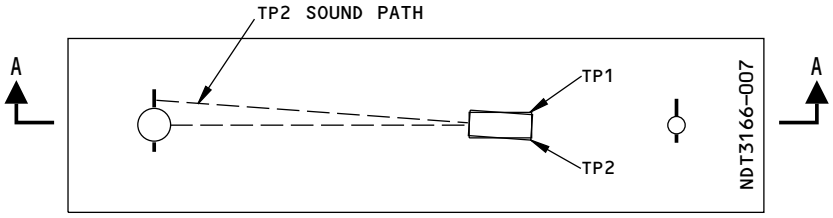

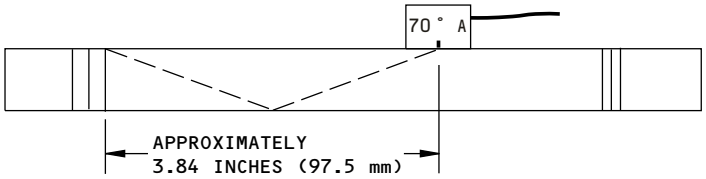

A-A

NOTES:

- TP = TRANSDUCER POSITION
- USE THE THROUGH NOTCH FOR THIS CALIBRATION.

1 SEE HOW AND WHERE THE NOTCH SIGNAL OCCURS ON THE SCREEN IN RELATION TO THE HOLE SIGNAL.

2 BECAUSE THE THICKNESS OF THE UPPER CHORD CHANGES AT DIFFERENT LOCATIONS IN THE INSPECTION AREAS, THE FSW LOCATION OF THE FASTENER HOLE SIGNALS WILL ALSO BE DIFFERENT.

3 LOCATION WHERE THE FASTENER HOLE AND CRACK SIGNALS CAN OCCUR.

4 THE LOCATION WHERE A CRACK SIGNAL OCCURS IN RELATION TO THE HOLE SIGNAL WILL BE DIFFERENT FOR DIFFERENT DIAMETER FASTENERS. AS THE FASTENER DIAMETER DECREASES, THE DISTANCE BETWEEN THE HOLE AND THE NOTCH SIGNALS WILL DECREASE. YOU CAN SEE THIS OCCUR IF YOU EXAMINE THE SMALL HOLE IN THE REFERENCE STANDARD.

2175506 S0000478161_V2

Instrument Calibration for Type "B" Fastener Locations
Figure 4

BOEING PROPRIETARY - Copyright © Unpublished Work - See title page for details

PART 4 - ULTRASONIC

OUTER WING - REAR SPAR WEB AT THE UPPER AND LOWER CHORDS

1. Purpose

A. Use this procedure to help examine the rear spar web of the outer wings for cracks. Do this inspection at all locations where the web is hidden by other structure and thus prevents a surface high frequency eddy current inspection (HFEC) of the upper and lower edges of the web. The areas to examine are at the fasteners that are nearest the edge of the web at the upper and lower chords. See Figure 1 for the inspection areas.

B. 737 Maintenance Planning Document (MPD) Damage Tolerance Record (DTR) Check Form Reference:

(1) Item: 57-20-24

(2) Item: 57-20-24-2

(3) Item: 57-20-25

(4) Item: 57-20-26

2. Equipment

A. General

(1) All ultrasonic equipment that can be calibrated as specified in Paragraph 4. can be used to do this inspection.

(2) Refer to Part 1, 51-01-00, for data about the equipment manufacturers.

B. Instrument

(1) Use an ultrasonic instrument that:

(a) Operates in the pulse-echo mode.

(b) Operates in a frequency range of 4 to 6 MHz.

NOTE: Broadband instruments can be used if they can be calibrated as specified in this procedure.

(2) The instrument that follows was used to help prepare this procedure.

(a) USM Go; GE

C. Transducer - Use a 5 MHz transducer that can put a 60 degree shear wave into aluminum and has a maximum length of 0.75 inch (19.1 mm) and a maximum width of 0.38 inch (9.5 mm). A top-mounted connector is recommended. The transducers that follow were used to help prepare this procedure.

(1) SUSM 560AT, 5 MHz; Olympus

(2) 57A-3065, 5 MHz; Olympus

D. Reference Standard - Use reference standard NDT3166-003. See Figure 2 for data about this reference standard.

E. Couplant

(1) Use an ultrasonic couplant that will not cause corrosion or other damage to the airplane.

3. Prepare for the Inspection

A. Remove sealant as necessary for transducer access to the inspection area.

BOEING PROPRIETARY - Copyright © Unpublished Work - See title page for details

B. Loosen or remove other structure as necessary to get access to the inspection areas.

C. Fully clean the inspection surface. If there is loose paint or paint chips, smooth the area as necessary by an approved procedure that will not damage the airplane.

4. Instrument Calibration

NOTE: Because access to put the transducer near the inspection area is not easy, this calibration uses the eighth leg of the sound path (four full skips) for the instrument calibration.

A. Set the instrument frequency in the 4 to 6 MHz range.

B. Put couplant on the reference standard from the large diameter hole to transducer position 1 (TP1) and TP2 as shown in Figure 3.

C. Put the transducer at TP1 and move it as necessary to get a maximum signal from the hole in leg one of the sound path (one-half skip). The approximate surface distance between the transducer and the hole for leg one of the sound path is 0.5 inch (13 mm). This distance can be different by a small quantity for transducers that are not exactly 60 degrees.

D. Slowly move the transducer from TP1 to TP2. While you do this, monitor the signals that occur from the top and bottom edges of the hole. Stop when you get the eighth signal from the hole. This is leg eight of the sound path and occurs from the upper edge of the hole. The approximate surface distance between TP2 and the near edge of the hole is given in Figure 3. This distance can be different for transducers that are not exactly 60 degrees.

NOTE: (1) While the transducer is moved farther from the hole, other signals will occur on the screen along with the maximum signal from the edge of the hole. These signals are caused by sound beam spread and occur when the outer edge of the sound beam reflects off the opposite edge of the hole than where the center of the sound beam does. Ignore these other signals and count only the maximum signals.

NOTE: (2) You can try to dampen the signal from leg eight of the sound path to make sure it is the correct signal. To do this, put a small quantity of couplant on your finger and tap the top edge of the hole that is nearest the transducer. The signal will decrease in FSH when your finger touches the top edge of the hole and increase again when your finger does not touch the top edge. If the signal does not dampen, then it is not the maximum signal for leg eight of the sound path.

E. Adjust the instrument delay and range controls so that the initial pulse signal is set at 0 percent of full screen width (FSW) and the maximum signal from the hole in leg eight of the sound path is set at 70 percent of FSW as shown in Detail I in Figure 3.

F. Slowly turn the transducer in the direction of the through notch (the TP3 location). See that the signal from the notch comes into view to the right of the signal from the hole and increases in full screen height (FSH) as the signal from the hole decreases in FSH. This signal will occur at approximately 75 percent of FSW. Refer to Detail II in Figure 3.

G. With the transducer at TP3, adjust the gain to set the maximum signal from the through notch to 80 percent of FSH as shown in Detail II in Figure 3.

H. Add 6 dB. Make a record of the instrument gain that is used.

BOEING PROPRIETARY - Copyright © Unpublished Work - See title page for details

5. **Inspection Procedure**

NOTE: (1) This inspection looks for cracks that are fully through the web. Thus, you can use the fastener hole signal from the upper or lower surfaces of the hole to do this inspection. A maximum signal from the hole is not necessary to do this inspection. You can examine each fastener location from all legs of the sound path, from leg one thru leg eight.

NOTE: (2) The web thickness changes at different locations in the inspection area and can be different for different airplanes. The reference standard thickness is the usual thickness for all inspection areas, so the signals from inspection areas that are thicker than the reference standard can occur at more than 70% of FSW.

A. Identify the inspection areas shown in Figure 1 and identify a location to start.

B. Make sure the instrument is calibrated as specified in Paragraph 4.

C. Put couplant on the web in the area to be examined.

D. Put the transducer on the web, adjacent to the fastener hole location to be examined, and move the transducer as necessary to get a signal from the fastener hole. This signal can occur between 15 and 95% of FSW. The position where the fastener hole signal occurs on the screen display is a function of the distance between the transducer and the applicable fastener, and the thickness of the web at that location.

NOTE: (1) If you cannot easily see the signal from the fastener hole, add gain as necessary to set the signal at 30 percent of FSH. If you add gain, make sure that you set the instrument gain back to the quantity recorded in Paragraph 4.H. before you examine subsequent fastener holes.

NOTE: (2) The web is thicker than the reference standard by approximately 0.10 inch (2.5 mm) from the side-of-body rib to WSTA 267. Thus, the FSW location of the fastener hole signals can be more than 70% of FSW. Also, if the only acceptable location to put the transducer is too far from the fastener hole, then the signal from the fastener hole can be at more than 100% of FSW. If this occurs, then calibrate the instrument again, but put the signal from leg eight of the sound beam at 50% of FSW, not 70% of FSW as given in Paragraph 4.E. If the signal is still more than 100% of FSW, then calibrate again, but put the maximum signal from leg eight of the sound path at less than 50% of FSW.

E. Slowly turn the transducer as necessary to point the sound beam to the side of the fastener hole that is nearest the transducer. Carefully monitor the signal from the hole as you do this. If there is a crack, the signal from the crack will come into view to the right of the hole signal and increase in FSH as the signal from the hole decreases in FSH. Turn the transducer until the hole signal decreases to 0 percent of FSH. If a crack signal occurs, then move the transducer as necessary to get a maximum crack signal.

NOTE: The location where a crack signal occurs in relation to the hole signal will be different for different diameter fasteners. As the fastener diameter decreases, the distance between the hole and the possible crack signals will also decrease. You can see this occur if you examine the small hole in the reference standard.

F. Put the transducer at the best location on the web to examine the opposite side of this same fastener hole. Get a maximum signal from the hole and slowly turn the transducer as necessary to point it to the side of the fastener hole that is nearest the transducer. Carefully monitor the signal from the hole as you do this. Turn the transducer until the hole signal decreases to 0 percent of FSH. If a crack signal occurs, then move the transducer as necessary to get a maximum signal from the crack.

BOEING PROPRIETARY - Copyright © Unpublished Work - See title page for details

G. At all fastener locations where a signal occurs after the hole signal that is less than 40% of FSH, examine the same fastener hole again, but examine it from different directions.

NOTE: Fasteners in the transducer inspection areas can prevent transducer access to the best transducer positions to examine the applicable fastener locations. At each fastener location, try to keep the transducer as perpendicular to the possible crack location as you can.

H. Do Paragraph 5.C. thru Paragraph 5.G. again to examine all inspection areas identified in Figure 1 on the left and right wings.

NOTE: Do a check of the instrument calibration every 30 minutes and after the inspection is completed. If the sensitivity has changed, calibrate the instrument again and do the inspection at all areas examined since the last calibration check.

I. Go to Paragraph 6. for instructions to help make an analysis of all possible crack signals that are 40 percent or more of FSH. Possible crack signals are those signals that occur to the right of the hole signal and are almost the same as the notch signals that occurred on the reference standard during instrument calibration.

6. Inspection Results

A. A signal that is 40 percent or more of FSH that occurs to the right of the hole signal and increases in FSH as the signal from the hole starts to decrease in FSH (or immediately after it decreases to zero percent of FSH) is a possible crack signal. It is necessary to do more analysis of these signals. Go to Paragraph 6.B. and continue to make an analysis of these possible crack signals.

NOTE: It is very possible that cracks smaller than the reference notch will have a signal that is less than 40 percent of FSH. Thus, make a careful record of all possible cracks that are less than 40 percent of FSH to refer to during the subsequent inspection interval.

B. Identify if the crack signal is caused by couplant on the part surface as follows:

(1) Get a maximum signal from the possible crack and keep the transducer at that location.

(2) Remove all couplant that is between the front of the transducer and the inspection area.

(3) If the signal goes away, no more analysis is necessary. If the signal continues to stay, go to Paragraph 6.C. and continue to make an analysis of the possible crack signal.

C. Compare the possible crack signal to the signal that you get from the notch in the reference standard. Because the reference standard thickness will be different from the thickness of the web, you can only compare how the possible crack signal occurs in relation to the hole signal.

D. Remove the fastener and do an open hole eddy current inspection as specified in Part 6, 51-00-00, Procedure 16 to make sure there is a crack.

BOEING PROPRIETARY - Copyright © Unpublished Work - See title page for details

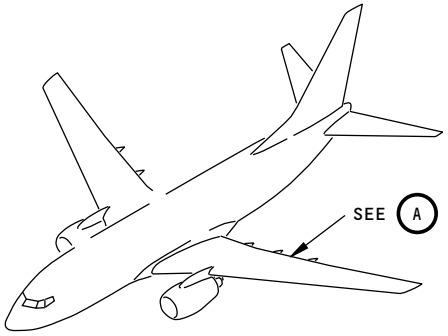

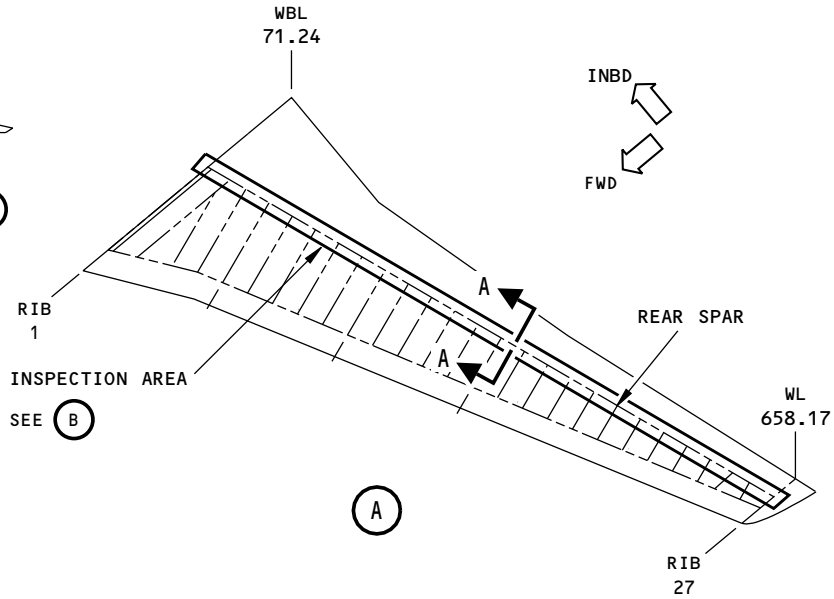

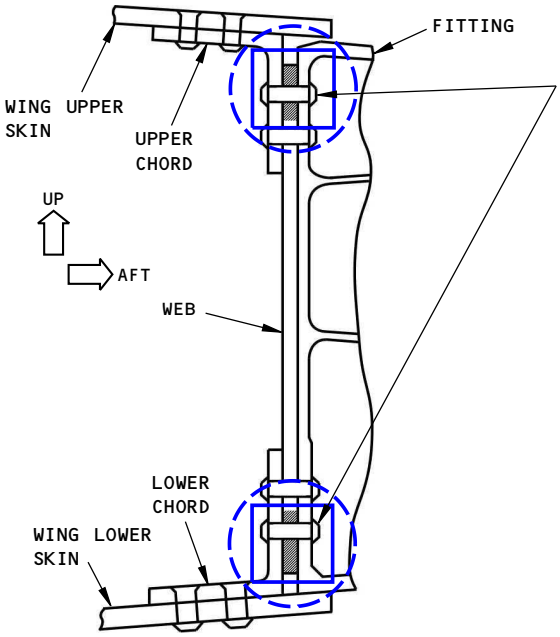

REAR SPAR END VIEW
A-A

FOR DTR CHECK FORM ITEMS 57-20-24-2 AND 57-20-24/25/26: EXAMINE THE WEB FOR CRACKS AT THESE TWO FASTENER LOCATIONS. (THE FASTENER NEAREST THE EDGE OF THE WEB; THE UPPER AND LOWER FASTENER.)

FOR DTR CHECK FORM ITEM 57-20-24/25/26: EXAMINE THE WEB FOR CRACKS AT FITTINGS ATTACHED TO THE AFT SIDE OF THE REAR SPAR. SEE VIEW B. THE FITTINGS WHERE THIS INSPECTION IS NECESSARY ARE:

-- FLAP SUPPORT FITTINGS
-- FORWARD TRUNNION FITTING
-- LOWER STABILIZER ATTACH FITTINGS
-- MAIN LANDING GEAR (MLG) OUTBOARD SUPPORT FITTINGS
-- TRAILING EDGE DEFLECTION CONTROL RIB
-- SPOILER #1 HINGE/ACTUATOR SUPPORT FITTING
-- SPOILER #2 HINGE/ACTUATOR SUPPORT FITTING

FOR DTR CHECK FORM ITEM 57-20-24-2: EXAMINE THE WEB FOR CRACKS AT ALL BRACKETS, STIFFENERS, AND FITTINGS THAT ARE ATTACHED TO THE AFT SIDE OF THE REAR SPAR. ONLY EXAMINE THE FITTINGS THAT ARE NOT INCLUDED IN DTR CHECK FORM ITEM 57-20-24/25/26. DO THIS INSPECTION ONLY AT FASTENER LOCATIONS WHERE THE WEB IS HIDDEN FROM VIEW AND A HFEC INSPECTION OF THE WEB IS NOT POSSIBLE.

NOTES:

- THE LEFT WING IS SHOWN;
  THE RIGHT WING IS ALMOST THE SAME.

INSPECTION AREAS FOR DTR CHECK FORM ITEMS 57-20-24-2 AND 57-20-24/25/26. SEE VIEW B FOR MORE DETAILS.

2175610 S0000478462_V2

Inspection Areas
Figure 1 (Sheet 1 of 5)

BOEING PROPRIETARY - Copyright © Unpublished Work - See title page for details

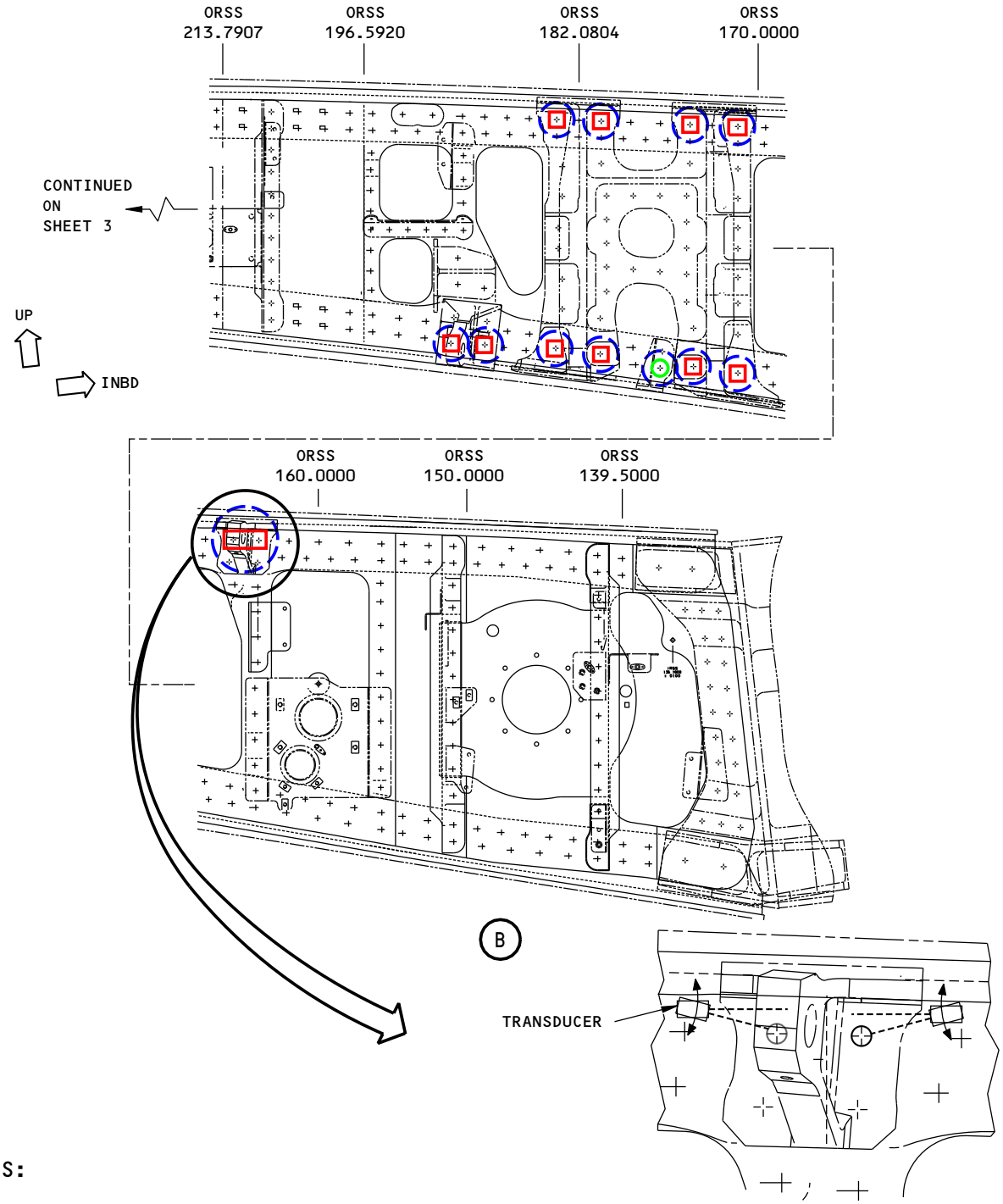

NOTES:

INSPECTION AREAS FOR DTR CHECK FORM ITEM 57-20-24-2

INSPECTION AREAS FOR DTR CHECK FORM ITEM 57-20-24/25/26

EXAMPLE OF TYPICAL INSPECTIONS OF FASTENER HOLE LOCATIONS

2175612 S0000478463_V3

Inspection Areas
Figure 1 (Sheet 2 of 5)

BOEING PROPRIETARY - Copyright © Unpublished Work - See title page for details

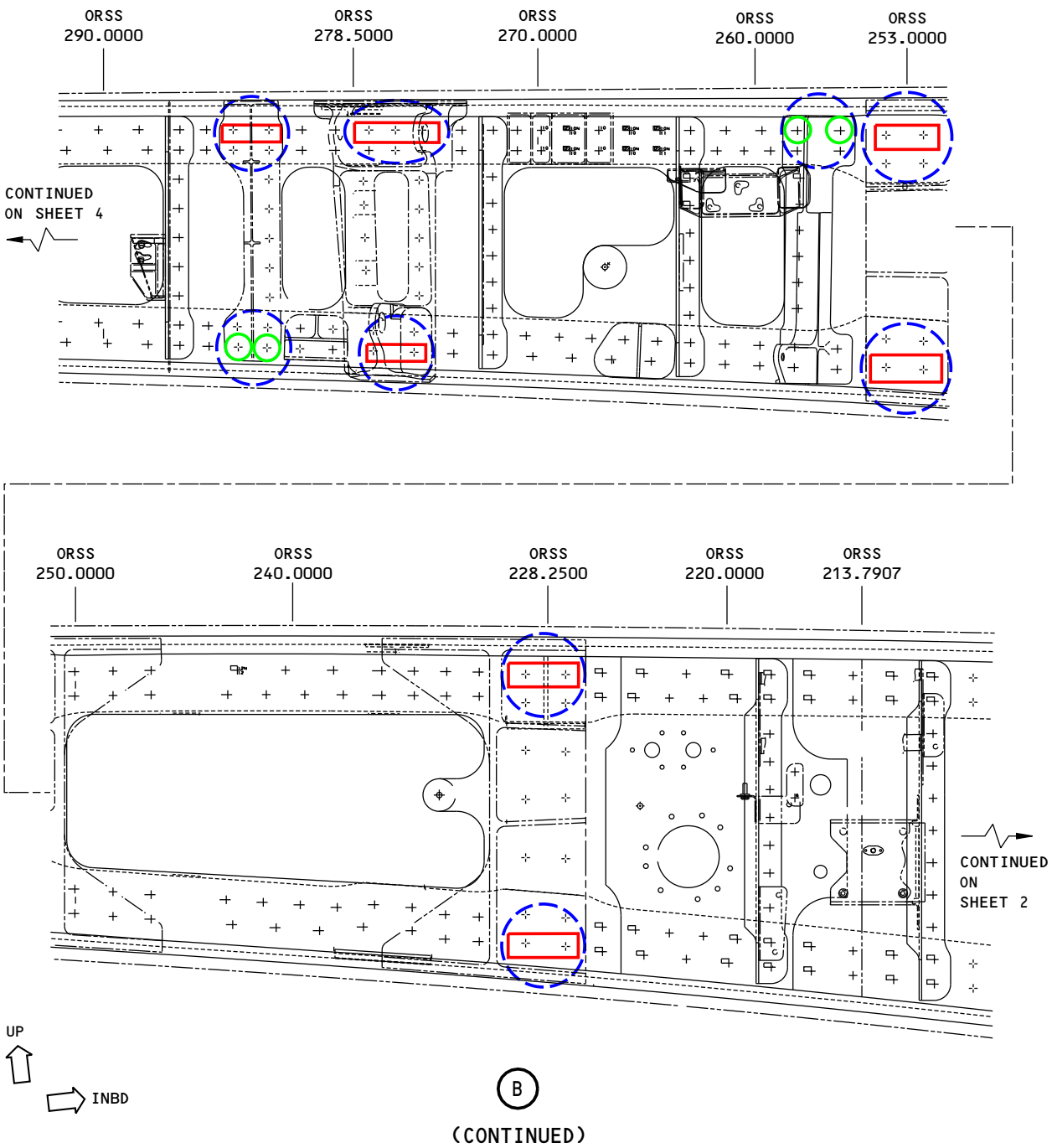

2175613 S0000478464_V3

Inspection Areas
Figure 1 (Sheet 3 of 5)

BOEING PROPRIETARY - Copyright © Unpublished Work - See title page for details

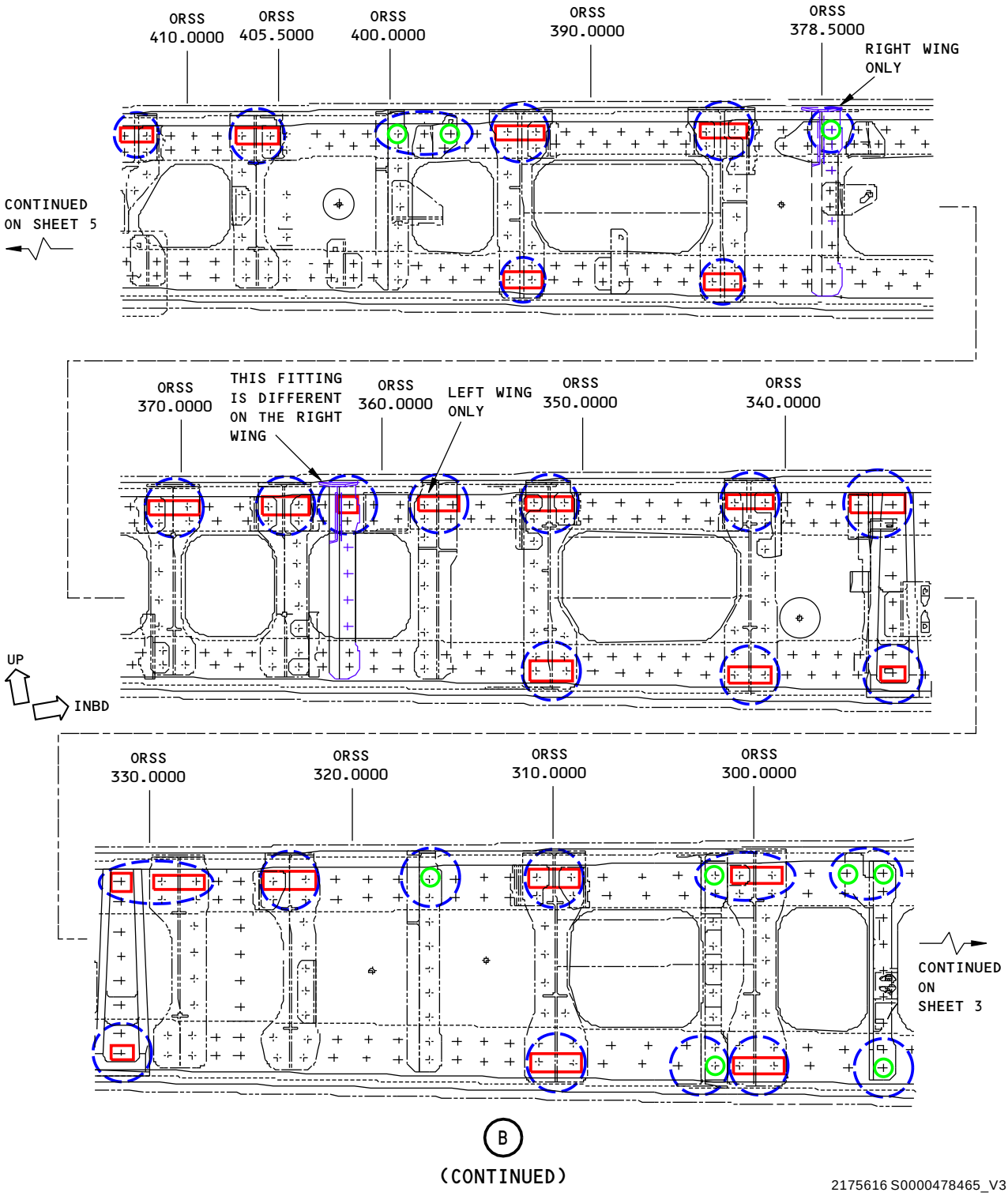

2175616 S0000478465_V3

Inspection Areas
Figure 1 (Sheet 4 of 5)

BOEING PROPRIETARY - Copyright © Unpublished Work - See title page for details

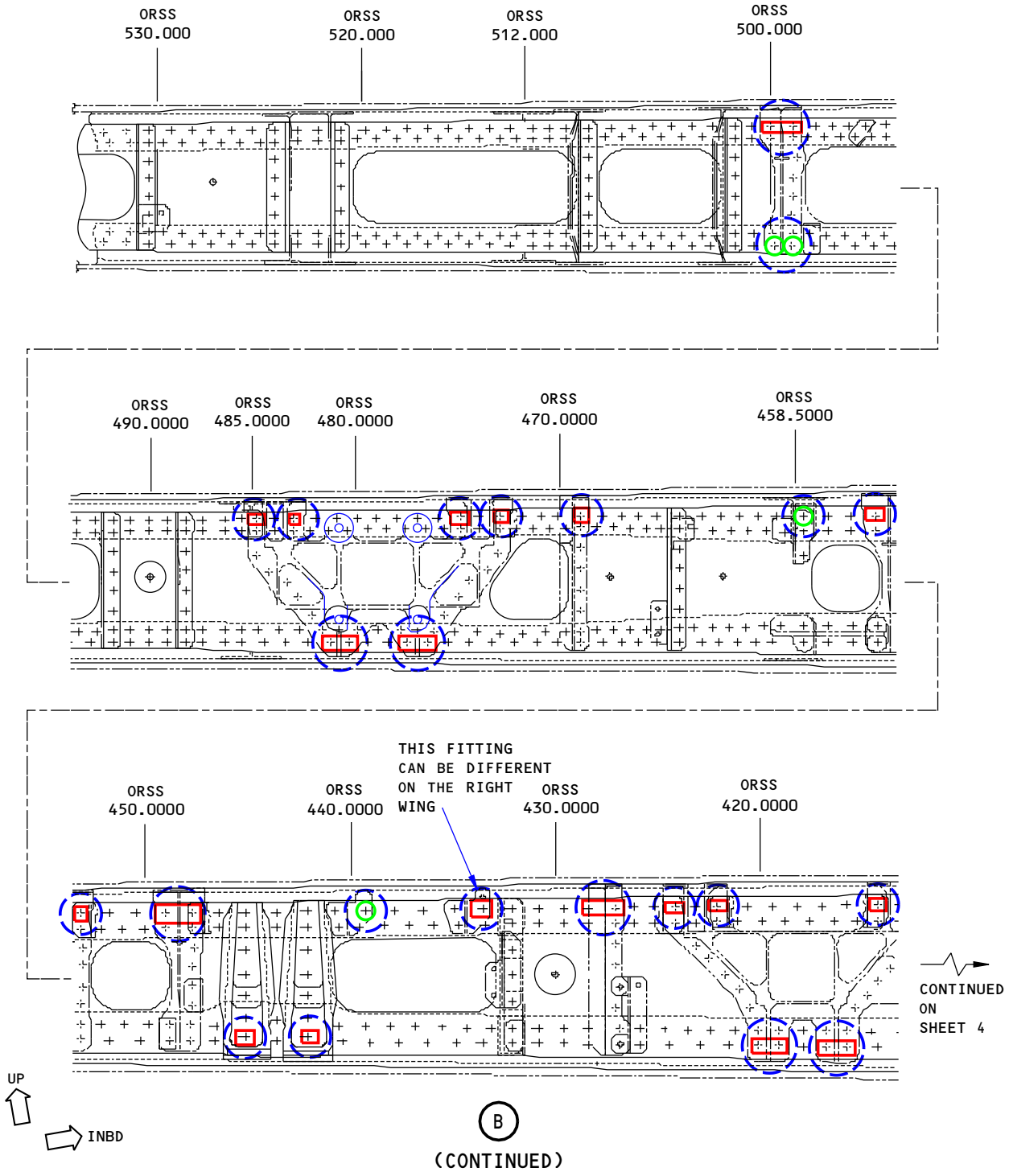

2175619 S0000478466_V3

Inspection Areas
Figure 1 (Sheet 5 of 5)

BOEING PROPRIETARY - Copyright © Unpublished Work - See title page for details

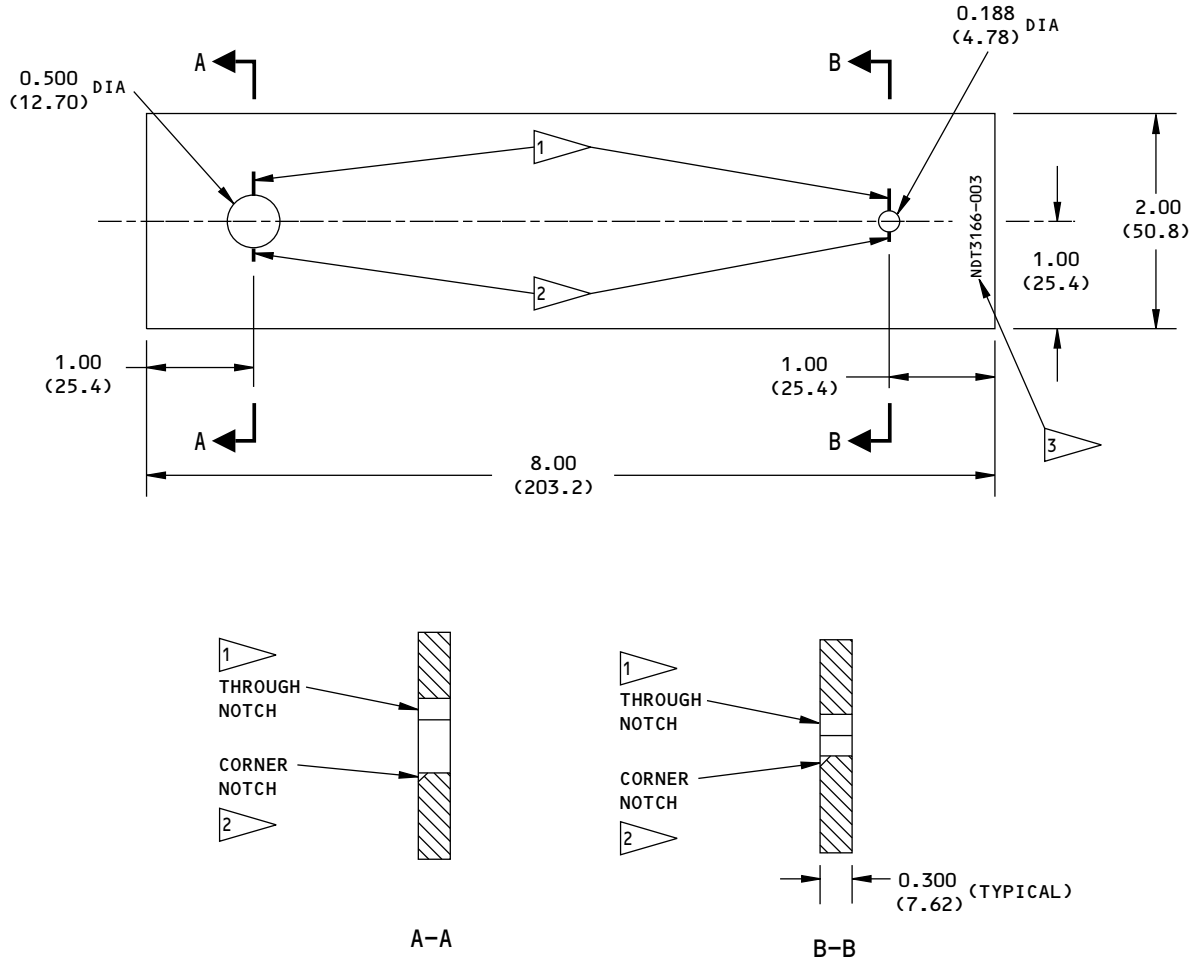

NOTES:

- ALL DIMENSIONS ARE IN INCHES (MILLIMETERS ARE IN PARENTHESES)
- TOLERANCE (UNLESS SPECIFIED DIFFERENTLY):

INCHES	MILLIMETERS	ANGULAR
X.XXX = ±0.005	X.XX = ±0.10	± 1°
X.XX = ±0.025	X.X = ±0.5	
X.X = ±0.050	X = ±1	

- MATERIAL: AIRPLANE QUALITY ALUMINUM SUCH AS 2024, 7075-T6
- SURFACE ROUGHNESS: 125 Ra OR BETTER

1 EDM THROUGH NOTCH: 0.200 (5.08) X 0.007 (0.18) WIDE ±0.003 (0.08)

2 EDM CORNER NOTCH: 0.100 (2.54) X 0.100 (2.54) X 0.007 (0.18) WIDE ±0.003 (0.08)

3 ETCH OR STAMP THE REFERENCE STANDARD NUMBER, NDT3166-003, AT APPROXIMATELY THIS LOCATION.

2175620 S0000478467_V1

Reference Standard NDT3166-003
Figure 2

BOEING PROPRIETARY - Copyright © Unpublished Work - See title page for details

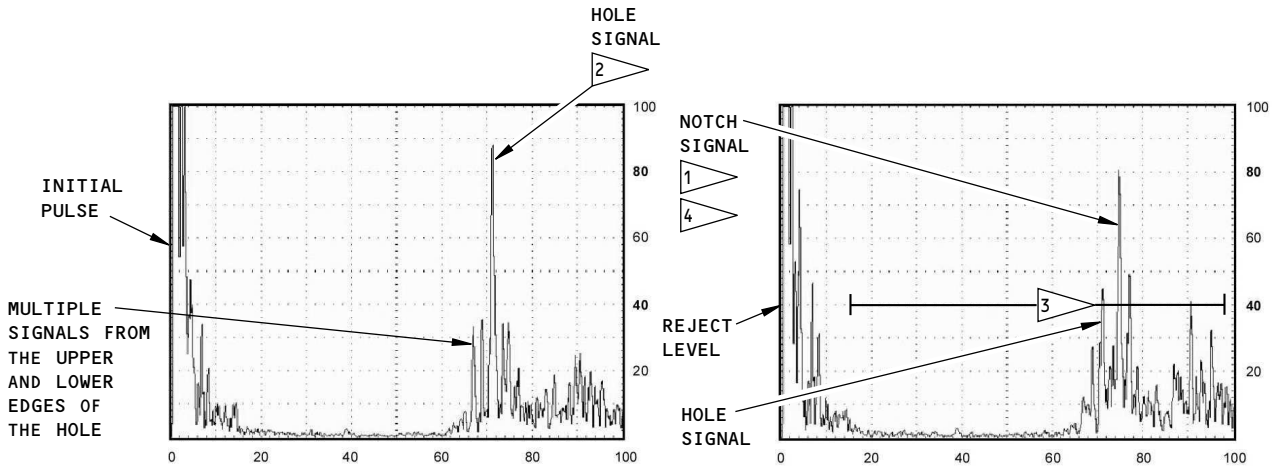

SIGNAL FROM THE HOLE WITH THE TRANSDUCER AT POSITION TP2
DETAIL I

SIGNAL FROM THE NOTCH WITH THE TRANSDUCER AT POSITION TP3
DETAIL II

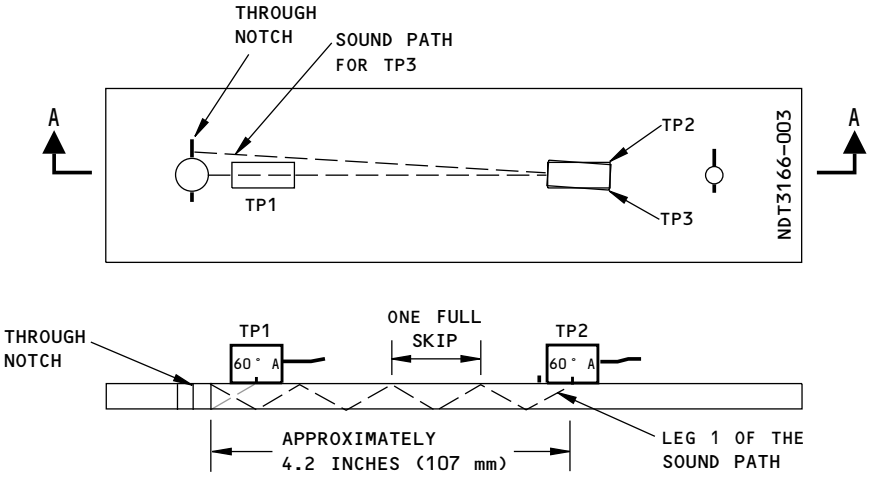

A–A

NOTES:

- TP = TRANSDUCER POSITION

1 SEE HOW AND WHERE THE NOTCH SIGNAL OCCURS ON THE SCREEN IN RELATION TO THE HOLE SIGNAL.

2 BECAUSE THE THICKNESS OF THE WEB IS DIFFERENT AT SOME INSPECTION AREAS, THE FSW LOCATION OF THE FASTENER HOLE SIGNALS WILL ALSO BE DIFFERENT.

3 LOCATION WHERE THE FASTENER HOLE AND CRACK SIGNALS CAN OCCUR. SIGNALS THAT ARE 40% OR MORE OF FSH THAT OCCUR TO THE RIGHT OF THE HOLE SIGNAL ARE POSSIBLE CRACK SIGNALS AND MORE ANALYSIS IS NECESSARY.

4 THE LOCATION WHERE A CRACK SIGNAL OCCURS IN RELATION TO THE HOLE SIGNAL WILL BE DIFFERENT FOR DIFFERENT DIAMETER FASTENERS. AS THE FASTENER DIAMETER DECREASES, THE DISTANCE BETWEEN THE HOLE AND THE NOTCH SIGNAL WILL DECREASE. YOU CAN SEE THIS OCCUR IF YOU EXAMINE THE SMALL HOLE IN THE REFERENCE STANDARD.

2175623 S0000478468_V1

Inspection Calibration
Figure 3

BOEING PROPRIETARY - Copyright © Unpublished Work - See title page for details

PART 4 - ULTRASONIC

UPPER SKIN OF THE WING CENTER SECTION - FROM THE FRONT SPAR TO THE REAR SPAR AT BL 0, BL 25 AND BL 45

1. Purpose

A. Use this procedure to help find cracks in the upper skin of the wing center section. The upper skin is examined for cracks from the front spar to the rear spar of the wing center section at the floor beams and shear ties at BL 0, BL 25 and BL 45. See Figure 1 for the inspection area.

B. 737 Maintenance Planning Document (MPD) Damage Tolerance Record (DTR) Check Form Reference:

(1) Item: 57-10-06

2. Equipment

A. General

(1) Use equipment that can be calibrated on the reference standard as specified in Paragraph 4.

(2) Refer to Part 1, 51-01-00, for data about the equipment manufacturers.

B. Instruments

(1) The pulse-echo, ultrasonic instruments that follow were used to help prepare this procedure.

(a) USN 50; Krautkramer Branson

(b) USD 15; Krautkramer Branson

C. Transducer

(1) Use a transducer that:

(a) Operates at 5 MHz.

(b) Causes a 70 degree shear wave in aluminum.

(2) The transducer that follows was used to help prepare this procedure.

(a) SUSM 570AT, 5MHz, 70 Degree Aluminum; NDT Engineering Corp.

D. Reference Standard

(1) No reference standard is necessary to do this inspection.

E. Couplant

(1) Use couplant that is permitted for use with airplane structure.

3. Prepare for the Inspection

A. Identify the inspection area shown in Figure 1.

B. Remove the floor panels to access the upper skin of the wing center section.

C. Remove the vapor coating from the upper skin in the area that the transducer will touch.

D. Clean the area that the transducer will touch.

4. Instrument Calibration

A. Connect the transducer to the instrument.

B. Set the instrument frequency to 5 MHz.

BOEING PROPRIETARY - Copyright © Unpublished Work - See title page for details

C. Put couplant near a fastener on the upper skin in the general transducer position area. See Figure 1.

D. Put the transducer on the upper skin so the transmitted sound points at one of the fastener holes in the inspection area.

E. Set the initial pulse at 0% of full screen width (FSW) (see Figure 1).

F. Move the transducer to and away from the hole and monitor how the height and horizontal positions of the hole signal changes.

G. Get a maximum signal from the hole.

H. Adjust the hole signal so that it is at 60% of FSW and 80% of full screen height (FSH) or a minimum of 30% of FSH (see Figure 1).

I. Increase the instrument gain by 6 dB.

5. Inspection Procedure

A. Examine the upper skin of the 737 wing center section for cracks as follows:

(1) Find the upper skin of the wing center section. See Figure 1.

(2) Calibrate the equipment as specified in Paragraph 4.

(3) Put couplant at the general transducer positions on the upper skin of the wing center section. See Figure 1.

(4) Put the transducer on the upper skin of the wing center section. Point the transducer so sound is transmitted to one of the fastener holes in the inspection area.

(5) Move the transducer to and away from the hole and monitor how the height and horizontal positions of the hole signal changes.

(6) Get a maximum signal from the hole.

(7) Turn the transducer to do a scan for cracks on each side of the fastener hole. See Figure 1.

(8) Make an inspection from the opposite side of the fastener hole to make a complete inspection of the hole.

NOTE: Signals that occur to the right of the fastener hole signal that are approximately 65% to 90% of FSW and are more than 40% of FSH are possible crack indications.

(9) Move the transducer to a different fastener hole in the inspection area and do Paragraph 5.A.(3) thru Paragraph 5.A.(8) for all fastener holes in the inspection area.

(10) Do Paragraph 5.A.(1) thru Paragraph 5.A.(9) at all 5 floor beams to examine the upper skin of the wing center section for cracks.

6. Inspection Results

A. Look for cracks that start at a fastener hole and grow in the direction of the adjacent fastener hole on the upper skin.

B. If you get a crack indication, remove the couplant from the surface of the upper skin in front of the transducer and do the scan again. Too much couplant on the surface can cause a signal that looks to be a crack signal.

C. A signal that occurs to the right of the hole signal and is more than 40% of full screen height is a crack indication.

D. Remove the fastener at locations where crack type signals occur to do an open hole eddy current inspection as specified in Part 6, 51-00-00, Procedure 16 to make sure there is a crack.

BOEING PROPRIETARY - Copyright © Unpublished Work - See title page for details

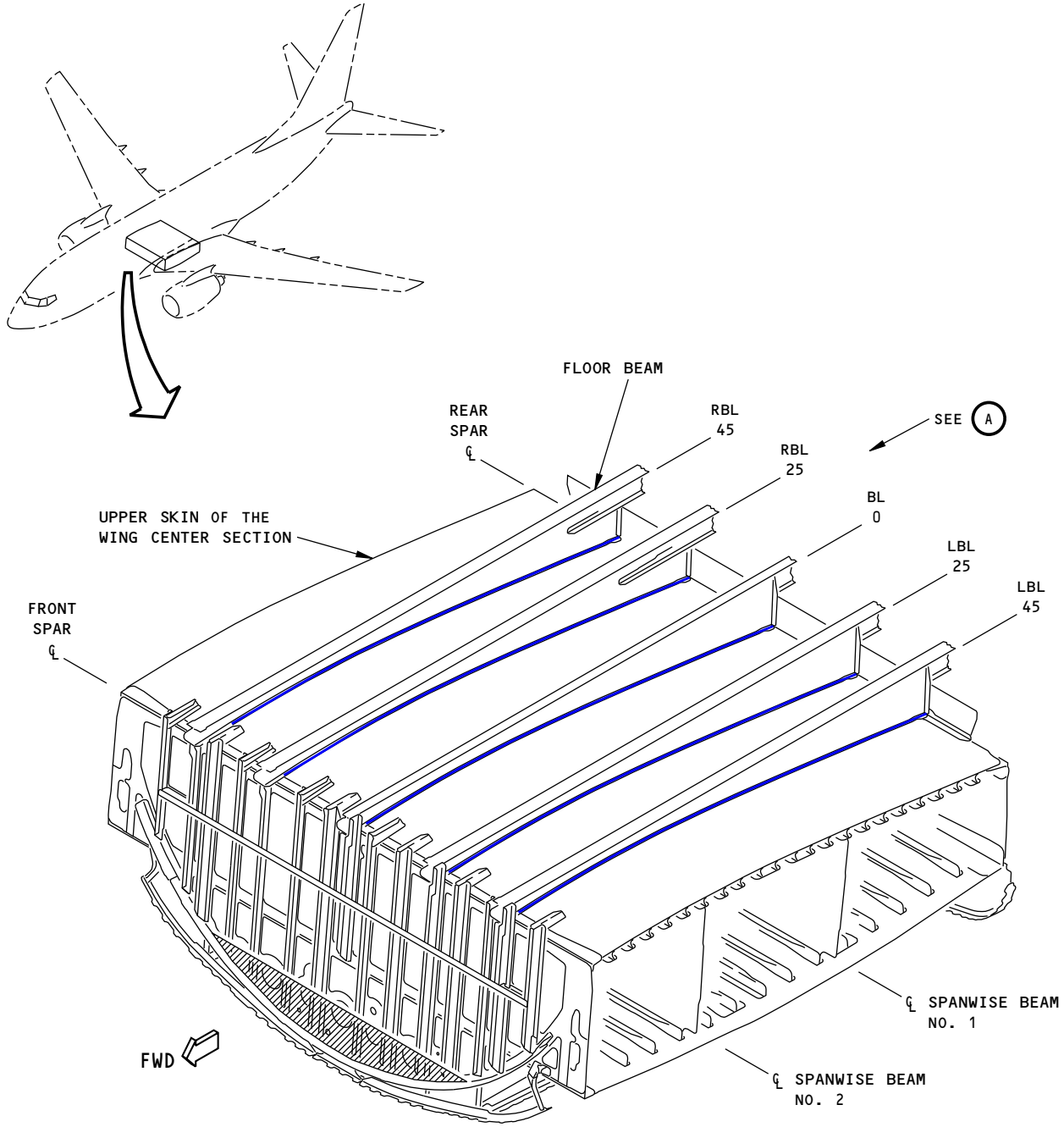

NOTES:

— INSPECTION LOCATIONS ARE AT THE UPPER SKIN OF THE WING CENTER SECTION, BELOW EACH FLOOR BEAM AT BL 0, BL 25, AND BL 45.

2175652 S0000478141_V1

Inspection Locations
Figure 1 (Sheet 1 of 3)

BOEING PROPRIETARY - Copyright © Unpublished Work - See title page for details

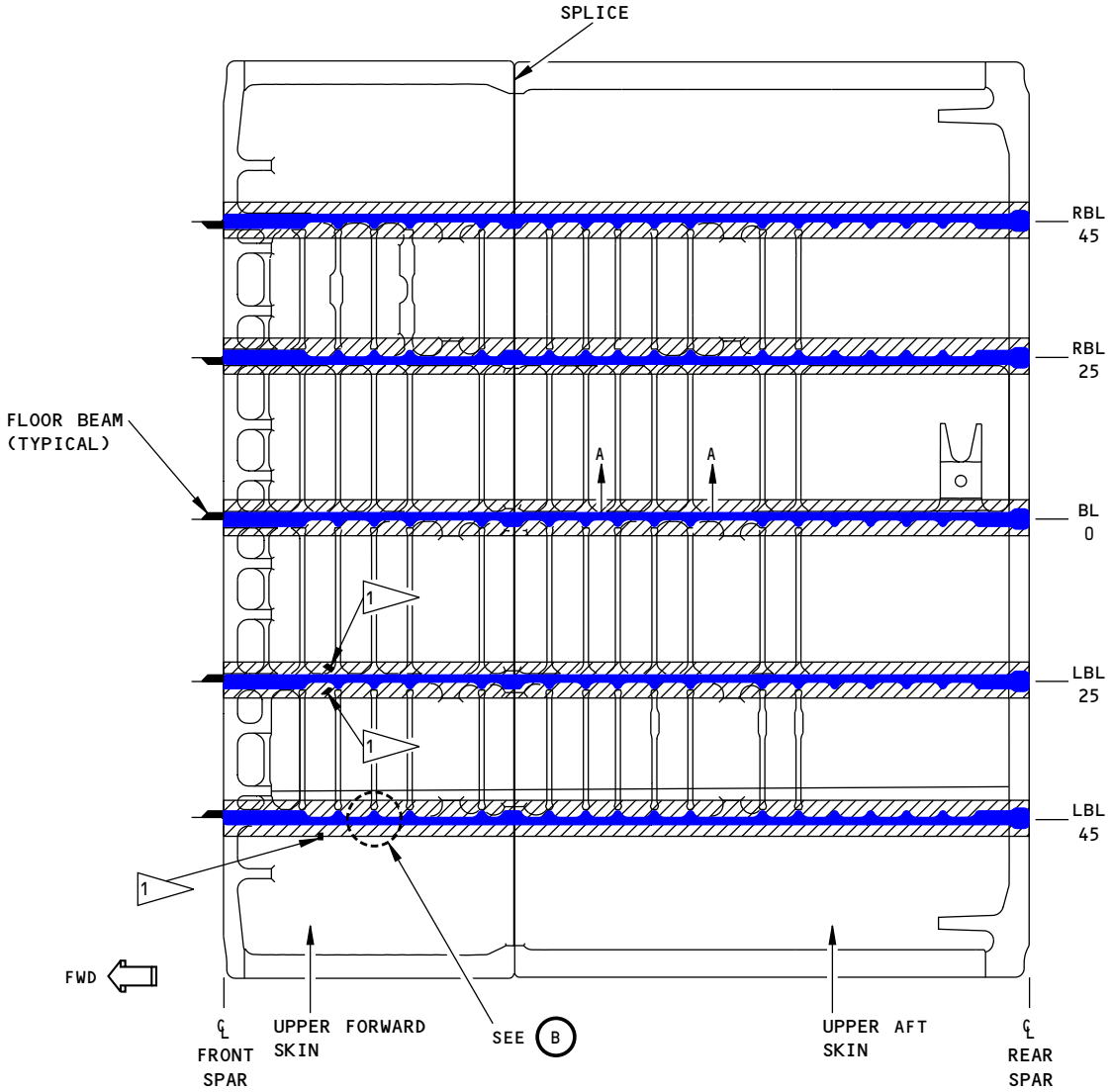

VIEW AS YOU LOOK DOWN ON
THE UPPER SKIN PANEL

A

NOTES:

TRANSDUCER CONTACT SURFACE

EXAMINE THE UPPER SKIN FOR CRACKS UNDER THE FLOOR BEAMS, FROM THE FRONT SPAR TO THE REAR SPAR.

1 TYPICAL ULTRASONIC TRANSDUCER LOCATIONS.

2175656 S0000478142_V1

Inspection Locations
Figure 1 (Sheet 2 of 3)

BOEING PROPRIETARY - Copyright © Unpublished Work - See title page for details

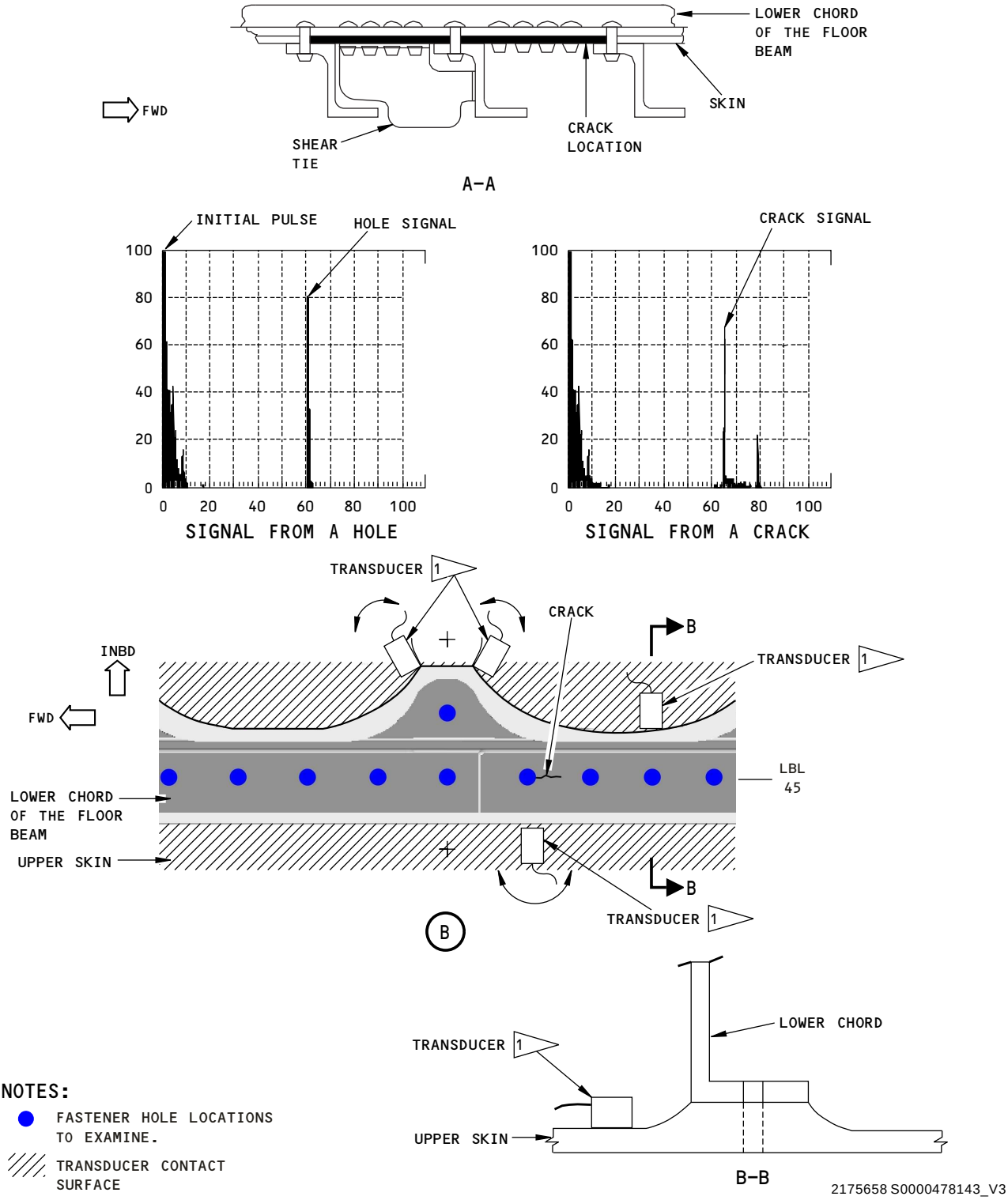

Inspection Locations
Figure 1 (Sheet 3 of 3)

BOEING PROPRIETARY - Copyright © Unpublished Work - See title page for details

WING CENTER SECTION - LOWER SKIN PANEL AT THE KEEL BEAM AND LOWER BEAMS

1. Purpose

A. Use this procedure to help examine the lower skin of the center wing section for cracks at fastener locations that connect the keel beam and lower beams to the airplane. See Figure 1 for the inspection areas.

B. 737 Maintenance Planning Document (MPD) Damage Tolerance Record (DTR) Check Form References:

(1) Item: 57-10-12

(2) Item: 57-10-15

2. Equipment

A. General

(1) All ultrasonic equipment that can be calibrated as specified in Paragraph 4. can be used to do this inspection.

(2) Refer to Part 1, 51-01-00, for data about the equipment manufacturers.

B. Instrument

(1) Use an ultrasonic instrument that:

(a) Operates in the pulse-echo mode.

(b) Operates in a frequency range of 4 to 6 MHz.

NOTE: Broadband instruments can be used if they can be calibrated as specified in this procedure.

(2) The instrument that follows was used to help prepare this procedure.

(a) USM Go; GE

C. Transducer - Use a 5 MHz transducer that can put a 60 degree shear wave into aluminum and has a maximum length of 0.75 inch (19.1 mm) and a maximum width of 0.38 inch (9.5 mm). A top-mounted connector is recommended. The transducers that follow were used to help prepare this procedure.

(1) SUSM 560AT, 5 MHz; Olympus

(a) Case dimensions: 0.55 inch (13.9 mm) long and 0.25 inch (6.4 mm) wide.

(2) 57A-3065, 5 MHz; Olympus

(a) Case dimensions: 0.70 inch (17.8 mm) long and 0.25 inch (6.4 mm) wide.

(3) MA-605T, Techna

(a) Case dimensions: 0.75 inch (19.1 mm) long and 0.35 inch (8.9 mm) wide.

(4) TEK-5557/60T, Techna

(a) Case dimensions: 0.35 inch (8.9 mm) long and 0.30 inch (7.6 mm) wide.

NOTE: Use the largest transducer you can (0.75 inch (19 mm) long and 0.38 inch (9.5 mm) wide are the maximum dimensions) at all locations where there is access. Where access is not sufficient for a large transducer, use a small transducer as the one specified in Paragraph 2.C.(4).

BOEING PROPRIETARY - Copyright © Unpublished Work - See title page for details

D. Reference Standard - Use reference standard NDT3166-007. See Figure 2 for data about this reference standard.

E. Couplant

(1) Use an ultrasonic couplant that will not cause corrosion or other damage to the airplane.

3. Prepare for the Inspection

A. Remove the underwing fairing and open the A/C bay door to get access to the inspection area.

B. Remove ducts as necessary to get access to the inspection areas.

C. Fully clean the inspection surface. If there is loose paint or paint chips, smooth the area as necessary by an approved procedure that will not damage the airplane.

4. Instrument Calibration

A. Set the instrument frequency in the 4 to 6 MHz range.

B. Put couplant on the reference standard at transducer position 1 (TP1) and TP2 as shown in Figure 3.

C. Put the transducer at TP1 and move it as necessary to get a maximum signal from the hole in leg II of the sound path. Figure 3 shows the approximate surface distance between the transducer and the hole when leg II of the sound path is used. This distance can be different by a small quantity for transducers that are not exactly 60 degrees.

D. Adjust the instrument delay and range controls so that the initial pulse signal is set at 0 percent of full screen width (FSW) and the maximum signal from the hole (in leg II) is set at 80 percent of FSW as shown in Detail I in Figure 3.

E. Move the transducer laterally to TP2 as shown in Figure 3 and get a maximum signal from the through notch. Do not move the transducer to or away from the notch when you do this, only move it laterally. This signal will occur at approximately 87 percent of FSW as shown in Detail II in Figure 3.

F. Adjust the gain control to set the notch signal to 80 percent of full screen height (FSH) as shown in Detail II in Figure 3.

G. Add 6 dB. Make a record of the instrument gain that is used.

5. Inspection Procedure

NOTE: (1) This inspection looks for cracks that are fully through the lower skin at the keel beam and lower beam. Thus, you can use the signal from the top or the bottom surfaces of the fastener hole to find these cracks. Also, you can examine each fastener location in leg I, II, or III of the sound path.

NOTE: (2) The lower skin changes thickness at different locations in the inspection area. Thus, the signal from the fastener holes can occur at different FSW locations. Also, the lower skin thickness is different for different airplanes. The reference standard is thicker than the lower skin for all airplanes.

A. Identify the inspection areas shown in Figure 1 and identify a location to start the inspection. Because this inspection area is from the rear spar to the front spar (at the keel beam and the lower beams), it is recommended that you start the inspection at one of these two locations and work to the opposite end.

B. Make sure the instrument is calibrated as specified in Paragraph 4.

C. Put couplant on the wing lower skin in the area to be examined.

BOEING PROPRIETARY - Copyright © Unpublished Work - See title page for details

D. Put the transducer on the lower skin, adjacent to the fastener hole location to be examined. Move the transducer as necessary to get a maximum signal from the fastener hole. Because the lower skin is different at different locations, this signal can occur between approximately 15 and 90% of FSW.

NOTE: If you cannot easily see the signal from the fastener hole, add gain as necessary to set the signal at 30 percent of FSH. If you add gain, make sure that you set the instrument gain back to the quantity recorded in Paragraph 4.G. before you examine subsequent fastener holes.

E. Slowly move the transducer laterally to one of the edges of the fastener hole. As the signal from the fastener hole starts to decrease, look for a signal to occur to the right of the fastener hole signal, as the notch signal occurred during the instrument calibration. Be sure to keep the transducer perpendicular to the direction of crack growth while you do this. Signals that are 40% or more of FSH and occur directly after the hole signal are possible crack signals and more analysis is necessary. Go to Paragraph 6. for instructions to help make an analysis of all possible crack signals that occur.

NOTE: (1) The location where a crack signal occurs in relation to the hole signal will be different for different diameter fasteners. As the fastener diameter decreases, the distance between the hole and the possible crack signals will also decrease. You can see this occur if you examine the small hole in the reference standard.

NOTE: (2) At fastener holes where possible crack signals occur that are less than 40 percent of FSH, do more scans of these fastener holes at different angular directions. This can only be done where there is sufficient access.

F. Do Paragraph 5.D. and Paragraph 5.E. again but examine the other side of the fastener hole.

NOTE: Where it is possible to do, use the edge of the keel beam (or lower beam) as a probe guide and make a lateral scan of the fastener hole locations to be examined. See flagnote 1 in Figure 1.

G. Do Paragraph 5.C. thru Paragraph 5.F. again to examine the other fastener hole locations at this inspection area.

NOTE: Do a check of the instrument calibration every 30 minutes and after the inspection is completed. If the sensitivity has changed, calibrate the instrument again and do the inspection at all areas examined since the last calibration check.

H. Do Paragraph 5.C. thru Paragraph 5.G. at all inspection areas identified in Figure 1.

6. Inspection Results

A. A signal that is 40 percent or more of FSH that occurs to the right of the hole signal and increases in FSH as the signal from the hole begins to decrease in FSH (or immediately after it decreases to zero percent of FSH) is a possible crack signal. It is necessary to do more analysis of these signals. Go to Paragraph 6.B. and continue to make an analysis of these possible crack signals.

NOTE: It is very possible that cracks that are smaller than the reference notch will not have a signal that is more than 40 percent of FSH. Thus, make a careful record of all possible cracks that are less than 40 percent of FSH to refer to during the subsequent inspection interval.

B. Identify if the crack signal is caused by couplant on the part surface as follows:

(1) Get a maximum signal from the possible crack and keep the transducer at that location.

(2) Remove all couplant that is between the front of the transducer and the inspection area.

(3) If the signal goes away, no more analysis is necessary. If the signal continues to stay, go to Paragraph 6.C. and continue to make an analysis of the possible crack signal.

BOEING PROPRIETARY - Copyright © Unpublished Work - See title page for details

C. Compare the possible crack signal to the signal that you get from the notch in the reference standard. Because the reference standard thickness will be different from the thickness of the lower skin, you can only compare how the possible crack signal occurs in relation to the hole signal.

D. Remove the fastener and do an open hole eddy current inspection as specified in Part 6, 51-00-00, Procedure 16 to make sure there is a crack.

BOEING PROPRIETARY - Copyright © Unpublished Work - See title page for details

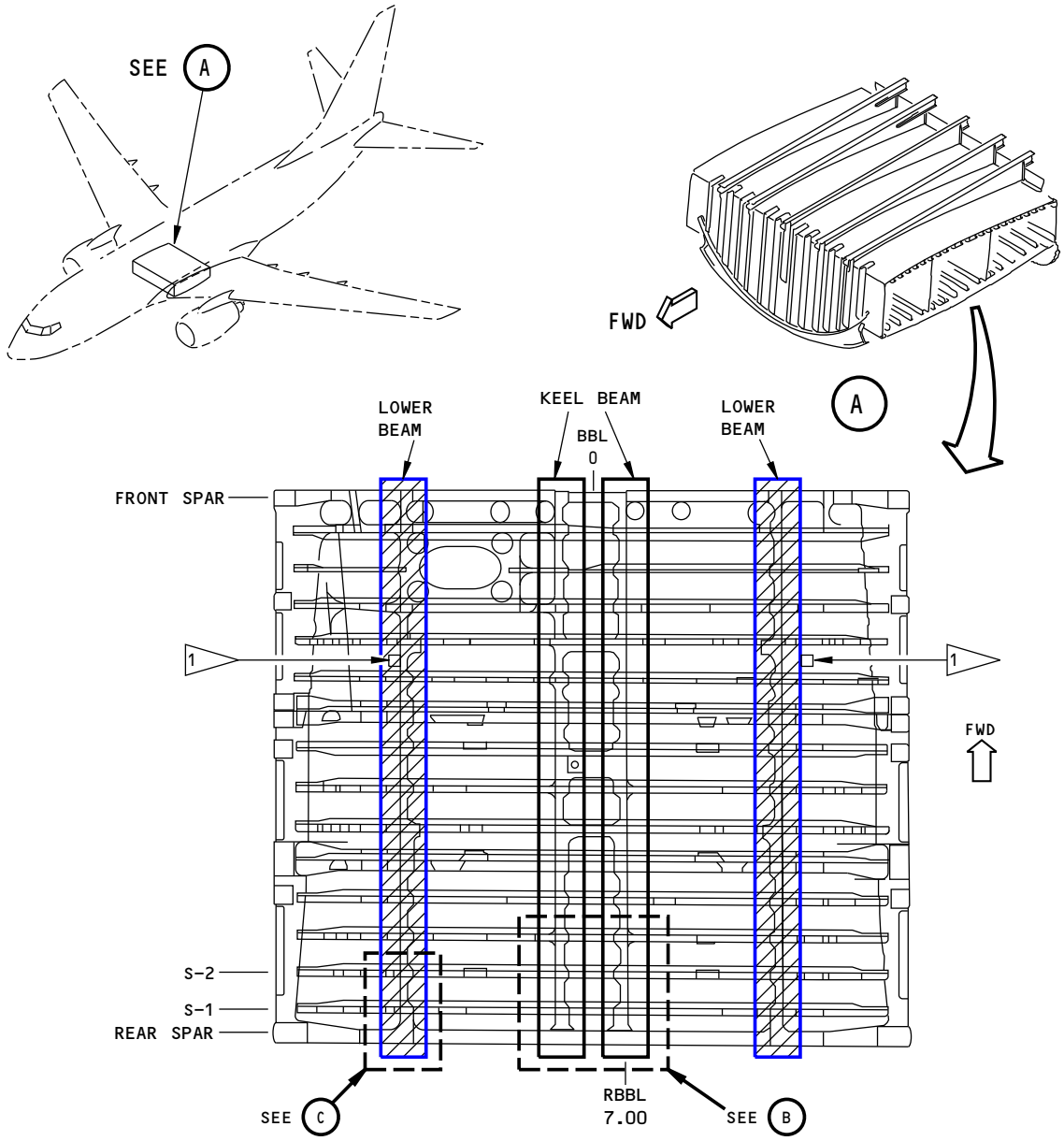

CENTER WING SECTION
(VIEW AS YOU LOOK DOWN)

NOTES:

- THIS IS AN EXTERNAL INSPECTION OF THE LOWER SKIN AT THE KEEL BEAM AND THE LOWER BEAM AREAS

1 DUCT HANGER BRACKET - IT IS NOT NECESSARY TO EXAMINE THE FASTENER LOCATIONS HIDDEN BY THIS STRUCTURE

INSPECTION AREA SPECIFIED IN DTR CHECK FORM ITEM 57-10-12. SEE VIEW B FOR MORE DETAILS.

INSPECTION AREA SPECIFIED IN DTR CHECK FORM ITEM 57-10-15. SEE VIEW C FOR MORE DETAILS.

2175661 S0000478178_V2

Inspection Areas
Figure 1 (Sheet 1 of 3)

BOEING PROPRIETARY - Copyright © Unpublished Work - See title page for details

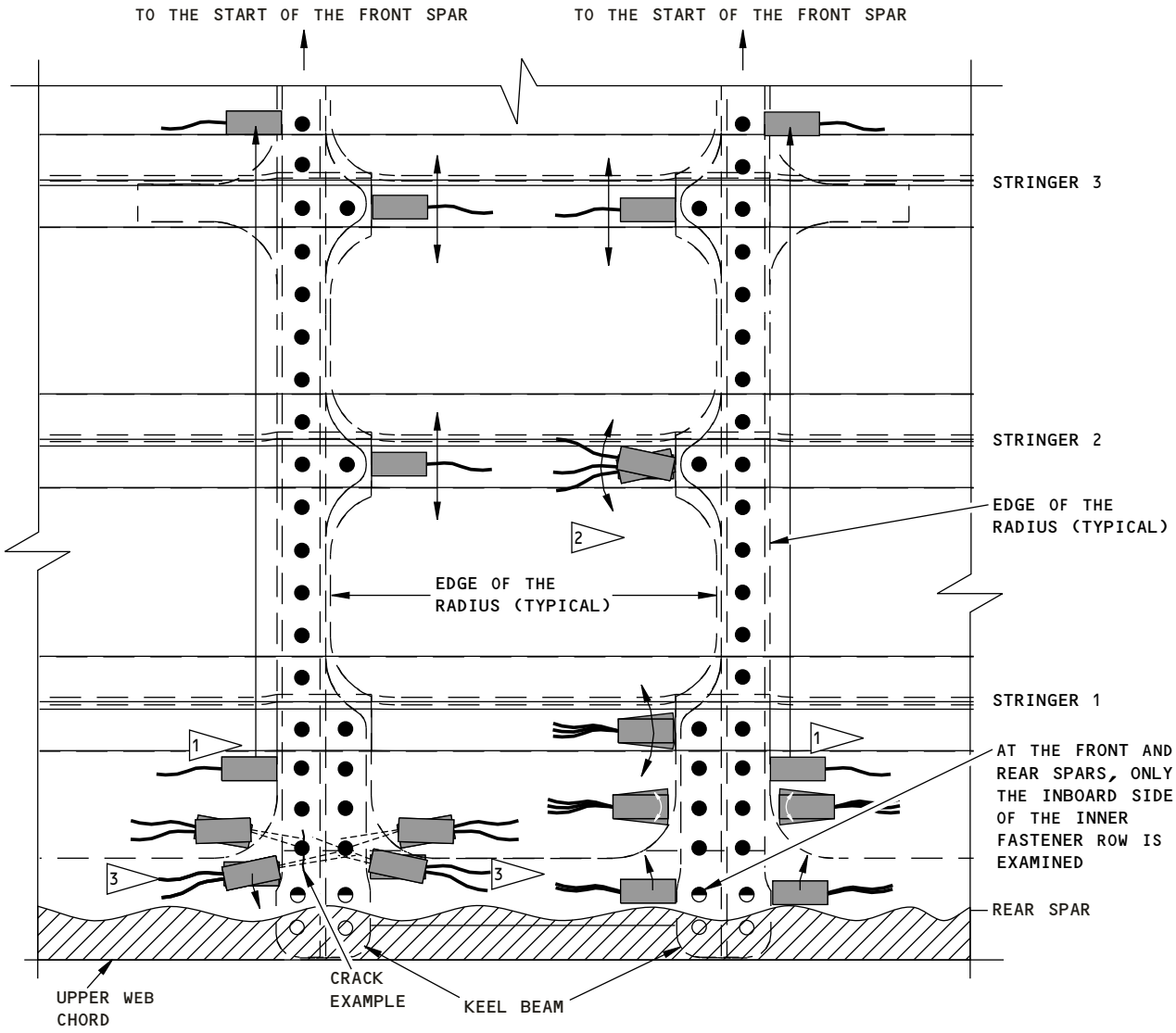

LOWER SKIN PANEL AT THE KEEL BEAM ATTACHMENT

B

NOTES:

- ● FASTENER LOCATIONS TO EXAMINE -- EXAMINE ALL FASTENER LOCATIONS IN THE KEEL AND LOWER BEAMS FROM THE REAR SPAR TO THE FRONT SPAR.
- ◓ AT THESE FASTENER LOCATIONS AT THE FRONT AND REAR SPARS, ONLY THE SIDE THAT IS BLACK MUST BE EXAMINED.
- • THIS INSPECTION LOOKS FOR CRACKS THAT GO THROUGH THE LOWER SKIN PANEL AT THE FASTENER LOCATIONS THAT ATTACH THE KEEL BEAM TO THE AIRPLANE.

1 AT THE EDGE OF THE RADIUS, MAKE A LATERAL SCAN OF THE FASTENER HOLE LOCATIONS TO BE EXAMINED.

2 IT IS ALSO ACCEPTABLE TO MAKE A SCAN OF EACH FASTENER LOCATION AS SHOWN.

3 EXAMINE THE NEAR AND FAR FASTENER LOCATIONS FOR CRACKS AT THE NEAR SIDE OF THESE FASTENERS - TYPICAL AT THE FRONT AND REAR SPARS OF THE TWO KEEL BEAMS.

INSPECTION AREAS SPECIFIED IN DTR CHECK FORM ITEM 57-10-12

2175663 S0000478179_V2

Inspection Areas
Figure 1 (Sheet 2 of 3)

BOEING PROPRIETARY - Copyright © Unpublished Work - See title page for details

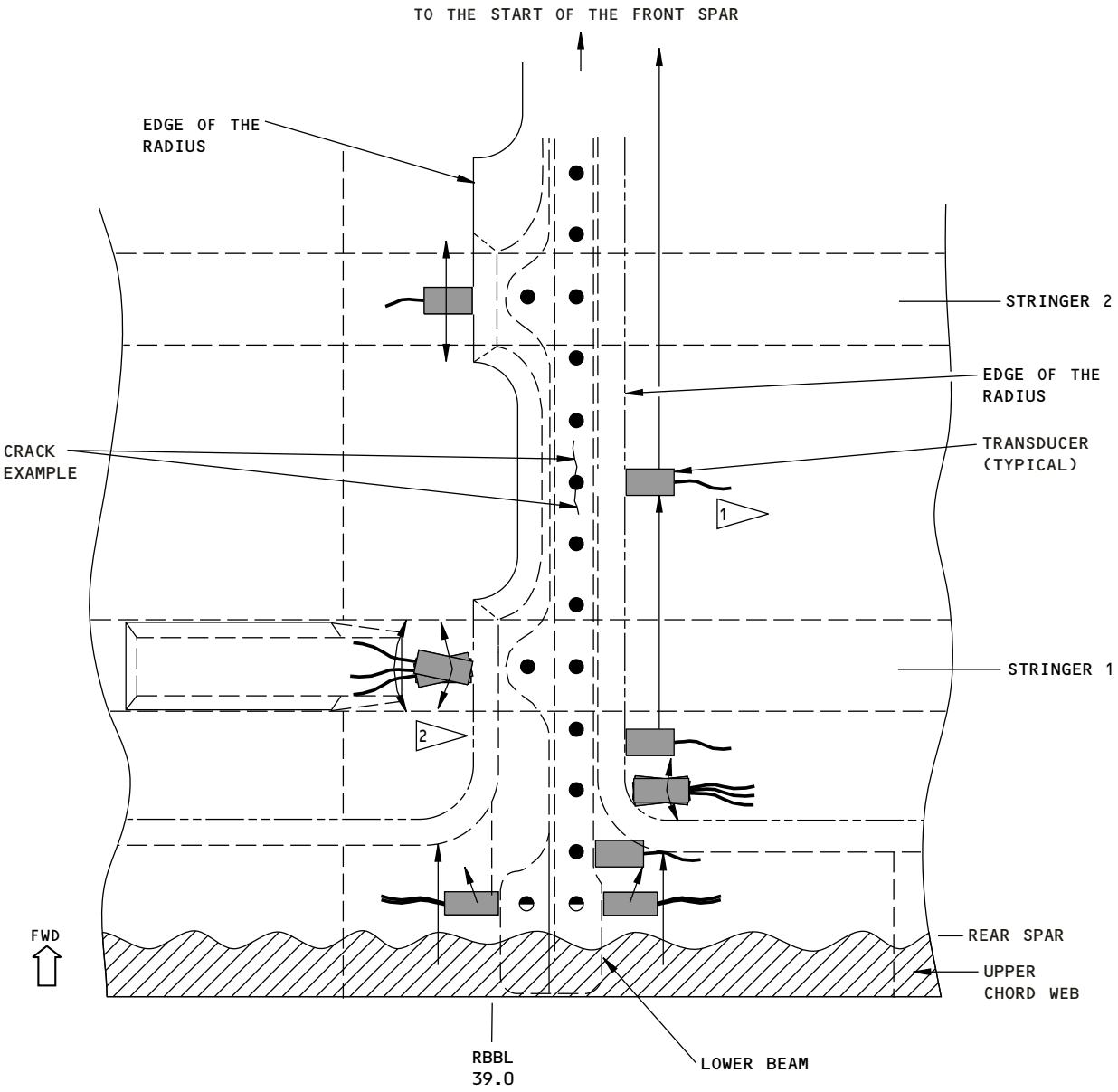

LOWER SKIN PANEL AT THE LOWER BEAM ATTACHMENT

C

INSPECTION AREA SPECIFIED IN DTR CHECK FORM ITEM 57-10-15

2175666 S0000478180_V3

Inspection Areas
Figure 1 (Sheet 3 of 3)

BOEING PROPRIETARY - Copyright © Unpublished Work - See title page for details

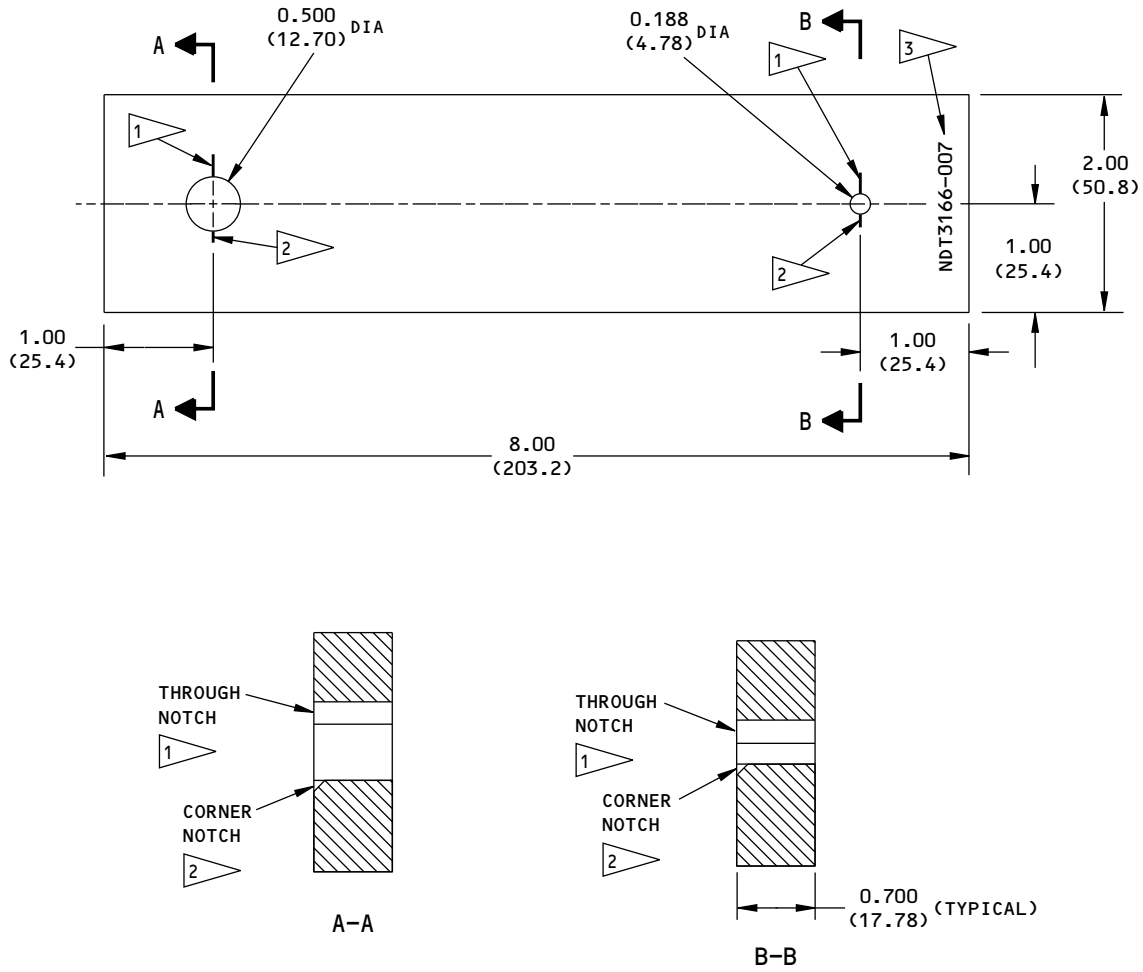

NOTES:

- ALL DIMENSIONS ARE IN INCHES (MILLIMETERS ARE IN PARENTHESES)
- TOLERANCE (UNLESS SPECIFIED DIFFERENTLY):

INCHES	MILLIMETERS	ANGULAR
X.XXX = ±0.005	X.XX = ±0.10	±1°
X.XX = ±0.025	X.X = ±0.5	
X.X = ±0.050	X = ±1	

- MATERIAL: AIRPLANE QUALITY ALUMINUM SUCH AS 2024, 7075-T6
- SURFACE ROUGHNESS: 125 Ra OR BETTER

1. EDM THROUGH NOTCH: 0.200 (5.08) X 0.007 (0.18) WIDE ±0.003 (0.08)
2. EDM CORNER NOTCH: 0.100 (2.54) X 0.100 (2.54) X 0.007 (0.18) WIDE ±0.003 (0.08)
3. ETCH OR STAMP THE REFERENCE STANDARD NUMBER, NDT3166-007, AT APPROXIMATELY THIS LOCATION.

2175668 S0000478181_V1

Reference Standard NDT3166-007
Figure 2

BOEING PROPRIETARY - Copyright © Unpublished Work - See title page for details

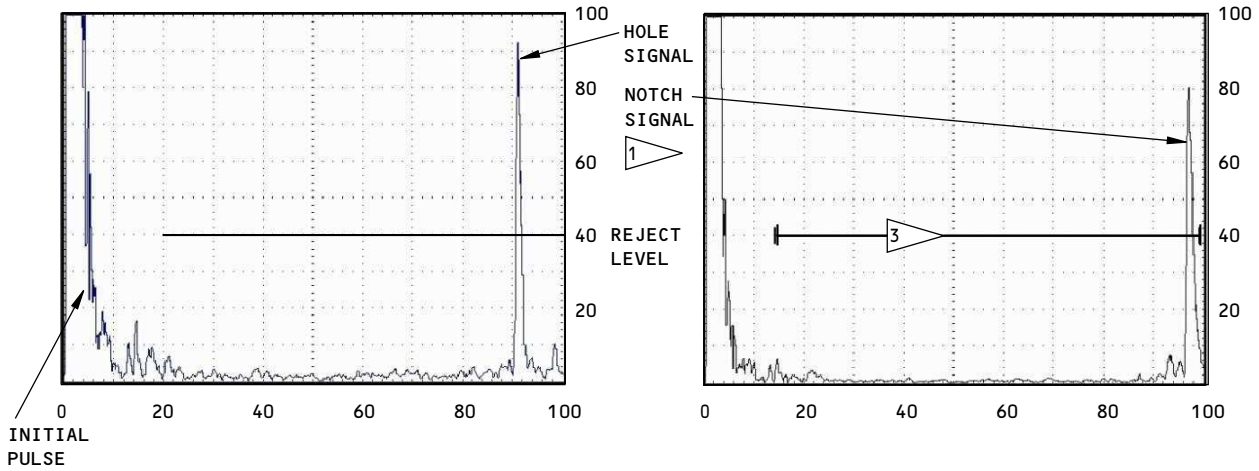

SIGNAL FROM THE HOLE WITH THE TRANSDUCER AT POSITION TP1

DETAIL I

SIGNAL FROM THE NOTCH WITH THE TRANSDUCER AT POSITION TP2

DETAIL II

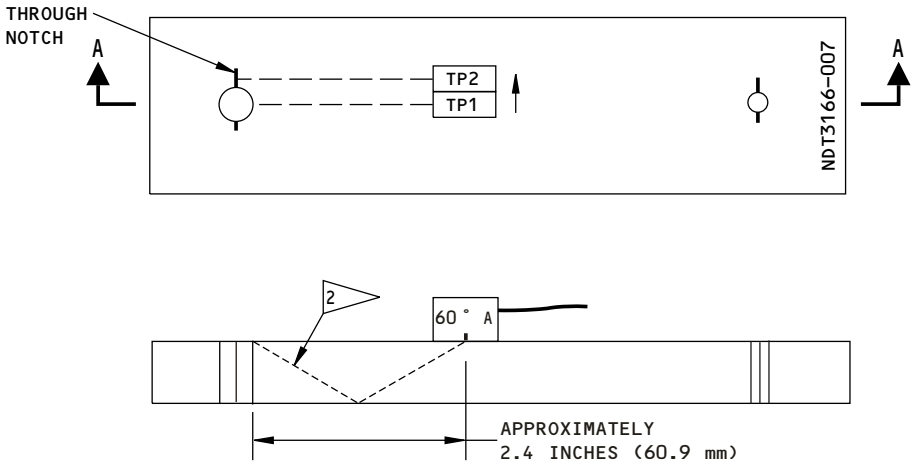

A-A

NOTES:

- TP=TRANSDUCER POSITION
- USE THE THROUGH NOTCH FOR THIS CALIBRATION.

1 SEE HOW AND WHERE THE NOTCH SIGNAL OCCURS ON THE SCREEN IN RELATION TO THE HOLE SIGNAL.

2 THIS IS LEG II OF THE SOUNDPATH.

3 LOCATION WHERE THE FASTENER HOLE AND CRACK SIGNALS CAN OCCUR.

2175671 S0000478182_V1

Instrument Calibration
Figure 3

BOEING PROPRIETARY - Copyright © Unpublished Work - See title page for details

PART 4 - ULTRASONIC

WING SPAR CHORDS AT THE CHORDWISE SKIN SPLICES FOR THE UPPER AND LOWER SKIN PANELS

1. Purpose

A. This procedure examines the upper and lower chords of the front spar and the lower chord of the rear spar for cracks at the wing skin splices identified in Figure 1.

B. Cracks can start at the fastener holes in the horizontal flange of the spar chord at the mating surface (faying surface) with the wing skins. If cracks occur, they will grow perpendicular to the long direction of the spar chord.

C. The upper and lower chords are aluminum.

D. 737 Maintenance Planning Document (MPD) Damage Tolerance Record (DTR) Check Form Reference:

(1) Item: 57-20-04/05/16

2. Equipment

A. General

(1) All ultrasonic equipment that can be calibrated as specified in Paragraph 4. can be used to do this inspection.

(2) Refer to Part 1, 51-01-00, for data about the equipment manufacturers.

B. Instrument

(1) Use an ultrasonic instrument that:

(a) Operates in the pulse-echo mode.

(b) Operates in a frequency range of 4 to 6 MHz.

NOTE: Broadband instruments can be used if they can be calibrated as specified in this procedure.

(2) The instrument that follows was used to help prepare this procedure.

(a) USM Go; GE

C. Transducer - Use a 5 MHz transducer that can put a 60 degree shear wave into aluminum and has a maximum length of 0.75 inches (19.1 mm). A top-mounted connector is recommended. The transducer that follows was used to help prepare this procedure.

(1) SUSM 560AT, 5 MHz; Olympus

D. Reference Standard - Use reference standard NDT3166-006. See Figure 2 for data about this reference standard.

E. Couplant

(1) Use an ultrasonic couplant that will not cause corrosion or other damage to the airplane.

BOEING PROPRIETARY - Copyright © Unpublished Work - See title page for details

3. **Prepare for the Inspection**

WARNING: PERSONNEL WHO ENTER A FUEL TANK MUST KNOW THE PRECAUTIONS AND SAFETY PROCEDURES CONTAINED IN CHAPTER 28 OF THE BOEING AIRCRAFT MAINTENANCE MANUAL. DANGEROUS FUMES AND THE POSSIBILITY OF AN EXPLOSION EXIST IN THE FUEL TANKS.

A. Get access to the inspection area through the access holes in the wing fuel tank.

B. Remove sealant as necessary to fully examine the applicable fastener holes.

4. **Instrument Calibration**

NOTE: Only the far surface (faying surface) of the fastener holes must be examined.

A. Set the instrument frequency in the 4 to 6 MHz range.

B. Put couplant on the reference standard at transducer position 1 (TP1) and TP2 as shown in Figure 3.

C. Put the transducer at TP1 and move it as necessary to get a maximum signal from the far surface of the hole. The approximate surface distance between the transducer and the hole is given in Figure 3. This distance can be different for transducers that are not exactly 60 degrees.

D. Adjust the instrument delay and range controls so that the initial pulse signal is at 0 percent of full screen width (FSW) and the maximum signal from the far surface of the hole is at 70 percent of FSW as shown in Detail I in Figure 3.

E. Move the transducer laterally to TP2 as shown in Figure 3 and get a maximum signal from the 0.10 inch (6.4 mm) corner notch. Do not move the transducer to or away from the notch when you do this, only move it laterally. This signal will occur at approximately 80 percent of FSW as shown in Detail II in Figure 3.

F. Adjust the gain control to set the notch signal to 80 percent of full screen height (FSH) as shown in Detail II in Figure 3.

G. Add 18 dB. Make a record of the instrument gain that is used.

5. **Inspection Procedure**

NOTE: Three different inspection areas are examined with this procedure. Although the inspection locations are different, the inspection is the same at each location.

A. Identify the inspection areas shown in Figure 1 and identify a location to start the inspection.

B. Make sure the instrument is calibrated as specified in Paragraph 4.

C. Put couplant on the horizontal flange of the spar chord at the transducer inspection areas identified by flagnote 3 in Figure 1.

D. Put the transducer on the chord adjacent to the fastener collar at the hole location to be examined and move the transducer as necessary to get a maximum signal from the far surface of the fastener hole. Because the chord thickness is different from the reference standard thickness by a small quantity, this signal will occur at less than 70% of FSW.

NOTE: If you cannot easily see the signal from the fastener hole, add gain as necessary to set the signal at 30 percent of FSH.

BOEING PROPRIETARY - Copyright © Unpublished Work - See title page for details

E. Slowly move the transducer laterally to one of the edges of the fastener hole. As the fastener hole signal starts to decrease, look for a signal to occur to the right of the fastener hole signal, as the notch signal occurred during instrument calibration. Be sure to keep the transducer perpendicular to the direction of the possible crack growth while you do this. Signals that are 40% or more of FSH that occur directly after the hole signal are possible crack signals and more analysis is necessary. Go to Paragraph 6. for instructions to help make an analysis of all possible crack signals that occur.

NOTE: (1) The location where a crack signal occurs in relation to the hole signal will be different for different diameter fasteners. As the fastener diameter decreases, the distance between the hole and the possible crack signals will also decrease. You can see this occur if you examine the small hole in the reference standard.

NOTE: (2) At fastener holes where possible crack signals occur that are less than 40 percent of FSH, do more scans of these fastener holes at different angular directions as shown in Figure 1, flagnote 4.

NOTE: (3) It is also acceptable to examine the fastener holes as shown in Figure 1, flagnote 2. Be sure that the hole signal is from the far surface.

F. Do Paragraph 5.D. and Paragraph 5.E. again but examine the other side of the fastener hole.

G. Do Paragraph 5.C. thru Paragraph 5.F. again to examine the other fastener hole locations at this inspection area.

NOTE: Do a check of the instrument calibration every 30 minutes and after the inspection is completed. If the sensitivity has changed, calibrate the instrument again and do the inspection at all areas examined since the last calibration check.

H. Do Paragraph 5.C. thru Paragraph 5.G. at all inspection areas identified in Figure 1 on the left and right wings.

6. Inspection Results

A. A signal that is 40 percent or more of FSH that occurs to the right of the hole signal and increases in FSH as the signal from the hole starts to decrease in FSH (or immediately after it decreases to zero percent of FSH) is a possible crack signal. It is necessary to do more analysis of these signals. Go to Paragraph 6.B. to continue the analysis of these possible crack signals.

NOTE: It is very possible that cracks smaller than the reference notch will have a signal that is less than 40 percent of FSH. Thus, make a careful record of all possible cracks that are less than 40 percent of FSH to refer to during the subsequent inspection interval.

B. Identify if the crack signal is caused by couplant on the part surface as follows:

(1) Get a maximum signal from the possible crack and keep the transducer at that location.

(2) Remove all couplant that is between the front of the transducer and the inspection area.

(3) If the signal goes away, no more analysis is necessary. If the signal continues to stay, go to Paragraph 6.C. and continue to make an analysis of the possible crack signal.

C. Compare the possible crack signal to the signal that you get from the notch in the reference standard. Because the reference standard thickness will be different from the thickness of the spar chord, you can only compare how the possible crack signal occurs in relation to the hole signal.

D. Remove the fastener and do an open hole eddy current inspection as specified in Part 6, 51-00-00, Procedure 16 to make sure there is a crack.

BOEING PROPRIETARY - Copyright © Unpublished Work - See title page for details

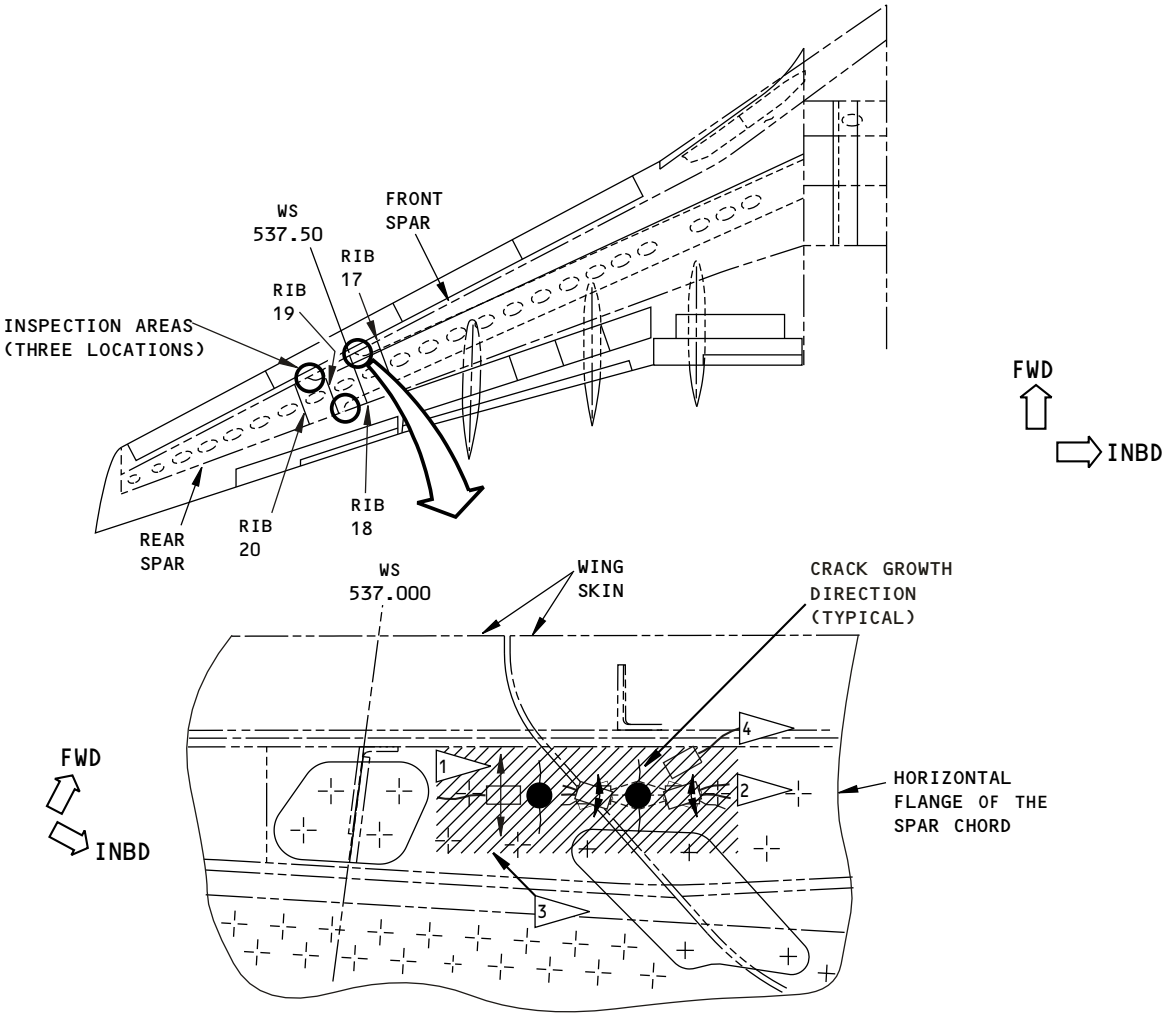

LOWER CHORD BETWEEN RIBS 17 AND 18
THE TOP VIEW OF THE LEFT WING IS SHOWN;
THE RIGHT WING VIEW IS OPPOSITE

NOTES:

● FASTENERS TO EXAMINE

TRANSDUCER INSPECTION AREA

- THE PURPOSE OF THIS INSPECTION IS TO FIND CRACKS AT THE FAR SURFACE (FAYING SURFACE) OF THE SPAR CHORD.
- USE THIS PROCEDURE TO EXAMINE THE TWO FASTENERS SHOWN ABOVE AT THESE LOCATIONS:
  1) THE LOWER CHORD OF THE FRONT SPAR BETWEEN RIBS 17 AND 18
  2) THE UPPER CHORD OF THE FRONT SPAR BETWEEN RIBS 19 AND 20
  3) THE LOWER CHORD OF THE REAR SPAR BETWEEN RIBS 18 AND 19
- DO THESE INSPECTIONS ON THE LEFT AND RIGHT WINGS.

1 LATERAL SCAN: KEEP THE TRANSDUCER PERPENDICULAR TO THE CRACK GROWTH DIRECTION.

2 IT IS ALSO ACCEPTABLE TO EXAMINE THE FASTENER HOLES AS SHOWN.

3 TRANSDUCER INSPECTION AREA.

4 AT FASTENER LOCATIONS WHERE POSSIBLE CRACK SIGNALS OCCUR THAT ARE LESS THAN 40% OF FSH, DO SCANS AT DIFFERENT ANGULAR DIRECTIONS TO MAKE SURE YOU GET THE MAXIMUM SIGNAL FROM THE POSSIBLE CRACK.

2175694 S0000478187_V3

Inspection Areas
Figure 1

BOEING PROPRIETARY - Copyright © Unpublished Work - See title page for details

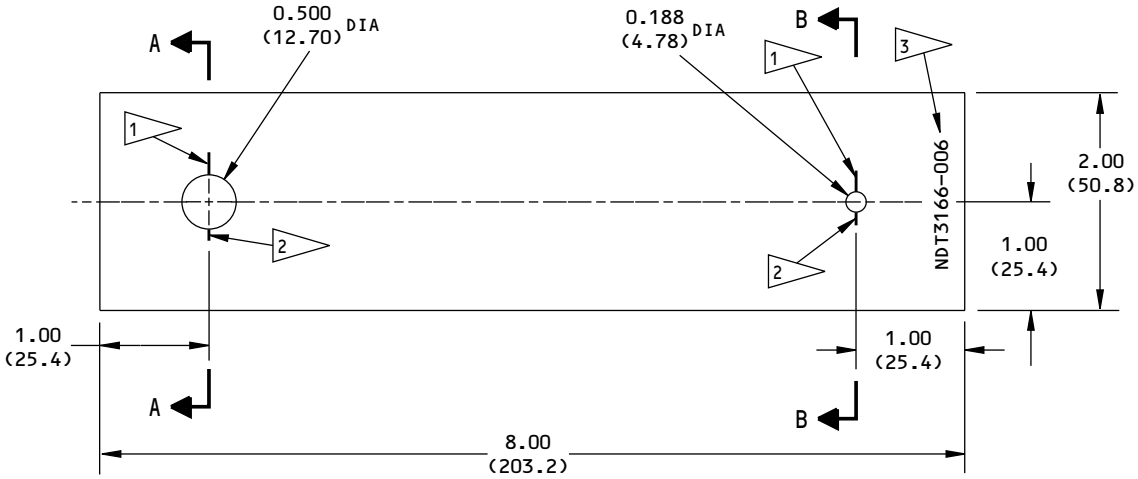

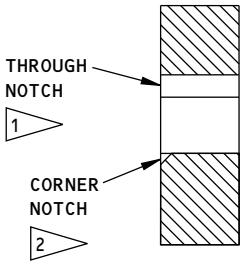

A-A

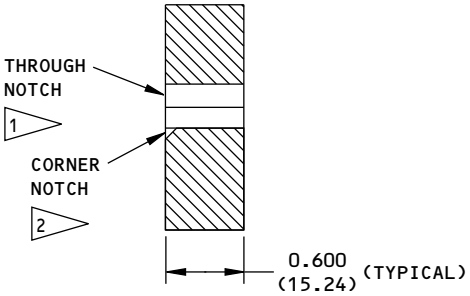

B-B

NOTES:

- ALL DIMENSIONS ARE IN INCHES (MILLIMETERS ARE IN PARENTHESES)
- TOLERANCE (UNLESS SPECIFIED DIFFERENTLY):

INCHES	MILLIMETERS	ANGULAR
X.XXX = ±0.005	X.XX = ±0.10	±1 °
X.XX = ±0.025	X.X = ±0.5	
X.X = ±0.050	X = ±1	

- MATERIAL: AIRPLANE QUALITY ALUMINUM SUCH AS 2024, 7075-T6
- SURFACE ROUGHNESS: 125 Ra OR BETTER

1 EDM THROUGH NOTCH: 0.200 (5.08) X 0.007 (0.18) WIDE ±0.003 (0.08)

2 EDM CORNER NOTCH: 0.100 (2.54) X 0.100 (2.54) X 0.007 (0.18) WIDE ±0.003 (0.08)

3 ETCH OR STAMP THE REFERENCE STANDARD NUMBER, NDT3166-006, AT APPROXIMATELY THIS LOCATION.

2175702 S0000478188_V2

Reference Standard NDT3166-006
Figure 2

BOEING PROPRIETARY - Copyright © Unpublished Work - See title page for details

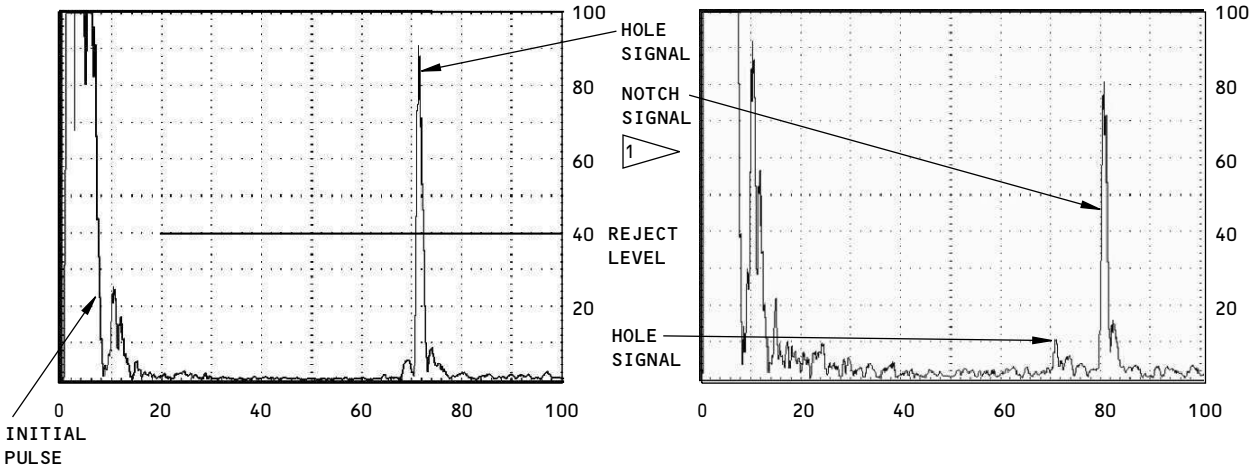

SIGNAL FROM THE HOLE WITH THE TRANSDUCER AT POSITION TP1

DETAIL I

SIGNAL FROM THE NOTCH WITH THE TRANSDUCER AT POSITION TP2

DETAIL II

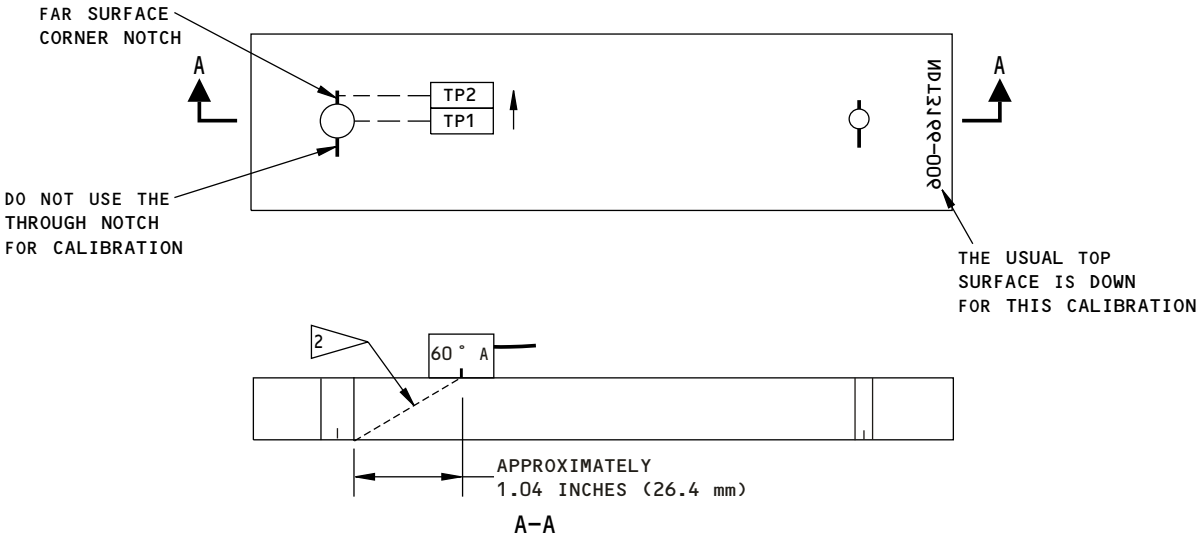

A–A

NOTES:

- TP = TRANSDUCER POSITION
- FOR THIS CALIBRATION, YOU MUST TURN THE REFERENCE STANDARD SO THE BOTTOM SURFACE IS UP AND THE CORNER NOTCH IS AT THE FAR SURFACE.

1 SEE HOW AND WHERE THE NOTCH SIGNAL OCCURS ON THE SCREEN IN RELATION TO THE HOLE SIGNAL.

2 THIS IS "LEG 1" OF THE SOUND PATH

2175704 S0000478189_V2

Instrument Calibration
Figure 3

BOEING PROPRIETARY - Copyright © Unpublished Work - See title page for details

PART 4 - ULTRASONIC

WING LOWER SKIN AT THE FLAP TRACK AND NACELLE FAIRINGS

1. Purpose

A. Use this procedure to help examine the wing lower skin for cracks at the fastener locations that are hidden by the rub strips. The rub strips are below the flap track fairings in rib bays 6, 9, 10, 13 and 14, and below the nacelle fairings in rib bays 5, 6, and 7. See Figure 1 for the inspection area.

B. The wing skin is aluminum.

C. 737 Maintenance Planning Document (MPD) Damage Tolerance Record (DTR) Check Form Reference:

(1) Item: 57-20-01/-02/-03/-04/-05/-08-1

2. Equipment

A. General

(1) All ultrasonic equipment that can be calibrated as specified in Paragraph 4. can be used to do this inspection.

(2) Refer to Part 1, 51-01-00, for data about the equipment manufacturers.

B. Instrument

(1) Use an ultrasonic instrument that:

(a) Operates in the pulse-echo mode.

(b) Operates in a frequency range of 4 to 6 MHz.

NOTE: Broadband instruments can be used if they can be calibrated as specified in this procedure.

(2) The instrument that follows was used to help prepare this procedure.

(a) USM Go; GE

C. Transducer - Use a 5 MHz transducer that can put a 60 degree shear wave into aluminum and has a maximum length of 1.00 inch (25.4 mm) and a maximum width of 0.50 inch (12.7 mm). A top-mounted connector is recommended. The transducers that follow were used to help prepare this procedure.

NOTE: Use transducer LA-605T at all locations where there is sufficient access.

(1) SUSM 560AT, 5 MHz, 0.25 inch (6.4 mm) diameter element; Olympus

(2) LA-605T, 5 MHz, 0.38 inch (9.6 mm) diameter element; Techna

D. Reference Standard - Use reference standard NDT3166-007. See Figure 2 for data about this reference standard.

E. Couplant

(1) Use an ultrasonic couplant that will not cause corrosion or other damage to the airplane.

3. Prepare for the Inspection

A. Fully clean the inspection surface. If there is loose paint or paint chips, smooth the area as necessary by an approved procedure that will not damage the airplane.

BOEING PROPRIETARY - Copyright © Unpublished Work - See title page for details

B. Visually identify the fasteners that are adjacent to the rub strip to help find the fasteners that are hidden below the rub strip. Refer to the Boeing engineering drawings for your applicable wing configuration to help find these fasteners.

4. Instrument Calibration

NOTE: Only the far surface (mating surface) of the fastener holes must be examined. If adjacent structure or fasteners prevent an inspection in the first leg of the sound path, then calibrate again but use the third leg of the sound path for the inspection. See Figure 3.

A. Set the instrument frequency in the 4 to 6 MHz range.

B. Put couplant on the reference standard at transducer position 1 (TP1) and TP2 as shown in Figure 3.

C. Put the transducer at TP1 and move it as necessary to get a maximum signal from the top surface of the hole. The approximate surface distance between the transducer and the hole is given in Figure 3. This distance can be different for transducers that are not exactly 60 degrees.

D. Adjust the instrument delay and range controls so that the initial pulse signal is set at 0 percent of full screen width (FSW) and the maximum signal from the far surface of the hole is set at 50 percent of FSW as shown in Detail I in Figure 3.

E. Move the transducer laterally to TP2 as shown in Figure 3 and get a maximum signal from the bottom surface of the through notch. Do not move the transducer to or away from the notch when you do this, only move it laterally. This signal will occur at approximately 57 percent of FSW as shown in Detail II in Figure 3.

F. Adjust the gain control to set the notch signal to 80 percent of full screen height (FSH) as shown in Detail II in Figure 3.

G. Add 12 dB. Make a record of the instrument gain that is used.

5. Inspection Procedure

A. Identify the inspection areas shown in Figure 1 and identify a location to start the inspection.

B. Make sure the instrument is calibrated as specified in Paragraph 4.

C. Put couplant on the wing lower skin, adjacent to the rub strip. See Figure 1 for the location of the rub strips.

D. Put the transducer on the wing lower skin, adjacent to the rub strip and point the transducer at the fastener location to be examined. Move the transducer as necessary to get a maximum signal from the fastener hole. Because the thickness of the lower skin is different at different locations along the rub strips, the signal from the fastener hole can occur at less than 50% of FSW. At some fastener locations, the signal from the fastener hole can be more than 50% of FSW by a small quantity.

NOTE: If you cannot easily see the signal from the fastener hole, add gain as necessary to set the signal at 30 percent of FSH. If you add gain, make sure that you set the instrument gain back to the quantity recorded in Paragraph 4.G. before you examine subsequent fastener holes.

BOEING PROPRIETARY - Copyright © Unpublished Work - See title page for details

E. Slowly turn the transducer to point the sound beam to one side of the fastener hole and continue to turn the transducer until the fastener hole signal decreases to zero percent of FSH. As you do this, look for a crack signal to come into view to the right of the fastener hole signal. Signals that are 40% or more of FSH and occur directly after the hole signal are possible crack signals and more analysis is necessary. Go to Paragraph 6. for instructions to help make an analysis of all possible crack signals that occur.

NOTE: (1) The location where a crack signal occurs in relation to the hole signal will be different for different diameter fasteners. As the fastener diameter decreases, the distance between the hole and the possible crack signals will also decrease. You can see this occur if you examine the small hole in the reference standard.

NOTE: (2) At fastener holes where possible crack signals occur that are less than 40 percent of FSH, do more scans of these fastener holes at different angular directions. This can only be done where there is sufficient access.

F. Do Paragraph 5.D. and Paragraph 5.E. again but examine the other side of the hole.

G. Do Paragraph 5.C. thru Paragraph 5.F. again to examine all fastener locations that are hidden by the rub strips identified in Figure 1 on the left and right wings.

NOTE: Do a check of the instrument calibration every 30 minutes and after the inspection is completed. If the sensitivity has changed, calibrate the instrument again and do the inspection at all areas examined since the last calibration check.

6. Inspection Results

A. A signal that is 40 percent or more of FSH that occurs to the right of the hole signal and increases in FSH as the signal from the hole starts to decrease in FSH (or immediately after it decreases to zero percent of FSH) is a possible crack signal. It is necessary to do more analysis of these signals. Go to Paragraph 6.B. to continue the analysis of these possible crack signals.

NOTE: It is very possible that cracks that are smaller than the reference notch will have a signal that is less than 40 percent of FSH. Thus, make a careful record of all possible cracks that are less than 40 percent of FSH to refer to during the subsequent inspection interval.

B. Identify if the crack signal is caused by couplant on the part surface as follows:

(1) Get a maximum signal from the possible crack and keep the transducer at that location.

(2) Remove all couplant that is between the front of the transducer and the inspection area.

(3) If the signal goes away, no more analysis is necessary. If the signal continues to stay, go to Paragraph 6.C. and continue to make an analysis of the possible crack signal.

C. Compare the possible crack signal to the signal that you get from the notch in the reference standard. Because the reference standard thickness will be different from the thickness of the wing lower skin, you can only compare how the possible crack signal occurs in relation to the hole signal.

D. Remove the fastener and do an open hole eddy current inspection as specified in Part 6, 51-00-00, Procedure 16 to make sure there is a crack.

BOEING PROPRIETARY - Copyright © Unpublished Work - See title page for details

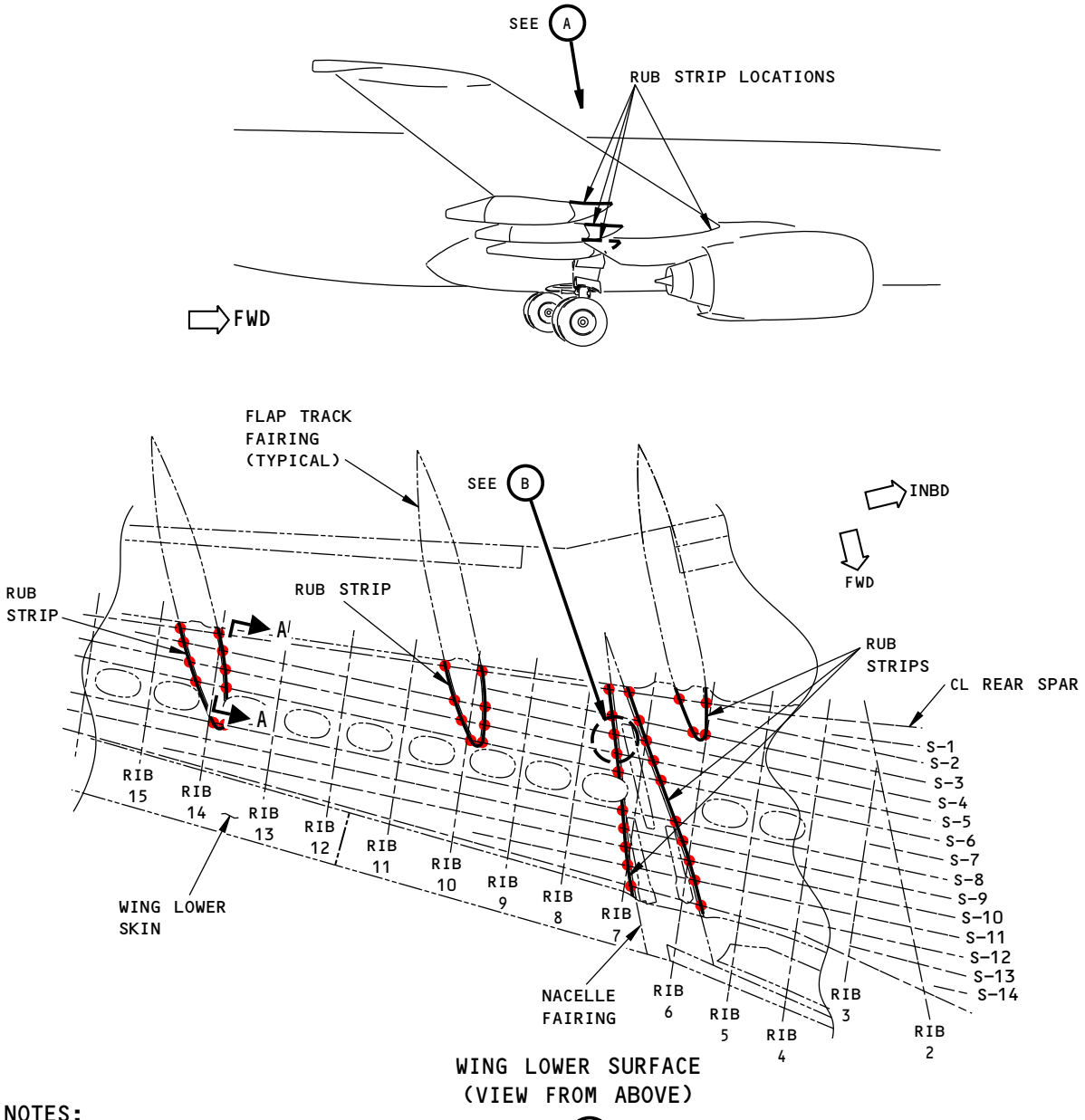

NOTES:

- WING LOWER SKIN INSPECTION AREAS AT THE HIDDEN FASTENER LOCATIONS
- THE RIGHT WING IS SHOWN; THE LEFT WING IS ALMOST THE SAME
- MAKE A SCAN OF THE WING LOWER SKIN AT EACH FASTENER LOCATION THAT IS HIDDEN BY THE RUB STRIPS. THESE FASTENER LOCATIONS ARE AT THE WING SKIN TO STRINGER INTERFACES AND THE WING SKIN TO FRONT AND REAR SPAR INTERFACES.

2175722 S0000478201_V3

Inspection Areas
Figure 1 (Sheet 1 of 2)

BOEING PROPRIETARY - Copyright © Unpublished Work - See title page for details

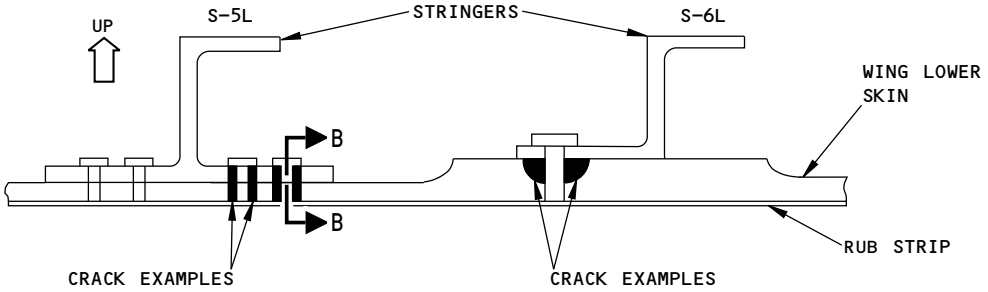

A-A

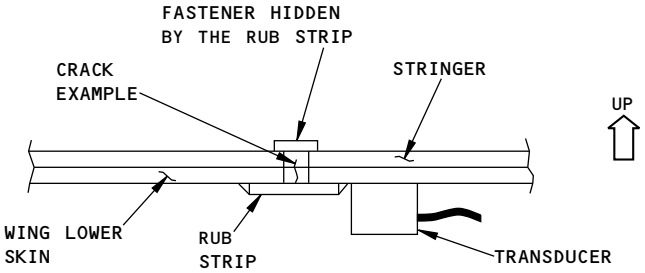

(NOT TO SCALE)
B-B

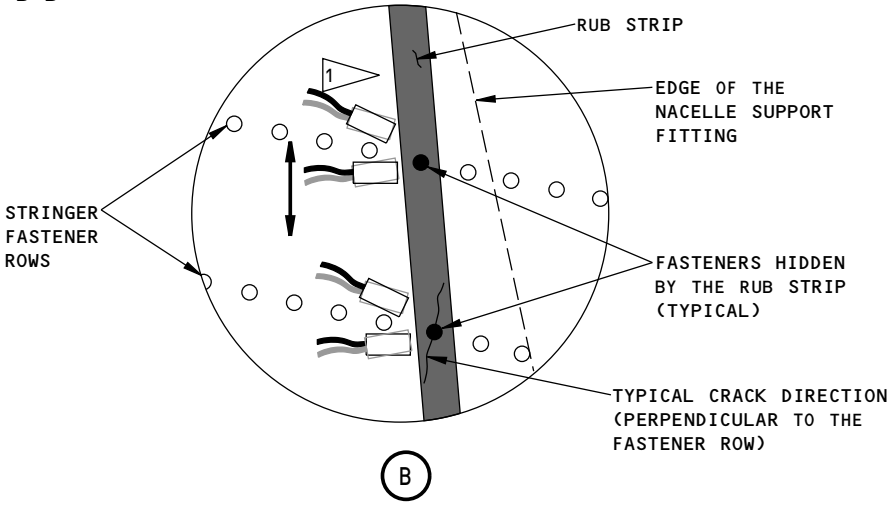

NOTES:

- EXAMINE ALL FASTENER LOCATIONS THAT ARE HIDDEN BY THE RUB STRIPS SHOWN IN FIGURE 1.
- CRACKS CAN BEGIN IN THE WING LOWER STRINGER AND GROW INTO THE SKIN. THUS, LOOK FOR CRACKS AT THE FAR SURFACE (MATING SURFACE) OF THE WING SKIN.

1 PUT THE TRANSDUCER AT LOCATIONS THAT WILL BEST FIND A CRACK IN THE WING LOWER SKIN. THE TRANSDUCER MUST BE SET TO FIND A CRACK AT THE FAR SURFACE (MATING SURFACE) OF THE WING LOWER SKIN.

2175723 S0000478202_V3

Inspection Areas
Figure 1 (Sheet 2 of 2)

BOEING PROPRIETARY - Copyright © Unpublished Work - See title page for details

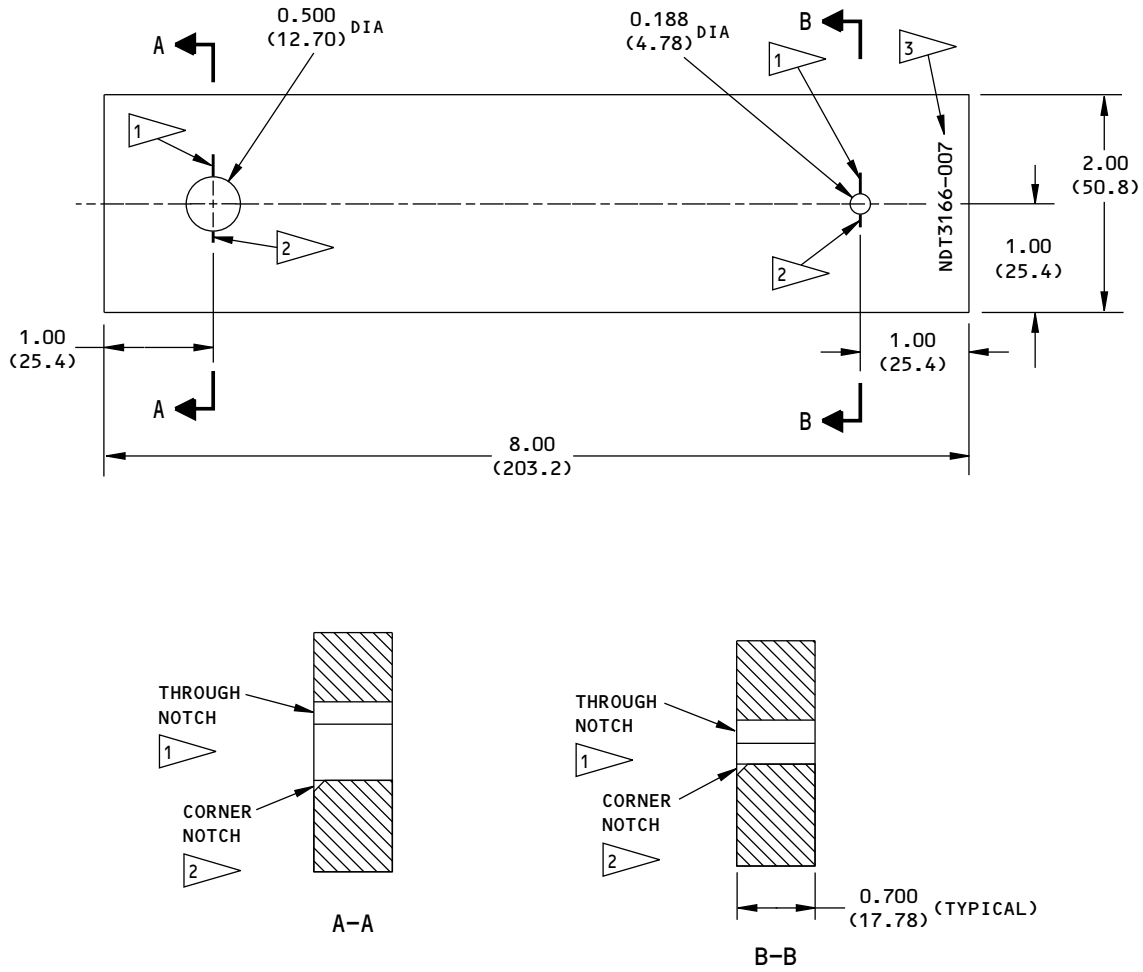

NOTES:

- ALL DIMENSIONS ARE IN INCHES (MILLIMETERS ARE IN PARENTHESES)
- TOLERANCE (UNLESS SPECIFIED DIFFERENTLY):

INCHES	MILLIMETERS	ANGULAR
X.XXX = ±0.005	X.XX = ±0.10	±1°
X.XX = ±0.025	X.X = ±0.5	
X.X = ±0.050	X = ±1	

- MATERIAL: AIRPLANE QUALITY ALUMINUM SUCH AS 2024, 7075-T6
- SURFACE ROUGHNESS: 125 Ra OR BETTER

1 EDM THROUGH NOTCH: 0.200 (5.08) X 0.007 (0.18) WIDE ±0.003 (0.08)

2 EDM CORNER NOTCH: 0.100 (2.54) X 0.100 (2.54) X 0.007 (0.18) WIDE ±0.003 (0.08)

3 ETCH OR STAMP THE REFERENCE STANDARD NUMBER, NDT3166-007, AT APPROXIMATELY THIS LOCATION.

2175724 S0000478204_V1

Reference Standard NDT3166-007
Figure 2

BOEING PROPRIETARY - Copyright © Unpublished Work - See title page for details

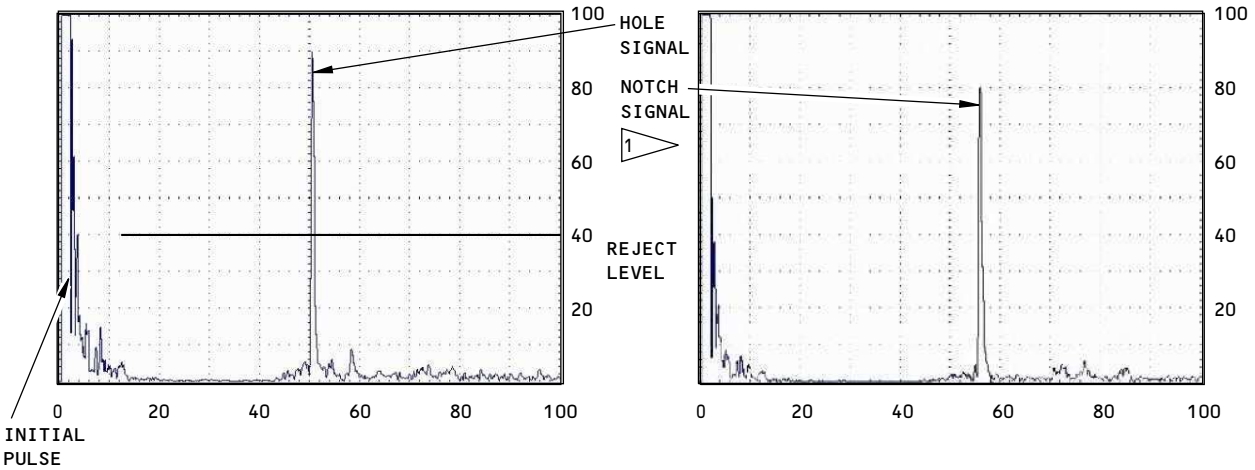

SIGNAL FROM THE HOLE WITH THE TRANSDUCER AT POSITION TP1

DETAIL I

SIGNAL FROM THE NOTCH WITH THE TRANSDUCER AT POSITION TP2

DETAIL II

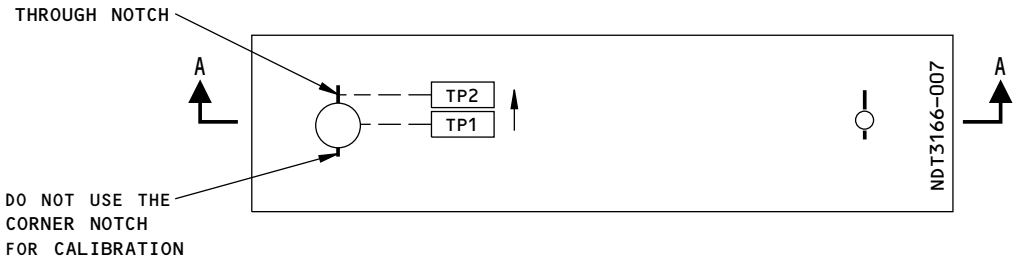

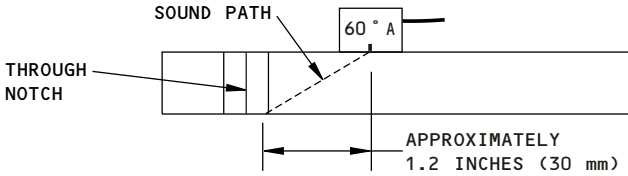

A-A

NOTES:

- TP=TRANSDUCER POSITION

1 SEE HOW AND WHERE THE NOTCH SIGNAL OCCURS ON THE SCREEN IN RELATION TO THE HOLE SIGNAL.

2175728 S0000478205_V2

Instrument Calibration
Figure 3

BOEING PROPRIETARY - Copyright © Unpublished Work - See title page for details

PART 4 - ULTRASONIC

OUTER WING - WEB FLANGE OF THE LOWER CHORD OF THE REAR SPAR

1. Purpose

A. Use this procedure to help examine the web flange of the lower chord of the rear spar for cracks at fastener locations that are hidden by stiffeners, rib posts, and other fittings. The inspection area is from rib 1 to rib 25 on the left and right wings. See Figure 1 for the inspection areas.

B. The lower chord is aluminum.

C. 737 Maintenance Planning Document (MPD) Damage Tolerance Record (DTR) Check Form Reference:

(1) Item: 57-20-05-3

2. Equipment

A. General

(1) All ultrasonic equipment that can be calibrated as specified in Paragraph 4. can be used to do this inspection.

(2) Refer to Part 1, 51-01-00, for data about the equipment manufacturers.

B. Instrument

(1) Use an ultrasonic instrument that:

(a) Operates in the pulse-echo mode.

(b) Operates in a frequency range of 4 to 6 MHz.

NOTE: Broadband instruments can be used if they can be calibrated as specified in this procedure.

(2) The instrument that follows was used to help prepare this procedure.

(a) USM Go; GE

C. Transducers - One 5 MHz transducer that puts a 70 degree refracted shear wave into aluminum and has a top mounted connector is necessary to do this inspection. Use transducers that have a maximum length of 0.75 inch (19.1 mm) and a maximum width of 0.38 inch (9.5 mm). The transducer that follows was used to help prepare this procedure.

(1) SUSM 570AT (70°A), 5 MHz; Olympus

D. Reference Standard - Use reference standard NDT3166-003. See Figure 2 for data about this reference standard.

E. Couplant

(1) Use an ultrasonic couplant that will not cause corrosion or other damage to the airplane.

BOEING PROPRIETARY - Copyright © Unpublished Work - See title page for details

3. **Prepare for the Inspection**

WARNING: PERSONNEL WHO ENTER A FUEL TANK MUST KNOW THE PRECAUTIONS AND SAFETY PROCEDURES CONTAINED IN CHAPTER 28 OF THE BOEING AIRCRAFT MAINTENANCE MANUAL. DANGEROUS FUMES AND THE POSSIBILITY OF AN EXPLOSION EXIST IN THE FUEL TANKS.

A. Remove sealant as necessary to fully examine the applicable fastener holes. Clean the inspection surface if necessary.

B. If there is loose paint or paint chips, smooth the area as necessary by an approved procedure that will not damage the airplane.

C. At the completion of this inspection, replace all sealant that was removed.

4. **Instrument Calibration**

NOTE: This calibration uses the third leg of the sound path (one and one-half full skips) for the instrument calibration. With this calibration you can put the transducer farther away from the applicable fastener than what is usual to do this inspection.

A. Set the instrument frequency in the 4 to 6 MHz range.

B. Put couplant on the reference standard between TP1 and TP2 as shown in Figure 3.

C. Put the transducer at TP1 and move it as necessary to get a maximum signal from the hole in leg one of the sound path. The approximate surface distance between the transducer and the hole for leg one of the sound path is 0.82 inch (20.8 mm). This distance can be different by a small quantity for transducers that are not exactly 70 degrees.

D. Slowly move the transducer from TP1 to TP2. The approximate surface distance between TP2 and the near edge of the hole is given in Figure 3. This distance can be different for transducers that are not exactly 70 degrees.

NOTE: When the transducer is moved to the TP2 location, it is possible for signals to occur from the couplant on the reference standard that is between the transducer and the hole. If necessary, remove that couplant.

E. Adjust the instrument controls to set the initial pulse at 0% of full screen width (FSW) and the maximum signal from the hole at 70% of FSW. See Detail I in Figure 3.

F. Slowly turn the transducer in the direction of the through notch (the TP3 location). See that the signal from the notch comes into view to the right of the signal from the hole and increases in FSH as the signal from the hole decreases in FSH. This signal will occur at approximately 75 percent of FSW. See Detail II in Figure 3.

G. With the transducer at TP3, adjust the gain to set the maximum signal from the through notch to 80 percent of FSH as shown in Detail II in Figure 3. Do not move the transducer to or away from the notch when you do this.

H. Add 12 dB. Make a record of the instrument gain that is used.

5. **Inspection Procedure**

NOTE: (1) This inspection looks for cracks that are fully through the web flange of the lower chord at the rear spar. A maximum signal from the hole is not necessary to do this inspection.

NOTE: (2) The web thickness changes at different locations in the inspection area and can be different for different airplanes. The reference standard thickness is the usual thickness for all inspection areas.

A. Identify the inspection area shown in Figure 1 and identify a location to start the inspection.

BOEING PROPRIETARY - Copyright © Unpublished Work - See title page for details

B. Make sure the instrument is calibrated as specified in Paragraph 4.

C. Put couplant on the web flange of the lower chord of the rear spar.

D. Put the transducer on the lower chord, adjacent to the fastener hole location to be examined, and move the transducer as necessary to get a signal from the fastener hole. This signal can occur between 15 and 95% of FSW. The position where the fastener hole signal occurs on the screen display is a function of the distance between the transducer and the applicable fastener, and the thickness of the lower chord at that location.

NOTE: (1) If you cannot easily see the signal from the fastener hole, add gain as necessary to set the signal to approximately 30 percent of FSH.

NOTE: (2) It will be necessary to move the transducer around the fasteners in the transducer inspection areas to examine the fastener locations in the inspection area. At each fastener location, try to keep the transducer as perpendicular to the possible crack location as you can.

E. Slowly turn the transducer as necessary to point the sound beam to the side of the fastener hole that is nearest the transducer. Carefully monitor the signal from the hole as you do this. If there is a crack, the signal from the crack will come into view to the right of the hole signal and increase in FSH as the signal from the hole decreases in FSH. Turn the transducer until the hole signal decreases to 0 percent of FSH. If a crack signal occurs, then move the transducer as necessary to get a maximum crack signal.

NOTE: The location where a crack signal occurs in relation to the hole signal will be different for different diameter fasteners. As the fastener diameter decreases, the distance between the hole and the possible crack signals will also decrease. You can see this occur if you examine the small hole in the reference standard.

F. Put the transducer at the best location on the lower chord and examine the opposite side of this same fastener hole. Get a maximum signal from the hole and slowly turn the transducer as necessary to point it to the side of the fastener hole that is nearest the transducer. Carefully monitor the signal from the hole as you do this. Turn the transducer until the hole signal decreases to 0 percent of FSH. If a crack signal occurs, then move the transducer as necessary to get a maximum signal from the crack.

NOTE: It is acceptable to do a lateral scan at all fastener locations where there is sufficient space to do this. See flagnote 2 in Figure 1.

G. Do Paragraph 5.C. thru Paragraph 5.F. again to examine all applicable fastener locations.

NOTE: Do a check of the instrument calibration every 30 minutes and after the inspection is completed. If the sensitivity has changed, calibrate the instrument again and do the inspection at all areas examined since the last calibration check.

H. Do Paragraph 5.C. thru Paragraph 5.G. at all inspection areas identified in Figure 1 on the left and right wings.

I. Go to Paragraph 6. for instructions to help make an analysis of all possible crack signals that are 40 percent or more of FSH. Possible crack signals are those signals that occur to the right of the hole signal and are almost the same as the notch signals that occur on the reference standards.

BOEING PROPRIETARY - Copyright © Unpublished Work - See title page for details

6. **Inspection Results**

A. A signal that is 40 percent or more of FSH that occurs to the right of the hole signal and increases in FSH as the signal from the hole starts to decrease in FSH (or immediately after it decreases to zero percent of FSH) is a possible crack signal. It is necessary to do more analysis of these signals. Go to Paragraph 6.B. and continue to make an analysis of these possible crack signals.

NOTE: It is very possible that cracks that are smaller than the reference notch will have a signal that is less than 40 percent of FSH. Thus, make a careful record of all possible cracks that are less than 40 percent of FSH to refer to during the subsequent inspection interval.

B. Identify if the crack signal is caused by couplant on the part surface as follows:

(1) Get a maximum signal from the possible crack and keep the transducer at that location.

(2) Remove all couplant that is between the front of the transducer and the inspection area.

(3) If the signal goes away, no more analysis is necessary. If the signal continues to stay, go to Paragraph 6.C. and continue to make an analysis of the possible crack signal.

C. Compare the possible crack signal to the signal that you get from the notch in the reference standard. Because the reference standard thickness will be different from the thickness of the lower chord, you can only compare how the possible crack signal occurs in relation to the hole signal.

D. Remove the fastener and do an open hole eddy current inspection as specified in Part 6, 51-00-00, Procedure 16 to make sure there is a crack.

BOEING PROPRIETARY - Copyright © Unpublished Work - See title page for details

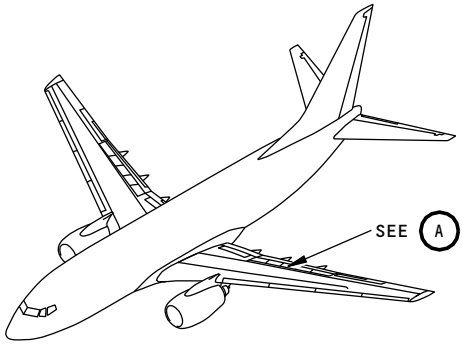

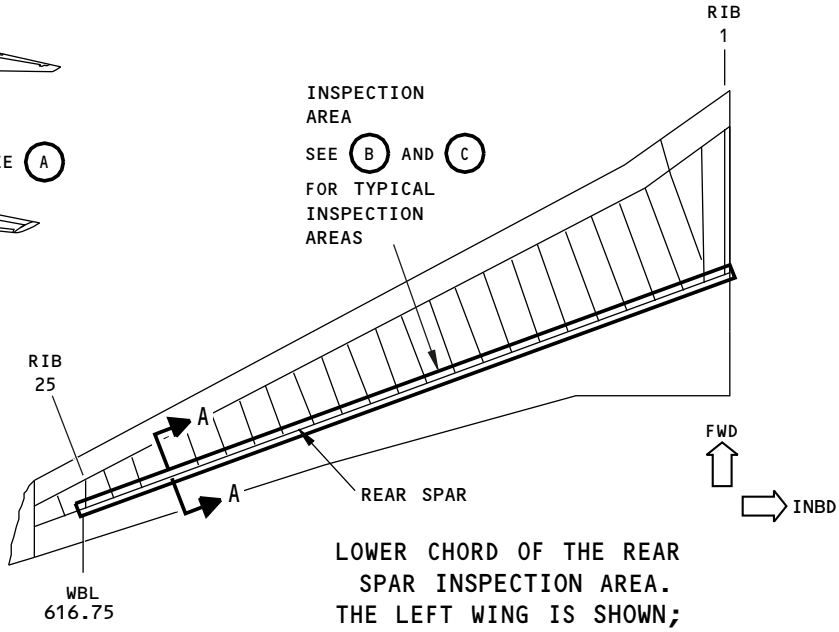

LOWER CHORD OF THE REAR SPAR INSPECTION AREA. THE LEFT WING IS SHOWN; THE RIGHT WING IS OPPOSITE

A

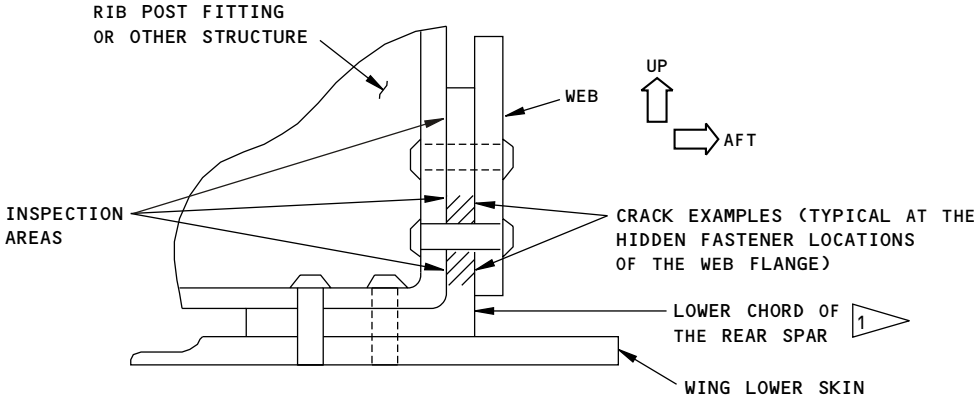

A–A

NOTES:

- SEALANT REMOVAL IS NECESSARY WHERE THE TRANSDUCER MUST TOUCH THE PART SURFACE.

1 EXAMINE THE WEB FLANGE (VERTICAL FLANGE) OF THE LOWER CHORD FOR CRACKS AT THE FASTENER LOCATIONS THAT ARE HIDDEN BY STIFFENERS, RIB POSTS, AND FITTINGS FROM RIB 1 TO RIB 25.

2175733 S0000478211_V1

Inspection Areas
Figure 1 (Sheet 1 of 2)

BOEING PROPRIETARY - Copyright © Unpublished Work - See title page for details

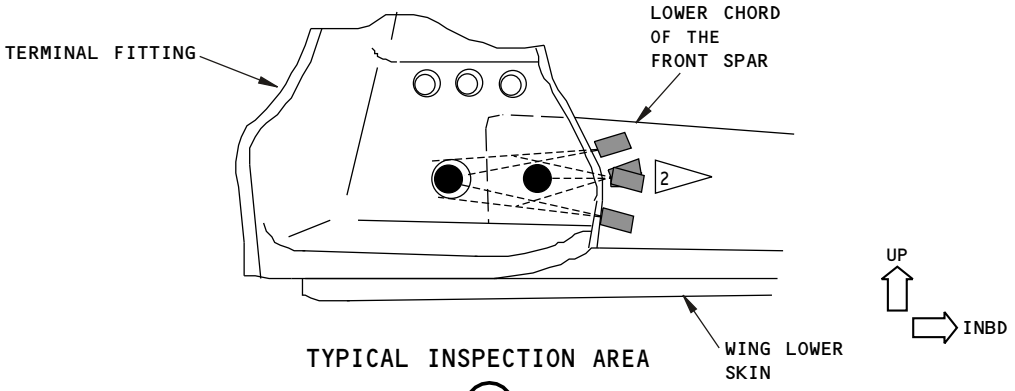

TYPICAL INSPECTION AREA

B

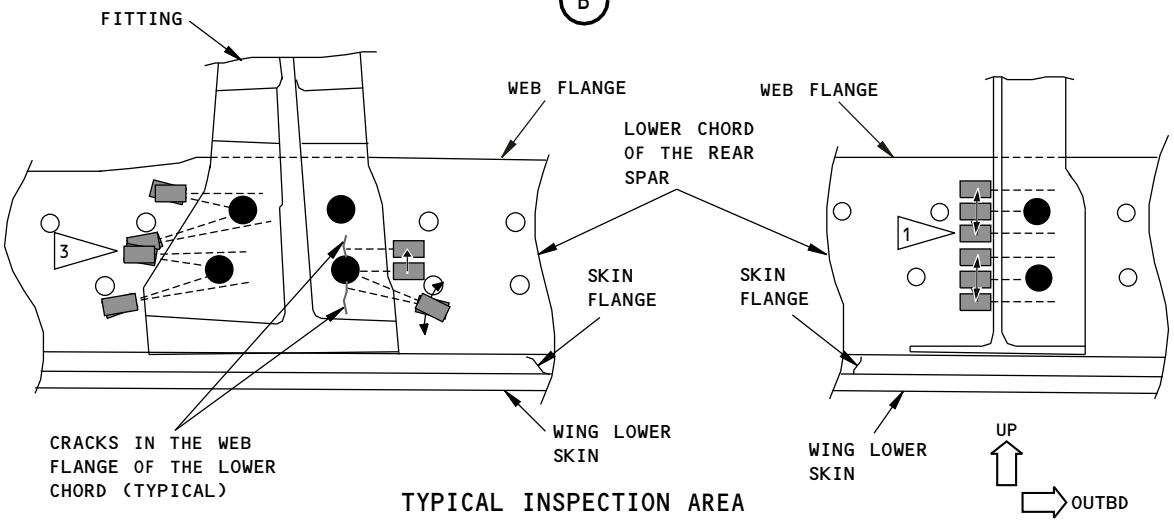

TYPICAL INSPECTION AREA

C

NOTES:

● EXAMPLE OF THE FASTENER LOCATIONS TO EXAMINE

- THE LEFT WING IS SHOWN; THE RIGHT WING IS OPPOSITE.
- THE EXAMPLES ABOVE SHOW HOW TO EXAMINE THE HIDDEN FASTENER LOCATIONS THAT ARE IN THE INSPECTION AREAS. ALL OF THE FASTENER LOCATIONS THAT MUST BE EXAMINED ARE NOT SHOWN.
- REMOVE SEALANT ONLY AS NECESSARY TO FULLY EXAMINE EACH APPLICABLE FASTENER LOCATION. APPLY NEW SEALANT AT ALL LOCATIONS WHERE SEALANT WAS REMOVED FOR THIS INSPECTION.
- CRACKS ARE CALCULATED TO GROW IN THE UP AND DOWN DIRECTION.

2 IT IS ACCEPTABLE TO DO A LATERAL SCAN AT ALL FASTENER LOCATIONS WHERE THERE IS SUFFICIENT SPACE TO DO THIS.

3 BE SURE TO ALIGN THE TRANSDUCER PERPENDICULAR TO THE DIRECTION THAT CRACKS CAN GROW. DO NOT ALIGN THE TRANSDUCER TO ADJACENT STRUCTURE UNLESS IT IS PARALLEL TO THE DIRECTION THAT CRACKS CAN GROW.

INSPECTION DETAILS FOR THE WEB FLANGE INSPECTIONS OF THE LOWER CHORD OF THE FRONT SPAR

2175738 S0000478212_V2

Inspection Areas
Figure 1 (Sheet 2 of 2)

BOEING PROPRIETARY - Copyright © Unpublished Work - See title page for details

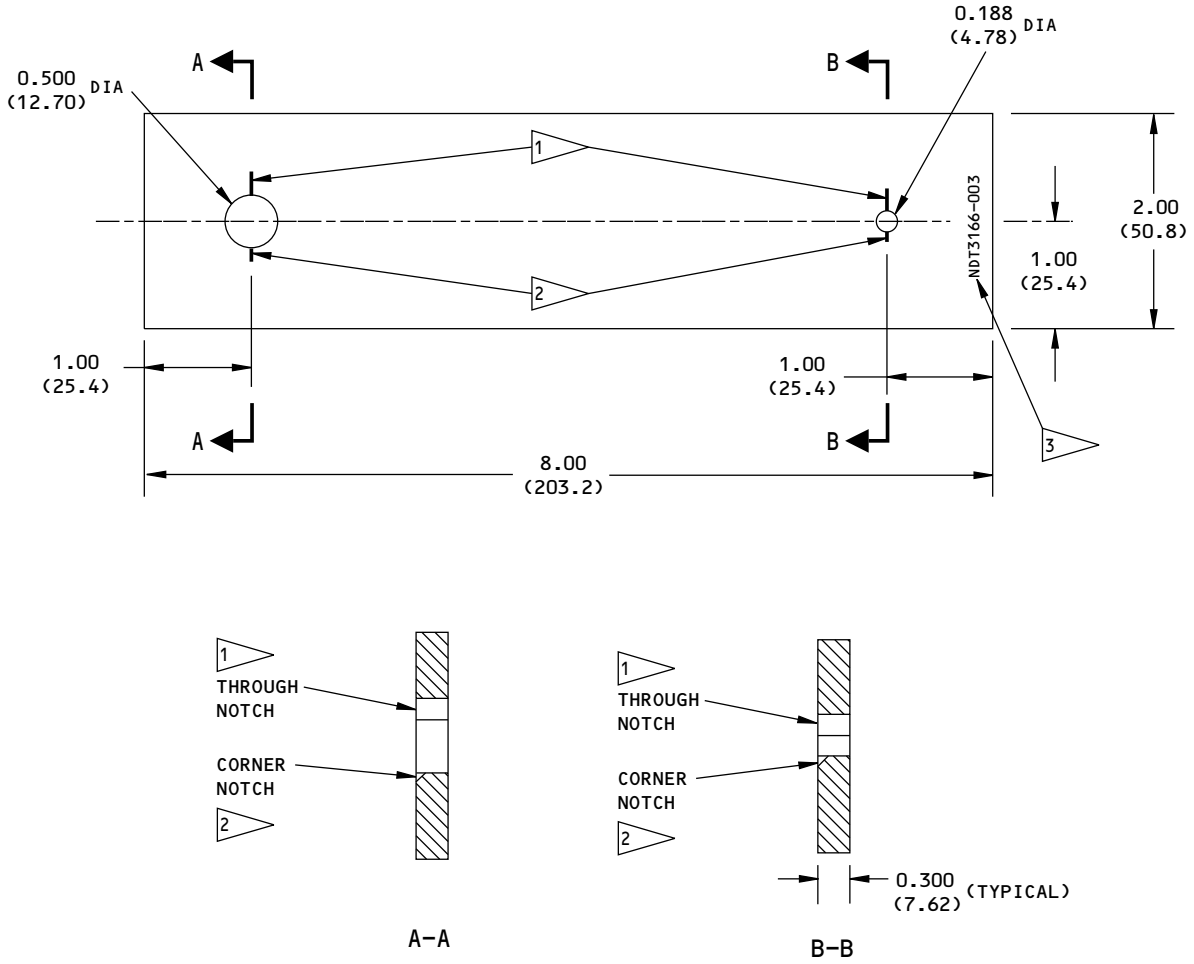

NOTES:

- ALL DIMENSIONS ARE IN INCHES (MILLIMETERS ARE IN PARENTHESES)
- TOLERANCE (UNLESS SPECIFIED DIFFERENTLY):

INCHES	MILLIMETERS	ANGULAR
X.XXX = ±0.005	X.XX = ±0.10	± 1°
X.XX = ±0.025	X.X = ±0.5	
X.X = ±0.050	X = ±1	

- MATERIAL: AIRPLANE QUALITY ALUMINUM SUCH AS 2024, 7075-T6
- SURFACE ROUGHNESS: 125 Ra OR BETTER

1 EDM THROUGH NOTCH: 0.200 (5.08) X 0.007 (0.18) WIDE ±0.003 (0.08)

2 EDM CORNER NOTCH: 0.100 (2.54) X 0.100 (2.54) X 0.007 (0.18) WIDE ±0.003 (0.08)

3 ETCH OR STAMP THE REFERENCE STANDARD NUMBER, NDT3166-003, AT APPROXIMATELY THIS LOCATION.

2175740 S0000478214_V1

Reference Standard NDT3166-003
Figure 2

BOEING PROPRIETARY - Copyright © Unpublished Work - See title page for details

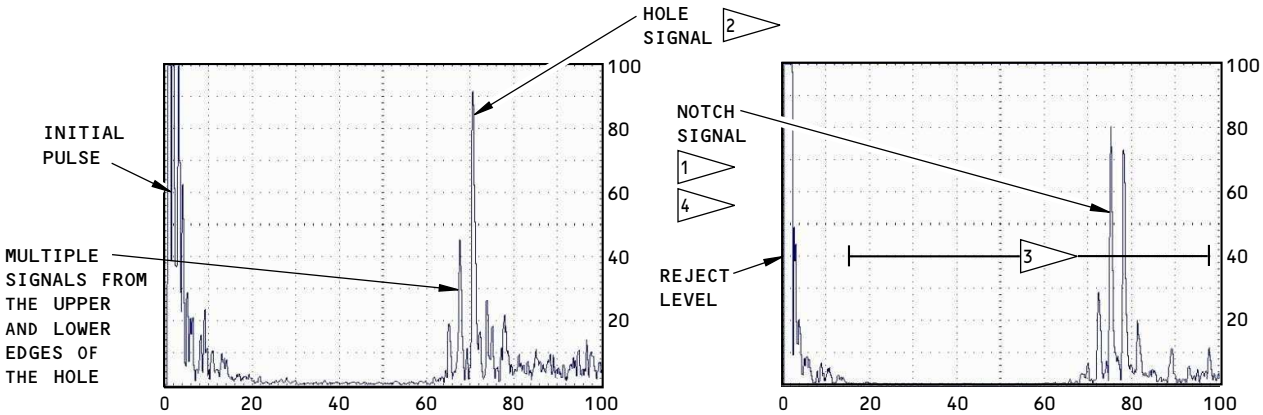

SIGNAL FROM THE HOLE WITH THE TRANSDUCER AT POSITION TP1
DETAIL I

SIGNAL FROM THE NOTCH WITH THE TRANSDUCER AT POSITION TP2
DETAIL II

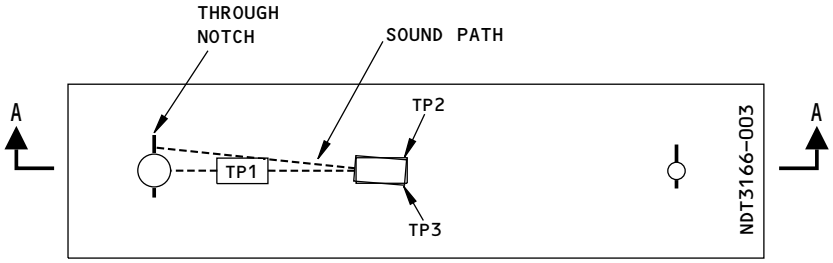

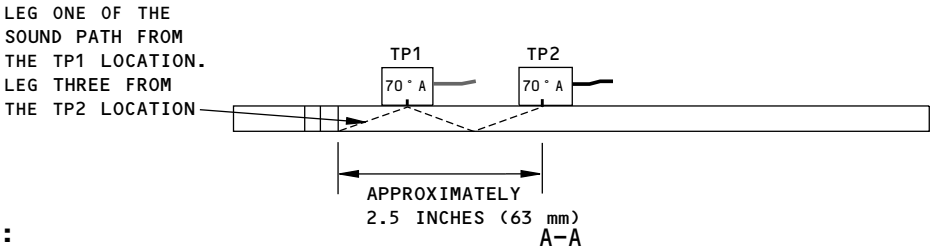

A–A

NOTES:

- TP = TRANSDUCER POSITION

1 SEE HOW AND WHERE THE NOTCH SIGNAL OCCURS ON THE SCREEN IN RELATION TO THE HOLE SIGNAL.

2 BECAUSE THE THICKNESS OF THE WEB IS DIFFERENT AT SOME INSPECTION AREAS, THE FSW LOCATION OF THE FASTENER HOLE SIGNALS WILL ALSO BE DIFFERENT.

3 LOCATION WHERE THE FASTENER HOLE AND CRACK SIGNALS CAN OCCUR. SIGNALS ABOVE 40% OF FSH THAT OCCUR TO THE RIGHT OF THE HOLE SIGNAL ARE POSSIBLE CRACK SIGNALS AND MORE ANALYSIS IS NECESSARY.

4 THE LOCATION WHERE A CRACK SIGNAL OCCURS IN RELATION TO THE HOLE SIGNAL WILL BE DIFFERENT FOR DIFFERENT DIAMETER FASTENERS. AS THE FASTENER DIAMETER DECREASES, THE DISTANCE BETWEEN THE HOLE AND THE NOTCH SIGNALS WILL DECREASE. YOU CAN SEE THIS OCCUR IF YOU EXAMINE THE SMALL HOLE IN THE REFERENCE STANDARD.

2175745 S0000478215_V2

Inspection Calibration
Figure 3

BOEING PROPRIETARY - Copyright © Unpublished Work - See title page for details

PART 4 - ULTRASONIC

UPPER AND LOWER SKINS AT THE INTERSECTION OF THE FRONT AND REAR SPARS OF THE WINGS WITH THE SIDE-OF-BODY SPLICES AT BBL 70.85

1. Purpose

A. Use this procedure to examine the upper and lower skins for cracks at the intersection of the front and rear spars of the wings with the side-of-body splice joints at BBL 70.85. See Figure 1 for the inspection areas.

B. Examine the outer and center section wing skins for cracks that can occur at the fastener locations where the lower splice plates and the upper rib chord attach to the front and rear spar chords. Examine the fastener locations at the inspection areas that follow:

(1) The four fastener locations at the front spar of the wing and the upper splice joint as shown in Figure 1, View C.

(2) The eight fastener locations at the rear spar of the wing and the upper splice joint as shown in Figure 1, View D.

(3) The four fastener locations at the front spar of the wing and the lower splice joint as shown in Figure 1, View E.

(4) The four fastener locations at the rear spar of the wing and the lower splice joint as shown in Figure 1, View F.

C. This procedure uses two 5 MHz transducers that cause a 70 degree shear wave in aluminum to examine all of the inspection areas. One transducer has an element dimension of 0.375 inch (9.52 mm), identified as T1, and the other transducer has an element dimension of 0.250 inch (6.35 mm), identified as T2. Figure 1 identifies the applicable transducer and where to put it.

D. This procedure uses two reference standards to examine all 737-600/-700/-800/-900 airplanes. Use the reference standards that follow:

(1) Use reference standard NDT3186 to examine the inspection areas identified in Figure 1, Views C, D and E.

(2) Use reference standard NDT3187 to examine the inspection areas identified in Figure 1, View F.

E. 737 Maintenance Planning Document (MPD) Damage Tolerance Rating (DTR) Check Form Reference:

(1) Item: 57-10-20

(2) Item: 57-10-21

2. Equipment

A. General

(1) Use ultrasonic equipment that can be calibrated on the reference standards specified in Paragraph 4.

(2) Refer to Part 1, 51-01-00, for data about the equipment manufacturers.

B. Instrument - Use an ultrasonic instrument that:

(1) Operates in the frequency range of 4 to 6 MHz.

(2) Can be calibrated as specified in the calibration instructions of this procedure. The instruments that follow were used to help prepare this procedure.

(a) Sonic 1200; Staveley Instruments, Inc.

BOEING PROPRIETARY - Copyright © Unpublished Work - See title page for details

(b) USM Go; GE inspection Technologies

C. Transducers - Use the 5 MHz, 70 degree in aluminum transducers that follow:

(1) Use a transducer that has a 0.375 inch (9.53 mm) element dimension and a side (rear) mounted connector. The case must not be more than 1.0 inch (25 mm) long, 0.50 inch (12.7 mm) wide or 0.70 inch (17.8 mm) in height. The transducer that follows was used to help prepare this procedure.

(a) LA-705S (side-mount); Techna NDT

(2) Use a transducer that has a 0.250 inch (6.35 mm) element dimension and a top mounted connector. The case must not be more than 0.40 inch (10.2 mm) long or 0.40 inch (10.2 mm) wide. The transducer that follows was used to help prepare this procedure.

(a) TEK-5558/70T (top mount); Techna NDT

D. Reference Standards - Use the reference standards that follow:

(1) Use reference standard NDT3186 to examine the inspection areas identified in Figure 1, Views C, D and E. See Figure 2 for the reference standard drawing.

(2) Use reference standard NDT3187 to examine the inspection areas identified in Figure 1, View F. See Figure 3 for the reference standard drawing.

E. Transducer Adapter - It is recommended to use an adapter (extension with a flexible shaft and a straight connector) with transducer 2 (T2) shown in Figure 1, View E. It is not easy to hold the transducer and get access to the area where transducer T2 is used. The transducer adapter that follows was used to help prepare this procedure.

(1) MFLX-6 (6 inches (152 mm) length); Techna NDT

F. Couplant - Use an ultrasonic couplant that will not damage the airplane structure.

3. Prepare for the Inspection

A. Remove the wing-to-body fairings at BBL 70.85, above and below the wings on the left and right sides of the airplane, to get access to the inspection areas on the outside of the airplane. Remove the necessary interior floor panels above the upper skins of the center section and wings to get access to the inspection areas on the inside of the airplane. See Figure 1 for the inspection areas.

B. Identify, clean, and, if necessary, remove sealant from all the inspection surfaces where the transducer will travel. See Figure 1, Views C thru F for the transducer positions. If the surface is rough, make it smooth by approved procedures. It is not necessary to remove paint unless it is loose.

4. Instrument Calibration

A. Three calibrations are necessary to examine all the inspection areas shown in Figure 1, Views C thru F. The paragraphs that follow give the instructions for the three calibrations.

(1) To examine all the fastener locations shown in Figure 1, Views C and D, and the fastener locations shown in View E for the lower skin of the outer wing, calibrate the instrument as follows:

(a) Connect the transducer specified in Paragraph 2.C.(1) to the instrument.

(b) Set the instrument frequency between 4 and 6 MHz, if a broadband instrument is not used.

(c) Put a sufficient quantity of couplant on reference standard NDT3186 at TP1 and TP2. See Detail I in Figure 4.

(d) Put the transducer at TP1 with the sound beam pointed at the hole. See Detail I in Figure 4.

1) Make sure the front of the transducer is on the scribe line and that the sound beam is pointed in the direction of the hole.

BOEING PROPRIETARY - Copyright © Unpublished Work - See title page for details

2) Adjust the instrument gain, delay and range controls as necessary to get a signal from the hole to occur on the screen display.

3) Move and turn the transducer along the scribe line as necessary to get a maximum signal from the hole.

(e) Adjust the instrument delay and range controls to get the signal from the hole set to 70% of full screen width (FSW) with the initial pulse set to 0%. See the screen display in Detail II in Figure 4.

(f) Slowly move the transducer to TP2 with the sound beam pointed at the notch and monitor the signal from the notch. Make sure the front of the transducer is always on the scribe line. See Detail I in Figure 4.

1) The notch signal will come into view and increase in height a short distance to the right of the hole signal as the transducer is moved away from the hole.

2) Move the transducer along the scribe line, away from the hole, to get the maximum signal from the notch. Adjust the instrument gain to get the notch signal to 80% of full screen height (FSH). Record the gain; this gain will be used during the inspection. See the screen display in Detail II in Figure 4.

NOTE: Do not use reject.

3) Monitor the distance the transducer moves from the hole to where the maximum signal height from the notch was found.

4) Move the transducer back to TP2 and continue to move it to the opposite side of the hole until the signal is gone. Monitor the distance the transducer is moved from TP2 to where the signal is gone.

(g) Put a sufficient quantity of couplant on the reference standard at TP3 and TP4. See Detail I in Figure 4.

(h) Put the transducer at TP3 with the sound beam pointed in the direction of the hole. See Detail I in Figure 4.

1) Make sure the front of the transducer is on the scribe line and that the sound beam is pointed in the direction of the hole.

2) Move and turn the transducer along the scribe line as necessary to get a maximum signal from the hole. Do not adjust the instrument gain.

(i) Monitor the screen display to make sure that the signal from the hole occurs at approximately 30% of FSW. See the screen display in Detail III in Figure 4.

(j) Slowly move the transducer to TP4 with the sound beam pointed at the notch. Make sure the front of the transducer is always on the scribe line. See Detail I in Figure 4.

(k) The notch signal will come into view and increase in height a short distance to the right of the hole signal as the transducer is moved away from the hole. The notch signal at TP4 is not used for calibration; it is used only as a reference to show the location of a possible crack signal. See the screen display in Detail III in Figure 4.

(l) Monitor the distance the transducer moves from the hole to where the maximum signal height from the notch was found.

(m) Move the transducer back to TP3 and continue to move it to the opposite side of the hole until the signal is gone. Monitor the distance the transducer is moved from TP3 to where the signal is gone.

(n) Record or, if possible, save this calibration setup for use to examine the inspection areas with this transducer.

BOEING PROPRIETARY - Copyright © Unpublished Work - See title page for details

(2) To examine the fastener locations in the lower skin of the wing center section, as shown in Figure 1, View E, calibrate the instrument as follows:

(a) Connect the transducer specified in Paragraph 2.C.(2) to the instrument.

(b) Do Paragraph 4.A.(1)(b) thru Paragraph 4.A.(1)(n) again.

(3) To examine all the fastener locations shown in Figure 1, View F, calibrate the instrument as follows:

(a) Connect the transducer specified in Paragraph 2.C.(1) to the instrument.

(b) Do Paragraph 4.A.(1)(b) thru Paragraph 4.A.(1)(h) again, but use reference standard NDT3187 and Detail I thru III in Figure 5.

(c) Monitor the screen display to make sure that the signal from the hole occurs at approximately 35% of FSW. See the screen display in Detail III in Figure 5.

(d) Slowly move the transducer to TP4 with the sound beam pointed at the notch. Make sure the front of the transducer is always on the scribe line. See Detail I in Figure 5.

(e) The notch signal will come into view and increase in height a short distance to the right of the hole signal as the transducer is moved away from the hole. The notch signal at TP4 is not used for calibration; it is used only as a reference to show the location of a possible crack signal. See the screen display in Detail III in Figure 5.

(f) Monitor the distance the transducer moves from the hole to where the maximum signal height from the notch was found.

(g) Move the transducer back to TP3 and continue to move it to the opposite side of the hole until the signal is gone. Monitor the distance the transducer is moved from TP3 to where the signal is gone.

(h) Record or, if possible, save this calibration setup for use to examine the inspection areas with this transducer.

5. Inspection Procedure

A. Examine all the fastener locations shown in Figure 1, Views C and D, and the fastener locations in the lower skin of the outer wing, shown in View E, as follows:

(1) Calibrate the instrument as specified in Paragraph 4.A.(1).

(2) Put a sufficient quantity of couplant on the transducer inspection surfaces. See Figure 1.

(3) Increase the gain 12 dB above that set Paragraph 4.A.(1)(f)2).

(4) Put the transducer on the inspection surface with the front of the transducer against the lower splice plate, the upper rib chord, or the edge of the skin pad up area as shown in Figure 1, Views C, D and E.

(5) Point the transducer to a fastener hole to be examined to get a signal from the hole to occur on the screen display. The minimum height of this hole signal must be 20% of FSH at the screen locations that follow. Add more gain if the hole signal is below 20% of FSH.

(a) The signal from the fastener hole that is nearest to the transducer must occur between 30 and 50% of FSW.

(b) The signal from the fastener hole that is farthest from the transducer must occur between 60 and 80% of FSW.

(6) Make a scan on each side of the fastener hole as follows (see Figure 1, flagnote 1, for the typical crack direction from the fastener holes):

BOEING PROPRIETARY - Copyright © Unpublished Work - See title page for details

(a) Move and/or turn the transducer along the edge of the lower splice plate, the upper rib chord, or the edge of the skin pad up area in the forward and aft directions, away from the hole. Also move the transducer away from these edges in the inboard or outboard directions as much as 0.5 inches (13 mm) if possible.

NOTE: Make sure the transducer is not above a skin fastener.

(b) As you move the transducer away from the hole, monitor the screen display for a possible crack signal to occur at the screen locations that follow:

1) Monitor the screen display between 30 and 50% of FSW for a signal from the fastener hole that is nearest to the transducer.

2) Monitor the screen display between 60 and 80% of FSW for a signal from the fastener hole that is farthest from the transducer.

3) Monitor the screen display between 90 and 100% of FSW for a signal from an edge of the skin.

(c) The signal from the fastener hole will decrease quickly as the transducer is turned away. Look for a signal to occur immediately to the right of the hole signal as you move and/or turn the transducer away from the hole.

(d) Carefully monitor the direction and position of the transducer at all times to help identify signals that occur.

NOTE: Compare the distance the transducer was moved from the fastener hole during calibration with the distance the transducer is moved during the inspection to help identify possible cracks.

(7) Do Paragraph 5.A.(4) thru Paragraph 5.A.(6) again to examine all the other fastener holes.

(8) Go to Paragraph 6. for instructions to help make an analysis of all possible crack signals that occur.

B. Examine the fastener locations at the lower skin of the wing center section, shown in Figure 1, View E, as follows:

(1) Calibrate the instrument as specified in Paragraph 4.A.(2).

(2) Put a sufficient quantity of couplant on the transducer inspection surfaces. See Figure 1.

(3) Increase the gain 12 dB above that set in Paragraph 4.A.(1)(f)2).

(4) Connect a transducer adapter (as specified in Paragraph 2.E.) to the transducer.

(5) Put the transducer on the inspection surface at with the front of the transducer against the lower splice plate as shown Figure 1, View E.

(6) Point the transducer to a fastener hole to be examined to get a signal from the hole to occur on the screen display. The minimum height of this hole signal must be 20% of FSH at the screen locations that follow. Add more gain if the hole signal is below 20% of FSH.

(a) The signal from the fastener hole that is nearest to the transducer must occur between 30 and 50% of FSW.

(b) The signal from the fastener hole that is farthest from the transducer must occur between 60 and 80% of FSW.

(7) Make a scan on each side of the fastener hole as follows (see Figure 1, flagnote 1, for the typical crack direction from the fastener holes):

BOEING PROPRIETARY - Copyright © Unpublished Work - See title page for details

(a) Move and/or turn the transducer along the edge of the lower splice plate in the forward and aft directions, away from the hole. Also move the transducer away from the edge of the lower splice plate in the inboard or outboard directions as much as 0.5 inches (13 mm) if possible.

NOTE: Make sure the transducer is not above a skin fastener.

(b) As you move the transducer away from the hole, monitor the screen display for a possible crack signal to occur at the screen locations that follow:

1) Monitor the screen display between 30 and 50% of FSW for a signal from the fastener hole that is nearest to the transducer.

2) Monitor the screen display between 60 and 80% of FSW for a signal from the fastener hole that is farthest from the transducer.

3) Monitor the screen display between 90 and 100% of FSW for a signal from an edge of the skin.

(c) The signal from the fastener hole will decrease quickly as the transducer is turned away. Look for a signal that will occur immediately to the right of the hole signal as you move and/or turn the transducer.

(d) Carefully monitor the direction and position of the transducer at all times to help identify signals that occur.

NOTE: Compare the distance the transducer was moved from the fastener hole during calibration with the distance the transducer is moved during the inspection to help identify possible cracks.

(8) Do Paragraph 5.B.(5) thru Paragraph 5.B.(7) again to examine the other fastener holes for cracks.

(9) Go to Paragraph 6. for instructions to help make an analysis of all possible crack signals that occur.

C. Examine all the fastener locations shown in Figure 1, View F, as follows:

(1) Calibrate the instrument as specified in Paragraph 4.A.(3).

(2) Put a sufficient quantity of couplant on the transducer inspection surfaces. See Figure 1.

(3) Increase the gain 12 dB above that set in Paragraph 4.A.(1)(f)2).

(4) Put the transducer on the inspection surface with the front of the transducer against the lower splice plate or the edge of the skin pad up area, as applicable, as shown in Figure 1, View F.

(5) Point the transducer to a fastener hole to be examined to get a signal from the hole to occur on the screen display. The minimum height of this hole signal must be 20% of FSH at the screen locations that follow. Add more gain if the hole signal is below 20% of FSH.

(a) The signal from the fastener hole that is nearest to the transducer must occur between 30 and 60% of FSW.

(b) The signal from the fastener hole that is farthest from the transducer must occur between 60 and 90% of FSW.

(6) Make a scan on each side of the fastener hole as follows (see Figure 1, flagnote 1, for the typical crack direction from the fastener holes):

BOEING PROPRIETARY - Copyright © Unpublished Work - See title page for details

(a) Move and/or turn the transducer along the edge of the lower splice plate or the edge of the skin pad up area in the forward and aft directions, away from the hole. Also move the transducer away from these edges in the inboard or outboard directions as much as 0.5 inches (13 mm) if possible.

NOTE: Make sure the transducer is not above a skin fastener.

(b) As you move the transducer away from the hole, monitor the screen display for a possible crack signal to occur at the screen locations that follow:

1) Monitor the screen display between 30 and 60% of FSW for a signal from the fastener hole that is nearest to the transducer.

2) Monitor the screen display between 60 and 90% of FSW for a signal from the fastener hole that is farthest from the transducer.

(c) The signal from the fastener hole will decrease quickly as the transducer is turned away. Look for a signal to occur immediately to the right of the hole signal as you move and/or turn the transducer.

(d) Carefully monitor the direction and position of the transducer at all times to help identify signals that occur.

NOTE: Compare the distance the transducer was moved from the fastener hole during calibration with the distance the transducer is moved during the inspection to help identify possible cracks.

(7) Do Paragraph 5.C.(4) thru Paragraph 5.C.(6) again to examine all the other fastener holes for cracks.

(8) Go to Paragraph 6. for instructions to help make an analysis of all possible crack signals that occur.

6. Inspection Results

A. For the inspections done at the fastener locations shown in Figure 1, Views C, D and E.

(1) A signal that is 40% of FSH or more (with the added 12 dB) and between 30 and 50% of FSW for the fastener hole that is nearest to the transducer and between 60 and 80% of FSW for the fastener hole that is farthest from the transducer, is a sign of a crack.

B. For the inspections done at the fastener locations shown in Figure 1, View F.

(1) A signal that is 40% of FSH or more (with the added 12 dB) and between 30 and 60% of FSW for the fastener hole that is nearest to the transducer and between 60 and 90% of FSW for the fastener hole that is farthest from the transducer, is a sign of a crack.

C. Compare all possible cracks signals to the signal that you get from the notch in the reference standard. Use the same transducer distance from the fastener hole to the notch signal that was found during calibration when a possible crack occurs.

D. Make sure the possible crack signal is not caused by too much couplant in front of the transducer.

E. Do a check of the instrument calibration to make sure the sensitivity has not changed. If the sensitivity has changed, calibrate the instrument again and do the inspection at the locations that cause signals to occur that are 40% of FSH or more.

F. At fastener holes where possible crack signals occur that are less than 40% of FSH, try to turn and move the transducer to get the signal height to increase. This is only possible where there is sufficient access. Make a careful record of all possible cracks that are less than 40% of FSH and report this to your engineering group.

BOEING PROPRIETARY - Copyright © Unpublished Work - See title page for details

G. For possible crack signals that are 40% of FSH or more, remove the fastener and do an open hole eddy current inspection as specified in Part 6, 51-00-00, Procedure 16 to make sure there is a crack.

BOEING PROPRIETARY - Copyright © Unpublished Work - See title page for details

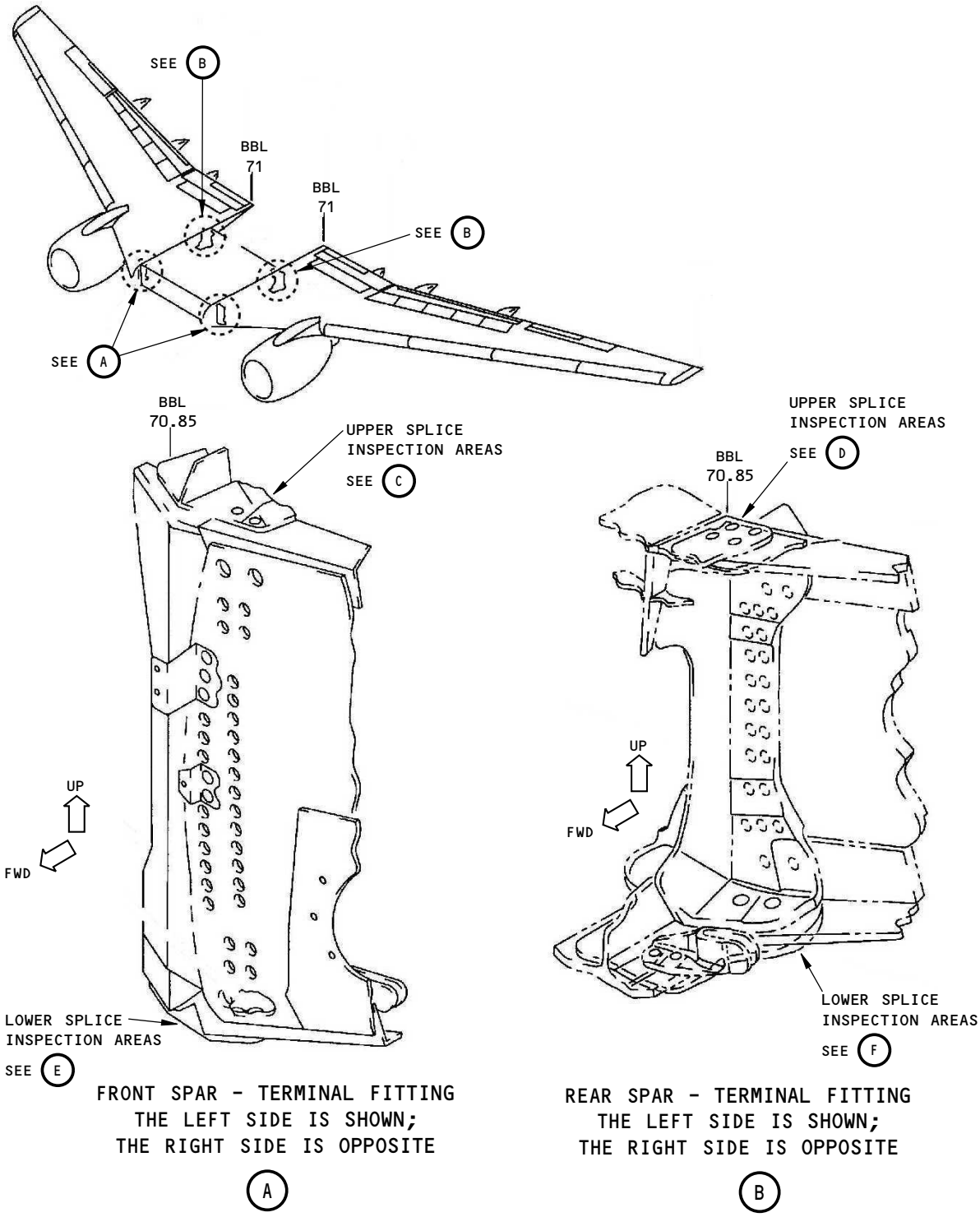

Inspection Areas
Figure 1 (Sheet 1 of 3)

BOEING PROPRIETARY - Copyright © Unpublished Work - See title page for details

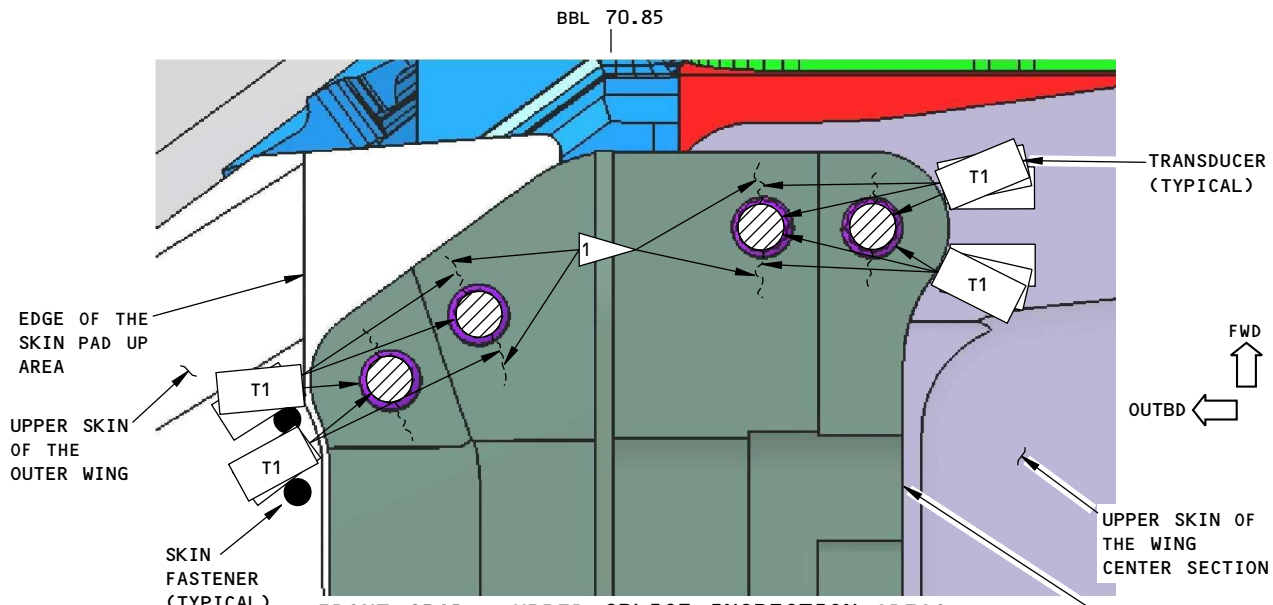

FRONT SPAR - UPPER SPLICE INSPECTION AREAS

C

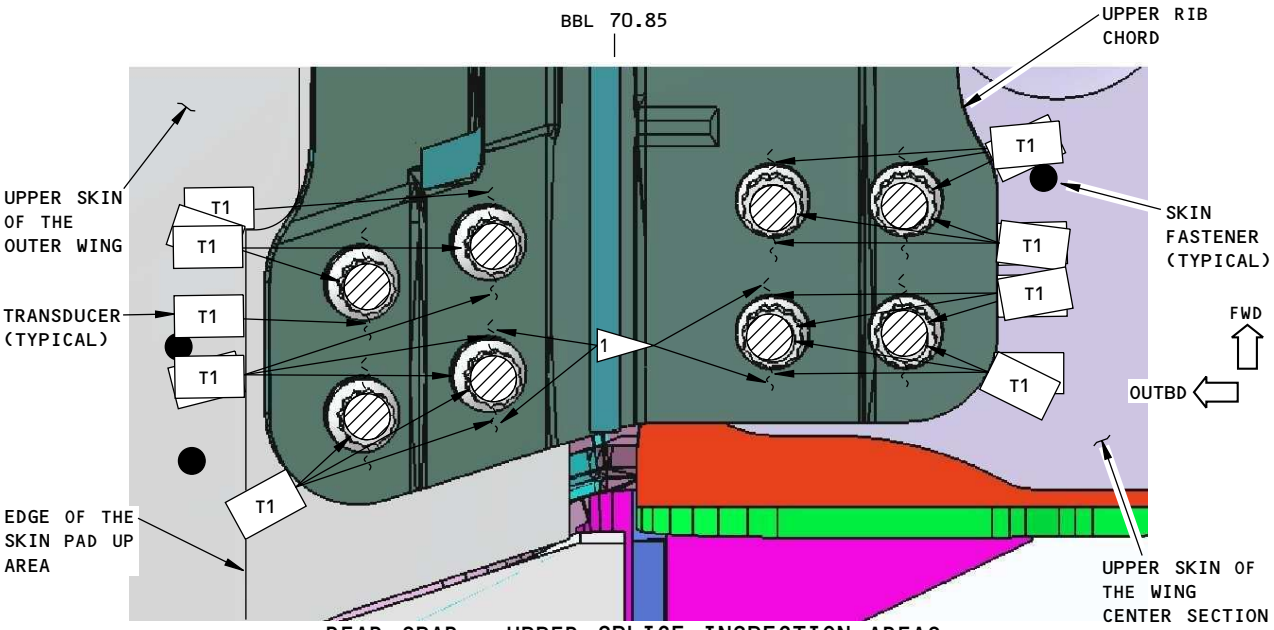

REAR SPAR - UPPER SPLICE INSPECTION AREAS

D

NOTES:

FASTENER LOCATIONS TO EXAMINE.

1 TYPICAL CRACK THAT CAN OCCUR IN THE WING SKINS AT THE FORWARD AND AFT SIDES OF THE FASTENER HOLE

- TO EXAMINE ALL THE FASTENER LOCATIONS SHOWN IN VIEWS C AND D, AND THE FASTENER LOCATIONS IN THE LOWER SKIN OF THE OUTER WING, SHOWN IN VIEW E, CALIBRATE THE INSTRUMENT AS SPECIFIED IN PARAGRAPH 4.A.(1) AND FIGURE 4.

2175772 S0000478473_V2

Inspection Areas
Figure 1 (Sheet 2 of 3)

BOEING PROPRIETARY - Copyright © Unpublished Work - See title page for details

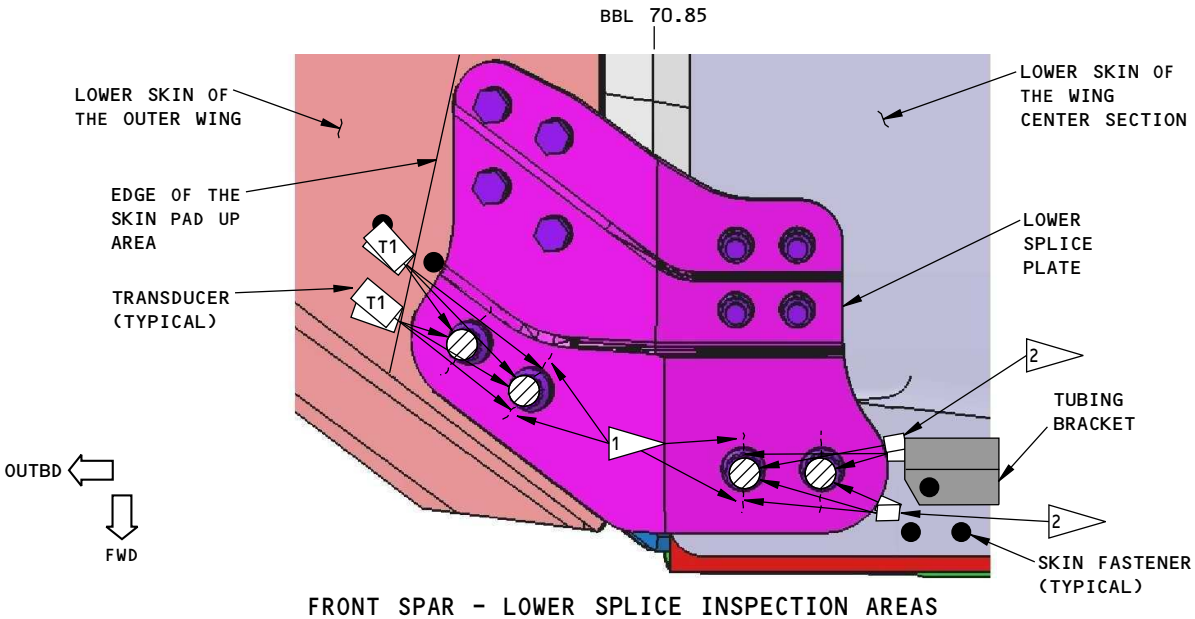

FRONT SPAR - LOWER SPLICE INSPECTION AREAS

E

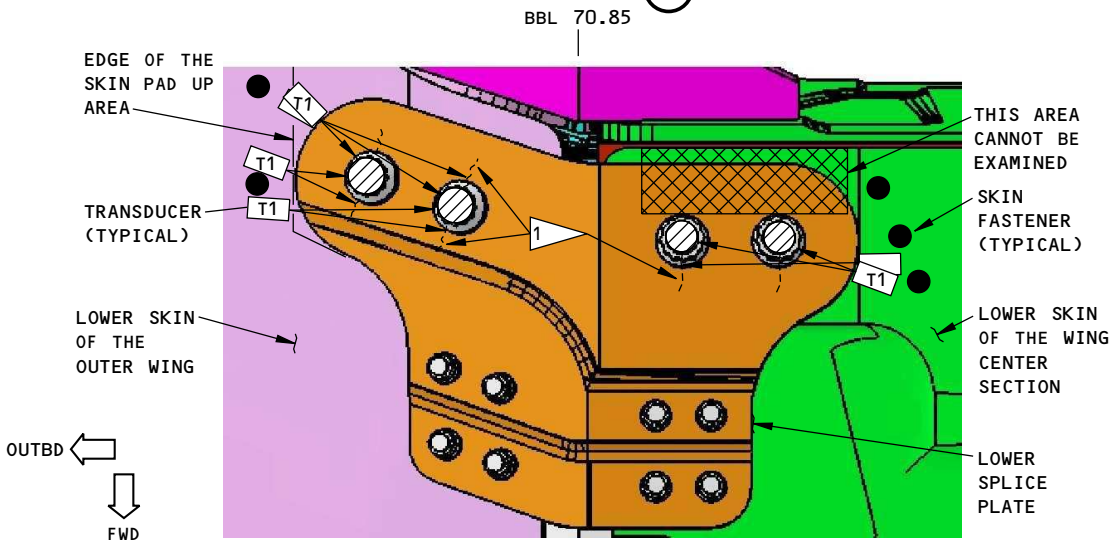

REAR SPAR - LOWER SPLICE INSPECTION AREAS

F

NOTES:

- TO EXAMINE THE FASTENER LOCATIONS AT THE LOWER SKIN OF THE WING CENTER SECTION, SHOWN IN VIEW E, CALIBRATE THE INSTRUMENT AS SPECIFIED IN PARAGRAPH 4.A.(2) AND FIGURE 4.
- TO EXAMINE ALL THE FASTENER LOCATIONS AS SHOWN IN VIEW F, CALIBRATE THE INSTRUMENT AS SPECIFIED IN PARAGRAPH 4.A.(3) AND FIGURE 5.

2 USE TRANSDUCER T2 UNDER THE TUBING BRACKET. IT IS RECOMMENDED TO USE A STRAIGHT TRANSDUCER ADAPTER TO HELP HOLD THE TRANSDUCER AS YOU MAKE A SCAN.

2175792 S0000478474_V2

Inspection Areas
Figure 1 (Sheet 3 of 3)

BOEING PROPRIETARY - Copyright © Unpublished Work - See title page for details

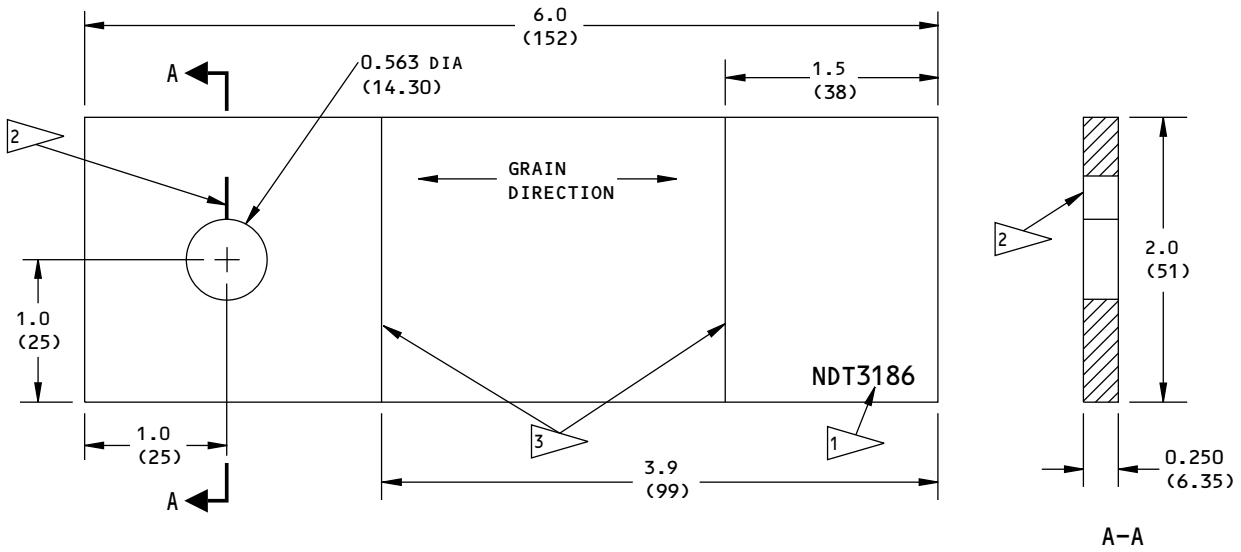

NOTES:

- ALL DIMENSIONS ARE IN INCHES (MILLIMETERS ARE IN PARENTHESES)
- TOLERANCE (UNLESS SPECIFIED DIFFERENTLY):

INCHES	MILLIMETERS
X.XXX = ±0.010	X.XX = ±0.2
X.XX = ±0.025	X.X = ±0.5
X.X = ±0.050	X = ±1

- MATERIAL: AIRCRAFT QUALITY ALUMINUM
- SURFACE ROUGHNESS: 63 Ra OR BETTER

1 ETCH, ENGRAVE OR STAMP THE REFERENCE STANDARD NUMBER, NDT3186, AT APPROXIMATELY THIS LOCATION

2 EDM NOTCH LOCATION AND TOLERANCE: THE NOTCH MUST BE WITHIN ±0.005 (0.10) OF THE CENTERLINE OF THE HOLE AS SHOWN.

NOTCH DIMENSIONS AND TOLERANCE:
WIDTH: 0.010 (0.3) ±0.002 (0.05)
LENGTH: 0.300 (7.62)
DEPTH: FULL PART THICKNESS

3 ETCH OR SCRIBE A LINE TO IDENTIFY THE TRANSDUCER POSITION FOR THE INSTRUMENT CALIBRATION.

2175793 S0000478475_V1

Reference Standard NDT3186
Figure 2

BOEING PROPRIETARY - Copyright © Unpublished Work - See title page for details

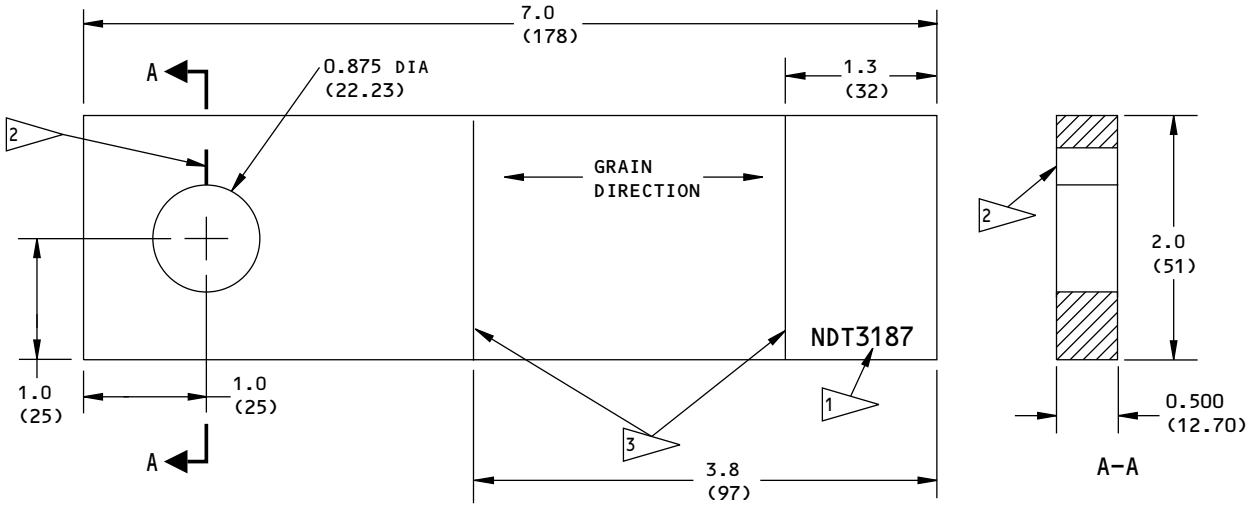

NOTES:

- ALL DIMENSIONS ARE IN INCHES (MILLIMETERS ARE IN PARENTHESES)
- TOLERANCE (UNLESS SPECIFIED DIFFERENTLY):

INCHES	MILLIMETERS
X.XXX = ±0.010	X.XX = ±0.2
X.XX = ±0.025	X.X = ±0.5
X.X = ±0.050	X = ±1

- MATERIAL: AIRCRAFT QUALITY ALUMINUM
- SURFACE ROUGHNESS: 63 Ra OR BETTER

1 ETCH, ENGRAVE OR STAMP THE REFERENCE STANDARD NUMBER, NDT3187, AT APPROXIMATELY THIS LOCATION

2 EDM NOTCH LOCATION AND TOLERANCE: THE NOTCH MUST BE WITHIN ±0.005 (0.10) OF THE CENTERLINE OF THE HOLE AS SHOWN.

NOTCH DIMENSIONS AND TOLERANCE:
WIDTH: 0.010 (0.3) ±0.002 (0.05)
LENGTH: 0.300 (7.62)
DEPTH: FULL PART THICKNESS

3 ETCH OR SCRIBE A LINE TO IDENTIFY THE TRANSDUCER POSITION FOR THE INSTRUMENT CALIBRATION.

2175794 S0000478476_V1

Reference Standard NDT3187
Figure 3

BOEING PROPRIETARY - Copyright © Unpublished Work - See title page for details

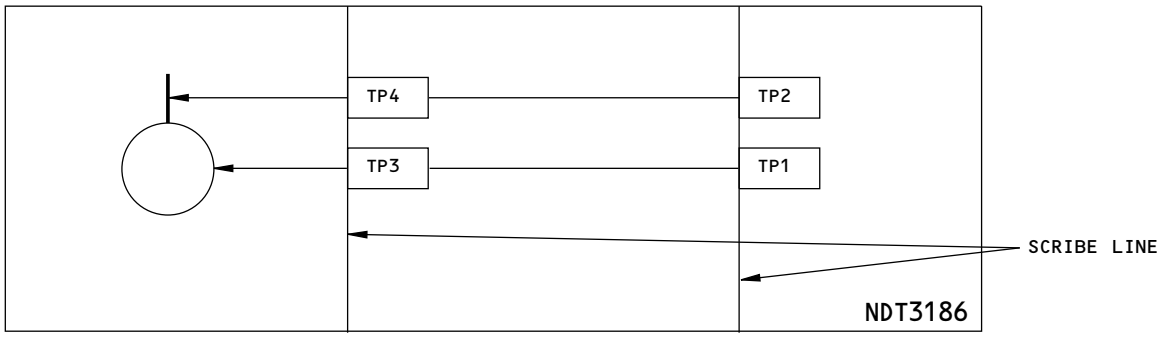

TRANSDUCER LOCATIONS ON
REFERENCE STANDARD NDT3186
DETAIL I

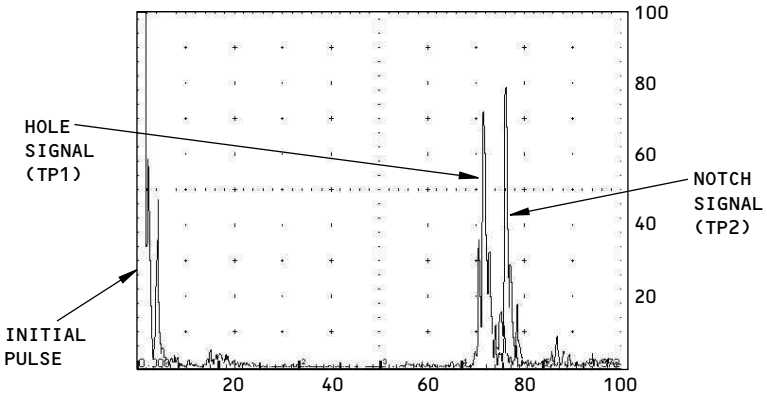

HOLE SIGNAL (TP1) AND
NOTCH SIGNAL (TP2)
DETAIL II

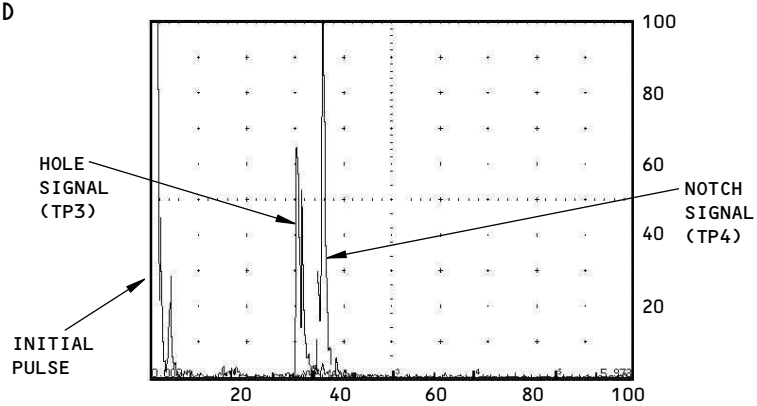

HOLE SIGNAL (TP3) AND
NOTCH SIGNAL (TP4)
DETAIL III

NOTES:

- TP = TRANSDUCER POSITION
- THE SCREEN DISPLAYS IN DETAILS II AND III SHOW THE NOTCH SIGNAL WITH THE HOLE SIGNAL TO SHOW THE TYPICAL SEPARATION BETWEEN THE TWO SIGNALS. THE SIGNALS CAN LOOK DIFFERENT WITH OTHER INSTRUMENT AND TRANSDUCER MIXES.

2175796 S0000478477_V1

Instrument Calibration on Reference Standard NDT3186
Figure 4

BOEING PROPRIETARY - Copyright © Unpublished Work - See title page for details

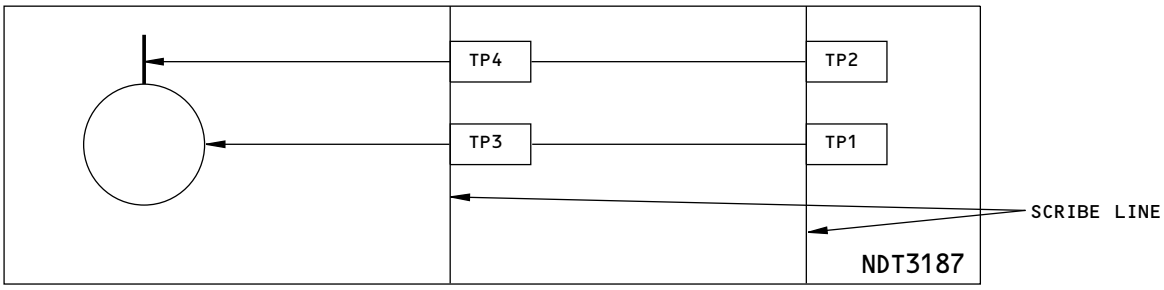

TRANSDUCER LOCATIONS ON
REFERENCE STANDARD NDT3187

DETAIL I

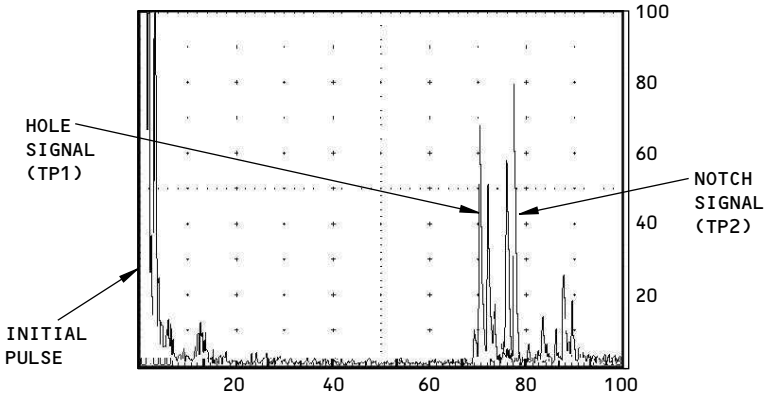

HOLE SIGNAL (TP1) AND
NOTCH SIGNAL (TP2)

DETAIL II

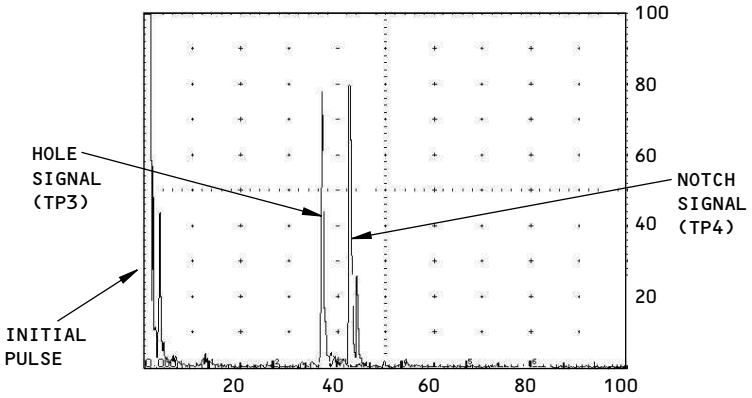

HOLE SIGNAL (TP3) AND
NOTCH SIGNAL (TP4)

DETAIL III

NOTES:

- TP = TRANSDUCER POSITION
- THE SCREEN DISPLAYS IN DETAILS II AND III SHOW THE NOTCH SIGNAL WITH THE HOLE SIGNAL TO SHOW THE TYPICAL SEPARATION BETWEEN THE TWO SIGNALS. THE SIGNALS CAN LOOK DIFFERENT WITH OTHER INSTRUMENT AND TRANSDUCER MIXES.

2175797 S0000478478_V1

Instrument Calibration on Reference Standard NDT3187
Figure 5

BOEING PROPRIETARY - Copyright © Unpublished Work - See title page for details

PART 4 - ULTRASONIC

SKIN FLANGE OF THE LOWER CHORD AT THE REAR SPAR OF THE WING

1. Purpose

A. Use this procedure to help find cracks in the skin flange of the lower chord at the rear spar of the wing. The skin flange of the lower chord is examined for cracks between ribs 1 and 25 at fastener locations where the lower chord is hidden by a stiffener, rib post or fitting. See Figure 1 for the inspection areas.

B. The lower chord is aluminum.

C. 737 Maintenance Planning Data (MPD) Damage Tolerance Record (DTR) Check Form Reference:

(1) Item: 57-20-05-5

2. Equipment

A. General

(1) All ultrasonic equipment that can be calibrated as specified in Paragraph 4. can be used to do this inspection.

(2) Refer to Part 1, 51-01-00, for data about the equipment manufacturers.

B. Instrument

(1) Use an ultrasonic instrument that:

(a) Operates in the pulse-echo mode.

(b) Operates in a frequency range of 4 to 6 MHz.

NOTE: Broadband instruments can be used if they can be calibrated as specified in this procedure.

(2) The instrument that follows was used to help prepare this procedure.

(a) Sonic 1200S; Olympus

C. Transducers - Use 60 degree transducers that fully touch the surface of the lower chord and can be adjusted in the inspection area. The transducers that follow were used to help prepare this procedure.

(1) LA-605T (60°A), 5 MHz; Techna NDT

(2) TEK-5557/60S (60°A), 5MHz; Techna NDT

D. Reference Standard - Use reference standard NDT3187. See Figure 2 for data about the reference standard.

E. Couplant

(1) Use an ultrasonic couplant that will not cause corrosion or other damage to the airplane.

3. Prepare for the Inspection

WARNING: PERSONNEL WHO ENTER A FUEL TANK MUST KNOW THE PRECAUTIONS AND SAFETY PROCEDURES CONTAINED IN CHAPTER 28 OF THE BOEING AIRCRAFT MAINTENANCE MANUAL. DANGEROUS FUMES AND THE POSSIBILITY OF AN EXPLOSION EXIST IN THE FUEL TANKS.

A. Identify and get access to all of the inspection areas shown in Figure 1.

BOEING PROPRIETARY - Copyright © Unpublished Work - See title page for details

B. Remove sealant as necessary to fully examine the applicable fastener holes. Clean the inspection surface if necessary.

C. If there is loose paint or paint chips, make the area smooth, as necessary, by an approved procedure that will not damage the airplane.

D. Measure and record the distance from the fastener holes to be examined to the area of the lower chord of the rear spar where the transducer will be to do the inspection. See Views B and C in Figure 1.

E. At the end of this inspection, replace all sealant that was removed.

4. Instrument Calibration

A. Set the instrument frequency to 5 MHz or to a frequency range that includes 5 MHz.

B. Put couplant and then the transducer on the reference standard at transducer position 1 (TP1), which is equal to the distance measured and recorded in Paragraph 3.C. (see Figure 3, Detail I).

C. Move the transducer as necessary to get a maximum signal from the hole.

D. Adjust the range and delay controls to set the initial pulse signal at 0% of full screen width (FSW) and the maximum signal from the hole at 50% of FSW as shown in Figure 3, Detail II.

NOTE: When you set the signals to a specified location on the instrument display, always use the front edge of the signal.

E. Slowly turn or move the transducer, as applicable, to TP2 as shown in Figure 3, Detail I, and get a maximum signal from the reference notch. The signal from the reference notch will occur to the right of the hole signal at approximately 54% of FSW. As you move the transducer from TP1 to TP2, see that the signal from the hole decreases in full screen height (FSH) as the signal from the reference notch increases in FSH.

F. Adjust the gain to set the maximum signal from the reference notch at 80% of FSH as shown in Figure 3, Detail III.

G. Add 6 dB and make a record of the total quantity of instrument gain.

5. Inspection Procedure

A. Examine the lower chord of the rear spar between ribs 1 and 25 at the fastener locations where the lower chord is hidden by a stiffener, rib post or fitting as identified in Figure 1. Do the inspection as follows:

(1) Identify the inspection areas shown in Figure 1 and identify a location to start the inspection.

(2) Make sure the instrument is calibrated as specified in Paragraph 4.

(3) Put couplant on the skin flange of the lower chord at the rear spar in the area to be examined.

(4) Put the transducer on the lower chord so that it is adjacent to the fastener hole location to be examined, and move the transducer as necessary to get a signal from the fastener hole. This signal must occur between 30 and 70% of FSW.

(a) If you cannot easily see the signal from the fastener hole, add gain as necessary to set the signal to approximately 30 percent of FSH. If you add gain, make sure that you set the instrument gain back to the quantity recorded in Paragraph 4.G. before you examine subsequent fastener holes.

(b) It will be necessary to move the transducer around the fasteners in the inspection areas to examine the fastener locations. At each fastener location, keep the transducer as perpendicular to the forward and aft direction as you can.

BOEING PROPRIETARY - Copyright © Unpublished Work - See title page for details

(5) Slowly turn or move the transducer as necessary to point the sound to the side of the fastener hole that is nearest the transducer. Carefully monitor the signal from the hole as you do this. If there is a crack, the signal from the crack will come into view to the right of the hole signal and increase in FSH as the signal from the hole decreases in FSH. Turn the transducer until the hole signal decreases to 0 percent of FSH. If a crack signal occurs, move the transducer as necessary to get a maximum crack signal.

NOTE: The location where a crack signal occurs in relation to the hole signal will be different for different diameter fastener holes. As the fastener hole diameter decreases, the distance between the hole and the possible crack signal will also decrease.

(6) Put the transducer at the best location to examine the opposite side of this same fastener hole. Get a maximum signal from the hole and slowly turn or move the transducer as necessary to point it to the side of the fastener hole that is nearest the transducer. Carefully monitor the signal from the hole as you do this. Turn or move the transducer until the hole signal decreases to 0 percent of FSH. If a crack signal occurs, move the transducer as necessary to get a maximum signal from the crack.

(7) Do Paragraph 5.A.(3) thru Paragraph 5.A.(6) again to examine all applicable fastener locations.

(a) Do a check of the instrument calibration every 30 minutes and after the inspection is completed. If the sensitivity has changed more than 10%, calibrate the instrument again and do the inspection at all areas that were examined since the last calibration check.

(8) Do Paragraph 5.A.(3) thru Paragraph 5.A.(7) again at all inspection areas identified in Figure 1 on the left and right wings.

(9) Go to Paragraph 6. for instructions to help make an analysis of all possible crack signals that are 40 percent or more of FSH. Possible crack signals are those signals that occur to the right of the hole signal and are almost the same as the notch signals that occur on the reference standards.

6. Inspection Results

A. A signal that is 40 percent or more of FSH and occurs to the right of the hole signal and increases in FSH as the signal from the hole starts to decrease in FSH is a possible crack signal. It is necessary to do more analysis of these signals. Go to Paragraph 6.B. and continue to make an analysis of these possible crack signals.

NOTE: It is possible that cracks that are smaller than the reference notch will have a signal that is less than 40 percent of FSH. Make a careful record of all crack indications that are less than 40 percent of FSH to refer to during subsequent inspections.

B. Identify if the crack signal is caused by couplant on the part surface as follows:

(1) Get a maximum signal from the possible crack and keep the transducer at that location.

(2) Remove all couplant that is between the front of the transducer and the inspection area.

(3) If the signal goes away, no more analysis is necessary. If the signal continues to stay, go to Paragraph 6.C. and continue to make an analysis of the possible crack signal.

C. Remove the fastener and do an open hole eddy current inspection as specified in Part 6, 51-00-00, Procedure 16, to make sure there is a crack.

BOEING PROPRIETARY - Copyright © Unpublished Work - See title page for details

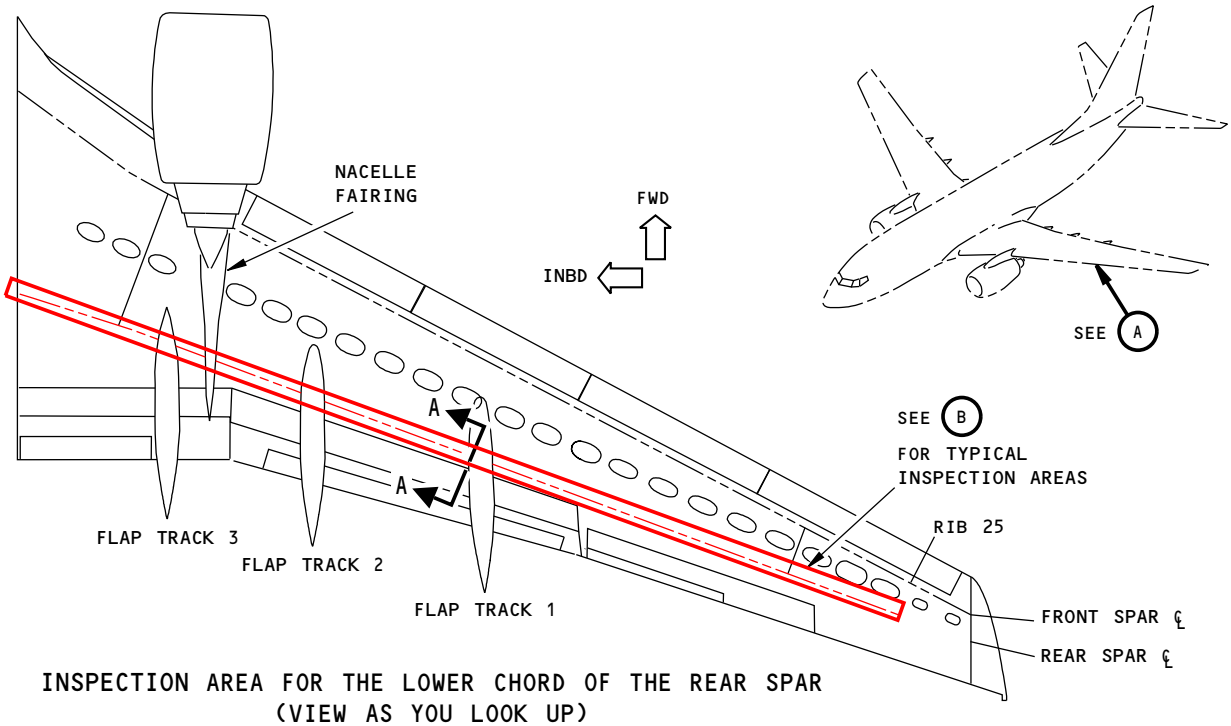

INSPECTION AREA FOR THE LOWER CHORD OF THE REAR SPAR
(VIEW AS YOU LOOK UP)
THE LEFT WING IS SHOWN; THE RIGHT WING IS OPPOSITE

A

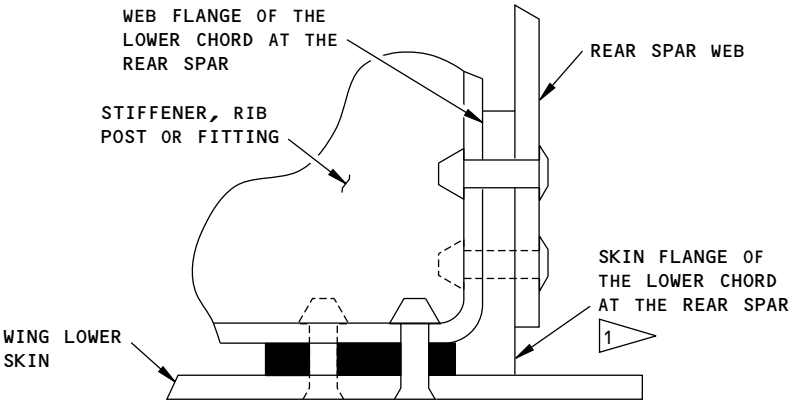

A–A

NOTES

INSPECTION AREA

- REMOVE SEALANT FROM THE LOWER CHORD SURFACES THAT THE TRANSDUCER MUST BE PUT ON

1 EXAMINE THE SKIN FLANGE (HORIZONTAL FLANGE) OF THE LOWER CHORD FOR CRACKS AT THE FASTENER LOCATIONS WHERE THE LOWER CHORD IS HIDDEN BY A STIFFENER, RIB POST OR FITTING

2315572 S0000526644_V2

Inspection Area
Figure 1 (Sheet 1 of 2)

BOEING PROPRIETARY - Copyright © Unpublished Work - See title page for details

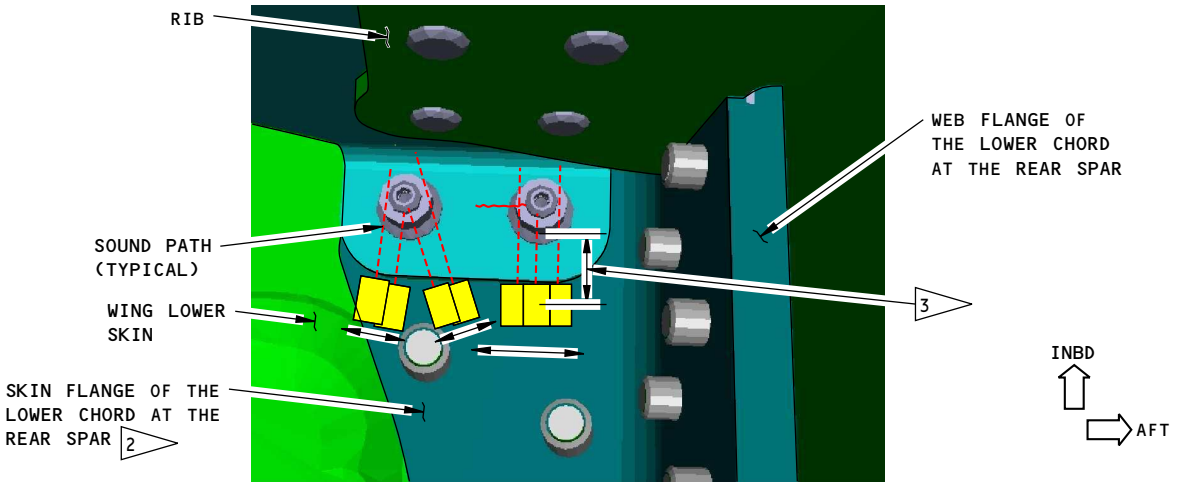

TYPICAL TRANSDUCER POSITIONS TO EXAMINE THE LOWER CHORD OF THE REAR SPAR
(VIEW FROM INSIDE THE WING AS YOU LOOK DOWN, AFT AND INBOARD)
THE LEFT WING IS SHOWN; THE RIGHT WING IS OPPOSITE

B

NOTES

TRANSDUCER

TYPICAL CRACK DIRECTION (IN THE FORWARD AND AFT DIRECTIONS)

2 EXAMINE THE SKIN FLANGE OF THE LOWER CHORD AT THE REAR SPAR FOR CRACKS AT THE FASTENER LOCATIONS WHERE THE LOWER CHORD IS HIDDEN BY A STIFFENER, RIB POST OR FITTING

3 MEASURE AND RECORD THE DISTANCE FROM THE FASTENER HOLE(S) TO THE AREA OF THE LOWER CHORD WHERE IT IS POSSIBLE TO PUT THE TRANSDUCER. USE THIS MEASURED DISTANCE DURING CALIBRATION TO SET THE INSTRUMENT SCREEN RANGE AND SENSITIVITY.

2321677 S0000526645_V1

Inspection Area
Figure 1 (Sheet 2 of 2)

BOEING PROPRIETARY - Copyright © Unpublished Work - See title page for details

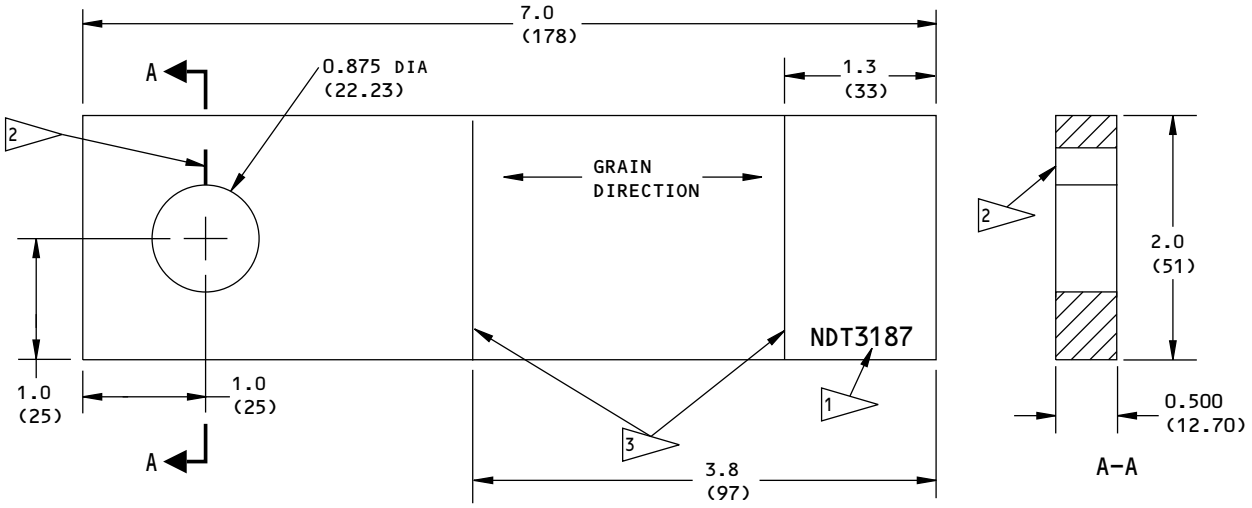

NOTES:

- ALL DIMENSIONS ARE IN INCHES (MILLIMETERS ARE IN PARENTHESES)
- TOLERANCE (UNLESS SPECIFIED DIFFERENTLY):

INCHES	MILLIMETERS
X.XXX = ±0.010	X.XX = ±0.2
X.XX = ±0.025	X.X = ±0.5
X.X = ±0.050	X = ±1

- MATERIAL: AIRCRAFT QUALITY ALUMINUM
- SURFACE ROUGHNESS: 63 Ra OR BETTER

1 ETCH, ENGRAVE OR STAMP THE REFERENCE STANDARD NUMBER, NDT3187, AT APPROXIMATELY THIS LOCATION

2 EDM NOTCH LOCATION AND TOLERANCE: THE NOTCH MUST BE WITHIN ±0.005 (0.10) OF THE CENTERLINE OF THE HOLE AS SHOWN.

NOTCH DIMENSIONS AND TOLERANCE:
WIDTH: 0.010 (0.30) ±0.002 (0.05)
LENGTH: 0.300 (7.62)
DEPTH: FULL PART THICKNESS

3 ETCH OR SCRIBE A LINE TO IDENTIFY THE TRANSDUCER POSITION FOR THE INSTRUMENT CALIBRATION.

2321683 S0000526646_V1

Reference Standard NDT3187
Figure 2

BOEING PROPRIETARY - Copyright © Unpublished Work - See title page for details

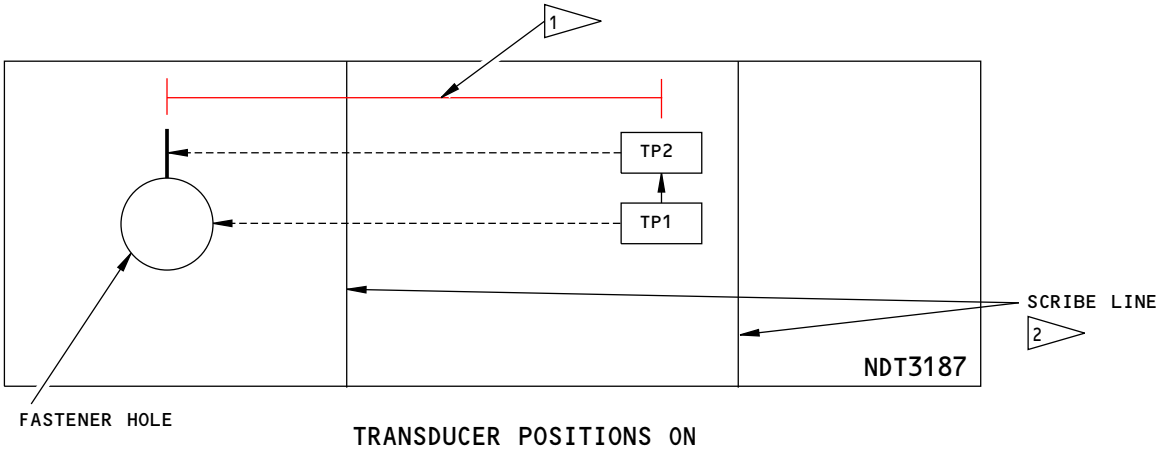

TRANSDUCER POSITIONS ON
REFERENCE STANDARD NDT3187
DETAIL I

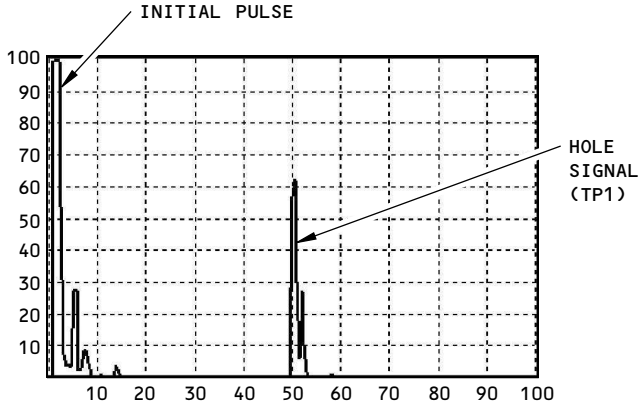

HOLE SIGNAL (TP1)
DETAIL II

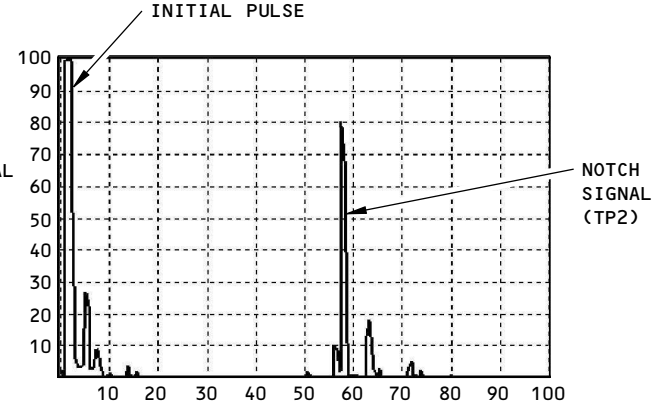

NOTCH SIGNAL (TP2)
DETAIL III

NOTES

- TP = TRANSDUCER POSITION

1 THE DISTANCE FROM THE FASTENER HOLE TO TRANSDUCER POSITIONS 1 AND 2 (TP1 AND TP2) IS THE DISTANCE RECORDED DURING PARAGRAPH 3.C AND SHOWN IN FIGURE 1 FOR THE AREA TO BE EXAMINED.

2 THE SCRIBE LINES ON THE FACE OF THE REFERENCE STANDARD ARE NOT USED FOR THE INSTRUMENT CALIBRATION OF THIS PROCEDURE

2321735 S0000526647_V1

Instrument Calibration
Figure 3

BOEING PROPRIETARY - Copyright © Unpublished Work - See title page for details