CHAPTER

72

ENGINE

CHAPTER 72
ENGINE

Subject/Page	Date	COC
72-EFFECTIVE PAGES		
1 thru 5	JUN 15/2016	
6	BLANK	
72-020-01-01	SYS	
1	Jun 15/2015	
2	Oct 15/2015	
3	Oct 15/2015	
4	Oct 15/2014	
R 5	Jun 15/2016	
R 6	Jun 15/2016	
72-020-02-01	SYS	
1	Jun 15/2015	
2	Oct 15/2015	
3	Oct 15/2015	
4	Oct 15/2014	
R 5	Jun 15/2016	
R 6	Jun 15/2016	
72-025-01-01	SYS	
1	Jun 15/2015	
2	Feb 15/2015	
3	Jun 15/2015	
4	Oct 15/2014	
R 5	Jun 15/2016	
R 6	Jun 15/2016	
R 7	Jun 15/2016	
R 8	Jun 15/2016	
72-025-02-01	SYS	
1	Jun 15/2015	
2	Feb 15/2015	
3	Jun 15/2015	
4	Oct 15/2014	
R 5	Jun 15/2016	
R 6	Jun 15/2016	
R 7	Jun 15/2016	
R 8	Jun 15/2016	
72-030-01-01	SYS	
1	Oct 15/2014	
2	Feb 15/2015	
72-030-02-01	SYS	
1	Oct 15/2014	
2	Feb 15/2015	
72-040-01-01	SYS	
1	Oct 15/2014	
2	Feb 15/2015	
72-040-02-01	SYS	
1	Oct 15/2014	
2	Feb 15/2015	
72-050-01-01	SYS	
1	Oct 15/2014	
2	Feb 15/2015	
72-050-02-01	SYS	
1	Oct 15/2014	
2	Feb 15/2015	
72-070-01-01	SYS	
1	Jun 15/2015	
R 2	Jun 15/2016	
3	Jun 15/2015	
4	Jun 15/2015	
5	Jun 15/2015	
6	Jun 15/2015	
7	Oct 15/2014	
8	Jun 15/2015	
R 9	Jun 15/2016	
R 10	Jun 15/2016	
R 11	Jun 15/2016	
R 12	Jun 15/2016	
R 13	Jun 15/2016	
R 14	Jun 15/2016	
R 15	Jun 15/2016	
R 16	Jun 15/2016	
72-070-02-01	SYS	
1	Jun 15/2015	
R 2	Jun 15/2016	
3	Jun 15/2015	
4	Jun 15/2015	
5	Jun 15/2015	
6	Jun 15/2015	
7	Oct 15/2014	
8	Jun 15/2015	
R 9	Jun 15/2016	
R 10	Jun 15/2016	
R 11	Jun 15/2016	
R 12	Jun 15/2016	
R 13	Jun 15/2016	
R 14	Jun 15/2016	
R 15	Jun 15/2016	
R 16	Jun 15/2016	
72-100-01-01	SYS	
R 1	Jun 15/2016	
2	Feb 15/2015	
R 3	Jun 15/2016	
R 4	Jun 15/2016	
5	Oct 15/2014	
R 6	Jun 15/2016	
R 7	Jun 15/2016	
72-100-02-01	SYS	
R 1	Jun 15/2016	
2	Feb 15/2015	
R 3	Jun 15/2016	
R 4	Jun 15/2016	
5	Oct 15/2014	
R 6	Jun 15/2016	
R 7	Jun 15/2016	
72-110-01-01	SYS	
1	Oct 15/2014	
2	Feb 15/2015	
3	Oct 15/2014	

A = Added, R = Revised, D = Deleted, O = Overflow, C = Customer Originated Change

72-EFFECTIVE PAGES

BOEING PROPRIETARY - Copyright © Unpublished Work - See title page for details

CHAPTER 72
ENGINE

Subject/Page	Date	COC
72-110-01-01	SYS (cont)	
R 4	Jun 15/2016	
R 5	Jun 15/2016	
72-110-02-01	SYS	
1	Oct 15/2014	
2	Feb 15/2015	
3	Oct 15/2014	
R 4	Jun 15/2016	
R 5	Jun 15/2016	
72-130-01-01	SYS	
1	Oct 15/2014	
2	Feb 15/2015	
72-130-02-01	SYS	
1	Oct 15/2014	
2	Feb 15/2015	
72-140-01-01	SYS	
1	Oct 15/2014	
2	Feb 15/2015	
72-140-02-01	SYS	
1	Oct 15/2014	
2	Feb 15/2015	
72-150-01-01	SYS	
1	Oct 15/2014	
2	Feb 15/2015	
72-150-02-01	SYS	
1	Oct 15/2014	
2	Feb 15/2015	
72-160-01-01	SYS	
1	Oct 15/2014	
2	Feb 15/2015	
72-160-02-01	SYS	
1	Oct 15/2014	
2	Feb 15/2015	
72-170-01-01	SYS	
1	Oct 15/2014	
2	Feb 15/2015	
72-170-02-01	SYS	
1	Oct 15/2014	
2	Feb 15/2015	
72-180-01-01	SYS	
R 1	Jun 15/2016	
R 2	Jun 15/2016	
3	Feb 15/2016	
4	Oct 15/2015	
R 5	Jun 15/2016	
6	Oct 15/2015	
7	Oct 15/2015	
8	Oct 15/2015	
9	Feb 15/2015	
10	Feb 15/2015	
R 11	Jun 15/2016	
O 12	Jun 15/2016	
O 13	Jun 15/2016	
R 14	Jun 15/2016	
15	Feb 15/2016	
16	Oct 15/2014	
R 17	Jun 15/2016	
R 18	Jun 15/2016	
R 19	Jun 15/2016	
R 20	Jun 15/2016	
21	Feb 15/2015	
22	Feb 15/2015	
23	Feb 15/2015	
24	Feb 15/2015	
R 25	Jun 15/2016	
R 26	Jun 15/2016	
R 27	Jun 15/2016	
R 28	Jun 15/2016	
R 29	Jun 15/2016	
R 30	Jun 15/2016	
72-180-02-01	SYS	
R 1	Jun 15/2016	
R 2	Jun 15/2016	
72-180-02-01	SYS (cont)	
3	Feb 15/2016	
4	Oct 15/2015	
R 5	Jun 15/2016	
6	Oct 15/2015	
7	Oct 15/2015	
8	Oct 15/2015	
9	Feb 15/2015	
10	Feb 15/2015	
R 11	Jun 15/2016	
O 12	Jun 15/2016	
O 13	Jun 15/2016	
R 14	Jun 15/2016	
15	Feb 15/2016	
16	Oct 15/2014	
R 17	Jun 15/2016	
R 18	Jun 15/2016	
R 19	Jun 15/2016	
R 20	Jun 15/2016	
21	Feb 15/2015	
22	Feb 15/2015	
23	Feb 15/2015	
24	Feb 15/2015	
R 25	Jun 15/2016	
R 26	Jun 15/2016	
R 27	Jun 15/2016	
R 28	Jun 15/2016	
R 29	Jun 15/2016	
R 30	Jun 15/2016	
72-200-01-01	SYS	
R 1	Jun 15/2016	
R 2	Jun 15/2016	
3	Feb 15/2016	
4	Oct 15/2015	
R 5	Jun 15/2016	
6	Oct 15/2015	
7	Feb 15/2015	

A = Added, R = Revised, D = Deleted, O = Overflow, C = Customer Originated Change

72-EFFECTIVE PAGES

BOEING PROPRIETARY - Copyright © Unpublished Work - See title page for details

CHAPTER 72
ENGINE

Subject/Page	Date	COC
72-200-01-01	SYS (cont)	
8	Feb 15/2015	
9	Feb 15/2015	
10	Feb 15/2015	
R 11	Jun 15/2016	
12	Oct 15/2014	
13	Feb 15/2016	
14	Oct 15/2014	
R 15	Jun 15/2016	
R 16	Jun 15/2016	
R 17	Jun 15/2016	
R 18	Jun 15/2016	
R 19	Jun 15/2016	
R 20	Jun 15/2016	
R 21	Jun 15/2016	
R 22	Jun 15/2016	
R 23	Jun 15/2016	
R 24	Jun 15/2016	
72-200-01-02	SYS	
R 1	Jun 15/2016	
R 2	Jun 15/2016	
3	Feb 15/2016	
4	Oct 15/2015	
R 5	Jun 15/2016	
6	Oct 15/2015	
7	Feb 15/2015	
8	Feb 15/2015	
9	Feb 15/2015	
10	Feb 15/2015	
R 11	Jun 15/2016	
12	Oct 15/2014	
13	Feb 15/2016	
14	Oct 15/2014	
R 15	Jun 15/2016	
R 16	Jun 15/2016	
R 17	Jun 15/2016	
R 18	Jun 15/2016	
72-200-01-02	SYS (cont)	
R 19	Jun 15/2016	
R 20	Jun 15/2016	
R 21	Jun 15/2016	
R 22	Jun 15/2016	
R 23	Jun 15/2016	
R 24	Jun 15/2016	
72-200-02-01	SYS	
R 1	Jun 15/2016	
R 2	Jun 15/2016	
3	Feb 15/2016	
4	Oct 15/2015	
R 5	Jun 15/2016	
6	Oct 15/2015	
7	Feb 15/2015	
8	Feb 15/2015	
9	Feb 15/2015	
10	Feb 15/2015	
R 11	Jun 15/2016	
12	Oct 15/2014	
13	Feb 15/2016	
14	Oct 15/2014	
R 15	Jun 15/2016	
R 16	Jun 15/2016	
R 17	Jun 15/2016	
R 18	Jun 15/2016	
R 19	Jun 15/2016	
R 20	Jun 15/2016	
R 21	Jun 15/2016	
R 22	Jun 15/2016	
R 23	Jun 15/2016	
R 24	Jun 15/2016	
72-200-02-02	SYS	
R 1	Jun 15/2016	
R 2	Jun 15/2016	
3	Feb 15/2016	
4	Oct 15/2015	
R 5	Jun 15/2016	
6	Oct 15/2015	
7	Feb 15/2015	
8	Feb 15/2015	
9	Feb 15/2015	
10	Feb 15/2015	
R 11	Jun 15/2016	
12	Oct 15/2014	
13	Feb 15/2016	
14	Oct 15/2014	
R 15	Jun 15/2016	
R 16	Jun 15/2016	
R 17	Jun 15/2016	
R 18	Jun 15/2016	
R 19	Jun 15/2016	
R 20	Jun 15/2016	
R 21	Jun 15/2016	
R 22	Jun 15/2016	
R 23	Jun 15/2016	
R 24	Jun 15/2016	
72-210-01-01	SYS	
R 1	Jun 15/2016	
R 2	Jun 15/2016	
3	Feb 15/2016	
4	Oct 15/2015	
R 5	Jun 15/2016	
6	Oct 15/2015	
7	Oct 15/2015	
8	Oct 15/2015	
9	Oct 15/2015	
10	Oct 15/2015	
R 11	Jun 15/2016	
O 12	Jun 15/2016	
O 13	Jun 15/2016	
O 14	Jun 15/2016	
R 15	Jun 15/2016	

A = Added, R = Revised, D = Deleted, O = Overflow, C = Customer Originated Change

72-EFFECTIVE PAGES

BOEING PROPRIETARY - Copyright © Unpublished Work - See title page for details

CHAPTER 72
ENGINE

Subject/Page	Date	COC
72-210-01-01	SYS (cont)	
R 16	Jun 15/2016	
R 17	Jun 15/2016	
R 18	Jun 15/2016	
R 19	Jun 15/2016	
R 20	Jun 15/2016	
R 21	Jun 15/2016	
R 22	Jun 15/2016	
A 23	Jun 15/2016	
72-210-02-01	SYS	
R 1	Jun 15/2016	
R 2	Jun 15/2016	
3	Feb 15/2016	
4	Oct 15/2015	
R 5	Jun 15/2016	
6	Oct 15/2015	
7	Oct 15/2015	
8	Oct 15/2015	
9	Oct 15/2015	
10	Oct 15/2015	
R 11	Jun 15/2016	
O 12	Jun 15/2016	
O 13	Jun 15/2016	
O 14	Jun 15/2016	
R 15	Jun 15/2016	
R 16	Jun 15/2016	
R 17	Jun 15/2016	
R 18	Jun 15/2016	
R 19	Jun 15/2016	
R 20	Jun 15/2016	
R 21	Jun 15/2016	
R 22	Jun 15/2016	
A 23	Jun 15/2016	
72-220-01-01	SYS	
1	Oct 15/2014	
2	Feb 15/2015	
72-220-02-01	SYS	
1	Oct 15/2014	
2	Feb 15/2015	
72-230-01-01	SYS	
1	Oct 15/2014	
2	Feb 15/2015	
72-230-02-01	SYS	
1	Oct 15/2014	
2	Feb 15/2015	
72-240-01-01	SYS	
1	Oct 15/2014	
2	Feb 15/2015	
72-240-02-01	SYS	
1	Oct 15/2014	
2	Feb 15/2015	
72-250-01-01	SYS	
1	Oct 15/2014	
2	Feb 15/2015	
72-250-02-01	SYS	
1	Oct 15/2014	
2	Feb 15/2015	
72-270-01-01	SYS	
1	Oct 15/2014	
2	Feb 15/2015	
72-270-02-01	SYS	
1	Oct 15/2014	
2	Feb 15/2015	
72-280-01-01	SYS	
1	Oct 15/2014	
2	Feb 15/2015	
72-280-02-01	SYS	
1	Oct 15/2014	
2	Feb 15/2015	
72-290-01-01	SYS	
1	Oct 15/2014	
2	Feb 15/2015	
72-290-02-01	SYS	
1	Oct 15/2014	
2	Feb 15/2015	
72-300-01-01	SYS	
1	Oct 15/2014	
2	Feb 15/2015	
3	Oct 15/2014	
R 4	Jun 15/2016	
R 5	Jun 15/2016	
72-300-02-01	SYS	
1	Oct 15/2014	
2	Feb 15/2015	
3	Oct 15/2014	
R 4	Jun 15/2016	
R 5	Jun 15/2016	
72-320-01-01	SYS	
1	Jun 15/2015	
2	Feb 15/2016	
3	Feb 15/2016	
4	Feb 15/2016	
R 5	Jun 15/2016	
6	Feb 15/2016	
7	Feb 15/2016	
8	Feb 15/2016	
9	Feb 15/2016	
10	Feb 15/2016	
11	Feb 15/2016	
12	Feb 15/2016	
13	Feb 15/2016	
14	Feb 15/2016	
15	Feb 15/2016	
R 16	Jun 15/2016	
R 17	Jun 15/2016	
R 18	Jun 15/2016	
R 19	Jun 15/2016	

A = Added, R = Revised, D = Deleted, O = Overflow, C = Customer Originated Change

72-EFFECTIVE PAGES

BOEING PROPRIETARY - Copyright © Unpublished Work - See title page for details

CHAPTER 72
ENGINE

Subject/Page		Date	COC	Subject/Page		Date	COC	Subject/Page		Date	COC
72-320-02-01		SYS									
	1	Jun 15/2015									
	2	Feb 15/2016									
	3	Feb 15/2016									
	4	Feb 15/2016									
R	5	Jun 15/2016									
	6	Feb 15/2016									
	7	Feb 15/2016									
	8	Feb 15/2016									
	9	Feb 15/2016									
	10	Feb 15/2016									
	11	Feb 15/2016									
	12	Feb 15/2016									
	13	Feb 15/2016									
	14	Feb 15/2016									
	15	Feb 15/2016									
R	16	Jun 15/2016									
R	17	Jun 15/2016									
R	18	Jun 15/2016									
R	19	Jun 15/2016									

A = Added, R = Revised, D = Deleted, O = Overflow, C = Customer Originated Change

72-EFFECTIVE PAGES

BOEING PROPRIETARY - Copyright © Unpublished Work - See title page for details

AIRLINE CARD NO		TITLE			BOEING CARD NO.
		LEFT ENGINE INLET AND FAN BLADES			72-020-01-01
DATE	TASK				RELATED CARD
	INSPECTION - DETAILED				
TAIL NUMBER	WORK AREA	VERSION	THRESHOLD	REPEAT	APPLICABILITY
	LEFT ENGINE	1.1	2500 FH	2500 FH	AIRPLANE: ALL / ENGINE: ALL
STATION	SKILL				
	AIRPL				
		ACCESS			ZONE
					411

Detailed inspection of left engine inlet and fan blades.

A. References

Reference	Title
AMM 72-21-01-000-801-F00	Spinner Cones Removal (P/B 401)
AMM 72-21-01-200-801-F00	Spinner Cone and Retaining Flange Inspection (P/B 601)
AMM 72-21-01-400-801-F00	Spinner Cones Installation (P/B 401)
AMM 72-21-02-000-802-F00	Fan Blade Replacement (Blade Pair) (P/B 401)
AMM 72-21-02-200-801-F00	Fan Module Inspection (P/B 601)
AMM 72-24-01-200-801-F00	Fan Inlet Case Inspection (Detail) (P/B 601)
AMM 72-24-02-200-801-F00	Abradable Shroud (Detail) Inspection (P/B 601)
AMM 72-24-02-200-802-F00	Local Recondition of the Abradable Shroud (P/B 801)

B. Tools/Equipment

NOTE: When more than one tool part number is listed under the same "Reference" number, the tools shown are alternates to each other within the same airplane series. Tool part numbers that are replaced or non-procurable are preceded by "Opt:", which stands for Optional.

Reference	Description
STD-585	Mat - Protective, 3/8 Inch (9.5 mm) Minimum Thickness, Minimum 42x60 Inches (1x1.5 meters) with Warning Streamers

BOEING PROPRIETARY - Copyright © Unpublished Work - See title page for details

DATE	TAIL NUMBER	STATION	AIRLINE CARD NO.	BOEING CARD NO.
				72-020-01-01

MECH	INSP

TASK 72-21-00-220-801-F00

1. **Engine Inlet and Fan Blades Inspection (Detail)**
(Figure 1, Figure 2)

A. General

(1) This task is a scheduled maintenance task which examines the inside of the engine inlet.

(2) The visual check is for the two part spinner, fan blades, and inside surfaces of the fan inlet case and related components.

B. Prepare For the Inspection

SUBTASK 72-21-00-040-001-F00

(1) For engine 1, do this step:

Open this circuit breaker and install safety tag:

CAPT Electrical System Panel, P18-2

Row	Col	Number	Name
B	8	C01103	ENGINE 1 START VALVE

SUBTASK 72-21-00-040-004-F00

(2) For engine 2, do this step:

Open this circuit breaker and install safety tag:

F/O Electrical System Panel, P6-2

Row	Col	Number	Name
C	4	C00154	ENGINE 2 START VALVE

SUBTASK 72-21-00-040-002-F00

(3) Make sure the start levers are in the CUTOFF position.

(a) Install a DO-NOT-OPERATE tag on the applicable start lever.

SUBTASK 72-21-00-480-001-F00

CAUTION: MAKE SURE YOU INSTALL THE PROTECTIVE MATS IN THE INLET COWL. THIS WILL PREVENT DAMAGE FROM TOOLS, PARTS OR UNWANTED MATERIAL THAT FALL ON THE INLET COWL.

(4) Install a protective mat, STD-585 in the inlet cowl.

C. Visually Examine the Spinner Front Cone

SUBTASK 72-21-00-210-002-F00

(1) Examine the exposed area of the spinner front cone for damage (AMM TASK 72-21-01-200-801-F00).

SUBTASK 72-21-00-210-010-F00

(2) If you find damage to the spinner front cone that is more than the limits, replace the spinner front cone, unless you are given other instructions.

These are the tasks:

Spinner Cones Removal, AMM TASK 72-21-01-000-801-F00,

Spinner Cones Installation, AMM TASK 72-21-01-400-801-F00.

BOEING PROPRIETARY - Copyright © Unpublished Work - See title page for details

DATE	TAIL NUMBER	STATION	AIRLINE CARD NO.	BOEING CARD NO.
				72-020-01-01

MECH	INSP

D. Visually Examine the Spinner Rear Cone

SUBTASK 72-21-00-210-004-F00

(1) Examine the exposed areas of the spinner rear cone for damage (AMM TASK 72-21-01-200-801-F00).

SUBTASK 72-21-00-210-011-F00

(2) If you find damage to the spinner rear cone that is more than the limits, replace the spinner rear cone, unless you are given other instructions.

These are the tasks:

Spinner Cones Removal, AMM TASK 72-21-01-000-801-F00,

Spinner Cones Installation, AMM TASK 72-21-01-400-801-F00.

E. Visually Examine the Fan Blades

SUBTASK 72-21-00-220-002-F00

WARNING: MAKE SURE YOU WEAR GLOVES WHEN YOU HANDLE THE FAN BLADES. IF YOU DO NOT WEAR GLOVES WHEN YOU HANDLE THE FAN BLADES, YOU CAN INJURE YOUR HANDS.

(1) Do a visual check of the exposed areas of the fan blades (AMM TASK 72-21-02-200-801-F00).

SUBTASK 72-21-00-210-012-F00

(2) If you find damage to the fan blade that is more than the limits, replace the fan blade, unless you are given other instructions. To replace it, do this task: Fan Blade Replacement (Blade Pair), AMM TASK 72-21-02-000-802-F00.

F. Visually Examine the Abradable Shroud

SUBTASK 72-21-00-210-008-F00

(1) Do a visual check of the abradable shroud for damage (AMM TASK 72-24-02-200-801-F00).

SUBTASK 72-21-00-300-001-F00

(2) If you find damage that is more than these limits, do this task: Local Recondition of the Abradable Shroud, AMM TASK 72-24-02-200-802-F00, unless you are given other instructions.

G. Visually Examine the Fan Inlet Case

SUBTASK 72-21-00-210-009-F00

(1) Do a visual check of the exposed areas of the fan inlet case for damage (AMM TASK 72-24-01-200-801-F00).

H. Put the Airplane Back to its Usual Condition

SUBTASK 72-21-00-080-001-F00

WARNING: MAKE SURE THAT YOU REMOVE ALL TOOLS, PARTS OR UNWANTED MATERIAL FROM THE INLET COWL. THIS WILL PREVENT INJURY TO PERSONS AND DAMAGE TO EQUIPMENT.

(1) Remove the protective mat, STD-585 from the inlet cowl.

BOEING PROPRIETARY - Copyright © Unpublished Work - See title page for details

DATE	TAIL NUMBER	STATION	AIRLINE CARD NO.	BOEING CARD NO.
				72-020-01-01

MECH	INSP

SUBTASK 72-21-00-080-002-F00

(2) Remove the DO-NOT-OPERATE tag from the applicable engine start lever.

SUBTASK 72-21-00-040-005-F00

(3) For engine 1, do this step:

Remove the safety tag and close this circuit breaker:

CAPT Electrical System Panel, P18-2

Row	Col	Number	Name
B	8	C01103	ENGINE 1 START VALVE

SUBTASK 72-21-00-040-003-F00

(4) For engine 2, do this step:

Remove the safety tag and close this circuit breaker:

F/O Electrical System Panel, P6-2

Row	Col	Number	Name
C	4	C00154	ENGINE 2 START VALVE

END OF TASK

BOEING PROPRIETARY - Copyright © Unpublished Work - See title page for details

DATE	TAIL NUMBER	STATION	AIRLINE CARD NO.	BOEING CARD NO.
				72-020-01-01

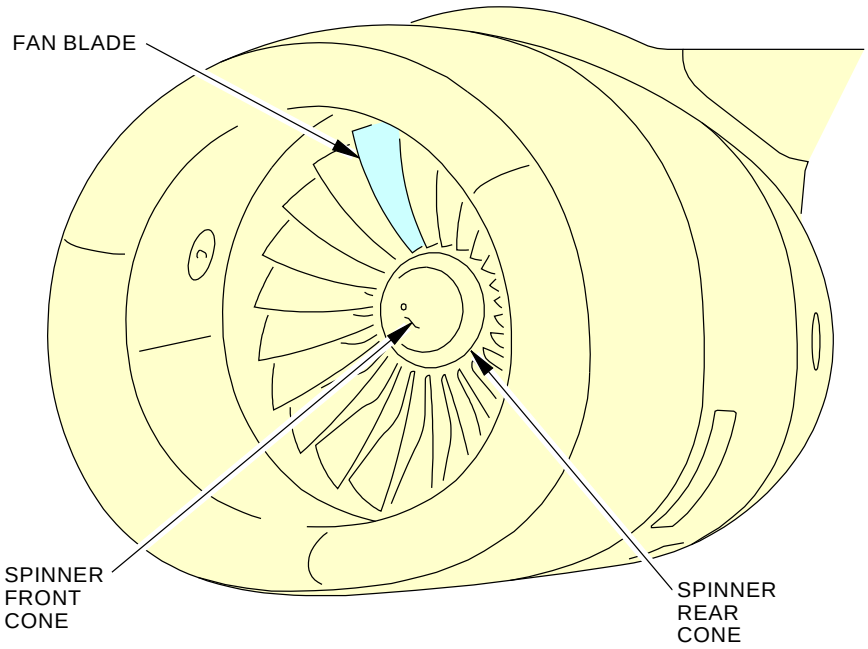

G28987 S0006582324_V3

Spinner and Fan Blade Inspection
Figure 1

BOEING PROPRIETARY - Copyright © Unpublished Work - See title page for details

DATE	TAIL NUMBER	STATION	AIRLINE CARD NO.	BOEING CARD NO.
				72-020-01-01

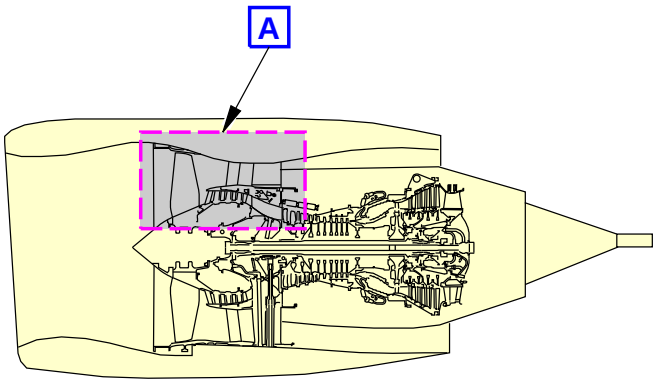

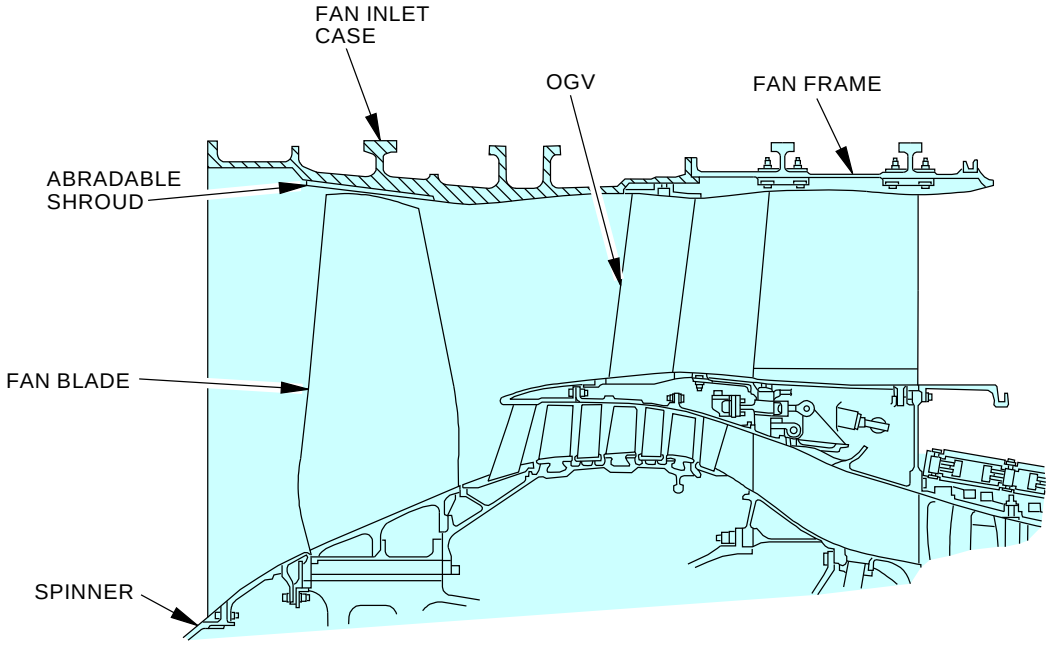

2189317 S0000485908_V2

Engine Inlet Inspection
Figure 2

BOEING PROPRIETARY - Copyright © Unpublished Work - See title page for details

AIRLINE CARD NO		TITLE			BOEING CARD NO.
		RIGHT ENGINE INLET AND FAN BLADES			72-020-02-01
DATE	TASK INSPECTION - DETAILED				RELATED CARD
TAIL NUMBER	WORK AREA RIGHT ENGINE	VERSION 1.1	THRESHOLD 2500 FH	REPEAT 2500 FH	APPLICABILITY AIRPLANE: ALL ENGINE: ALL
STATION	SKILL AIRPL				
		ACCESS			ZONE 421

Detailed inspection of right engine inlet and fan blades.

A. References

Reference	Title
AMM 72-21-01-000-801-F00	Spinner Cones Removal (P/B 401)
AMM 72-21-01-200-801-F00	Spinner Cone and Retaining Flange Inspection (P/B 601)
AMM 72-21-01-400-801-F00	Spinner Cones Installation (P/B 401)
AMM 72-21-02-000-802-F00	Fan Blade Replacement (Blade Pair) (P/B 401)
AMM 72-21-02-200-801-F00	Fan Module Inspection (P/B 601)
AMM 72-24-01-200-801-F00	Fan Inlet Case Inspection (Detail) (P/B 601)
AMM 72-24-02-200-801-F00	Abradable Shroud (Detail) Inspection (P/B 601)
AMM 72-24-02-200-802-F00	Local Recondition of the Abradable Shroud (P/B 801)

B. Tools/Equipment

NOTE: When more than one tool part number is listed under the same "Reference" number, the tools shown are alternates to each other within the same airplane series. Tool part numbers that are replaced or non-procurable are preceded by "Opt:", which stands for Optional.

Reference	Description
STD-585	Mat - Protective, 3/8 Inch (9.5 mm) Minimum Thickness, Minimum 42x60 Inches (1x1.5 meters) with Warning Streamers

BOEING PROPRIETARY - Copyright © Unpublished Work - See title page for details

DATE	TAIL NUMBER	STATION	AIRLINE CARD NO.	BOEING CARD NO.
				72-020-02-01

MECH	INSP

TASK 72-21-00-220-801-F00

1. Engine Inlet and Fan Blades Inspection (Detail)

(Figure 1, Figure 2)

A. General

(1) This task is a scheduled maintenance task which examines the inside of the engine inlet.

(2) The visual check is for the two part spinner, fan blades, and inside surfaces of the fan inlet case and related components.

B. Prepare For the Inspection

SUBTASK 72-21-00-040-001-F00

(1) For engine 1, do this step:

Open this circuit breaker and install safety tag:

CAPT Electrical System Panel, P18-2

Row	Col	Number	Name
B	8	C01103	ENGINE 1 START VALVE

SUBTASK 72-21-00-040-004-F00

(2) For engine 2, do this step:

Open this circuit breaker and install safety tag:

F/O Electrical System Panel, P6-2

Row	Col	Number	Name
C	4	C00154	ENGINE 2 START VALVE

SUBTASK 72-21-00-040-002-F00

(3) Make sure the start levers are in the CUTOFF position.

(a) Install a DO-NOT-OPERATE tag on the applicable start lever.

SUBTASK 72-21-00-480-001-F00

CAUTION: MAKE SURE YOU INSTALL THE PROTECTIVE MATS IN THE INLET COWL. THIS WILL PREVENT DAMAGE FROM TOOLS, PARTS OR UNWANTED MATERIAL THAT FALL ON THE INLET COWL.

(4) Install a protective mat, STD-585 in the inlet cowl.

C. Visually Examine the Spinner Front Cone

SUBTASK 72-21-00-210-002-F00

(1) Examine the exposed area of the spinner front cone for damage (AMM TASK 72-21-01-200-801-F00).

SUBTASK 72-21-00-210-010-F00

(2) If you find damage to the spinner front cone that is more than the limits, replace the spinner front cone, unless you are given other instructions.

These are the tasks:

Spinner Cones Removal, AMM TASK 72-21-01-000-801-F00,

Spinner Cones Installation, AMM TASK 72-21-01-400-801-F00.

BOEING PROPRIETARY - Copyright © Unpublished Work - See title page for details

DATE	TAIL NUMBER	STATION	AIRLINE CARD NO.	BOEING CARD NO.
				72-020-02-01

MECH	INSP

D. Visually Examine the Spinner Rear Cone

SUBTASK 72-21-00-210-004-F00

(1) Examine the exposed areas of the spinner rear cone for damage (AMM TASK 72-21-01-200-801-F00).

SUBTASK 72-21-00-210-011-F00

(2) If you find damage to the spinner rear cone that is more than the limits, replace the spinner rear cone, unless you are given other instructions.

These are the tasks:

Spinner Cones Removal, AMM TASK 72-21-01-000-801-F00,

Spinner Cones Installation, AMM TASK 72-21-01-400-801-F00.

E. Visually Examine the Fan Blades

SUBTASK 72-21-00-220-002-F00

WARNING: MAKE SURE YOU WEAR GLOVES WHEN YOU HANDLE THE FAN BLADES. IF YOU DO NOT WEAR GLOVES WHEN YOU HANDLE THE FAN BLADES, YOU CAN INJURE YOUR HANDS.

(1) Do a visual check of the exposed areas of the fan blades (AMM TASK 72-21-02-200-801-F00).

SUBTASK 72-21-00-210-012-F00

(2) If you find damage to the fan blade that is more than the limits, replace the fan blade, unless you are given other instructions. To replace it, do this task: Fan Blade Replacement (Blade Pair), AMM TASK 72-21-02-000-802-F00.

F. Visually Examine the Abradable Shroud

SUBTASK 72-21-00-210-008-F00

(1) Do a visual check of the abradable shroud for damage (AMM TASK 72-24-02-200-801-F00).

SUBTASK 72-21-00-300-001-F00

(2) If you find damage that is more than these limits, do this task: Local Recondition of the Abradable Shroud, AMM TASK 72-24-02-200-802-F00, unless you are given other instructions.

G. Visually Examine the Fan Inlet Case

SUBTASK 72-21-00-210-009-F00

(1) Do a visual check of the exposed areas of the fan inlet case for damage (AMM TASK 72-24-01-200-801-F00).

H. Put the Airplane Back to its Usual Condition

SUBTASK 72-21-00-080-001-F00

WARNING: MAKE SURE THAT YOU REMOVE ALL TOOLS, PARTS OR UNWANTED MATERIAL FROM THE INLET COWL. THIS WILL PREVENT INJURY TO PERSONS AND DAMAGE TO EQUIPMENT.

(1) Remove the protective mat, STD-585 from the inlet cowl.

BOEING PROPRIETARY - Copyright © Unpublished Work - See title page for details

DATE	TAIL NUMBER	STATION	AIRLINE CARD NO.	BOEING CARD NO.
				72-020-02-01

MECH	INSP

SUBTASK 72-21-00-080-002-F00

(2) Remove the DO-NOT-OPERATE tag from the applicable engine start lever.

SUBTASK 72-21-00-040-005-F00

(3) For engine 1, do this step:

Remove the safety tag and close this circuit breaker:

CAPT Electrical System Panel, P18-2

Row	Col	Number	Name
B	8	C01103	ENGINE 1 START VALVE

SUBTASK 72-21-00-040-003-F00

(4) For engine 2, do this step:

Remove the safety tag and close this circuit breaker:

F/O Electrical System Panel, P6-2

Row	Col	Number	Name
C	4	C00154	ENGINE 2 START VALVE

END OF TASK

BOEING PROPRIETARY - Copyright © Unpublished Work - See title page for details

DATE	TAIL NUMBER	STATION	AIRLINE CARD NO.	BOEING CARD NO.
				72-020-02-01

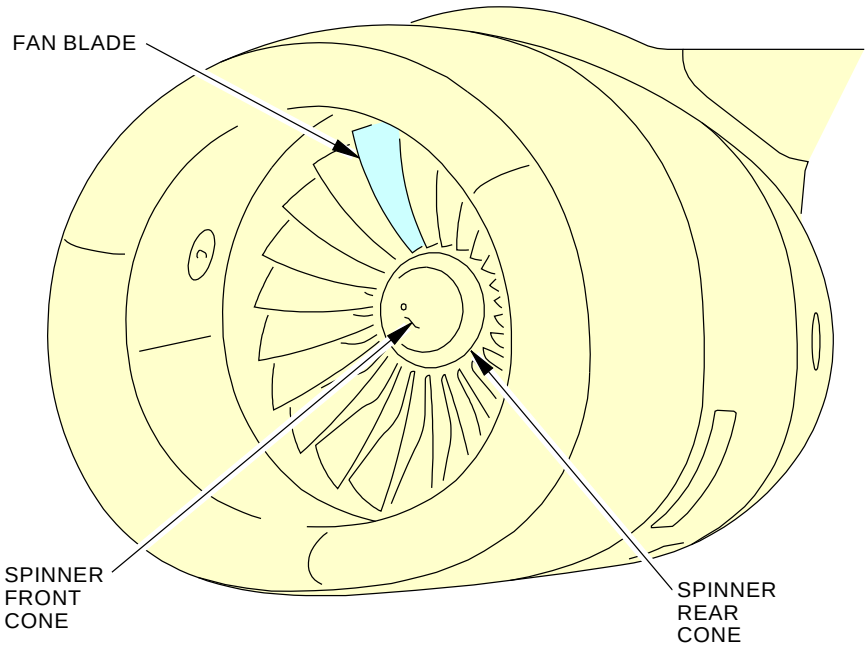

G28987 S0006582324_V3

Spinner and Fan Blade Inspection
Figure 1

BOEING PROPRIETARY - Copyright © Unpublished Work - See title page for details

DATE	TAIL NUMBER	STATION	AIRLINE CARD NO.	BOEING CARD NO.
				72-020-02-01

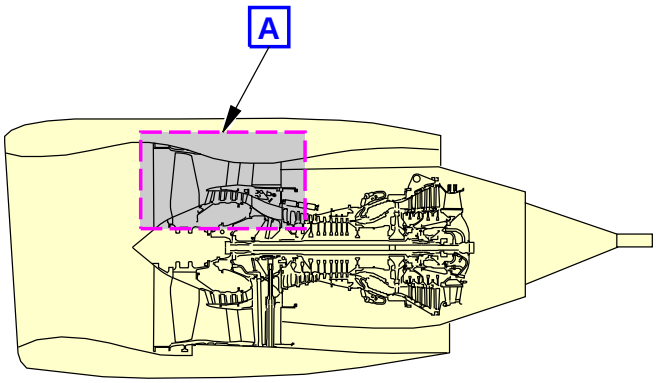

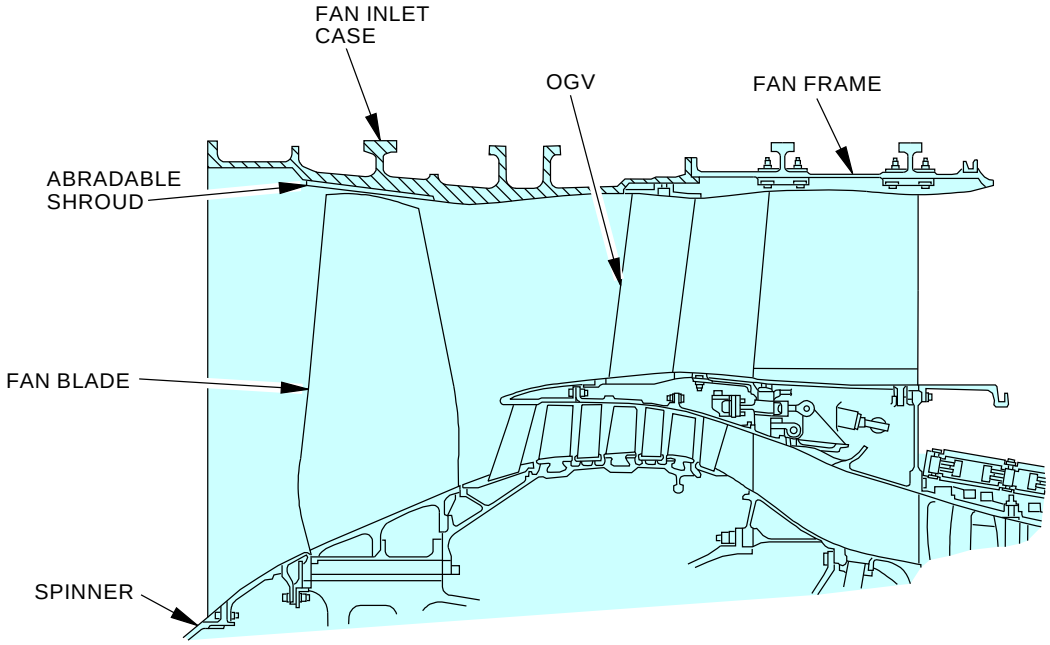

2189317 S0000485908_V2

Engine Inlet Inspection
Figure 2

BOEING PROPRIETARY - Copyright © Unpublished Work - See title page for details

AIRLINE CARD NO		TITLE			BOEING CARD NO.
		LUBRICATE LEFT ENGINE FAN BLADES DOVETAIL.			72-025-01-01
DATE	TASK LUBRICATE				RELATED CARD
TAIL NUMBER	WORK AREA LEFT ENGINE	VERSION 1.1	THRESHOLD 5000 FH	REPEAT 5000 FH	APPLICABILITY AIRPLANE: ALL ENGINE: ALL
STATION	SKILL AIRPL	1.2 NOTE	3000 FC	3000 FC	
		ACCESS			ZONE 411

Lubricate Left engine fan blades dovetail.

INTERVAL NOTE: Whichever comes first.

A. References

Reference	Title
AMM 70-10-05-600-801-F00	Application Of Molybdenum Disulfide And Other Lubricants Dispersed In An Inorganic Binder And Non-Flammable Solvent - Maintenance Practices (P/B 201)
AMM 72-21-01-000-801-F00	Spinner Cones Removal (P/B 401)
AMM 72-21-01-400-801-F00	Spinner Cones Installation (P/B 401)
AMM 72-21-02-000-801-F00	Fan Blade Removal (Complete Set) (P/B 401)
AMM 72-21-02-400-801-F00	Fan Blade Installation (Complete Set) (P/B 401)

B. Consumable Materials

Reference	Description	Specification
B00676 [CP1041]	Alcohol - Isopropyl	CFM CP1041, TT-I-735
G50766 [CP2240]	Sheet - Abrasive Sheet For Cleaning Up And Finishing, Scotch-Brite Type A CFS	CFM CP2240

C. Tools/Equipment

NOTE: When more than one tool part number is listed under the same "Reference" number, the tools shown are alternates to each other within the same airplane series. Tool part numbers that are replaced or non-procurable are preceded by "Opt:", which stands for Optional.

Reference	Description
STD-585	Mat - Protective, 3/8 Inch (9.5 mm) Minimum Thickness, Minimum 42x60 Inches (1x1.5 meters) with Warning Streamers

BOEING PROPRIETARY - Copyright © Unpublished Work - See title page for details

DATE	TAIL NUMBER	STATION	AIRLINE CARD NO.	BOEING CARD NO.
				72-025-01-01

MECH	INSP

TASK 72-21-00-640-801-F00

1. Fan Rotor Blades and Fan Disk Lubrication

A. General

(1) This procedure gives the data to lubricate the fan rotor blades and the fan disk.

(2) The fan and booster assembly is aft of the inlet cowl.

B. Prepare For the Procedure

SUBTASK 72-21-00-865-001-F00

(1) For engine 1, do this step:

Open this circuit breaker and install safety tag:

CAPT Electrical System Panel, P18-2

Row	Col	Number	Name
B	8	C01103	ENGINE 1 START VALVE

SUBTASK 72-21-00-865-002-F00

(2) For engine 2, do this step:

Open this circuit breaker and install safety tag:

F/O Electrical System Panel, P6-2

Row	Col	Number	Name
C	4	C00154	ENGINE 2 START VALVE

SUBTASK 72-21-00-860-001-F00

(3) Make sure the start levers are in the CUTOFF position.

(a) Install a DO-NOT-OPERATE tag on the applicable start lever.

SUBTASK 72-21-00-490-001-F00

(4) Install a protective mat, STD-585 in the inlet cowl.

SUBTASK 72-21-00-010-001-F00

(5) Do this task, Spinner Cones Removal, AMM TASK 72-21-01-000-801-F00.

SUBTASK 72-21-00-020-001-F00

(6) Do this task, Fan Blade Removal (Complete Set), AMM TASK 72-21-02-000-801-F00.

BOEING PROPRIETARY - Copyright © Unpublished Work - See title page for details

DATE	TAIL NUMBER	STATION	AIRLINE CARD NO.	BOEING CARD NO.
				72-025-01-01

MECH	INSP

C. Procedure

SUBTASK 72-21-00-110-001-F00

WARNING: DO NOT GET THE SOLVENT IN YOUR MOUTH, EYES, OR ON YOUR SKIN. DO NOT BREATHE IN THE FUMES FROM THE SOLVENT. PUT ON PROTECTIVE SPLASH GOGGLES AND GLOVES WHEN YOU USE THE SOLVENT. KEEP THE SOLVENT AWAY FROM SPARKS, FLAME, AND HEAT. THE SOLVENT IS POISONOUS AND FLAMMABLE, WHICH CAN CAUSE INJURIES TO PERSONS AND DAMAGE TO EQUIPMENT.

CAUTION: KEEP TRICHLOROETHYLENE, TRICHLOROETHANE, AND PERCHLOROETHYLENE AWAY FROM TITANIUM PARTS. CHLORINATED AND HALOGEN MATERIALS CAUSE DAMAGE TO TITANIUM PARTS.

(1) Clean all dirt and unwanted material from the fan blade roots, fan disk dovetail slots and shims. Use a clean cloth soaked with alcohol, B00676 [CP1041].

(a) If it is necessary, a soft bristle brush or dry Scotch-Brite Type A CFS Sheet, G50766 [CP2240] can be used to remove dirt build-up.

SUBTASK 72-21-00-640-001-F00

(2) Lubricate the items that follow (AMM TASK 70-10-05-600-801-F00):

NOTE: Make sure to use the reference, too much lubricant can cause high vibration or fumes in the cabin.

(a) Lubricate the mating faces of the fan blade spacer.

(b) Lubricate the threaded pins on the fan disk, booster spool and retaining flange.

(c) Lubricate the dovetail slots (pressure faces) of the fan disk.

(d) Lubricate the aft face of the shank of each fan blade.

(e) Lubricate the roots (Dovetails) of each blade.

AKS ALL POST CFM56-7B-72-0485 OR POST SB CFM56-7B-72-0324

(f) Lubricate the shims.

AKS ALL

D. Put the Airplane Back to its Usual Condition

SUBTASK 72-21-00-420-001-F00

(1) Do this task, Fan Blade Installation (Complete Set), AMM TASK 72-21-02-400-801-F00.

SUBTASK 72-21-00-410-001-F00

(2) Do this task, Spinner Cones Installation, AMM TASK 72-21-01-400-801-F00.

SUBTASK 72-21-00-490-002-F00

CAUTION: MAKE SURE THERE ARE NO TOOLS, PARTS, OR OTHER UNWANTED MATERIAL IN THE INLET COWL. IF YOU DO NOT OBEY THESE INSTRUCTIONS, YOU CAN CAUSE DAMAGE TO THE ENGINE.

(3) Remove the protective mat, STD-585 from the lower surface of the inlet cowl.

BOEING PROPRIETARY - Copyright © Unpublished Work - See title page for details

DATE	TAIL NUMBER	STATION	AIRLINE CARD NO.	BOEING CARD NO.
				72-025-01-01

MECH	INSP

SUBTASK 72-21-00-860-002-F00

(4) Remove the safety tags and close these circuit breakers:

CAPT Electrical System Panel, P18-2

Row	Col	Number	Name
B	8	C01103	ENGINE 1 START VALVE

F/O Electrical System Panel, P6-2

Row	Col	Number	Name
C	4	C00154	ENGINE 2 START VALVE

SUBTASK 72-21-00-860-003-F00

(5) Remove the DO-NOT-OPERATE tag from the start lever for the applicable engine.

——— END OF TASK ———

BOEING PROPRIETARY - Copyright © Unpublished Work - See title page for details

DATE	TAIL NUMBER	STATION	AIRLINE CARD NO.	BOEING CARD NO.
				72-025-01-01

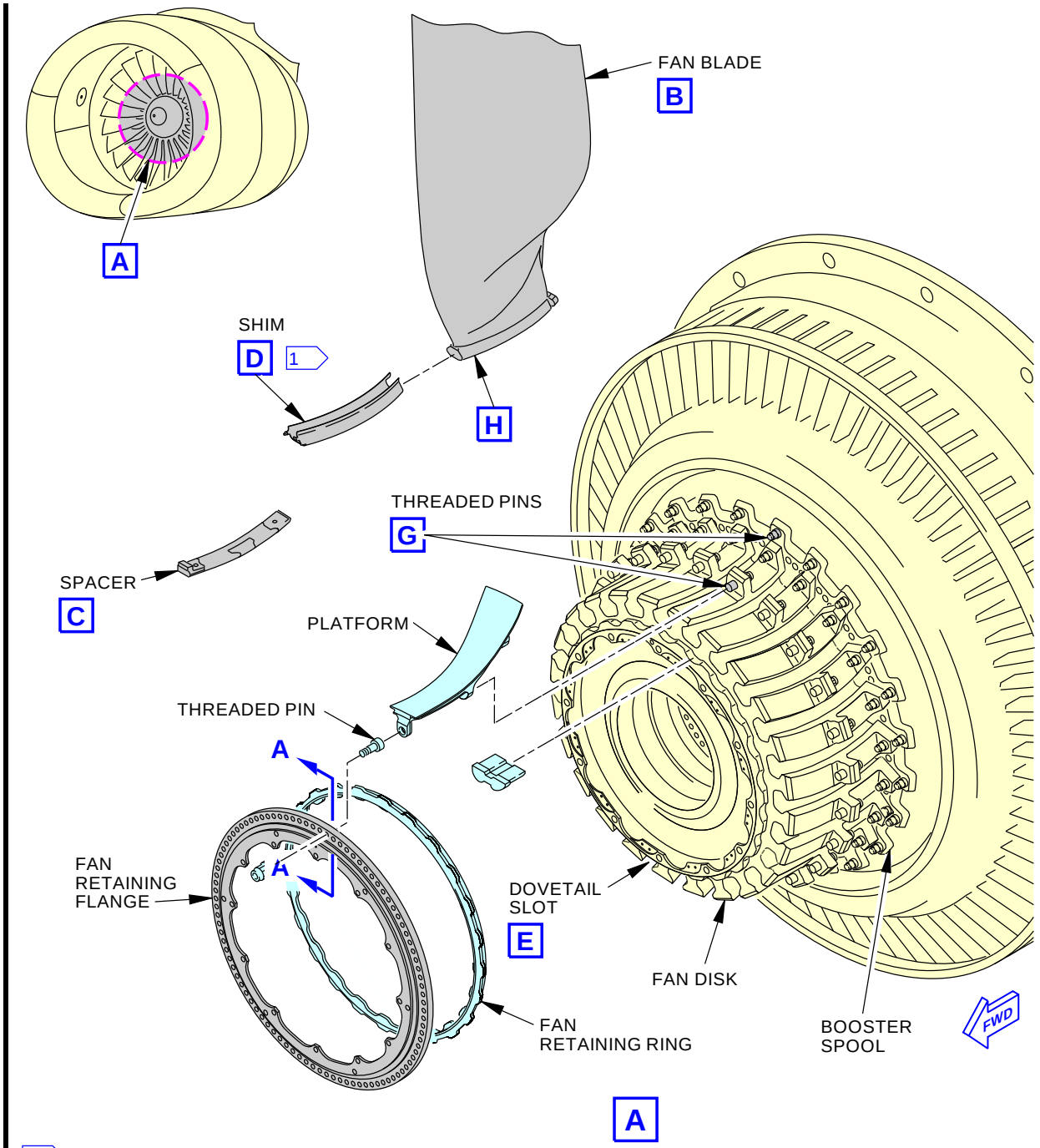

1 ENGINES POST-CFM56-7B-SB 72-0485 OR
ENGINES POST-CFM56-7B-SB 72-0324

1651701 S0000302901_V3

Fan Rotor Blade and Fan Disk Lubrication
Figure 1 (Sheet 1 of 4)

EFFECTIVITY	SOURCE	
AKS ALL	**MRB**	**LUBRICATE LEFT ENGINE FAN BLADES DOVETAIL.**

BOEING PROPRIETARY - Copyright © Unpublished Work - See title page for details

DATE	TAIL NUMBER	STATION	AIRLINE CARD NO.	BOEING CARD NO.
				72-025-01-01

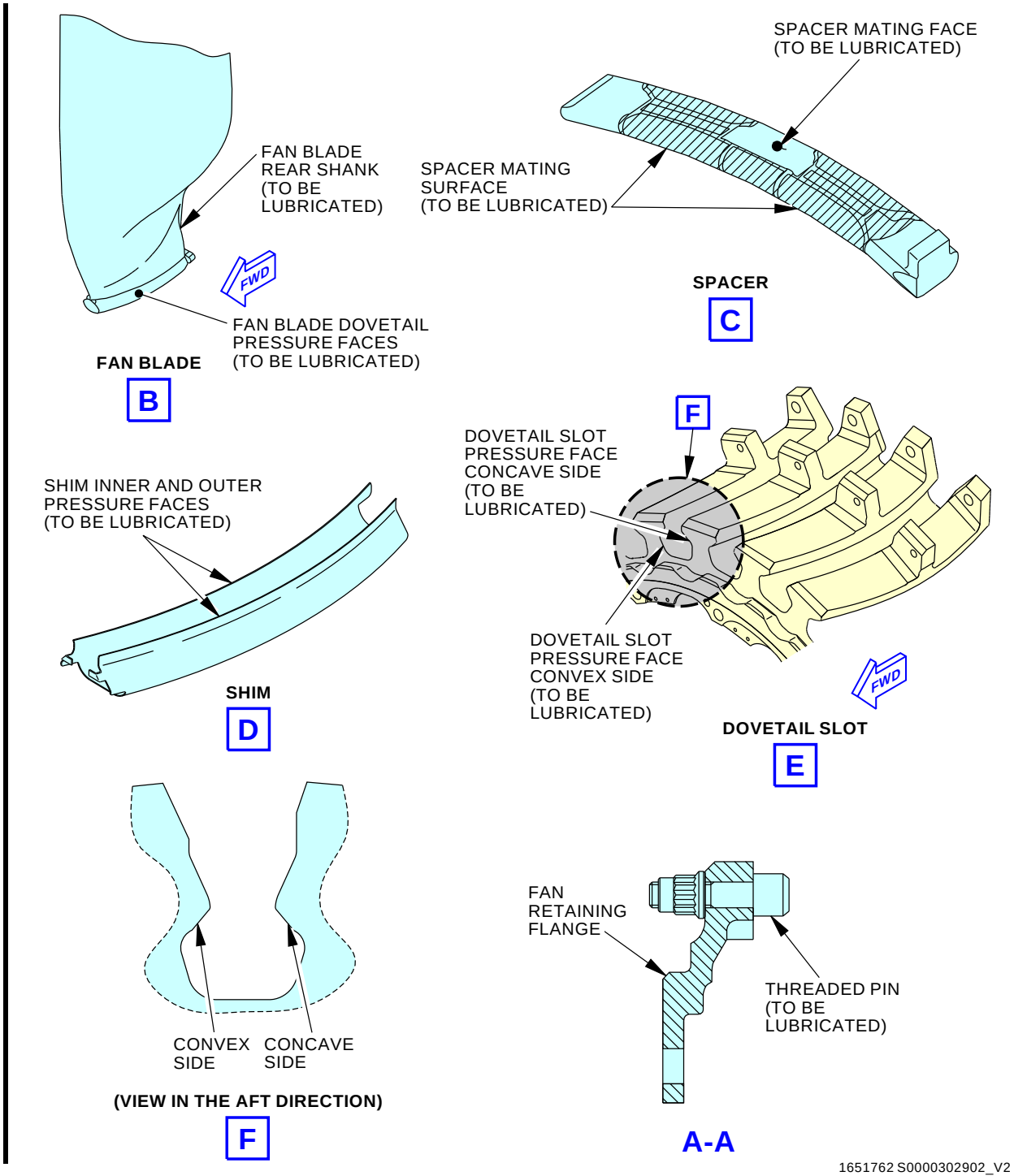

Fan Rotor Blade and Fan Disk Lubrication
Figure 1 (Sheet 2 of 4)

EFFECTIVITY	SOURCE	
AKS ALL	MRB	LUBRICATE LEFT ENGINE FAN BLADES DOVETAIL.

BOEING PROPRIETARY - Copyright © Unpublished Work - See title page for details

DATE	TAIL NUMBER	STATION	AIRLINE CARD NO.	BOEING CARD NO.
				72-025-01-01

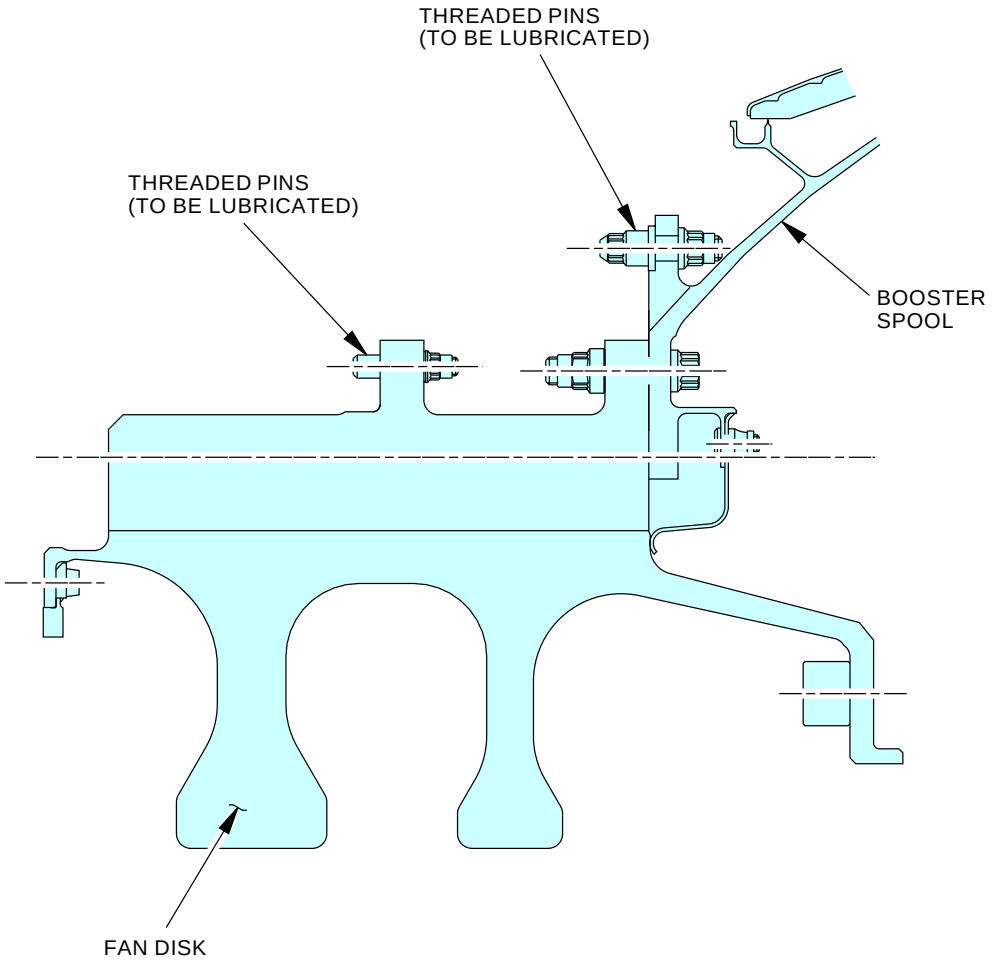

THREADED PINS

G

1652026 S0000302903_V2

Fan Rotor Blade and Fan Disk Lubrication
Figure 1 (Sheet 3 of 4)

EFFECTIVITY	SOURCE	
AKS ALL	**MRB**	**LUBRICATE LEFT ENGINE FAN BLADES DOVETAIL.**

BOEING PROPRIETARY - Copyright © Unpublished Work - See title page for details

DATE	TAIL NUMBER	STATION	AIRLINE CARD NO.	BOEING CARD NO.
				72-025-01-01

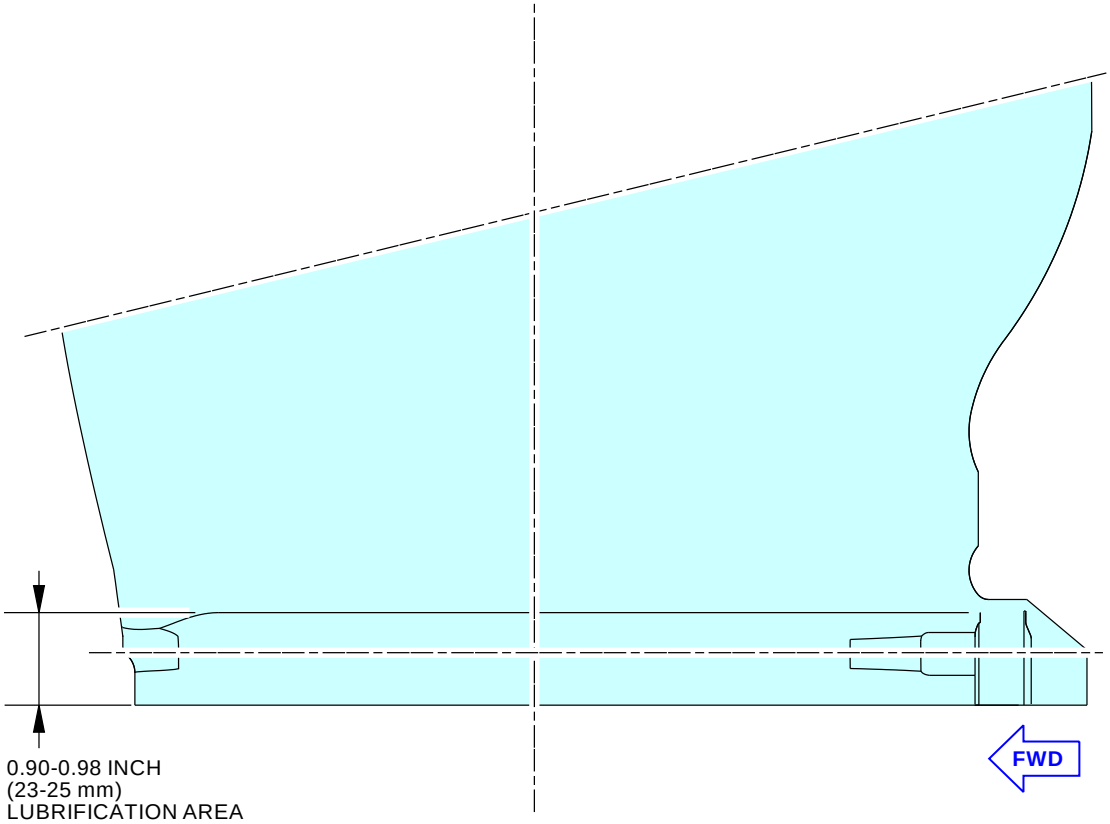

H

3000495330

2266508 S0000508479_V2

Fan Rotor Blade and Fan Disk Lubrication
Figure 1 (Sheet 4 of 4)

BOEING PROPRIETARY - Copyright © Unpublished Work - See title page for details

AIRLINE CARD NO		TITLE			BOEING CARD NO.
		LUBRICATE RIGHT ENGINE FAN BLADES DOVETAIL.			72-025-02-01
DATE	TASK LUBRICATE				RELATED CARD
TAIL NUMBER	WORK AREA RIGHT ENGINE	VERSION 1.1	THRESHOLD 5000 FH	REPEAT 5000 FH	APPLICABILITY AIRPLANE: ALL ENGINE: ALL
STATION	SKILL AIRPL	1.2 NOTE	3000 FC	3000 FC	
		ACCESS			ZONE 421

Lubricate Right engine fan blades dovetail.

INTERVAL NOTE: Whichever comes first.

A. References

Reference	Title
AMM 70-10-05-600-801-F00	Application Of Molybdenum Disulfide And Other Lubricants Dispersed In An Inorganic Binder And Non-Flammable Solvent - Maintenance Practices (P/B 201)
AMM 72-21-01-000-801-F00	Spinner Cones Removal (P/B 401)
AMM 72-21-01-400-801-F00	Spinner Cones Installation (P/B 401)
AMM 72-21-02-000-801-F00	Fan Blade Removal (Complete Set) (P/B 401)
AMM 72-21-02-400-801-F00	Fan Blade Installation (Complete Set) (P/B 401)

B. Consumable Materials

Reference	Description	Specification
B00676 [CP1041]	Alcohol - Isopropyl	CFM CP1041, TT-I-735
G50766 [CP2240]	Sheet - Abrasive Sheet For Cleaning Up And Finishing, Scotch-Brite Type A CFS	CFM CP2240

C. Tools/Equipment

NOTE: When more than one tool part number is listed under the same "Reference" number, the tools shown are alternates to each other within the same airplane series. Tool part numbers that are replaced or non-procurable are preceded by "Opt:", which stands for Optional.

Reference	Description
STD-585	Mat - Protective, 3/8 Inch (9.5 mm) Minimum Thickness, Minimum 42x60 Inches (1x1.5 meters) with Warning Streamers

BOEING PROPRIETARY - Copyright © Unpublished Work - See title page for details

DATE	TAIL NUMBER	STATION	AIRLINE CARD NO.	BOEING CARD NO.
				72-025-02-01

MECH	INSP

TASK 72-21-00-640-801-F00

1. Fan Rotor Blades and Fan Disk Lubrication

A. General

(1) This procedure gives the data to lubricate the fan rotor blades and the fan disk.

(2) The fan and booster assembly is aft of the inlet cowl.

B. Prepare For the Procedure

SUBTASK 72-21-00-865-001-F00

(1) For engine 1, do this step:

Open this circuit breaker and install safety tag:

CAPT Electrical System Panel, P18-2

Row	Col	Number	Name
B	8	C01103	ENGINE 1 START VALVE

SUBTASK 72-21-00-865-002-F00

(2) For engine 2, do this step:

Open this circuit breaker and install safety tag:

F/O Electrical System Panel, P6-2

Row	Col	Number	Name
C	4	C00154	ENGINE 2 START VALVE

SUBTASK 72-21-00-860-001-F00

(3) Make sure the start levers are in the CUTOFF position.

(a) Install a DO-NOT-OPERATE tag on the applicable start lever.

SUBTASK 72-21-00-490-001-F00

(4) Install a protective mat, STD-585 in the inlet cowl.

SUBTASK 72-21-00-010-001-F00

(5) Do this task, Spinner Cones Removal, AMM TASK 72-21-01-000-801-F00.

SUBTASK 72-21-00-020-001-F00

(6) Do this task, Fan Blade Removal (Complete Set), AMM TASK 72-21-02-000-801-F00.

BOEING PROPRIETARY - Copyright © Unpublished Work - See title page for details

DATE	TAIL NUMBER	STATION	AIRLINE CARD NO.	BOEING CARD NO.
				72-025-02-01

MECH	INSP

C. Procedure

SUBTASK 72-21-00-110-001-F00

WARNING: DO NOT GET THE SOLVENT IN YOUR MOUTH, EYES, OR ON YOUR SKIN. DO NOT BREATHE IN THE FUMES FROM THE SOLVENT. PUT ON PROTECTIVE SPLASH GOGGLES AND GLOVES WHEN YOU USE THE SOLVENT. KEEP THE SOLVENT AWAY FROM SPARKS, FLAME, AND HEAT. THE SOLVENT IS POISONOUS AND FLAMMABLE, WHICH CAN CAUSE INJURIES TO PERSONS AND DAMAGE TO EQUIPMENT.

CAUTION: KEEP TRICHLOROETHYLENE, TRICHLOROETHANE, AND PERCHLOROETHYLENE AWAY FROM TITANIUM PARTS. CHLORINATED AND HALOGEN MATERIALS CAUSE DAMAGE TO TITANIUM PARTS.

(1) Clean all dirt and unwanted material from the fan blade roots, fan disk dovetail slots and shims. Use a clean cloth soaked with alcohol, B00676 [CP1041].

(a) If it is necessary, a soft bristle brush or dry Scotch-Brite Type A CFS Sheet, G50766 [CP2240] can be used to remove dirt build-up.

SUBTASK 72-21-00-640-001-F00

(2) Lubricate the items that follow (AMM TASK 70-10-05-600-801-F00):

NOTE: Make sure to use the reference, too much lubricant can cause high vibration or fumes in the cabin.

(a) Lubricate the mating faces of the fan blade spacer.

(b) Lubricate the threaded pins on the fan disk, booster spool and retaining flange.

(c) Lubricate the dovetail slots (pressure faces) of the fan disk.

(d) Lubricate the aft face of the shank of each fan blade.

(e) Lubricate the roots (Dovetails) of each blade.

AKS ALL POST CFM56-7B-72-0485 OR POST SB CFM56-7B-72-0324

(f) Lubricate the shims.

AKS ALL

D. Put the Airplane Back to its Usual Condition

SUBTASK 72-21-00-420-001-F00

(1) Do this task, Fan Blade Installation (Complete Set), AMM TASK 72-21-02-400-801-F00.

SUBTASK 72-21-00-410-001-F00

(2) Do this task, Spinner Cones Installation, AMM TASK 72-21-01-400-801-F00.

SUBTASK 72-21-00-490-002-F00

CAUTION: MAKE SURE THERE ARE NO TOOLS, PARTS, OR OTHER UNWANTED MATERIAL IN THE INLET COWL. IF YOU DO NOT OBEY THESE INSTRUCTIONS, YOU CAN CAUSE DAMAGE TO THE ENGINE.

(3) Remove the protective mat, STD-585 from the lower surface of the inlet cowl.

BOEING PROPRIETARY - Copyright © Unpublished Work - See title page for details

DATE	TAIL NUMBER	STATION	AIRLINE CARD NO.	BOEING CARD NO.
				72-025-02-01

MECH	INSP

SUBTASK 72-21-00-860-002-F00

(4) Remove the safety tags and close these circuit breakers:

CAPT Electrical System Panel, P18-2

Row	Col	Number	Name
B	8	C01103	ENGINE 1 START VALVE

F/O Electrical System Panel, P6-2

Row	Col	Number	Name
C	4	C00154	ENGINE 2 START VALVE

SUBTASK 72-21-00-860-003-F00

(5) Remove the DO-NOT-OPERATE tag from the start lever for the applicable engine.

——— END OF TASK ———

BOEING PROPRIETARY - Copyright © Unpublished Work - See title page for details

DATE	TAIL NUMBER	STATION	AIRLINE CARD NO.	BOEING CARD NO.
				72-025-02-01

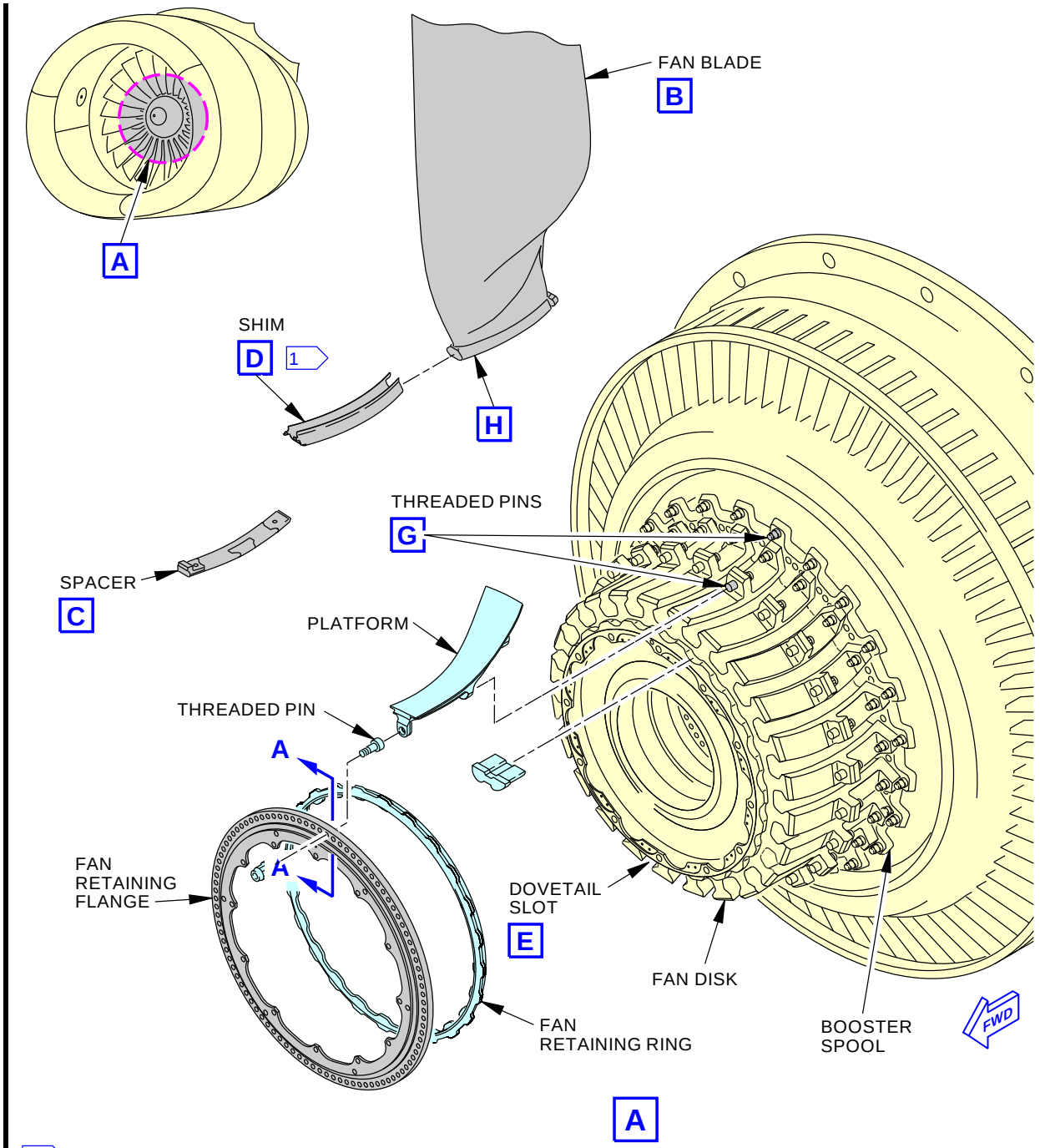

1 ENGINES POST-CFM56-7B-SB 72-0485 OR
ENGINES POST-CFM56-7B-SB 72-0324

1651701 S0000302901_V3

Fan Rotor Blade and Fan Disk Lubrication
Figure 1 (Sheet 1 of 4)

EFFECTIVITY	SOURCE	
AKS ALL	**MRB**	**LUBRICATE RIGHT ENGINE FAN BLADES DOVETAIL.**

BOEING PROPRIETARY - Copyright © Unpublished Work - See title page for details

DATE	TAIL NUMBER	STATION	AIRLINE CARD NO.	BOEING CARD NO.
				72-025-02-01

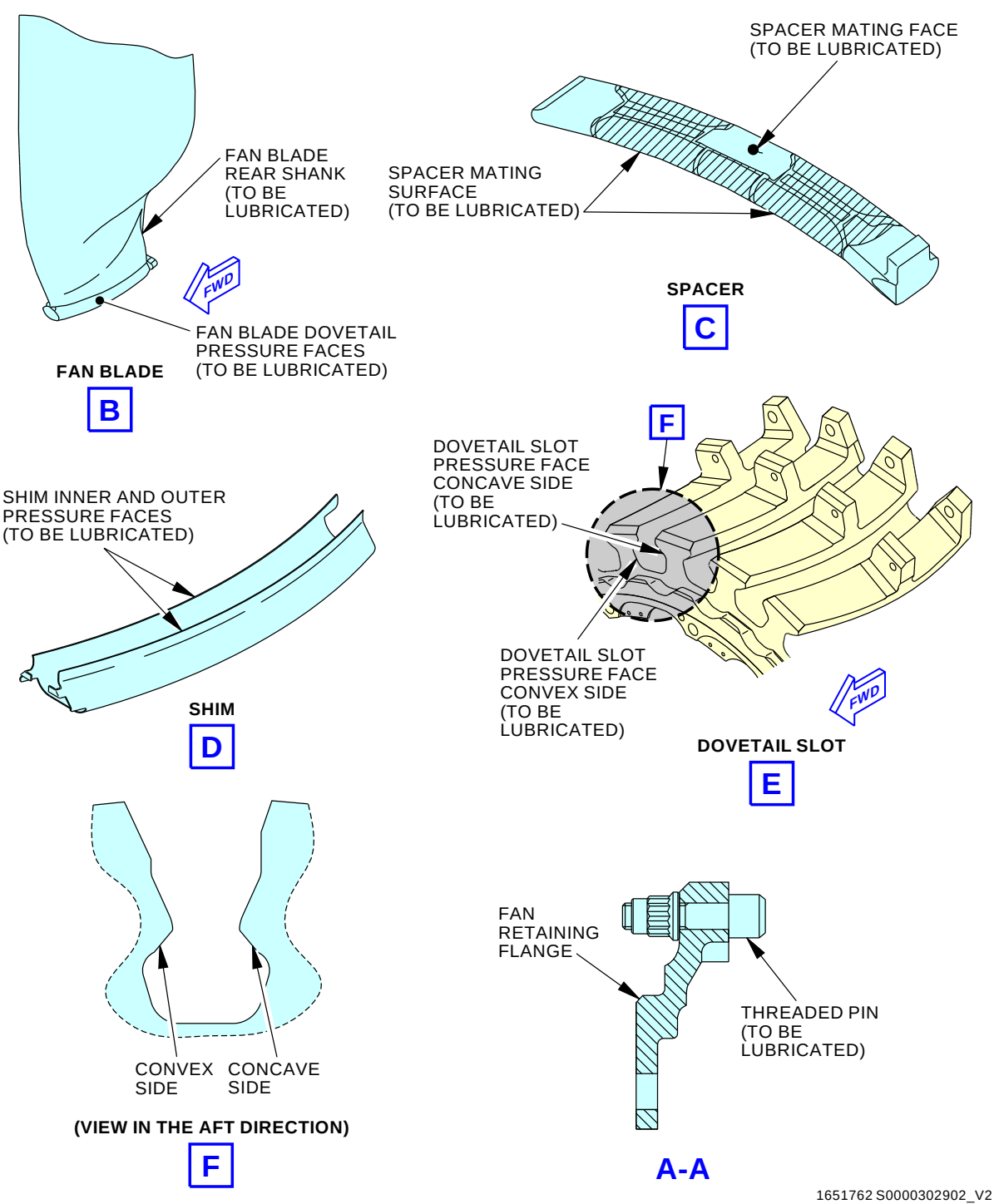

Fan Rotor Blade and Fan Disk Lubrication
Figure 1 (Sheet 2 of 4)

EFFECTIVITY	SOURCE	
AKS ALL	MRB	LUBRICATE RIGHT ENGINE FAN BLADES DOVETAIL.

BOEING PROPRIETARY - Copyright © Unpublished Work - See title page for details

DATE	TAIL NUMBER	STATION	AIRLINE CARD NO.	BOEING CARD NO.
				72-025-02-01

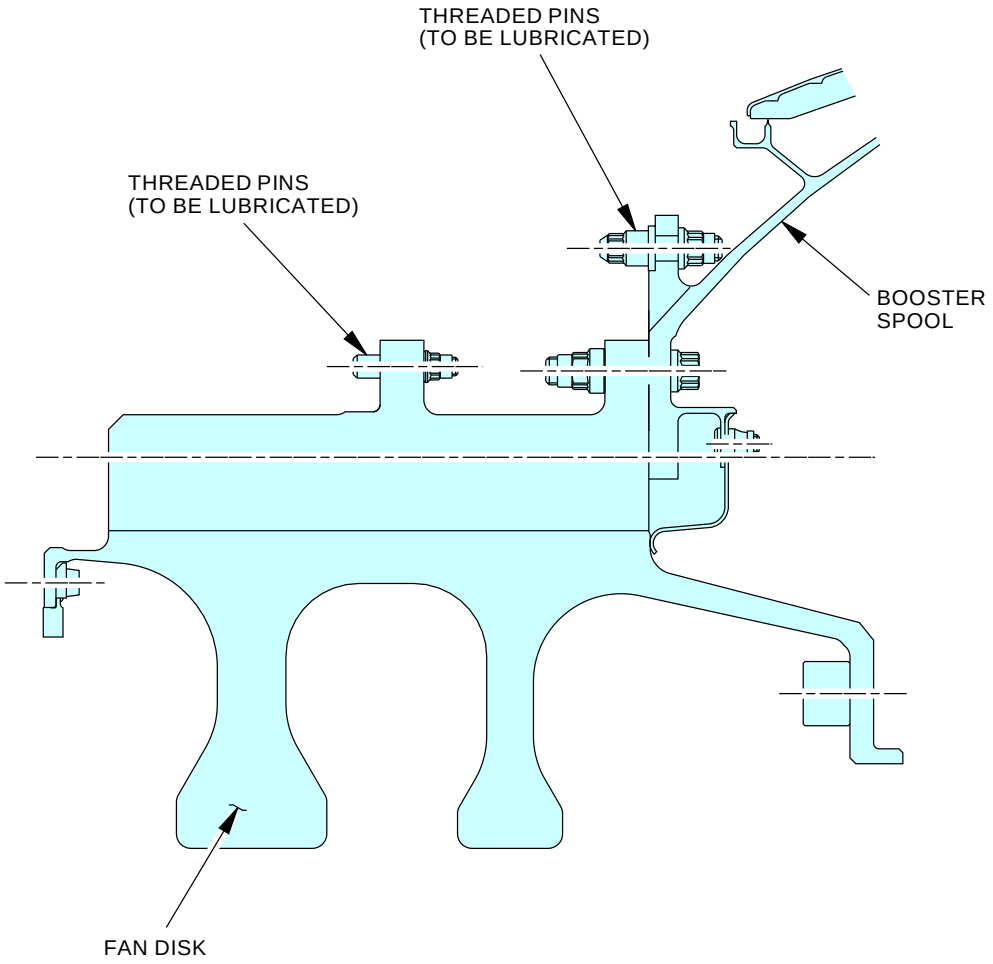

THREADED PINS

G

1652026 S0000302903_V2

Fan Rotor Blade and Fan Disk Lubrication
Figure 1 (Sheet 3 of 4)

EFFECTIVITY	SOURCE	
AKS ALL	**MRB**	**LUBRICATE RIGHT ENGINE FAN BLADES DOVETAIL.**

BOEING PROPRIETARY - Copyright © Unpublished Work - See title page for details

DATE	TAIL NUMBER	STATION	AIRLINE CARD NO.	BOEING CARD NO.
				72-025-02-01

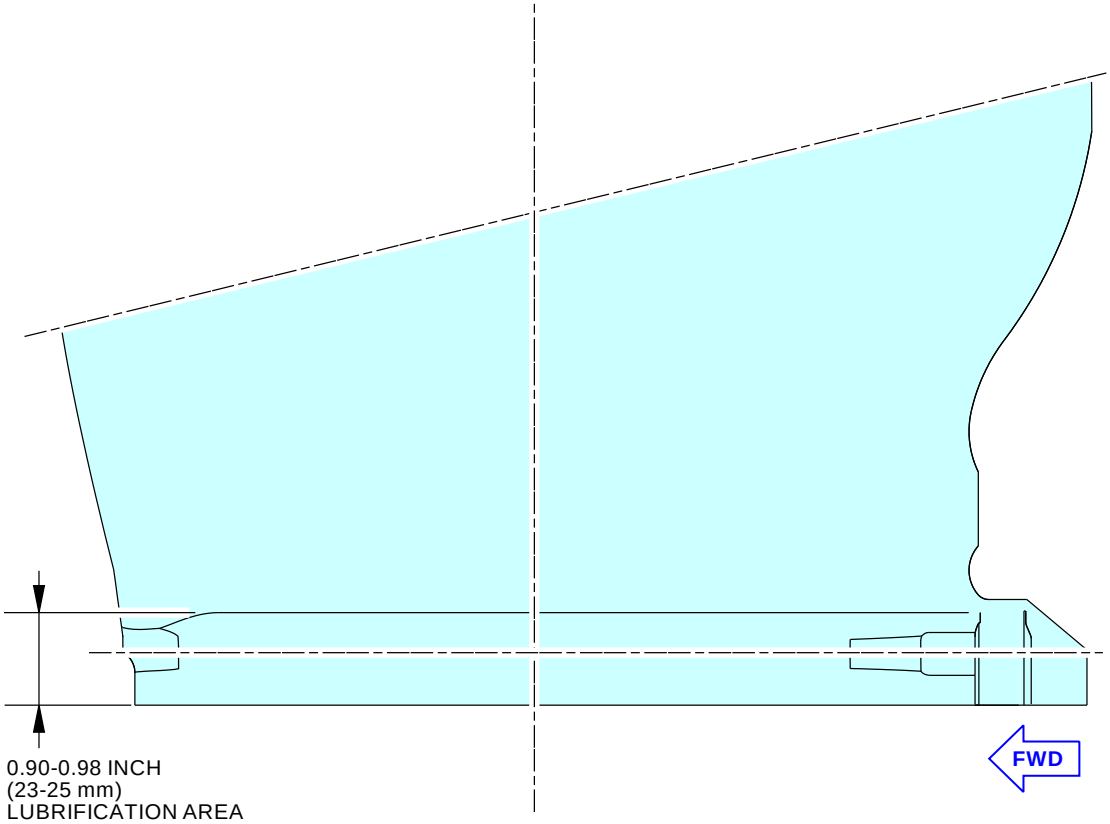

H

3000495330

2266508 S0000508479_V2

Fan Rotor Blade and Fan Disk Lubrication
Figure 1 (Sheet 4 of 4)

BOEING PROPRIETARY - Copyright © Unpublished Work - See title page for details

AIRLINE CARD NO		TITLE			BOEING CARD NO.
		LEFT FAN DISK			72-030-01-01
DATE	TASK				RELATED CARD
	REPLACE				
TAIL NUMBER	WORK AREA	VERSION	THRESHOLD	REPEAT	APPLICABILITY
	LEFT ENGINE	1.1	LIF LIM		AIRPLANE: ALL / ENGINE: ALL
STATION	SKILL				
	ENGIN				
		ACCESS			ZONE
					411

Discard left engine fan disk at life limit.

EFFECTIVITY	SOURCE	
AKS ALL	MRB	LEFT FAN DISK

BOEING PROPRIETARY - Copyright © Unpublished Work - See title page for details

DATE	TAIL NUMBER	STATION	AIRLINE CARD NO.	BOEING CARD NO.
				72-030-01-01

MECH	INSP

TASK 72-99-99-000-801-F00

1. Discard the Fan Disk

A. Procedure

SUBTASK 72-99-99-020-001-F00

(1) Remove and discard the fan disk.

——— END OF TASK ———

BOEING PROPRIETARY - Copyright © Unpublished Work - See title page for details

BOEING

737-600/700/800/900
TASK CARDS

AIRLINE CARD NO		TITLE			BOEING CARD NO.
		RIGHT FAN DISK			72-030-02-01
DATE	TASK REPLACE				RELATED CARD
TAIL NUMBER	WORK AREA RIGHT ENGINE	VERSION 1.1	THRESHOLD LIF LIM	REPEAT	APPLICABILITY AIRPLANE: ALL ENGINE: ALL
STATION	SKILL ENGIN				
		ACCESS			ZONE 421

Discard right engine fan disk at life limit.

EFFECTIVITY	SOURCE	
AKS ALL	MRB	RIGHT FAN DISK D633A109-AKS 72-030-02-01

BOEING PROPRIETARY - Copyright © Unpublished Work - See title page for details

DATE	TAIL NUMBER	STATION	AIRLINE CARD NO.	BOEING CARD NO.
				72-030-02-01

MECH	INSP

TASK 72-99-99-000-801-F00

1. Discard the Fan Disk

A. Procedure

SUBTASK 72-99-99-020-001-F00

(1) Remove and discard the fan disk.

——— END OF TASK ———

BOEING PROPRIETARY - Copyright © Unpublished Work - See title page for details

AIRLINE CARD NO		TITLE			BOEING CARD NO.
		LEFT ENGINE BOOSTER SPOOL			72-040-01-01
DATE	TASK REPLACE				RELATED CARD
TAIL NUMBER	WORK AREA LEFT ENGINE	VERSION 1.1	THRESHOLD LIF LIM	REPEAT	APPLICABILITY AIRPLANE: ALL ENGINE: ALL
STATION	SKILL ENGIN				
		ACCESS			ZONE 411

Discard left engine booster spool at life limit.

Note: Refer to the engine shop manual, Chapter 5 for life limits.

BOEING PROPRIETARY - Copyright © Unpublished Work - See title page for details

DATE	TAIL NUMBER	STATION	AIRLINE CARD NO.	BOEING CARD NO.
				72-040-01-01

MECH	INSP

TASK 72-99-99-000-802-F00

1. Discard the Booster Spool

A. Procedure

SUBTASK 72-99-99-020-002-F00

(1) Remove and discard the booster spool.

——— END OF TASK ———

BOEING PROPRIETARY - Copyright © Unpublished Work - See title page for details

BOEING

737-600/700/800/900
TASK CARDS

AIRLINE CARD NO		TITLE			BOEING CARD NO.
		RIGHT ENGINE BOOSTER SPOOL			72-040-02-01
DATE	TASK REPLACE				RELATED CARD
TAIL NUMBER	WORK AREA RIGHT ENGINE	VERSION 1.1	THRESHOLD LIF LIM	REPEAT	APPLICABILITY AIRPLANE: ALL ENGINE: ALL
STATION	SKILL ENGIN				
		ACCESS			ZONE 421

Discard right engine booster spool at life limit.

Note: Refer to the engine shop manual, Chapter 5 for life limits.

BOEING PROPRIETARY - Copyright © Unpublished Work - See title page for details

DATE	TAIL NUMBER	STATION	AIRLINE CARD NO.	BOEING CARD NO.
				72-040-02-01

MECH	INSP

TASK 72-99-99-000-802-F00

1. Discard the Booster Spool

A. Procedure

SUBTASK 72-99-99-020-002-F00

(1) Remove and discard the booster spool.

——— END OF TASK ———

BOEING PROPRIETARY - Copyright © Unpublished Work - See title page for details

AIRLINE CARD NO		TITLE			BOEING CARD NO.
		LEFT ENGINE FAN SHAFT			72-050-01-01
DATE	TASK				RELATED CARD
	REPLACE				
TAIL NUMBER	WORK AREA	VERSION	THRESHOLD	REPEAT	APPLICABILITY
	LEFT ENGINE	1.1	LIF LIM		AIRPLANE: ALL / ENGINE: ALL
STATION	SKILL				
	ENGIN				
		ACCESS			ZONE
					411

Discard left engine fan shaft at life limit.

Note: Refer to the engine shop manual, Chapter 5 for life limits.

BOEING PROPRIETARY - Copyright © Unpublished Work - See title page for details

DATE	TAIL NUMBER	STATION	AIRLINE CARD NO.	BOEING CARD NO.
				72-050-01-01

MECH	INSP

TASK 72-99-99-000-803-F00

1. Discard the Fan Shaft

A. Procedure

SUBTASK 72-99-99-000-001-F00

(1) Remove and discard the fan shaft.

——— END OF TASK ———

BOEING PROPRIETARY - Copyright © Unpublished Work - See title page for details

AIRLINE CARD NO		TITLE			BOEING CARD NO.
		RIGHT ENGINE FAN SHAFT			72-050-02-01
DATE	TASK REPLACE				RELATED CARD
TAIL NUMBER	WORK AREA RIGHT ENGINE	VERSION 1.1	THRESHOLD LIF LIM	REPEAT	APPLICABILITY AIRPLANE: ALL ENGINE: ALL
STATION	SKILL ENGIN				
		ACCESS			ZONE 421

Discard right engine fan shaft at life limit.

Note: Refer to the engine shop manual, Chapter 5 for life limits.

BOEING PROPRIETARY - Copyright © Unpublished Work - See title page for details

DATE	TAIL NUMBER	STATION	AIRLINE CARD NO.	BOEING CARD NO.
				72-050-02-01

MECH	INSP

TASK 72-99-99-000-803-F00

1. Discard the Fan Shaft

A. Procedure

SUBTASK 72-99-99-000-001-F00

(1) Remove and discard the fan shaft.

——— END OF TASK ———

BOEING PROPRIETARY - Copyright © Unpublished Work - See title page for details

AIRLINE CARD NO		TITLE			BOEING CARD NO.
		LEFT ENGINE AGB/TGB MOUNT FLANGES AND FAN CASE/FRAME MOUNTS			72-070-01-01
DATE	TASK VISUAL CHECK				RELATED CARD
TAIL NUMBER	WORK AREA LEFT ENGINE	VERSION 1.1	THRESHOLD 15000 FH	REPEAT 15000 FH	APPLICABILITY AIRPLANE: ALL ENGINE: ALL
STATION	SKILL AIRPL				
		ACCESS 413 414			ZONE 411

Visual check of the left engine accessory gearbox/transfer gearbox mount flanges and fan case and fan frame attachment mounts.

A. References

Reference	Title
AMM 70-20-01-800-804-F00	Lockwire Installation (P/B 201)
AMM 71-00-02-000-801-F00	Power Plant Removal (P/B 401)
AMM 71-00-02-400-801-F00	Power Plant Installation (P/B 401)
AMM 71-11-02-010-801-F00	Open the Fan Cowl Panels (P/B 201)
AMM 71-11-02-410-801-F00	Close the Fan Cowl Panels (P/B 201)
AMM 72-62-00-000-801-F00	Transfer Gearbox Assembly Removal (P/B 401)
AMM 72-62-00-400-801-F00	Transfer Gearbox Assembly Installation (P/B 401)
AMM 72-63-00-000-802-F00	Axial Link End Dampers Removal (P/B 201)
AMM 72-63-00-000-803-F00	Axial Link End or Upper (Lower) Mount Link Removal (P/B 201)
AMM 72-63-00-000-804-F00	Accessory Gearbox Removal (P/B 401)
AMM 72-63-00-400-802-F00	Axial Link End Dampers Installation (P/B 201)
AMM 72-63-00-400-803-F00	Axial Link End or Upper (Lower) Mount Link Installation (P/B 201)
AMM 72-63-00-400-804-F00	Accessory Gearbox Installation (P/B 401)

BOEING PROPRIETARY - Copyright © Unpublished Work - See title page for details

DATE	TAIL NUMBER	STATION	AIRLINE CARD NO.	BOEING CARD NO.
				72-070-01-01

MECH	INSP

TASK 72-20-00-210-801-F00

1. TGB and AGB Mount Lugs Inspection (Visual Check)

A. General

(1) This task is a visual check of the mount lugs on the fan frame and case which hold the transfer gearbox (TGB) and accessory gearbox (AGB). This is a scheduled maintenance task.

(2) The TGB is attached to the fan frame at approximately the 9:00 o'clock position. The AGB is attached on the left side of the fan case.

B. Procedure

SUBTASK 72-20-00-010-001-F00

(1) Do this task: Open the Fan Cowl Panels, AMM TASK 71-11-02-010-801-F00.

SUBTASK 72-20-00-210-001-F00

(2) Visually examine the mount lugs on the fan frame which hold the TGB and the mount lugs on the fan case which hold the AGB for damage:

(a) Cracks that extend from the bolt holes in the mount lugs

1) Not serviceable.

2) A Continue-In-Service limit of 10 cycles is permitted for one crack that goes through one mounting lug bolt hole, not more than 0.25 in. (6.35 mm) in length.

(b) Cracks in the areas of the mount lugs

1) Not serviceable.

2) A Continue-In-Service limit of 10 cycles is permitted for one crack 0.25 in. (6.35 mm) in length.

(c) Nicks, marks, and scratches

1) There is no limit to the number of nicks, marks, and scratches which are permitted with these conditions:

a) Not more than 1.0 in. (25.4 mm) in length

b) Not more than 0.02 in. (0.51 mm) in depth, after you remove the high metal

c) Minimum separation of 1.0 in. (25.4 mm) between areas of damage.

(d) Cracks in the rubber damper

1) Any amount is permitted.

SUBTASK 72-20-00-410-001-F00

(3) Do this task: Close the Fan Cowl Panels, AMM TASK 71-11-02-410-801-F00.

——— END OF TASK ———

BOEING PROPRIETARY - Copyright © Unpublished Work - See title page for details

DATE	TAIL NUMBER	STATION	AIRLINE CARD NO.	BOEING CARD NO.
				72-070-01-01

MECH	INSP

TASK 72-60-00-200-801-F00

2. Accessory Gearbox and Transfer Gearbox Mount Inspection

(Figure 1 and Figure 2)

A. General

(1) This is a visual check of the mounts on the transfer gearbox (TGB) housing and the accessory gearbox housing (AGB).

(2) The AGB is on the left side of the fan case and the TGB is at the 9:00 o'clock position on the fan frame.

B. Procedure

SUBTASK 72-60-00-210-001-F00

(1) Do this task: Open the Fan Cowl Panels, AMM TASK 71-11-02-010-801-F00.

SUBTASK 72-60-00-210-002-F00

(2) Do a visual check of the AGB clevis mounts for damage (Figure 1):

(a) If you find damage that is more than the limits, replace the engine, unless you are given other instructions.

These are the tasks:

Power Plant Removal, AMM TASK 71-00-02-000-801-F00,

Power Plant Installation, AMM TASK 71-00-02-400-801-F00.

(b) Cracks

1) Not serviceable.

(c) Loose bushing in the clevis mounts

1) Not permitted.

(d) Loose mount pin

1) Not permitted.

a) Tighten the mount pin if it is loose.

SUBTASK 72-60-00-210-003-F00

(3) Do a visual check of the TGB mounts for damage (Figure 2):

(a) If you find damage that is more than the limits, replace the TGB, unless you are given other instructions.

These are the tasks:

Transfer Gearbox Assembly Removal, AMM TASK 72-62-00-000-801-F00,

Transfer Gearbox Assembly Installation, AMM TASK 72-62-00-400-801-F00.

(b) Cracks

1) Not serviceable.

(c) Loose attachment bolts

1) Not permitted.

a) Tighten the attachment nut (AMM TASK 72-62-00-400-801-F00).

BOEING PROPRIETARY - Copyright © Unpublished Work - See title page for details

DATE	TAIL NUMBER	STATION	AIRLINE CARD NO.	BOEING CARD NO.
				72-070-01-01

MECH	INSP

SUBTASK 72-60-00-210-004-F00

(4) Do this task: Close the Fan Cowl Panels, AMM TASK 71-11-02-410-801-F00.

——— END OF TASK ———

BOEING PROPRIETARY - Copyright © Unpublished Work - See title page for details

DATE	TAIL NUMBER	STATION	AIRLINE CARD NO.	BOEING CARD NO.
				72-070-01-01

MECH	INSP

TASK 72-63-00-200-801-F00

3. Accessory Gearbox Inspection

(Figure 3)

A. General

(1) This is a visual inspection of the accessory gearbox (AGB) housing, clevis mounts, mount links, turnbuckle, and lockwire.

B. Procedure

SUBTASK 72-63-00-010-001-F00

(1) Do this task: Open the Fan Cowl Panels, AMM TASK 71-11-02-010-801-F00.

SUBTASK 72-63-00-210-001-F00

(2) If you find damage that is more than the limits, replace the AGB, unless you are given other instructions.

(a) These are the tasks:Accessory Gearbox Removal, AMM TASK 72-63-00-000-804-F00,

Accessory Gearbox Installation, AMM TASK 72-63-00-400-804-F00.

SUBTASK 72-63-00-210-006-F00

(3) Visually examine the mount fittings on the fan frame (Figure 3, Sheet 3):

(a) Cracks that extend from the bolt holes in the mount lugs

1) Not serviceable.

2) A Continue-In-Service limit of 10 cycles is permitted for one crack that goes through one mounting lug bolt hole, not more than 0.25 inch (6.35 mm) in length.

(b) Cracks in the areas of the mount lugs

1) Not serviceable.

2) A Continue-In-Service limit of 10 cycles is permitted for one crack 0.25 inch (6,35 mm) in length.

(c) Nicks, marks, and scratches

1) There is no limit to the number of nicks, marks, and scratches which are permitted with these conditions:

a) Not more than 1.0 inch (25.4 mm) in length

b) Not more than 0.02 inch (0.51 mm) in depth, after you remove the high metal

c) Minimum separation of 1.0 inch (25.4 mm) between areas of damage.

SUBTASK 72-63-00-210-002-F00

(4) Examine the AGB housing for damage:

NOTE: If you find AGB displacement while working on any of the AGB mounted equipment, it is recommended to do an inspection of the AGB mounts and rod links within the next 200 hours or 100 cycles.

(a) If you find AGB displacement when you do work on the AGB mount equipment, do this step:

BOEING PROPRIETARY - Copyright © Unpublished Work - See title page for details

1) It is recommended to do an inspection of the AGB mounts and rod links in the subsequent 200 hours or 100 cycles.

(b) Cracks

1) Not serviceable.

(c) Nicks, dents, or scratches

1) All damage is permitted with this limit:

a) Not more than 0.035 in. (0.89 mm) in depth after you remove the high metal.

SUBTASK 72-63-00-210-003-F00

(5) Examine the AGB clevis mounts for damage:

(a) Cracks

1) Not serviceable.

(b) Loose bushing in the clevis mounts

1) Not permitted.

(c) Loose mount pin

1) Not permitted.

a) Tighten the mount pin if it is necessary.

(d) Cracks or crazing in the AGB mount rubber are permitted.

(e) Eccentricity of the mounting pin axis relative to the axis of the outer bushing of the rubber damper.

1) Maximum Serviceable Limit: Maximum allowed eccentricity (half of the difference between the minimum and maximum clearance) is 0.06 in. (1.5 mm) (Figure 3, Sheet 4).

2) A continue in service limit of 10 cycles or 25 hours is permitted to replace the dampers (ESM repair), if there is no contact metal against metal.

SUBTASK 72-63-00-210-005-F00

(6) Examine the AGB upper and lower mount links, turnbuckle, and associated clevis for damage (Figure 4):

(a) Axial looseness of mount link or turnbuckle

1) Any amount is permitted if there is no contact between the mount links or turnbuckle extremity and associated clevis.

BOEING PROPRIETARY - Copyright © Unpublished Work - See title page for details

MECH	INSP

CAUTION: THE MOUNT LINKS OR TURNBUCKLES SURFACES MUST BE PARALLEL AS FAR AS POSSIBLE TO THE CLEVIS SURFACES DURING THE CLEARANCE CHECK. DO NOT ROTATE THE ROD LINK OR TURNBUCKLE. THE CLEARANCE CHECK MUST BE DONE AT THE EXTREMITY OF THE LINKS. AN INCORRECT CHECK CAN LEAD TO EQUIPMENT DAMAGE.

(b) If a mount link or turnbuckle extremity is in contact with the AGB or engine clevis, 500 cycles operation maximum in service extension is permitted before you do the installation of a damper.

NOTE: On engine POST CFM56-7B-SB 72-0465, you already have a damper at each link end.

1) Do these tasks for each link to replace the dampers:

a) Axial Link End Dampers Removal, AMM TASK 72-63-00-000-802-F00.,

b) Axial Link End Dampers Installation, AMM TASK 72-63-00-400-802-F00.

(c) For the AGB and engine clevis of the mount links

1) Impacts, marks, wear or fretting

a) Any amount permitted if less than 0.008 in. (0.2 mm) in depth.

(d) For the AGB upper and lower mount links, turnbuckle (if removed during damper installation). (Figure 4, Sheet 2)

1) Spherical bearing axial wear

a) Dim X = 0.1799 inch max (4.57 mm)

2) Spherical bearing radial wear

a) Any amount

3) Ball groove and corrosion

a) Any amount

4) External ring with missing lubricating lining

a) Any amount

5) External ring tears

a) Not serviceable

6) If you find damage that is more than the limits, replace the axial link end(s) or the mount link.

a) These are the tasks:Axial Link End or Upper (Lower) Mount Link Removal, AMM TASK 72-63-00-000-803-F00

Axial Link End or Upper (Lower) Mount Link Installation, AMM TASK 72-63-00-400-803-F00.

<1> This task includes an adjustment of the AGB position.

SUBTASK 72-63-00-212-001-F00

(7) Examine the axial link ends dampers for damage (Figure 4):

NOTE: You must do this procedure only for engine POST CFM56-7B-SB 72-0465.

(a) Tears, cut.

BOEING PROPRIETARY - Copyright © Unpublished Work - See title page for details

DATE	TAIL NUMBER	STATION	AIRLINE CARD NO.	BOEING CARD NO.
				72-070-01-01

MECH	INSP

1) Any amount is permitted.

(b) Missing dampers straps.

1) Any amount is permitted.

SUBTASK 72-63-00-210-004-F00

(8) Look for damage to the lockwire:

(a) Broken, missing or loose lockwire

1) Not permitted.

a) Do this task: Lockwire Installation, AMM TASK 70-20-01-800-804-F00.

SUBTASK 72-63-00-410-001-F00

(9) Do this task: Close the Fan Cowl Panels, AMM TASK 71-11-02-410-801-F00.

——— END OF TASK ———

BOEING PROPRIETARY - Copyright © Unpublished Work - See title page for details

DATE	TAIL NUMBER	STATION	AIRLINE CARD NO.	BOEING CARD NO.
				72-070-01-01

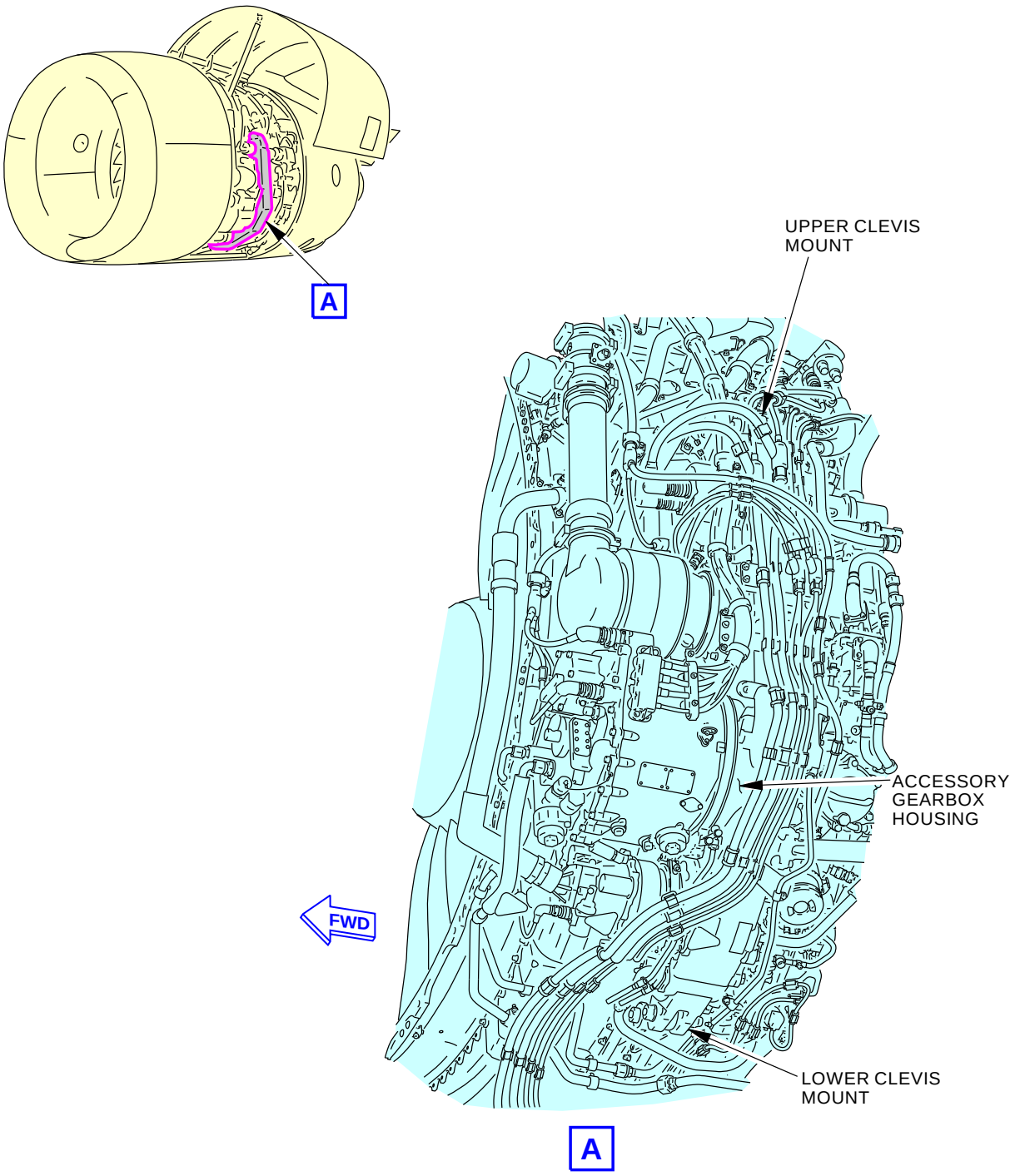

G28311 S0006582533_V2

Accessory Gearbox Inspection
Figure 1

BOEING PROPRIETARY - Copyright © Unpublished Work - See title page for details

DATE	TAIL NUMBER	STATION	AIRLINE CARD NO.	BOEING CARD NO.
				72-070-01-01

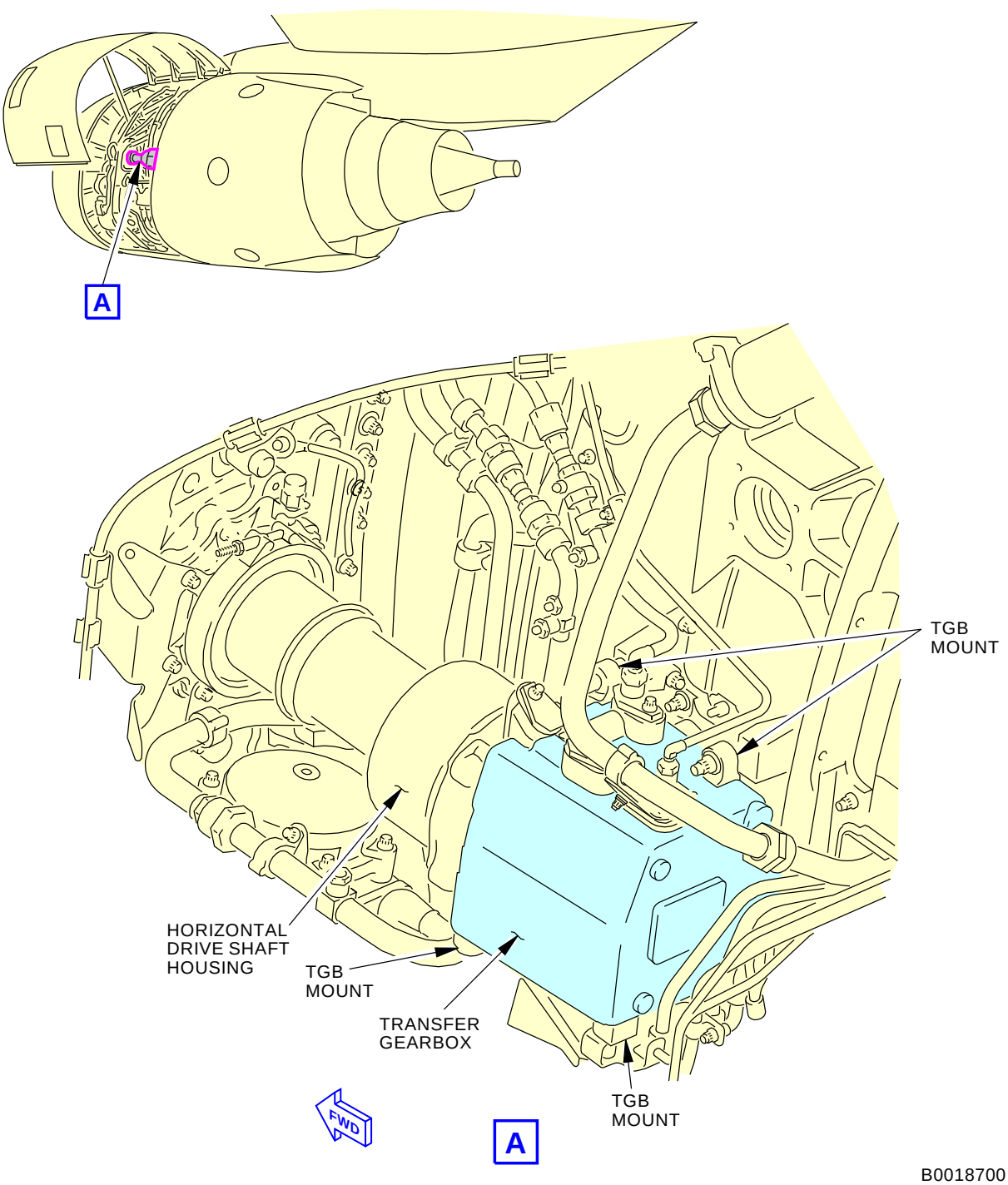

B0018700
G28331 S0006582534_V3

Transfer Gearbox Inspection
Figure 2

BOEING PROPRIETARY - Copyright © Unpublished Work - See title page for details

DATE	TAIL NUMBER	STATION	AIRLINE CARD NO.	BOEING CARD NO.
				72-070-01-01

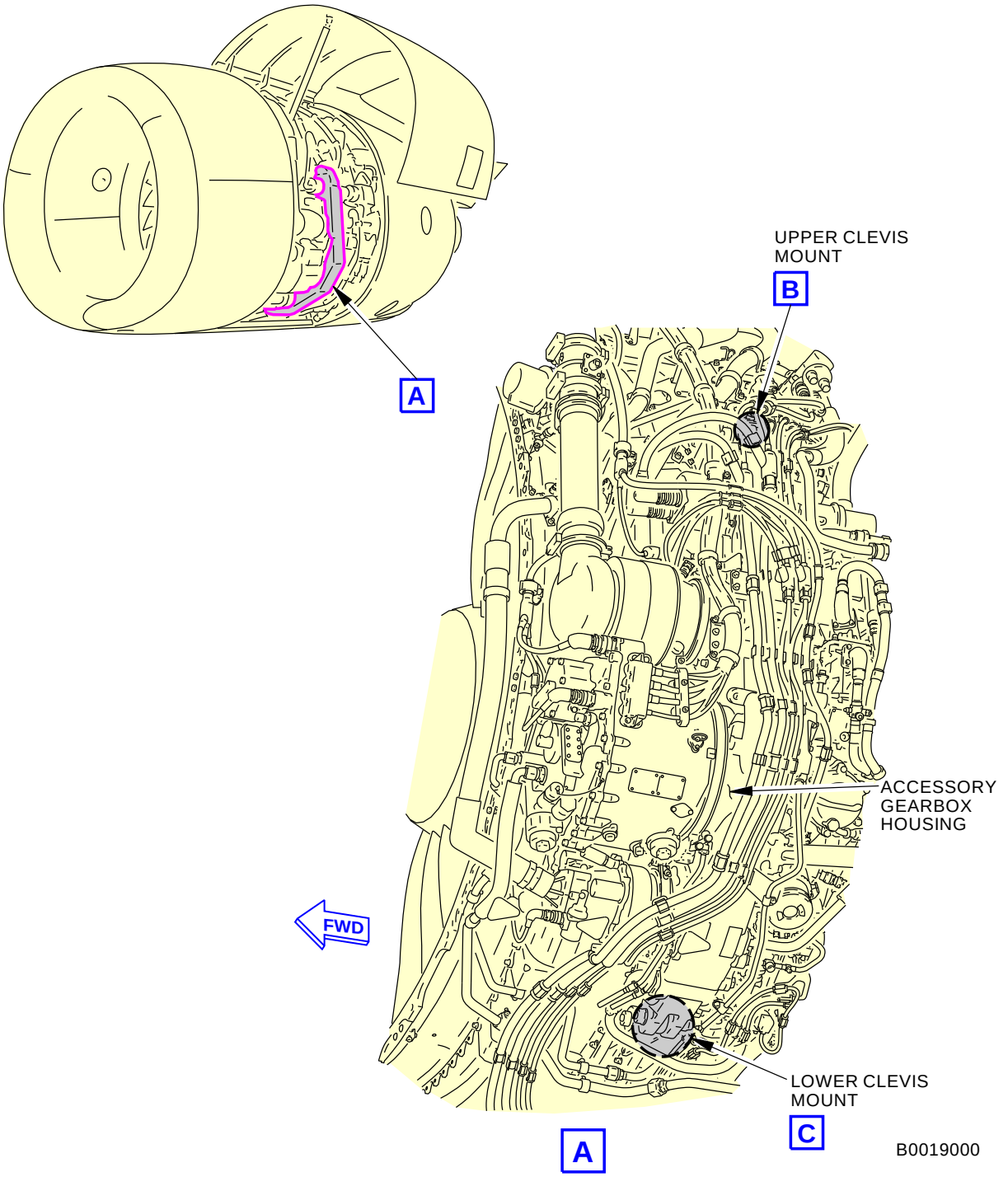

Accessory Gearbox Inspection
Figure 3 (Sheet 1 of 4)

BOEING PROPRIETARY - Copyright © Unpublished Work - See title page for details

DATE	TAIL NUMBER	STATION	AIRLINE CARD NO.	BOEING CARD NO.
				72-070-01-01

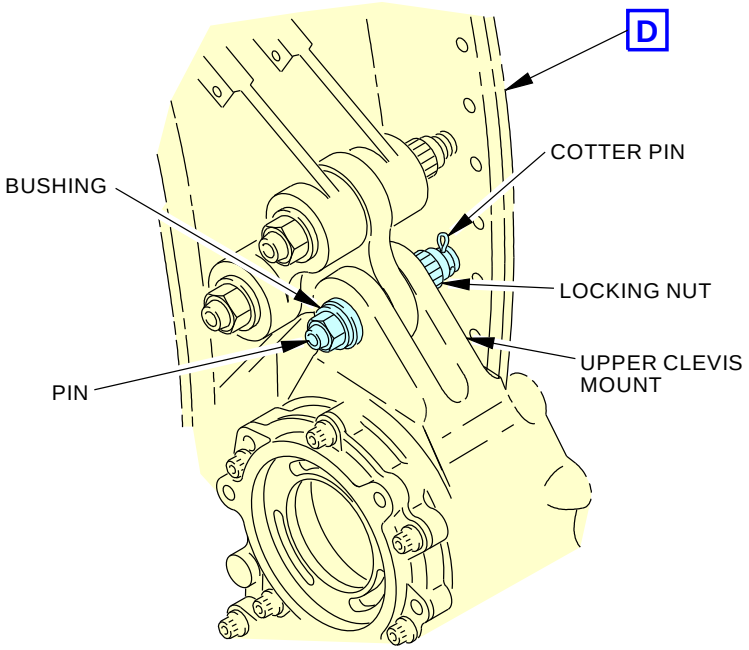

B

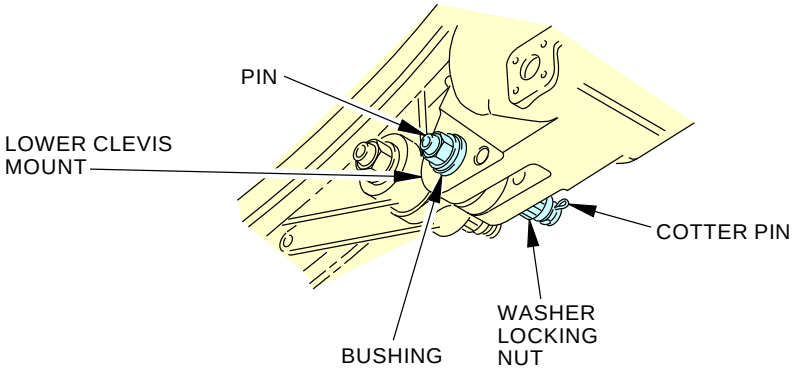

C

MM-00191-00-B

W11594 S0006582555_V3

Accessory Gearbox Inspection
Figure 3 (Sheet 2 of 4)

BOEING PROPRIETARY - Copyright © Unpublished Work - See title page for details

DATE	TAIL NUMBER	STATION	AIRLINE CARD NO.	BOEING CARD NO.
				72-070-01-01

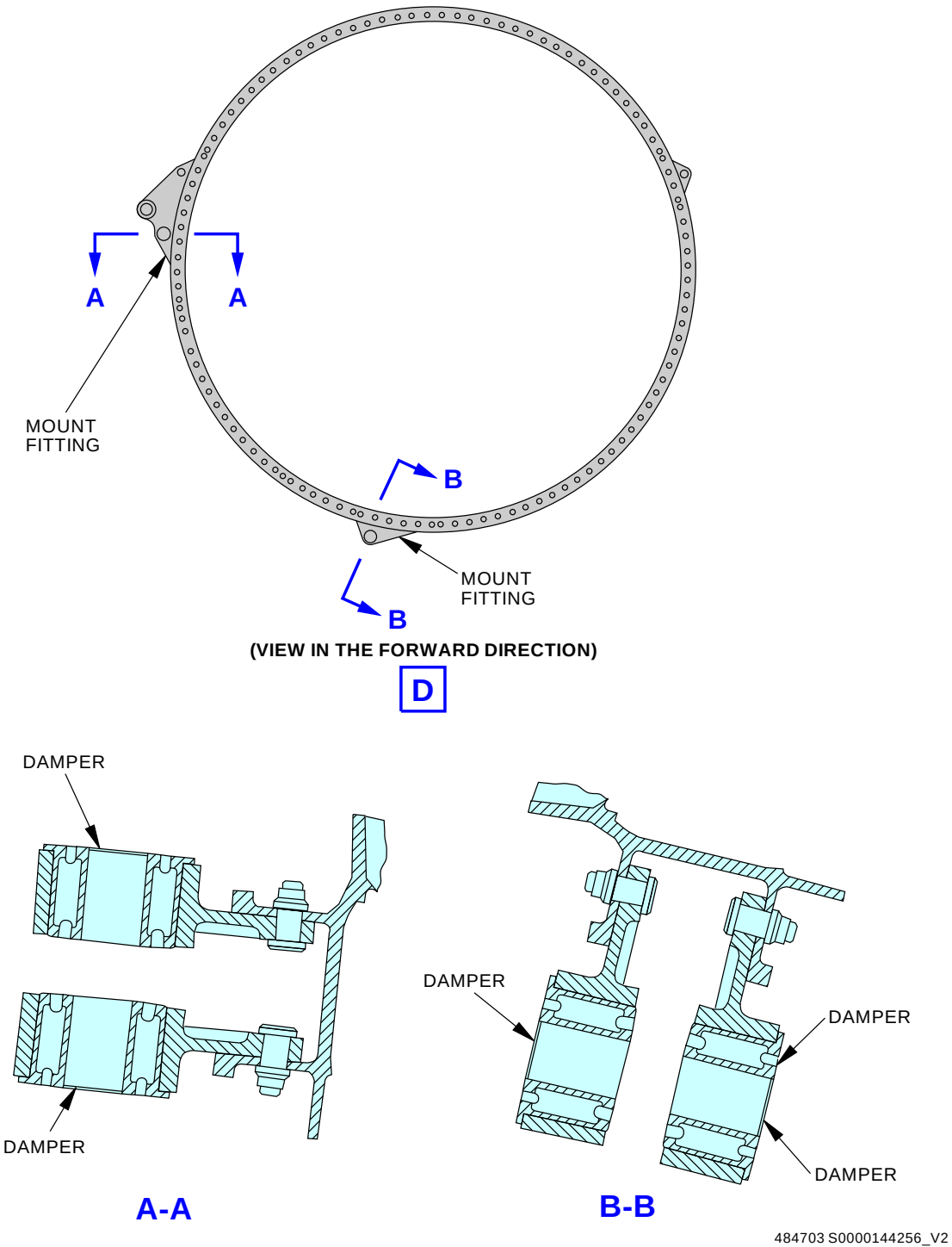

Accessory Gearbox Inspection
Figure 3 (Sheet 3 of 4)

BOEING PROPRIETARY - Copyright © Unpublished Work - See title page for details

DATE	TAIL NUMBER	STATION	AIRLINE CARD NO.	BOEING CARD NO.
				72-070-01-01

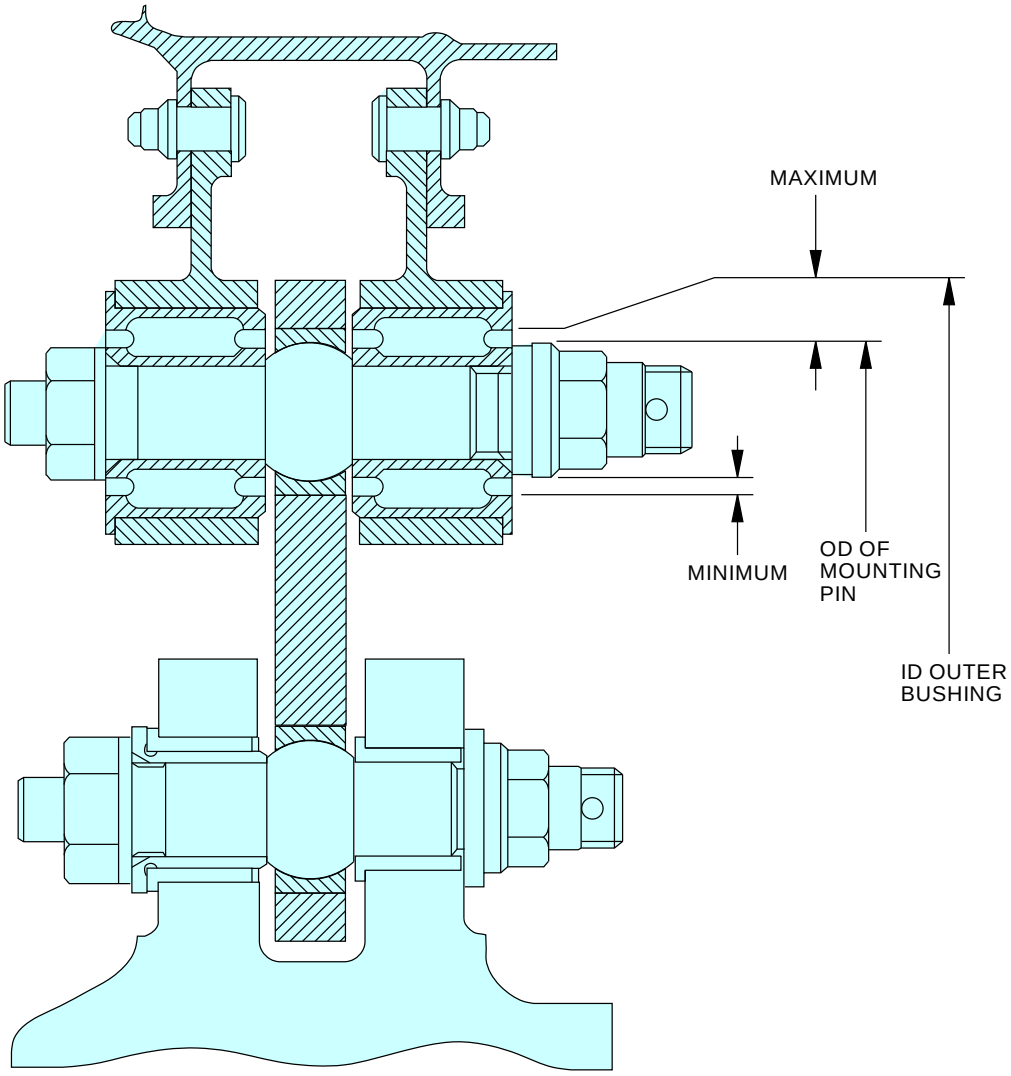

1507470 S0000275872_V2

Accessory Gearbox Inspection
Figure 3 (Sheet 4 of 4)

BOEING PROPRIETARY - Copyright © Unpublished Work - See title page for details

DATE	TAIL NUMBER	STATION	AIRLINE CARD NO.	BOEING CARD NO.
				72-070-01-01

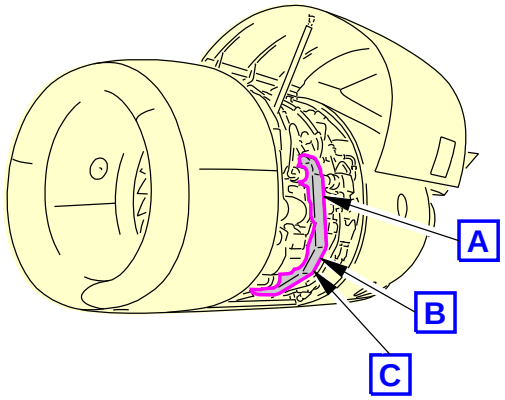

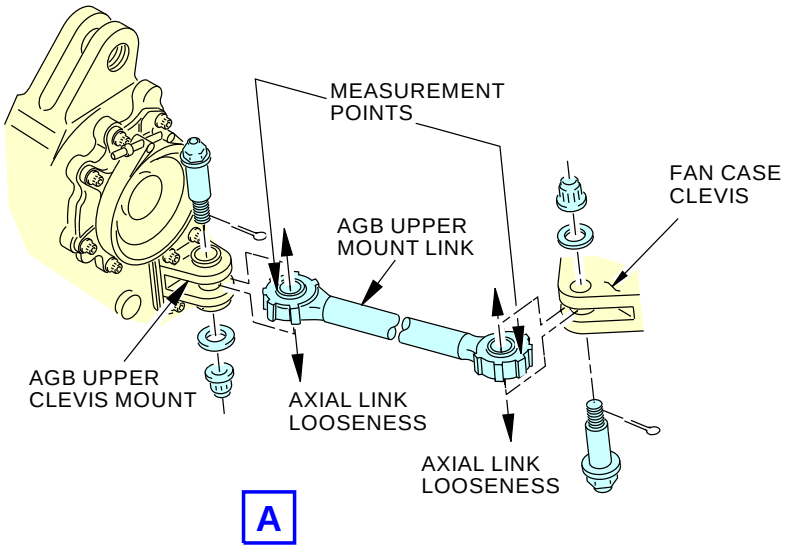

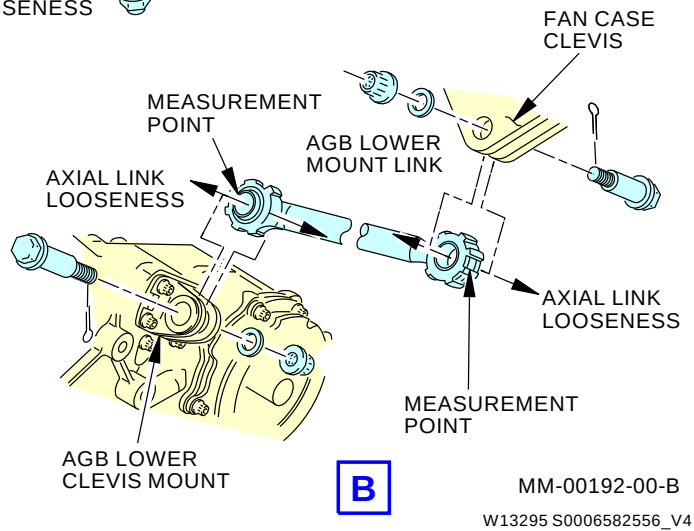

Accessory Gearbox Mounts Inspection
Figure 4 (Sheet 1 of 2)

BOEING PROPRIETARY - Copyright © Unpublished Work - See title page for details

DATE	TAIL NUMBER	STATION	AIRLINE CARD NO.	BOEING CARD NO.
				72-070-01-01

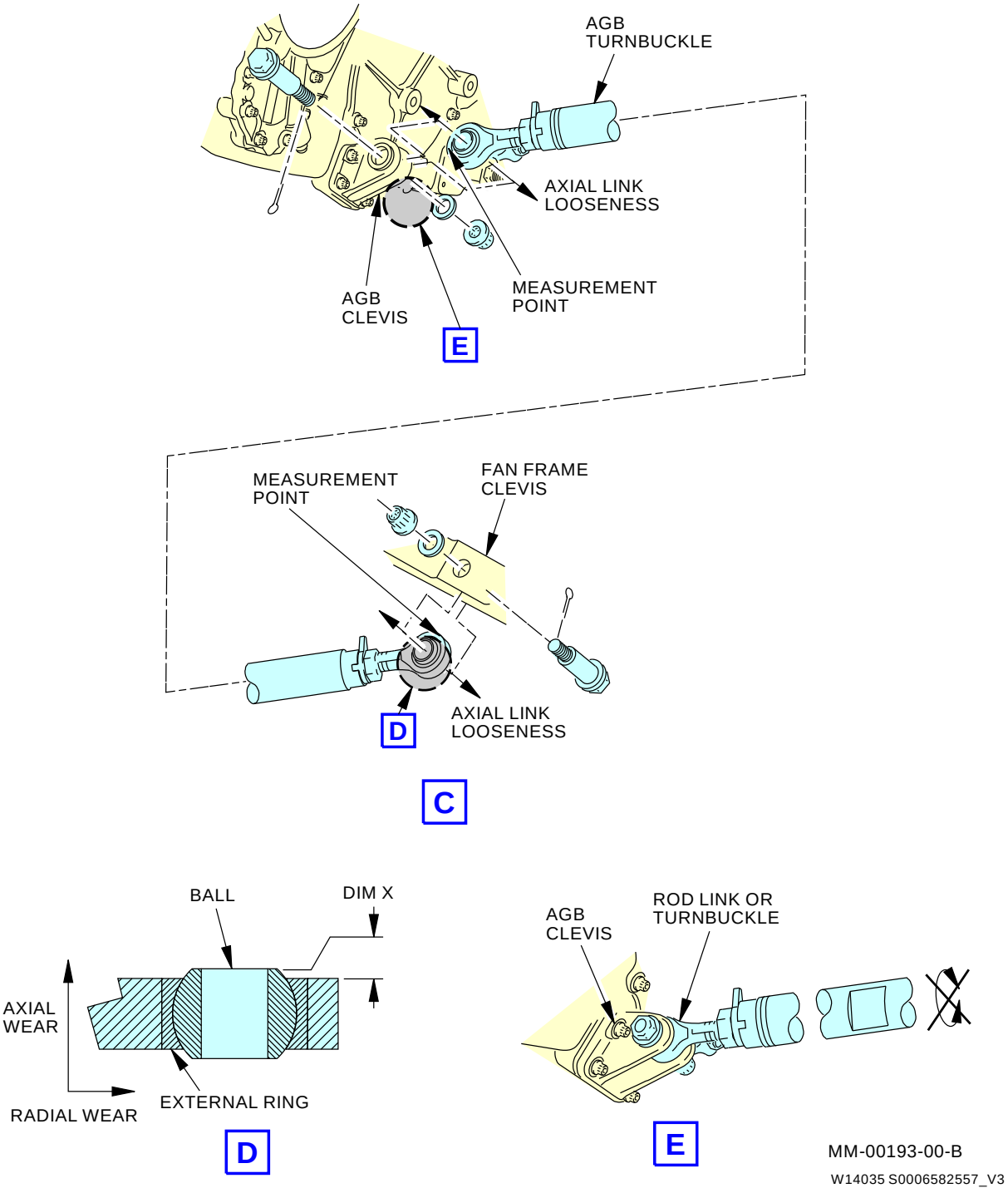

Accessory Gearbox Mounts Inspection
Figure 4 (Sheet 2 of 2)

BOEING PROPRIETARY - Copyright © Unpublished Work - See title page for details

AIRLINE CARD NO		TITLE			BOEING CARD NO.
		RIGHT ENGINE AGB/TGB MOUNT FLANGES AND FAN CASE/FRAME MOUNTS			72-070-02-01
DATE	TASK VISUAL CHECK				RELATED CARD
TAIL NUMBER	WORK AREA RIGHT ENGINE	VERSION 1.1	THRESHOLD 15000 FH	REPEAT 15000 FH	APPLICABILITY AIRPLANE: ALL ENGINE: ALL
STATION	SKILL AIRPL				
		ACCESS 423 424			ZONE 421

Visual check of the right engine accessory gearbox/transfer gearbox mount flanges and fan case and fan frame attachment mounts.

A. References

Reference	Title
AMM 70-20-01-800-804-F00	Lockwire Installation (P/B 201)
AMM 71-00-02-000-801-F00	Power Plant Removal (P/B 401)
AMM 71-00-02-400-801-F00	Power Plant Installation (P/B 401)
AMM 71-11-02-010-801-F00	Open the Fan Cowl Panels (P/B 201)
AMM 71-11-02-410-801-F00	Close the Fan Cowl Panels (P/B 201)
AMM 72-62-00-000-801-F00	Transfer Gearbox Assembly Removal (P/B 401)
AMM 72-62-00-400-801-F00	Transfer Gearbox Assembly Installation (P/B 401)
AMM 72-63-00-000-802-F00	Axial Link End Dampers Removal (P/B 201)
AMM 72-63-00-000-803-F00	Axial Link End or Upper (Lower) Mount Link Removal (P/B 201)
AMM 72-63-00-000-804-F00	Accessory Gearbox Removal (P/B 401)
AMM 72-63-00-400-802-F00	Axial Link End Dampers Installation (P/B 201)
AMM 72-63-00-400-803-F00	Axial Link End or Upper (Lower) Mount Link Installation (P/B 201)
AMM 72-63-00-400-804-F00	Accessory Gearbox Installation (P/B 401)

BOEING PROPRIETARY - Copyright © Unpublished Work - See title page for details

DATE	TAIL NUMBER	STATION	AIRLINE CARD NO.	BOEING CARD NO.
				72-070-02-01

MECH	INSP

TASK 72-20-00-210-801-F00

1. TGB and AGB Mount Lugs Inspection (Visual Check)

A. General

(1) This task is a visual check of the mount lugs on the fan frame and case which hold the transfer gearbox (TGB) and accessory gearbox (AGB). This is a scheduled maintenance task.

(2) The TGB is attached to the fan frame at approximately the 9:00 o'clock position. The AGB is attached on the left side of the fan case.

B. Procedure

SUBTASK 72-20-00-010-001-F00

(1) Do this task: Open the Fan Cowl Panels, AMM TASK 71-11-02-010-801-F00.

SUBTASK 72-20-00-210-001-F00

(2) Visually examine the mount lugs on the fan frame which hold the TGB and the mount lugs on the fan case which hold the AGB for damage:

(a) Cracks that extend from the bolt holes in the mount lugs

1) Not serviceable.

2) A Continue-In-Service limit of 10 cycles is permitted for one crack that goes through one mounting lug bolt hole, not more than 0.25 in. (6.35 mm) in length.

(b) Cracks in the areas of the mount lugs

1) Not serviceable.

2) A Continue-In-Service limit of 10 cycles is permitted for one crack 0.25 in. (6.35 mm) in length.

(c) Nicks, marks, and scratches

1) There is no limit to the number of nicks, marks, and scratches which are permitted with these conditions:

a) Not more than 1.0 in. (25.4 mm) in length

b) Not more than 0.02 in. (0.51 mm) in depth, after you remove the high metal

c) Minimum separation of 1.0 in. (25.4 mm) between areas of damage.

(d) Cracks in the rubber damper

1) Any amount is permitted.

SUBTASK 72-20-00-410-001-F00

(3) Do this task: Close the Fan Cowl Panels, AMM TASK 71-11-02-410-801-F00.

——— END OF TASK ———

BOEING PROPRIETARY - Copyright © Unpublished Work - See title page for details

DATE	TAIL NUMBER	STATION	AIRLINE CARD NO.	BOEING CARD NO.
				72-070-02-01

MECH	INSP

TASK 72-60-00-200-801-F00

2. Accessory Gearbox and Transfer Gearbox Mount Inspection

(Figure 1 and Figure 2)

A. General

(1) This is a visual check of the mounts on the transfer gearbox (TGB) housing and the accessory gearbox housing (AGB).

(2) The AGB is on the left side of the fan case and the TGB is at the 9:00 o'clock position on the fan frame.

B. Procedure

SUBTASK 72-60-00-210-001-F00

(1) Do this task: Open the Fan Cowl Panels, AMM TASK 71-11-02-010-801-F00.

SUBTASK 72-60-00-210-002-F00

(2) Do a visual check of the AGB clevis mounts for damage (Figure 1):

(a) If you find damage that is more than the limits, replace the engine, unless you are given other instructions.

These are the tasks:

Power Plant Removal, AMM TASK 71-00-02-000-801-F00,

Power Plant Installation, AMM TASK 71-00-02-400-801-F00.

(b) Cracks

1) Not serviceable.

(c) Loose bushing in the clevis mounts

1) Not permitted.

(d) Loose mount pin

1) Not permitted.

a) Tighten the mount pin if it is loose.

SUBTASK 72-60-00-210-003-F00

(3) Do a visual check of the TGB mounts for damage (Figure 2):

(a) If you find damage that is more than the limits, replace the TGB, unless you are given other instructions.

These are the tasks:

Transfer Gearbox Assembly Removal, AMM TASK 72-62-00-000-801-F00,

Transfer Gearbox Assembly Installation, AMM TASK 72-62-00-400-801-F00.

(b) Cracks

1) Not serviceable.

(c) Loose attachment bolts

1) Not permitted.

a) Tighten the attachment nut (AMM TASK 72-62-00-400-801-F00).

BOEING PROPRIETARY - Copyright © Unpublished Work - See title page for details

DATE	TAIL NUMBER	STATION	AIRLINE CARD NO.	BOEING CARD NO.
				72-070-02-01

MECH	INSP

SUBTASK 72-60-00-210-004-F00

(4) Do this task: Close the Fan Cowl Panels, AMM TASK 71-11-02-410-801-F00.

——— END OF TASK ———

BOEING PROPRIETARY - Copyright © Unpublished Work - See title page for details

TASK 72-63-00-200-801-F00

MECH	INSP

3. Accessory Gearbox Inspection

(Figure 3)

A. General

(1) This is a visual inspection of the accessory gearbox (AGB) housing, clevis mounts, mount links, turnbuckle, and lockwire.

B. Procedure

SUBTASK 72-63-00-010-001-F00

(1) Do this task: Open the Fan Cowl Panels, AMM TASK 71-11-02-010-801-F00.

SUBTASK 72-63-00-210-001-F00

(2) If you find damage that is more than the limits, replace the AGB, unless you are given other instructions.

(a) These are the tasks:Accessory Gearbox Removal, AMM TASK 72-63-00-000-804-F00,

Accessory Gearbox Installation, AMM TASK 72-63-00-400-804-F00.

SUBTASK 72-63-00-210-006-F00

(3) Visually examine the mount fittings on the fan frame (Figure 3, Sheet 3):

(a) Cracks that extend from the bolt holes in the mount lugs

1) Not serviceable.

2) A Continue-In-Service limit of 10 cycles is permitted for one crack that goes through one mounting lug bolt hole, not more than 0.25 inch (6.35 mm) in length.

(b) Cracks in the areas of the mount lugs

1) Not serviceable.

2) A Continue-In-Service limit of 10 cycles is permitted for one crack 0.25 inch (6,35 mm) in length.

(c) Nicks, marks, and scratches

1) There is no limit to the number of nicks, marks, and scratches which are permitted with these conditions:

a) Not more than 1.0 inch (25.4 mm) in length

b) Not more than 0.02 inch (0.51 mm) in depth, after you remove the high metal

c) Minimum separation of 1.0 inch (25.4 mm) between areas of damage.

SUBTASK 72-63-00-210-002-F00

(4) Examine the AGB housing for damage:

NOTE: If you find AGB displacement while working on any of the AGB mounted equipment, it is recommended to do an inspection of the AGB mounts and rod links within the next 200 hours or 100 cycles.

(a) If you find AGB displacement when you do work on the AGB mount equipment, do this step:

BOEING PROPRIETARY - Copyright © Unpublished Work - See title page for details

MECH	INSP

1) It is recommended to do an inspection of the AGB mounts and rod links in the subsequent 200 hours or 100 cycles.

(b) Cracks

1) Not serviceable.

(c) Nicks, dents, or scratches

1) All damage is permitted with this limit:

a) Not more than 0.035 in. (0.89 mm) in depth after you remove the high metal.

SUBTASK 72-63-00-210-003-F00

(5) Examine the AGB clevis mounts for damage:

(a) Cracks

1) Not serviceable.

(b) Loose bushing in the clevis mounts

1) Not permitted.

(c) Loose mount pin

1) Not permitted.

a) Tighten the mount pin if it is necessary.

(d) Cracks or crazing in the AGB mount rubber are permitted.

(e) Eccentricity of the mounting pin axis relative to the axis of the outer bushing of the rubber damper.

1) Maximum Serviceable Limit: Maximum allowed eccentricity (half of the difference between the minimum and maximum clearance) is 0.06 in. (1.5 mm) (Figure 3, Sheet 4).

2) A continue in service limit of 10 cycles or 25 hours is permitted to replace the dampers (ESM repair), if there is no contact metal against metal.

SUBTASK 72-63-00-210-005-F00

(6) Examine the AGB upper and lower mount links, turnbuckle, and associated clevis for damage (Figure 4):

(a) Axial looseness of mount link or turnbuckle

1) Any amount is permitted if there is no contact between the mount links or turnbuckle extremity and associated clevis.

BOEING PROPRIETARY - Copyright © Unpublished Work - See title page for details

MECH	INSP

CAUTION: THE MOUNT LINKS OR TURNBUCKLES SURFACES MUST BE PARALLEL AS FAR AS POSSIBLE TO THE CLEVIS SURFACES DURING THE CLEARANCE CHECK. DO NOT ROTATE THE ROD LINK OR TURNBUCKLE. THE CLEARANCE CHECK MUST BE DONE AT THE EXTREMITY OF THE LINKS. AN INCORRECT CHECK CAN LEAD TO EQUIPMENT DAMAGE.

(b) If a mount link or turnbuckle extremity is in contact with the AGB or engine clevis, 500 cycles operation maximum in service extension is permitted before you do the installation of a damper.

NOTE: On engine POST CFM56-7B-SB 72-0465, you already have a damper at each link end.

1) Do these tasks for each link to replace the dampers:

a) Axial Link End Dampers Removal, AMM TASK 72-63-00-000-802-F00.,

b) Axial Link End Dampers Installation, AMM TASK 72-63-00-400-802-F00.

(c) For the AGB and engine clevis of the mount links

1) Impacts, marks, wear or fretting

a) Any amount permitted if less than 0.008 in. (0.2 mm) in depth.

(d) For the AGB upper and lower mount links, turnbuckle (if removed during damper installation). (Figure 4, Sheet 2)

1) Spherical bearing axial wear

a) Dim X = 0.1799 inch max (4.57 mm)

2) Spherical bearing radial wear

a) Any amount

3) Ball groove and corrosion

a) Any amount

4) External ring with missing lubricating lining

a) Any amount

5) External ring tears

a) Not serviceable

6) If you find damage that is more than the limits, replace the axial link end(s) or the mount link.

a) These are the tasks:Axial Link End or Upper (Lower) Mount Link Removal, AMM TASK 72-63-00-000-803-F00

Axial Link End or Upper (Lower) Mount Link Installation, AMM TASK 72-63-00-400-803-F00.

<1> This task includes an adjustment of the AGB position.

SUBTASK 72-63-00-212-001-F00

(7) Examine the axial link ends dampers for damage (Figure 4):

NOTE: You must do this procedure only for engine POST CFM56-7B-SB 72-0465.

(a) Tears, cut.

BOEING PROPRIETARY - Copyright © Unpublished Work - See title page for details

MECH	INSP

1) Any amount is permitted.

(b) Missing dampers straps.

1) Any amount is permitted.

SUBTASK 72-63-00-210-004-F00

(8) Look for damage to the lockwire:

(a) Broken, missing or loose lockwire

1) Not permitted.

a) Do this task: Lockwire Installation, AMM TASK 70-20-01-800-804-F00.

SUBTASK 72-63-00-410-001-F00

(9) Do this task: Close the Fan Cowl Panels, AMM TASK 71-11-02-410-801-F00.

——— END OF TASK ———

BOEING PROPRIETARY - Copyright © Unpublished Work - See title page for details

DATE	TAIL NUMBER	STATION	AIRLINE CARD NO.	BOEING CARD NO.
				72-070-02-01

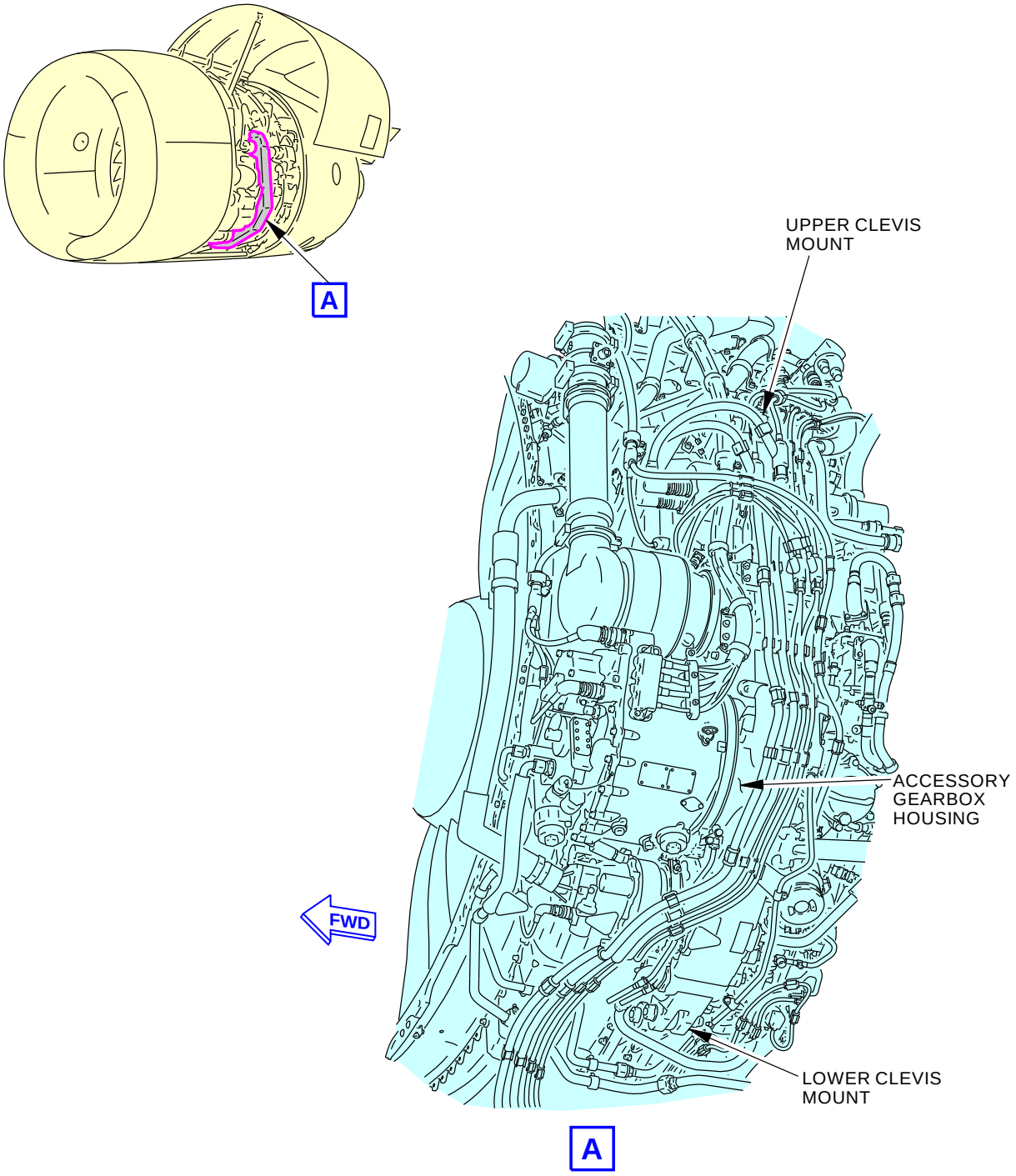

G28311 S0006582533_V2

Accessory Gearbox Inspection
Figure 1

BOEING PROPRIETARY - Copyright © Unpublished Work - See title page for details

DATE	TAIL NUMBER	STATION	AIRLINE CARD NO.	BOEING CARD NO.
				72-070-02-01

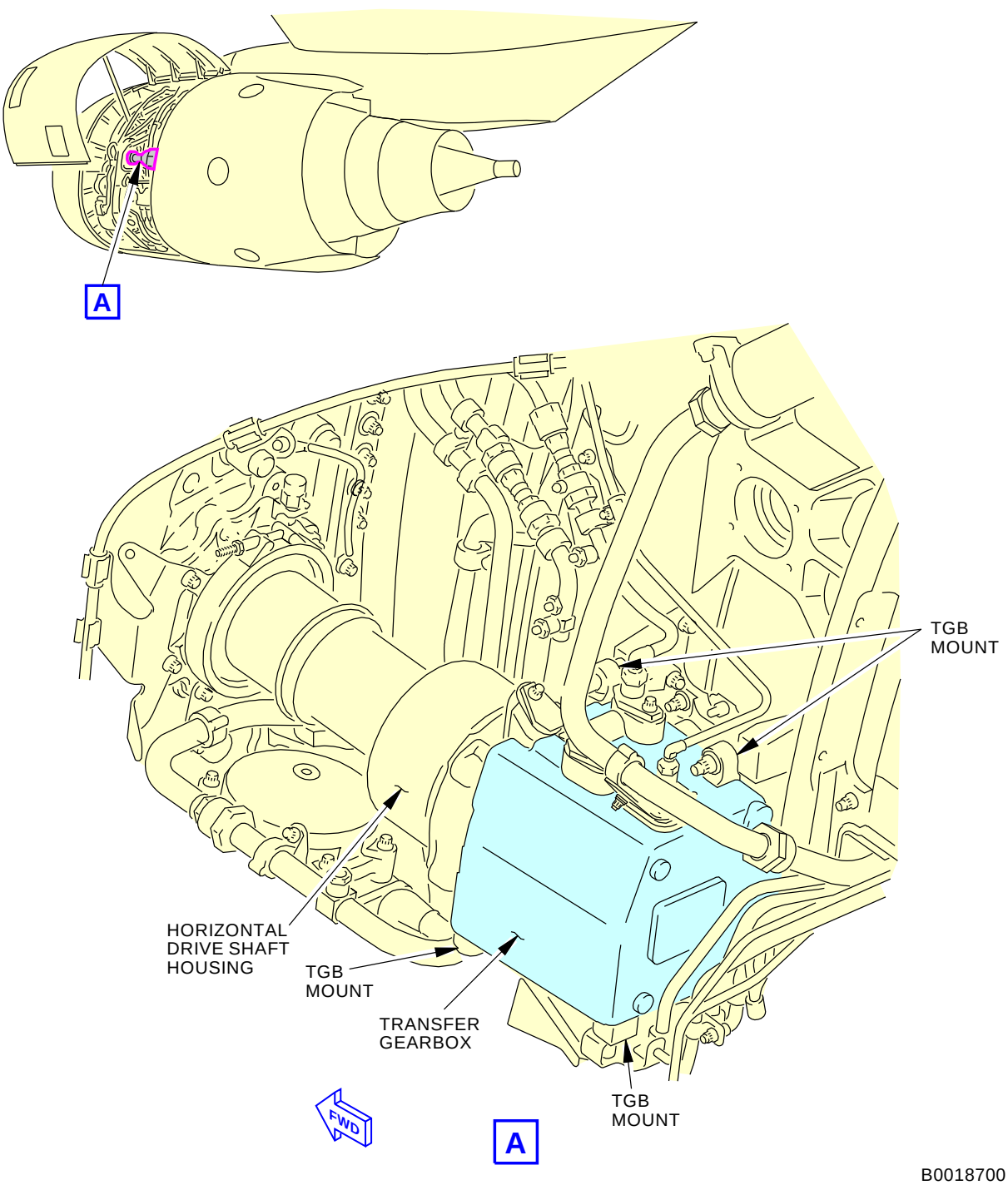

B0018700
G28331 S0006582534_V3

Transfer Gearbox Inspection
Figure 2

BOEING PROPRIETARY - Copyright © Unpublished Work - See title page for details

DATE	TAIL NUMBER	STATION	AIRLINE CARD NO.	BOEING CARD NO.
				72-070-02-01

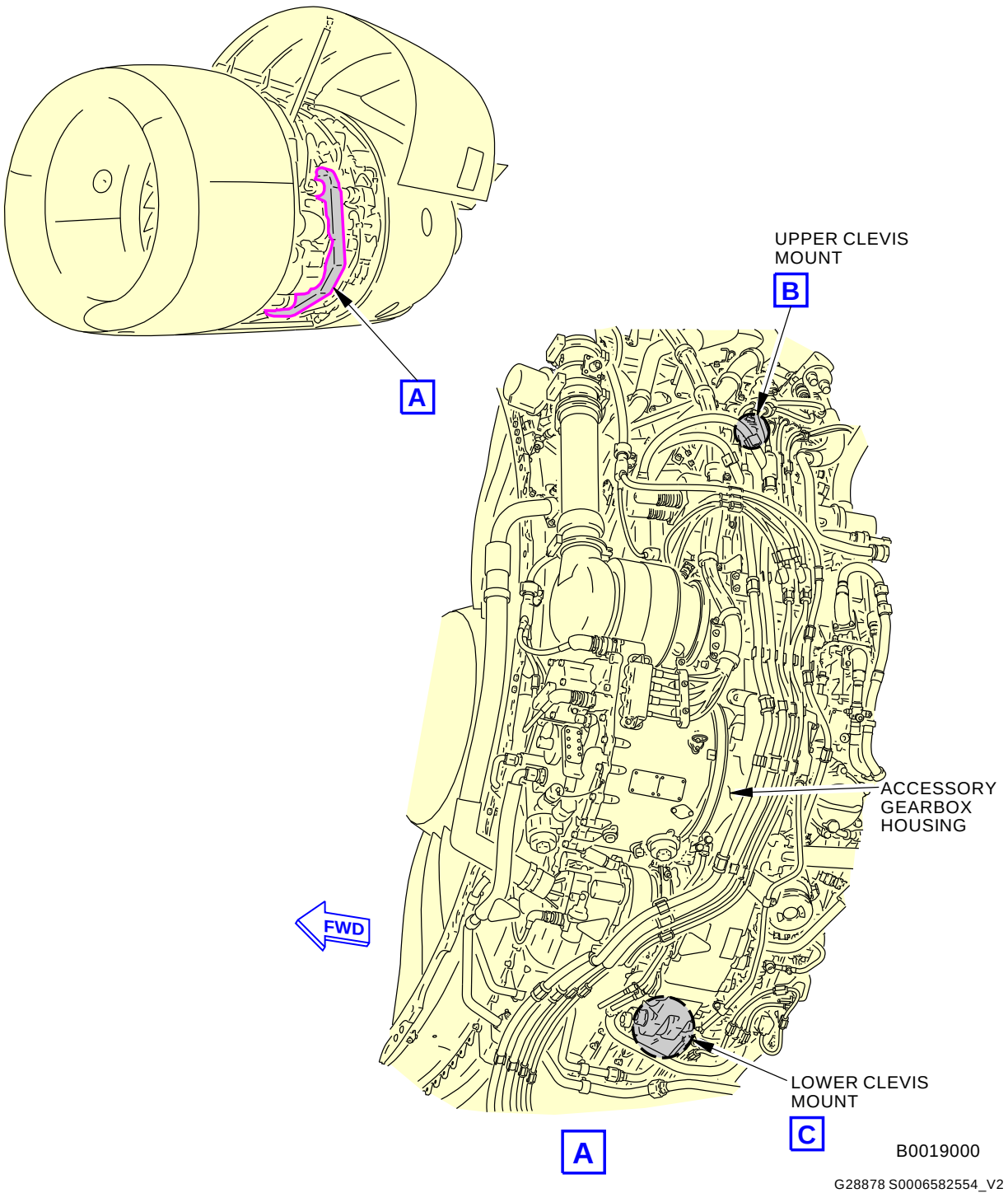

Accessory Gearbox Inspection
Figure 3 (Sheet 1 of 4)

BOEING PROPRIETARY - Copyright © Unpublished Work - See title page for details

DATE	TAIL NUMBER	STATION	AIRLINE CARD NO.	BOEING CARD NO.
				72-070-02-01

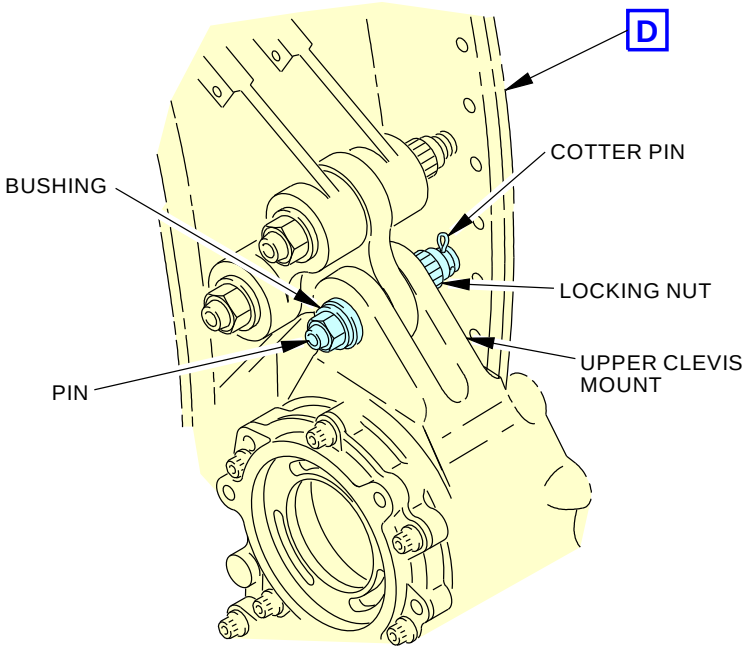

B

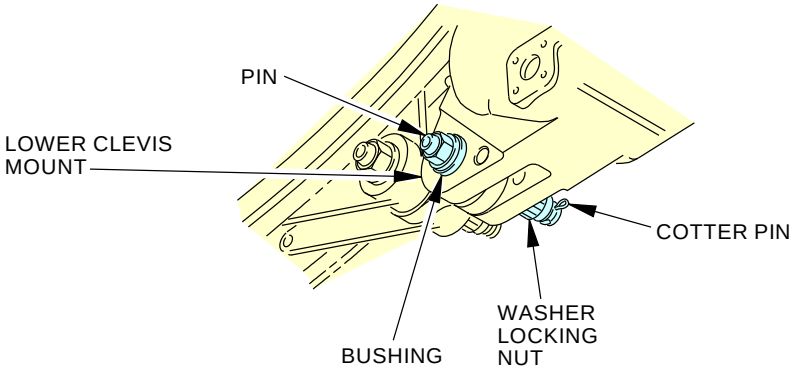

C

MM-00191-00-B

W11594 S0006582555_V3

Accessory Gearbox Inspection
Figure 3 (Sheet 2 of 4)

BOEING PROPRIETARY - Copyright © Unpublished Work - See title page for details

DATE	TAIL NUMBER	STATION	AIRLINE CARD NO.	BOEING CARD NO.
				72-070-02-01

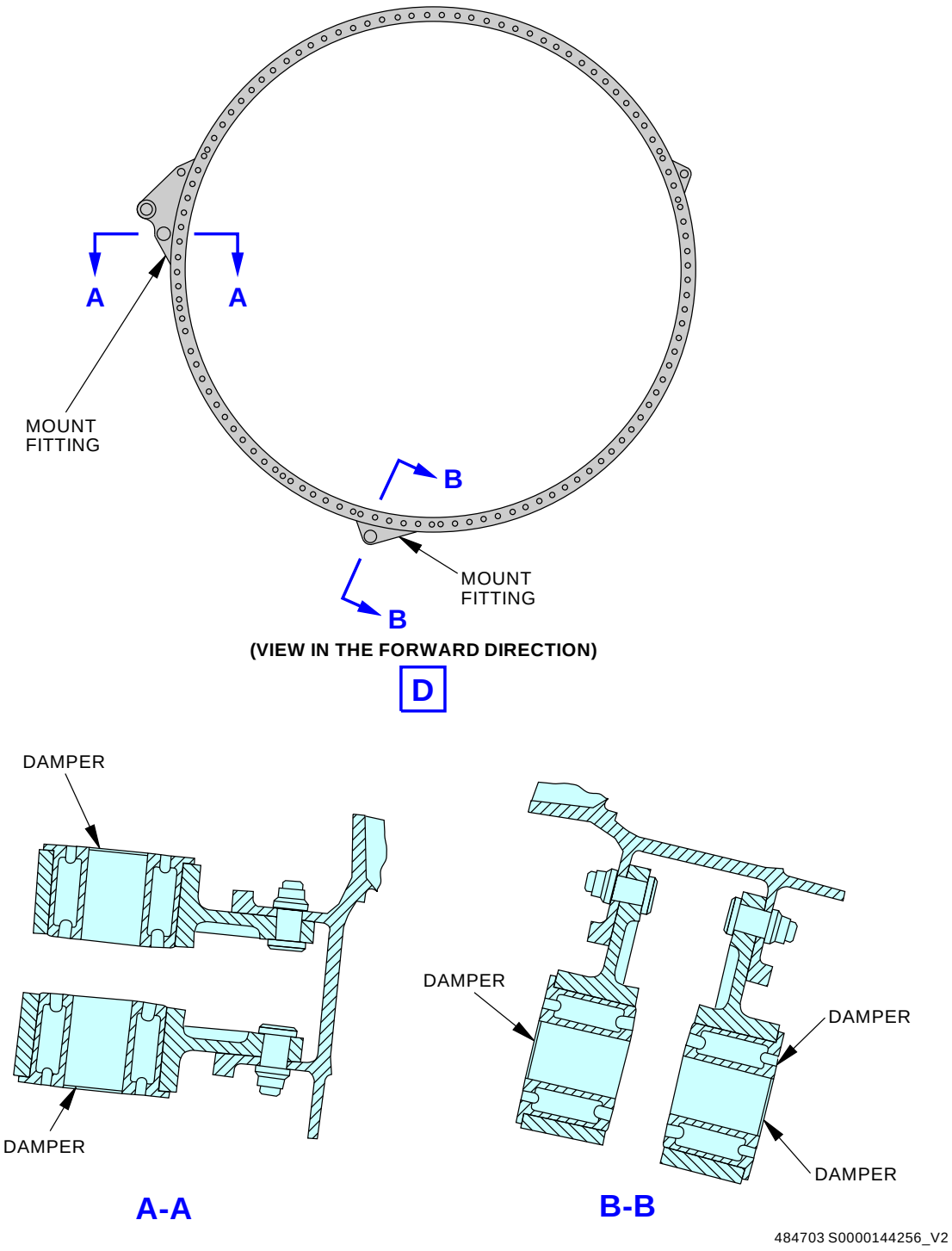

Accessory Gearbox Inspection
Figure 3 (Sheet 3 of 4)

BOEING PROPRIETARY - Copyright © Unpublished Work - See title page for details

DATE	TAIL NUMBER	STATION	AIRLINE CARD NO.	BOEING CARD NO.
				72-070-02-01

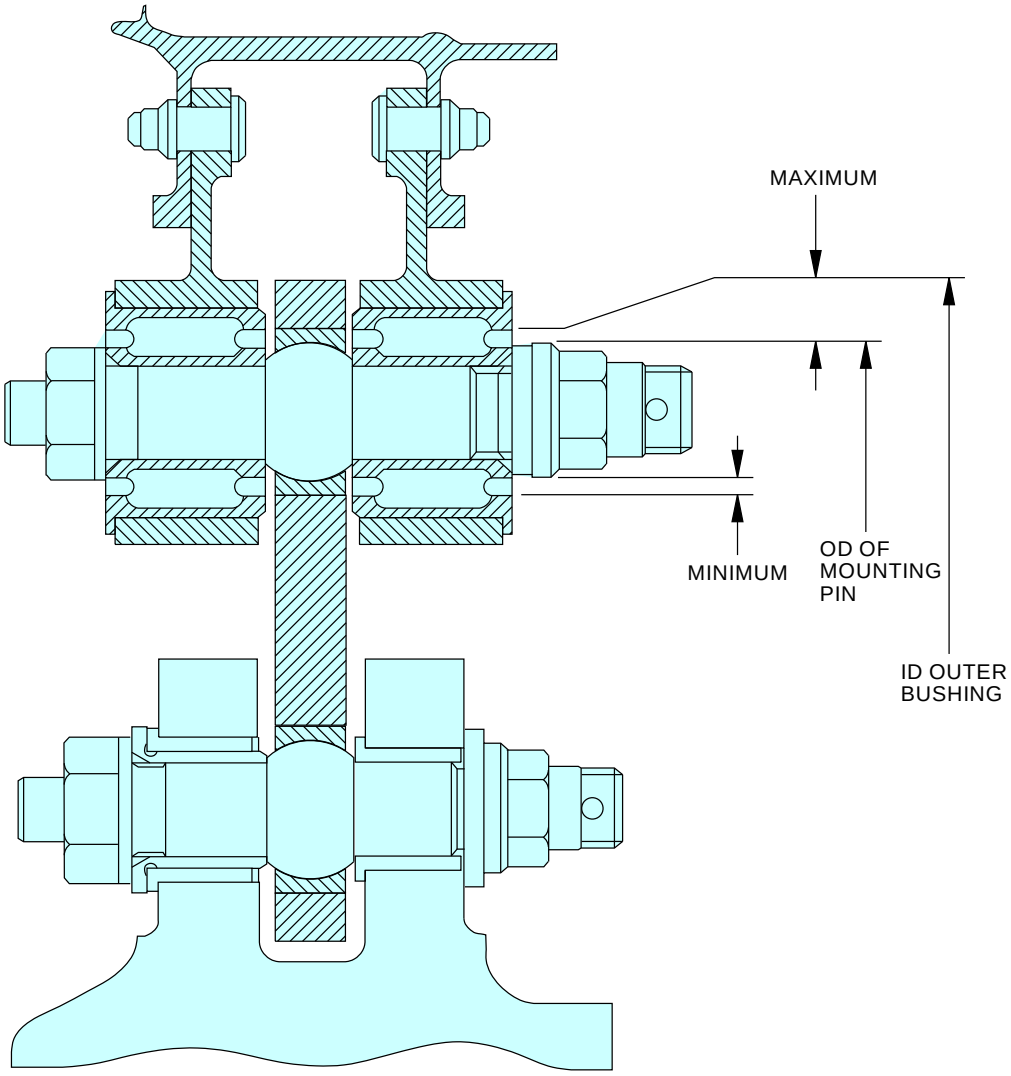

1507470 S0000275872_V2

Accessory Gearbox Inspection
Figure 3 (Sheet 4 of 4)

BOEING PROPRIETARY - Copyright © Unpublished Work - See title page for details

DATE	TAIL NUMBER	STATION	AIRLINE CARD NO.	BOEING CARD NO.
				72-070-02-01

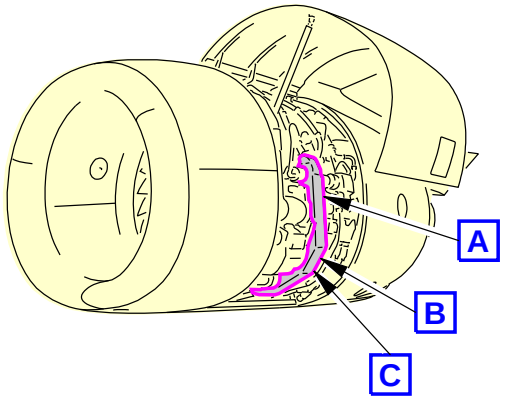

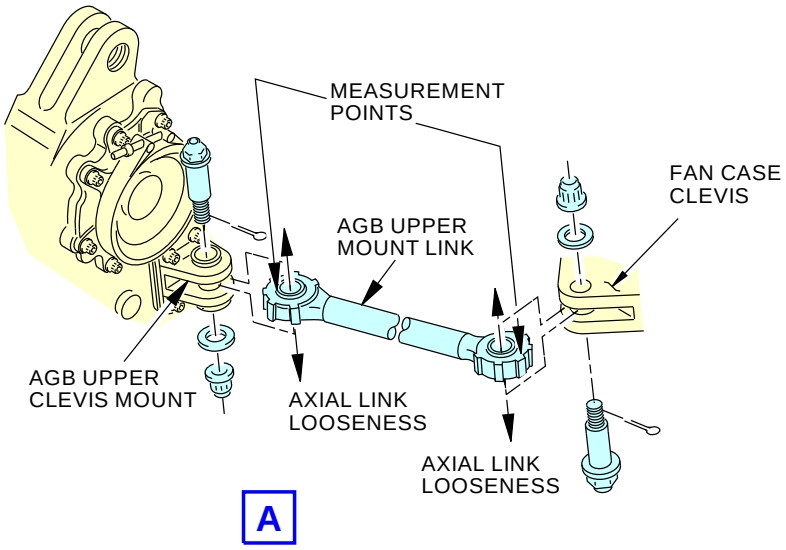

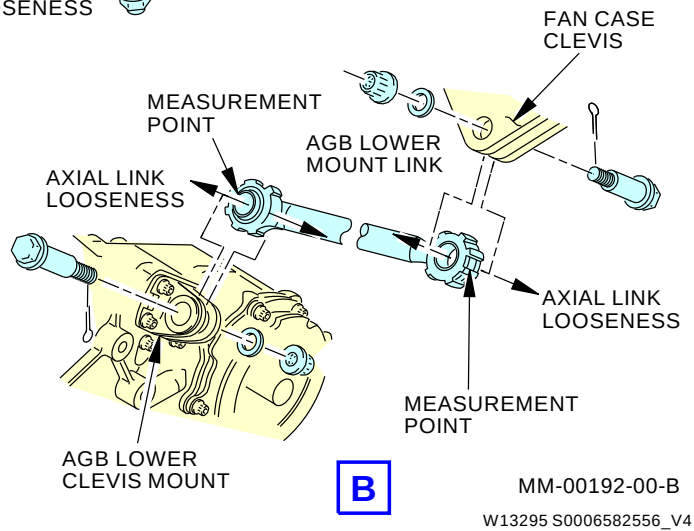

MM-00192-00-B

W13295 S0006582556_V4

Accessory Gearbox Mounts Inspection
Figure 4 (Sheet 1 of 2)

BOEING PROPRIETARY - Copyright © Unpublished Work - See title page for details

DATE	TAIL NUMBER	STATION	AIRLINE CARD NO.	BOEING CARD NO.
				72-070-02-01

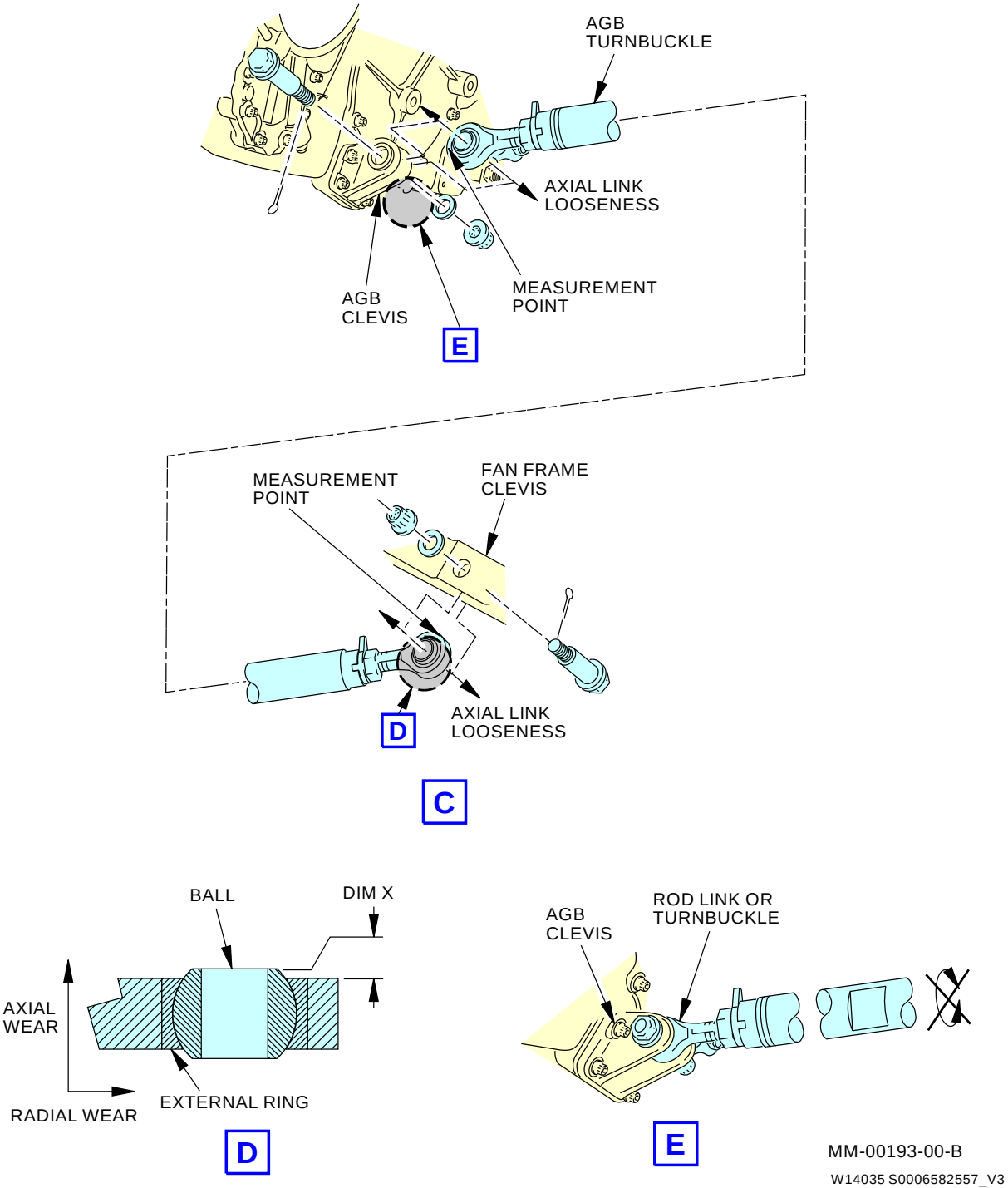

Accessory Gearbox Mounts Inspection
Figure 4 (Sheet 2 of 2)

BOEING PROPRIETARY - Copyright © Unpublished Work - See title page for details

AIRLINE CARD NO		TITLE			BOEING CARD NO.
		LEFT ENGINE ATTACHMENT BOLTS FOR THE THRUST MOUNT FITTINGS			72-100-01-01
DATE	TASK VISUAL CHECK				RELATED CARD
TAIL NUMBER	WORK AREA LEFT ENGINE	VERSION 1.1	THRESHOLD 10000 FC	REPEAT 10000 FC	APPLICABILITY AIRPLANE: ALL ENGINE: ALL
STATION	SKILL AIRPL				
		ACCESS 413 414 415 416			ZONE 411

Visual check of the left engine attachment bolts for the thrust mount fittings.

A. References

Reference	Title
AMM 71-00-00-800-811-F00	Power Plant Test Reference Table (P/B 501)
AMM 72-23-03-000-802-F00	Shroud Segments Removal (P/B 401)
AMM 72-23-03-400-802-F00	Shroud Segments Installation (P/B 401)
AMM 72-23-04-000-801-F00	Thrust Mount Removal (P/B 401)
AMM 72-23-04-400-801-F00	Thrust Mount Installation (P/B 401)
AMM 72-23-07-000-801-F00	Fan Duct Panel Removal (P/B 401)
AMM 72-23-07-400-801-F00	Fan Duct Panel Installation (P/B 401)
AMM 75-32-00-730-801-F00	VBV Actuation System - Manual Operation (P/B 201)
AMM 78-31-00-010-801-F00	Open the Thrust Reverser (Selection) (P/B 201)
AMM 78-31-00-010-804-F00	Close the Thrust Reverser (Selection) (P/B 201)

B. Consumable Materials

Reference	Description	Specification
D00601 [CP2101]	High-temperature graphite compound	SAE AMS 2518
D00641 [CP5062]	Lubricant - Corrosion Inhibiting, Dry Film - Molykote D 321 R or Dow Corning 321	
G02345 [CP8001]	Wire - Safety, 0.032 Inch (0.8 mm) Diameter	CFM CP8001, AMS 5687
G50065 [CP8006]	Cable, Safety, Stainless Steel, 0.032 inch (0.813 mm) Diameter	M50 TF 9 CL-A

BOEING PROPRIETARY - Copyright © Unpublished Work - See title page for details

DATE	TAIL NUMBER	STATION	AIRLINE CARD NO.	BOEING CARD NO.
				72-100-01-01

MECH	INSP

TASK 72-23-04-200-802-F00

1. **Thrust Mount Attach Bolts Inspection (Visual)**
(Figure 1)

A. General

(1) The forward thrust mounts can be found on the top right and left side of the fan frame.

B. Prepare for the Inspection

SUBTASK 72-23-04-040-005-F00

(1) Open these circuit breakers and install safety tags:

CAPT Electrical System Panel, P18-2

Row	Col	Number	Name
B	8	C01103	ENGINE 1 START VALVE

F/O Electrical System Panel, P6-2

Row	Col	Number	Name
C	4	C00154	ENGINE 2 START VALVE

SUBTASK 72-23-04-040-006-F00

(2) Install a DO-NOT-OPERATE tag on the applicable engine start switch.

SUBTASK 72-23-04-040-002-F00

WARNING: DO THESE SPECIFIED TASKS IN THE CORRECT SEQUENCE BEFORE YOU OPEN THE THRUST REVERSER: RETRACT THE LEADING EDGE, DO THE DEACTIVATION FOR THE LEADING EDGE AND THE THRUST REVERSERS (FOR GROUND MAINTENANCE), AND OPEN THE FAN COWL PANELS. IF YOU DO NOT OBEY THE ABOVE SEQUENCE, INJURIES TO PERSONS AND DAMAGE TO EQUIPMENT CAN OCCUR.

(3) Do this task: Open the Thrust Reverser (Selection), AMM TASK 78-31-00-010-801-F00.

SUBTASK 72-23-04-010-001-F00

(4) If it is necessary, remove the applicable shroud segment, do this task: Shroud Segments Removal, AMM TASK 72-23-03-000-802-F00.

SUBTASK 72-23-04-020-002-F00

(5) Clean all dirt and unwanted material from the thrust mounts and bolts.

C. Examine the Thrust Mount Bolts

SUBTASK 72-23-04-210-004-F00

(1) If you find damage that is not in the limits, replace the thrust mount bolts, unless you are given other instructions.

These are the tasks:

Thrust Mount Removal, AMM TASK 72-23-04-000-801-F00,

Thrust Mount Installation, AMM TASK 72-23-04-400-801-F00.

BOEING PROPRIETARY - Copyright © Unpublished Work - See title page for details

SUBTASK 72-23-04-210-005-F00

MECH | INSP

(2) Make sure the attach bolts and lockwire for each of the thrust mounts is not missing or loose:

NOTE: You should use a flashlight and an inspection mirror to examine the bolts that are not easy to see.

CAUTION: BE CAREFUL WHEN YOU INSTALL PARTS THAT ARE AROUND AN OPEN VBV DOOR. PARTS THAT FALL INTO AN OPEN VBV DOOR CAN FALL IN THE HIGH PRESSURE COMPRESSOR OF THE ENGINE. PARTS WHICH FALL INTO THE ENGINE CAN CAUSE ENGINE DAMAGE AT THE FIRST ENGINE RUN.

(a) Missing or broken bolt

1) Use a flashlight to shine thru the nut where the bolt is missing:

NOTE: The nuts are in the VBV cavity in the fan frame.

a) Make sure that a piece of broken bolt is not in the nut.

2) If no piece of bolt [3] stays in the nut [4], do these steps:

a) Lubricate the threads of a replacement bolt with graphite compound, D00601 [CP2101].

b) Install the bolt [3].

c) Tighten the bolt [3] to 547-603 pound-inches (62-68 Newton meters).

d) Examine the other bolts [3] for missing or damaged lockwire.

e) Install new safety wire, G02345 [CP8001] or cable, G50065 [CP8006] [2] to the bolts [3] in groups of two.

3) If a piece of bolt [3] stays in the nut, do these steps:

CAUTION: BE CAREFUL WHEN YOU INSTALL PARTS THAT ARE AROUND AN OPEN VBV DOOR. PARTS THAT FALL INTO AN OPEN VBV DOOR CAN FALL IN THE HIGH PRESSURE COMPRESSOR OF THE ENGINE. PARTS WHICH FALL INTO THE ENGINE CAN CAUSE ENGINE DAMAGE AT THE FIRST ENGINE RUN.

a) Make sure that the VBV doors are in the closed position.

b) If the VBV doors are not fully closed, do this task: VBV Actuation System - Manual Operation, AMM TASK 75-32-00-730-801-F00

c) Remove the applicable fan duct panel, do this task: Fan Duct Panel Removal, AMM TASK 72-23-07-000-801-F00.

d) Remove the two bolts [5].

CAUTION: MAKE SURE THE NUT DOES NOT FALL AND REMAIN IN THE VBV CAVITY. WHEN THE BRACKET IS REMOVED, THE NUT IS NOT HELD ON THE FAN FRAME AND COULD FALL INTO THE ENGINE.

e) Remove the bracket [6] and nut [4].

f) Install a new nut [4].

BOEING PROPRIETARY - Copyright © Unpublished Work - See title page for details

MECH	INSP

g) Install the bracket [6].

h) Lubricate the threads of the two bolts [5] with Dow Corning 321 lubricant, D00641 [CP5062].

i) Install and tighten the two bolts [5] with your hand.

NOTE: This is to hold the bracket [6].

j) Make sure that the nut [4] can move freely axially.

k) Tighten the two bolts [5] to 110-120 pound-inches (12.4-13.6 Newton meters).

l) Lubricate the threads of a new bolt [3] with graphite compound, D00601 [CP2101].

m) Install the bolt [3].

n) Tighten the bolt [3] to 547-603 pound-inches (62-68 Newton meters).

o) Install safety wire, G02345 [CP8001] or cable, G50065 [CP8006] [2] to the bolts [3] in groups of two.

(b) Missing or damaged lockwire

1) Remove all damaged pieces of lockwire.

2) Tighten the bolts [3] to 547-603 pound-inches (62-68 Newton meters).

3) Install new safety wire, G02345 [CP8001] or cable, G50065 [CP8006] to the bolts [3] in groups of two.

SUBTASK 72-23-04-410-001-F00

(3) To install the applicable fan duct panel, do this task: Fan Duct Panel Installation, AMM TASK 72-23-07-400-801-F00.

SUBTASK 72-23-04-010-009-F00

(4) Install the applicable shroud segment, do this task: Shroud Segments Installation, AMM TASK 72-23-03-400-802-F00.

D. Put the Airplane Back to Its Usual Condition

SUBTASK 72-23-04-440-002-F00

WARNING: OBEY THE INSTRUCTIONS IN THE PROCEDURE TO CLOSE THE THRUST REVERSERS. IF YOU DO NOT OBEY THE INSTRUCTIONS, INJURIES TO PERSONS AND DAMAGE TO EQUIPMENT CAN OCCUR.

(1) Do this task: Close the Thrust Reverser (Selection), AMM TASK 78-31-00-010-804-F00.

SUBTASK 72-23-04-440-004-F00

(2) Remove the DO-NOT-OPERATE tag from the applicable engine start switch.

SUBTASK 72-23-04-710-002-F00

(3) Close these circuit breakers:

CAPT Electrical System Panel, P18-2

Row	Col	Number	Name
B	8	C01103	ENGINE 1 START VALVE

BOEING PROPRIETARY - Copyright © Unpublished Work - See title page for details

DATE	TAIL NUMBER	STATION	AIRLINE CARD NO.	BOEING CARD NO.
				72-100-01-01

MECH	INSP

F/O Electrical System Panel, P6-2

Row	Col	Number	Name
C	4	C00154	ENGINE 2 START VALVE

SUBTASK 72-23-04-700-001-F00

(4) If you did the task to manually close the VBV doors, make sure that you do the tests related to the VBV actuation that are listed in the Power Plant Test Reference Table (AMM TASK 71-00-00-800-811-F00).

——— END OF TASK ———

BOEING PROPRIETARY - Copyright © Unpublished Work - See title page for details

DATE	TAIL NUMBER	STATION	AIRLINE CARD NO.	BOEING CARD NO.
				72-100-01-01

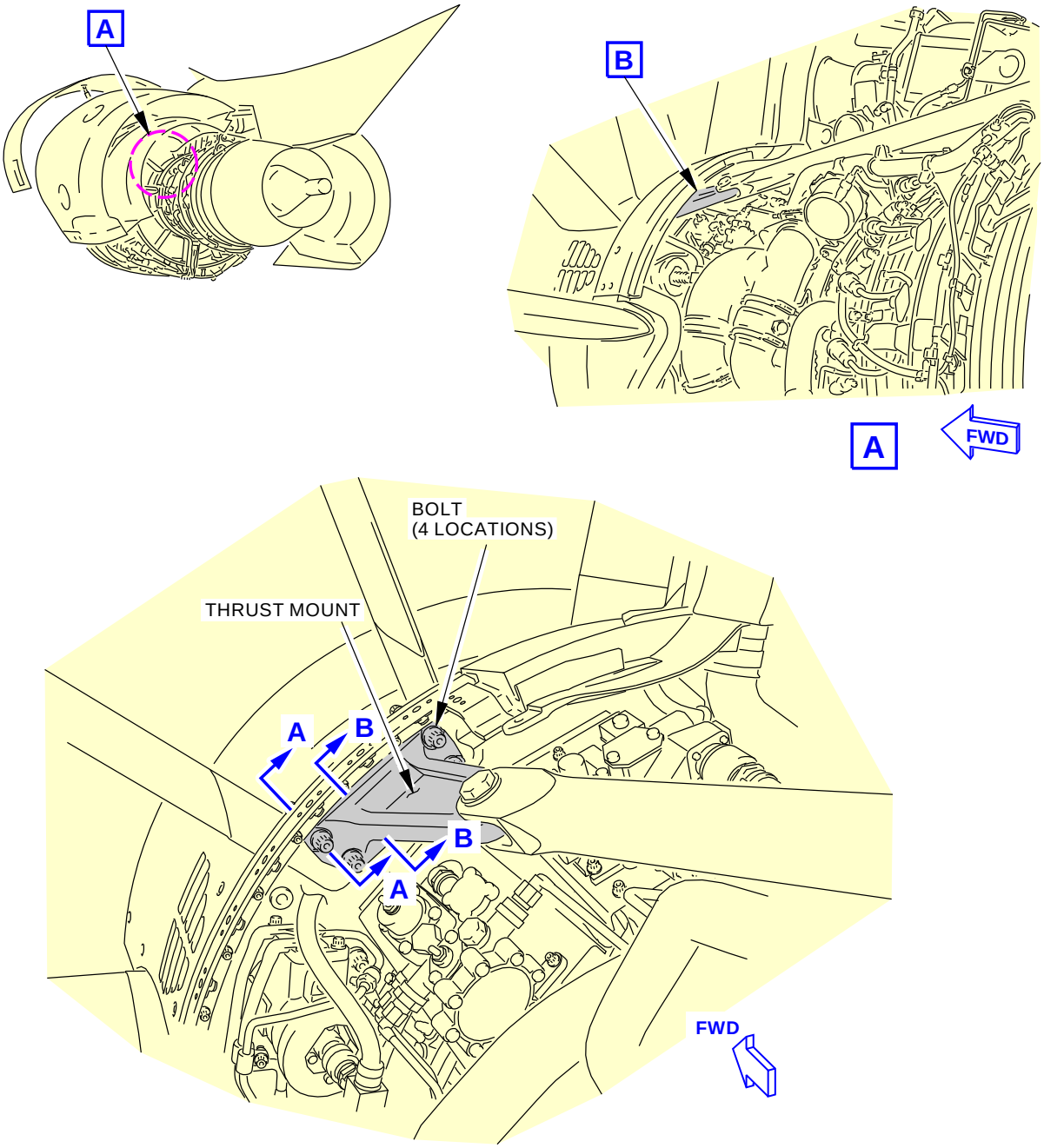

LEFT THRUST MOUNT IS SHOWN WITH THE FAN DUCT PANEL REMOVED
(EXAMPLE)

B

G29745 S0006582447_V2

Thrust Mount Attach Bolt Inspection
Figure 1 (Sheet 1 of 2)

BOEING PROPRIETARY - Copyright © Unpublished Work - See title page for details

DATE	TAIL NUMBER	STATION	AIRLINE CARD NO.	BOEING CARD NO.
				72-100-01-01

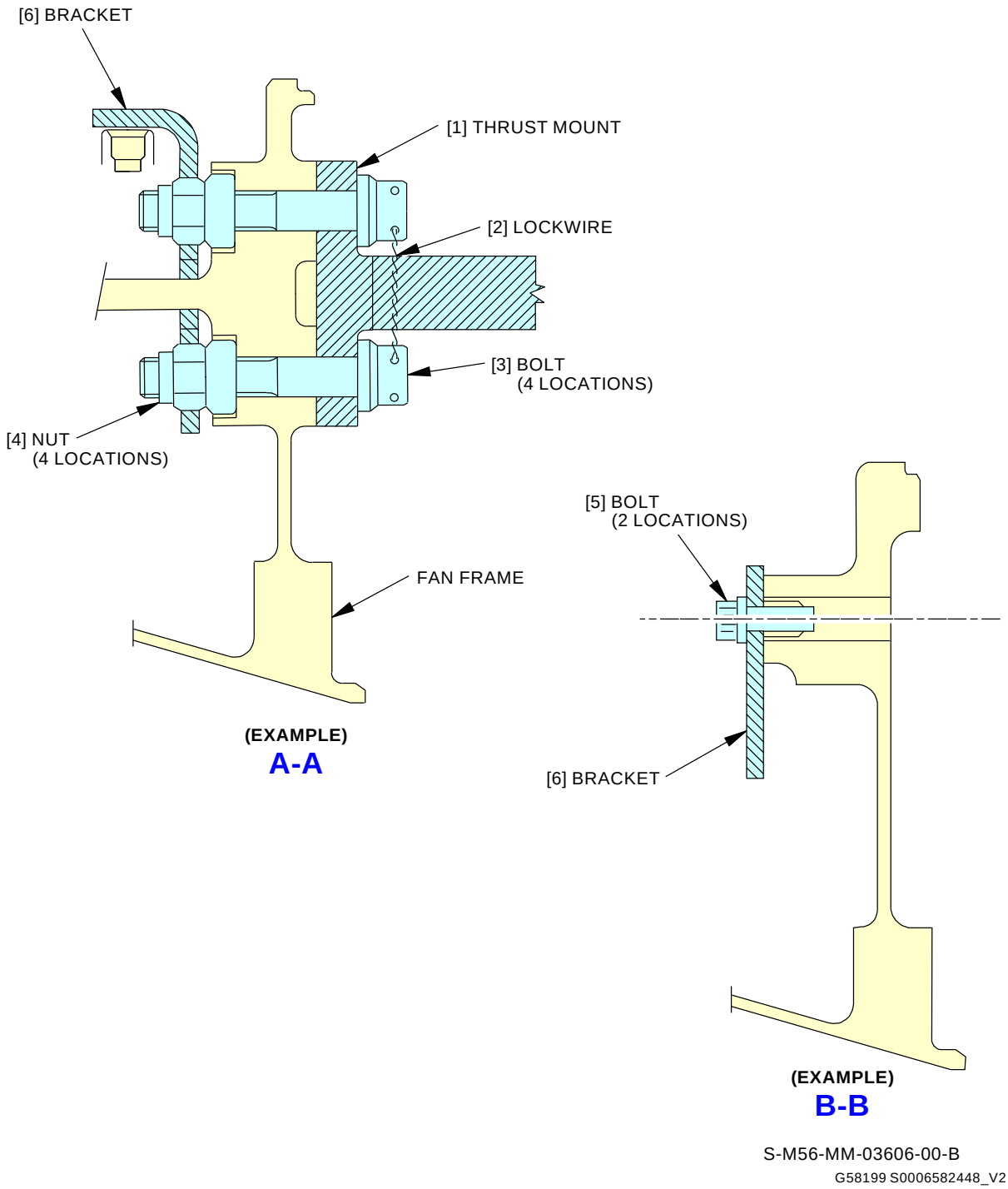

Thrust Mount Attach Bolt Inspection
Figure 1 (Sheet 2 of 2)

BOEING PROPRIETARY - Copyright © Unpublished Work - See title page for details

AIRLINE CARD NO		TITLE			BOEING CARD NO.
		RIGHT ENGINE ATTACHMENT BOLTS FOR THE THRUST MOUNT FITTINGS			72-100-02-01
DATE	TASK VISUAL CHECK				RELATED CARD
TAIL NUMBER	WORK AREA RIGHT ENGINE	VERSION 1.1	THRESHOLD 10000 FC	REPEAT 10000 FC	APPLICABILITY AIRPLANE: ALL ENGINE: ALL
STATION	SKILL AIRPL				
		ACCESS 423 424 425 426			ZONE 421

Visual check of the right engine attachment bolts for the thrust mount fittings.

A. References

Reference	Title
AMM 71-00-00-800-811-F00	Power Plant Test Reference Table (P/B 501)
AMM 72-23-03-000-802-F00	Shroud Segments Removal (P/B 401)
AMM 72-23-03-400-802-F00	Shroud Segments Installation (P/B 401)
AMM 72-23-04-000-801-F00	Thrust Mount Removal (P/B 401)
AMM 72-23-04-400-801-F00	Thrust Mount Installation (P/B 401)
AMM 72-23-07-000-801-F00	Fan Duct Panel Removal (P/B 401)
AMM 72-23-07-400-801-F00	Fan Duct Panel Installation (P/B 401)
AMM 75-32-00-730-801-F00	VBV Actuation System - Manual Operation (P/B 201)
AMM 78-31-00-010-801-F00	Open the Thrust Reverser (Selection) (P/B 201)
AMM 78-31-00-010-804-F00	Close the Thrust Reverser (Selection) (P/B 201)

B. Consumable Materials

Reference	Description	Specification
D00601 [CP2101]	High-temperature graphite compound	SAE AMS 2518
D00641 [CP5062]	Lubricant - Corrosion Inhibiting, Dry Film - Molykote D 321 R or Dow Corning 321	
G02345 [CP8001]	Wire - Safety, 0.032 Inch (0.8 mm) Diameter	CFM CP8001, AMS 5687
G50065 [CP8006]	Cable, Safety, Stainless Steel, 0.032 inch (0.813 mm) Diameter	M50 TF 9 CL-A

BOEING PROPRIETARY - Copyright © Unpublished Work - See title page for details

MECH	INSP

TASK 72-23-04-200-802-F00

1. Thrust Mount Attach Bolts Inspection (Visual)

(Figure 1)

A. General

(1) The forward thrust mounts can be found on the top right and left side of the fan frame.

B. Prepare for the Inspection

SUBTASK 72-23-04-040-005-F00

(1) Open these circuit breakers and install safety tags:

CAPT Electrical System Panel, P18-2

Row	Col	Number	Name
B	8	C01103	ENGINE 1 START VALVE

F/O Electrical System Panel, P6-2

Row	Col	Number	Name
C	4	C00154	ENGINE 2 START VALVE

SUBTASK 72-23-04-040-006-F00

(2) Install a DO-NOT-OPERATE tag on the applicable engine start switch.

SUBTASK 72-23-04-040-002-F00

WARNING: DO THESE SPECIFIED TASKS IN THE CORRECT SEQUENCE BEFORE YOU OPEN THE THRUST REVERSER: RETRACT THE LEADING EDGE, DO THE DEACTIVATION FOR THE LEADING EDGE AND THE THRUST REVERSERS (FOR GROUND MAINTENANCE), AND OPEN THE FAN COWL PANELS. IF YOU DO NOT OBEY THE ABOVE SEQUENCE, INJURIES TO PERSONS AND DAMAGE TO EQUIPMENT CAN OCCUR.

(3) Do this task: Open the Thrust Reverser (Selection), AMM TASK 78-31-00-010-801-F00.

SUBTASK 72-23-04-010-001-F00

(4) If it is necessary, remove the applicable shroud segment, do this task: Shroud Segments Removal, AMM TASK 72-23-03-000-802-F00.

SUBTASK 72-23-04-020-002-F00

(5) Clean all dirt and unwanted material from the thrust mounts and bolts.

C. Examine the Thrust Mount Bolts

SUBTASK 72-23-04-210-004-F00

(1) If you find damage that is not in the limits, replace the thrust mount bolts, unless you are given other instructions.

These are the tasks:

Thrust Mount Removal, AMM TASK 72-23-04-000-801-F00,

Thrust Mount Installation, AMM TASK 72-23-04-400-801-F00.

BOEING PROPRIETARY - Copyright © Unpublished Work - See title page for details

SUBTASK 72-23-04-210-005-F00

MECH | INSP

(2) Make sure the attach bolts and lockwire for each of the thrust mounts is not missing or loose:

NOTE: You should use a flashlight and an inspection mirror to examine the bolts that are not easy to see.

CAUTION: BE CAREFUL WHEN YOU INSTALL PARTS THAT ARE AROUND AN OPEN VBV DOOR. PARTS THAT FALL INTO AN OPEN VBV DOOR CAN FALL IN THE HIGH PRESSURE COMPRESSOR OF THE ENGINE. PARTS WHICH FALL INTO THE ENGINE CAN CAUSE ENGINE DAMAGE AT THE FIRST ENGINE RUN.

(a) Missing or broken bolt

1) Use a flashlight to shine thru the nut where the bolt is missing:

NOTE: The nuts are in the VBV cavity in the fan frame.

a) Make sure that a piece of broken bolt is not in the nut.

2) If no piece of bolt [3] stays in the nut [4], do these steps:

a) Lubricate the threads of a replacement bolt with graphite compound, D00601 [CP2101].

b) Install the bolt [3].

c) Tighten the bolt [3] to 547-603 pound-inches (62-68 Newton meters).

d) Examine the other bolts [3] for missing or damaged lockwire.

e) Install new safety wire, G02345 [CP8001] or cable, G50065 [CP8006] [2] to the bolts [3] in groups of two.

3) If a piece of bolt [3] stays in the nut, do these steps:

CAUTION: BE CAREFUL WHEN YOU INSTALL PARTS THAT ARE AROUND AN OPEN VBV DOOR. PARTS THAT FALL INTO AN OPEN VBV DOOR CAN FALL IN THE HIGH PRESSURE COMPRESSOR OF THE ENGINE. PARTS WHICH FALL INTO THE ENGINE CAN CAUSE ENGINE DAMAGE AT THE FIRST ENGINE RUN.

a) Make sure that the VBV doors are in the closed position.

b) If the VBV doors are not fully closed, do this task: VBV Actuation System - Manual Operation, AMM TASK 75-32-00-730-801-F00

c) Remove the applicable fan duct panel, do this task: Fan Duct Panel Removal, AMM TASK 72-23-07-000-801-F00.

d) Remove the two bolts [5].

CAUTION: MAKE SURE THE NUT DOES NOT FALL AND REMAIN IN THE VBV CAVITY. WHEN THE BRACKET IS REMOVED, THE NUT IS NOT HELD ON THE FAN FRAME AND COULD FALL INTO THE ENGINE.

e) Remove the bracket [6] and nut [4].

f) Install a new nut [4].

BOEING PROPRIETARY - Copyright © Unpublished Work - See title page for details

g) Install the bracket [6].

h) Lubricate the threads of the two bolts [5] with Dow Corning 321 lubricant, D00641 [CP5062].

i) Install and tighten the two bolts [5] with your hand.

NOTE: This is to hold the bracket [6].

j) Make sure that the nut [4] can move freely axially.

k) Tighten the two bolts [5] to 110-120 pound-inches (12.4-13.6 Newton meters).

l) Lubricate the threads of a new bolt [3] with graphite compound, D00601 [CP2101].

m) Install the bolt [3].

n) Tighten the bolt [3] to 547-603 pound-inches (62-68 Newton meters).

o) Install safety wire, G02345 [CP8001] or cable, G50065 [CP8006] [2] to the bolts [3] in groups of two.

(b) Missing or damaged lockwire

1) Remove all damaged pieces of lockwire.

2) Tighten the bolts [3] to 547-603 pound-inches (62-68 Newton meters).

3) Install new safety wire, G02345 [CP8001] or cable, G50065 [CP8006] to the bolts [3] in groups of two.

SUBTASK 72-23-04-410-001-F00

(3) To install the applicable fan duct panel, do this task: Fan Duct Panel Installation, AMM TASK 72-23-07-400-801-F00.

SUBTASK 72-23-04-010-009-F00

(4) Install the applicable shroud segment, do this task: Shroud Segments Installation, AMM TASK 72-23-03-400-802-F00.

D. Put the Airplane Back to Its Usual Condition

SUBTASK 72-23-04-440-002-F00

WARNING: OBEY THE INSTRUCTIONS IN THE PROCEDURE TO CLOSE THE THRUST REVERSERS. IF YOU DO NOT OBEY THE INSTRUCTIONS, INJURIES TO PERSONS AND DAMAGE TO EQUIPMENT CAN OCCUR.

(1) Do this task: Close the Thrust Reverser (Selection), AMM TASK 78-31-00-010-804-F00.

SUBTASK 72-23-04-440-004-F00

(2) Remove the DO-NOT-OPERATE tag from the applicable engine start switch.

SUBTASK 72-23-04-710-002-F00

(3) Close these circuit breakers:

CAPT Electrical System Panel, P18-2

Row	Col	Number	Name
B	8	C01103	ENGINE 1 START VALVE

BOEING PROPRIETARY - Copyright © Unpublished Work - See title page for details

DATE	TAIL NUMBER	STATION	AIRLINE CARD NO.	BOEING CARD NO.
				72-100-02-01

MECH	INSP

F/O Electrical System Panel, P6-2

Row	Col	Number	Name
C	4	C00154	ENGINE 2 START VALVE

SUBTASK 72-23-04-700-001-F00

(4) If you did the task to manually close the VBV doors, make sure that you do the tests related to the VBV actuation that are listed in the Power Plant Test Reference Table (AMM TASK 71-00-00-800-811-F00).

——— END OF TASK ———

BOEING PROPRIETARY - Copyright © Unpublished Work - See title page for details

DATE	TAIL NUMBER	STATION	AIRLINE CARD NO.	BOEING CARD NO.
				72-100-02-01

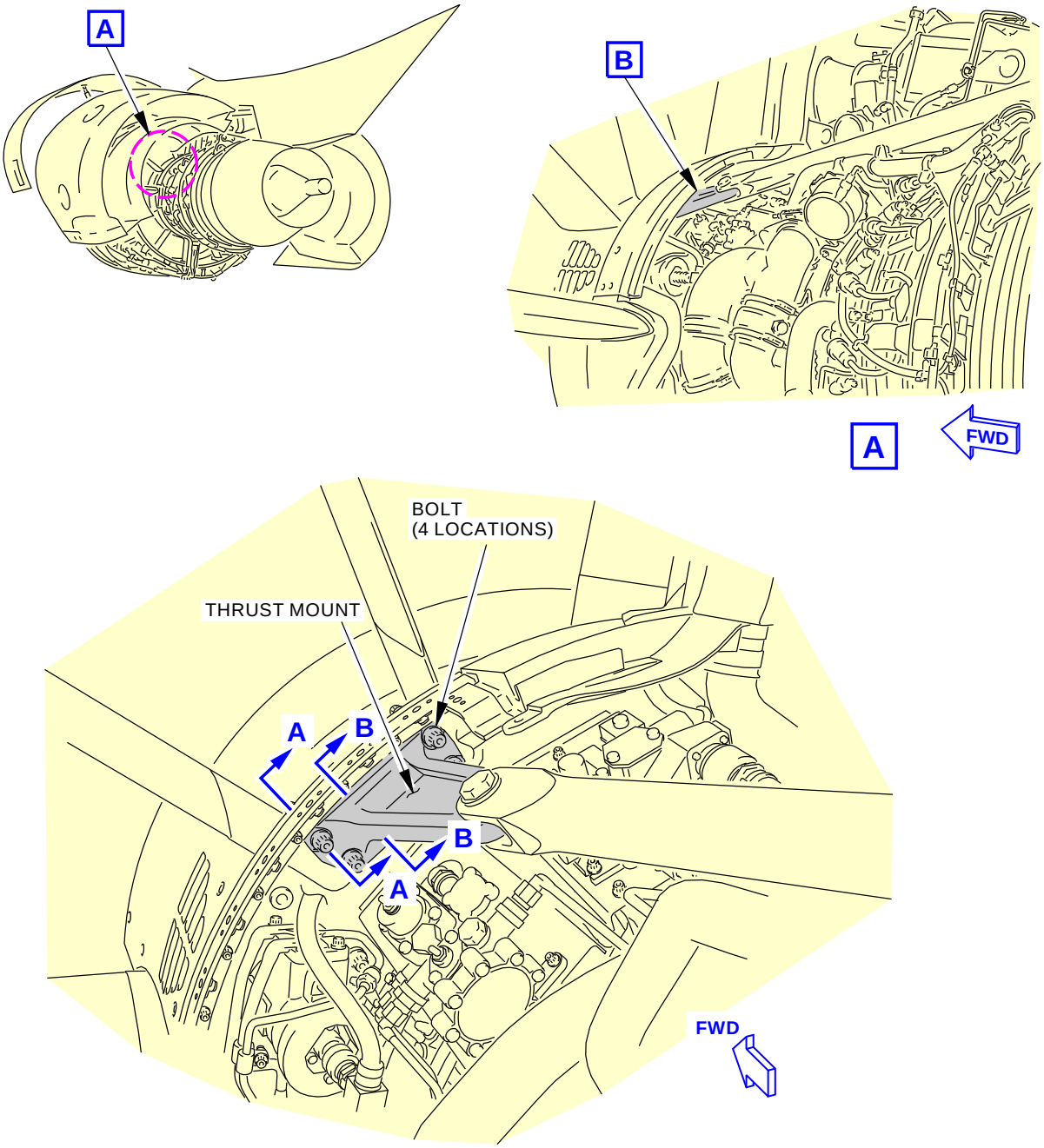

LEFT THRUST MOUNT IS SHOWN WITH THE FAN DUCT PANEL REMOVED
(EXAMPLE)

B

G29745 S0006582447_V2

Thrust Mount Attach Bolt Inspection
Figure 1 (Sheet 1 of 2)

BOEING PROPRIETARY - Copyright © Unpublished Work - See title page for details

DATE	TAIL NUMBER	STATION	AIRLINE CARD NO.	BOEING CARD NO.
				72-100-02-01

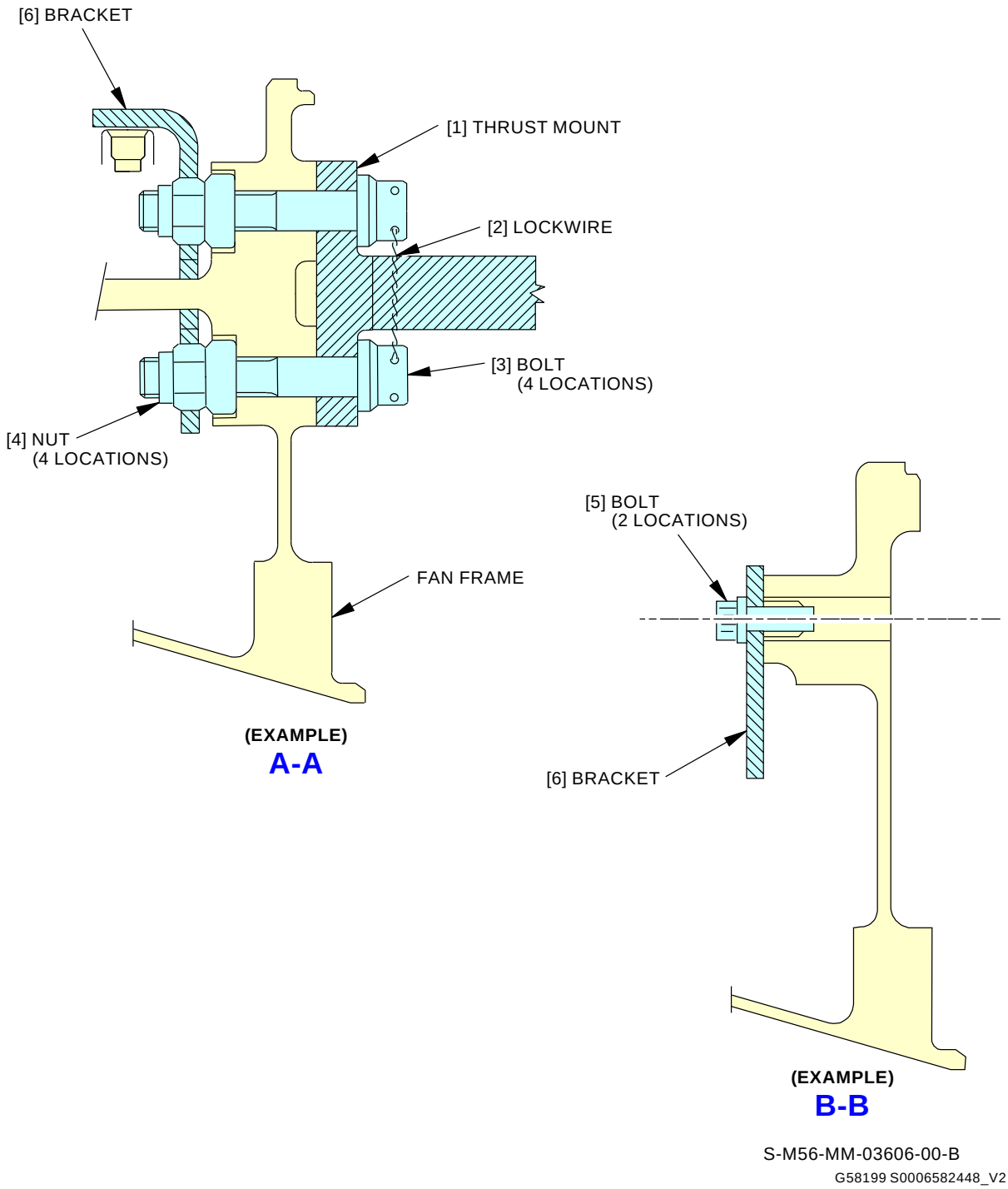

Thrust Mount Attach Bolt Inspection
Figure 1 (Sheet 2 of 2)

BOEING PROPRIETARY - Copyright © Unpublished Work - See title page for details

AIRLINE CARD NO		TITLE			BOEING CARD NO.
		LEFT ENGINE THRUST MOUNT FITTINGS			72-110-01-01
DATE	TASK VISUAL CHECK				RELATED CARD
TAIL NUMBER	WORK AREA LEFT ENGINE	VERSION 1.1	THRESHOLD 15000 FH	REPEAT 15000 FH	APPLICABILITY AIRPLANE: ALL ENGINE: ALL
STATION	SKILL AIRPL				
		ACCESS 413 414 415 416			ZONE 411

Visual check of the left engine thrust mount fittings.

A. References

Reference	Title
AMM 72-23-03-000-802-F00	Shroud Segments Removal (P/B 401)
AMM 72-23-03-400-802-F00	Shroud Segments Installation (P/B 401)
AMM 72-23-04-000-801-F00	Thrust Mount Removal (P/B 401)
AMM 72-23-04-400-801-F00	Thrust Mount Installation (P/B 401)
AMM 78-31-00-010-801-F00	Open the Thrust Reverser (Selection) (P/B 201)
AMM 78-31-00-010-804-F00	Close the Thrust Reverser (Selection) (P/B 201)

BOEING PROPRIETARY - Copyright © Unpublished Work - See title page for details

DATE	TAIL NUMBER	STATION	AIRLINE CARD NO.	BOEING CARD NO.
				72-110-01-01

MECH	INSP

TASK 72-23-04-200-801-F00

1. Thrust Mounts Inspection

(Figure 1)

A. General

(1) The forward thrust mounts can be found on the upper right and left side of the fan frame.

B. Prepare for the Inspection

SUBTASK 72-23-04-040-003-F00

(1) Open these circuit breakers and install safety tags:

CAPT Electrical System Panel, P18-2

Row	Col	Number	Name
B	8	C01103	ENGINE 1 START VALVE

F/O Electrical System Panel, P6-2

Row	Col	Number	Name
C	4	C00154	ENGINE 2 START VALVE

SUBTASK 72-23-04-040-004-F00

(2) Install a DO-NOT-OPERATE tag on the applicable engine start switch.

SUBTASK 72-23-04-040-001-F00

WARNING: DO THESE SPECIFIED TASKS IN THE CORRECT SEQUENCE BEFORE YOU OPEN THE THRUST REVERSER: RETRACT THE LEADING EDGE, DO THE DEACTIVATION FOR THE LEADING EDGE AND THE THRUST REVERSERS (FOR GROUND MAINTENANCE), AND OPEN THE FAN COWL PANELS. IF YOU DO NOT OBEY THE ABOVE SEQUENCE, INJURIES TO PERSONS AND DAMAGE TO EQUIPMENT CAN OCCUR.

(3) Do this task: Open the Thrust Reverser (Selection), AMM TASK 78-31-00-010-801-F00.

SUBTASK 72-23-04-020-001-F00

(4) Clean all dirt and unwanted material from the thrust mounts.

NOTE: You should use a flashlight and an inspection mirror to examine the areas of the mounts that are not easy to see.

SUBTASK 72-23-04-010-007-F00

(5) Remove the applicable shroud segment, do this task: Shroud Segments Removal, AMM TASK 72-23-03-000-802-F00.

C. Examine the Thrust Mount

SUBTASK 72-23-04-900-001-F00

(1) If you find damage that is not in the limits, replace the thrust mount, unless you are given other instructions.

These are the tasks:

Thrust Mount Removal, AMM TASK 72-23-04-000-801-F00,

Thrust Mount Installation, AMM TASK 72-23-04-400-801-F00.

BOEING PROPRIETARY - Copyright © Unpublished Work - See title page for details

DATE	TAIL NUMBER	STATION	AIRLINE CARD NO.	BOEING CARD NO.
				72-110-01-01

MECH	INSP

SUBTASK 72-23-04-210-001-F00

(2) Examine the thrust mount for cracks:

(a) Cracks are not permitted.

D. Put the Airplane Back to Its Usual Condition

SUBTASK 72-23-04-010-008-F00

(1) Install the applicable shroud segment, do this task: Shroud Segments Installation, AMM TASK 72-23-03-400-802-F00.

SUBTASK 72-23-04-440-001-F00

WARNING: OBEY THE INSTRUCTIONS IN THE PROCEDURE TO CLOSE THE THRUST REVERSERS. IF YOU DO NOT OBEY THE INSTRUCTIONS, INJURIES TO PERSONS AND DAMAGE TO EQUIPMENT CAN OCCUR.

(2) Do this task: Close the Thrust Reverser (Selection), AMM TASK 78-31-00-010-804-F00.

SUBTASK 72-23-04-440-003-F00

(3) Remove the DO-NOT-OPERATE tag from the applicable engine start switch.

SUBTASK 72-23-04-710-001-F00

(4) Remove the safety tags and close these circuit breakers:

CAPT Electrical System Panel, P18-2

Row	Col	Number	Name
B	8	C01103	ENGINE 1 START VALVE

F/O Electrical System Panel, P6-2

Row	Col	Number	Name
C	4	C00154	ENGINE 2 START VALVE

——— END OF TASK ———

BOEING PROPRIETARY - Copyright © Unpublished Work - See title page for details

DATE	TAIL NUMBER	STATION	AIRLINE CARD NO.	BOEING CARD NO.
				72-110-01-01

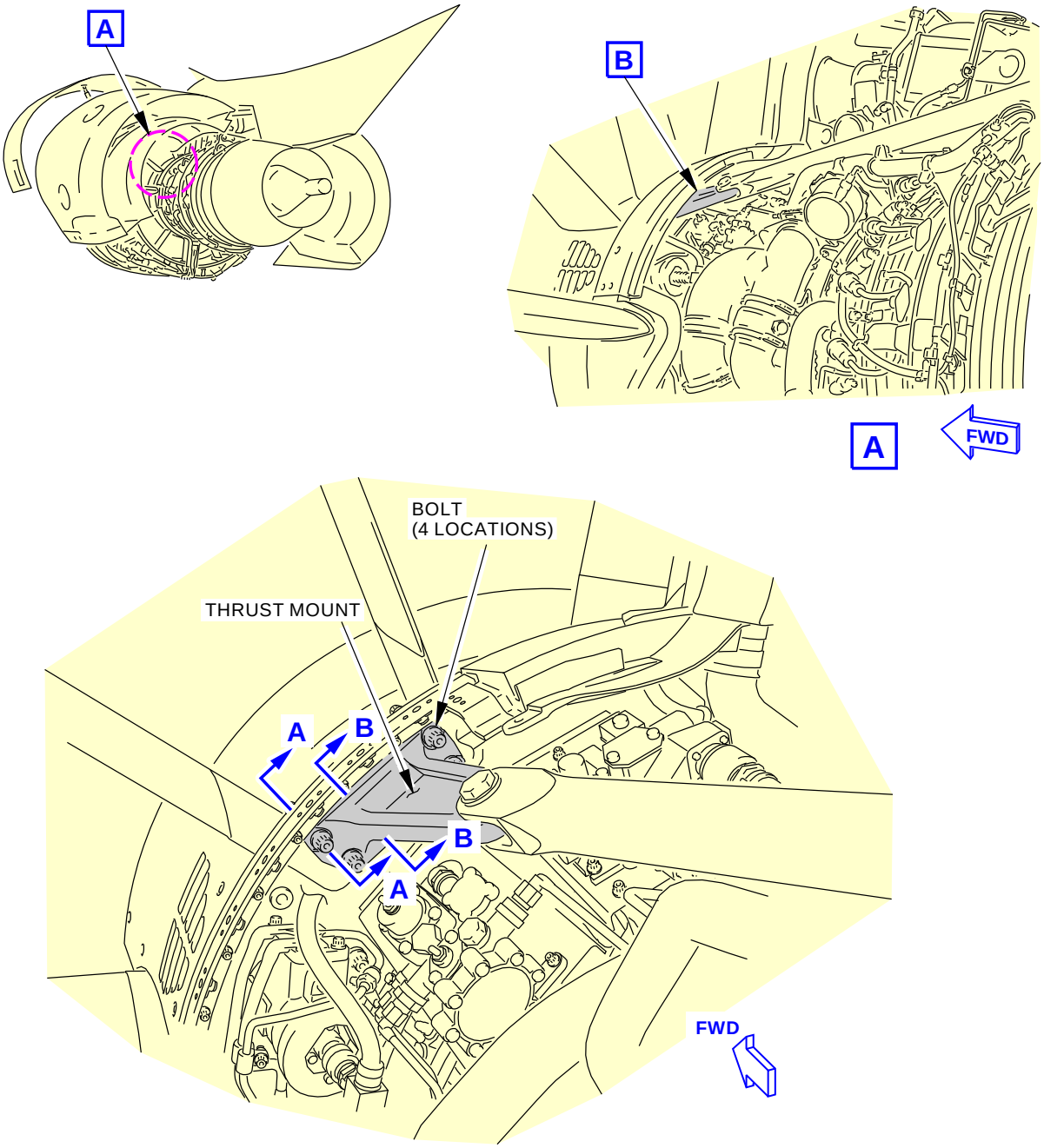

LEFT THRUST MOUNT IS SHOWN WITH THE FAN DUCT PANEL REMOVED
(EXAMPLE)

B

G29745 S0006582447_V2

Thrust Mount Attach Bolt Inspection
Figure 1 (Sheet 1 of 2)

BOEING PROPRIETARY - Copyright © Unpublished Work - See title page for details

DATE	TAIL NUMBER	STATION	AIRLINE CARD NO.	BOEING CARD NO.
				72-110-01-01

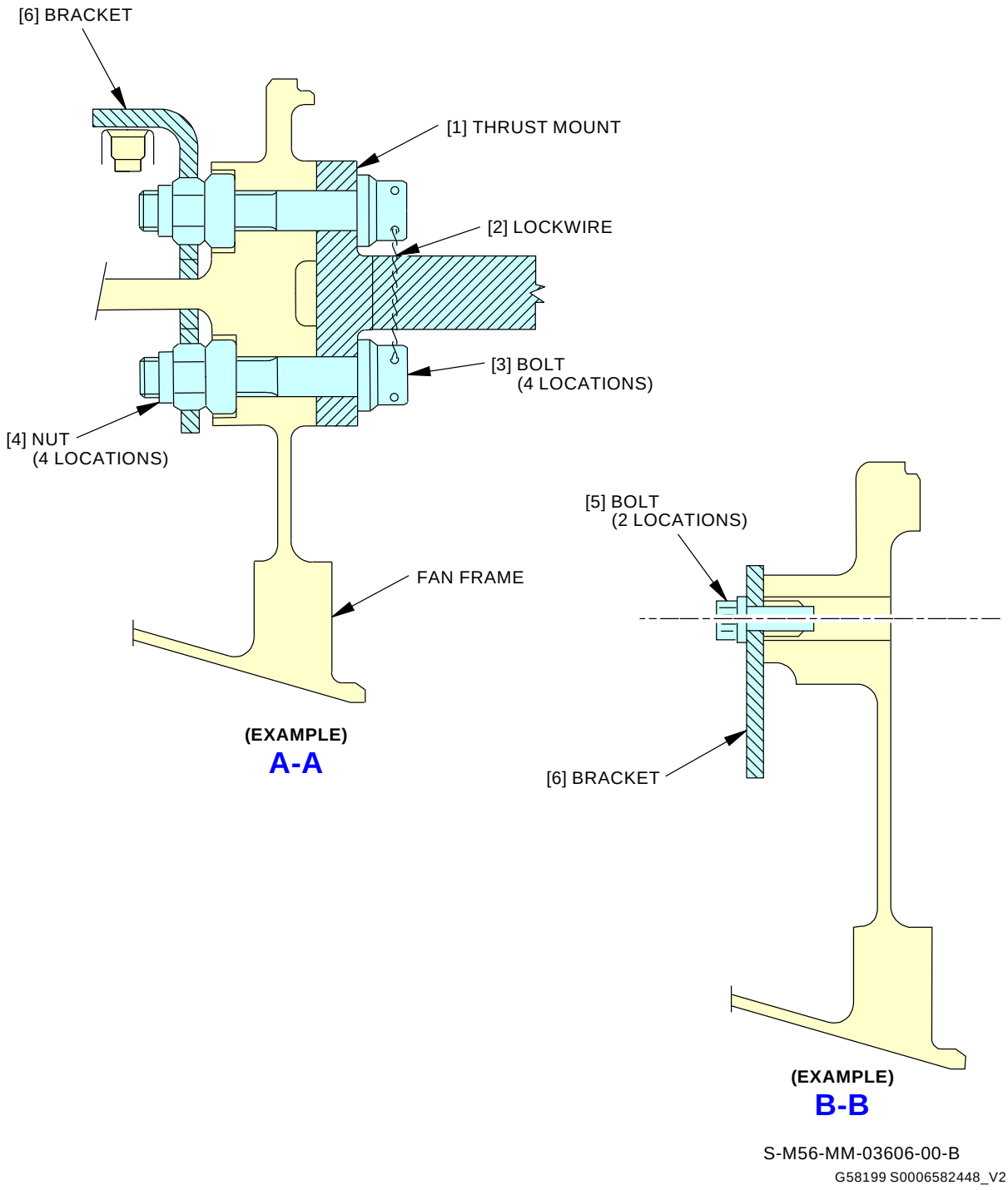

Thrust Mount Attach Bolt Inspection
Figure 1 (Sheet 2 of 2)

BOEING PROPRIETARY - Copyright © Unpublished Work - See title page for details

AIRLINE CARD NO		TITLE			BOEING CARD NO.
		RIGHT ENGINE THRUST MOUNT FITTINGS			72-110-02-01
DATE	TASK VISUAL CHECK				RELATED CARD
TAIL NUMBER	WORK AREA RIGHT ENGINE	VERSION 1.1	THRESHOLD 15000 FH	REPEAT 15000 FH	APPLICABILITY AIRPLANE: ALL ENGINE: ALL
STATION	SKILL AIRPL				
		ACCESS 423 424 425 426			ZONE 421

Visual check of the right engine thrust mount fittings.

A. References

Reference	Title
AMM 72-23-03-000-802-F00	Shroud Segments Removal (P/B 401)
AMM 72-23-03-400-802-F00	Shroud Segments Installation (P/B 401)
AMM 72-23-04-000-801-F00	Thrust Mount Removal (P/B 401)
AMM 72-23-04-400-801-F00	Thrust Mount Installation (P/B 401)
AMM 78-31-00-010-801-F00	Open the Thrust Reverser (Selection) (P/B 201)
AMM 78-31-00-010-804-F00	Close the Thrust Reverser (Selection) (P/B 201)

BOEING PROPRIETARY - Copyright © Unpublished Work - See title page for details

DATE	TAIL NUMBER	STATION	AIRLINE CARD NO.	BOEING CARD NO.
				72-110-02-01

MECH	INSP

TASK 72-23-04-200-801-F00

1. Thrust Mounts Inspection

(Figure 1)

A. General

(1) The forward thrust mounts can be found on the upper right and left side of the fan frame.

B. Prepare for the Inspection

SUBTASK 72-23-04-040-003-F00

(1) Open these circuit breakers and install safety tags:

CAPT Electrical System Panel, P18-2

Row	Col	Number	Name
B	8	C01103	ENGINE 1 START VALVE

F/O Electrical System Panel, P6-2

Row	Col	Number	Name
C	4	C00154	ENGINE 2 START VALVE

SUBTASK 72-23-04-040-004-F00

(2) Install a DO-NOT-OPERATE tag on the applicable engine start switch.

SUBTASK 72-23-04-040-001-F00

WARNING: DO THESE SPECIFIED TASKS IN THE CORRECT SEQUENCE BEFORE YOU OPEN THE THRUST REVERSER: RETRACT THE LEADING EDGE, DO THE DEACTIVATION FOR THE LEADING EDGE AND THE THRUST REVERSERS (FOR GROUND MAINTENANCE), AND OPEN THE FAN COWL PANELS. IF YOU DO NOT OBEY THE ABOVE SEQUENCE, INJURIES TO PERSONS AND DAMAGE TO EQUIPMENT CAN OCCUR.

(3) Do this task: Open the Thrust Reverser (Selection), AMM TASK 78-31-00-010-801-F00.

SUBTASK 72-23-04-020-001-F00

(4) Clean all dirt and unwanted material from the thrust mounts.

NOTE: You should use a flashlight and an inspection mirror to examine the areas of the mounts that are not easy to see.

SUBTASK 72-23-04-010-007-F00

(5) Remove the applicable shroud segment, do this task: Shroud Segments Removal, AMM TASK 72-23-03-000-802-F00.

C. Examine the Thrust Mount

SUBTASK 72-23-04-900-001-F00

(1) If you find damage that is not in the limits, replace the thrust mount, unless you are given other instructions.

These are the tasks:

Thrust Mount Removal, AMM TASK 72-23-04-000-801-F00,

Thrust Mount Installation, AMM TASK 72-23-04-400-801-F00.

BOEING PROPRIETARY - Copyright © Unpublished Work - See title page for details

DATE	TAIL NUMBER	STATION	AIRLINE CARD NO.	BOEING CARD NO.
				72-110-02-01

MECH	INSP

SUBTASK 72-23-04-210-001-F00

(2) Examine the thrust mount for cracks:

(a) Cracks are not permitted.

D. Put the Airplane Back to Its Usual Condition

SUBTASK 72-23-04-010-008-F00

(1) Install the applicable shroud segment, do this task: Shroud Segments Installation, AMM TASK 72-23-03-400-802-F00.

SUBTASK 72-23-04-440-001-F00

WARNING: OBEY THE INSTRUCTIONS IN THE PROCEDURE TO CLOSE THE THRUST REVERSERS. IF YOU DO NOT OBEY THE INSTRUCTIONS, INJURIES TO PERSONS AND DAMAGE TO EQUIPMENT CAN OCCUR.

(2) Do this task: Close the Thrust Reverser (Selection), AMM TASK 78-31-00-010-804-F00.

SUBTASK 72-23-04-440-003-F00

(3) Remove the DO-NOT-OPERATE tag from the applicable engine start switch.

SUBTASK 72-23-04-710-001-F00

(4) Remove the safety tags and close these circuit breakers:

CAPT Electrical System Panel, P18-2

Row	Col	Number	Name
B	8	C01103	ENGINE 1 START VALVE

F/O Electrical System Panel, P6-2

Row	Col	Number	Name
C	4	C00154	ENGINE 2 START VALVE

——— END OF TASK ———

BOEING PROPRIETARY - Copyright © Unpublished Work - See title page for details

DATE	TAIL NUMBER	STATION	AIRLINE CARD NO.	BOEING CARD NO.
				72-110-02-01

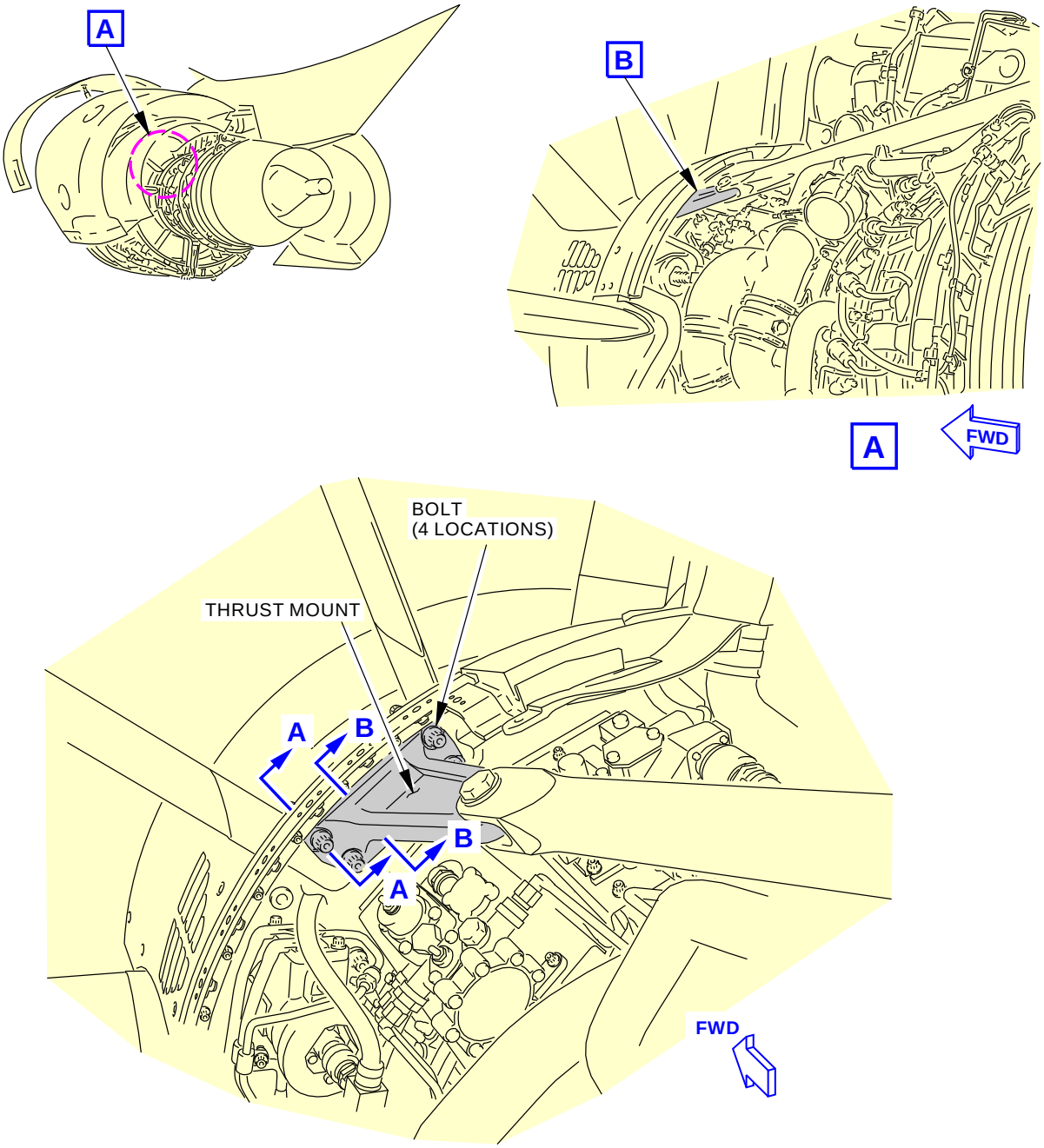

LEFT THRUST MOUNT IS SHOWN WITH THE FAN DUCT PANEL REMOVED
(EXAMPLE)

B

G29745 S0006582447_V2

Thrust Mount Attach Bolt Inspection
Figure 1 (Sheet 1 of 2)

BOEING PROPRIETARY - Copyright © Unpublished Work - See title page for details

DATE	TAIL NUMBER	STATION	AIRLINE CARD NO.	BOEING CARD NO.
				72-110-02-01

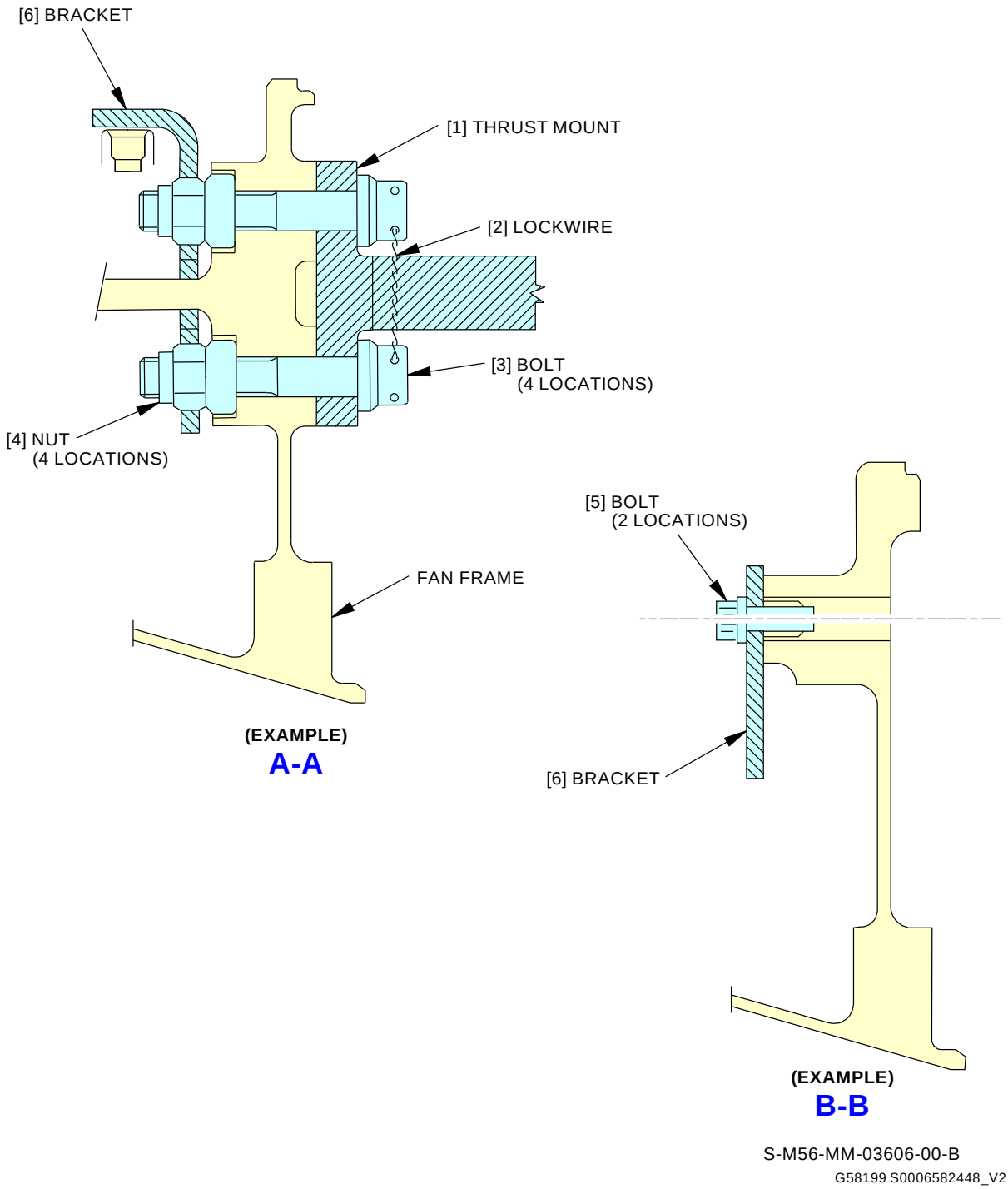

Thrust Mount Attach Bolt Inspection
Figure 1 (Sheet 2 of 2)

BOEING PROPRIETARY - Copyright © Unpublished Work - See title page for details

AIRLINE CARD NO		TITLE			BOEING CARD NO.
		LEFT ENGINE STAGE 1 AND 2 SPOOL			72-130-01-01
DATE	TASK REPLACE				RELATED CARD
TAIL NUMBER	WORK AREA LEFT ENGINE	VERSION 1.1	THRESHOLD LIF LIM	REPEAT	APPLICABILITY AIRPLANE: ALL ENGINE: ALL
STATION	SKILL ENGIN				
		ACCESS 413 414 415 416			ZONE 411

Discard left engine stages 1 and 2 spool at manufacturer's life limit.

BOEING PROPRIETARY - Copyright © Unpublished Work - See title page for details

DATE	TAIL NUMBER	STATION	AIRLINE CARD NO.	BOEING CARD NO.
				72-130-01-01

MECH	INSP

TASK 72-99-99-000-804-F00

1. Discard the Stages 1 and 2 Spool

A. Procedure

SUBTASK 72-99-99-020-003-F00

(1) Remove and discard the stages 1 and stage 2 spool.

——— END OF TASK ———

BOEING PROPRIETARY - Copyright © Unpublished Work - See title page for details

BOEING

737-600/700/800/900
TASK CARDS

AIRLINE CARD NO		TITLE			BOEING CARD NO.
		RIGHT ENGINE STAGE 1 AND 2 SPOOL			72-130-02-01
DATE	TASK REPLACE				RELATED CARD
TAIL NUMBER	WORK AREA RIGHT ENGINE	VERSION 1.1	THRESHOLD LIF LIM	REPEAT	APPLICABILITY AIRPLANE: ALL ENGINE: ALL
STATION	SKILL ENGIN				
		ACCESS 423 424 425 426			ZONE 421

Discard right engine stages 1 and 2 spool at manufacturer's life limit.

BOEING PROPRIETARY - Copyright © Unpublished Work - See title page for details

DATE	TAIL NUMBER	STATION	AIRLINE CARD NO.	BOEING CARD NO.
				72-130-02-01

MECH	INSP

TASK 72-99-99-000-804-F00

1. Discard the Stages 1 and 2 Spool

A. Procedure

SUBTASK 72-99-99-020-003-F00

(1) Remove and discard the stages 1 and stage 2 spool.

——— END OF TASK ———

BOEING PROPRIETARY - Copyright © Unpublished Work - See title page for details

AIRLINE CARD NO		TITLE			BOEING CARD NO.
		LEFT ENGINE STAGE 3 DISK			72-140-01-01
DATE	TASK REPLACE				RELATED CARD
TAIL NUMBER	WORK AREA LEFT ENGINE	VERSION 1.1	THRESHOLD LIF LIM	REPEAT	APPLICABILITY AIRPLANE: ALL ENGINE: ALL
STATION	SKILL ENGIN				
		ACCESS 413 414 415 416			ZONE 411

Discard left engine stage 3 disk at manufacturer's life limit.

BOEING PROPRIETARY - Copyright © Unpublished Work - See title page for details

DATE	TAIL NUMBER	STATION	AIRLINE CARD NO.	BOEING CARD NO.
				72-140-01-01

MECH	INSP

TASK 72-99-99-000-805-F00

1. Discard the Stage 3 Disk

A. Procedure

SUBTASK 72-99-99-020-004-F00

(1) Remove and discard the stage 3 disk.

——— END OF TASK ———

BOEING PROPRIETARY - Copyright © Unpublished Work - See title page for details

BOEING

737-600/700/800/900
TASK CARDS

AIRLINE CARD NO		TITLE			BOEING CARD NO.
		RIGHT ENGINE STAGE 3 DISK			72-140-02-01
DATE	TASK REPLACE				RELATED CARD
TAIL NUMBER	WORK AREA RIGHT ENGINE	VERSION 1.1	THRESHOLD LIF LIM	REPEAT	APPLICABILITY AIRPLANE: ALL ENGINE: ALL
STATION	SKILL ENGIN				
		ACCESS 423 424 425 426			ZONE 421

Discard right engine stage 3 disk at manufacturer's life limit.

EFFECTIVITY	SOURCE	
AKS ALL	MRB	RIGHT ENGINE STAGE 3 DISK

BOEING PROPRIETARY - Copyright © Unpublished Work - See title page for details

DATE	TAIL NUMBER	STATION	AIRLINE CARD NO.	BOEING CARD NO.
				72-140-02-01

MECH	INSP

TASK 72-99-99-000-805-F00

1. Discard the Stage 3 Disk

A. Procedure

SUBTASK 72-99-99-020-004-F00

(1) Remove and discard the stage 3 disk.

——— END OF TASK ———

BOEING PROPRIETARY - Copyright © Unpublished Work - See title page for details

AIRLINE CARD NO		TITLE			BOEING CARD NO.
		LEFT ENGINE STAGES 4 - 9 SPOOL			72-150-01-01
DATE	TASK REPLACE				RELATED CARD
TAIL NUMBER	WORK AREA LEFT ENGINE	VERSION 1.1	THRESHOLD LIF LIM	REPEAT	APPLICABILITY AIRPLANE: ALL ENGINE: ALL
STATION	SKILL ENGIN				
		ACCESS 413 414 415 416			ZONE 411

Discard left engine stages 4 - 9 spool at manufacturer's life limit.

Note: Refer to the engine shop manual, chapter 5, for life limits.

BOEING PROPRIETARY - Copyright © Unpublished Work - See title page for details

DATE	TAIL NUMBER	STATION	AIRLINE CARD NO.	BOEING CARD NO.
				72-150-01-01

MECH	INSP

TASK 72-99-99-000-806-F00

1. Discard the Stages 4 thru 9 Spools

A. Procedure

SUBTASK 72-99-99-020-005-F00

(1) Remove and discard the stages 4 thru 9 spools.

——— END OF TASK ———

BOEING PROPRIETARY - Copyright © Unpublished Work - See title page for details

AIRLINE CARD NO		TITLE			BOEING CARD NO.
		RIGHT ENGINE STAGES 4 - 9 SPOOL			72-150-02-01
DATE	TASK REPLACE				RELATED CARD
TAIL NUMBER	WORK AREA RIGHT ENGINE	VERSION 1.1	THRESHOLD LIF LIM	REPEAT	APPLICABILITY AIRPLANE: ALL ENGINE: ALL
STATION	SKILL ENGIN				
		ACCESS 423 424 425 426			ZONE 421

Discard right engine stages 4 - 9 spool at manufacturer's life limit.

Note: Refer to the engine shop manual, chapter 5, for life limits.

BOEING PROPRIETARY - Copyright © Unpublished Work - See title page for details

DATE	TAIL NUMBER	STATION	AIRLINE CARD NO.	BOEING CARD NO.
				72-150-02-01

MECH	INSP

TASK 72-99-99-000-806-F00

1. Discard the Stages 4 thru 9 Spools

A. Procedure

SUBTASK 72-99-99-020-005-F00

(1) Remove and discard the stages 4 thru 9 spools.

——— END OF TASK ———

BOEING PROPRIETARY - Copyright © Unpublished Work - See title page for details

AIRLINE CARD NO		TITLE			BOEING CARD NO.
		LEFT ENGINE FRONT SHAFT			72-160-01-01
DATE	TASK REPLACE				RELATED CARD
TAIL NUMBER	WORK AREA LEFT ENGINE	VERSION 1.1	THRESHOLD LIF LIM	REPEAT	APPLICABILITY AIRPLANE: ALL ENGINE: ALL
STATION	SKILL ENGIN				
		ACCESS 413 414 415 416			ZONE 411

Discard left engine front shaft at manufacturer's life limit.

Note: Refer to the engine shop manual, chapter 5, for life limits.

BOEING PROPRIETARY - Copyright © Unpublished Work - See title page for details

DATE	TAIL NUMBER	STATION	AIRLINE CARD NO.	BOEING CARD NO.
				72-160-01-01

MECH	INSP

TASK 72-99-99-000-807-F00

1. Discard the Front Shaft

A. Procedure

SUBTASK 72-99-99-020-006-F00

(1) Remove and discard the front shaft.

——— END OF TASK ———

BOEING PROPRIETARY - Copyright © Unpublished Work - See title page for details

AIRLINE CARD NO		TITLE			BOEING CARD NO.
		RIGHT ENGINE FRONT SHAFT			72-160-02-01
DATE	TASK REPLACE				RELATED CARD
TAIL NUMBER	WORK AREA RIGHT ENGINE	VERSION 1.1	THRESHOLD LIF LIM	REPEAT	APPLICABILITY AIRPLANE: ALL ENGINE: ALL
STATION	SKILL ENGIN				
		ACCESS 423 424 425 426			ZONE 421

Discard right engine front shaft at manufacturer's life limit.

Note: Refer to the engine shop manual, chapter 5, for life limits.

BOEING PROPRIETARY - Copyright © Unpublished Work - See title page for details

DATE	TAIL NUMBER	STATION	AIRLINE CARD NO.	BOEING CARD NO.
				72-160-02-01

MECH	INSP

TASK 72-99-99-000-807-F00

1. Discard the Front Shaft

A. Procedure

SUBTASK 72-99-99-020-006-F00

(1) Remove and discard the front shaft.

——— END OF TASK ———

BOEING PROPRIETARY - Copyright © Unpublished Work - See title page for details

AIRLINE CARD NO		TITLE			BOEING CARD NO.
		LEFT ENGINE REAR ROTATING (CDP) SEAL			72-170-01-01
DATE	TASK REPLACE				RELATED CARD
TAIL NUMBER	WORK AREA LEFT ENGINE	VERSION 1.1	THRESHOLD LIF LIM	REPEAT	APPLICABILITY AIRPLANE: ALL ENGINE: ALL
STATION	SKILL ENGIN				
		ACCESS 413 414 415 416			ZONE 411

Discard left engine rear rotating (CDP) seal at manufacturer's life limit.

Note: Refer to the engine shop manual, chapter 5, for life limits.

BOEING PROPRIETARY - Copyright © Unpublished Work - See title page for details

DATE	TAIL NUMBER	STATION	AIRLINE CARD NO.	BOEING CARD NO.
				72-170-01-01

MECH	INSP

TASK 72-99-99-000-808-F00

1. Discard the Rear Rotation (CDP) Seal

A. Procedure

SUBTASK 72-99-99-020-007-F00

(1) Remove and discard the rear rotating (CDP) seal.

——— END OF TASK ———

BOEING PROPRIETARY - Copyright © Unpublished Work - See title page for details

AIRLINE CARD NO		TITLE			BOEING CARD NO.
		RIGHT ENGINE REAR ROTATING (CDP) SEAL			72-170-02-01
DATE	TASK REPLACE				RELATED CARD
TAIL NUMBER	WORK AREA RIGHT ENGINE	VERSION 1.1	THRESHOLD LIF LIM	REPEAT	APPLICABILITY AIRPLANE: ALL ENGINE: ALL
STATION	SKILL ENGIN				
		ACCESS 423 424 425 426			ZONE 421

Discard right engine rear rotating (CDP) seal at manufacturer's life llimit.

Note: Refer to the engine shop manual, chapter 5, for life limits.

BOEING PROPRIETARY - Copyright © Unpublished Work - See title page for details

DATE	TAIL NUMBER	STATION	AIRLINE CARD NO.	BOEING CARD NO.
				72-170-02-01

MECH	INSP

TASK 72-99-99-000-808-F00

1. Discard the Rear Rotation (CDP) Seal

A. Procedure

SUBTASK 72-99-99-020-007-F00

(1) Remove and discard the rear rotating (CDP) seal.

——— END OF TASK ———

BOEING PROPRIETARY - Copyright © Unpublished Work - See title page for details

AIRLINE CARD NO		TITLE **LEFT ENGINE COMBUSTION CHAMBER**			BOEING CARD NO. **72-180-01-01**
DATE	TASK **INSPECTION - DETAILED**				RELATED CARD
TAIL NUMBER	WORK AREA **LEFT ENGINE**	VERSION **1.1** **1.2**	THRESHOLD **6600 FC** **15000 FH**	REPEAT **1600 FC** **4000 FH**	APPLICABILITY AIRPLANE **ALL** ENGINE **ALL NOTE**
STATION	SKILL **ENGIN**				
		ACCESS **413 414 415 416**			ZONE **411**

Borescope inspection of the left engine combustion chamber.

ENGINE NOTE: Task is for Single Annular Combustor engines.

A. References

Reference	Title
AMM 70-10-03-910-801-F00	Temporary Marking Procedures (P/B 201)
AMM 71-00-02-000-801-F00	Power Plant Removal (P/B 401)
AMM 71-00-02-400-801-F00	Power Plant Installation (P/B 401)
AMM 71-11-02-010-801-F00	Open the Fan Cowl Panels (P/B 201)
AMM 71-11-02-410-801-F00	Close the Fan Cowl Panels (P/B 201)
AMM 72-00-00-980-802-F00	Find the Zero Index Mark on the N2 Rotor (P/B 201)
AMM 72-63-01-400-801-F00	Handcranking Drive Cover Installation (P/B 201)
AMM 73-11-04-000-804-F02	Fuel Nozzle Removal (P/B 401)
AMM 73-11-04-000-805-F01	Fuel Nozzle Removal (P/B 401)
AMM 73-11-04-400-804-F02	Fuel Nozzle Installation (P/B 401)
AMM 73-11-04-400-805-F01	Fuel Nozzle Installation (P/B 401)
AMM 74-21-02-000-801-F00	Main Igniter Plug Removal (P/B 401)
AMM 74-21-02-400-801-F00	Main Igniter Plug Installation (P/B 401)
AMM 78-31-00-010-801-F00	Open the Thrust Reverser (Selection) (P/B 201)
AMM 78-31-00-010-804-F00	Close the Thrust Reverser (Selection) (P/B 201)
AMM 78-31-00-040-802-F00	Thrust Reverser Deactivation For Ground Maintenance (P/B 201)
AMM 78-31-00-440-803-F00	Thrust Reverser Activation After Ground Maintenance (P/B 201)
FIM 71-05 TASK 801	Birdstrike/FOD in Engine - Fault Isolation

B. Consumable Materials

Reference	Description	Specification
D00601 [CP2101]	High-temperature graphite compound	SAE AMS 2518
D50032 [CP1064]	Compound - Antiseize - Milk of Magnesia	
D50034 [CP2619]	Compound - Antiseize - Pure Nickel Special, Never - Seez	CFM CP2619
G01043	Cloth - Lint-free	

BOEING PROPRIETARY - Copyright © Unpublished Work - See title page for details

(Continued)

Reference	Description	Specification
G02345 [CP8001]	Wire - Safety, 0.032 Inch (0.8 mm) Diameter	CFM CP8001, AMS 5687
G02481 [CP2801]	Marker - Temporary	
G50065 [CP8006]	Cable, Safety, Stainless Steel, 0.032 inch (0.813 mm) Diameter	M50 TF 9 CL-A

C. Tools/Equipment

NOTE: When more than one tool part number is listed under the same "Reference" number, the tools shown are alternates to each other within the same airplane series. Tool part numbers that are replaced or non-procurable are preceded by "Opt:", which stands for Optional.

Reference	Description
COM-2195	Set - Borescope Rigid, Olympus Part #: 856A1320P04 Supplier: 58828
COM-2196	Set - Borescope Fiber, 6 mm diameter Part #: 856A1321P05 Supplier: 58828 Part #: 856A1321P06 Supplier: 58828 Opt Part #: 856A1321P03 Supplier: 58828
COM-4302	Set - Borescope Rigid, Wolf Part #: 856A1320P05 Supplier: 58828
COM-4303	Set - Borescope Rigid, Lenox Part #: 856A1320P06 Supplier: 58828
COM-4304	Set - Borescope Rigid, ITI USA Part #: 856A1320P07 Supplier: 58828
SPL-2197	Light Source - Borescope, Lenox (150W) Part #: 856A1322P02 Supplier: 58828
SPL-2198	Kit - Borescope Guide, HP Turbine, CFM56 Engines Part #: 856A1310G01 Supplier: 58828
SPL-2207	Guide Tube - Borescope, HPT Shroud, CFM56 Engines Part #: 856A1351P01 Supplier: 58828
SPL-4305	Light Source - Borescope, Olympus (150W) Part #: 856A1322P03 Supplier: 58828
SPL-4306	Light Source - Borescope, Wolf (300W) Part #: 856A1322P04 Supplier: 58828
SPL-4307	Light Source - Borescope, Machida Part #: 856A1322P07 Supplier: 58828
SPL-4308	Light Source - Borescope, ITI USA (150W) Part #: 856A1322P08 Supplier: 58828
STD-10711	Shop Vacuum (400Hz if using aircraft power)
STD-585	Mat - Protective, 3/8 Inch (9.5 mm) Minimum Thickness, Minimum 42x60 Inches (1x1.5 meters) with Warning Streamers

BOEING PROPRIETARY - Copyright © Unpublished Work - See title page for details

TASK 72-00-00-200-802-F00

1. **Borescope Inspection Preparation**
(Figure 1 and Figure 2)

A. General

(1) This task provides the instructions on how to prepare for the borescope inspection.

B. Borescope Inspection Preparation

SUBTASK 72-00-00-860-001-F00

(1) For the applicable engine, install a DO-NOT-OPERATE tag on the start lever.

SUBTASK 72-00-00-860-080-F00

(2) For Engine 1, open this circuit breaker and install a safety tag:

CAPT Electrical System Panel, P18-2

Row	Col	Number	Name
B	8	C01103	ENGINE 1 START VALVE

SUBTASK 72-00-00-860-081-F00

(3) For Engine 2, open this circuit breaker and install a safety tag:

F/O Electrical System Panel, P6-2

Row	Col	Number	Name
C	4	C00154	ENGINE 2 START VALVE

SUBTASK 72-00-00-860-082-F00

(4) Do these tasks in sequence to safely open the left and right thrust reversers on the applicable engine:

WARNING: DO THE DEACTIVATION PROCEDURE FOR THE THRUST REVERSER TO PREVENT THE OPERATION OF THE THRUST REVERSER. ACCIDENTAL OPERATION OF THE THRUST REVERSER CAN CAUSE INJURIES TO PERSONS OR DAMAGE TO EQUIPMENT.

(a) Do this task: Thrust Reverser Deactivation for Ground Maintenance, AMM TASK 78-31-00-040-802-F00.

(b) Open the left and right fan cowl panels (AMM TASK 71-11-02-010-801-F00).

WARNING: OBEY THE INSTRUCTIONS IN THE PROCEDURE TO OPEN THE THRUST REVERSERS. IF YOU DO NOT OBEY THE INSTRUCTIONS, INJURIES TO PERSONS AND DAMAGE TO EQUIPMENT CAN OCCUR.

(c) Open the left and right thrust reversers (AMM TASK 78-31-00-010-801-F00).

BOEING PROPRIETARY - Copyright © Unpublished Work - See title page for details

MECH	INSP

SUBTASK 72-00-00-480-001-F00

(5) Refer to the applicable steps and borescope equipment to prepare for the inspection:

NOTE: For this procedure, borescope equipment is used for all inspections but not for the axial preload check of the Stage 4 LPT blades.

NOTE: Refer to the CFM Illustrated Tool and Equipment manual for the current part number for all the borescope equipment.

NOTE: Alternative borescope equipment that is as good or better than the CFM Borescope Specification is permitted for use. Refer to the CFM Non-Destructive Test Manual (CFM-TP-NT.11), Borescope Inspection, Part 7, for requirements.

CAUTION: MAKE SURE THAT THE POWER SWITCH IS IN THE OFF POSITION AND THE LIGHT INTENSITY CONTROL IS SET AT MINIMUM BEFORE YOU CONNECT THE LIGHT SOURCE TO THE POWER SUPPLY. MAKE SURE THE LIGHT SOURCE AND THE POWER SUPPLY ARE CORRECTLY ATTACHED TO A GROUND. DAMAGE TO THE EQUIPMENT CAN OCCUR.

(a) Connect the applicable light source to a power source that is grounded.

(b) You will use these borescope tools to do a complete borescope inspection of the engine:

NOTE: For more data on the use of this borescope equipment, refer to CFM NDTM 72-00-00, Part 7.

It is not recommended to do a borescope inspection at temperatures more than 150 degrees F (65.6 degrees C). You can do a dry motor to increase the engine cool down rate.

1) The applicable borescope and light source
   a) Rigid Borescope, COM-2195 and light source, SPL-4305
   b) Rigid Borescope, COM-4302 and light source, SPL-4306
   c) Rigid Borescope, COM-4303 and light source, SPL-2197
   d) Rigid Borescope, COM-4304 and light source, SPL-4308
   e) alternative light source, SPL-4307
2) The monitor, MSE-64
3) The fiber borescope, COM-2196 to do the inspection of these areas:
   a) The combustion chamber
   b) The HPT nozzle guide vanes
   c) The HPT blades.
4) The borescope guide kit, SPL-2198 and the borescope guide tube, SPL-2207 to do the inspection of these areas:
   a) The HPT nozzle guide vanes
   b) The HPT blades.

BOEING PROPRIETARY - Copyright © Unpublished Work - See title page for details

DATE	TAIL NUMBER	STATION	AIRLINE CARD NO.	BOEING CARD NO.
				72-180-01-01

MECH	INSP

SUBTASK 72-00-00-210-001-F00

(6) If it is necessary to index the N2 rotor, do this task: Find the Zero Index Mark on the N2 Rotor, AMM TASK 72-00-00-980-802-F00.

NOTE: It is recommended that you stop the N2 rotor when you put each blade in position for inspection. This will permit you to do a full inspection of each blade.

SUBTASK 72-00-00-210-002-F00

(7) If it is necessary to turn or index the N1 rotor, do these steps:

(a) Put a protective mat, STD-585 in the inlet cowl.

(b) Find the number one fan blade.

NOTE: The fan blade 1 is adjacent to a machined dimple in the aft area of the rear spinner cone.

(c) Use a marker, G02481 [CP2801] to make a mark to identify the number one fan blade (AMM TASK 70-10-03-910-801-F00).

(d) Align the leading edge of the number one fan blade with the T12 temperature sensor.

NOTE: The T12 temperature sensor is approximately at the 10:30 o'clock position as you look in the inlet cowl.

SUBTASK 72-00-00-210-129-F00

(8) Do a general visual inspection of the primary plug assembly for oil puddling.

NOTE: An oil puddle in the exhaust system can occur after the engine is dry or wet motored (refer to task 71–71–00–200–801–F00).

SUBTASK 72-00-00-100-016-F00

(9) If oil puddling is found, remove the oil from the primary plug:

(a) Clean oil from the surface with a lint-free cloth, G01043. A vacuum, STD-10711 can be used to remove unwanted oil.

——— END OF TASK ———

BOEING PROPRIETARY - Copyright © Unpublished Work - See title page for details

TASK 72-00-00-200-805-F00

MECH	INSP

2. Combustion Section Borescope Inspection

(Figure 1, Figure 3, Figure 4, Figure 4 and Figure 5)

A. General

(1) This task provides the instructions on how to examine the combustion section with a borescope.

B. Prepare for the Inspection

SUBTASK 72-00-00-210-024-F00

(1) Do this task: Borescope Inspection Preparation, TASK 72-00-00-200-802-F00.

SUBTASK 72-00-00-010-004-F00

(2) Remove the S13 and S15 borescope plugs:

NOTE: To do an initial inspection, it is only necessary to remove the S13 and S15 borescope plugs. If you find damage, you must remove the main igniter plugs and the other borescope plugs to do a complete inspection.

SUBTASK 72-00-00-010-005-F00

(3) If it is necessary to do a complete inspection, do these steps to remove the main igniter plugs and the other borescope plugs:

NOTE: The port for the 4:00 o'clock main igniter plug is referred to as the S10 borescope port. The port for the 8:00 o'clock main igniter plug is referred to as the S11 borescope port.

(a) Do this task: Main Igniter Plug Removal, AMM TASK 74-21-02-000-801-F00.

(b) Remove the S12 and S14 borescope plugs.

SUBTASK 72-00-00-210-027-F00

(4) Do these steps to prepare for the inspection of the combustion section:

(a) Connect the applicable rigid borescope to the light source.

1) Connect Rigid Borescope, COM-2195 and light source, SPL-4305.

2) Connect Rigid Borescope, COM-4302 and light source, SPL-4306.

3) Connect Rigid Borescope, COM-4303 and light source, SPL-2197.

4) Connect Rigid Borescope, COM-4304 and light source, SPL-4308.

5) Use the rigid borescope with the yellow band to get a general view of the combustion chamber.

6) Use the rigid borescope with the green band as follows:

a) Use the borescope to view circumferentially around the combustion chamber.

b) Use the borescope to view the inner liner that is adjacent to the borescope port.

7) Use the rigid borescope with the blue band to view the outer liner that is adjacent the borescope port.

8) Use the rigid borescope with the black band to view the aft ends of the inner and outer liners.

BOEING PROPRIETARY - Copyright © Unpublished Work - See title page for details

9) Use the rigid borescope with the black band to evaluate defects that you found with the other borescopes.

10) Use the fiberscope to view the outside of the outer liner.

(b) Make sure that you adjust the borescope correctly.

(c) Turn the lightsource ON.

SUBTASK 72-00-00-210-028-F00

(5) If it is necessary to do an inspection of the cold-side of the outer liner, do these steps to prepare for the inspection:

(a) Connect the borescope, COM-2196, to the applicable light source.

(b) Make sure that you adjust the borescope correctly.

(c) Turn the light source ON.

C. Combustion Section Borescope Inspection

SUBTASK 72-00-00-210-118-F00

(1) Examine all surfaces as follow:

(a) Discoloration

1) Permitted.

(b) Carbon accumulation

1) Permitted.

(c) Missing, chipped or spalled areas of the thermal barrier coating

1) Permitted.

SUBTASK 72-00-00-210-029-F00

(2) Examine the dome assembly as follows:

(a) Distortion of the deflector or the sleeve

1) Permitted.

(b) Radial cracks in the spectacle plate.

1) Permitted with these conditions:

a) The cracks are not connected.

b) The cracks are less than 2.0 inches (50.8 mm) in length.

2) A continue-in-service limit of 25 flight hours is permitted with these conditions:

a) The cracks are not connected.

b) The cracks are less than 2.5 inches (63.5 mm) in length.

(c) Circumferential cracks in the spectacle plate

1) Permitted with these conditions:

a) The cracks are less than 3.0 inches (76 mm) in length.

b) The minimum distance between cracks is not less than 6.0 inches (152 mm).

2) A continue-in-service limit of 25 flight hours, is permitted with these conditions:

a) The cracks are less than 3.6 inches (91 mm) in length.

BOEING PROPRIETARY - Copyright © Unpublished Work - See title page for details

DATE	TAIL NUMBER	STATION	AIRLINE CARD NO.	BOEING CARD NO. 72-180-01-01

MECH	INSP

b) The minimum distance between cracks is not less than 4.8 inches (125 mm).

(d) Cracks in the spectacle plate that are connected

1) One radial crack can be connected to one circumferential crack that extends between adjacent deflectors with these conditions:

a) The radial crack is less than 2.0 inches (50.8 mm) in length.

b) The circumferential crack is less than 3.0 inches (76 mm) in length.

c) The minimum distance between cracks is not less than 6.0 inches (152 mm).

2) A continue-in-service limit of 25 flight hours is permitted with these conditions:

a) The radial crack is not more than 2.5 inches (63.5 mm) in length.

b) The circumferential crack is not more than 3.6 inches (91 mm) in length.

c) The minimum distance between cracks is not less than 4.8 inches (125 mm).

(e) Missing material from the spectacle plate

1) A maximum area of 0.060 x 0.060 inch (1.52 x 1.52 mm) is permitted at the point where the cracks connect.

2) A continue-in-service limit of 25 flight hours is permitted if the damage is more than the limits.

(f) Radial cracks in the deflector or the sleeve

1) Permitted, if they are less than 0.5 inch (13 mm) in length.

2) A continue-in-service limit of 25 cycles is permitted if the cracks are not more than 0.6 inch (16 mm) in length.

(g) Circumferential cracks in the deflector or sleeve

1) There is no limit to the number of cracks if they are less than 0.75 inch (19 mm) in length.

2) A continue-in-service limit of 25 cycles is permitted if the cracks are not more than 0.9 inch (23 mm) in length.

(h) Cracks that connect in the deflector or sleeve

1) One radial and one circumferential crack that connect are permitted, with these conditions:

a) The radial crack is less than 0.5 inch (13 mm) in length.

b) The circumferential crack is less than 0.75 inch (19 mm) in length.

2) A continue-in-service limit of 25 cycles is permitted with these conditions:

a) The radial crack is not more than 0.6 inch (16 mm) in length.

b) The circumferential crack is not more than 0.9 (23 mm) in length.

(i) Missing material from the extensions on the deflector

NOTE: Examine the deflector surface as close to perpendicular as possible.

BOEING PROPRIETARY - Copyright © Unpublished Work - See title page for details

MECH	INSP

1) Up to 15-exposed dome cooling holes permitted in each deflector quadrant (Figure 4, View C2).
2) Not more than 20-exposed dome cooling holes in any deflector (Figure 4, View C3).
3) Do this inspection again after 750 cycles if up to 25 dome cooling holes total in any deflector are exposed.
4) More than 25-exposed dome cooling holes total in any deflector, the continue-in-service limit is 25 cycles.

(j) Missing material from the extensions on the sleeve
1) Permitted if the depth is not more than 0.20 inch (5.08 mm).
2) A continue-in-service limit of 50 cycles is permitted if the depth is not more than 0.240 inch (6.10 mm).

(k) Burn holes
1) 3 areas for each dome are permitted if the maximum area of each hole is not more than 1.0 x 1.0 inch (25 x 25 mm).
2) A continue-in-service limit of 25 cycles is permitted with these conditions:
a) There are not more than 3 areas on each dome that have missing material.
b) Each area is not more than 1.2 x 1.2 inch (30 x 30 mm).

(l) Cracks in the primary swirl nozzle
1) Permitted.

(m) Cracks and missing material from the secondary swirl nozzle venturi.
1) Any number of indications (cracks) permitted.
2) Any number with missing material less than 0.10 inch (2.5 mm) in width permitted(Figure 4 , View C1) .
3) Up to six locations up to 0.30 inch (7.6 mm) total width of missing material permitted.
4) Do this inspection again after 750 cycles if; up to ten locations with 0.30 inch (7.6 mm) total width of missing material.
5) If the width exceeds 0.30 inch (7.6 mm) or more than ten locations over 0.10 inch (2.5 mm) , the Continue-In-Service limit is 25 cycles.

SUBTASK 72-00-00-210-030-F00

(3) Examine the inner and outer liners as follow:

(a) Axial cracks on the outer liner

NOTE: The dome band is counted as a panel.

NOTE: Axial cracks that become circumferential cracks for a length that is less than one dilution land, should be counted as one continuous axial crack.

1) Cracks that go across only one panel are permitted.
2) A maximum of 4 cracks that go across more than one panel are permitted with this condition

BOEING PROPRIETARY - Copyright © Unpublished Work - See title page for details

DATE	TAIL NUMBER	STATION	AIRLINE CARD NO.	BOEING CARD NO. 72-180-01-01

MECH	INSP

a) The cracks cannot go across more than 3 panels.

3) If a crack is longer than 3 panels, do the borescope inspection of the cold side of the outer liner.

NOTE: Do the inspection of the cold side only if you have no more than 3 cracks that are longer than 3 panels. More than 3 cracks that are longer than 3 panels are not permitted.

4) A continue-in-service limit of 100 cycles is permitted with these conditions:

a) There are not more than 5 cracks that go across more than one panel.

b) A crack cannot go across more than 5 panels in sequence.

(b) The cold side of the outer liner for cracks.

NOTE: Do this inspection of the cold side only if you find not more than 3 cracks that are longer than 3 panels during the hot side inspection. More than 3 cracks that are longer than 3 panels is not permitted.

1) The cracks must not go through more than one of the last three cooling ribs (cooling ribs 4, 5, or 6).

2) Cooling rib 1 must not be cracked through.

3) Do this inspection again after 750 cycles.

4) A continue-in-service limit of 25 cycles is permitted with these conditions:

a) There are no more than 5 cracks that go across more than one panel.

b) There are no cracks that go across more than 5 panels.

c) At least one of the cooling ribs (3, 4, 5, or 6) do not have cracks that go through to the cold side.

d) Cooling rib 1 does not have a crack that goes through.

(c) Axial cracks on the inner liner

1) Permitted if the cracks do not go across more than one panel.

2) There are not more than 4 cracks that go across more than one panel.

3) Only one crack can go across more than three panels with these conditions:

a) The crack does not go across more than 4 panels.

b) The crack is connected to a hole caused by burn-through or missing material which is not more than 3 times the size of a dilution hole.

c) The crack is not connected to a circumferential crack that is more than 0.50 inch (12.7 mm) in length.

d) Do this inspection again after each 750 cycles.

4) A continue-in-service limit of 100 cycles is permitted with these conditions:

a) There are not more than 5 cracks that go across more than one panel.

b) There are no cracks that go across more than 4 panels in sequence.

BOEING PROPRIETARY - Copyright © Unpublished Work - See title page for details

DATE	TAIL NUMBER	STATION	AIRLINE CARD NO.	BOEING CARD NO.
				72-180-01-01

MECH	INSP

(d) Circumferential cracks on the inner and outer liners

NOTE: Use the length of the dilution lands to help you find the length of the cracks.

NOTE: For the dome bands and panel 2 of the inner and outer liner, use the dilution lands (the distance between the edges of the dilution holes) on panel 1. For the panels 4 and 5 on the outer liner and panel 4 of the inner liner, use the dilution lands on panel 3.

1) Permitted with these conditions:
   a) The cracks are not longer than 2 dilution lands.
   b) There are no more than 2 adjacent cracks in a dilution land.
   c) The cracks are separated by a minimum of 3 dilution lands that do not have cracks.
2) A continue-in-service limit of 25 cycles is permitted with these conditions:
   a) The cracks are not longer than 3 dilution lands.
   b) The cracks are separated by a minimum of 3 dilution lands that do not have cracks.

(e) The inner and outer liners for axial and circumferential cracks that connect

1) One axial and one circumferential crack that connect are permitted, if the cracks are in the previous limits.
2) Multiple axial and circumferential cracks that connect are permitted, if:
   a) The cracks are contained in one panel.
   b) The cracks are contained in one dilution land area.
   c) There are not more than two locations in the adjacent panels that are axially aligned.
   d) The locations are separated by a minimum of 3 dilution lands that do not have cracks.
   e) There are not more than 5 locations with connected cracks.
3) A continue-In-service limit of 100 cycles is permitted with this condition:
   a) The cracks do not exceed their individual continue-in-service limits.

(f) Holes that are burned through

1) All quantities of holes total for the two liners are permitted with these conditions:
   a) There are not more than two holes in the adjacent panels that are axially aligned.
   b) The maximum size of all holes are not more than 5 times the size of a dilution hole.
   c) The total area of burn through does not to exceed 15 times the size of a dilution hole.

BOEING PROPRIETARY - Copyright © Unpublished Work - See title page for details

2) If the current condition exceeds the above limits but does not exceed the continue-in-service limit, repeat this borescope inspection of the holes that are burned through on the inner and outer liner every 250 cycles until the current condition exceeds the continue-in-service limit.

3) A continue-in-service limit of 100 cycles is permitted with these conditions:

a) There are more than three holes in the adjacent panels that are axially aligned.

b) The maximum size of all holes are not more than 6 times the size of the dilution hole.

c) The total area of burn through exceeds 24 times the size of a dilution hole.

(g) Missing overhangs on the inner and outer liners

1) 14 areas in each liner are permitted with these conditions:

a) Each area is not more than 2 times the size of the dilution hole.

b) They are not axially aligned across more than 3 adjacent panels.

2) A continue-in-service limit of 25 cycles is permitted with these conditions:

a) There are not more than 17 areas in each liner.

b) Each area is not more than 2 times the size of the dilution hole.

c) They are not axially aligned across more than 3 areas in adjacent panels.

(h) Distortion of the inner and outer liners

1) All distortions are permitted if each is not distorted more than 0.5 inch (12.7 mm) from the original contour.

2) A continue-in-service limit of 25 cycles is permitted if the distortion is not more than 0.7 inch (17 mm) from the original contour for each area.

SUBTASK 72-00-00-210-115-F00

(4) If there was a birdstrike/FOD, do these steps to examine the combustion chamber:

(a) Remove the borescope plugs from the combustor as follows:

1) Borescope plug S15 at 10:00 o'clock position

2) Borescope plug S12 at 1:00 o'clock position

3) Borescope plug S13 at 3:00 o'clock position

4) Borescope plug S14 at 6:00 o'clock position.

(b) Do a borescope or fiberscope inspection of the nozzle and swirlers as follows:

1) Put the borescope into one of the ports and turn on the light source for the borescope.

2) Look at the swirler and nozzle area in a clockwise and counter-clockwise direction.

NOTE: When you use a rigid borescope, you will only see one swirler and two deflectors in a clockwise or counter-clockwise direction.

3) Do the fuel nozzle tip inspection as follows:

BOEING PROPRIETARY - Copyright © Unpublished Work - See title page for details

a) The primary tips must be in the internal diameter of the primary swirler.

b) If the damaged fuel nozzle is not in the internal diameter of the primary swirler, replace the engine (AMM TASK 71-00-02-000-801-F00 and AMM TASK 71-00-02-400-801-F00).

4) Look at the opening between the forward edge of the deflector plate and the spectacle plate.

a) The clearance must be more than 0.080 inch (2.03 mm).

b) The clearance must not be more than 0.300 inch (7.62 mm).

c) If the opening is more than 0.300 inch (7.62 mm), examine the area around the nozzle and the outer side of the combustion chamber.

5) Do the inspection through the other ports.

6) If one or more of the above deflector plates are out of limits, and if you are sure the tip is in the correct position, do these steps:

a) Identify the fuel nozzle adjacent to the damaged area.

b) Remove the borescope.

c) Remove the adjacent fuel nozzle (AMM TASK 73-11-04-000-805-F01 or AMM TASK 73-11-04-000-804-F02).

d) Examine the fuel nozzle for damage.

e) If the fuel nozzle is in the internal diameter and does not touch the sides, continue to use the engine.

f) If the fuel nozzle is damaged, replace the fuel nozzle (AMM TASK 73-11-04-400-805-F01 or AMM TASK 73-11-04-400-804-F02)

(c) It is recommended (not mandatory) to do a one-time borescope inspection of the HPT nozzle leading edges at 400-800 cycles after the birdstrike event:

1) If no leading-edge distress is seen, go back to the usual borescope inspection interval.

2) If you can see missing material or burn through on the HPT nozzle leading-edge wall, contact CFMI and, do this task: Birdstrike/FOD in Engine - Fault Isolation, FIM 71-05 TASK 801.

SUBTASK 72-00-00-080-003-F00

(5) When the inspection is complete, remove the borescope equipment.

(a) Turn the light source to OFF, but keep the blower ON until the lamp and case are cool.

BOEING PROPRIETARY - Copyright © Unpublished Work - See title page for details

DATE	TAIL NUMBER	STATION	AIRLINE CARD NO.	BOEING CARD NO.
				72-180-01-01

MECH	INSP

D. Put the Airplane Back to Its Usual Condition

SUBTASK 72-00-00-210-032-F00

CAUTION: MAKE SURE THAT THE BORESCOPE PLUGS ARE INSTALLED IN THE CORRECT PORT LOCATIONS. ENGINE DAMAGE CAN OCCUR IF A BORESCOPE PLUG IS NOT INSTALLED IN THE CORRECT LOCATION.

(1) Do these steps to install the borescope plugs as follow:

NOTE: The borescope plug to the LPT stage 1 and combustion case have the same thread size. The stem of the borescope plug to the LPT stage 1 nozzle will be burned away if it is installed in the borescope port for the combustion case.

(a) Lubricate the threads of the borescope plugs with graphite compound, D00601 [CP2101], pure nickel special compound, D50034 [CP2619] or milk of magnesia compound, D50032 [CP1064].

(b) Install the borescope plugs.

1) Tighten each borescope plug to 57-63 pound-inches (6.5-7.1 Newton-meters).

2) Install a safety wire, G02345 [CP8001] or cable, G50065 [CP8006] on each borescope plug.

SUBTASK 72-00-00-210-033-F00

(2) If it is necessary, do this task: Main Igniter Plug Installation, AMM TASK 74-21-02-400-801-F00.

SUBTASK 72-00-00-210-034-F00

(3) If the borescope inspection is complete, do this task: Put the Airplane Back to Its Usual Condition, TASK 72-00-00-200-814-F00.

END OF TASK

BOEING PROPRIETARY - Copyright © Unpublished Work - See title page for details

MECH	INSP

TASK 72-00-00-200-814-F00

3. Put the Airplane Back to Its Usual Condition

A. General

(1) This task provides the instructions on how to put the airplane back to its usual condition after an inspection.

B. Put the Airplane Back to Its Usual Condition

SUBTASK 72-00-00-080-009-F00

CAUTION: MAKE SURE THERE ARE NO TOOLS, PARTS, OR OTHER UNWANTED MATERIAL IN THE INLET COWL. IF YOU DO NOT OBEY THESE INSTRUCTIONS, YOU CAN CAUSE DAMAGE TO THE ENGINE.

(1) Remove the protective mat, STD-585 from the inner surface of the inlet cowl.

SUBTASK 72-00-00-210-100-F00

(2) Disassemble the borescope equipment as follows:

(a) Turn the light source to OFF.

1) Keep the blower ON until the lamp and case are cool.

(b) Make sure that the power switch is OFF.

(c) Make sure that the light intensity control is set to minimum.

(d) Disconnect the power supply and the ground.

(e) Disconnect the extension and the viewer from the borescope.

(f) Disconnect the borescope from the fiber light cable.

(g) Disconnect the fiber light cable from the light source.

SUBTASK 72-00-00-210-101-F00

CAUTION: MAKE SURE THAT YOU INSTALL THE COVER ON THE GEARBOX. IF YOU DO NOT INSTALL THE COVER, ENGINE OIL LEAKS CAN OCCUR DURING OPERATION AND ENGINE DAMAGE CAN OCCUR.

(3) If not already done, do this task: Handcranking Drive Cover Installation, AMM TASK 72-63-01-400-801-F00.

SUBTASK 72-00-00-410-045-F00

WARNING: OBEY THE INSTRUCTIONS IN THE PROCEDURE TO CLOSE THE THRUST REVERSERS. IF YOU DO NOT OBEY THE INSTRUCTIONS, INJURIES TO PERSONS AND DAMAGE TO EQUIPMENT CAN OCCUR.

(4) Do these tasks in sequence to safely close the left and right thrust reversers:

(a) Do this task: Close the Thrust Reverser (Selection), AMM TASK 78-31-00-010-804-F00.

(b) Do this task: Close the Fan Cowl Panels, AMM TASK 71-11-02-410-801-F00.

(c) Do this task: Thrust Reverser Activation after Ground Maintenance, AMM TASK 78-31-00-440-803-F00.

BOEING PROPRIETARY - Copyright © Unpublished Work - See title page for details

DATE	TAIL NUMBER	STATION	AIRLINE CARD NO.	BOEING CARD NO.
				72-180-01-01

MECH	INSP

SUBTASK 72-00-00-860-078-F00

(5) For Engine 1, remove the safety tag and close this circuit breaker:

CAPT Electrical System Panel, P18-2

Row	Col	Number	Name
B	8	C01103	ENGINE 1 START VALVE

SUBTASK 72-00-00-860-079-F00

(6) For Engine 2, remove the safety tag and close this circuit breaker:

F/O Electrical System Panel, P6-2

Row	Col	Number	Name
C	4	C00154	ENGINE 2 START VALVE

SUBTASK 72-00-00-860-006-F00

(7) On the applicable engine, remove the DO-NOT-OPERATE tag from the start lever.

——— END OF TASK ———

BOEING PROPRIETARY - Copyright © Unpublished Work - See title page for details

DATE	TAIL NUMBER	STATION	AIRLINE CARD NO.	BOEING CARD NO.
				72-180-01-01

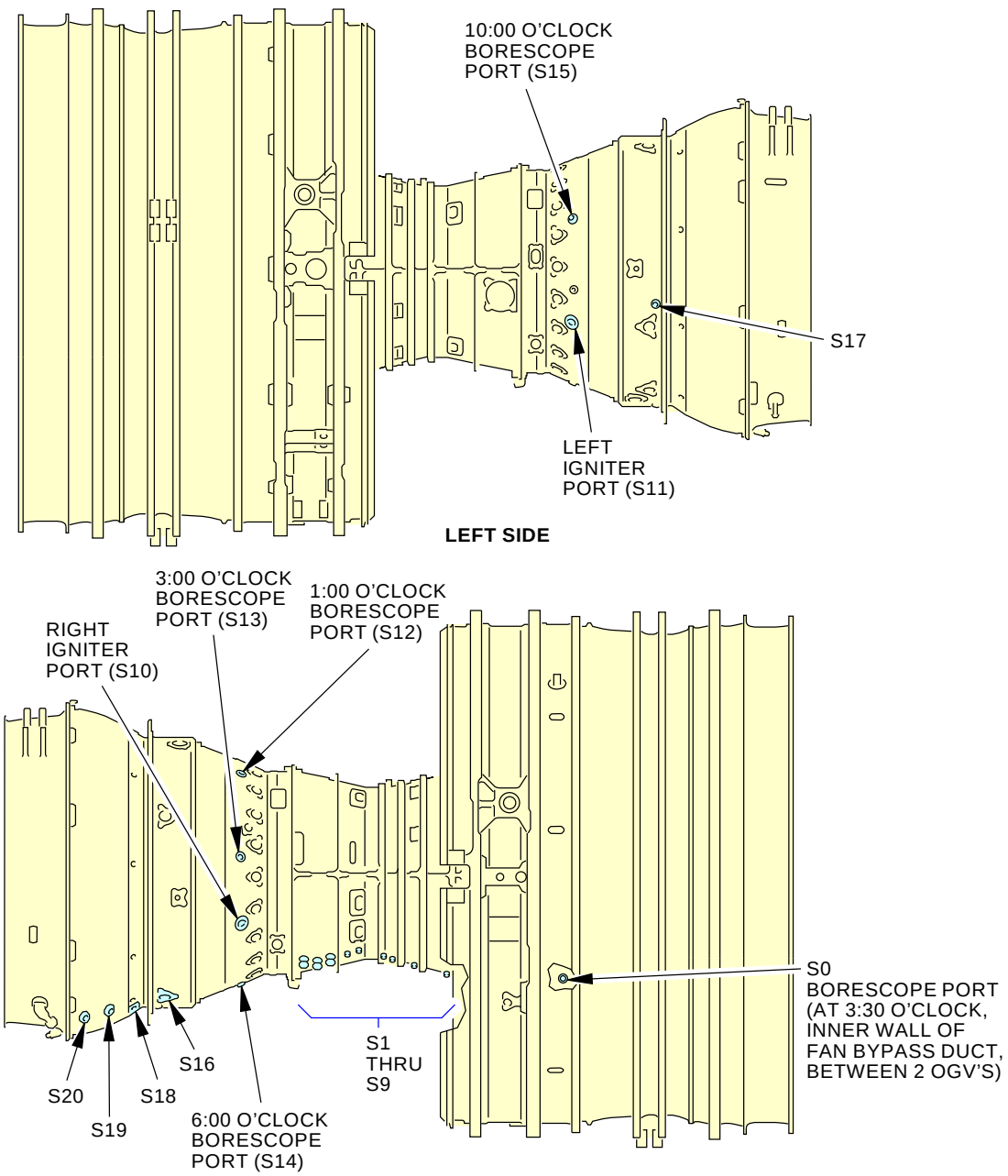

NOTE:

SOME ENGINE COMPONENTS
REMOVED FOR CLARITY.

S-M56-MM-03504-00-B
H50646 S0006582226_V2

Borescope Port Locations
Figure 1

BOEING PROPRIETARY - Copyright © Unpublished Work - See title page for details

DATE	TAIL NUMBER	STATION	AIRLINE CARD NO.	BOEING CARD NO.
				72-180-01-01

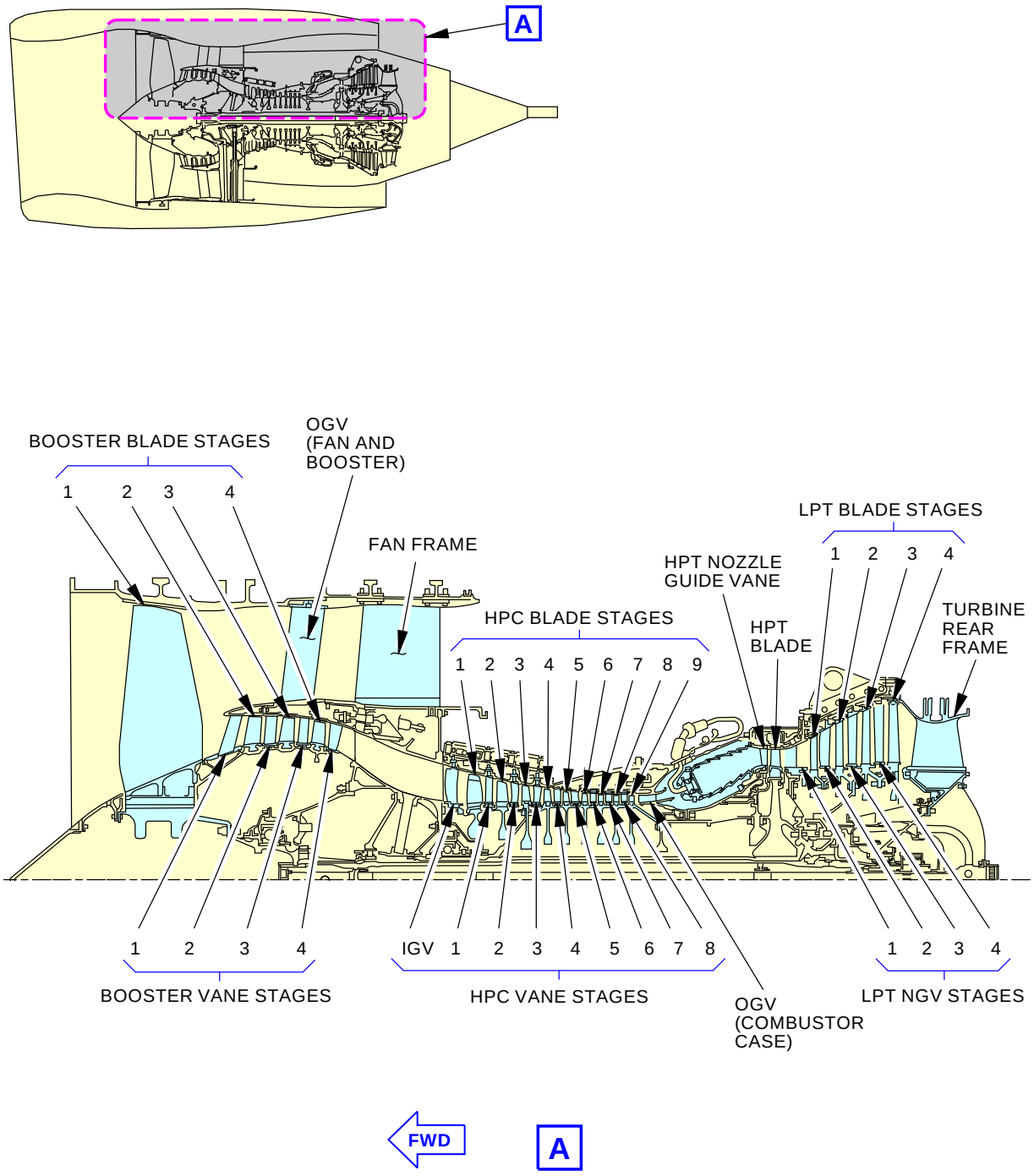

G47263 S0006582229_V3

Engine Airfoil Count
Figure 2 (Sheet 1 of 2)

BOEING PROPRIETARY - Copyright © Unpublished Work - See title page for details

NOMENCLATURE	STAGE	NUMBER OF BLADES
FAN AND BOOSTER	1	24
	2	74
	3	78
	4	74
HIGH PRESSURE COMPRESSOR (HPC)	1	38
	2	53
	3	60
	4	68
	5	75
	6	82
	7	82
	8	80
	9	76
HIGH PRESSURE TURBINE (HPT) NON-7BE ENGINE		80
HIGH PRESSURE TURBINE HPT 7BE ENGINE		76
LOW PRESSURE TURBINE (LPT) NON-7BE ENGINE	1	162
	2	150
	3	150
	4	134
LOW PRESSURE TURBINE LPT 7BE ENGINE	1	154
	2	134
	3	136
	4	138

G48151 S0006582230_V4

Engine Airfoil Count
Figure 2 (Sheet 2 of 2)

BOEING PROPRIETARY - Copyright © Unpublished Work - See title page for details

DATE	TAIL NUMBER	STATION	AIRLINE CARD NO.	BOEING CARD NO.
				72-180-01-01

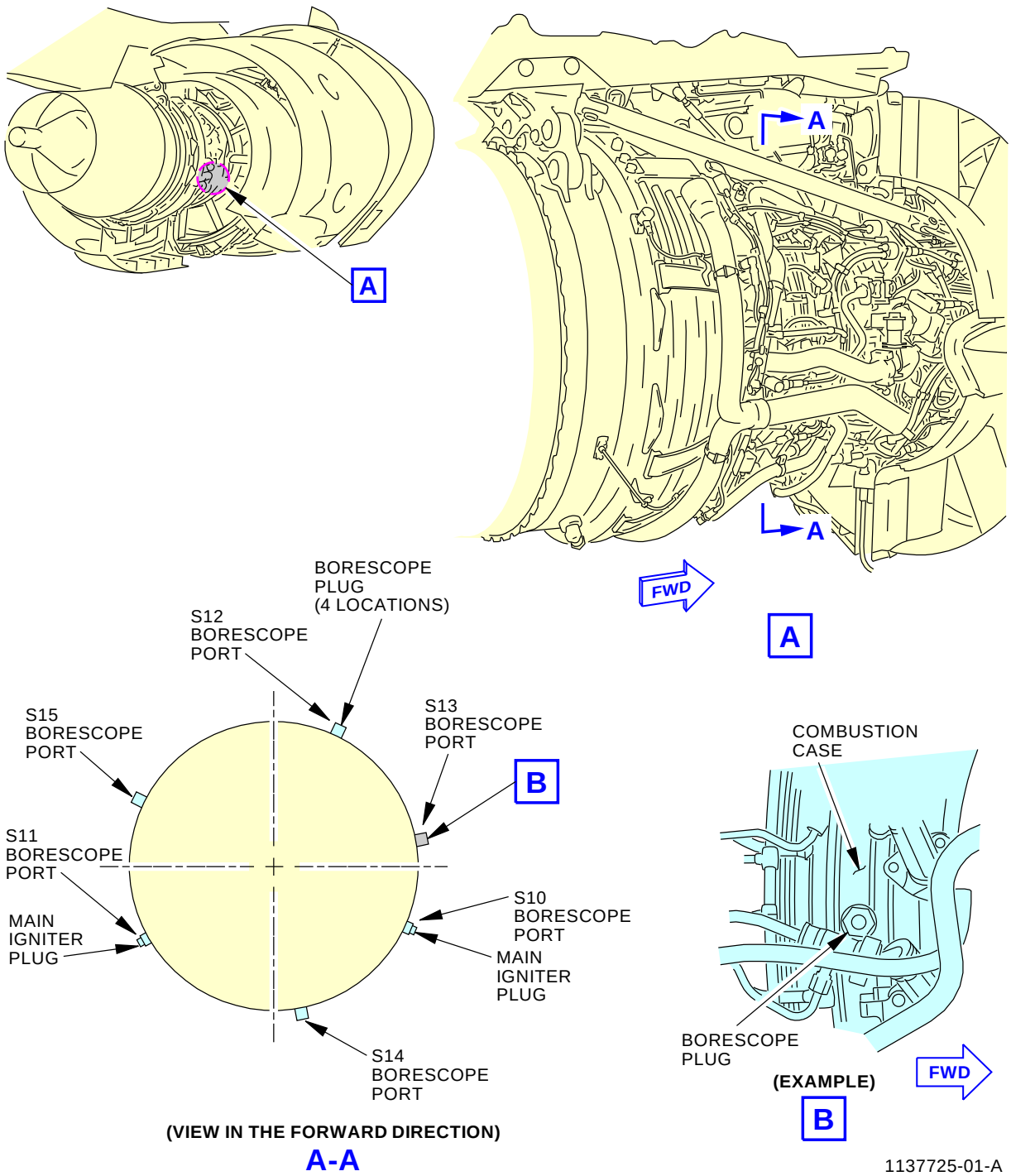

Combustion Chamber Borescope Port Locations
Figure 3

BOEING PROPRIETARY - Copyright © Unpublished Work - See title page for details

DATE	TAIL NUMBER	STATION	AIRLINE CARD NO.	BOEING CARD NO.
				72-180-01-01

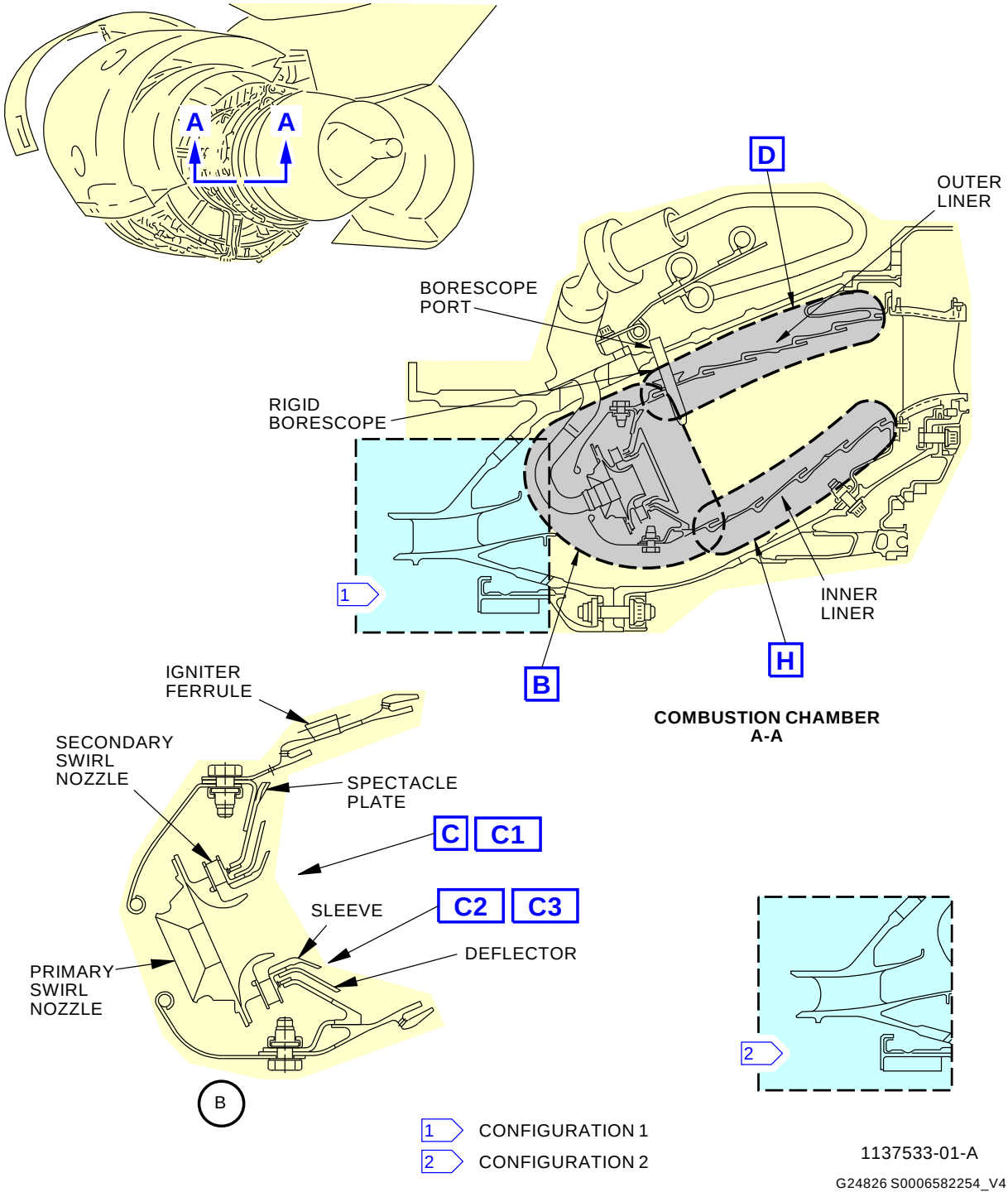

Combustion Section Borescope Inspection
Figure 4 (Sheet 1 of 9)

BOEING PROPRIETARY - Copyright © Unpublished Work - See title page for details

DATE	TAIL NUMBER	STATION	AIRLINE CARD NO.	BOEING CARD NO.
				72-180-01-01

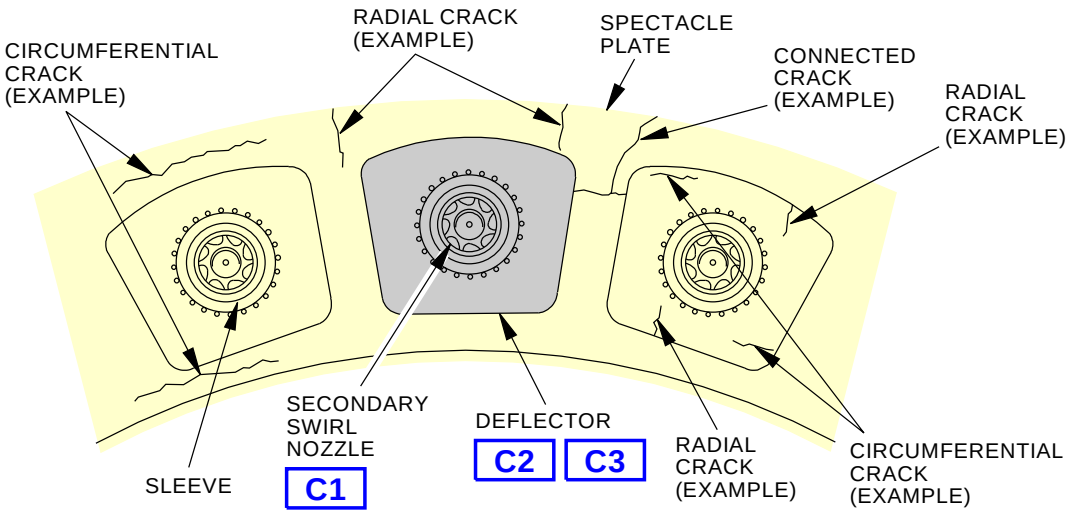

DOME AREA CRACK DAMAGE (EXAMPLE)

C

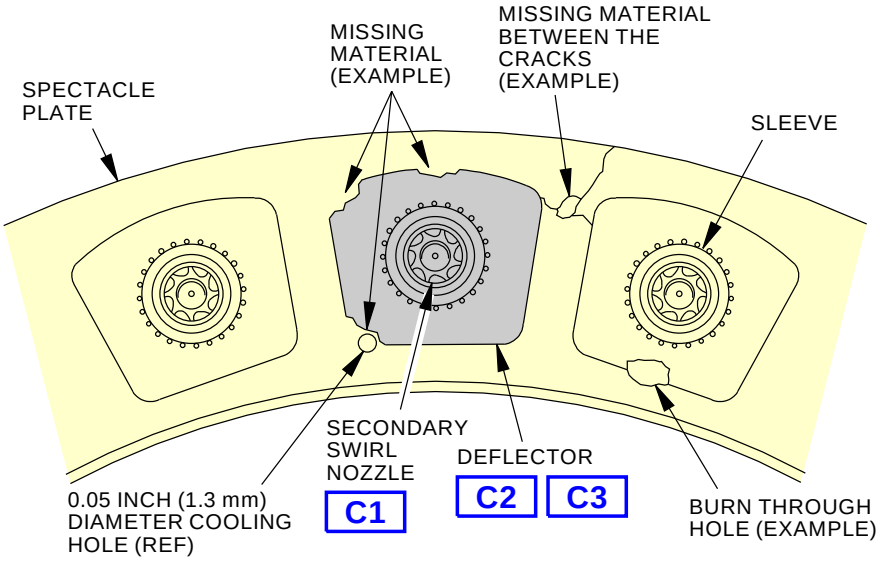

DOME AREA MISSING MATERIAL DAMAGE (EXAMPLE)

C

1137534-02-A

G24887 S0006582255_V5

Combustion Section Borescope Inspection
Figure 4 (Sheet 2 of 9)

BOEING PROPRIETARY - Copyright © Unpublished Work - See title page for details

DATE	TAIL NUMBER	STATION	AIRLINE CARD NO.	BOEING CARD NO.
				72-180-01-01

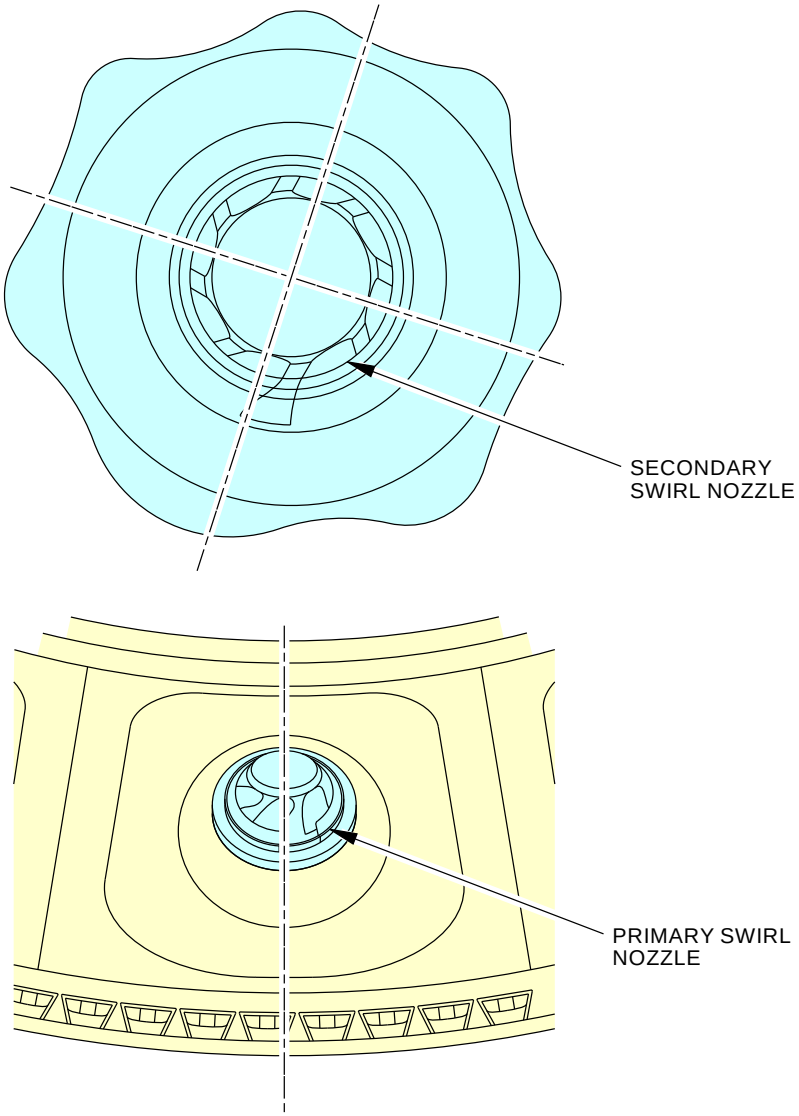

C1

5007925-00

2397102 S0000553802_V1

Combustion Section Borescope Inspection
Figure 4 (Sheet 3 of 9)

BOEING PROPRIETARY - Copyright © Unpublished Work - See title page for details

DATE	TAIL NUMBER	STATION	AIRLINE CARD NO.	BOEING CARD NO.
				72-180-01-01

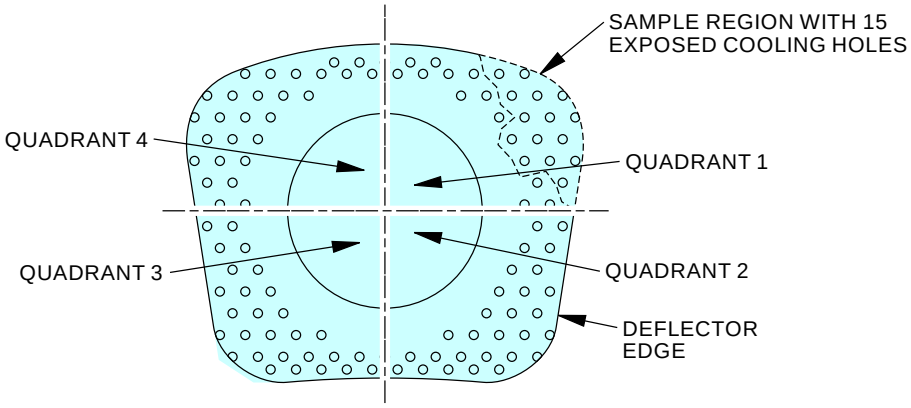

DOME IN QUADRANT DEFINITION
(AFT LOOKING FORWARD)

C2

SAMPLE EXPOSED COOLING HOLES

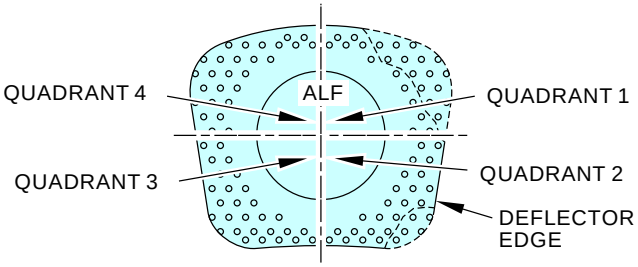

OR

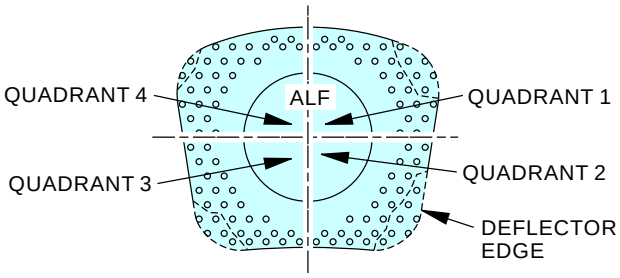

C3

5007927-00

2088288 S0000440608_V3

Combustion Section Borescope Inspection
Figure 4 (Sheet 4 of 9)

BOEING PROPRIETARY - Copyright © Unpublished Work - See title page for details

DATE	TAIL NUMBER	STATION	AIRLINE CARD NO.	BOEING CARD NO.
				72-180-01-01

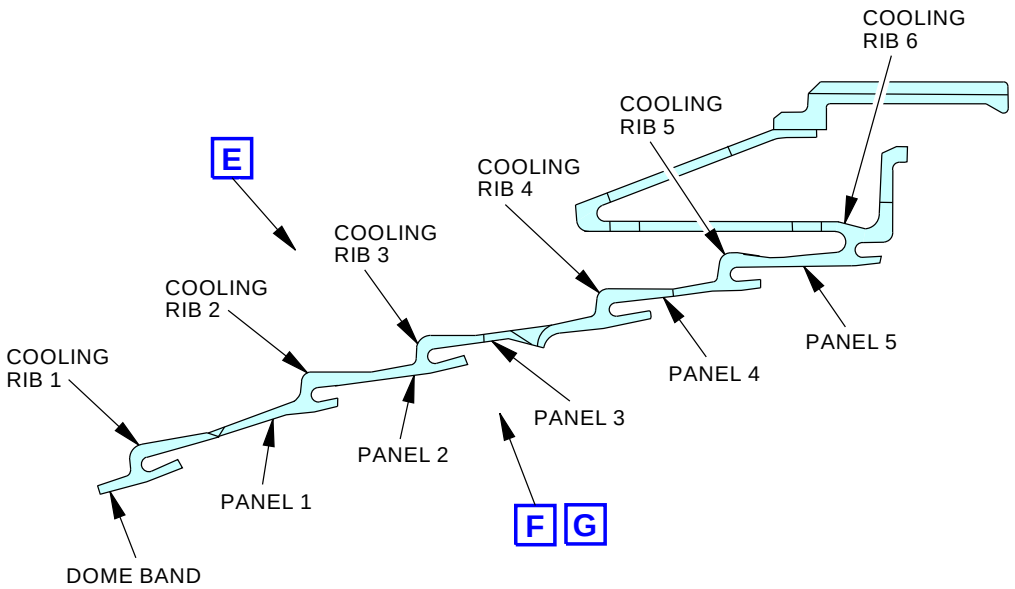

OUTER LINER

D

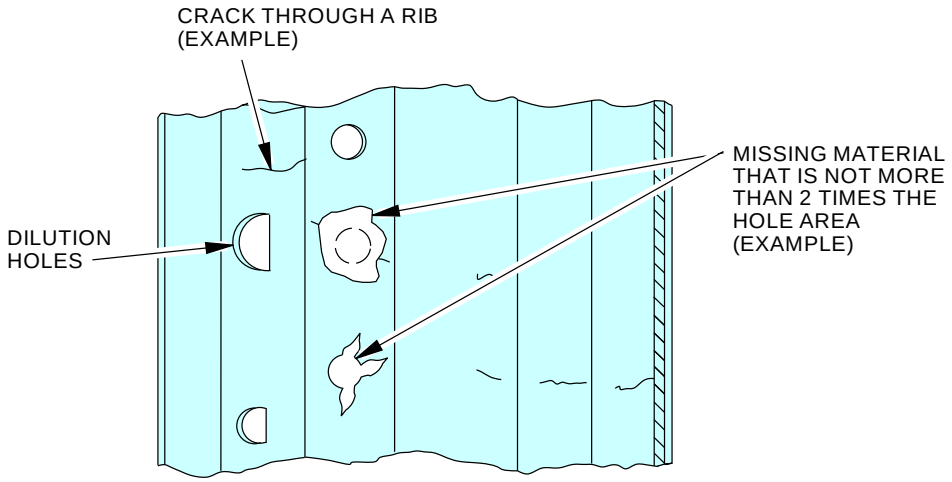

OUTER LINER CRACKS AND MISSING MATERIAL DAMAGE (EXAMPLE)

E

1250655-00

1307448 S0000226565_V2

Combustion Section Borescope Inspection
Figure 4 (Sheet 5 of 9)

BOEING PROPRIETARY - Copyright © Unpublished Work - See title page for details

DATE	TAIL NUMBER	STATION	AIRLINE CARD NO.	BOEING CARD NO.
				72-180-01-01

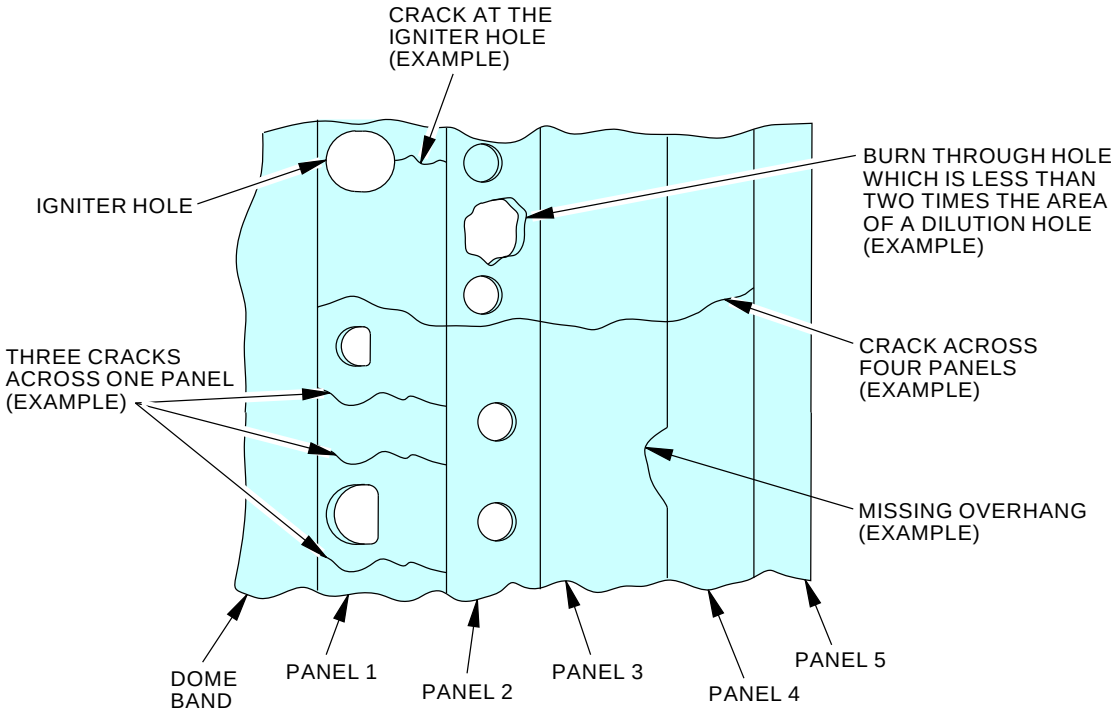

OUTER LINER CRACKS AND MISSING MATERIAL DAMAGE

F

1250656-00

1307795 S0000226567_V2

Combustion Section Borescope Inspection
Figure 4 (Sheet 6 of 9)

BOEING PROPRIETARY - Copyright © Unpublished Work - See title page for details

DATE	TAIL NUMBER	STATION	AIRLINE CARD NO.	BOEING CARD NO.
				72-180-01-01

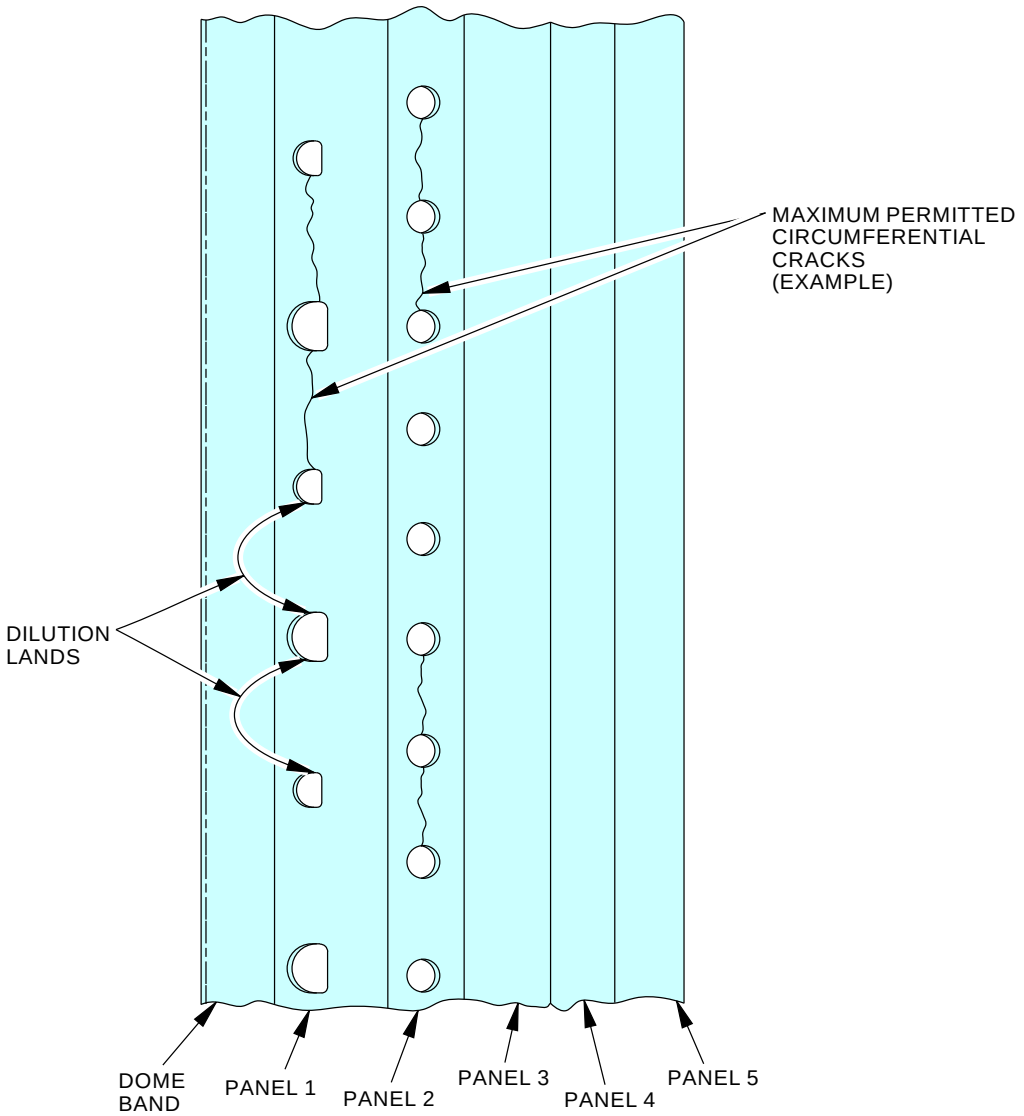

OUTER LINER CIRCUMFERENTIAL CRACK DAMAGE

G

1250657-00

1307838 S0000226568_V2

Combustion Section Borescope Inspection
Figure 4 (Sheet 7 of 9)

BOEING PROPRIETARY - Copyright © Unpublished Work - See title page for details

DATE	TAIL NUMBER	STATION	AIRLINE CARD NO.	BOEING CARD NO.
				72-180-01-01

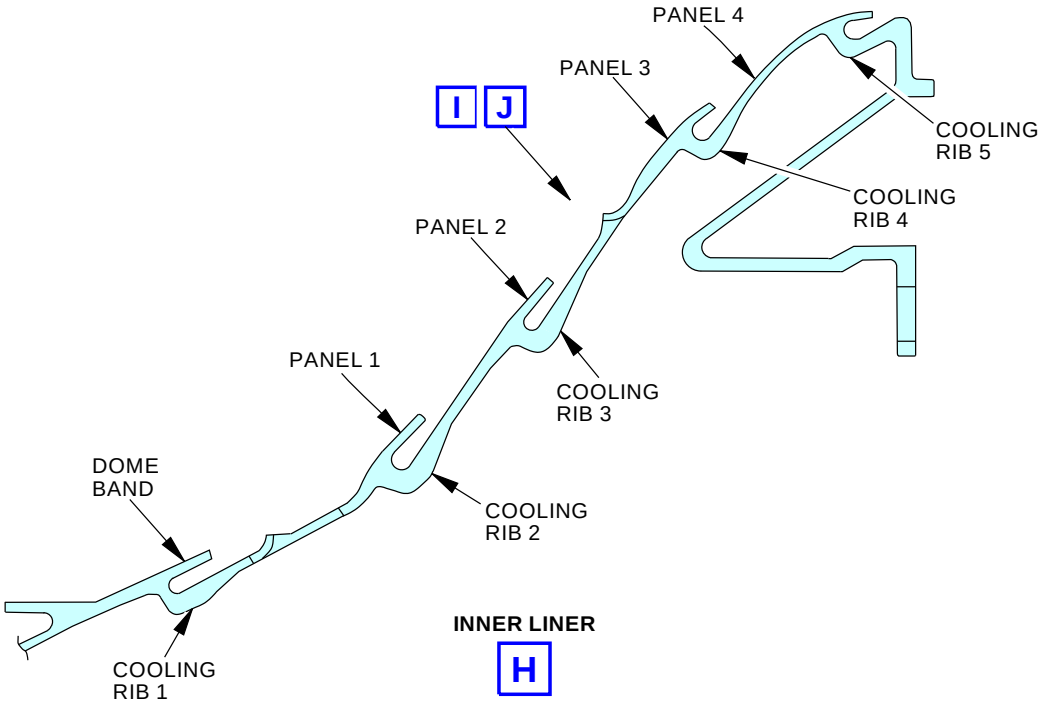

INNER LINER

H

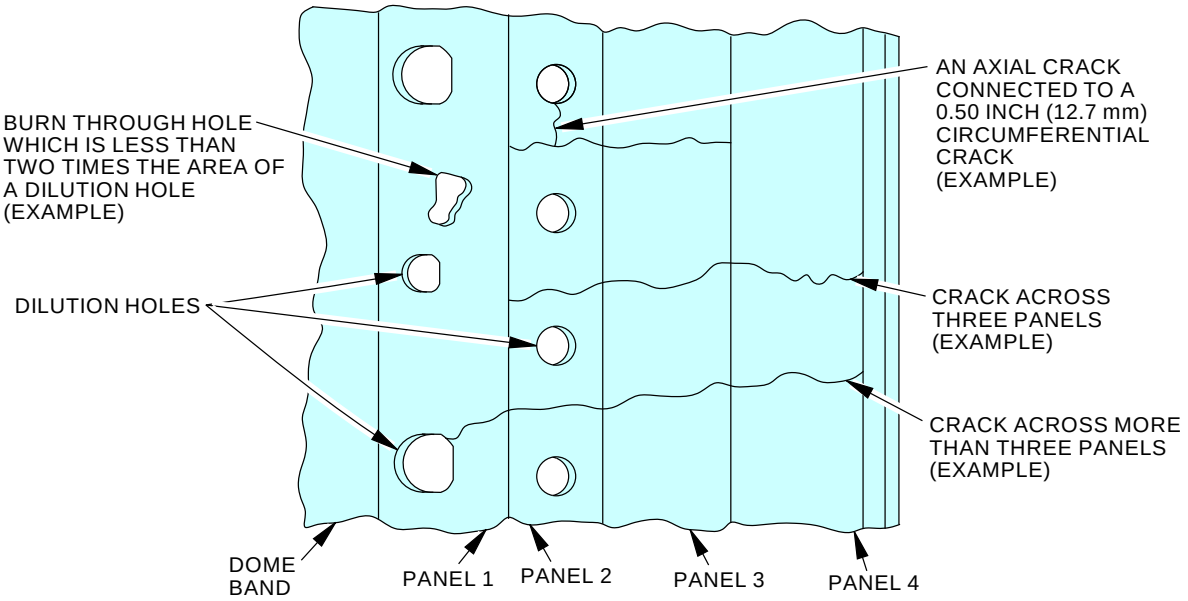

INNER LINER FOR CRACKS AND BURN THROUGH

I

1250658-00
1307932 S0000226569_V2

Combustion Section Borescope Inspection
Figure 4 (Sheet 8 of 9)

BOEING PROPRIETARY - Copyright © Unpublished Work - See title page for details

DATE	TAIL NUMBER	STATION	AIRLINE CARD NO.	BOEING CARD NO.
				72-180-01-01

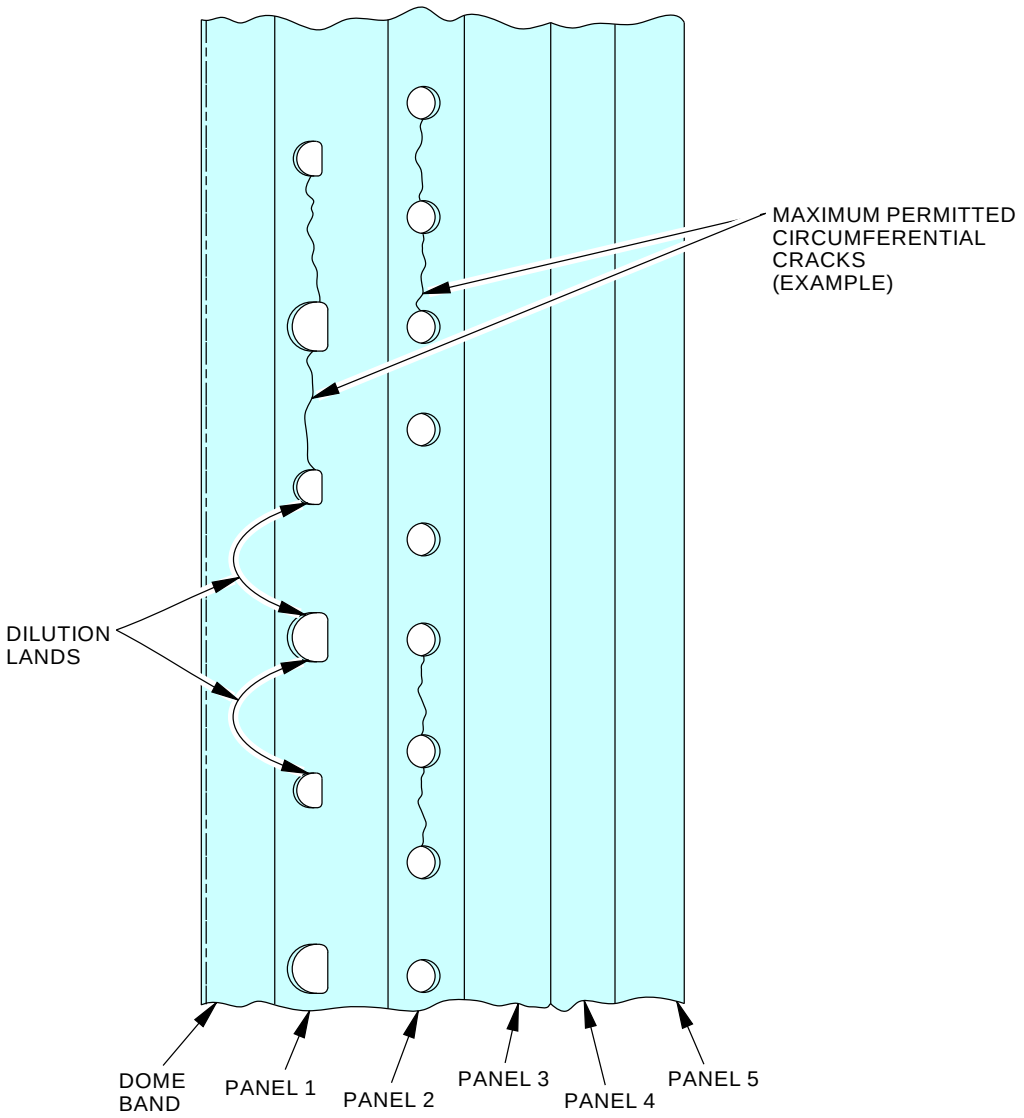

INNER LINER FOR CRACKS AND BURN THROUGH

J

1250659-00

1307933 S0000226570_V2

Combustion Section Borescope Inspection
Figure 4 (Sheet 9 of 9)

BOEING PROPRIETARY - Copyright © Unpublished Work - See title page for details

DATE	TAIL NUMBER	STATION	AIRLINE CARD NO.	BOEING CARD NO.
				72-180-01-01

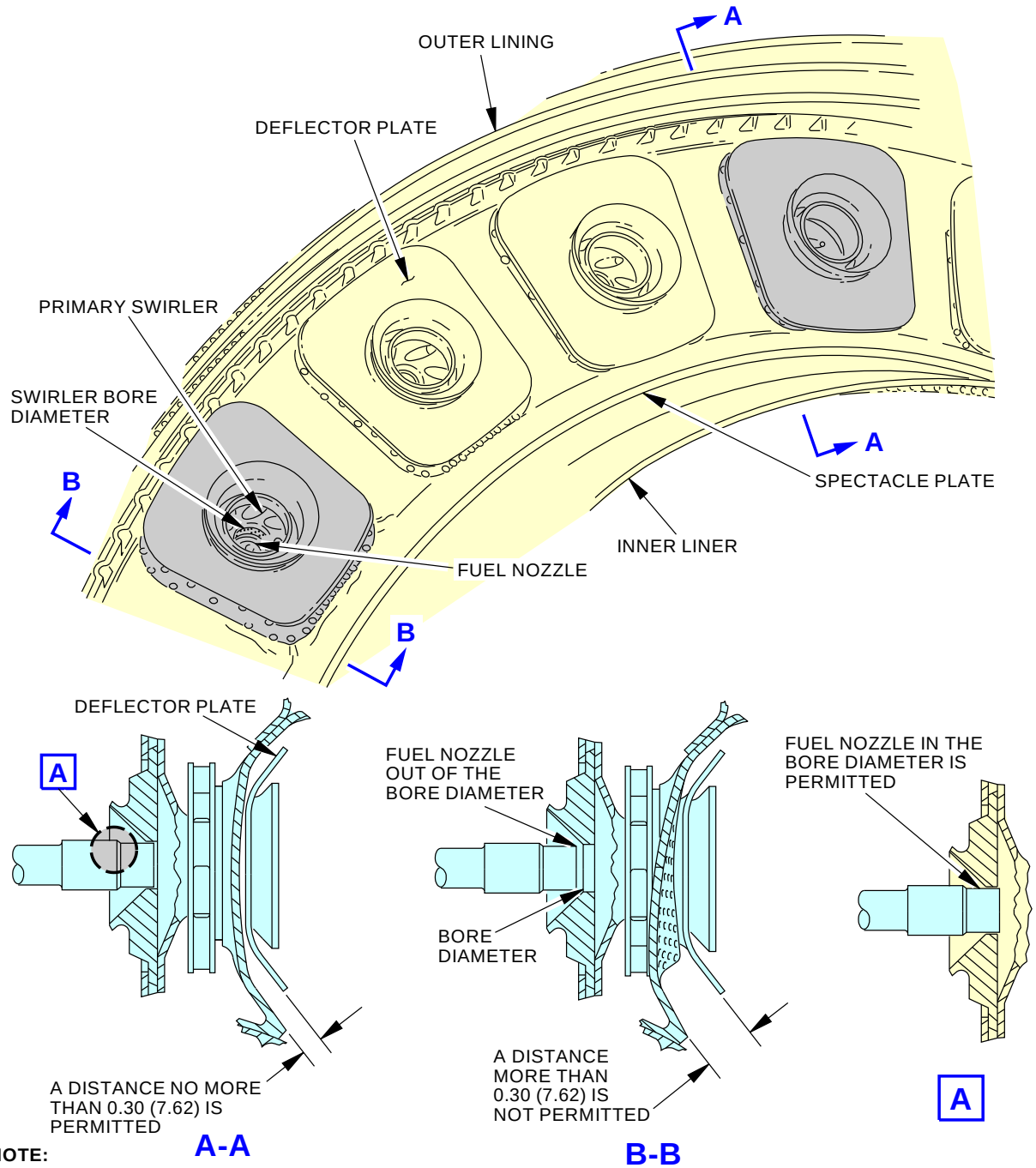

NOTE:

ALL DIMENSIONS ARE IN INCHES WITH MILLIMETERS IN PARENTHESES.

GMM-1096836-00-B
L35434 S0006582261_V2

After Bird Strike Combustion Section Borescope Inspection
Figure 5

BOEING PROPRIETARY - Copyright © Unpublished Work - See title page for details

AIRLINE CARD NO		TITLE **RIGHT ENGINE COMBUSTION CHAMBER**			BOEING CARD NO. **72-180-02-01**
DATE	TASK **INSPECTION - DETAILED**				RELATED CARD
TAIL NUMBER	WORK AREA **RIGHT ENGINE**	VERSION **1.1** **1.2**	THRESHOLD **6600 FC** **15000 FH**	REPEAT **1600 FC** **4000 FH**	APPLICABILITY AIRPLANE **ALL** ENGINE **ALL NOTE**
STATION	SKILL **ENGIN**				
		ACCESS **423 424 425 426**			ZONE **421**

Borescope inspection of the right engine combustion chamber.

ENGINE NOTE: Task is for Single Annular Combustor engines.

A. References

Reference	Title
AMM 70-10-03-910-801-F00	Temporary Marking Procedures (P/B 201)
AMM 71-00-02-000-801-F00	Power Plant Removal (P/B 401)
AMM 71-00-02-400-801-F00	Power Plant Installation (P/B 401)
AMM 71-11-02-010-801-F00	Open the Fan Cowl Panels (P/B 201)
AMM 71-11-02-410-801-F00	Close the Fan Cowl Panels (P/B 201)
AMM 72-00-00-980-802-F00	Find the Zero Index Mark on the N2 Rotor (P/B 201)
AMM 72-63-01-400-801-F00	Handcranking Drive Cover Installation (P/B 201)
AMM 73-11-04-000-804-F02	Fuel Nozzle Removal (P/B 401)
AMM 73-11-04-000-805-F01	Fuel Nozzle Removal (P/B 401)
AMM 73-11-04-400-804-F02	Fuel Nozzle Installation (P/B 401)
AMM 73-11-04-400-805-F01	Fuel Nozzle Installation (P/B 401)
AMM 74-21-02-000-801-F00	Main Igniter Plug Removal (P/B 401)
AMM 74-21-02-400-801-F00	Main Igniter Plug Installation (P/B 401)
AMM 78-31-00-010-801-F00	Open the Thrust Reverser (Selection) (P/B 201)
AMM 78-31-00-010-804-F00	Close the Thrust Reverser (Selection) (P/B 201)
AMM 78-31-00-040-802-F00	Thrust Reverser Deactivation For Ground Maintenance (P/B 201)
AMM 78-31-00-440-803-F00	Thrust Reverser Activation After Ground Maintenance (P/B 201)
FIM 71-05 TASK 801	Birdstrike/FOD in Engine - Fault Isolation

B. Consumable Materials

Reference	Description	Specification
D00601 [CP2101]	High-temperature graphite compound	SAE AMS 2518
D50032 [CP1064]	Compound - Antiseize - Milk of Magnesia	
D50034 [CP2619]	Compound - Antiseize - Pure Nickel Special, Never - Seez	CFM CP2619
G01043	Cloth - Lint-free	

BOEING PROPRIETARY - Copyright © Unpublished Work - See title page for details

(Continued)

Reference	Description	Specification
G02345 [CP8001]	Wire - Safety, 0.032 Inch (0.8 mm) Diameter	CFM CP8001, AMS 5687
G02481 [CP2801]	Marker - Temporary	
G50065 [CP8006]	Cable, Safety, Stainless Steel, 0.032 inch (0.813 mm) Diameter	M50 TF 9 CL-A

C. Tools/Equipment

NOTE: When more than one tool part number is listed under the same "Reference" number, the tools shown are alternates to each other within the same airplane series. Tool part numbers that are replaced or non-procurable are preceded by "Opt:", which stands for Optional.

Reference	Description
COM-2195	Set - Borescope Rigid, Olympus Part #: 856A1320P04 Supplier: 58828
COM-2196	Set - Borescope Fiber, 6 mm diameter Part #: 856A1321P05 Supplier: 58828 Part #: 856A1321P06 Supplier: 58828 Opt Part #: 856A1321P03 Supplier: 58828
COM-4302	Set - Borescope Rigid, Wolf Part #: 856A1320P05 Supplier: 58828
COM-4303	Set - Borescope Rigid, Lenox Part #: 856A1320P06 Supplier: 58828
COM-4304	Set - Borescope Rigid, ITI USA Part #: 856A1320P07 Supplier: 58828
SPL-2197	Light Source - Borescope, Lenox (150W) Part #: 856A1322P02 Supplier: 58828
SPL-2198	Kit - Borescope Guide, HP Turbine, CFM56 Engines Part #: 856A1310G01 Supplier: 58828
SPL-2207	Guide Tube - Borescope, HPT Shroud, CFM56 Engines Part #: 856A1351P01 Supplier: 58828
SPL-4305	Light Source - Borescope, Olympus (150W) Part #: 856A1322P03 Supplier: 58828
SPL-4306	Light Source - Borescope, Wolf (300W) Part #: 856A1322P04 Supplier: 58828
SPL-4307	Light Source - Borescope, Machida Part #: 856A1322P07 Supplier: 58828
SPL-4308	Light Source - Borescope, ITI USA (150W) Part #: 856A1322P08 Supplier: 58828
STD-10711	Shop Vacuum (400Hz if using aircraft power)
STD-585	Mat - Protective, 3/8 Inch (9.5 mm) Minimum Thickness, Minimum 42x60 Inches (1x1.5 meters) with Warning Streamers

BOEING PROPRIETARY - Copyright © Unpublished Work - See title page for details

MECH	INSP

TASK 72-00-00-200-802-F00

1. Borescope Inspection Preparation

(Figure 1 and Figure 2)

A. General

(1) This task provides the instructions on how to prepare for the borescope inspection.

B. Borescope Inspection Preparation

SUBTASK 72-00-00-860-001-F00

(1) For the applicable engine, install a DO-NOT-OPERATE tag on the start lever.

SUBTASK 72-00-00-860-080-F00

(2) For Engine 1, open this circuit breaker and install a safety tag:

CAPT Electrical System Panel, P18-2

Row	Col	Number	Name
B	8	C01103	ENGINE 1 START VALVE

SUBTASK 72-00-00-860-081-F00

(3) For Engine 2, open this circuit breaker and install a safety tag:

F/O Electrical System Panel, P6-2

Row	Col	Number	Name
C	4	C00154	ENGINE 2 START VALVE

SUBTASK 72-00-00-860-082-F00

(4) Do these tasks in sequence to safely open the left and right thrust reversers on the applicable engine:

WARNING: DO THE DEACTIVATION PROCEDURE FOR THE THRUST REVERSER TO PREVENT THE OPERATION OF THE THRUST REVERSER. ACCIDENTAL OPERATION OF THE THRUST REVERSER CAN CAUSE INJURIES TO PERSONS OR DAMAGE TO EQUIPMENT.

(a) Do this task: Thrust Reverser Deactivation for Ground Maintenance, AMM TASK 78-31-00-040-802-F00.

(b) Open the left and right fan cowl panels (AMM TASK 71-11-02-010-801-F00).

WARNING: OBEY THE INSTRUCTIONS IN THE PROCEDURE TO OPEN THE THRUST REVERSERS. IF YOU DO NOT OBEY THE INSTRUCTIONS, INJURIES TO PERSONS AND DAMAGE TO EQUIPMENT CAN OCCUR.

(c) Open the left and right thrust reversers (AMM TASK 78-31-00-010-801-F00).

BOEING PROPRIETARY - Copyright © Unpublished Work - See title page for details

MECH	INSP

SUBTASK 72-00-00-480-001-F00

(5) Refer to the applicable steps and borescope equipment to prepare for the inspection:

NOTE: For this procedure, borescope equipment is used for all inspections but not for the axial preload check of the Stage 4 LPT blades.

NOTE: Refer to the CFM Illustrated Tool and Equipment manual for the current part number for all the borescope equipment.

NOTE: Alternative borescope equipment that is as good or better than the CFM Borescope Specification is permitted for use. Refer to the CFM Non-Destructive Test Manual (CFM-TP-NT.11), Borescope Inspection, Part 7, for requirements.

CAUTION: MAKE SURE THAT THE POWER SWITCH IS IN THE OFF POSITION AND THE LIGHT INTENSITY CONTROL IS SET AT MINIMUM BEFORE YOU CONNECT THE LIGHT SOURCE TO THE POWER SUPPLY. MAKE SURE THE LIGHT SOURCE AND THE POWER SUPPLY ARE CORRECTLY ATTACHED TO A GROUND. DAMAGE TO THE EQUIPMENT CAN OCCUR.

(a) Connect the applicable light source to a power source that is grounded.

(b) You will use these borescope tools to do a complete borescope inspection of the engine:

NOTE: For more data on the use of this borescope equipment, refer to CFM NDTM 72-00-00, Part 7.

It is not recommended to do a borescope inspection at temperatures more than 150 degrees F (65.6 degrees C). You can do a dry motor to increase the engine cool down rate.

1) The applicable borescope and light source
   a) Rigid Borescope, COM-2195 and light source, SPL-4305
   b) Rigid Borescope, COM-4302 and light source, SPL-4306
   c) Rigid Borescope, COM-4303 and light source, SPL-2197
   d) Rigid Borescope, COM-4304 and light source, SPL-4308
   e) alternative light source, SPL-4307
2) The monitor, MSE-64
3) The fiber borescope, COM-2196 to do the inspection of these areas:
   a) The combustion chamber
   b) The HPT nozzle guide vanes
   c) The HPT blades.
4) The borescope guide kit, SPL-2198 and the borescope guide tube, SPL-2207 to do the inspection of these areas:
   a) The HPT nozzle guide vanes
   b) The HPT blades.

BOEING PROPRIETARY - Copyright © Unpublished Work - See title page for details

DATE	TAIL NUMBER	STATION	AIRLINE CARD NO.	BOEING CARD NO.
				72-180-02-01

MECH	INSP

SUBTASK 72-00-00-210-001-F00

(6) If it is necessary to index the N2 rotor, do this task: Find the Zero Index Mark on the N2 Rotor, AMM TASK 72-00-00-980-802-F00.

NOTE: It is recommended that you stop the N2 rotor when you put each blade in position for inspection. This will permit you to do a full inspection of each blade.

SUBTASK 72-00-00-210-002-F00

(7) If it is necessary to turn or index the N1 rotor, do these steps:

(a) Put a protective mat, STD-585 in the inlet cowl.

(b) Find the number one fan blade.

NOTE: The fan blade 1 is adjacent to a machined dimple in the aft area of the rear spinner cone.

(c) Use a marker, G02481 [CP2801] to make a mark to identify the number one fan blade (AMM TASK 70-10-03-910-801-F00).

(d) Align the leading edge of the number one fan blade with the T12 temperature sensor.

NOTE: The T12 temperature sensor is approximately at the 10:30 o'clock position as you look in the inlet cowl.

SUBTASK 72-00-00-210-129-F00

(8) Do a general visual inspection of the primary plug assembly for oil puddling.

NOTE: An oil puddle in the exhaust system can occur after the engine is dry or wet motored (refer to task 71–71–00–200–801–F00).

SUBTASK 72-00-00-100-016-F00

(9) If oil puddling is found, remove the oil from the primary plug:

(a) Clean oil from the surface with a lint-free cloth, G01043. A vacuum, STD-10711 can be used to remove unwanted oil.

——— END OF TASK ———

BOEING PROPRIETARY - Copyright © Unpublished Work - See title page for details

TASK 72-00-00-200-805-F00

MECH	INSP

2. Combustion Section Borescope Inspection

(Figure 1, Figure 3, Figure 4, Figure 4 and Figure 5)

A. General

(1) This task provides the instructions on how to examine the combustion section with a borescope.

B. Prepare for the Inspection

SUBTASK 72-00-00-210-024-F00

(1) Do this task: Borescope Inspection Preparation, TASK 72-00-00-200-802-F00.

SUBTASK 72-00-00-010-004-F00

(2) Remove the S13 and S15 borescope plugs:

NOTE: To do an initial inspection, it is only necessary to remove the S13 and S15 borescope plugs. If you find damage, you must remove the main igniter plugs and the other borescope plugs to do a complete inspection.

SUBTASK 72-00-00-010-005-F00

(3) If it is necessary to do a complete inspection, do these steps to remove the main igniter plugs and the other borescope plugs:

NOTE: The port for the 4:00 o'clock main igniter plug is referred to as the S10 borescope port. The port for the 8:00 o'clock main igniter plug is referred to as the S11 borescope port.

(a) Do this task: Main Igniter Plug Removal, AMM TASK 74-21-02-000-801-F00.

(b) Remove the S12 and S14 borescope plugs.

SUBTASK 72-00-00-210-027-F00

(4) Do these steps to prepare for the inspection of the combustion section:

(a) Connect the applicable rigid borescope to the light source.

1) Connect Rigid Borescope, COM-2195 and light source, SPL-4305.

2) Connect Rigid Borescope, COM-4302 and light source, SPL-4306.

3) Connect Rigid Borescope, COM-4303 and light source, SPL-2197.

4) Connect Rigid Borescope, COM-4304 and light source, SPL-4308.

5) Use the rigid borescope with the yellow band to get a general view of the combustion chamber.

6) Use the rigid borescope with the green band as follows:

a) Use the borescope to view circumferentially around the combustion chamber.

b) Use the borescope to view the inner liner that is adjacent to the borescope port.

7) Use the rigid borescope with the blue band to view the outer liner that is adjacent the borescope port.

8) Use the rigid borescope with the black band to view the aft ends of the inner and outer liners.

BOEING PROPRIETARY - Copyright © Unpublished Work - See title page for details

9) Use the rigid borescope with the black band to evaluate defects that you found with the other borescopes.

10) Use the fiberscope to view the outside of the outer liner.

(b) Make sure that you adjust the borescope correctly.

(c) Turn the lightsource ON.

SUBTASK 72-00-00-210-028-F00

(5) If it is necessary to do an inspection of the cold-side of the outer liner, do these steps to prepare for the inspection:

(a) Connect the borescope, COM-2196, to the applicable light source.

(b) Make sure that you adjust the borescope correctly.

(c) Turn the light source ON.

C. Combustion Section Borescope Inspection

SUBTASK 72-00-00-210-118-F00

(1) Examine all surfaces as follow:

(a) Discoloration

1) Permitted.

(b) Carbon accumulation

1) Permitted.

(c) Missing, chipped or spalled areas of the thermal barrier coating

1) Permitted.

SUBTASK 72-00-00-210-029-F00

(2) Examine the dome assembly as follows:

(a) Distortion of the deflector or the sleeve

1) Permitted.

(b) Radial cracks in the spectacle plate.

1) Permitted with these conditions:

a) The cracks are not connected.

b) The cracks are less than 2.0 inches (50.8 mm) in length.

2) A continue-in-service limit of 25 flight hours is permitted with these conditions:

a) The cracks are not connected.

b) The cracks are less than 2.5 inches (63.5 mm) in length.

(c) Circumferential cracks in the spectacle plate

1) Permitted with these conditions:

a) The cracks are less than 3.0 inches (76 mm) in length.

b) The minimum distance between cracks is not less than 6.0 inches (152 mm).

2) A continue-in-service limit of 25 flight hours, is permitted with these conditions:

a) The cracks are less than 3.6 inches (91 mm) in length.

BOEING PROPRIETARY - Copyright © Unpublished Work - See title page for details

DATE	TAIL NUMBER	STATION	AIRLINE CARD NO.	BOEING CARD NO. 72-180-02-01

MECH	INSP

b) The minimum distance between cracks is not less than 4.8 inches (125 mm).

(d) Cracks in the spectacle plate that are connected

1) One radial crack can be connected to one circumferential crack that extends between adjacent deflectors with these conditions:

a) The radial crack is less than 2.0 inches (50.8 mm) in length.

b) The circumferential crack is less than 3.0 inches (76 mm) in length.

c) The minimum distance between cracks is not less than 6.0 inches (152 mm).

2) A continue-in-service limit of 25 flight hours is permitted with these conditions:

a) The radial crack is not more than 2.5 inches (63.5 mm) in length.

b) The circumferential crack is not more than 3.6 inches (91 mm) in length.

c) The minimum distance between cracks is not less than 4.8 inches (125 mm).

(e) Missing material from the spectacle plate

1) A maximum area of 0.060 x 0.060 inch (1.52 x 1.52 mm) is permitted at the point where the cracks connect.

2) A continue-in-service limit of 25 flight hours is permitted if the damage is more than the limits.

(f) Radial cracks in the deflector or the sleeve

1) Permitted, if they are less than 0.5 inch (13 mm) in length.

2) A continue-in-service limit of 25 cycles is permitted if the cracks are not more than 0.6 inch (16 mm) in length.

(g) Circumferential cracks in the deflector or sleeve

1) There is no limit to the number of cracks if they are less than 0.75 inch (19 mm) in length.

2) A continue-in-service limit of 25 cycles is permitted if the cracks are not more than 0.9 inch (23 mm) in length.

(h) Cracks that connect in the deflector or sleeve

1) One radial and one circumferential crack that connect are permitted, with these conditions:

a) The radial crack is less than 0.5 inch (13 mm) in length.

b) The circumferential crack is less than 0.75 inch (19 mm) in length.

2) A continue-in-service limit of 25 cycles is permitted with these conditions:

a) The radial crack is not more than 0.6 inch (16 mm) in length.

b) The circumferential crack is not more than 0.9 (23 mm) in length.

(i) Missing material from the extensions on the deflector

NOTE: Examine the deflector surface as close to perpendicular as possible.

BOEING PROPRIETARY - Copyright © Unpublished Work - See title page for details

MECH	INSP

1) Up to 15-exposed dome cooling holes permitted in each deflector quadrant (Figure 4, View C2).
2) Not more than 20-exposed dome cooling holes in any deflector (Figure 4, View C3).
3) Do this inspection again after 750 cycles if up to 25 dome cooling holes total in any deflector are exposed.
4) More than 25-exposed dome cooling holes total in any deflector, the continue-in-service limit is 25 cycles.

(j) Missing material from the extensions on the sleeve
1) Permitted if the depth is not more than 0.20 inch (5.08 mm).
2) A continue-in-service limit of 50 cycles is permitted if the depth is not more than 0.240 inch (6.10 mm).

(k) Burn holes
1) 3 areas for each dome are permitted if the maximum area of each hole is not more than 1.0 x 1.0 inch (25 x 25 mm).
2) A continue-in-service limit of 25 cycles is permitted with these conditions:
a) There are not more than 3 areas on each dome that have missing material.
b) Each area is not more than 1.2 x 1.2 inch (30 x 30 mm).

(l) Cracks in the primary swirl nozzle
1) Permitted.

(m) Cracks and missing material from the secondary swirl nozzle venturi.
1) Any number of indications (cracks) permitted.
2) Any number with missing material less than 0.10 inch (2.5 mm) in width permitted(Figure 4 , View C1) .
3) Up to six locations up to 0.30 inch (7.6 mm) total width of missing material permitted.
4) Do this inspection again after 750 cycles if; up to ten locations with 0.30 inch (7.6 mm) total width of missing material.
5) If the width exceeds 0.30 inch (7.6 mm) or more than ten locations over 0.10 inch (2.5 mm) , the Continue-In-Service limit is 25 cycles.

SUBTASK 72-00-00-210-030-F00

(3) Examine the inner and outer liners as follow:

(a) Axial cracks on the outer liner

NOTE: The dome band is counted as a panel.

NOTE: Axial cracks that become circumferential cracks for a length that is less than one dilution land, should be counted as one continuous axial crack.

1) Cracks that go across only one panel are permitted.
2) A maximum of 4 cracks that go across more than one panel are permitted with this condition

BOEING PROPRIETARY - Copyright © Unpublished Work - See title page for details

DATE	TAIL NUMBER	STATION	AIRLINE CARD NO.	BOEING CARD NO. 72-180-02-01

MECH	INSP

a) The cracks cannot go across more than 3 panels.

3) If a crack is longer than 3 panels, do the borescope inspection of the cold side of the outer liner.

NOTE: Do the inspection of the cold side only if you have no more than 3 cracks that are longer than 3 panels. More than 3 cracks that are longer than 3 panels are not permitted.

4) A continue-in-service limit of 100 cycles is permitted with these conditions:

a) There are not more than 5 cracks that go across more than one panel.

b) A crack cannot go across more than 5 panels in sequence.

(b) The cold side of the outer liner for cracks.

NOTE: Do this inspection of the cold side only if you find not more than 3 cracks that are longer than 3 panels during the hot side inspection. More than 3 cracks that are longer than 3 panels is not permitted.

1) The cracks must not go through more than one of the last three cooling ribs (cooling ribs 4, 5, or 6).

2) Cooling rib 1 must not be cracked through.

3) Do this inspection again after 750 cycles.

4) A continue-in-service limit of 25 cycles is permitted with these conditions:

a) There are no more than 5 cracks that go across more than one panel.

b) There are no cracks that go across more than 5 panels.

c) At least one of the cooling ribs (3, 4, 5, or 6) do not have cracks that go through to the cold side.

d) Cooling rib 1 does not have a crack that goes through.

(c) Axial cracks on the inner liner

1) Permitted if the cracks do not go across more than one panel.

2) There are not more than 4 cracks that go across more than one panel.

3) Only one crack can go across more than three panels with these conditions:

a) The crack does not go across more than 4 panels.

b) The crack is connected to a hole caused by burn-through or missing material which is not more than 3 times the size of a dilution hole.

c) The crack is not connected to a circumferential crack that is more than 0.50 inch (12.7 mm) in length.

d) Do this inspection again after each 750 cycles.

4) A continue-in-service limit of 100 cycles is permitted with these conditions:

a) There are not more than 5 cracks that go across more than one panel.

b) There are no cracks that go across more than 4 panels in sequence.

BOEING PROPRIETARY - Copyright © Unpublished Work - See title page for details

DATE	TAIL NUMBER	STATION	AIRLINE CARD NO.	BOEING CARD NO.
				72-180-02-01

MECH	INSP

(d) Circumferential cracks on the inner and outer liners

NOTE: Use the length of the dilution lands to help you find the length of the cracks.

NOTE: For the dome bands and panel 2 of the inner and outer liner, use the dilution lands (the distance between the edges of the dilution holes) on panel 1. For the panels 4 and 5 on the outer liner and panel 4 of the inner liner, use the dilution lands on panel 3.

1) Permitted with these conditions:
   a) The cracks are not longer than 2 dilution lands.
   b) There are no more than 2 adjacent cracks in a dilution land.
   c) The cracks are separated by a minimum of 3 dilution lands that do not have cracks.
2) A continue-in-service limit of 25 cycles is permitted with these conditions:
   a) The cracks are not longer than 3 dilution lands.
   b) The cracks are separated by a minimum of 3 dilution lands that do not have cracks.

(e) The inner and outer liners for axial and circumferential cracks that connect

1) One axial and one circumferential crack that connect are permitted, if the cracks are in the previous limits.
2) Multiple axial and circumferential cracks that connect are permitted, if:
   a) The cracks are contained in one panel.
   b) The cracks are contained in one dilution land area.
   c) There are not more than two locations in the adjacent panels that are axially aligned.
   d) The locations are separated by a minimum of 3 dilution lands that do not have cracks.
   e) There are not more than 5 locations with connected cracks.
3) A continue-In-service limit of 100 cycles is permitted with this condition:
   a) The cracks do not exceed their individual continue-in-service limits.

(f) Holes that are burned through

1) All quantities of holes total for the two liners are permitted with these conditions:
   a) There are not more than two holes in the adjacent panels that are axially aligned.
   b) The maximum size of all holes are not more than 5 times the size of a dilution hole.
   c) The total area of burn through does not to exceed 15 times the size of a dilution hole.

BOEING PROPRIETARY - Copyright © Unpublished Work - See title page for details

2) If the current condition exceeds the above limits but does not exceed the continue-in-service limit, repeat this borescope inspection of the holes that are burned through on the inner and outer liner every 250 cycles until the current condition exceeds the continue-in-service limit.

3) A continue-in-service limit of 100 cycles is permitted with these conditions:

a) There are more than three holes in the adjacent panels that are axially aligned.

b) The maximum size of all holes are not more than 6 times the size of the dilution hole.

c) The total area of burn through exceeds 24 times the size of a dilution hole.

(g) Missing overhangs on the inner and outer liners

1) 14 areas in each liner are permitted with these conditions:

a) Each area is not more than 2 times the size of the dilution hole.

b) They are not axially aligned across more than 3 adjacent panels.

2) A continue-in-service limit of 25 cycles is permitted with these conditions:

a) There are not more than 17 areas in each liner.

b) Each area is not more than 2 times the size of the dilution hole.

c) They are not axially aligned across more than 3 areas in adjacent panels.

(h) Distortion of the inner and outer liners

1) All distortions are permitted if each is not distorted more than 0.5 inch (12.7 mm) from the original contour.

2) A continue-in-service limit of 25 cycles is permitted if the distortion is not more than 0.7 inch (17 mm) from the original contour for each area.

SUBTASK 72-00-00-210-115-F00

(4) If there was a birdstrike/FOD, do these steps to examine the combustion chamber:

(a) Remove the borescope plugs from the combustor as follows:

1) Borescope plug S15 at 10:00 o'clock position

2) Borescope plug S12 at 1:00 o'clock position

3) Borescope plug S13 at 3:00 o'clock position

4) Borescope plug S14 at 6:00 o'clock position.

(b) Do a borescope or fiberscope inspection of the nozzle and swirlers as follows:

1) Put the borescope into one of the ports and turn on the light source for the borescope.

2) Look at the swirler and nozzle area in a clockwise and counter-clockwise direction.

NOTE: When you use a rigid borescope, you will only see one swirler and two deflectors in a clockwise or counter-clockwise direction.

3) Do the fuel nozzle tip inspection as follows:

BOEING PROPRIETARY - Copyright © Unpublished Work - See title page for details

MECH	INSP

a) The primary tips must be in the internal diameter of the primary swirler.

b) If the damaged fuel nozzle is not in the internal diameter of the primary swirler, replace the engine (AMM TASK 71-00-02-000-801-F00 and AMM TASK 71-00-02-400-801-F00).

4) Look at the opening between the forward edge of the deflector plate and the spectacle plate.

a) The clearance must be more than 0.080 inch (2.03 mm).

b) The clearance must not be more than 0.300 inch (7.62 mm).

c) If the opening is more than 0.300 inch (7.62 mm), examine the area around the nozzle and the outer side of the combustion chamber.

5) Do the inspection through the other ports.

6) If one or more of the above deflector plates are out of limits, and if you are sure the tip is in the correct position, do these steps:

a) Identify the fuel nozzle adjacent to the damaged area.

b) Remove the borescope.

c) Remove the adjacent fuel nozzle (AMM TASK 73-11-04-000-805-F01 or AMM TASK 73-11-04-000-804-F02).

d) Examine the fuel nozzle for damage.

e) If the fuel nozzle is in the internal diameter and does not touch the sides, continue to use the engine.

f) If the fuel nozzle is damaged, replace the fuel nozzle (AMM TASK 73-11-04-400-805-F01 or AMM TASK 73-11-04-400-804-F02)

(c) It is recommended (not mandatory) to do a one-time borescope inspection of the HPT nozzle leading edges at 400-800 cycles after the birdstrike event:

1) If no leading-edge distress is seen, go back to the usual borescope inspection interval.

2) If you can see missing material or burn through on the HPT nozzle leading-edge wall, contact CFMI and, do this task: Birdstrike/FOD in Engine - Fault Isolation, FIM 71-05 TASK 801.

SUBTASK 72-00-00-080-003-F00

(5) When the inspection is complete, remove the borescope equipment.

(a) Turn the light source to OFF, but keep the blower ON until the lamp and case are cool.

BOEING PROPRIETARY - Copyright © Unpublished Work - See title page for details

DATE	TAIL NUMBER	STATION	AIRLINE CARD NO.	BOEING CARD NO.
				72-180-02-01

MECH	INSP

D. Put the Airplane Back to Its Usual Condition

SUBTASK 72-00-00-210-032-F00

CAUTION: MAKE SURE THAT THE BORESCOPE PLUGS ARE INSTALLED IN THE CORRECT PORT LOCATIONS. ENGINE DAMAGE CAN OCCUR IF A BORESCOPE PLUG IS NOT INSTALLED IN THE CORRECT LOCATION.

(1) Do these steps to install the borescope plugs as follow:

NOTE: The borescope plug to the LPT stage 1 and combustion case have the same thread size. The stem of the borescope plug to the LPT stage 1 nozzle will be burned away if it is installed in the borescope port for the combustion case.

(a) Lubricate the threads of the borescope plugs with graphite compound, D00601 [CP2101], pure nickel special compound, D50034 [CP2619] or milk of magnesia compound, D50032 [CP1064].

(b) Install the borescope plugs.

1) Tighten each borescope plug to 57-63 pound-inches (6.5-7.1 Newton-meters).

2) Install a safety wire, G02345 [CP8001] or cable, G50065 [CP8006] on each borescope plug.

SUBTASK 72-00-00-210-033-F00

(2) If it is necessary, do this task: Main Igniter Plug Installation, AMM TASK 74-21-02-400-801-F00.

SUBTASK 72-00-00-210-034-F00

(3) If the borescope inspection is complete, do this task: Put the Airplane Back to Its Usual Condition, TASK 72-00-00-200-814-F00.

END OF TASK

BOEING PROPRIETARY - Copyright © Unpublished Work - See title page for details

MECH	INSP

TASK 72-00-00-200-814-F00

3. Put the Airplane Back to Its Usual Condition

A. General

(1) This task provides the instructions on how to put the airplane back to its usual condition after an inspection.

B. Put the Airplane Back to Its Usual Condition

SUBTASK 72-00-00-080-009-F00

CAUTION: MAKE SURE THERE ARE NO TOOLS, PARTS, OR OTHER UNWANTED MATERIAL IN THE INLET COWL. IF YOU DO NOT OBEY THESE INSTRUCTIONS, YOU CAN CAUSE DAMAGE TO THE ENGINE.

(1) Remove the protective mat, STD-585 from the inner surface of the inlet cowl.

SUBTASK 72-00-00-210-100-F00

(2) Disassemble the borescope equipment as follows:

(a) Turn the light source to OFF.

1) Keep the blower ON until the lamp and case are cool.

(b) Make sure that the power switch is OFF.

(c) Make sure that the light intensity control is set to minimum.

(d) Disconnect the power supply and the ground.

(e) Disconnect the extension and the viewer from the borescope.

(f) Disconnect the borescope from the fiber light cable.

(g) Disconnect the fiber light cable from the light source.

SUBTASK 72-00-00-210-101-F00

CAUTION: MAKE SURE THAT YOU INSTALL THE COVER ON THE GEARBOX. IF YOU DO NOT INSTALL THE COVER, ENGINE OIL LEAKS CAN OCCUR DURING OPERATION AND ENGINE DAMAGE CAN OCCUR.

(3) If not already done, do this task: Handcranking Drive Cover Installation, AMM TASK 72-63-01-400-801-F00.

SUBTASK 72-00-00-410-045-F00

WARNING: OBEY THE INSTRUCTIONS IN THE PROCEDURE TO CLOSE THE THRUST REVERSERS. IF YOU DO NOT OBEY THE INSTRUCTIONS, INJURIES TO PERSONS AND DAMAGE TO EQUIPMENT CAN OCCUR.

(4) Do these tasks in sequence to safely close the left and right thrust reversers:

(a) Do this task: Close the Thrust Reverser (Selection), AMM TASK 78-31-00-010-804-F00.

(b) Do this task: Close the Fan Cowl Panels, AMM TASK 71-11-02-410-801-F00.

(c) Do this task: Thrust Reverser Activation after Ground Maintenance, AMM TASK 78-31-00-440-803-F00.

BOEING PROPRIETARY - Copyright © Unpublished Work - See title page for details

DATE	TAIL NUMBER	STATION	AIRLINE CARD NO.	BOEING CARD NO.
				72-180-02-01

MECH	INSP

SUBTASK 72-00-00-860-078-F00

(5) For Engine 1, remove the safety tag and close this circuit breaker:

CAPT Electrical System Panel, P18-2

Row	Col	Number	Name
B	8	C01103	ENGINE 1 START VALVE

SUBTASK 72-00-00-860-079-F00

(6) For Engine 2, remove the safety tag and close this circuit breaker:

F/O Electrical System Panel, P6-2

Row	Col	Number	Name
C	4	C00154	ENGINE 2 START VALVE

SUBTASK 72-00-00-860-006-F00

(7) On the applicable engine, remove the DO-NOT-OPERATE tag from the start lever.

——— END OF TASK ———

BOEING PROPRIETARY - Copyright © Unpublished Work - See title page for details

DATE	TAIL NUMBER	STATION	AIRLINE CARD NO.	BOEING CARD NO.
				72-180-02-01

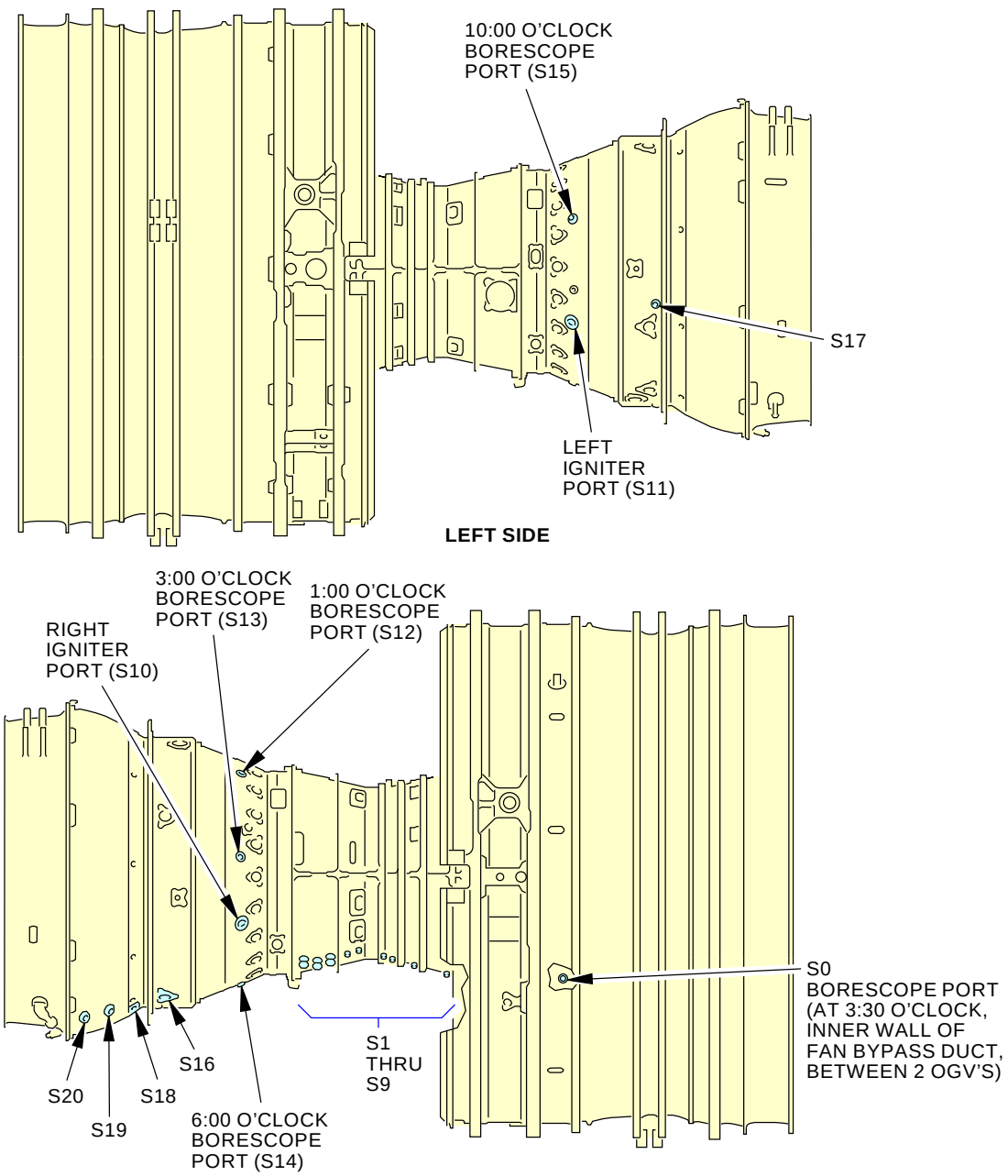

NOTE:

SOME ENGINE COMPONENTS REMOVED FOR CLARITY.

S-M56-MM-03504-00-B
H50646 S0006582226_V2

Borescope Port Locations
Figure 1

BOEING PROPRIETARY - Copyright © Unpublished Work - See title page for details

DATE	TAIL NUMBER	STATION	AIRLINE CARD NO.	BOEING CARD NO.
				72-180-02-01

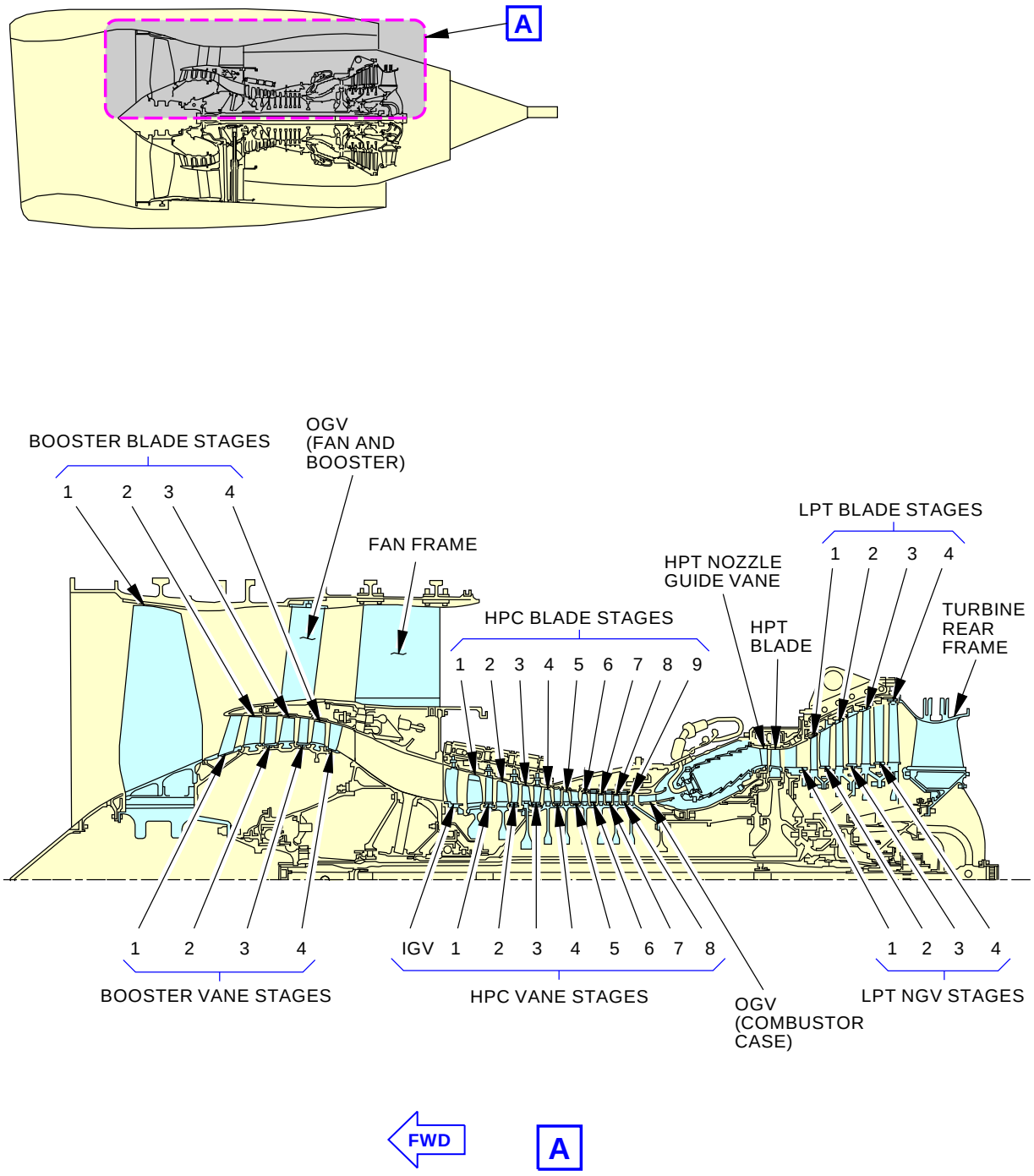

G47263 S0006582229_V3

Engine Airfoil Count
Figure 2 (Sheet 1 of 2)

BOEING PROPRIETARY - Copyright © Unpublished Work - See title page for details

NOMENCLATURE	STAGE	NUMBER OF BLADES
FAN AND BOOSTER	1	24
	2	74
	3	78
	4	74
HIGH PRESSURE COMPRESSOR (HPC)	1	38
	2	53
	3	60
	4	68
	5	75
	6	82
	7	82
	8	80
	9	76
HIGH PRESSURE TURBINE (HPT) NON-7BE ENGINE		80
HIGH PRESSURE TURBINE HPT 7BE ENGINE		76
LOW PRESSURE TURBINE (LPT) NON-7BE ENGINE	1	162
	2	150
	3	150
	4	134
LOW PRESSURE TURBINE LPT 7BE ENGINE	1	154
	2	134
	3	136
	4	138

G48151 S0006582230_V4

Engine Airfoil Count
Figure 2 (Sheet 2 of 2)

BOEING PROPRIETARY - Copyright © Unpublished Work - See title page for details

DATE	TAIL NUMBER	STATION	AIRLINE CARD NO.	BOEING CARD NO.
				72-180-02-01

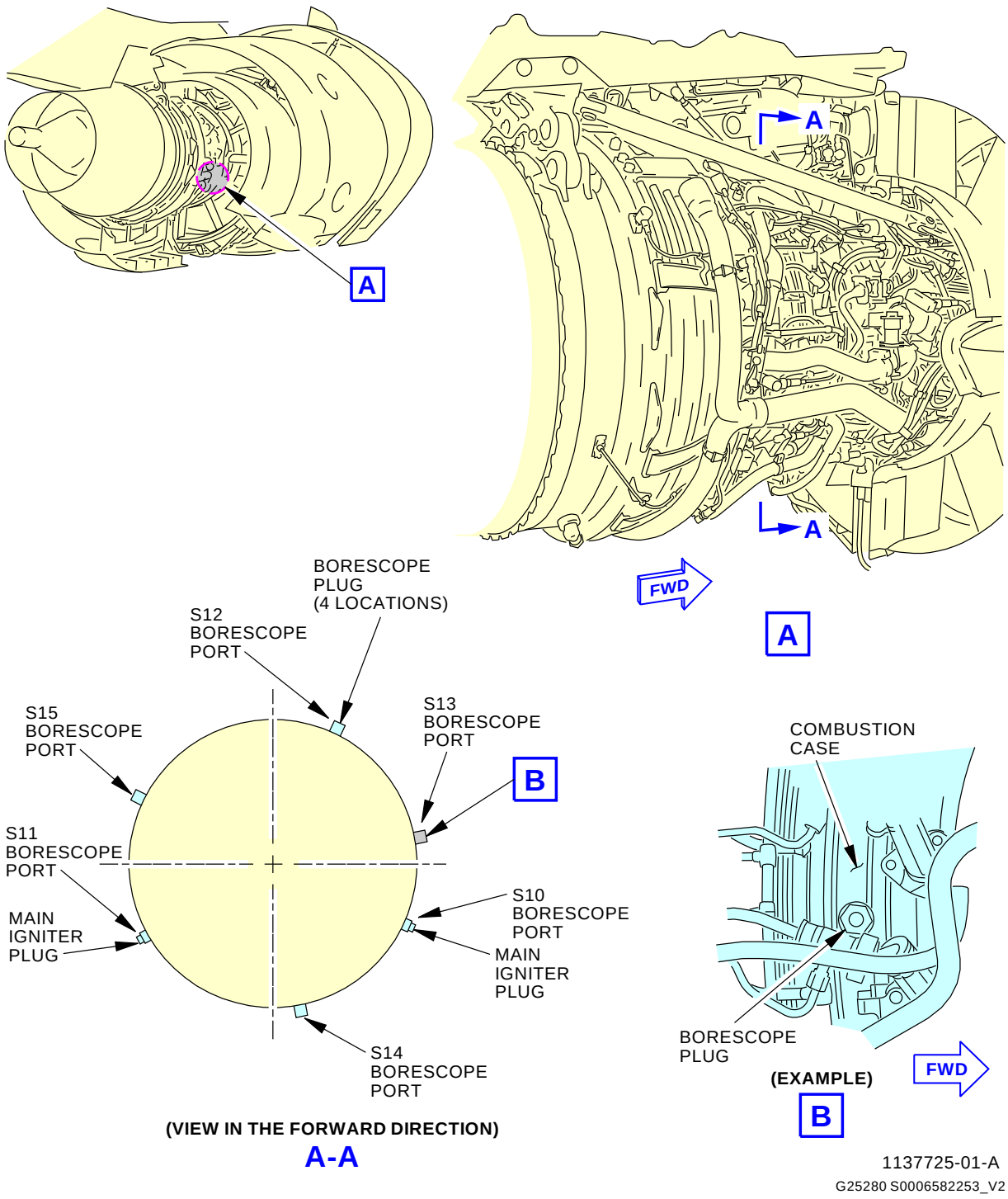

Combustion Chamber Borescope Port Locations
Figure 3

BOEING PROPRIETARY - Copyright © Unpublished Work - See title page for details

DATE	TAIL NUMBER	STATION	AIRLINE CARD NO.	BOEING CARD NO.
				72-180-02-01

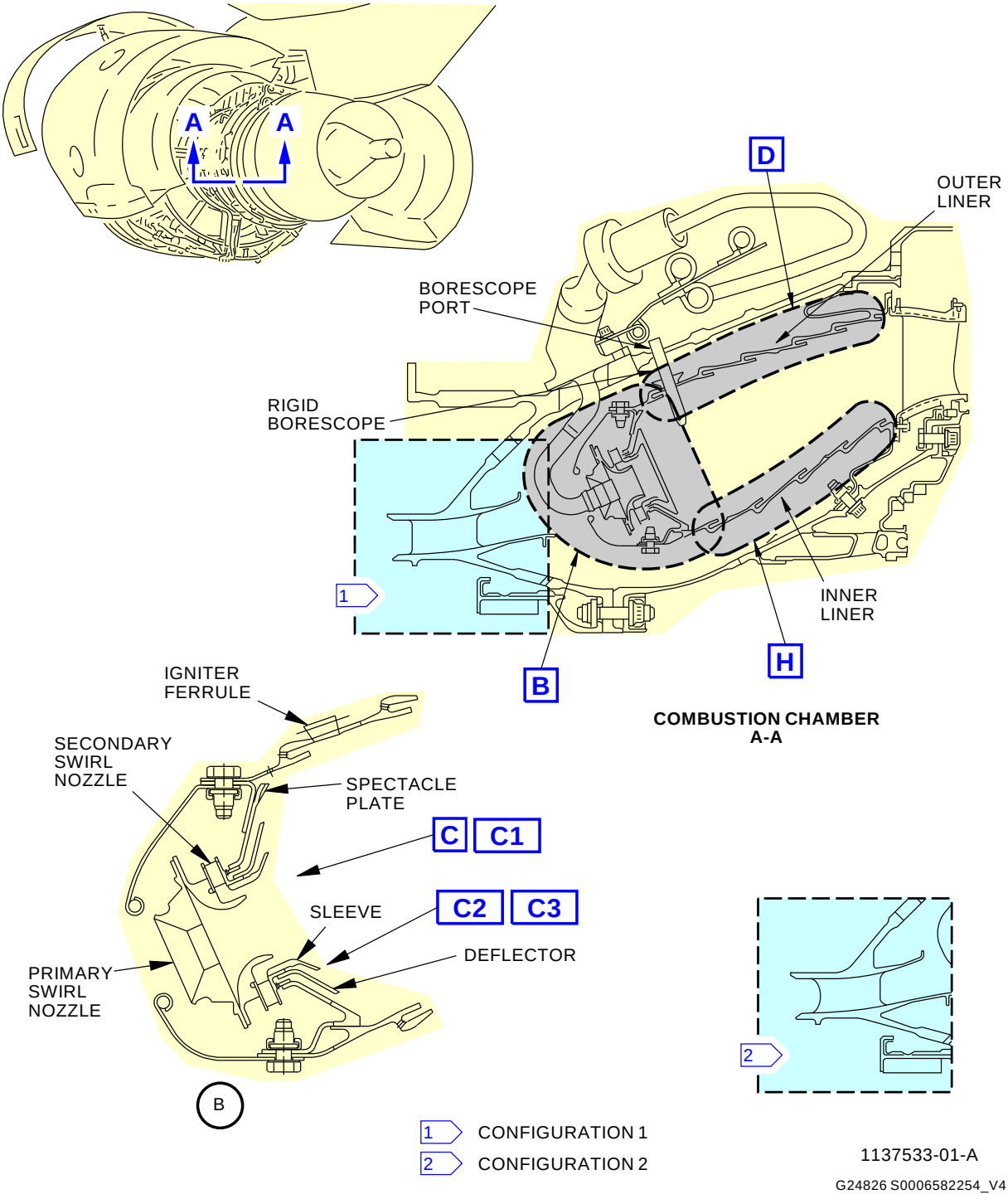

Combustion Section Borescope Inspection
Figure 4 (Sheet 1 of 9)

BOEING PROPRIETARY - Copyright © Unpublished Work - See title page for details

DATE	TAIL NUMBER	STATION	AIRLINE CARD NO.	BOEING CARD NO.
				72-180-02-01

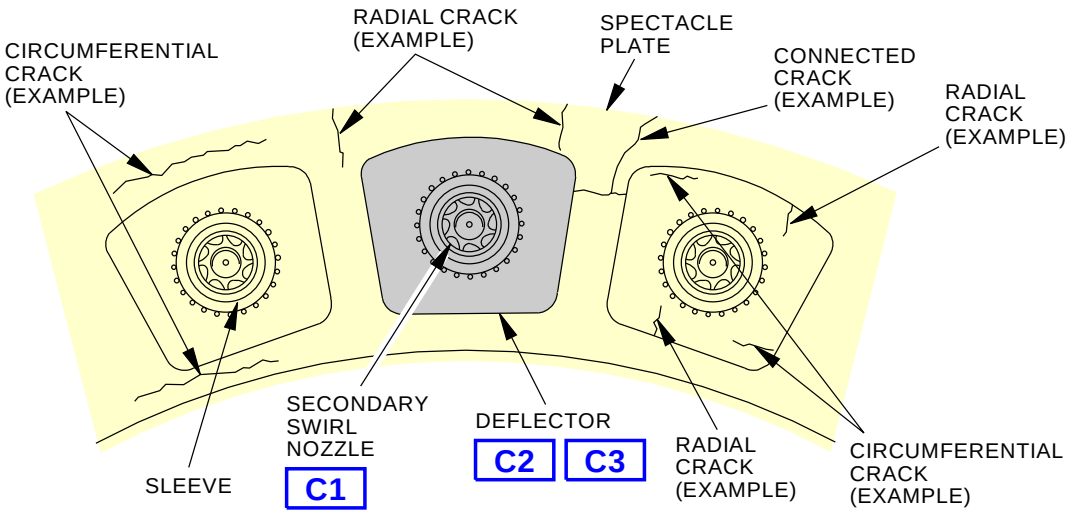

DOME AREA CRACK DAMAGE (EXAMPLE)

C

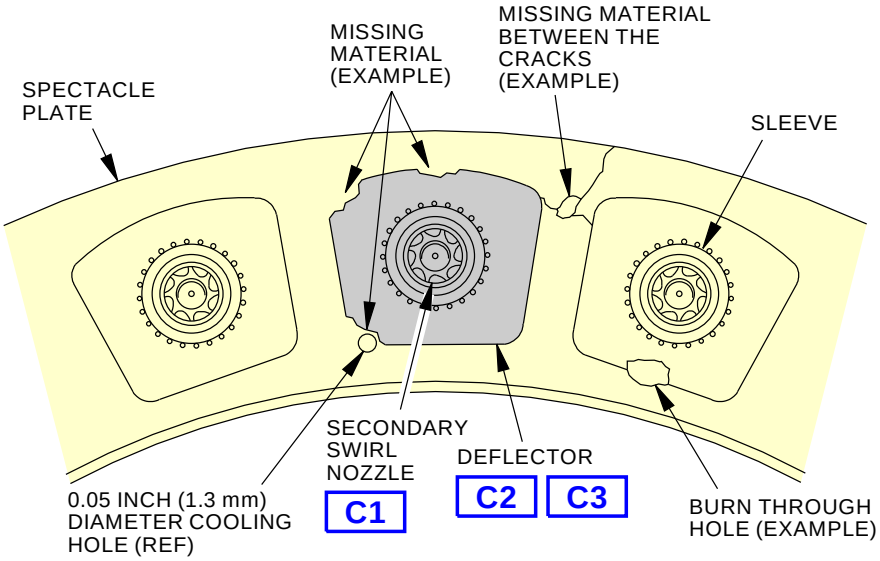

DOME AREA MISSING MATERIAL DAMAGE (EXAMPLE)

C

1137534-02-A

G24887 S0006582255_V5

Combustion Section Borescope Inspection
Figure 4 (Sheet 2 of 9)

BOEING PROPRIETARY - Copyright © Unpublished Work - See title page for details

DATE	TAIL NUMBER	STATION	AIRLINE CARD NO.	BOEING CARD NO.
				72-180-02-01

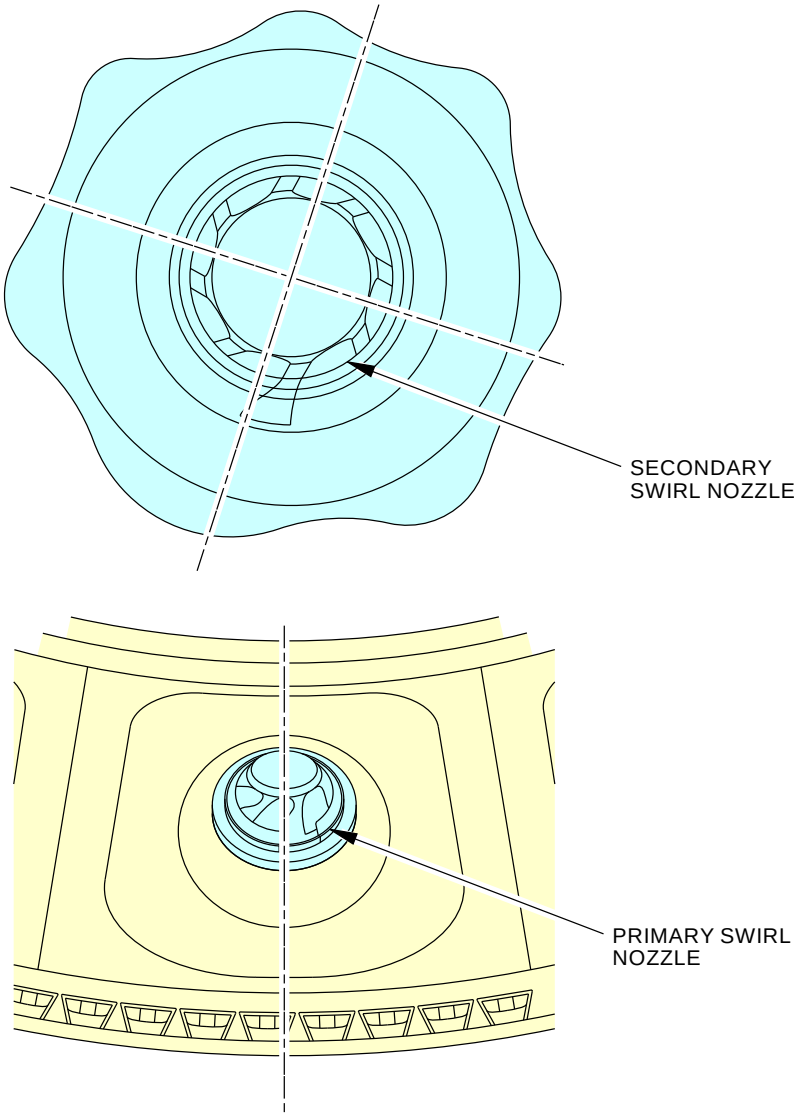

C1

5007925-00

2397102 S0000553802_V1

Combustion Section Borescope Inspection
Figure 4 (Sheet 3 of 9)

BOEING PROPRIETARY - Copyright © Unpublished Work - See title page for details

DATE	TAIL NUMBER	STATION	AIRLINE CARD NO.	BOEING CARD NO.
				72-180-02-01

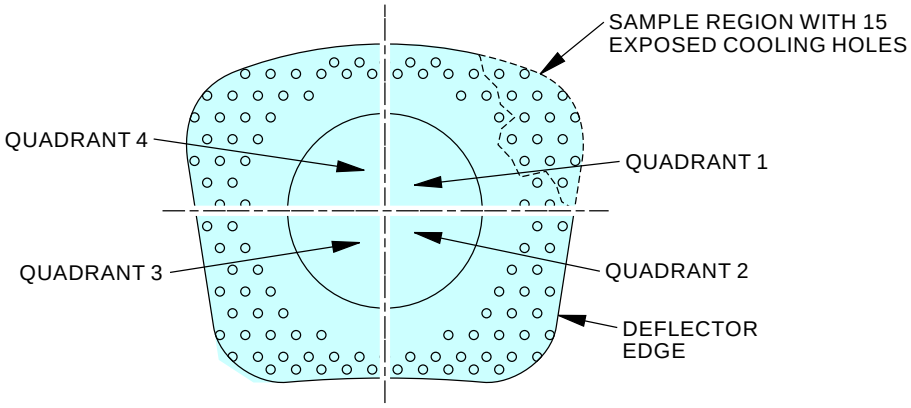

DOME IN QUADRANT DEFINITION
(AFT LOOKING FORWARD)

C2

SAMPLE EXPOSED COOLING HOLES

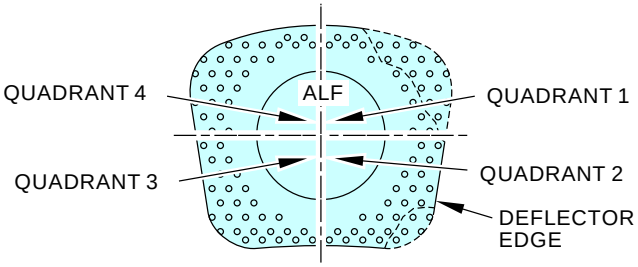

OR

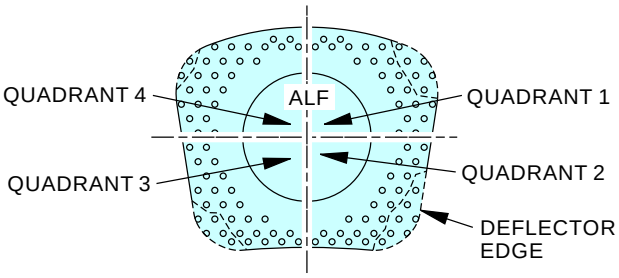

C3

5007927-00

2088288 S0000440608_V3

Combustion Section Borescope Inspection
Figure 4 (Sheet 4 of 9)

BOEING PROPRIETARY - Copyright © Unpublished Work - See title page for details

DATE	TAIL NUMBER	STATION	AIRLINE CARD NO.	BOEING CARD NO.
				72-180-02-01

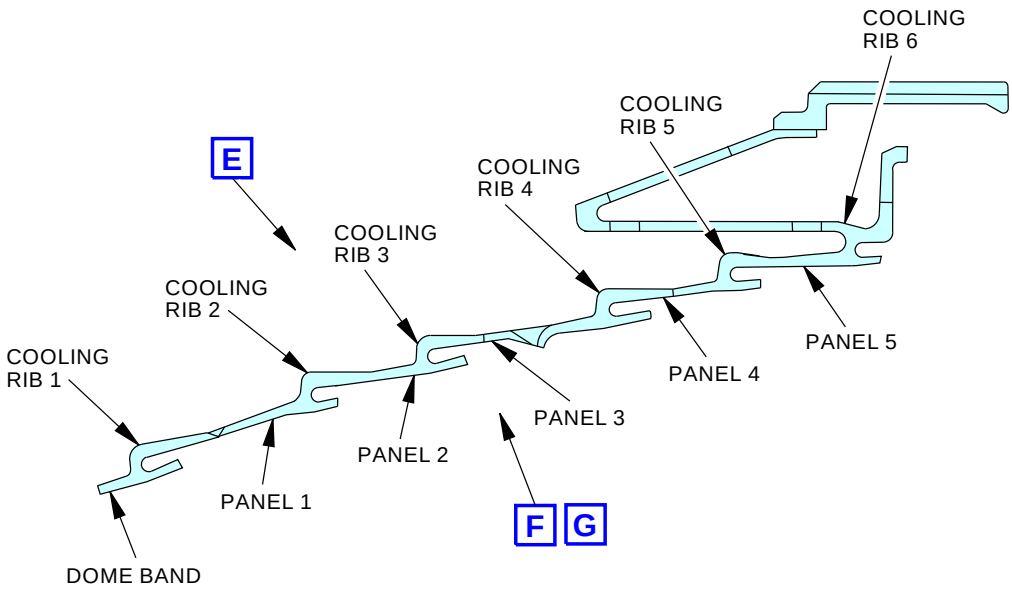

OUTER LINER

D

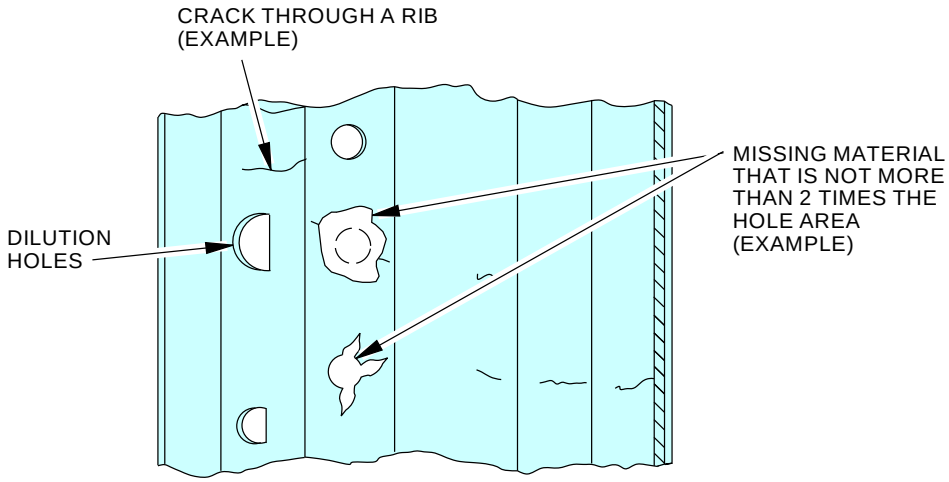

OUTER LINER CRACKS AND MISSING MATERIAL DAMAGE (EXAMPLE)

E

1250655-00

1307448 S0000226565_V2

Combustion Section Borescope Inspection
Figure 4 (Sheet 5 of 9)

BOEING PROPRIETARY - Copyright © Unpublished Work - See title page for details

DATE	TAIL NUMBER	STATION	AIRLINE CARD NO.	BOEING CARD NO.
				72-180-02-01

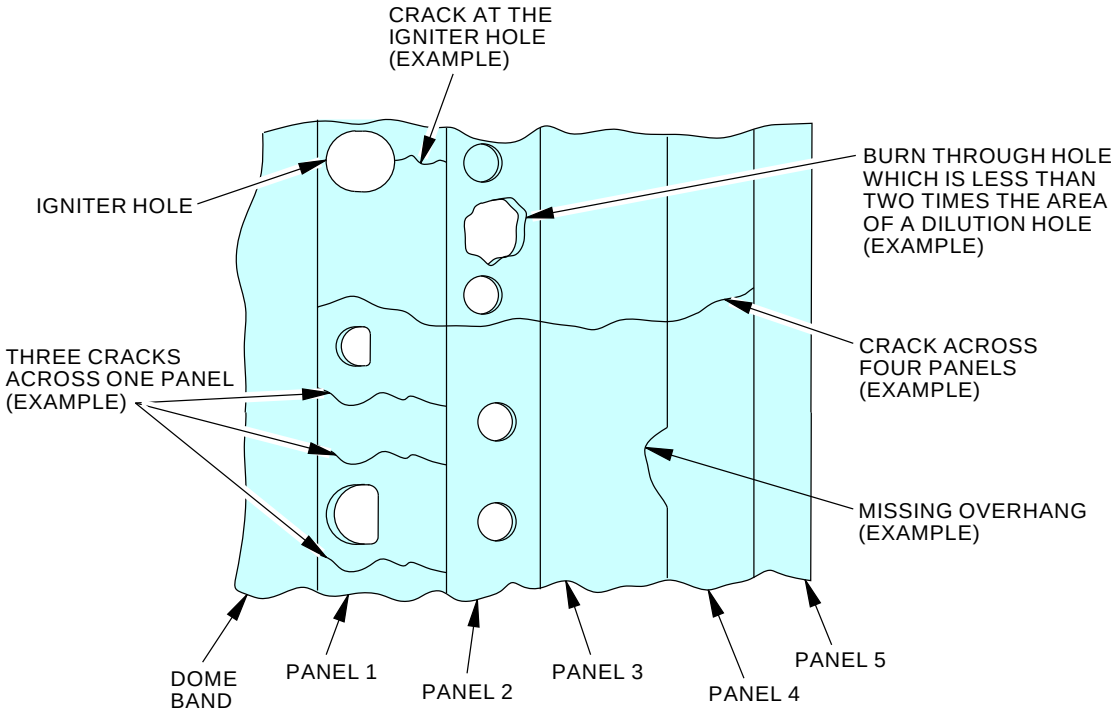

OUTER LINER CRACKS AND MISSING MATERIAL DAMAGE

F

1250656-00

1307795 S0000226567_V2

Combustion Section Borescope Inspection
Figure 4 (Sheet 6 of 9)

BOEING PROPRIETARY - Copyright © Unpublished Work - See title page for details

DATE	TAIL NUMBER	STATION	AIRLINE CARD NO.	BOEING CARD NO.
				72-180-02-01

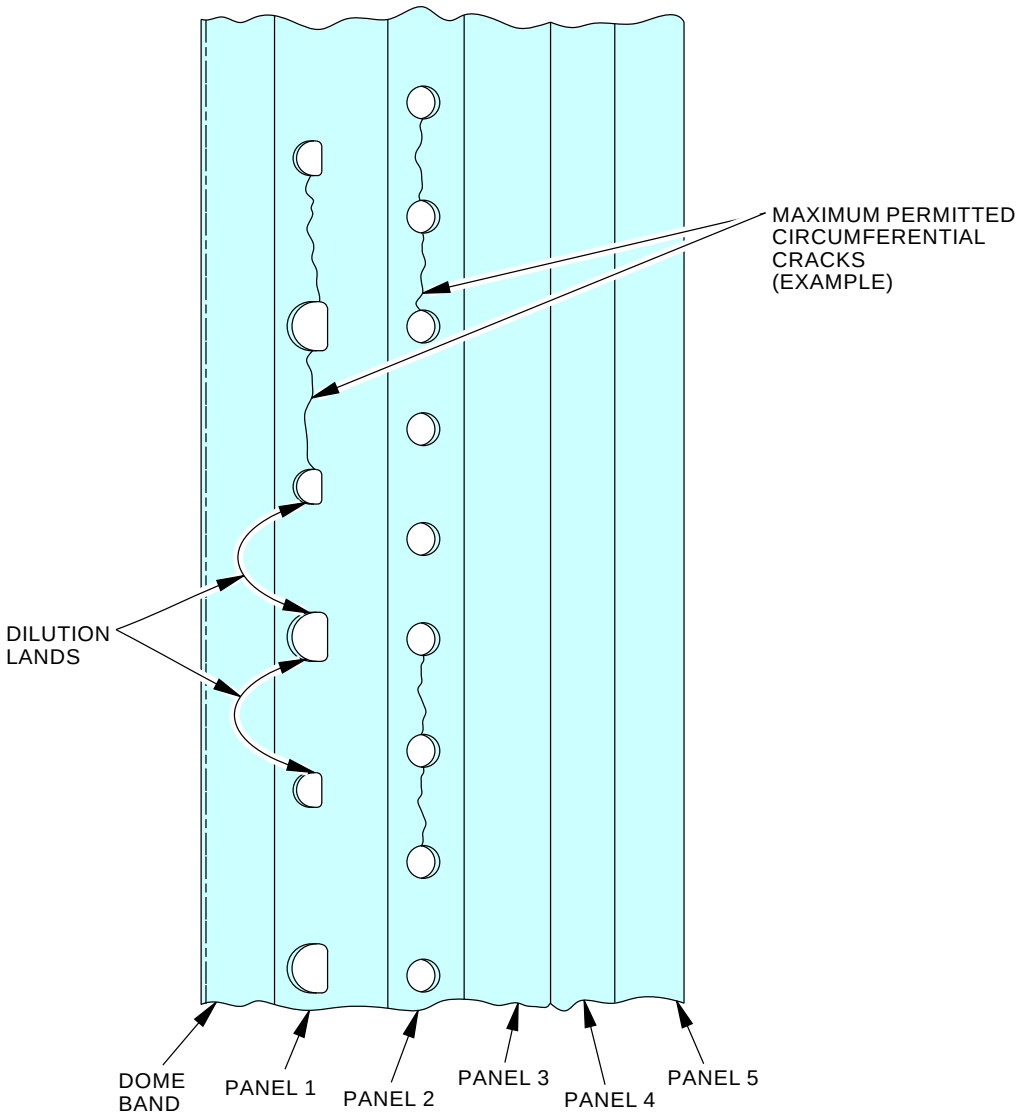

OUTER LINER CIRCUMFERENTIAL CRACK DAMAGE

G

1250657-00

1307838 S0000226568_V2

Combustion Section Borescope Inspection
Figure 4 (Sheet 7 of 9)

BOEING PROPRIETARY - Copyright © Unpublished Work - See title page for details

DATE	TAIL NUMBER	STATION	AIRLINE CARD NO.	BOEING CARD NO.
				72-180-02-01

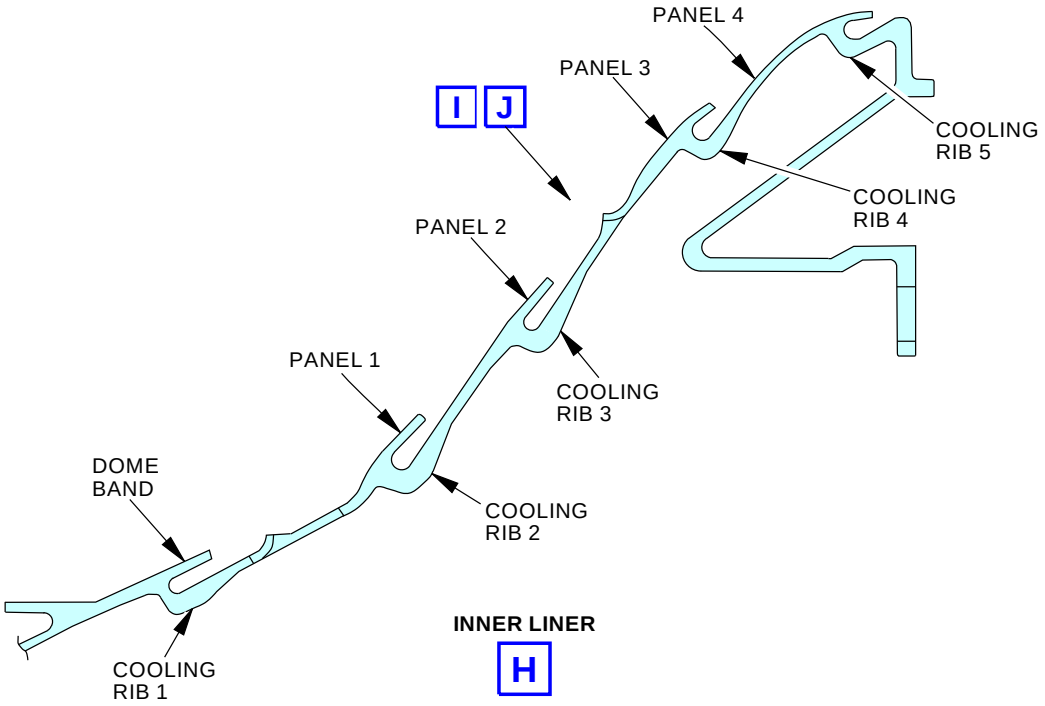

INNER LINER

H

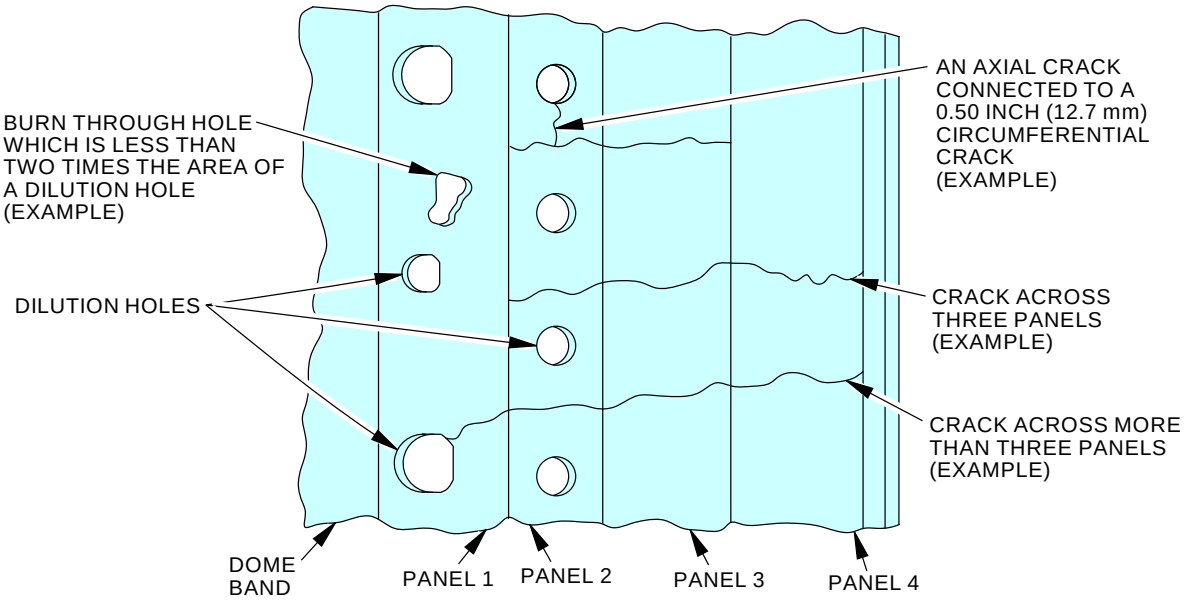

INNER LINER FOR CRACKS AND BURN THROUGH

I

1250658-00
1307932 S0000226569_V2

Combustion Section Borescope Inspection
Figure 4 (Sheet 8 of 9)

BOEING PROPRIETARY - Copyright © Unpublished Work - See title page for details

DATE	TAIL NUMBER	STATION	AIRLINE CARD NO.	BOEING CARD NO.
				72-180-02-01

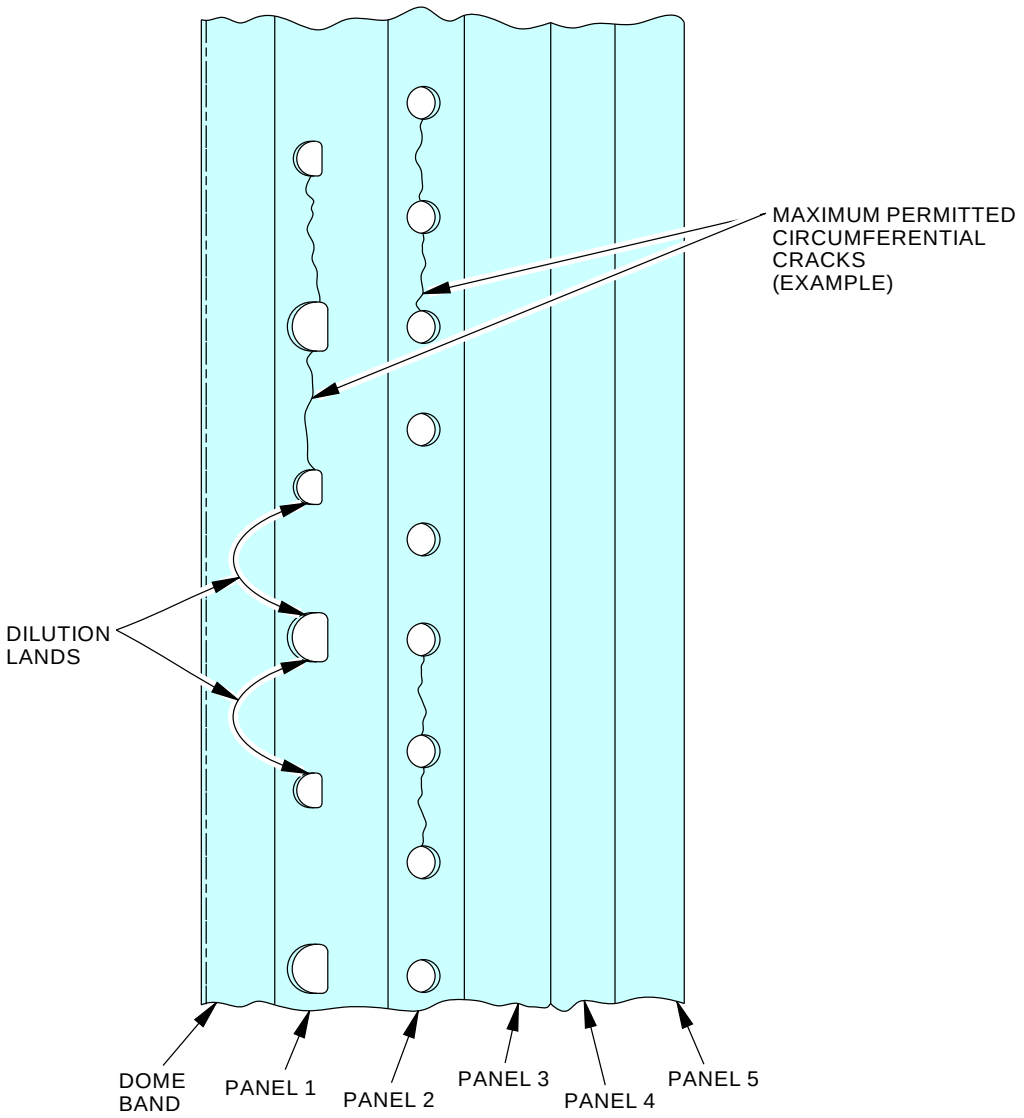

INNER LINER FOR CRACKS AND BURN THROUGH

J

1250659-00

1307933 S0000226570_V2

Combustion Section Borescope Inspection
Figure 4 (Sheet 9 of 9)

BOEING PROPRIETARY - Copyright © Unpublished Work - See title page for details

DATE	TAIL NUMBER	STATION	AIRLINE CARD NO.	BOEING CARD NO.
				72-180-02-01

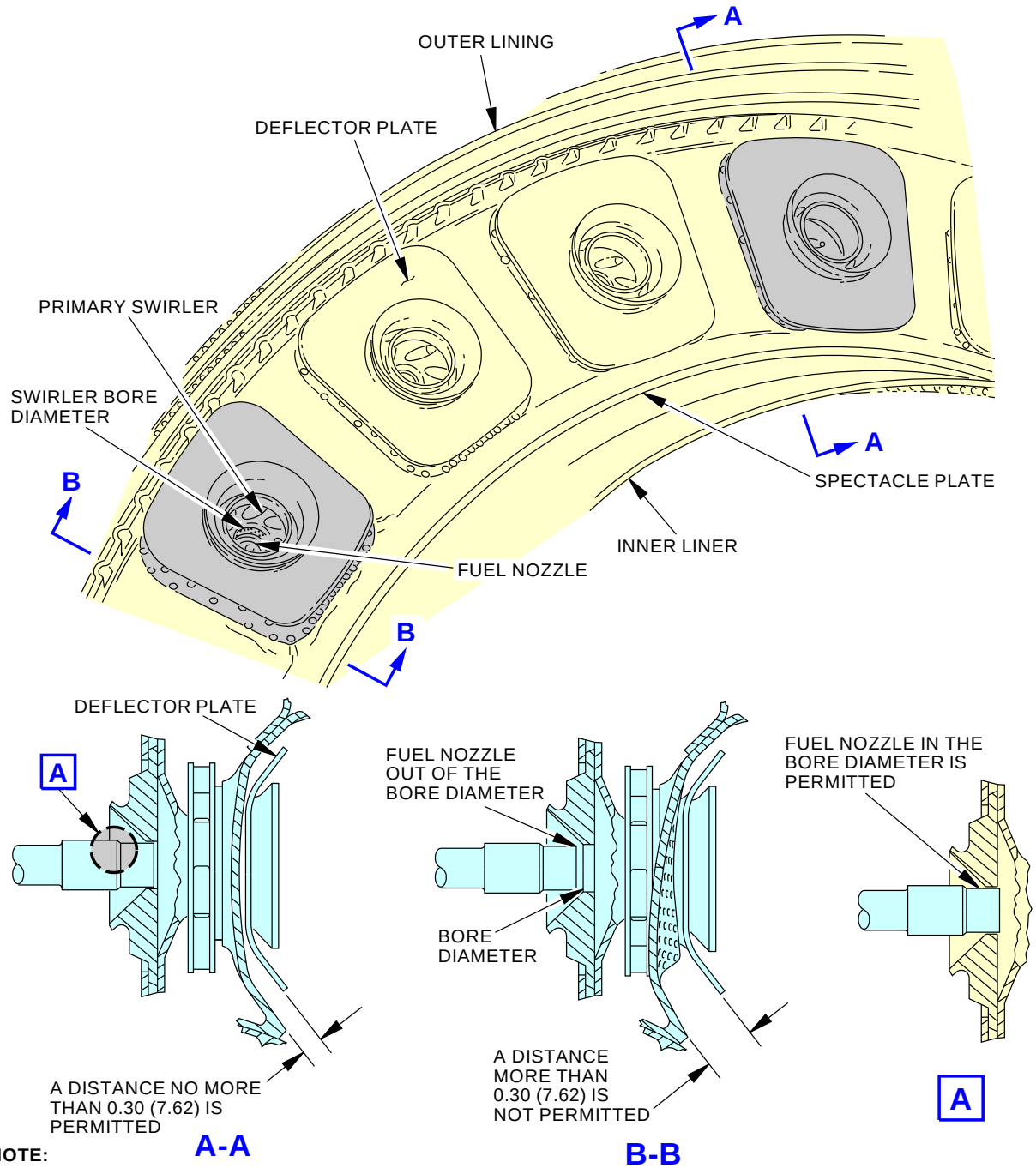

NOTE:

ALL DIMENSIONS ARE IN INCHES WITH MILLIMETERS IN PARENTHESES.

GMM-1096836-00-B
L35434 S0006582261_V2

After Bird Strike Combustion Section Borescope Inspection
Figure 5

BOEING PROPRIETARY - Copyright © Unpublished Work - See title page for details

AIRLINE CARD NO		TITLE			BOEING CARD NO.
		LEFT ENGINE HPT NOZZLE. (SAC /1 ENGINES)			72-200-01-01
DATE	TASK				RELATED CARD
	INSPECTION - DETAILED				
TAIL NUMBER	WORK AREA	VERSION	THRESHOLD	REPEAT	APPLICABILITY
	LEFT ENGINE	1.1 1.2	6600 FC 15000 FH	1600 FC 4000 FH	AIRPLANE: ALL ENGINE: ALL
STATION	SKILL				
	ENGIN				
		ACCESS			ZONE
		415 416			411

Borescope inspection of the left engine HPT nozzle. (SAC /1 and DAC engines)

A. References

Reference	Title
AMM 70-10-03-910-801-F00	Temporary Marking Procedures (P/B 201)
AMM 71-11-02-010-801-F00	Open the Fan Cowl Panels (P/B 201)
AMM 71-11-02-410-801-F00	Close the Fan Cowl Panels (P/B 201)
AMM 72-00-00-200-807-F00	HPT Blades Borescope Inspection (P/B 601)
AMM 72-00-00-980-802-F00	Find the Zero Index Mark on the N2 Rotor (P/B 201)
AMM 72-63-01-400-801-F00	Handcranking Drive Cover Installation (P/B 201)
AMM 74-21-02-000-801-F00	Main Igniter Plug Removal (P/B 401)
AMM 74-21-02-400-801-F00	Main Igniter Plug Installation (P/B 401)
AMM 78-31-00-010-801-F00	Open the Thrust Reverser (Selection) (P/B 201)
AMM 78-31-00-010-804-F00	Close the Thrust Reverser (Selection) (P/B 201)
AMM 78-31-00-040-802-F00	Thrust Reverser Deactivation For Ground Maintenance (P/B 201)
AMM 78-31-00-440-803-F00	Thrust Reverser Activation After Ground Maintenance (P/B 201)

B. Consumable Materials

Reference	Description	Specification
D00601 [CP2101]	High-temperature graphite compound	SAE AMS 2518
D50032 [CP1064]	Compound - Antiseize - Milk of Magnesia	
D50034 [CP2619]	Compound - Antiseize - Pure Nickel Special, Never - Seez	CFM CP2619
G01043	Cloth - Lint-free	
G02345 [CP8001]	Wire - Safety, 0.032 Inch (0.8 mm) Diameter	CFM CP8001, AMS 5687
G02481 [CP2801]	Marker - Temporary	
G50065 [CP8006]	Cable, Safety, Stainless Steel, 0.032 inch (0.813 mm) Diameter	M50 TF 9 CL-A

BOEING PROPRIETARY - Copyright © Unpublished Work - See title page for details

C. Tools/Equipment

NOTE: When more than one tool part number is listed under the same "Reference" number, the tools shown are alternates to each other within the same airplane series. Tool part numbers that are replaced or non-procurable are preceded by "Opt:", which stands for Optional.

Reference	Description
COM-2195	Set - Borescope Rigid, Olympus Part #: 856A1320P04 Supplier: 58828
COM-2196	Set - Borescope Fiber, 6 mm diameter Part #: 856A1321P05 Supplier: 58828 Part #: 856A1321P06 Supplier: 58828 Opt Part #: 856A1321P03 Supplier: 58828
COM-4302	Set - Borescope Rigid, Wolf Part #: 856A1320P05 Supplier: 58828
COM-4303	Set - Borescope Rigid, Lenox Part #: 856A1320P06 Supplier: 58828
COM-4304	Set - Borescope Rigid, ITI USA Part #: 856A1320P07 Supplier: 58828
SPL-2197	Light Source - Borescope, Lenox (150W) Part #: 856A1322P02 Supplier: 58828
SPL-2198	Kit - Borescope Guide, HP Turbine, CFM56 Engines Part #: 856A1310G01 Supplier: 58828
SPL-2207	Guide Tube - Borescope, HPT Shroud, CFM56 Engines Part #: 856A1351P01 Supplier: 58828
SPL-4305	Light Source - Borescope, Olympus (150W) Part #: 856A1322P03 Supplier: 58828
SPL-4306	Light Source - Borescope, Wolf (300W) Part #: 856A1322P04 Supplier: 58828
SPL-4307	Light Source - Borescope, Machida Part #: 856A1322P07 Supplier: 58828
SPL-4308	Light Source - Borescope, ITI USA (150W) Part #: 856A1322P08 Supplier: 58828
STD-10711	Shop Vacuum (400Hz if using aircraft power)
STD-585	Mat - Protective, 3/8 Inch (9.5 mm) Minimum Thickness, Minimum 42x60 Inches (1x1.5 meters) with Warning Streamers

BOEING PROPRIETARY - Copyright © Unpublished Work - See title page for details

MECH	INSP

TASK 72-00-00-200-802-F00

1. Borescope Inspection Preparation

(Figure 1 and Figure 2)

A. General

(1) This task provides the instructions on how to prepare for the borescope inspection.

B. Borescope Inspection Preparation

SUBTASK 72-00-00-860-001-F00

(1) For the applicable engine, install a DO-NOT-OPERATE tag on the start lever.

SUBTASK 72-00-00-860-080-F00

(2) For Engine 1, open this circuit breaker and install a safety tag:

CAPT Electrical System Panel, P18-2

Row	Col	Number	Name
B	8	C01103	ENGINE 1 START VALVE

SUBTASK 72-00-00-860-081-F00

(3) For Engine 2, open this circuit breaker and install a safety tag:

F/O Electrical System Panel, P6-2

Row	Col	Number	Name
C	4	C00154	ENGINE 2 START VALVE

SUBTASK 72-00-00-860-082-F00

(4) Do these tasks in sequence to safely open the left and right thrust reversers on the applicable engine:

WARNING: DO THE DEACTIVATION PROCEDURE FOR THE THRUST REVERSER TO PREVENT THE OPERATION OF THE THRUST REVERSER. ACCIDENTAL OPERATION OF THE THRUST REVERSER CAN CAUSE INJURIES TO PERSONS OR DAMAGE TO EQUIPMENT.

(a) Do this task: Thrust Reverser Deactivation for Ground Maintenance, AMM TASK 78-31-00-040-802-F00.

(b) Open the left and right fan cowl panels (AMM TASK 71-11-02-010-801-F00).

WARNING: OBEY THE INSTRUCTIONS IN THE PROCEDURE TO OPEN THE THRUST REVERSERS. IF YOU DO NOT OBEY THE INSTRUCTIONS, INJURIES TO PERSONS AND DAMAGE TO EQUIPMENT CAN OCCUR.

(c) Open the left and right thrust reversers (AMM TASK 78-31-00-010-801-F00).

BOEING PROPRIETARY - Copyright © Unpublished Work - See title page for details

MECH	INSP

SUBTASK 72-00-00-480-001-F00

(5) Refer to the applicable steps and borescope equipment to prepare for the inspection:

NOTE: For this procedure, borescope equipment is used for all inspections but not for the axial preload check of the Stage 4 LPT blades.

NOTE: Refer to the CFM Illustrated Tool and Equipment manual for the current part number for all the borescope equipment.

NOTE: Alternative borescope equipment that is as good or better than the CFM Borescope Specification is permitted for use. Refer to the CFM Non-Destructive Test Manual (CFM-TP-NT.11), Borescope Inspection, Part 7, for requirements.

CAUTION: MAKE SURE THAT THE POWER SWITCH IS IN THE OFF POSITION AND THE LIGHT INTENSITY CONTROL IS SET AT MINIMUM BEFORE YOU CONNECT THE LIGHT SOURCE TO THE POWER SUPPLY. MAKE SURE THE LIGHT SOURCE AND THE POWER SUPPLY ARE CORRECTLY ATTACHED TO A GROUND. DAMAGE TO THE EQUIPMENT CAN OCCUR.

(a) Connect the applicable light source to a power source that is grounded.

(b) You will use these borescope tools to do a complete borescope inspection of the engine:

NOTE: For more data on the use of this borescope equipment, refer to CFM NDTM 72-00-00, Part 7.

It is not recommended to do a borescope inspection at temperatures more than 150 degrees F (65.6 degrees C). You can do a dry motor to increase the engine cool down rate.

1) The applicable borescope and light source
   a) Rigid Borescope, COM-2195 and light source, SPL-4305
   b) Rigid Borescope, COM-4302 and light source, SPL-4306
   c) Rigid Borescope, COM-4303 and light source, SPL-2197
   d) Rigid Borescope, COM-4304 and light source, SPL-4308
   e) alternative light source, SPL-4307
2) The monitor, MSE-64
3) The fiber borescope, COM-2196 to do the inspection of these areas:
   a) The combustion chamber
   b) The HPT nozzle guide vanes
   c) The HPT blades.
4) The borescope guide kit, SPL-2198 and the borescope guide tube, SPL-2207 to do the inspection of these areas:
   a) The HPT nozzle guide vanes
   b) The HPT blades.

BOEING PROPRIETARY - Copyright © Unpublished Work - See title page for details

DATE	TAIL NUMBER	STATION	AIRLINE CARD NO.	BOEING CARD NO.
				72-200-01-01

MECH	INSP

SUBTASK 72-00-00-210-001-F00

(6) If it is necessary to index the N2 rotor, do this task: Find the Zero Index Mark on the N2 Rotor, AMM TASK 72-00-00-980-802-F00.

NOTE: It is recommended that you stop the N2 rotor when you put each blade in position for inspection. This will permit you to do a full inspection of each blade.

SUBTASK 72-00-00-210-002-F00

(7) If it is necessary to turn or index the N1 rotor, do these steps:

(a) Put a protective mat, STD-585 in the inlet cowl.

(b) Find the number one fan blade.

NOTE: The fan blade 1 is adjacent to a machined dimple in the aft area of the rear spinner cone.

(c) Use a marker, G02481 [CP2801] to make a mark to identify the number one fan blade (AMM TASK 70-10-03-910-801-F00).

(d) Align the leading edge of the number one fan blade with the T12 temperature sensor.

NOTE: The T12 temperature sensor is approximately at the 10:30 o'clock position as you look in the inlet cowl.

SUBTASK 72-00-00-210-129-F00

(8) Do a general visual inspection of the primary plug assembly for oil puddling.

NOTE: An oil puddle in the exhaust system can occur after the engine is dry or wet motored (refer to task 71–71–00–200–801–F00).

SUBTASK 72-00-00-100-016-F00

(9) If oil puddling is found, remove the oil from the primary plug:

(a) Clean oil from the surface with a lint-free cloth, G01043. A vacuum, STD-10711 can be used to remove unwanted oil.

——— END OF TASK ———

BOEING PROPRIETARY - Copyright © Unpublished Work - See title page for details

MECH	INSP

TASK 72-00-00-200-806-F00

2. HPT Nozzle Guide Vanes Borescope Inspection (SAC (/1) and DAC Engines)

A. General

(1) This task provides the steps on how to do the borescope inspection of the HPT nozzle guide vanes for SAC (/1) engines and DAC engines.

B. Prepare for the Inspection

SUBTASK 72-00-00-210-035-F00

(1) If not already done, do this task: Borescope Inspection Preparation, TASK 72-00-00-200-802-F00.

SUBTASK 72-00-00-210-122-F00

(2) Make sure that you verify the version of the CFM56 engine on the data placard.

NOTE: The newest version of the CFM56-7B series engine is the CFM56-7BEXX engine. The “XX” in CFM56-7BXX/3 is the thrust rating of the engine. This information is found on the engine data placard on the engine fan case.

NOTE: A Tech Insertion (TI) engine has a “/3” after the thrust rating on the engine data plate. An example of a Singular Annular Combustor (SAC) Engine with TI is CFM56-7B22/3. An example of a non-TI engine is CFM56-7B22. The “XX” in CFM56-7BXX/3 is the thrust rating of the engine. This information is found on the engine data placard on the engine fan case.

SUBTASK 72-00-00-010-006-F00

(3) Remove the S13 and S15 borescope plugs (Figure 6 and Figure 7):

NOTE: To do an initial inspection, it is only necessary to remove the S13 and S15 borescope plugs. If you find damage, you must remove the main igniter plugs and the other borescope plugs to do a complete inspection.

SUBTASK 72-00-00-010-007-F00

(4) If you find damage from the initial inspection, do these steps to remove the main igniter plugs and the other borescope plugs:

NOTE: The port for the 4:00 o'clock main igniter plug is referred to as the S10 borescope port. The port for the 8:00 o'clock main igniter plug is referred to as the S11 borescope port.

(a) Do this task: Main Igniter Plug Removal, AMM TASK 74-21-02-000-801-F00.

(b) Remove the S12 and S14 borescope plugs.

SUBTASK 72-00-00-210-038-F00

(5) Do these steps to prepare for the inspection of the HPT nozzle (Figure 3, Figure 4):

(a) Connect the applicable borescope to the light source.

1) Rigid Borescope, COM-2195 and light source, SPL-4305
2) Rigid Borescope, COM-4302 and light source, SPL-4306
3) Rigid Borescope, COM-4303 and light source, SPL-2197
4) Rigid Borescope, COM-4304 and light source, SPL-4308
5) Use the rigid borescope with the black band.

BOEING PROPRIETARY - Copyright © Unpublished Work - See title page for details

(b) Put the rigid borescope through the borescope port.

(c) Turn the light source ON.

SUBTASK 72-00-00-210-039-F00

(6) If a complete inspection of the nozzle convex side is necessary, do the steps that follow (Figure 3, Figure 4):

NOTE: This inspection is only necessary if you find an indication of damage on the convex side during the initial or complete inspection with the rigid probes.

(a) Connect the borescope, COM-2196 to the applicable light source.

(b) Put the borescope guide kit, SPL-2198 or borescope guide tube, SPL-2207 into the borescope port.

1) Use the borescope guide kit, SPL-2198 to do the inspection of the leading edge and the concave surfaces.

2) Use the borescope guide tube, SPL-2207 to do the inspection of the convex surfaces.

(c) Put the fiberscope through the guide tube.

(d) Make sure the borescope is correctly adjusted.

(e) Turn the lightsource ON.

C. HPT Nozzle Guide Vanes Borescope Inspection

SUBTASK 72-00-00-210-040-F00

(1) Examine the leading edges of the 42 HPT nozzle guide vanes as follow:

NOTE: To estimate the size of distress, use the applicable visual aid. To find distress locations relative to specific rows, refer to the applicable figure.

NOTE: The airfoil baffle is visible inside the airfoil when missing material occurs. It is sheet metal with cooling holes.

(a) Cracks that connect nose holes

1) There is no limit to the number with these conditions:

a) The cracks are not longer than 0.3 inch (7.60 mm).

b) There is no missing material.

2) Do the inspection again after each 800 cycle interval with these conditions:

a) The cracks are not longer than 0.3 inch (7.60 mm).

b) The total area of missing material is not more than 0.25 square inch (161 square mm) per vane. Maximum of 4 vanes per 90° arc.

c) Missing material does not extend aft of rows 3 or 9.

3) Do the inspection again after each 400 cycle interval with these conditions:

a) The cracks are not more than 1 inch (25.4 mm) in length.

b) The total area of missing material is not more than 0.25 square inch (161 square mm) per vane. Maximum of 4 vanes per 90° arc.

c) Missing material does not extend aft of rows 3 or 9.

4) The Continue-In-Service limit is 25 cycles with this condition:

BOEING PROPRIETARY - Copyright © Unpublished Work - See title page for details

MECH	INSP

a) The area of missing material is not more than 0.3 square inch (193 square mm) per vane. Maximum of 4 vanes per 90° arc.

(b) Other cracks

1) There is no limit to the number with these conditions:

a) The cracks are not longer than 0.5 inch (12.7 mm) in length.

b) There is no missing material.

2) Do the inspection again after each 800 cycle interval with these conditions:

a) The cracks are not longer than 0.5 inch (12.7 mm) in length.

b) The total area of missing material is not more than 0.25 square inch (161 square mm) per vane. Maximum of 4 vanes per 90° arc.

c) Missing material does not extend aft of rows 3 or 9.

3) Do the inspection again after each 400 cycle interval with these conditions:

a) The cracks are not more than 1 inch (25.4 mm) in length.

b) The total area of missing material is not more than 0.25 square inch (161 square mm) per vane. Maximum of 4 vanes per 90° arc.

c) Missing material does not extend aft of rows 3 or 9.

4) The Continue-In-Service limit is 25 cycles with this condition:

a) The area of missing material is not more than 0.3 square inch (193 square mm) per vane. Maximum of 4 vanes per 90° arc.

(c) Burns or spalled areas

1) There is no limit to the number with this condition:

a) The area of missing material is not more than 0.15 inch (97 square mm) per vane. Maximum of 4 vanes per 90° arc.

2) Do the inspection again after each 800 cycle interval with these conditions:

a) The total area of missing material is not more than 0.25 square inch (161 square mm) per vane. Maximum of 4 vanes per 90° arc.

b) Missing material does not extend aft of rows 3 or 9.

3) The Continue-In-Service limit is 25 cycles with this condition:

a) The area of missing material is not more than 0.3 square inch (193 square mm) per vane. Maximum of 4 vanes per 90° arc.

(d) Baffle missing material

1) Not Permitted

2) The Continue-In-Service limit is 25 cycles with this condition:

a) The area of missing material is equivalent to a rectangle defined by 4 adjacent holes.

SUBTASK 72-00-00-210-041-F00

(2) Examine the concave surfaces as follow:

(a) Radial cracks that extend from the gill holes

1) Permitted if there is no missing material.

BOEING PROPRIETARY - Copyright © Unpublished Work - See title page for details

MECH	INSP

2) Do the inspection again after each 400 cycle interval with these conditions:
   a) The missing material, cause by cracks, is not more than 0.04 square inch (25.81 square mm).
   b) No more than 4 airfoils for each engine have missing material caused by cracks.
3) The Continue-In-Service limit is 25 cycles with this condition:
   a) The missing material, caused by cracks, is not more than 0.45 square inch (290 square mm).

(b) Other cracks (not in the gill hole rows)
1) Permitted if there is no missing material.
2) Do the inspection again after each 400 cycle interval with these conditions:
   a) The missing material, cause by cracks, is not more than 0.04 square inch (25.81 square mm).
   b) No more than 4 airfoils for each engine have missing material caused by cracks.
3) The Continue-In-Service limit is 25 cycles with this condition:
   a) The missing material, caused by cracks, is not more than 0.45 square inch (290 square mm).

(c) Burns
1) There is no limit to the quantity with this condition:
   a) There is no burn-through into the inner cooling passages.
2) The Continue-In-Service limit is 25 cycles with this condition:
   a) The area which is burned through is not larger than 0.45 square inch (290 square mm) on each vane.

(d) Missing thermal barrier coating (TBC)
1) There is no limit to the quantity of TBC that can be missing.

SUBTASK 72-00-00-210-110-F00

(3) Examine the convex surfaces as follow:

NOTE: To find distress location relative to specific rows, refer to the applicable figure.

(a) Radial or axial cracks
1) Permitted if there is no missing material.
2) If there is missing material, do the inspection again after each 800 cycle interval with these conditions:
   a) The total area of missing material is not more than 0.05 square inch (39.1 square mm) per vane. Maximum of 4 vanes per 90° arc.
   b) Cracking does not occur aft of cooling hole row 16.
3) The Continue-In-Service limit is 25 cycles with this condition:
   a) The missing material, caused by cracks, is not larger than 0.45 square inch (290 square mm) on each vane.

BOEING PROPRIETARY - Copyright © Unpublished Work - See title page for details

(b) Burns or bulges

NOTE: An open area of the cavity caused by bulging is to be interpreted as missing material where the following limits apply.

1) Permitted if there is no missing material.

2) If there is missing material, do the inspection again after each 800 cycle interval with these conditions:

a) The total area of missing material is not more than 0.05 square inch (39.1 square mm) per vane. Maximum of 4 vanes per 90° arc.

b) Bulging does not occur aft of cooling hole row 16.

3) The Continue-In-Service limit 25 cycles with this condition:

a) The missing material is not larger than 0.45 square inch (290 square mm) on each vane.

(c) Missing thermal barrier coating (TBC)

1) There is no limit to the quantity of TBC that can be missing.

SUBTASK 72-00-00-210-042-F00

(4) Examine the trailing edges as follow:

(a) Cracks or burns

1) There is no limit to the number of cracks or the amount of burns permitted.

(b) Buckled or bowed material

1) There is no limit.

(c) Missing material

1) The maximum quantity of missing material from each vane is 0.5 inch (12.7 mm) length in the axial direction.

2) The Continue-In-Service limit is 25 cycles with these conditions:

a) The missing material is not longer than 0.75 inch (19.05 mm) in the axial direction.

b) Make sure that the HPT blades must be in limits (AMM TASK 72-00-00-200-807-F00).

SUBTASK 72-00-00-210-043-F00

(5) Examine all airfoil surfaces as follow:

(a) Craze cracks

NOTE: Craze cracks look like many surface cracks that do not have visual width or depth.

1) There is no limit.

(b) Nicks, marks, scratches, and dents

1) There is no limit.

(c) Metal splatter

1) There is no limit.

BOEING PROPRIETARY - Copyright © Unpublished Work - See title page for details

SUBTASK 72-00-00-210-044-F00

(6) Examine the inner and outer platforms as follow:

(a) Cracks in the parent metal

1) There is no limit.

(b) Missing metal or burning of parent metal

1) There is no limit of missing metal or burning of parent metal with no through holes.

2) Do the inspection again after 400 cycle interval with these conditions:

a) The through hole is in or less than 1 inch (25.4mm) of the leading edge of the inner or outer platform.

b) The through hole is not more than 0.06 square inch (38.71 square mm).

c) No more than 4 segments for each engine have through holes on the inner or outer platform.

3) The Continue-In-Service limit is 25 cycles with this condition:

a) Through hole is not more than 0.12 square inch (77.42 square mm).

(c) Nicks, scores, scratches and dents on the platform surface

1) There is no limit.

(d) Bulges and bowing

1) There is no limit.

(e) Cracks in the braze joints of the airfoil-to-platform surfaces

1) There is no limit to the number with this condition:

a) Separation of the braze joint is not permitted, unless it was caused by burning.

D. Put the Airplane Back to Its Usual Condition

SUBTASK 72-00-00-420-008-F00

(1) Install the borescope plugs as follow:

(a) Lubricate the threads of the borescope plugs with pure nickel special compound, D50034 [CP2619], milk of magnesia compound, D50032 [CP1064] or graphite compound, D00601 [CP2101].

(b) Install the borescope plugs.

AKS ALL; AIRPLANES WITH SINGLE ANNULAR COMBUSTOR (SAC) ENGINES

1) Tighten each borescope plug to 57-63 pound-inches (6.4-7.1 Newton-meters).

AKS ALL

I 2) Install safety wire, G02345 [CP8001] or cable, G50065 [CP8006] on each borescope plug.

SUBTASK 72-00-00-420-009-F00

(2) If they were removed, do this task: Main Igniter Plug Installation, AMM TASK 74-21-02-400-801-F00.

BOEING PROPRIETARY - Copyright © Unpublished Work - See title page for details

DATE	TAIL NUMBER	STATION	AIRLINE CARD NO.	BOEING CARD NO.
				72-200-01-01

MECH	INSP

SUBTASK 72-00-00-860-083-F00

(3) If the borescope procedure is complete, do this task: Put the Airplane Back to Its Usual Condition, TASK 72-00-00-200-814-F00.

——— END OF TASK ———

BOEING PROPRIETARY - Copyright © Unpublished Work - See title page for details

TASK 72-00-00-200-814-F00

MECH	INSP

3. Put the Airplane Back to Its Usual Condition

A. General

(1) This task provides the instructions on how to put the airplane back to its usual condition after an inspection.

B. Put the Airplane Back to Its Usual Condition

SUBTASK 72-00-00-080-009-F00

CAUTION: MAKE SURE THERE ARE NO TOOLS, PARTS, OR OTHER UNWANTED MATERIAL IN THE INLET COWL. IF YOU DO NOT OBEY THESE INSTRUCTIONS, YOU CAN CAUSE DAMAGE TO THE ENGINE.

(1) Remove the protective mat, STD-585 from the inner surface of the inlet cowl.

SUBTASK 72-00-00-210-100-F00

(2) Disassemble the borescope equipment as follows:

(a) Turn the light source to OFF.

1) Keep the blower ON until the lamp and case are cool.

(b) Make sure that the power switch is OFF.

(c) Make sure that the light intensity control is set to minimum.

(d) Disconnect the power supply and the ground.

(e) Disconnect the extension and the viewer from the borescope.

(f) Disconnect the borescope from the fiber light cable.

(g) Disconnect the fiber light cable from the light source.

SUBTASK 72-00-00-210-101-F00

CAUTION: MAKE SURE THAT YOU INSTALL THE COVER ON THE GEARBOX. IF YOU DO NOT INSTALL THE COVER, ENGINE OIL LEAKS CAN OCCUR DURING OPERATION AND ENGINE DAMAGE CAN OCCUR.

(3) If not already done, do this task: Handcranking Drive Cover Installation, AMM TASK 72-63-01-400-801-F00.

SUBTASK 72-00-00-410-045-F00

WARNING: OBEY THE INSTRUCTIONS IN THE PROCEDURE TO CLOSE THE THRUST REVERSERS. IF YOU DO NOT OBEY THE INSTRUCTIONS, INJURIES TO PERSONS AND DAMAGE TO EQUIPMENT CAN OCCUR.

(4) Do these tasks in sequence to safely close the left and right thrust reversers:

(a) Do this task: Close the Thrust Reverser (Selection), AMM TASK 78-31-00-010-804-F00.

(b) Do this task: Close the Fan Cowl Panels, AMM TASK 71-11-02-410-801-F00.

(c) Do this task: Thrust Reverser Activation after Ground Maintenance, AMM TASK 78-31-00-440-803-F00.

BOEING PROPRIETARY - Copyright © Unpublished Work - See title page for details

DATE	TAIL NUMBER	STATION	AIRLINE CARD NO.	BOEING CARD NO.
				72-200-01-01

MECH	INSP

SUBTASK 72-00-00-860-078-F00

(5) For Engine 1, remove the safety tag and close this circuit breaker:

CAPT Electrical System Panel, P18-2

Row	Col	Number	Name
B	8	C01103	ENGINE 1 START VALVE

SUBTASK 72-00-00-860-079-F00

(6) For Engine 2, remove the safety tag and close this circuit breaker:

F/O Electrical System Panel, P6-2

Row	Col	Number	Name
C	4	C00154	ENGINE 2 START VALVE

SUBTASK 72-00-00-860-006-F00

(7) On the applicable engine, remove the DO-NOT-OPERATE tag from the start lever.

——— END OF TASK ———

BOEING PROPRIETARY - Copyright © Unpublished Work - See title page for details

DATE	TAIL NUMBER	STATION	AIRLINE CARD NO.	BOEING CARD NO.
				72-200-01-01

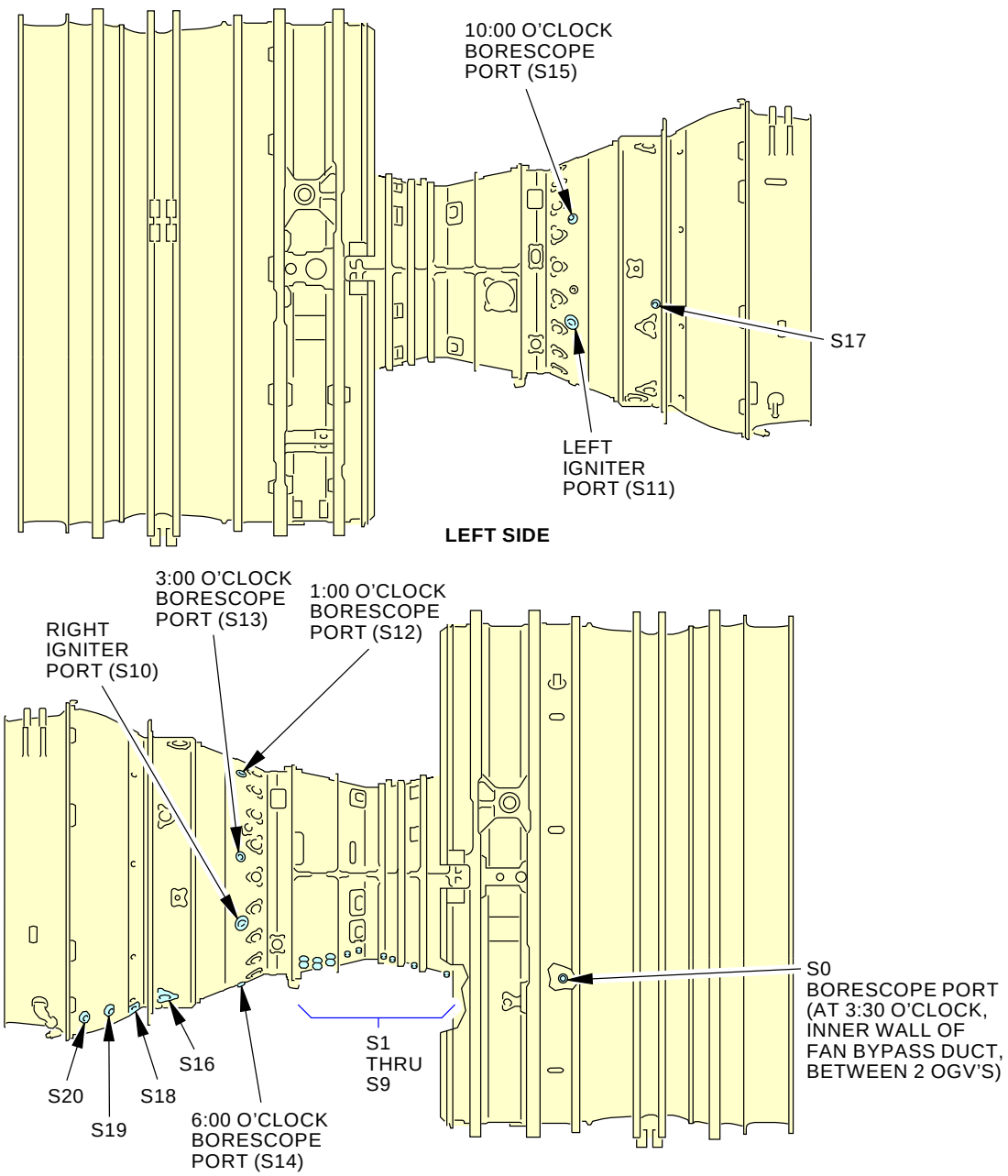

NOTE:

SOME ENGINE COMPONENTS
REMOVED FOR CLARITY.

S-M56-MM-03504-00-B
H50646 S0006582226_V2

Borescope Port Locations
Figure 1

BOEING PROPRIETARY - Copyright © Unpublished Work - See title page for details

DATE	TAIL NUMBER	STATION	AIRLINE CARD NO.	BOEING CARD NO.
				72-200-01-01

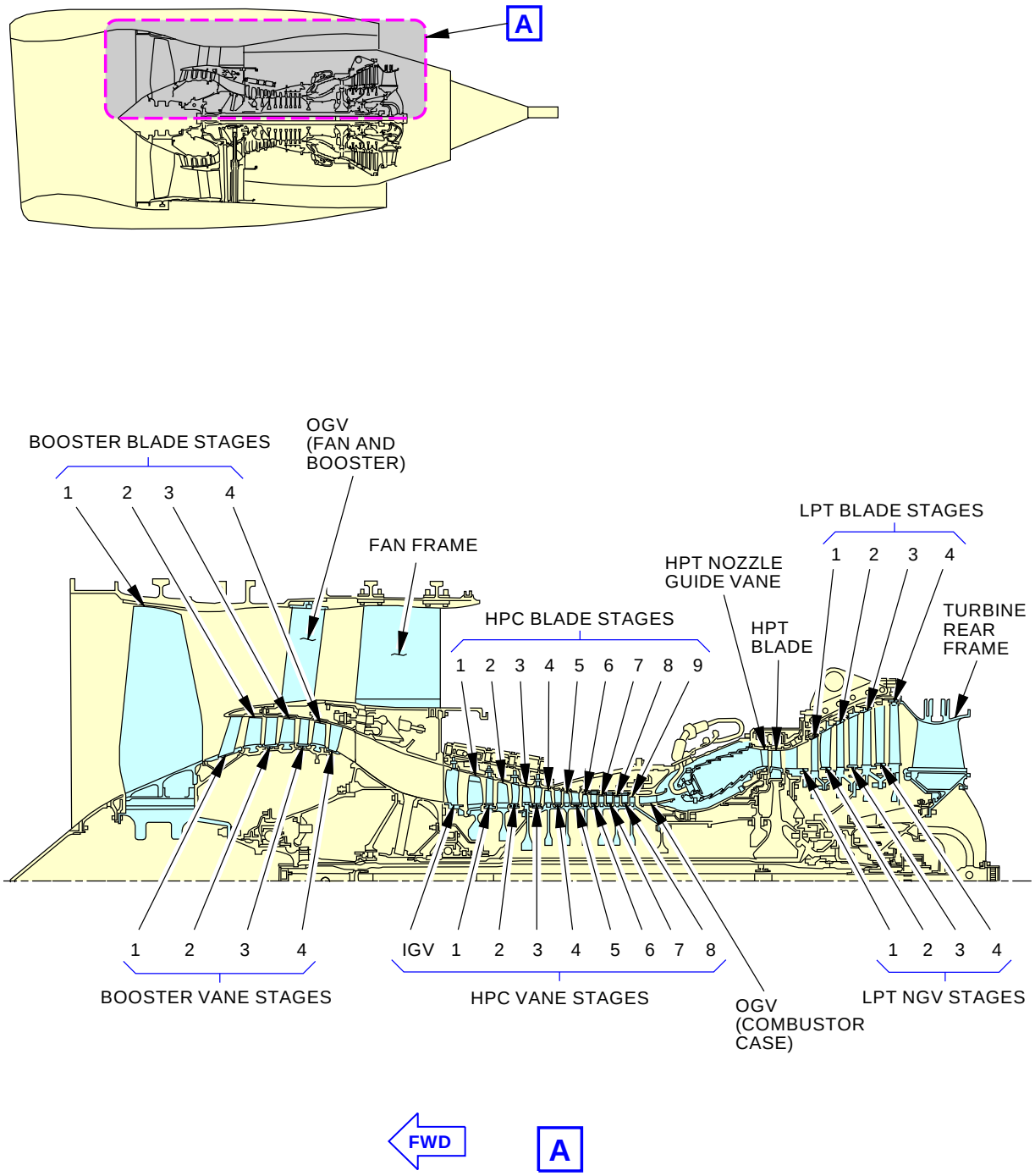

G47263 S0006582229_V3

Engine Airfoil Count
Figure 2 (Sheet 1 of 2)

BOEING PROPRIETARY - Copyright © Unpublished Work - See title page for details

NOMENCLATURE	STAGE	NUMBER OF BLADES
FAN AND BOOSTER	1	24
	2	74
	3	78
	4	74
HIGH PRESSURE COMPRESSOR (HPC)	1	38
	2	53
	3	60
	4	68
	5	75
	6	82
	7	82
	8	80
	9	76
HIGH PRESSURE TURBINE (HPT) NON-7BE ENGINE		80
HIGH PRESSURE TURBINE HPT 7BE ENGINE		76
LOW PRESSURE TURBINE (LPT) NON-7BE ENGINE	1	162
	2	150
	3	150
	4	134
LOW PRESSURE TURBINE LPT 7BE ENGINE	1	154
	2	134
	3	136
	4	138

G48151 S0006582230_V4

Engine Airfoil Count
Figure 2 (Sheet 2 of 2)

BOEING PROPRIETARY - Copyright © Unpublished Work - See title page for details

DATE	TAIL NUMBER	STATION	AIRLINE CARD NO.	BOEING CARD NO.
				72-200-01-01

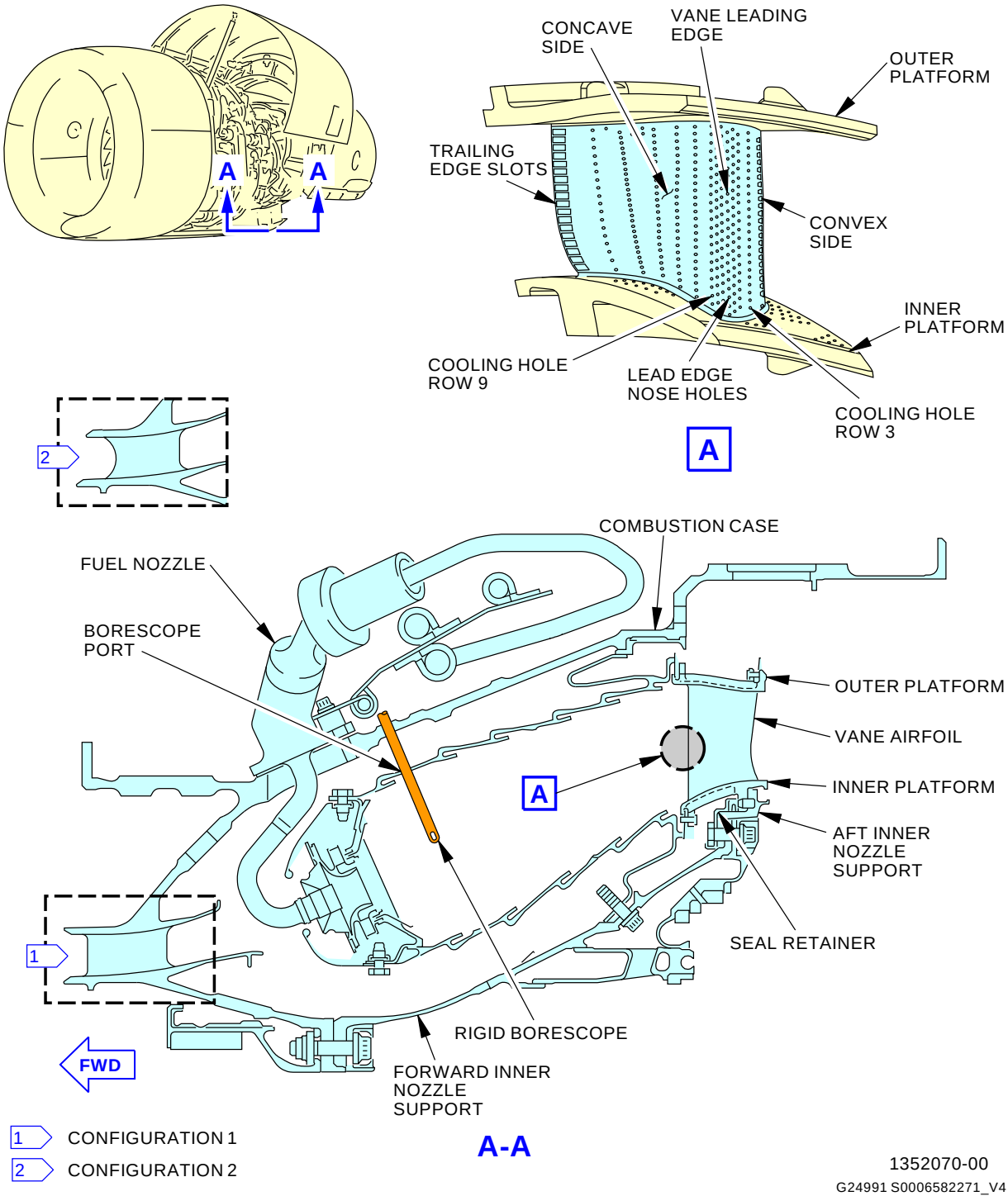

HPT Nozzle Guide Vanes Borescope Inspection
Figure 3

BOEING PROPRIETARY - Copyright © Unpublished Work - See title page for details

DATE	TAIL NUMBER	STATION	AIRLINE CARD NO.	BOEING CARD NO.
				72-200-01-01

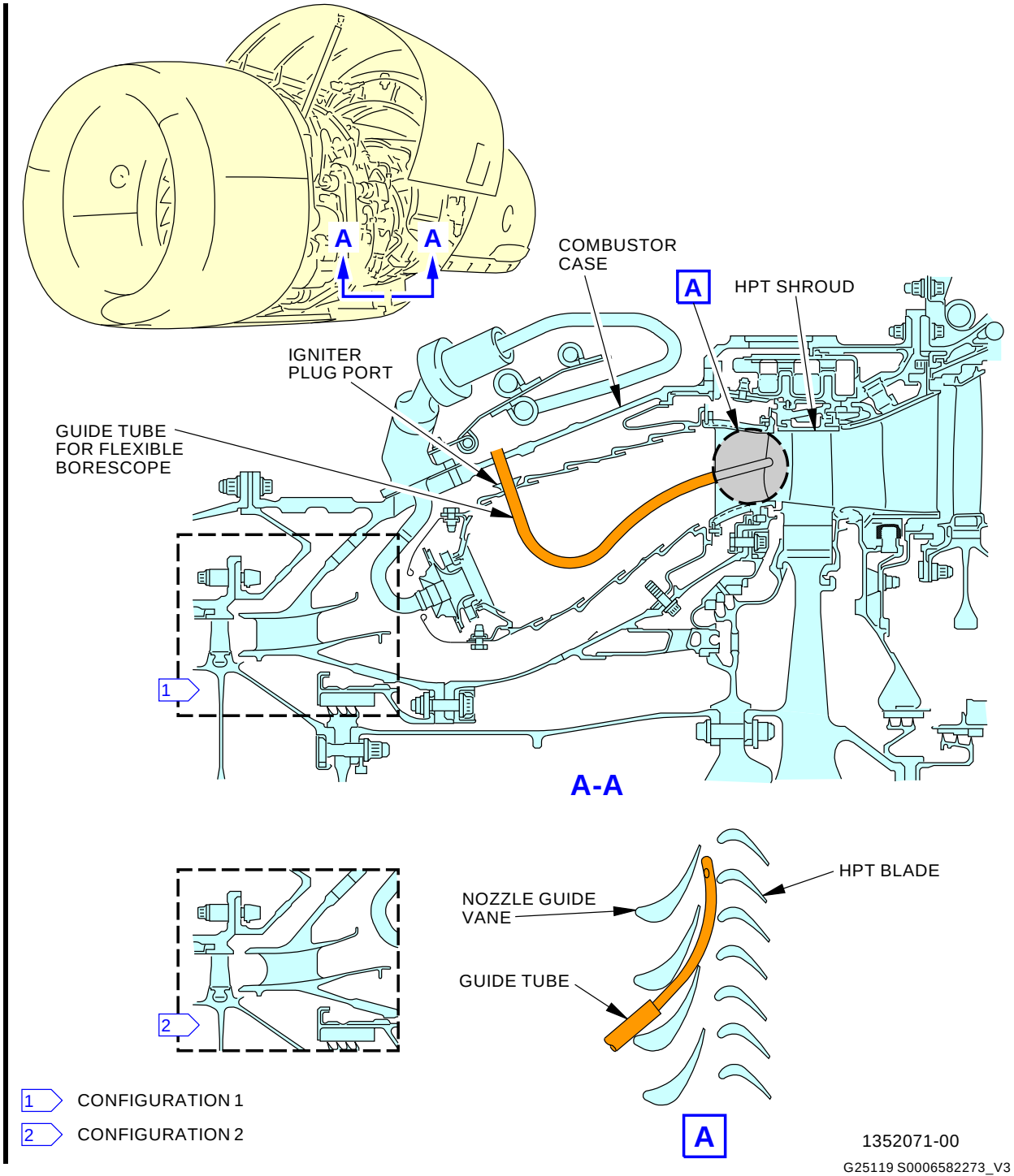

HPT Nozzle Guide Vanes (With Flexible) Borescope Inspection
Figure 4

BOEING PROPRIETARY - Copyright © Unpublished Work - See title page for details

DATE	TAIL NUMBER	STATION	AIRLINE CARD NO.	BOEING CARD NO.
				72-200-01-01

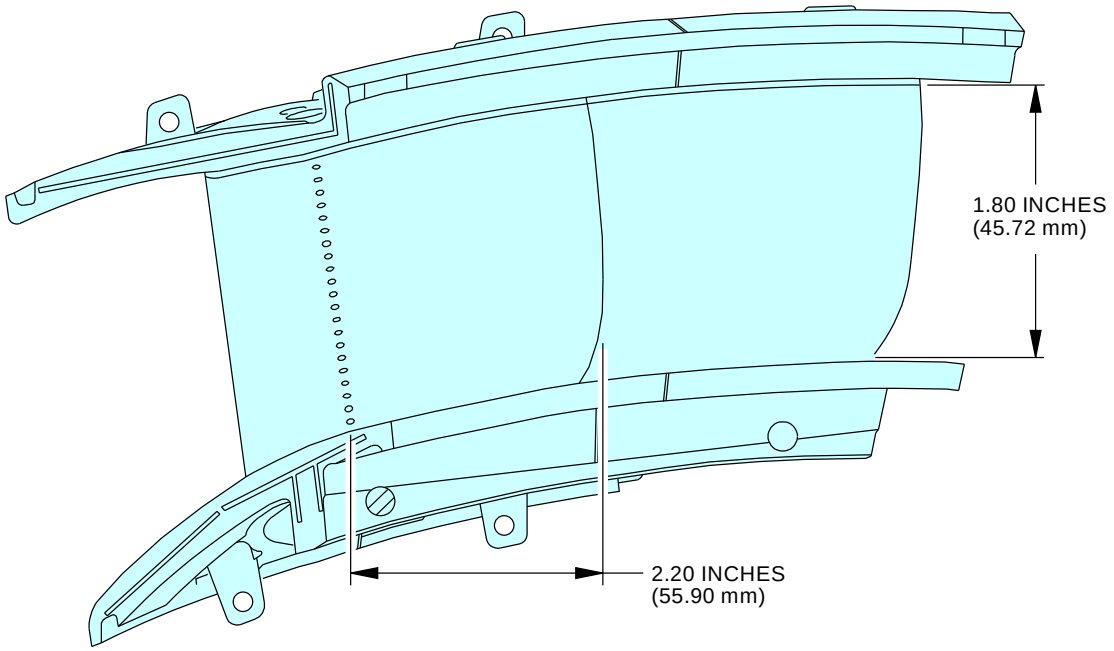

NOTE:

0.09 INCH (2.28 mm) IS THE DISTANCE
BETWEEN COOLING HOLE CENTERLINE.

1218758-00-A
374095 S0000132048_V2

HPT NGV Dimensional Inspection
Figure 5 (Sheet 1 of 3)

BOEING PROPRIETARY - Copyright © Unpublished Work - See title page for details

DATE	TAIL NUMBER	STATION	AIRLINE CARD NO.	BOEING CARD NO.
				72-200-01-01

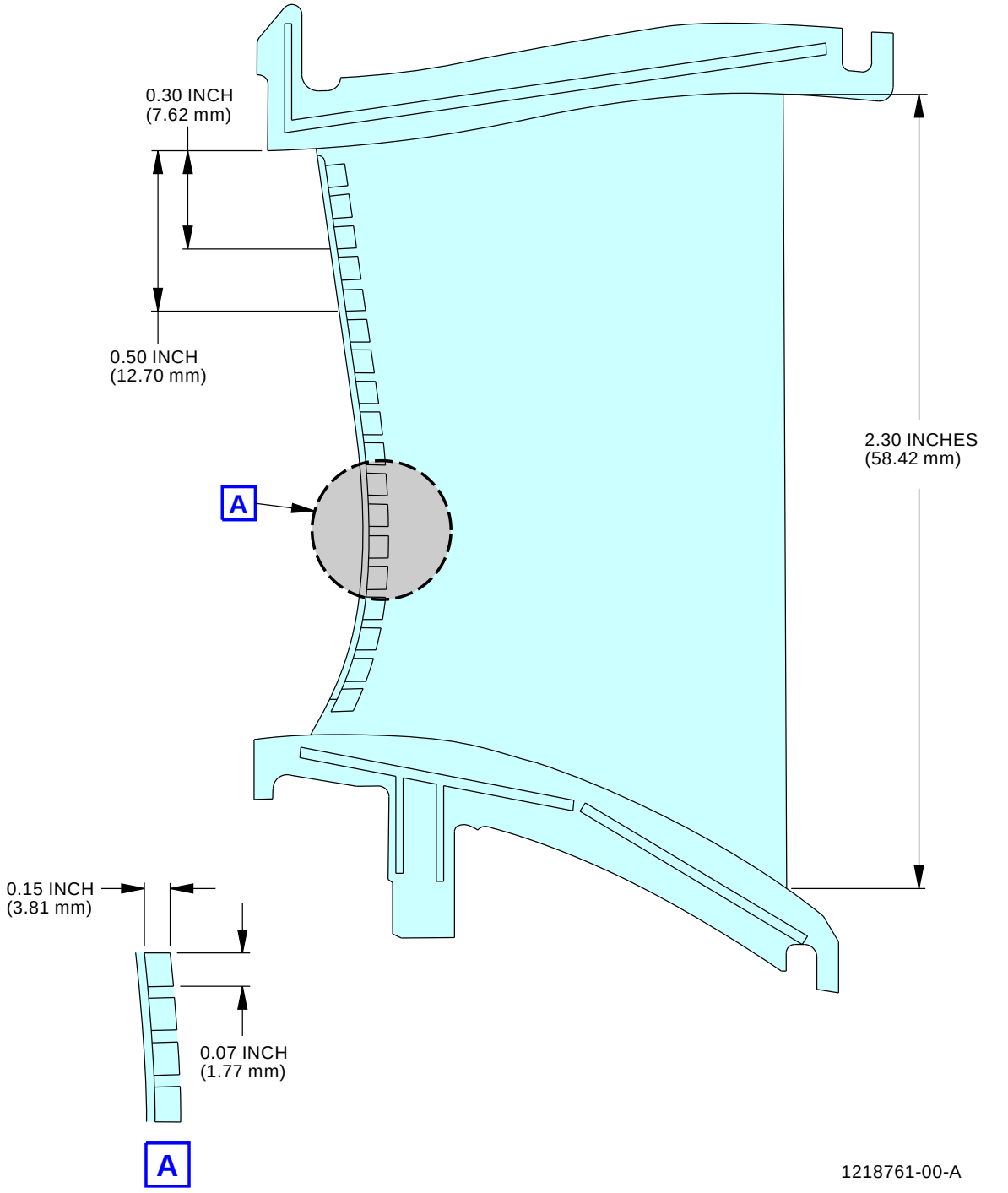

HPT NGV Dimensional Inspection
Figure 5 (Sheet 2 of 3)

BOEING PROPRIETARY - Copyright © Unpublished Work - See title page for details

DATE	TAIL NUMBER	STATION	AIRLINE CARD NO.	BOEING CARD NO.
				72-200-01-01

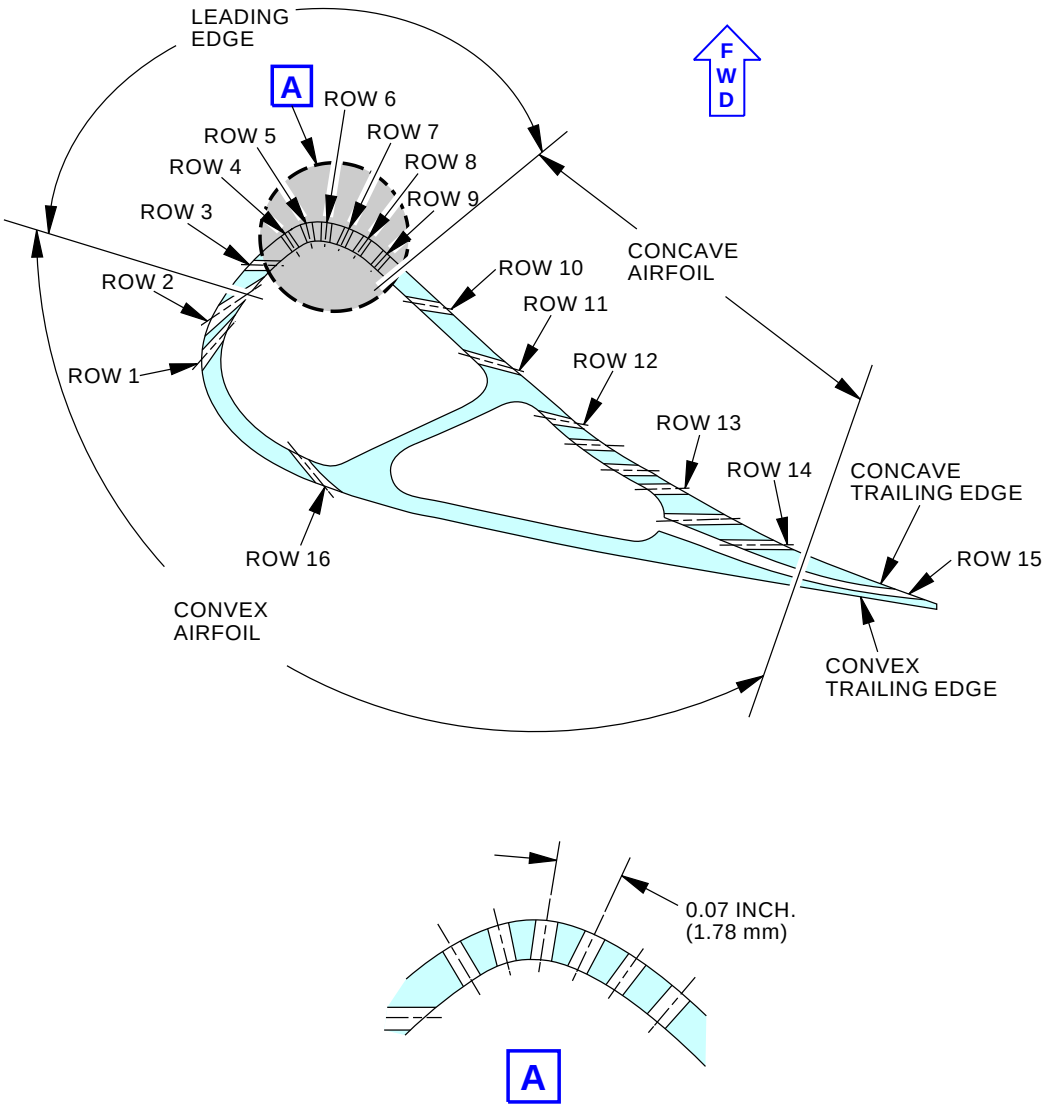

1295200-00
1987630 S0000386042_V2

HPT NGV Dimensional Inspection
Figure 5 (Sheet 3 of 3)

BOEING PROPRIETARY - Copyright © Unpublished Work - See title page for details

DATE	TAIL NUMBER	STATION	AIRLINE CARD NO.	BOEING CARD NO.
				72-200-01-01

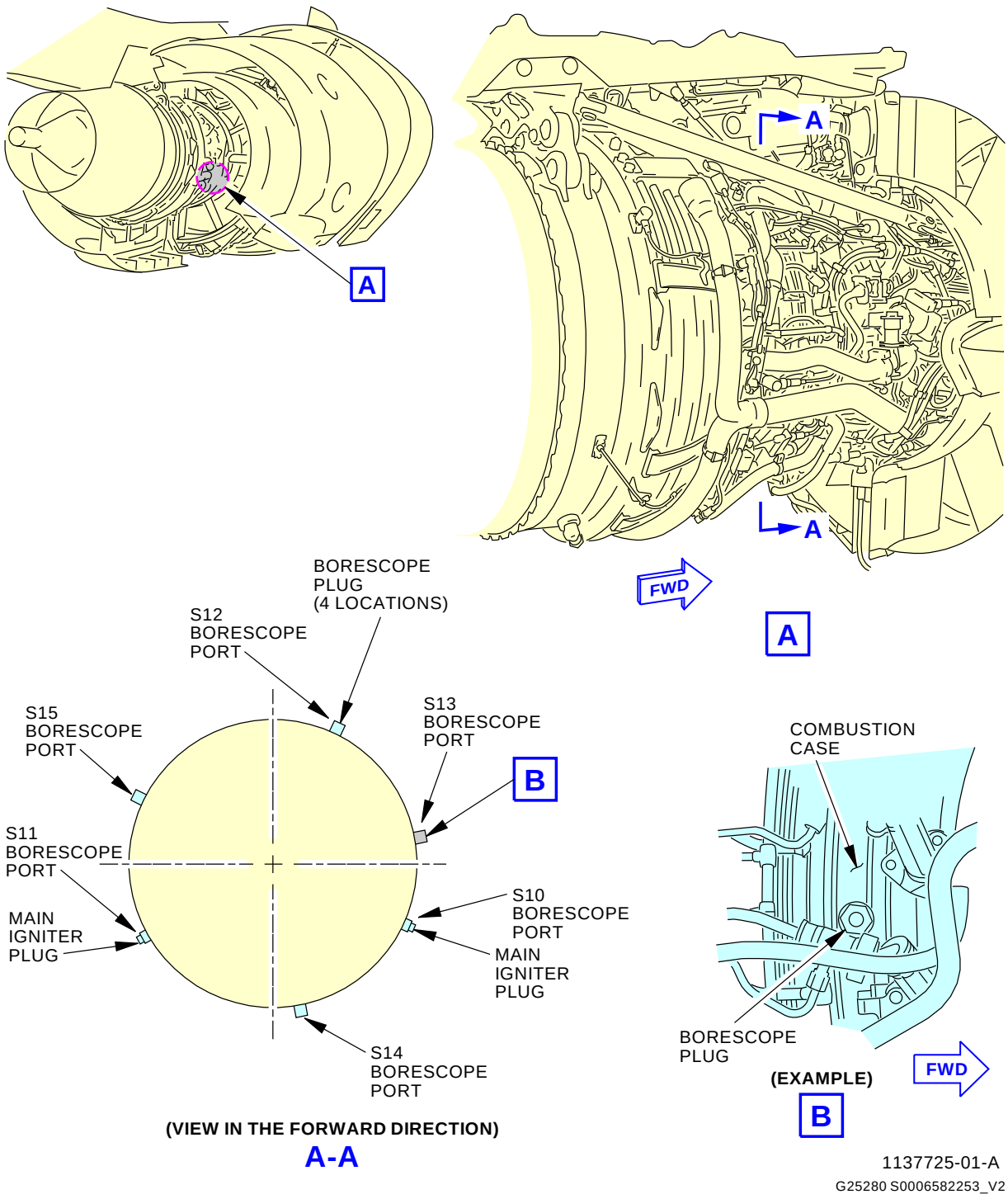

Combustion Chamber Borescope Port Locations
Figure 6

BOEING PROPRIETARY - Copyright © Unpublished Work - See title page for details

DATE	TAIL NUMBER	STATION	AIRLINE CARD NO.	BOEING CARD NO.
				72-200-01-01

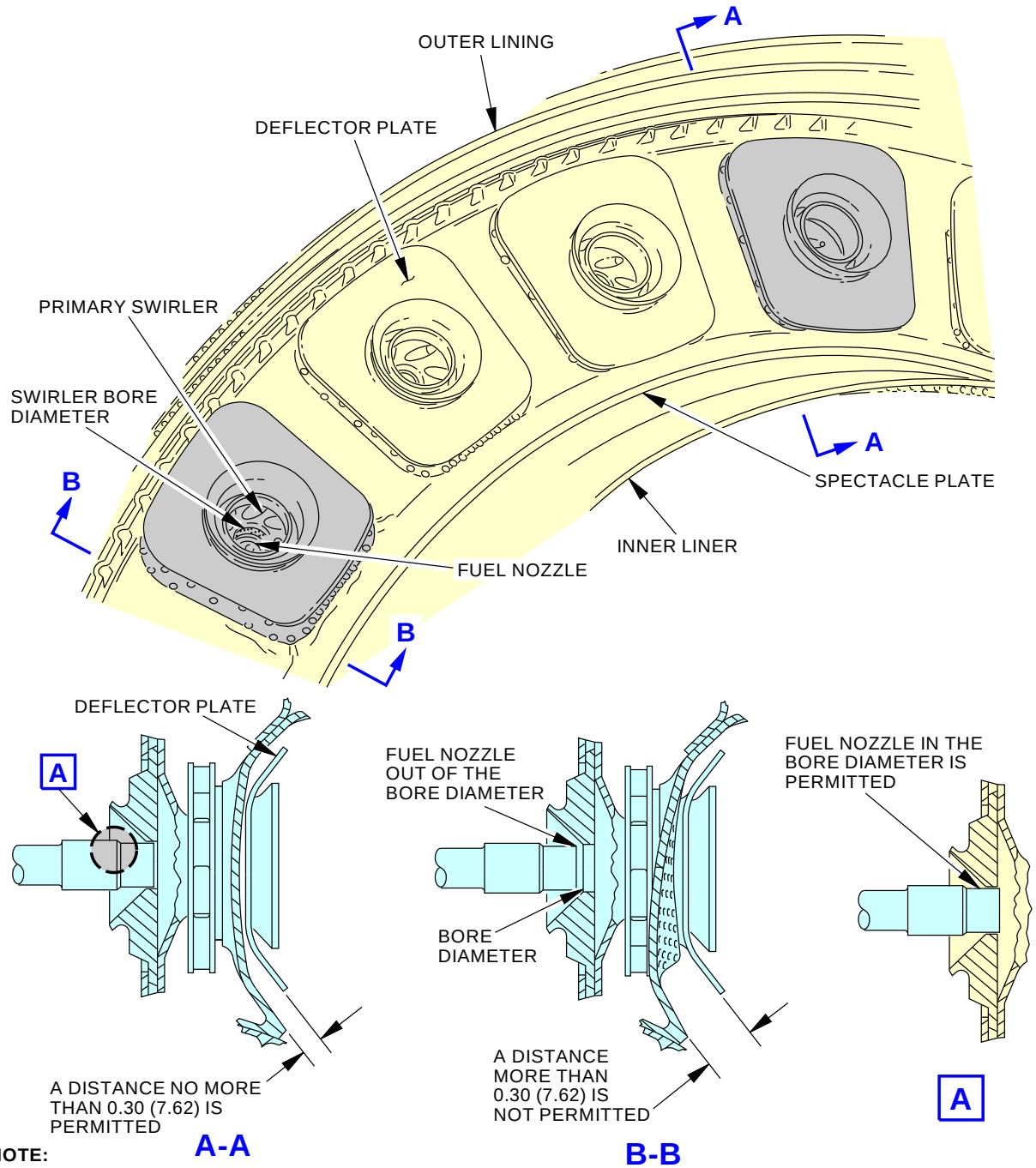

NOTE:

ALL DIMENSIONS ARE IN INCHES WITH MILLIMETERS IN PARENTHESES.

GMM-1096836-00-B
L35434 S0006582261_V2

After Bird Strike Combustion Section Borescope Inspection
Figure 7

BOEING PROPRIETARY - Copyright © Unpublished Work - See title page for details

AIRLINE CARD NO		TITLE			BOEING CARD NO.
		LEFT ENGINE HPT NOZZLE. (TECH INSERTION /3 AND 7BE ENGINES)			72-200-01-02
DATE	TASK				RELATED CARD
	INSPECTION - DETAILED				
TAIL NUMBER	WORK AREA	VERSION	THRESHOLD	REPEAT	APPLICABILITY
	LEFT ENGINE	1.1 1.2	6600 FC 15000 FH	1600 FC 4000 FH	AIRPLANE: ALL ENGINE: ALL
STATION	SKILL				
	ENGIN				
		ACCESS			ZONE
		415 416			411

Borescope inspection of the left engine HPT nozzle. (Tech Insertion /3 and 7BE engines)

A. References

Reference	Title
AMM 70-10-03-910-801-F00	Temporary Marking Procedures (P/B 201)
AMM 71-11-02-010-801-F00	Open the Fan Cowl Panels (P/B 201)
AMM 71-11-02-410-801-F00	Close the Fan Cowl Panels (P/B 201)
AMM 72-00-00-200-807-F00	HPT Blades Borescope Inspection (P/B 601)
AMM 72-00-00-980-802-F00	Find the Zero Index Mark on the N2 Rotor (P/B 201)
AMM 72-63-01-400-801-F00	Handcranking Drive Cover Installation (P/B 201)
AMM 74-21-02-000-801-F00	Main Igniter Plug Removal (P/B 401)
AMM 74-21-02-400-801-F00	Main Igniter Plug Installation (P/B 401)
AMM 78-31-00-010-801-F00	Open the Thrust Reverser (Selection) (P/B 201)
AMM 78-31-00-010-804-F00	Close the Thrust Reverser (Selection) (P/B 201)
AMM 78-31-00-040-802-F00	Thrust Reverser Deactivation For Ground Maintenance (P/B 201)
AMM 78-31-00-440-803-F00	Thrust Reverser Activation After Ground Maintenance (P/B 201)

B. Consumable Materials

Reference	Description	Specification
D00601 [CP2101]	High-temperature graphite compound	SAE AMS 2518
D50032 [CP1064]	Compound - Antiseize - Milk of Magnesia	
D50034 [CP2619]	Compound - Antiseize - Pure Nickel Special, Never - Seez	CFM CP2619
G01043	Cloth - Lint-free	
G02345 [CP8001]	Wire - Safety, 0.032 Inch (0.8 mm) Diameter	CFM CP8001, AMS 5687
G02481 [CP2801]	Marker - Temporary	
G50065 [CP8006]	Cable, Safety, Stainless Steel, 0.032 inch (0.813 mm) Diameter	M50 TF 9 CL-A

BOEING PROPRIETARY - Copyright © Unpublished Work - See title page for details

C. Tools/Equipment

NOTE: When more than one tool part number is listed under the same "Reference" number, the tools shown are alternates to each other within the same airplane series. Tool part numbers that are replaced or non-procurable are preceded by "Opt:", which stands for Optional.

Reference	Description
COM-2195	Set - Borescope Rigid, Olympus Part #: 856A1320P04 Supplier: 58828
COM-2196	Set - Borescope Fiber, 6 mm diameter Part #: 856A1321P05 Supplier: 58828 Part #: 856A1321P06 Supplier: 58828 Opt Part #: 856A1321P03 Supplier: 58828
COM-4302	Set - Borescope Rigid, Wolf Part #: 856A1320P05 Supplier: 58828
COM-4303	Set - Borescope Rigid, Lenox Part #: 856A1320P06 Supplier: 58828
COM-4304	Set - Borescope Rigid, ITI USA Part #: 856A1320P07 Supplier: 58828
SPL-2197	Light Source - Borescope, Lenox (150W) Part #: 856A1322P02 Supplier: 58828
SPL-2198	Kit - Borescope Guide, HP Turbine, CFM56 Engines Part #: 856A1310G01 Supplier: 58828
SPL-2207	Guide Tube - Borescope, HPT Shroud, CFM56 Engines Part #: 856A1351P01 Supplier: 58828
SPL-4305	Light Source - Borescope, Olympus (150W) Part #: 856A1322P03 Supplier: 58828
SPL-4306	Light Source - Borescope, Wolf (300W) Part #: 856A1322P04 Supplier: 58828
SPL-4307	Light Source - Borescope, Machida Part #: 856A1322P07 Supplier: 58828
SPL-4308	Light Source - Borescope, ITI USA (150W) Part #: 856A1322P08 Supplier: 58828
STD-10711	Shop Vacuum (400Hz if using aircraft power)
STD-585	Mat - Protective, 3/8 Inch (9.5 mm) Minimum Thickness, Minimum 42x60 Inches (1x1.5 meters) with Warning Streamers

BOEING PROPRIETARY - Copyright © Unpublished Work - See title page for details

TASK 72-00-00-200-802-F00

1. Borescope Inspection Preparation

(Figure 1 and Figure 2)

A. General

(1) This task provides the instructions on how to prepare for the borescope inspection.

B. Borescope Inspection Preparation

SUBTASK 72-00-00-860-001-F00

(1) For the applicable engine, install a DO-NOT-OPERATE tag on the start lever.

SUBTASK 72-00-00-860-080-F00

(2) For Engine 1, open this circuit breaker and install a safety tag:

CAPT Electrical System Panel, P18-2

Row	Col	Number	Name
B	8	C01103	ENGINE 1 START VALVE

SUBTASK 72-00-00-860-081-F00

(3) For Engine 2, open this circuit breaker and install a safety tag:

F/O Electrical System Panel, P6-2

Row	Col	Number	Name
C	4	C00154	ENGINE 2 START VALVE

SUBTASK 72-00-00-860-082-F00

(4) Do these tasks in sequence to safely open the left and right thrust reversers on the applicable engine:

WARNING: DO THE DEACTIVATION PROCEDURE FOR THE THRUST REVERSER TO PREVENT THE OPERATION OF THE THRUST REVERSER. ACCIDENTAL OPERATION OF THE THRUST REVERSER CAN CAUSE INJURIES TO PERSONS OR DAMAGE TO EQUIPMENT.

(a) Do this task: Thrust Reverser Deactivation for Ground Maintenance, AMM TASK 78-31-00-040-802-F00.

(b) Open the left and right fan cowl panels (AMM TASK 71-11-02-010-801-F00).

WARNING: OBEY THE INSTRUCTIONS IN THE PROCEDURE TO OPEN THE THRUST REVERSERS. IF YOU DO NOT OBEY THE INSTRUCTIONS, INJURIES TO PERSONS AND DAMAGE TO EQUIPMENT CAN OCCUR.

(c) Open the left and right thrust reversers (AMM TASK 78-31-00-010-801-F00).

BOEING PROPRIETARY - Copyright © Unpublished Work - See title page for details

SUBTASK 72-00-00-480-001-F00

(5) Refer to the applicable steps and borescope equipment to prepare for the inspection:

NOTE: For this procedure, borescope equipment is used for all inspections but not for the axial preload check of the Stage 4 LPT blades.

NOTE: Refer to the CFM Illustrated Tool and Equipment manual for the current part number for all the borescope equipment.

NOTE: Alternative borescope equipment that is as good or better than the CFM Borescope Specification is permitted for use. Refer to the CFM Non-Destructive Test Manual (CFM-TP-NT.11), Borescope Inspection, Part 7, for requirements.

CAUTION: MAKE SURE THAT THE POWER SWITCH IS IN THE OFF POSITION AND THE LIGHT INTENSITY CONTROL IS SET AT MINIMUM BEFORE YOU CONNECT THE LIGHT SOURCE TO THE POWER SUPPLY. MAKE SURE THE LIGHT SOURCE AND THE POWER SUPPLY ARE CORRECTLY ATTACHED TO A GROUND. DAMAGE TO THE EQUIPMENT CAN OCCUR.

(a) Connect the applicable light source to a power source that is grounded.

(b) You will use these borescope tools to do a complete borescope inspection of the engine:

NOTE: For more data on the use of this borescope equipment, refer to CFM NDTM 72-00-00, Part 7.

It is not recommended to do a borescope inspection at temperatures more than 150 degrees F (65.6 degrees C). You can do a dry motor to increase the engine cool down rate.

1) The applicable borescope and light source
   a) Rigid Borescope, COM-2195 and light source, SPL-4305
   b) Rigid Borescope, COM-4302 and light source, SPL-4306
   c) Rigid Borescope, COM-4303 and light source, SPL-2197
   d) Rigid Borescope, COM-4304 and light source, SPL-4308
   e) alternative light source, SPL-4307
2) The monitor, MSE-64
3) The fiber borescope, COM-2196 to do the inspection of these areas:
   a) The combustion chamber
   b) The HPT nozzle guide vanes
   c) The HPT blades.
4) The borescope guide kit, SPL-2198 and the borescope guide tube, SPL-2207 to do the inspection of these areas:
   a) The HPT nozzle guide vanes
   b) The HPT blades.

BOEING PROPRIETARY - Copyright © Unpublished Work - See title page for details

SUBTASK 72-00-00-210-001-F00

(6) If it is necessary to index the N2 rotor, do this task: Find the Zero Index Mark on the N2 Rotor, AMM TASK 72-00-00-980-802-F00.

NOTE: It is recommended that you stop the N2 rotor when you put each blade in position for inspection. This will permit you to do a full inspection of each blade.

SUBTASK 72-00-00-210-002-F00

(7) If it is necessary to turn or index the N1 rotor, do these steps:

(a) Put a protective mat, STD-585 in the inlet cowl.

(b) Find the number one fan blade.

NOTE: The fan blade 1 is adjacent to a machined dimple in the aft area of the rear spinner cone.

(c) Use a marker, G02481 [CP2801] to make a mark to identify the number one fan blade (AMM TASK 70-10-03-910-801-F00).

(d) Align the leading edge of the number one fan blade with the T12 temperature sensor.

NOTE: The T12 temperature sensor is approximately at the 10:30 o'clock position as you look in the inlet cowl.

SUBTASK 72-00-00-210-129-F00

(8) Do a general visual inspection of the primary plug assembly for oil puddling.

NOTE: An oil puddle in the exhaust system can occur after the engine is dry or wet motored (refer to task 71–71–00–200–801–F00).

SUBTASK 72-00-00-100-016-F00

(9) If oil puddling is found, remove the oil from the primary plug:

(a) Clean oil from the surface with a lint-free cloth, G01043. A vacuum, STD-10711 can be used to remove unwanted oil.

——— END OF TASK ———

BOEING PROPRIETARY - Copyright © Unpublished Work - See title page for details

TASK 72-00-00-200-818-F00

MECH	INSP

2. HPT Nozzle Guide Vanes Borescope Inspection (Tech Insertion (/3) and CFM56-7BE Engines)
(Figure 3, Figure 4 and Figure 5)

A. General

(1) This task provides the steps on how to do the borescope inspection of the HPT nozzle guide vanes for Tech Insertion (/3) and CFM56-7BE engines.

B. Prepare for the Inspection

SUBTASK 72-00-00-840-030-F00

(1) If not already done, do this task: Borescope Inspection Preparation, TASK 72-00-00-200-802-F00.

SUBTASK 72-00-00-210-123-F00

(2) Make sure that you verify the version of the CFM56 engine on the data placard.

NOTE: The newest version of the CFM56-7B series engine is the CFM56-7BEXX engine. The “XX” in CFM56-7BXX/3 is the thrust rating of the engine. This information is found on the engine data placard on the engine fan case.

NOTE: A Tech Insertion (TI) engine has a “/3” after the thrust rating on the engine data plate. An example of a Singular Annular Combustor (SAC) Engine with TI is CFM56-7B22/3. An example of a non-TI engine is CFM56-7B22. The “XX” in CFM56-7BXX/3 is the thrust rating of the engine. This information is found on the engine data placard on the engine fan case.

SUBTASK 72-00-00-010-040-F00

(3) Remove the S13 and S15 borescope plugs (Figure 6 and Figure 7).

NOTE: To do an initial inspection, it is only necessary to remove the S13 and S15 borescope plugs. If you find damage, you must remove the main igniter plugs and the other borescope plugs to do a complete inspection.

SUBTASK 72-00-00-020-012-F00

(4) If you find damage from the initial inspection, do these steps to remove the main igniter plugs and the other borescope plugs:

NOTE: The port for the 4:00 o'clock main igniter plug is referred to as the S10 borescope port. The port for the 8:00 o'clock main igniter plug is referred to as the S11 borescope port.

(a) Do this task: Main Igniter Plug Removal, AMM TASK 74-21-02-000-801-F00.

(b) Remove the S12 and S14 borescope plugs.

SUBTASK 72-00-00-840-031-F00

(5) Do these steps to prepare for the inspection of the HPT nozzle (Figure 3, Figure 4):

(a) Connect the applicable borescope to the light source.

1) Rigid Borescope, COM-2195 and light source, SPL-4305
2) Rigid Borescope, COM-4302 and light source, SPL-4306
3) Rigid Borescope, COM-4303 and light source, SPL-2197
4) Rigid Borescope, COM-4304 and light source, SPL-4308

BOEING PROPRIETARY - Copyright © Unpublished Work - See title page for details

5) Use the rigid borescope with the black band.

(b) Put the rigid borescope through the borescope port.

(c) Turn the light source ON.

SUBTASK 72-00-00-480-034-F00

(6) If a complete inspection of the nozzle convex side is necessary, do the steps that follow (Figure 3, Figure 4):

NOTE: This inspection is only necessary if you find an indication of damage on the convex side during the initial or complete inspection with the rigid probes.

(a) Connect the borescope, COM-2196 to the applicable light source.

(b) Put the borescope guide kit, SPL-2198 or borescope guide tube, SPL-2207 into the borescope port.

1) Use the borescope guide kit, SPL-2198 to do the inspection of the leading edge and the concave surfaces.

2) Use the borescope guide tube, SPL-2207 to do the inspection of the convex surfaces.

(c) Put the fiberscope through the guide tube.

(d) Make sure that you adjust the borescope correctly.

(e) Turn the lightsource ON.

C. HPT Nozzle Guide Vanes Borescope Inspection

SUBTASK 72-00-00-220-008-F00

(1) Examine the leading edges of the 42 HPT nozzle guide vanes as follow:

NOTE: To estimate the size of distress, use the applicable visual aid. To find distress locations relative to specific rows, refer to the applicable figure.

NOTE: The airfoil baffle is visible inside the airfoil when missing material occurs. It is sheet metal with cooling holes.

(a) Cracks that connect nose holes

1) There is no limit to the number with these conditions:

a) The cracks are not longer than 0.3 inch (7.60 mm).

b) There is no missing material.

2) Do the inspection again after each 800 cycle interval with these conditions:

a) The cracks are not longer than 0.3 inch (7.60 mm).

b) The total area of missing material is not more than 0.25 square inch (161 square mm) per vane. Maximum of 4 vanes per 90° arc.

c) Missing material does not extend aft of rows 3 or 9.

3) Do the inspection again after each 400 cycle interval with these conditions:

a) The cracks are not more than 1 inch (25.4 mm) in length.

b) The total area of missing material is not more than 0.25 square inch (161 square mm) per vane. Maximum of 4 vanes per 90° arc.

c) Missing material does not extend aft of rows 3 or 9.

BOEING PROPRIETARY - Copyright © Unpublished Work - See title page for details

MECH	INSP

4) The Continue-In-Service limit is 25 cycles with this condition:
   a) The area of missing material is not more than 0.3 square inch (193 square mm) per vane. Maximum of 4 vanes per 90° arc.

(b) Other cracks
   1) There is no limit to the number with these conditions:
      a) The cracks are not longer than 0.5 inch (12.7 mm).
      b) There is no missing material.
   2) Do the inspection again after each 800 cycle interval with these conditions:
      a) The cracks are not longer than 0.5 inch (12.7 mm).
      b) The total area of missing material is not more than 0.25 square inch (161 square mm) per vane. Maximum of 4 vanes per 90° arc.
      c) Missing material does not extend aft of rows 3 or 9.
   3) Do the inspection again after each 400 cycle interval with these conditions:
      a) The cracks are not more than 1 inch (25.4 mm) in length.
      b) The total area of missing material is not more than 0.25 square inch (161 square mm) per vane. Maximum of 4 vanes per 90° arc.
      c) Missing material does not extend aft of rows 3 or 9.
   4) The Continue-In-Service limit is 25 cycles with this condition:
      a) The area of missing material is not more than 0.3 square inch (193 square mm) per vane. Maximum of 4 vanes per 90° arc.

(c) Burns or spalled areas
   1) There is no limit to the number with this condition:
      a) The area of missing material is not more than 0.15 square inch (97 square mm) per vane. Maximum of 4 vanes per 90° arc.
   2) Do the inspection again after each 800 cycle interval with these conditions:
      a) The total area of missing material is not more than 0.25 square inch (161 square mm) per vane. Maximum of 4 vanes per 90° arc.
      b) Missing material does not extend aft of rows 3 or 9.
   3) The Continue-In-Service limit is 25 cycles with this condition:
      a) The area of missing material is not more than 0.3 square inch (193 square mm) per vane. Maximum of 4 vanes per 90° arc.

(d) Baffle missing material
   1) Not Permitted
   2) The Continue-In-Service limit is 25 cycles with this condition:
      a) The area of missing material is equivalent to a rectangle defined by 4 adjacent holes.

SUBTASK 72-00-00-220-009-F00

(2) Examine the concave surfaces as follow:
   (a) Radial cracks that extend from the gill holes

BOEING PROPRIETARY - Copyright © Unpublished Work - See title page for details

MECH	INSP

1) Permitted if there is no missing material.
2) Do the inspection again after each 400 cycle interval with these conditions:
   a) The missing material, cause by cracks, is not more than 0.04 square inch (25.81 square mm).
   b) No more than 4 airfoils for each engine have missing material caused by cracks.
3) The Continue-In-Service limit is 25 cycles with this condition:
   a) The missing material caused by cracks is not larger than 0.45 square inch (290 square mm).

(b) Other cracks (not in the gill hole rows)
1) Permitted if there is no missing material.
2) Do the inspection again after each 400 cycle interval with these conditions:
   a) The missing material, cause by cracks, is not more than 0.04 square inch (25.81 square mm).
   b) No more than 4 airfoils for each engine have missing material caused by cracks.
3) The Continue-In-Service limit is 25 cycles with this condition:
   a) The missing material, caused by cracks, is not more than 0.45 square inch (290 square mm).

(c) Burns
1) There is no limit to the quantity with this condition:
   a) There is no burn-through into the inner cooling passages.
2) The Continue-In-Service limit is 25 cycles with this condition:
   a) The area which is burned through is not larger than 0.45 square inch (290 square mm) on each vane.

(d) Missing thermal barrier coating (TBC)
1) There is no limit to the quantity of TBC that can be missing.

SUBTASK 72-00-00-220-010-F00

(3) Examine the convex surfaces as follow:

NOTE: To find distress location relative to specific rows, refer to the applicable figure.

(a) Radial or axial cracks
1) Permitted if there is no missing material.
2) If there is missing material, do the inspection again after each 800 cycle interval with these conditions:
   a) The total area of missing material is not more than 0.05 square inch (39.1 square mm) per vane. Maximum of 4 vanes per 90° arc.
   b) Cracking does not occur aft of cooling hole row 16.
3) The Continue-In-Service limit is 25 cycles with this condition:

BOEING PROPRIETARY - Copyright © Unpublished Work - See title page for details

a) The missing material caused by cracks is not larger than 0.45 square inch (290 square mm).

(b) Burns or bulges

NOTE: An open area of the cavity caused by bulging is to be interpreted as missing material where the limits that follow apply.

1) Permitted if there is no missing material.

2) If there is missing material, do the inspection again after each 800 cycle interval with these conditions:

a) The total area of missing material is not more than 0.05 square inch (39.1 square mm) per vane. Maximum of 4 vanes per 90° arc.

b) Bulging does not occur aft of cooling hole row 16.

3) The Continue-In-Service limit is 25 cycles with this condition:

a) The missing material caused by cracks is not larger than 0.45 square inch (290 square mm).

(c) Missing thermal barrier coating (TBC)

1) Permitted

SUBTASK 72-00-00-220-011-F00

(4) Examine the trailing edges as follow:

(a) Cracks or burns

1) Permitted

(b) Buckled or bowed material

1) Permitted

(c) Missing material

1) The maximum quantity of missing material from each vane is 0.5 inches (12.7 mm) length in the axial direction.

2) The Continue-In-Service limit is 25 cycles with these conditions:

a) The missing material is not longer than 0.75 inches (19.05 mm) in the axial direction.

b) Make sure that the HPT blades must be in limits (AMM TASK 72-00-00-200-807-F00).

SUBTASK 72-00-00-211-002-F00

(5) Examine all airfoil surfaces as follow:

(a) Craze cracks

NOTE: Craze cracks look like many surface cracks that do not have visual width or depth.

1) Permitted.

(b) Nicks, marks, scratches, and dents

1) Permitted.

(c) Metal splatter

BOEING PROPRIETARY - Copyright © Unpublished Work - See title page for details

MECH	INSP

1) Permitted.

SUBTASK 72-00-00-211-003-F00

(6) Examine the inner and outer platforms as follow:

(a) Cracks in the parent metal

1) Permitted.

(b) Missing metal or burning of parent metal

1) There is no limit of missing metal or burning of parent metal with no through holes.

2) Do the inspection again after 400 cycle interval with these conditions:

a) The through hole is in or less than 1 inch (25.4mm) of the leading edge of the inner or outer platform.

b) The through hole is not more than 0.06 square inch (38.71 square mm).

c) No more than 4 segments for each engine have through holes on the inner or outer platform.

3) The Continue-In-Service limit is 25 cycles with this condition:

a) Through hole is not more than 0.12 square inch (77.42 square mm).

(c) Nicks, scores, scratches and dents on the platform surface

1) Permitted.

(d) Bulges and bowing

1) Permitted.

(e) Cracks in the braze joints of the airfoil-to-platform surfaces

1) Permitted with this condition:

a) Separation of the braze joint is not permitted, unless it was caused by burning.

D. Put the Airplane Back to Its Usual Condition

SUBTASK 72-00-00-410-034-F00

(1) Do these steps to install the borescope plugs:

(a) Lubricate the threads of the borescope plugs with pure nickel special compound, D50034 [CP2619], milk of magnesia compound, D50032 [CP1064] or graphite compound, D00601 [CP2101].

(b) Install the borescope plugs.

1) Tighten each borescope plug to 57-63 pound-inches (6.4-7.1 Newton-meters).

2) Install safety wire, G02345 [CP8001] or cable, G50065 [CP8006] on each borescope plug.

SUBTASK 72-00-00-410-035-F00

(2) If they were removed, do this task: Main Igniter Plug Installation, AMM TASK 74-21-02-400-801-F00.

BOEING PROPRIETARY - Copyright © Unpublished Work - See title page for details

DATE	TAIL NUMBER	STATION	AIRLINE CARD NO.	BOEING CARD NO.
				72-200-01-02

MECH	INSP

SUBTASK 72-00-00-840-032-F00

(3) If the borescope procedure is complete, do this task: Put the Airplane Back to Its Usual Condition, TASK 72-00-00-200-814-F00.

——— END OF TASK ———

BOEING PROPRIETARY - Copyright © Unpublished Work - See title page for details

TASK 72-00-00-200-814-F00

MECH	INSP

3. Put the Airplane Back to Its Usual Condition

A. General

(1) This task provides the instructions on how to put the airplane back to its usual condition after an inspection.

B. Put the Airplane Back to Its Usual Condition

SUBTASK 72-00-00-080-009-F00

CAUTION: MAKE SURE THERE ARE NO TOOLS, PARTS, OR OTHER UNWANTED MATERIAL IN THE INLET COWL. IF YOU DO NOT OBEY THESE INSTRUCTIONS, YOU CAN CAUSE DAMAGE TO THE ENGINE.

(1) Remove the protective mat, STD-585 from the inner surface of the inlet cowl.

SUBTASK 72-00-00-210-100-F00

(2) Disassemble the borescope equipment as follows:

(a) Turn the light source to OFF.

1) Keep the blower ON until the lamp and case are cool.

(b) Make sure that the power switch is OFF.

(c) Make sure that the light intensity control is set to minimum.

(d) Disconnect the power supply and the ground.

(e) Disconnect the extension and the viewer from the borescope.

(f) Disconnect the borescope from the fiber light cable.

(g) Disconnect the fiber light cable from the light source.

SUBTASK 72-00-00-210-101-F00

CAUTION: MAKE SURE THAT YOU INSTALL THE COVER ON THE GEARBOX. IF YOU DO NOT INSTALL THE COVER, ENGINE OIL LEAKS CAN OCCUR DURING OPERATION AND ENGINE DAMAGE CAN OCCUR.

(3) If not already done, do this task: Handcranking Drive Cover Installation, AMM TASK 72-63-01-400-801-F00.

SUBTASK 72-00-00-410-045-F00

WARNING: OBEY THE INSTRUCTIONS IN THE PROCEDURE TO CLOSE THE THRUST REVERSERS. IF YOU DO NOT OBEY THE INSTRUCTIONS, INJURIES TO PERSONS AND DAMAGE TO EQUIPMENT CAN OCCUR.

(4) Do these tasks in sequence to safely close the left and right thrust reversers:

(a) Do this task: Close the Thrust Reverser (Selection), AMM TASK 78-31-00-010-804-F00.

(b) Do this task: Close the Fan Cowl Panels, AMM TASK 71-11-02-410-801-F00.

(c) Do this task: Thrust Reverser Activation after Ground Maintenance, AMM TASK 78-31-00-440-803-F00.

BOEING PROPRIETARY - Copyright © Unpublished Work - See title page for details

DATE	TAIL NUMBER	STATION	AIRLINE CARD NO.	BOEING CARD NO.
				72-200-01-02

MECH	INSP

SUBTASK 72-00-00-860-078-F00

(5) For Engine 1, remove the safety tag and close this circuit breaker:

CAPT Electrical System Panel, P18-2

Row	Col	Number	Name
B	8	C01103	ENGINE 1 START VALVE

SUBTASK 72-00-00-860-079-F00

(6) For Engine 2, remove the safety tag and close this circuit breaker:

F/O Electrical System Panel, P6-2

Row	Col	Number	Name
C	4	C00154	ENGINE 2 START VALVE

SUBTASK 72-00-00-860-006-F00

(7) On the applicable engine, remove the DO-NOT-OPERATE tag from the start lever.

——— END OF TASK ———

BOEING PROPRIETARY - Copyright © Unpublished Work - See title page for details

DATE	TAIL NUMBER	STATION	AIRLINE CARD NO.	BOEING CARD NO.
				72-200-01-02

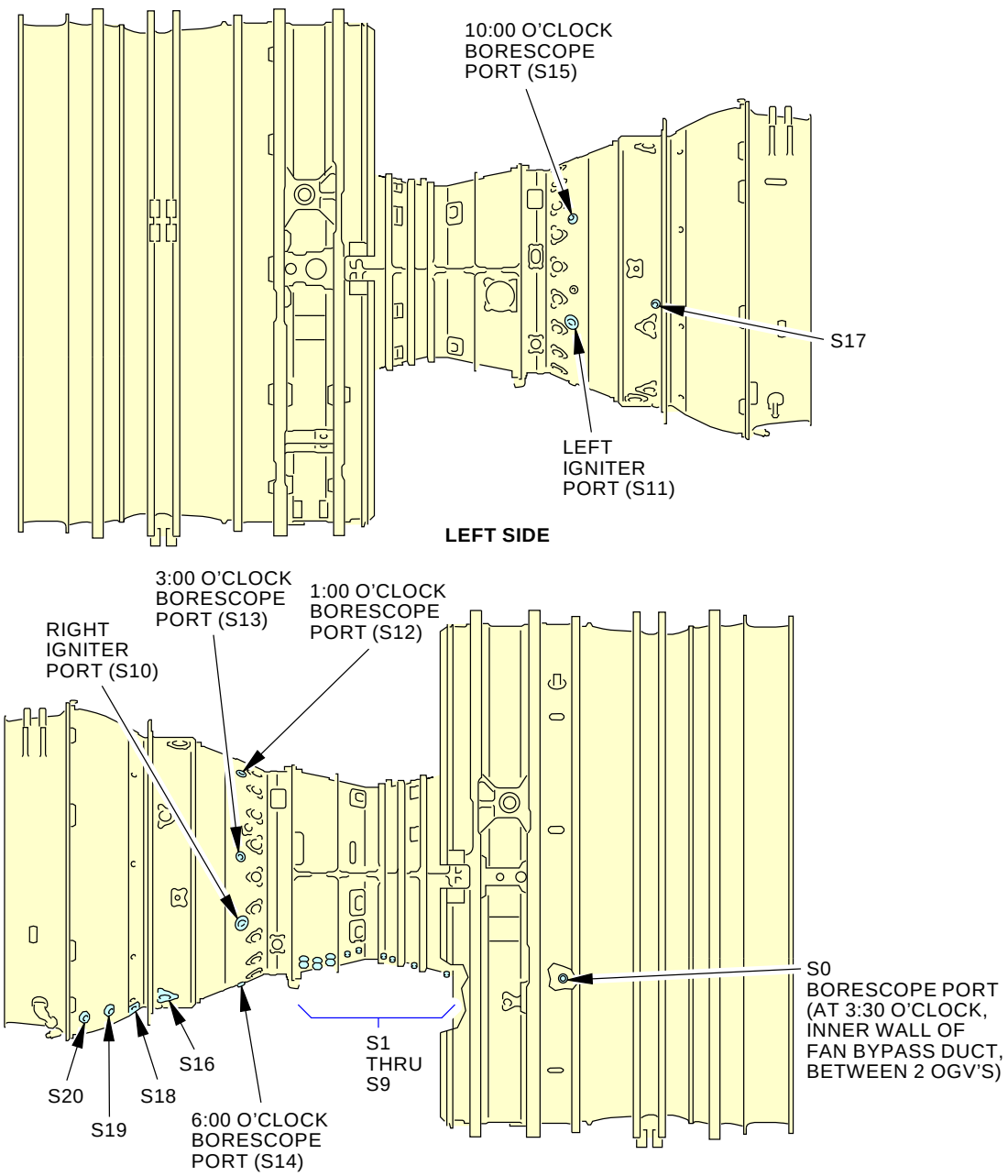

NOTE:

SOME ENGINE COMPONENTS
REMOVED FOR CLARITY.

S-M56-MM-03504-00-B
H50646 S0006582226_V2

Borescope Port Locations
Figure 1

BOEING PROPRIETARY - Copyright © Unpublished Work - See title page for details

DATE	TAIL NUMBER	STATION	AIRLINE CARD NO.	BOEING CARD NO.
				72-200-01-02

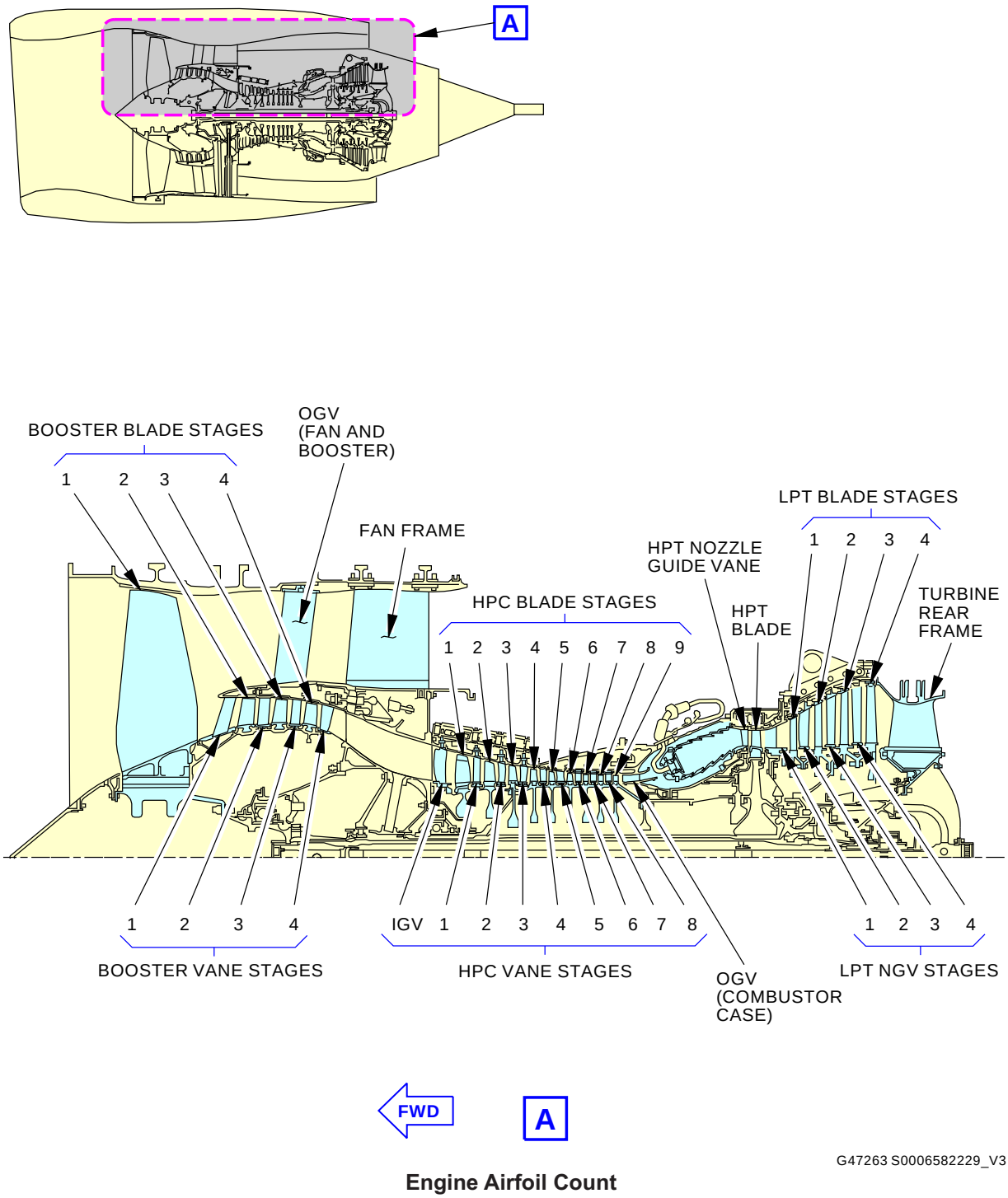

G47263 S0006582229_V3

Engine Airfoil Count
Figure 2 (Sheet 1 of 2)

BOEING PROPRIETARY - Copyright © Unpublished Work - See title page for details

NOMENCLATURE	STAGE	NUMBER OF BLADES
FAN AND BOOSTER	1	24
	2	74
	3	78
	4	74
HIGH PRESSURE COMPRESSOR (HPC)	1	38
	2	53
	3	60
	4	68
	5	75
	6	82
	7	82
	8	80
	9	76
HIGH PRESSURE TURBINE (HPT) NON-7BE ENGINE		80
HIGH PRESSURE TURBINE HPT 7BE ENGINE		76
LOW PRESSURE TURBINE (LPT) NON-7BE ENGINE	1	162
	2	150
	3	150
	4	134
LOW PRESSURE TURBINE LPT 7BE ENGINE	1	154
	2	134
	3	136
	4	138

G48151 S0006582230_V4

Engine Airfoil Count
Figure 2 (Sheet 2 of 2)

BOEING PROPRIETARY - Copyright © Unpublished Work - See title page for details

DATE	TAIL NUMBER	STATION	AIRLINE CARD NO.	BOEING CARD NO.
				72-200-01-02

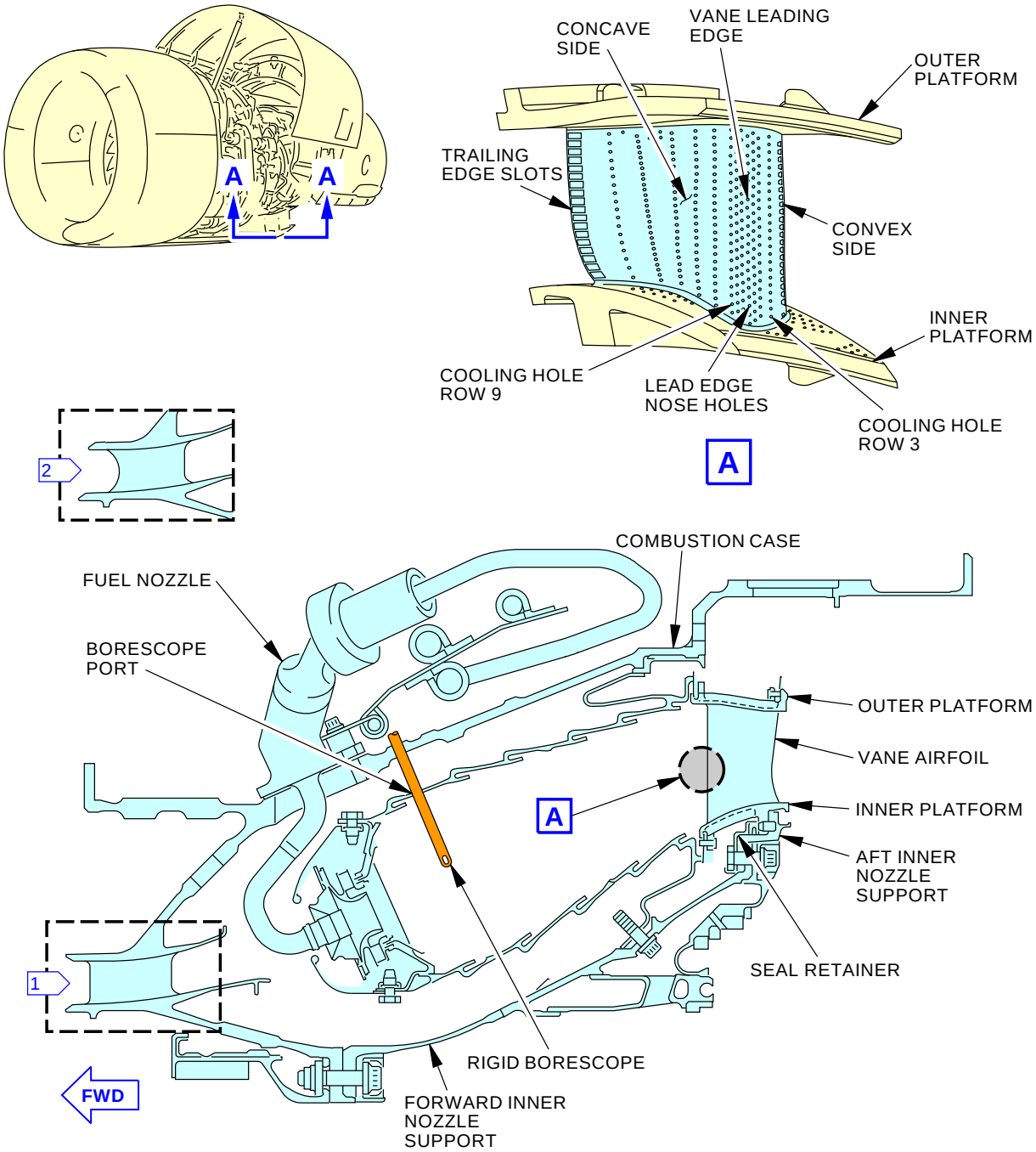

HPT Nozzle Guide Vanes Borescope Inspection
Figure 3

BOEING PROPRIETARY - Copyright © Unpublished Work - See title page for details

DATE	TAIL NUMBER	STATION	AIRLINE CARD NO.	BOEING CARD NO.
				72-200-01-02

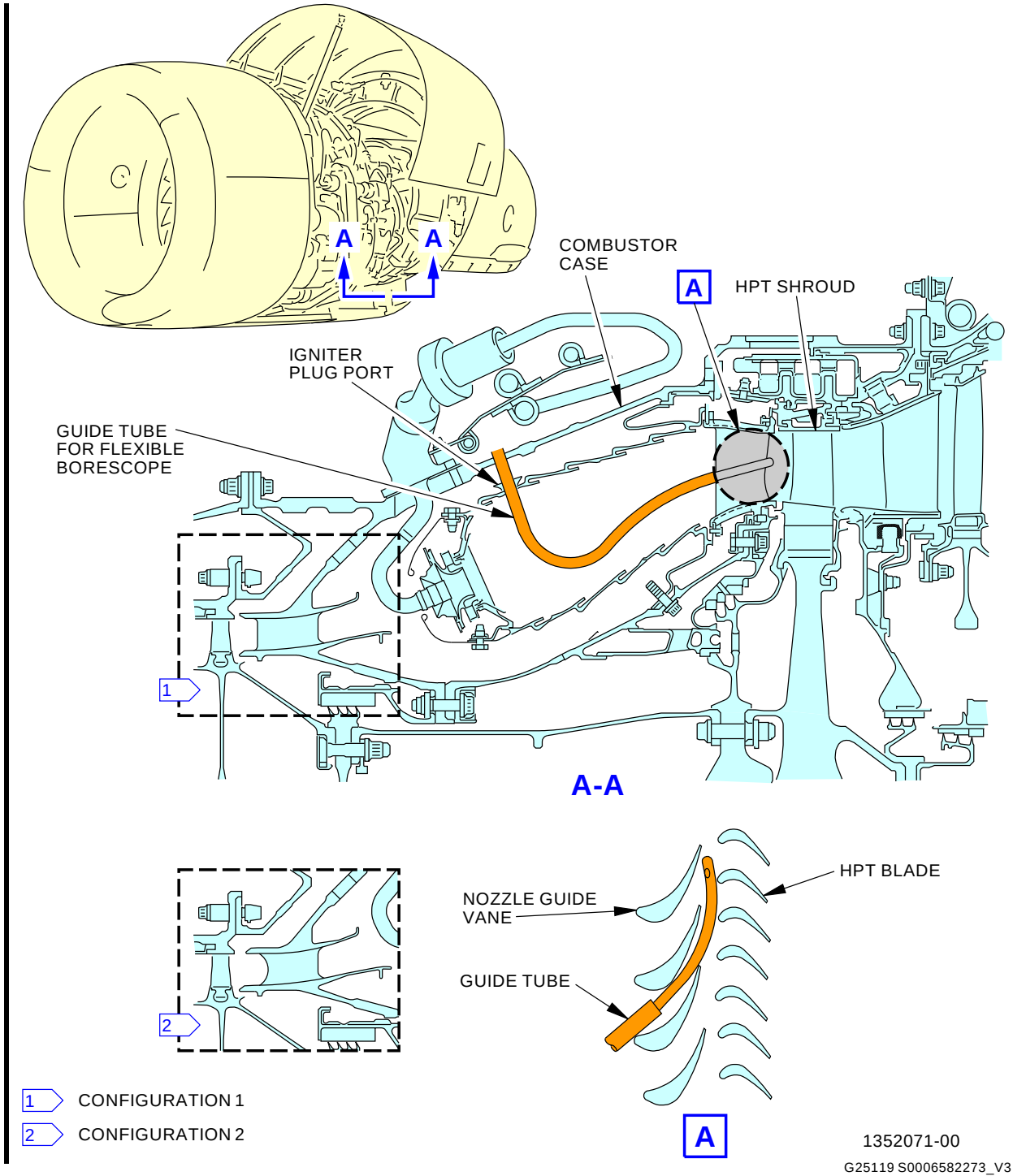

HPT Nozzle Guide Vanes (With Flexible) Borescope Inspection
Figure 4

BOEING PROPRIETARY - Copyright © Unpublished Work - See title page for details

DATE	TAIL NUMBER	STATION	AIRLINE CARD NO.	BOEING CARD NO.
				72-200-01-02

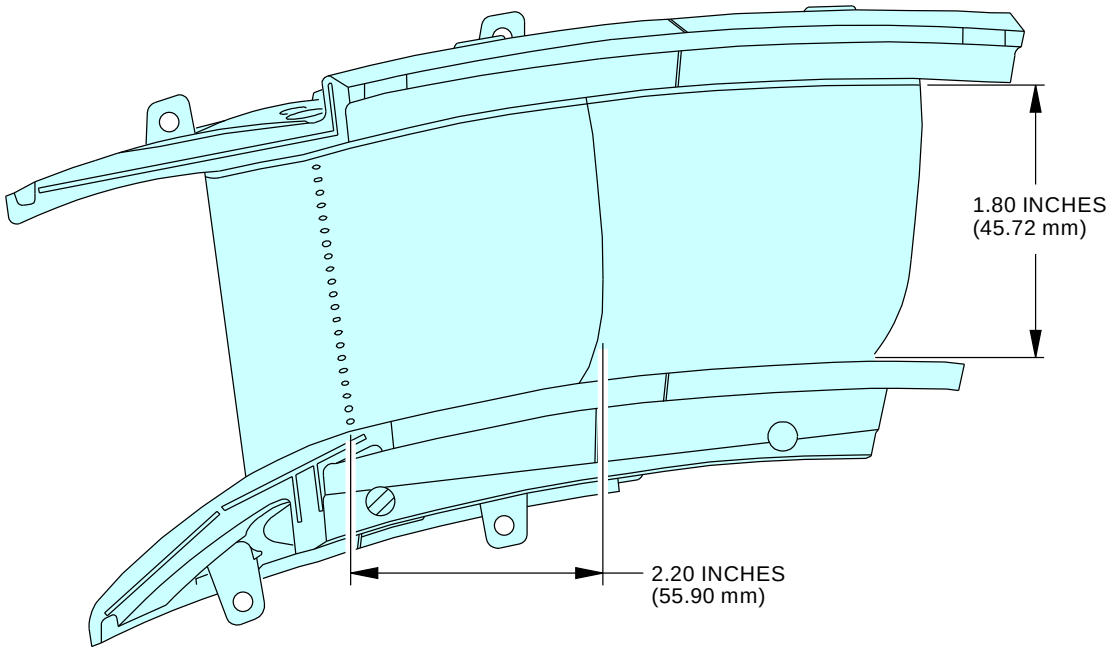

NOTE:

0.09 INCH (2.28 mm) IS THE DISTANCE
BETWEEN COOLING HOLE CENTERLINE.

1218758-00-A
374095 S0000132048_V2

HPT NGV Dimensional Inspection
Figure 5 (Sheet 1 of 3)

BOEING PROPRIETARY - Copyright © Unpublished Work - See title page for details

DATE	TAIL NUMBER	STATION	AIRLINE CARD NO.	BOEING CARD NO.
				72-200-01-02

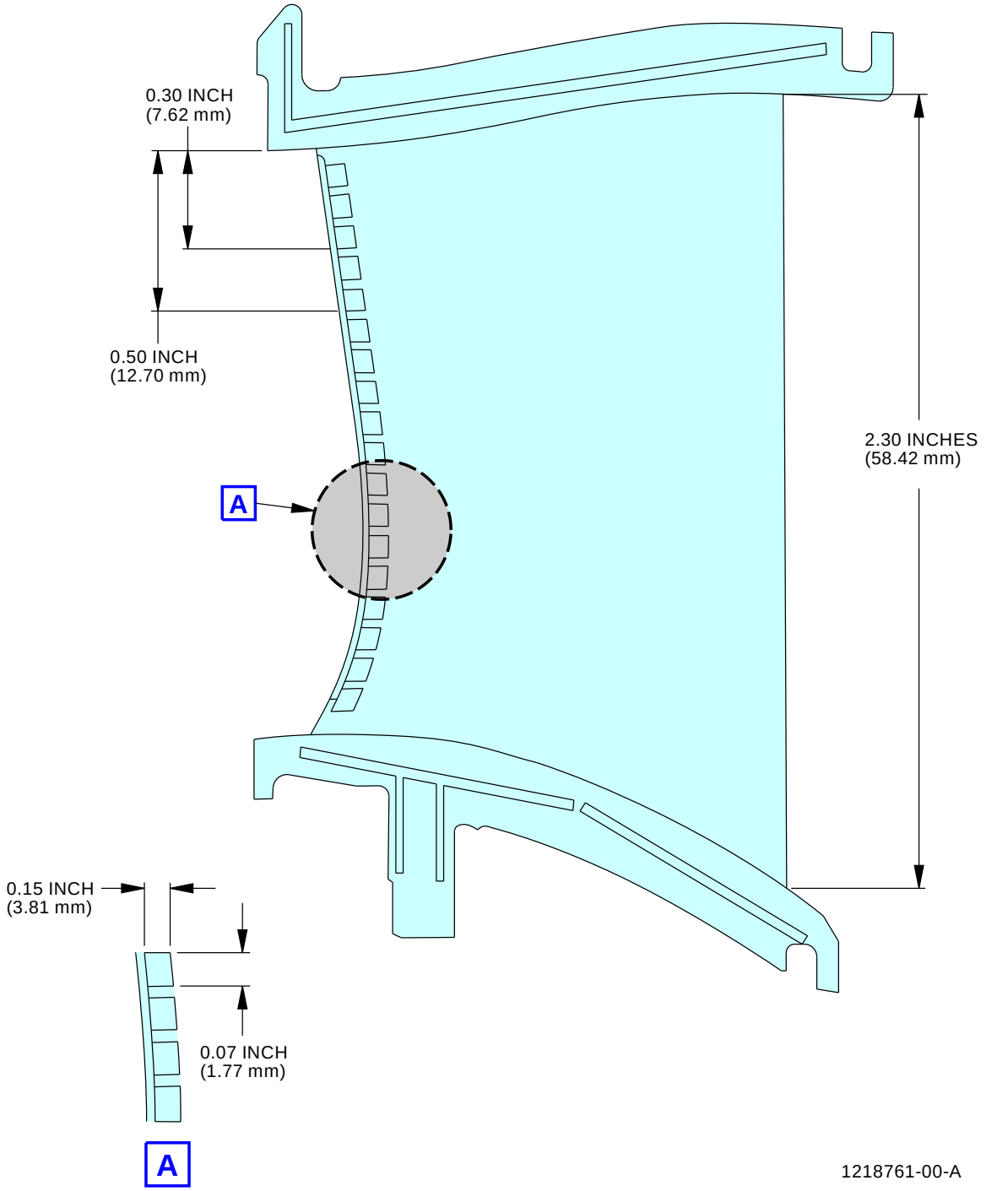

HPT NGV Dimensional Inspection
Figure 5 (Sheet 2 of 3)

BOEING PROPRIETARY - Copyright © Unpublished Work - See title page for details

DATE	TAIL NUMBER	STATION	AIRLINE CARD NO.	BOEING CARD NO.
				72-200-01-02

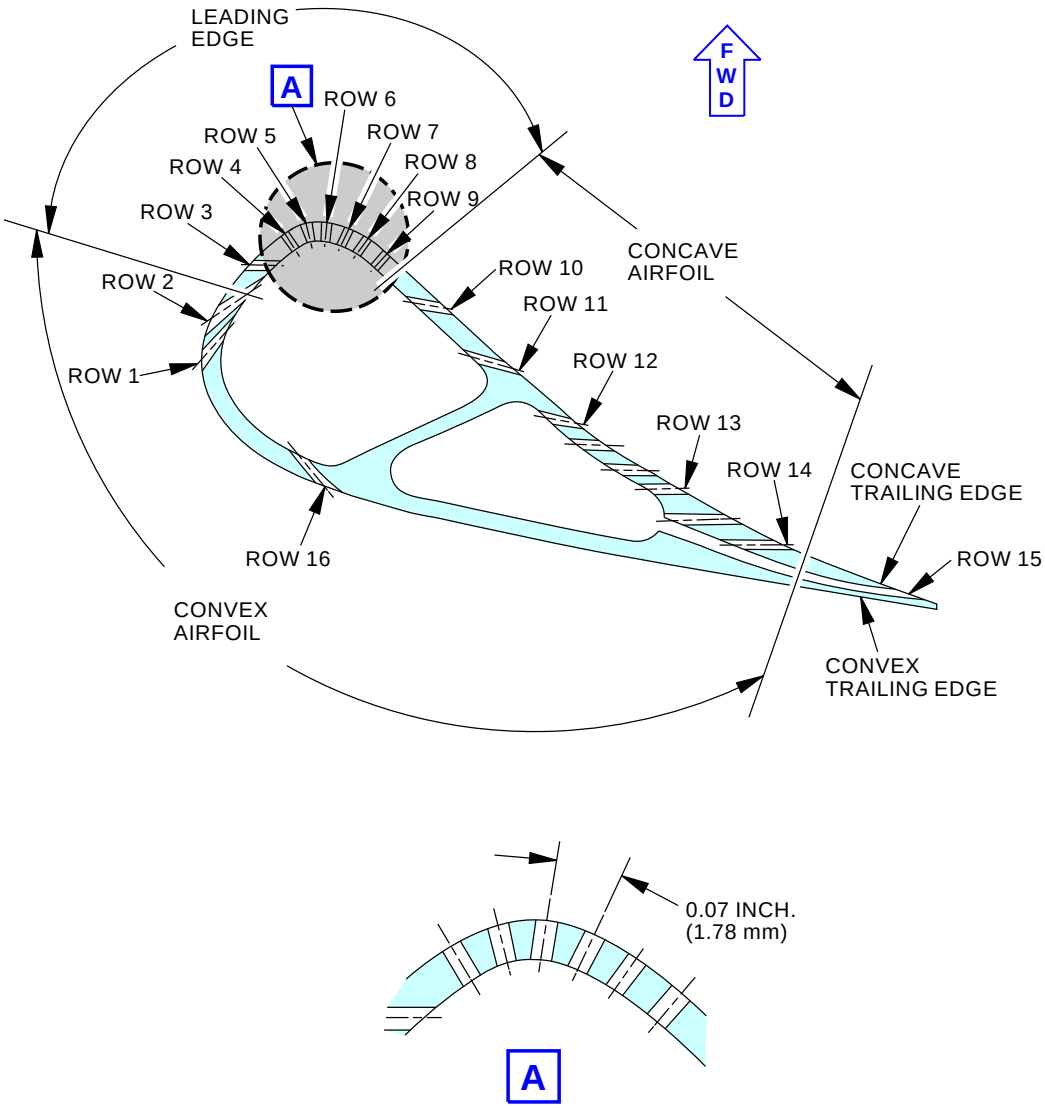

1295200-00

1987630 S0000386042_V2

HPT NGV Dimensional Inspection
Figure 5 (Sheet 3 of 3)

BOEING PROPRIETARY - Copyright © Unpublished Work - See title page for details

DATE	TAIL NUMBER	STATION	AIRLINE CARD NO.	BOEING CARD NO.
				72-200-01-02

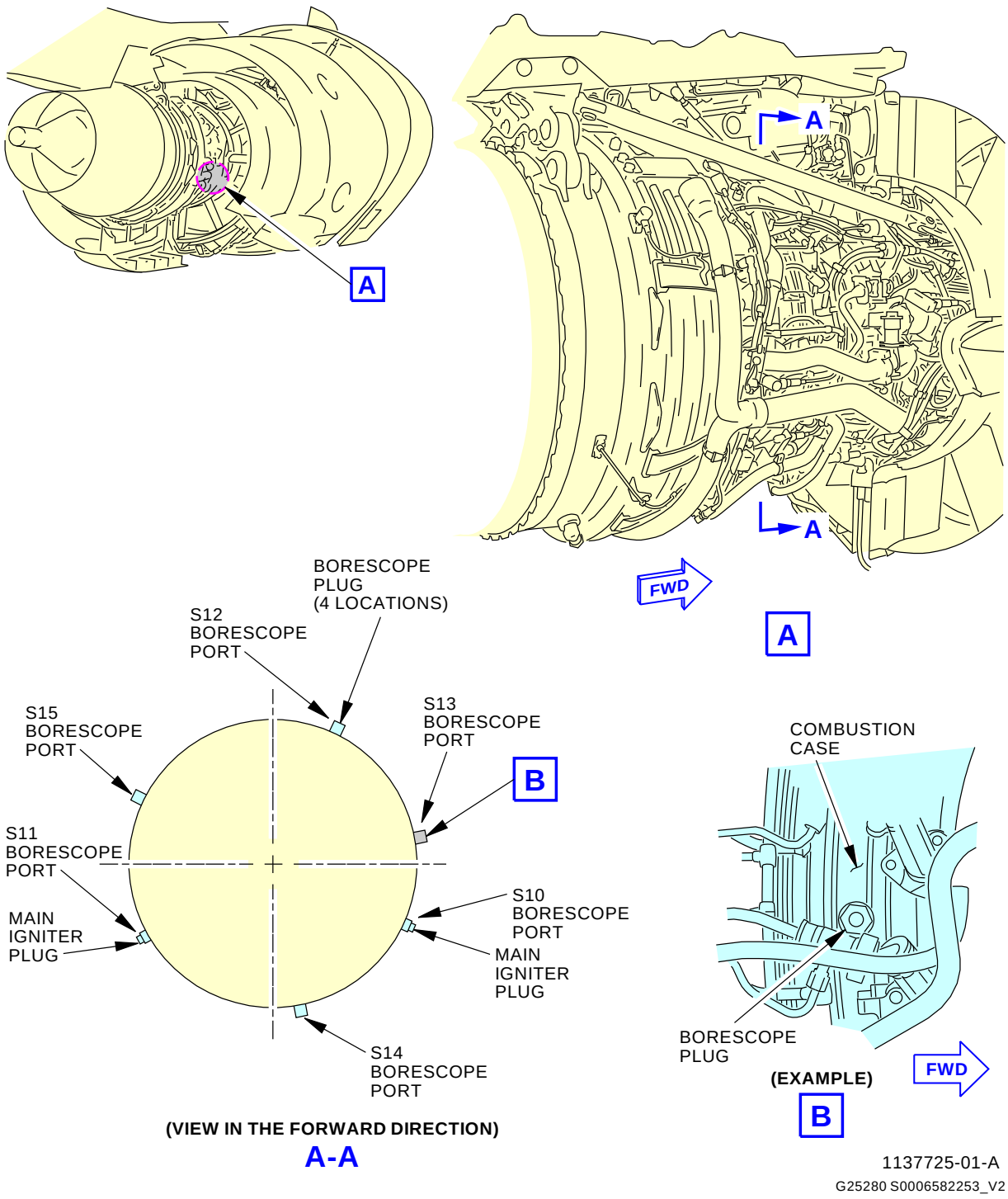

Combustion Chamber Borescope Port Locations
Figure 6

BOEING PROPRIETARY - Copyright © Unpublished Work - See title page for details

DATE	TAIL NUMBER	STATION	AIRLINE CARD NO.	BOEING CARD NO.
				72-200-01-02

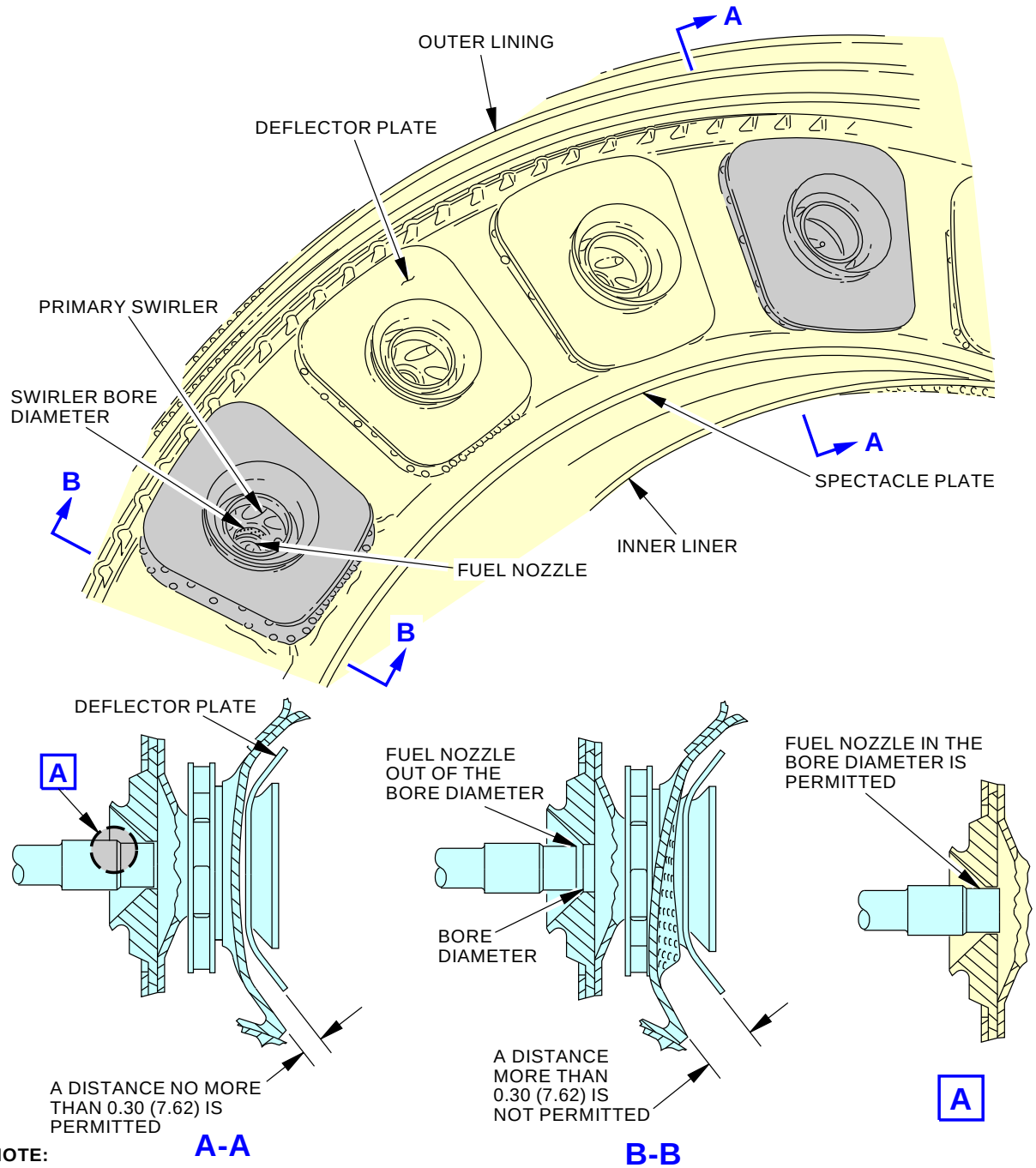

NOTE:

ALL DIMENSIONS ARE IN INCHES WITH MILLIMETERS IN PARENTHESES.

GMM-1096836-00-B
L35434 S0006582261_V2

After Bird Strike Combustion Section Borescope Inspection
Figure 7

BOEING PROPRIETARY - Copyright © Unpublished Work - See title page for details

AIRLINE CARD NO		TITLE			BOEING CARD NO.
		RIGHT ENGINE HPT NOZZLE. (SAC /1 ENGINES)			72-200-02-01
DATE	TASK				RELATED CARD
	INSPECTION - DETAILED				
TAIL NUMBER	WORK AREA	VERSION	THRESHOLD	REPEAT	APPLICABILITY
	RIGHT ENGINE	1.1 1.2	6600 FC 15000 FH	1600 FC 4000 FH	AIRPLANE: ALL ENGINE: ALL
STATION	SKILL				
	ENGIN				
		ACCESS			ZONE
		425 426			421

Borescope inspection of the right engine HPT nozzle. (SAC /1 and DAC engines)

A. References

Reference	Title
AMM 70-10-03-910-801-F00	Temporary Marking Procedures (P/B 201)
AMM 71-11-02-010-801-F00	Open the Fan Cowl Panels (P/B 201)
AMM 71-11-02-410-801-F00	Close the Fan Cowl Panels (P/B 201)
AMM 72-00-00-200-807-F00	HPT Blades Borescope Inspection (P/B 601)
AMM 72-00-00-980-802-F00	Find the Zero Index Mark on the N2 Rotor (P/B 201)
AMM 72-63-01-400-801-F00	Handcranking Drive Cover Installation (P/B 201)
AMM 74-21-02-000-801-F00	Main Igniter Plug Removal (P/B 401)
AMM 74-21-02-400-801-F00	Main Igniter Plug Installation (P/B 401)
AMM 78-31-00-010-801-F00	Open the Thrust Reverser (Selection) (P/B 201)
AMM 78-31-00-010-804-F00	Close the Thrust Reverser (Selection) (P/B 201)
AMM 78-31-00-040-802-F00	Thrust Reverser Deactivation For Ground Maintenance (P/B 201)
AMM 78-31-00-440-803-F00	Thrust Reverser Activation After Ground Maintenance (P/B 201)

B. Consumable Materials

Reference	Description	Specification
D00601 [CP2101]	High-temperature graphite compound	SAE AMS 2518
D50032 [CP1064]	Compound - Antiseize - Milk of Magnesia	
D50034 [CP2619]	Compound - Antiseize - Pure Nickel Special, Never - Seez	CFM CP2619
G01043	Cloth - Lint-free	
G02345 [CP8001]	Wire - Safety, 0.032 Inch (0.8 mm) Diameter	CFM CP8001, AMS 5687
G02481 [CP2801]	Marker - Temporary	
G50065 [CP8006]	Cable, Safety, Stainless Steel, 0.032 inch (0.813 mm) Diameter	M50 TF 9 CL-A

BOEING PROPRIETARY - Copyright © Unpublished Work - See title page for details

C. Tools/Equipment

NOTE: When more than one tool part number is listed under the same "Reference" number, the tools shown are alternates to each other within the same airplane series. Tool part numbers that are replaced or non-procurable are preceded by "Opt:", which stands for Optional.

Reference	Description
COM-2195	Set - Borescope Rigid, Olympus Part #: 856A1320P04 Supplier: 58828
COM-2196	Set - Borescope Fiber, 6 mm diameter Part #: 856A1321P05 Supplier: 58828 Part #: 856A1321P06 Supplier: 58828 Opt Part #: 856A1321P03 Supplier: 58828
COM-4302	Set - Borescope Rigid, Wolf Part #: 856A1320P05 Supplier: 58828
COM-4303	Set - Borescope Rigid, Lenox Part #: 856A1320P06 Supplier: 58828
COM-4304	Set - Borescope Rigid, ITI USA Part #: 856A1320P07 Supplier: 58828
SPL-2197	Light Source - Borescope, Lenox (150W) Part #: 856A1322P02 Supplier: 58828
SPL-2198	Kit - Borescope Guide, HP Turbine, CFM56 Engines Part #: 856A1310G01 Supplier: 58828
SPL-2207	Guide Tube - Borescope, HPT Shroud, CFM56 Engines Part #: 856A1351P01 Supplier: 58828
SPL-4305	Light Source - Borescope, Olympus (150W) Part #: 856A1322P03 Supplier: 58828
SPL-4306	Light Source - Borescope, Wolf (300W) Part #: 856A1322P04 Supplier: 58828
SPL-4307	Light Source - Borescope, Machida Part #: 856A1322P07 Supplier: 58828
SPL-4308	Light Source - Borescope, ITI USA (150W) Part #: 856A1322P08 Supplier: 58828
STD-10711	Shop Vacuum (400Hz if using aircraft power)
STD-585	Mat - Protective, 3/8 Inch (9.5 mm) Minimum Thickness, Minimum 42x60 Inches (1x1.5 meters) with Warning Streamers

BOEING PROPRIETARY - Copyright © Unpublished Work - See title page for details

MECH	INSP

TASK 72-00-00-200-802-F00

1. Borescope Inspection Preparation

(Figure 1 and Figure 2)

A. General

(1) This task provides the instructions on how to prepare for the borescope inspection.

B. Borescope Inspection Preparation

SUBTASK 72-00-00-860-001-F00

(1) For the applicable engine, install a DO-NOT-OPERATE tag on the start lever.

SUBTASK 72-00-00-860-080-F00

(2) For Engine 1, open this circuit breaker and install a safety tag:

CAPT Electrical System Panel, P18-2

Row	Col	Number	Name
B	8	C01103	ENGINE 1 START VALVE

SUBTASK 72-00-00-860-081-F00

(3) For Engine 2, open this circuit breaker and install a safety tag:

F/O Electrical System Panel, P6-2

Row	Col	Number	Name
C	4	C00154	ENGINE 2 START VALVE

SUBTASK 72-00-00-860-082-F00

(4) Do these tasks in sequence to safely open the left and right thrust reversers on the applicable engine:

WARNING: DO THE DEACTIVATION PROCEDURE FOR THE THRUST REVERSER TO PREVENT THE OPERATION OF THE THRUST REVERSER. ACCIDENTAL OPERATION OF THE THRUST REVERSER CAN CAUSE INJURIES TO PERSONS OR DAMAGE TO EQUIPMENT.

(a) Do this task: Thrust Reverser Deactivation for Ground Maintenance, AMM TASK 78-31-00-040-802-F00.

(b) Open the left and right fan cowl panels (AMM TASK 71-11-02-010-801-F00).

WARNING: OBEY THE INSTRUCTIONS IN THE PROCEDURE TO OPEN THE THRUST REVERSERS. IF YOU DO NOT OBEY THE INSTRUCTIONS, INJURIES TO PERSONS AND DAMAGE TO EQUIPMENT CAN OCCUR.

(c) Open the left and right thrust reversers (AMM TASK 78-31-00-010-801-F00).

BOEING PROPRIETARY - Copyright © Unpublished Work - See title page for details

MECH	INSP

SUBTASK 72-00-00-480-001-F00

(5) Refer to the applicable steps and borescope equipment to prepare for the inspection:

NOTE: For this procedure, borescope equipment is used for all inspections but not for the axial preload check of the Stage 4 LPT blades.

NOTE: Refer to the CFM Illustrated Tool and Equipment manual for the current part number for all the borescope equipment.

NOTE: Alternative borescope equipment that is as good or better than the CFM Borescope Specification is permitted for use. Refer to the CFM Non-Destructive Test Manual (CFM-TP-NT.11), Borescope Inspection, Part 7, for requirements.

CAUTION: MAKE SURE THAT THE POWER SWITCH IS IN THE OFF POSITION AND THE LIGHT INTENSITY CONTROL IS SET AT MINIMUM BEFORE YOU CONNECT THE LIGHT SOURCE TO THE POWER SUPPLY. MAKE SURE THE LIGHT SOURCE AND THE POWER SUPPLY ARE CORRECTLY ATTACHED TO A GROUND. DAMAGE TO THE EQUIPMENT CAN OCCUR.

(a) Connect the applicable light source to a power source that is grounded.

(b) You will use these borescope tools to do a complete borescope inspection of the engine:

NOTE: For more data on the use of this borescope equipment, refer to CFM NDTM 72-00-00, Part 7.

It is not recommended to do a borescope inspection at temperatures more than 150 degrees F (65.6 degrees C). You can do a dry motor to increase the engine cool down rate.

1) The applicable borescope and light source
   a) Rigid Borescope, COM-2195 and light source, SPL-4305
   b) Rigid Borescope, COM-4302 and light source, SPL-4306
   c) Rigid Borescope, COM-4303 and light source, SPL-2197
   d) Rigid Borescope, COM-4304 and light source, SPL-4308
   e) alternative light source, SPL-4307
2) The monitor, MSE-64
3) The fiber borescope, COM-2196 to do the inspection of these areas:
   a) The combustion chamber
   b) The HPT nozzle guide vanes
   c) The HPT blades.
4) The borescope guide kit, SPL-2198 and the borescope guide tube, SPL-2207 to do the inspection of these areas:
   a) The HPT nozzle guide vanes
   b) The HPT blades.

BOEING PROPRIETARY - Copyright © Unpublished Work - See title page for details

DATE	TAIL NUMBER	STATION	AIRLINE CARD NO.	BOEING CARD NO.
				72-200-02-01

MECH	INSP

SUBTASK 72-00-00-210-001-F00

(6) If it is necessary to index the N2 rotor, do this task: Find the Zero Index Mark on the N2 Rotor, AMM TASK 72-00-00-980-802-F00.

NOTE: It is recommended that you stop the N2 rotor when you put each blade in position for inspection. This will permit you to do a full inspection of each blade.

SUBTASK 72-00-00-210-002-F00

(7) If it is necessary to turn or index the N1 rotor, do these steps:

(a) Put a protective mat, STD-585 in the inlet cowl.

(b) Find the number one fan blade.

NOTE: The fan blade 1 is adjacent to a machined dimple in the aft area of the rear spinner cone.

(c) Use a marker, G02481 [CP2801] to make a mark to identify the number one fan blade (AMM TASK 70-10-03-910-801-F00).

(d) Align the leading edge of the number one fan blade with the T12 temperature sensor.

NOTE: The T12 temperature sensor is approximately at the 10:30 o'clock position as you look in the inlet cowl.

SUBTASK 72-00-00-210-129-F00

(8) Do a general visual inspection of the primary plug assembly for oil puddling.

NOTE: An oil puddle in the exhaust system can occur after the engine is dry or wet motored (refer to task 71–71–00–200–801–F00).

SUBTASK 72-00-00-100-016-F00

(9) If oil puddling is found, remove the oil from the primary plug:

(a) Clean oil from the surface with a lint-free cloth, G01043. A vacuum, STD-10711 can be used to remove unwanted oil.

——— END OF TASK ———

BOEING PROPRIETARY - Copyright © Unpublished Work - See title page for details

MECH	INSP

TASK 72-00-00-200-806-F00

2. HPT Nozzle Guide Vanes Borescope Inspection (SAC (/1) and DAC Engines)

A. General

(1) This task provides the steps on how to do the borescope inspection of the HPT nozzle guide vanes for SAC (/1) engines and DAC engines.

B. Prepare for the Inspection

SUBTASK 72-00-00-210-035-F00

(1) If not already done, do this task: Borescope Inspection Preparation, TASK 72-00-00-200-802-F00.

SUBTASK 72-00-00-210-122-F00

(2) Make sure that you verify the version of the CFM56 engine on the data placard.

NOTE: The newest version of the CFM56-7B series engine is the CFM56-7BEXX engine. The “XX” in CFM56-7BXX/3 is the thrust rating of the engine. This information is found on the engine data placard on the engine fan case.

NOTE: A Tech Insertion (TI) engine has a “/3” after the thrust rating on the engine data plate. An example of a Singular Annular Combustor (SAC) Engine with TI is CFM56-7B22/3. An example of a non-TI engine is CFM56-7B22. The “XX” in CFM56-7BXX/3 is the thrust rating of the engine. This information is found on the engine data placard on the engine fan case.

SUBTASK 72-00-00-010-006-F00

(3) Remove the S13 and S15 borescope plugs (Figure 6 and Figure 7):

NOTE: To do an initial inspection, it is only necessary to remove the S13 and S15 borescope plugs. If you find damage, you must remove the main igniter plugs and the other borescope plugs to do a complete inspection.

SUBTASK 72-00-00-010-007-F00

(4) If you find damage from the initial inspection, do these steps to remove the main igniter plugs and the other borescope plugs:

NOTE: The port for the 4:00 o'clock main igniter plug is referred to as the S10 borescope port. The port for the 8:00 o'clock main igniter plug is referred to as the S11 borescope port.

(a) Do this task: Main Igniter Plug Removal, AMM TASK 74-21-02-000-801-F00.

(b) Remove the S12 and S14 borescope plugs.

SUBTASK 72-00-00-210-038-F00

(5) Do these steps to prepare for the inspection of the HPT nozzle (Figure 3, Figure 4):

(a) Connect the applicable borescope to the light source.

1) Rigid Borescope, COM-2195 and light source, SPL-4305
2) Rigid Borescope, COM-4302 and light source, SPL-4306
3) Rigid Borescope, COM-4303 and light source, SPL-2197
4) Rigid Borescope, COM-4304 and light source, SPL-4308
5) Use the rigid borescope with the black band.

BOEING PROPRIETARY - Copyright © Unpublished Work - See title page for details

(b) Put the rigid borescope through the borescope port.

(c) Turn the light source ON.

SUBTASK 72-00-00-210-039-F00

(6) If a complete inspection of the nozzle convex side is necessary, do the steps that follow (Figure 3, Figure 4):

NOTE: This inspection is only necessary if you find an indication of damage on the convex side during the initial or complete inspection with the rigid probes.

(a) Connect the borescope, COM-2196 to the applicable light source.

(b) Put the borescope guide kit, SPL-2198 or borescope guide tube, SPL-2207 into the borescope port.

1) Use the borescope guide kit, SPL-2198 to do the inspection of the leading edge and the concave surfaces.

2) Use the borescope guide tube, SPL-2207 to do the inspection of the convex surfaces.

(c) Put the fiberscope through the guide tube.

(d) Make sure the borescope is correctly adjusted.

(e) Turn the lightsource ON.

C. HPT Nozzle Guide Vanes Borescope Inspection

SUBTASK 72-00-00-210-040-F00

(1) Examine the leading edges of the 42 HPT nozzle guide vanes as follow:

NOTE: To estimate the size of distress, use the applicable visual aid. To find distress locations relative to specific rows, refer to the applicable figure.

NOTE: The airfoil baffle is visible inside the airfoil when missing material occurs. It is sheet metal with cooling holes.

(a) Cracks that connect nose holes

1) There is no limit to the number with these conditions:

a) The cracks are not longer than 0.3 inch (7.60 mm).

b) There is no missing material.

2) Do the inspection again after each 800 cycle interval with these conditions:

a) The cracks are not longer than 0.3 inch (7.60 mm).

b) The total area of missing material is not more than 0.25 square inch (161 square mm) per vane. Maximum of 4 vanes per 90° arc.

c) Missing material does not extend aft of rows 3 or 9.

3) Do the inspection again after each 400 cycle interval with these conditions:

a) The cracks are not more than 1 inch (25.4 mm) in length.

b) The total area of missing material is not more than 0.25 square inch (161 square mm) per vane. Maximum of 4 vanes per 90° arc.

c) Missing material does not extend aft of rows 3 or 9.

4) The Continue-In-Service limit is 25 cycles with this condition:

BOEING PROPRIETARY - Copyright © Unpublished Work - See title page for details

MECH	INSP

a) The area of missing material is not more than 0.3 square inch (193 square mm) per vane. Maximum of 4 vanes per 90° arc.

(b) Other cracks

1) There is no limit to the number with these conditions:

a) The cracks are not longer than 0.5 inch (12.7 mm) in length.

b) There is no missing material.

2) Do the inspection again after each 800 cycle interval with these conditions:

a) The cracks are not longer than 0.5 inch (12.7 mm) in length.

b) The total area of missing material is not more than 0.25 square inch (161 square mm) per vane. Maximum of 4 vanes per 90° arc.

c) Missing material does not extend aft of rows 3 or 9.

3) Do the inspection again after each 400 cycle interval with these conditions:

a) The cracks are not more than 1 inch (25.4 mm) in length.

b) The total area of missing material is not more than 0.25 square inch (161 square mm) per vane. Maximum of 4 vanes per 90° arc.

c) Missing material does not extend aft of rows 3 or 9.

4) The Continue-In-Service limit is 25 cycles with this condition:

a) The area of missing material is not more than 0.3 square inch (193 square mm) per vane. Maximum of 4 vanes per 90° arc.

(c) Burns or spalled areas

1) There is no limit to the number with this condition:

a) The area of missing material is not more than 0.15 inch (97 square mm) per vane. Maximum of 4 vanes per 90° arc.

2) Do the inspection again after each 800 cycle interval with these conditions:

a) The total area of missing material is not more than 0.25 square inch (161 square mm) per vane. Maximum of 4 vanes per 90° arc.

b) Missing material does not extend aft of rows 3 or 9.

3) The Continue-In-Service limit is 25 cycles with this condition:

a) The area of missing material is not more than 0.3 square inch (193 square mm) per vane. Maximum of 4 vanes per 90° arc.

(d) Baffle missing material

1) Not Permitted

2) The Continue-In-Service limit is 25 cycles with this condition:

a) The area of missing material is equivalent to a rectangle defined by 4 adjacent holes.

SUBTASK 72-00-00-210-041-F00

(2) Examine the concave surfaces as follow:

(a) Radial cracks that extend from the gill holes

1) Permitted if there is no missing material.

BOEING PROPRIETARY - Copyright © Unpublished Work - See title page for details

MECH	INSP

2) Do the inspection again after each 400 cycle interval with these conditions:
   a) The missing material, cause by cracks, is not more than 0.04 square inch (25.81 square mm).
   b) No more than 4 airfoils for each engine have missing material caused by cracks.
3) The Continue-In-Service limit is 25 cycles with this condition:
   a) The missing material, caused by cracks, is not more than 0.45 square inch (290 square mm).

(b) Other cracks (not in the gill hole rows)
1) Permitted if there is no missing material.
2) Do the inspection again after each 400 cycle interval with these conditions:
   a) The missing material, cause by cracks, is not more than 0.04 square inch (25.81 square mm).
   b) No more than 4 airfoils for each engine have missing material caused by cracks.
3) The Continue-In-Service limit is 25 cycles with this condition:
   a) The missing material, caused by cracks, is not more than 0.45 square inch (290 square mm).

(c) Burns
1) There is no limit to the quantity with this condition:
   a) There is no burn-through into the inner cooling passages.
2) The Continue-In-Service limit is 25 cycles with this condition:
   a) The area which is burned through is not larger than 0.45 square inch (290 square mm) on each vane.

(d) Missing thermal barrier coating (TBC)
1) There is no limit to the quantity of TBC that can be missing.

SUBTASK 72-00-00-210-110-F00

(3) Examine the convex surfaces as follow:

NOTE: To find distress location relative to specific rows, refer to the applicable figure.

(a) Radial or axial cracks
1) Permitted if there is no missing material.
2) If there is missing material, do the inspection again after each 800 cycle interval with these conditions:
   a) The total area of missing material is not more than 0.05 square inch (39.1 square mm) per vane. Maximum of 4 vanes per 90° arc.
   b) Cracking does not occur aft of cooling hole row 16.
3) The Continue-In-Service limit is 25 cycles with this condition:
   a) The missing material, caused by cracks, is not larger than 0.45 square inch (290 square mm) on each vane.

BOEING PROPRIETARY - Copyright © Unpublished Work - See title page for details

(b) Burns or bulges

NOTE: An open area of the cavity caused by bulging is to be interpreted as missing material where the following limits apply.

1) Permitted if there is no missing material.

2) If there is missing material, do the inspection again after each 800 cycle interval with these conditions:

a) The total area of missing material is not more than 0.05 square inch (39.1 square mm) per vane. Maximum of 4 vanes per 90° arc.

b) Bulging does not occur aft of cooling hole row 16.

3) The Continue-In-Service limit 25 cycles with this condition:

a) The missing material is not larger than 0.45 square inch (290 square mm) on each vane.

(c) Missing thermal barrier coating (TBC)

1) There is no limit to the quantity of TBC that can be missing.

SUBTASK 72-00-00-210-042-F00

(4) Examine the trailing edges as follow:

(a) Cracks or burns

1) There is no limit to the number of cracks or the amount of burns permitted.

(b) Buckled or bowed material

1) There is no limit.

(c) Missing material

1) The maximum quantity of missing material from each vane is 0.5 inch (12.7 mm) length in the axial direction.

2) The Continue-In-Service limit is 25 cycles with these conditions:

a) The missing material is not longer than 0.75 inch (19.05 mm) in the axial direction.

b) Make sure that the HPT blades must be in limits (AMM TASK 72-00-00-200-807-F00).

SUBTASK 72-00-00-210-043-F00

(5) Examine all airfoil surfaces as follow:

(a) Craze cracks

NOTE: Craze cracks look like many surface cracks that do not have visual width or depth.

1) There is no limit.

(b) Nicks, marks, scratches, and dents

1) There is no limit.

(c) Metal splatter

1) There is no limit.

BOEING PROPRIETARY - Copyright © Unpublished Work - See title page for details

MECH	INSP

SUBTASK 72-00-00-210-044-F00

(6) Examine the inner and outer platforms as follow:

(a) Cracks in the parent metal

1) There is no limit.

(b) Missing metal or burning of parent metal

1) There is no limit of missing metal or burning of parent metal with no through holes.

2) Do the inspection again after 400 cycle interval with these conditions:

a) The through hole is in or less than 1 inch (25.4mm) of the leading edge of the inner or outer platform.

b) The through hole is not more than 0.06 square inch (38.71 square mm).

c) No more than 4 segments for each engine have through holes on the inner or outer platform.

3) The Continue-In-Service limit is 25 cycles with this condition:

a) Through hole is not more than 0.12 square inch (77.42 square mm).

(c) Nicks, scores, scratches and dents on the platform surface

1) There is no limit.

(d) Bulges and bowing

1) There is no limit.

(e) Cracks in the braze joints of the airfoil-to-platform surfaces

1) There is no limit to the number with this condition:

a) Separation of the braze joint is not permitted, unless it was caused by burning.

D. Put the Airplane Back to Its Usual Condition

SUBTASK 72-00-00-420-008-F00

(1) Install the borescope plugs as follow:

(a) Lubricate the threads of the borescope plugs with pure nickel special compound, D50034 [CP2619], milk of magnesia compound, D50032 [CP1064] or graphite compound, D00601 [CP2101].

(b) Install the borescope plugs.

AKS ALL; AIRPLANES WITH SINGLE ANNULAR COMBUSTOR (SAC) ENGINES

1) Tighten each borescope plug to 57-63 pound-inches (6.4-7.1 Newton-meters).

AKS ALL

I 2) Install safety wire, G02345 [CP8001] or cable, G50065 [CP8006] on each borescope plug.

SUBTASK 72-00-00-420-009-F00

(2) If they were removed, do this task: Main Igniter Plug Installation, AMM TASK 74-21-02-400-801-F00.

BOEING PROPRIETARY - Copyright © Unpublished Work - See title page for details

DATE	TAIL NUMBER	STATION	AIRLINE CARD NO.	BOEING CARD NO.
				72-200-02-01

MECH	INSP

SUBTASK 72-00-00-860-083-F00

(3) If the borescope procedure is complete, do this task: Put the Airplane Back to Its Usual Condition, TASK 72-00-00-200-814-F00.

——— END OF TASK ———

BOEING PROPRIETARY - Copyright © Unpublished Work - See title page for details

TASK 72-00-00-200-814-F00

MECH	INSP

3. Put the Airplane Back to Its Usual Condition

A. General

(1) This task provides the instructions on how to put the airplane back to its usual condition after an inspection.

B. Put the Airplane Back to Its Usual Condition

SUBTASK 72-00-00-080-009-F00

CAUTION: MAKE SURE THERE ARE NO TOOLS, PARTS, OR OTHER UNWANTED MATERIAL IN THE INLET COWL. IF YOU DO NOT OBEY THESE INSTRUCTIONS, YOU CAN CAUSE DAMAGE TO THE ENGINE.

(1) Remove the protective mat, STD-585 from the inner surface of the inlet cowl.

SUBTASK 72-00-00-210-100-F00

(2) Disassemble the borescope equipment as follows:

(a) Turn the light source to OFF.

1) Keep the blower ON until the lamp and case are cool.

(b) Make sure that the power switch is OFF.

(c) Make sure that the light intensity control is set to minimum.

(d) Disconnect the power supply and the ground.

(e) Disconnect the extension and the viewer from the borescope.

(f) Disconnect the borescope from the fiber light cable.

(g) Disconnect the fiber light cable from the light source.

SUBTASK 72-00-00-210-101-F00

CAUTION: MAKE SURE THAT YOU INSTALL THE COVER ON THE GEARBOX. IF YOU DO NOT INSTALL THE COVER, ENGINE OIL LEAKS CAN OCCUR DURING OPERATION AND ENGINE DAMAGE CAN OCCUR.

(3) If not already done, do this task: Handcranking Drive Cover Installation, AMM TASK 72-63-01-400-801-F00.

SUBTASK 72-00-00-410-045-F00

WARNING: OBEY THE INSTRUCTIONS IN THE PROCEDURE TO CLOSE THE THRUST REVERSERS. IF YOU DO NOT OBEY THE INSTRUCTIONS, INJURIES TO PERSONS AND DAMAGE TO EQUIPMENT CAN OCCUR.

(4) Do these tasks in sequence to safely close the left and right thrust reversers:

(a) Do this task: Close the Thrust Reverser (Selection), AMM TASK 78-31-00-010-804-F00.

(b) Do this task: Close the Fan Cowl Panels, AMM TASK 71-11-02-410-801-F00.

(c) Do this task: Thrust Reverser Activation after Ground Maintenance, AMM TASK 78-31-00-440-803-F00.

BOEING PROPRIETARY - Copyright © Unpublished Work - See title page for details

DATE	TAIL NUMBER	STATION	AIRLINE CARD NO.	BOEING CARD NO.
				72-200-02-01

MECH	INSP

SUBTASK 72-00-00-860-078-F00

(5) For Engine 1, remove the safety tag and close this circuit breaker:

CAPT Electrical System Panel, P18-2

Row	Col	Number	Name
B	8	C01103	ENGINE 1 START VALVE

SUBTASK 72-00-00-860-079-F00

(6) For Engine 2, remove the safety tag and close this circuit breaker:

F/O Electrical System Panel, P6-2

Row	Col	Number	Name
C	4	C00154	ENGINE 2 START VALVE

SUBTASK 72-00-00-860-006-F00

(7) On the applicable engine, remove the DO-NOT-OPERATE tag from the start lever.

——— END OF TASK ———

BOEING PROPRIETARY - Copyright © Unpublished Work - See title page for details

DATE	TAIL NUMBER	STATION	AIRLINE CARD NO.	BOEING CARD NO.
				72-200-02-01

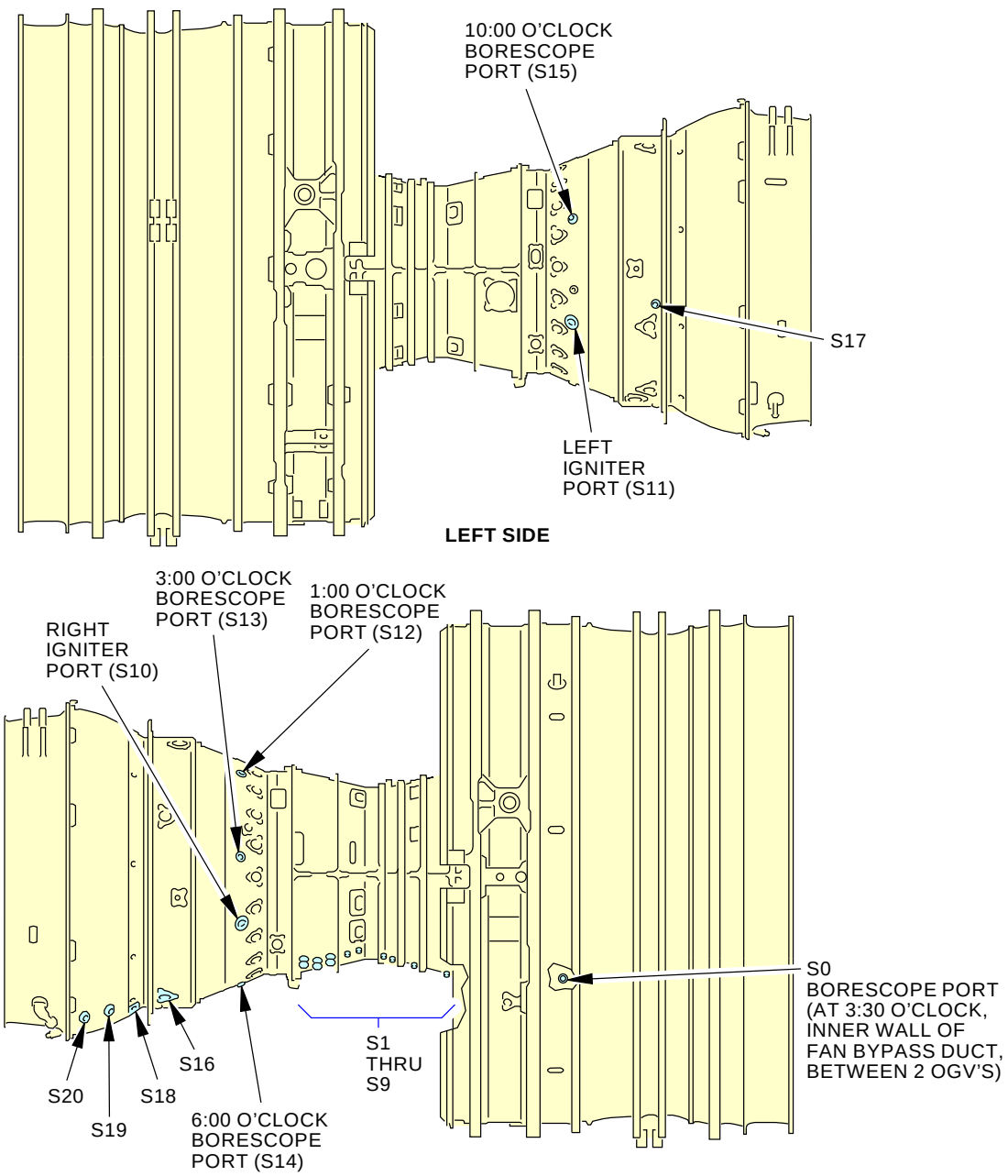

NOTE:

SOME ENGINE COMPONENTS
REMOVED FOR CLARITY.

S-M56-MM-03504-00-B
H50646 S0006582226_V2

Borescope Port Locations
Figure 1

BOEING PROPRIETARY - Copyright © Unpublished Work - See title page for details

DATE	TAIL NUMBER	STATION	AIRLINE CARD NO.	BOEING CARD NO.
				72-200-02-01

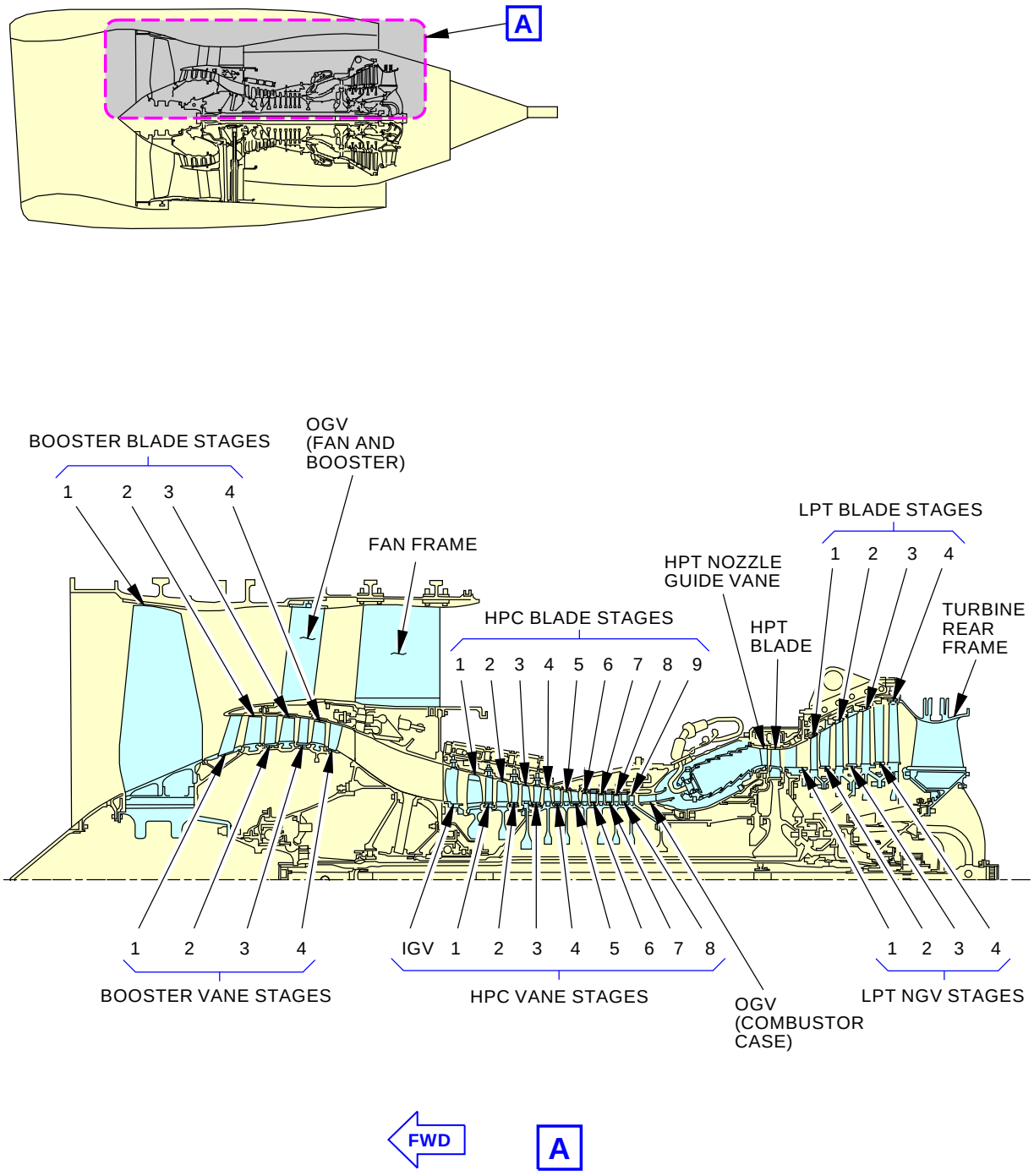

G47263 S0006582229_V3

Engine Airfoil Count
Figure 2 (Sheet 1 of 2)

BOEING PROPRIETARY - Copyright © Unpublished Work - See title page for details

NOMENCLATURE	STAGE	NUMBER OF BLADES
FAN AND BOOSTER	1	24
	2	74
	3	78
	4	74
HIGH PRESSURE COMPRESSOR (HPC)	1	38
	2	53
	3	60
	4	68
	5	75
	6	82
	7	82
	8	80
	9	76
HIGH PRESSURE TURBINE (HPT) NON-7BE ENGINE		80
HIGH PRESSURE TURBINE HPT 7BE ENGINE		76
LOW PRESSURE TURBINE (LPT) NON-7BE ENGINE	1	162
	2	150
	3	150
	4	134
LOW PRESSURE TURBINE LPT 7BE ENGINE	1	154
	2	134
	3	136
	4	138

G48151 S0006582230_V4

Engine Airfoil Count
Figure 2 (Sheet 2 of 2)

BOEING PROPRIETARY - Copyright © Unpublished Work - See title page for details

DATE	TAIL NUMBER	STATION	AIRLINE CARD NO.	BOEING CARD NO.
				72-200-02-01

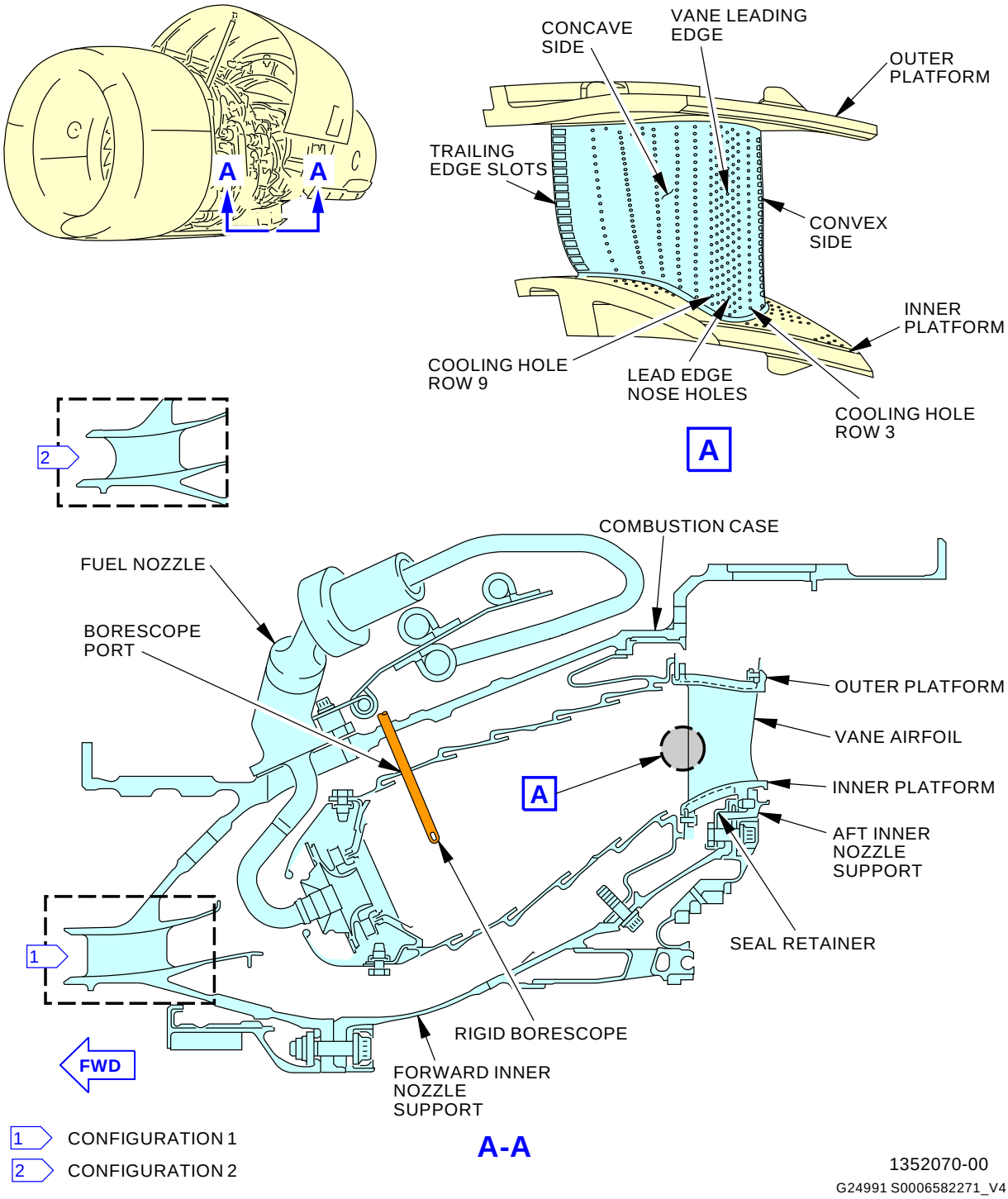

HPT Nozzle Guide Vanes Borescope Inspection
Figure 3

BOEING PROPRIETARY - Copyright © Unpublished Work - See title page for details

DATE	TAIL NUMBER	STATION	AIRLINE CARD NO.	BOEING CARD NO.
				72-200-02-01

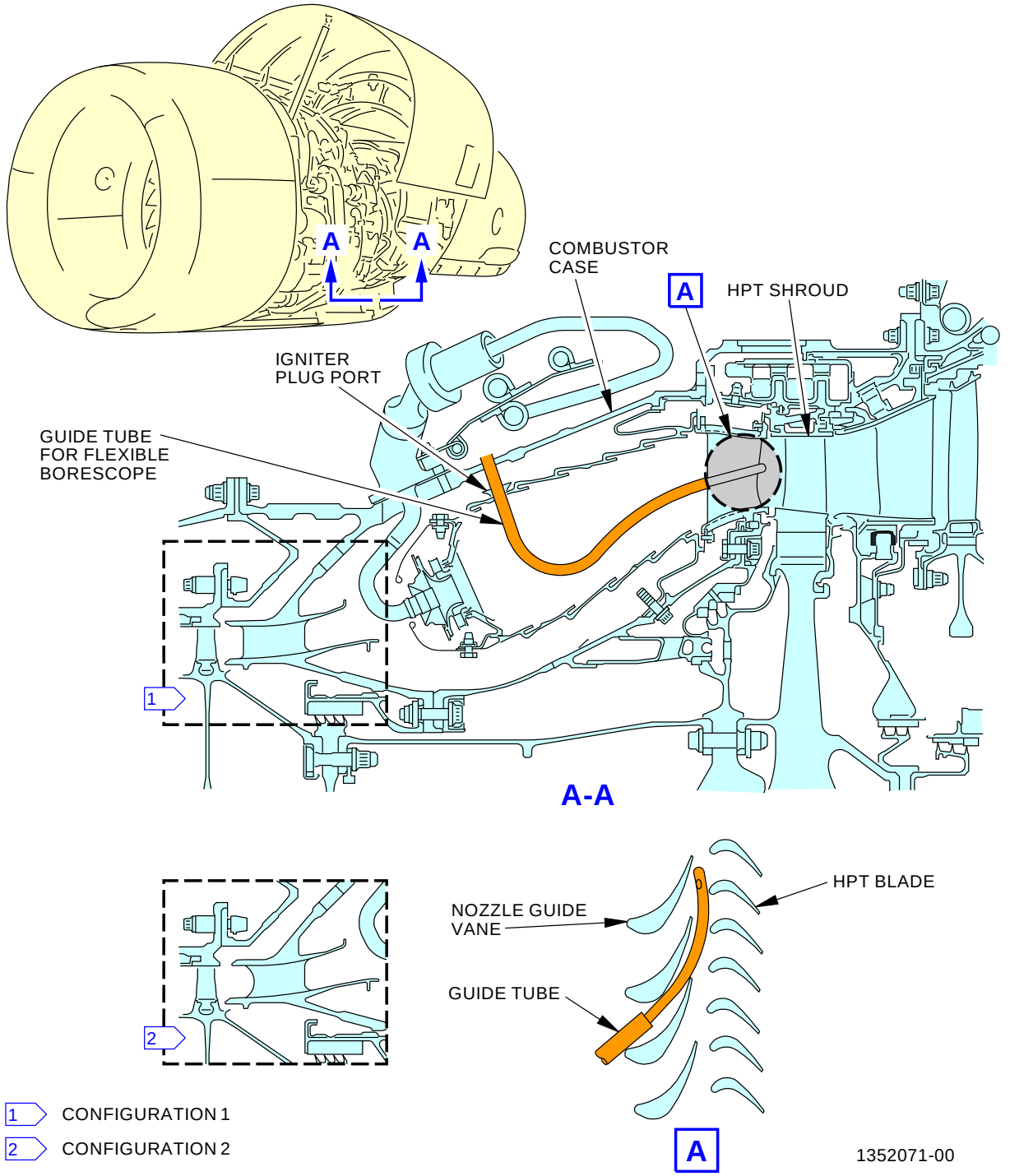

HPT Nozzle Guide Vanes (With Flexible) Borescope Inspection
Figure 4

BOEING PROPRIETARY - Copyright © Unpublished Work - See title page for details

DATE	TAIL NUMBER	STATION	AIRLINE CARD NO.	BOEING CARD NO.
				72-200-02-01

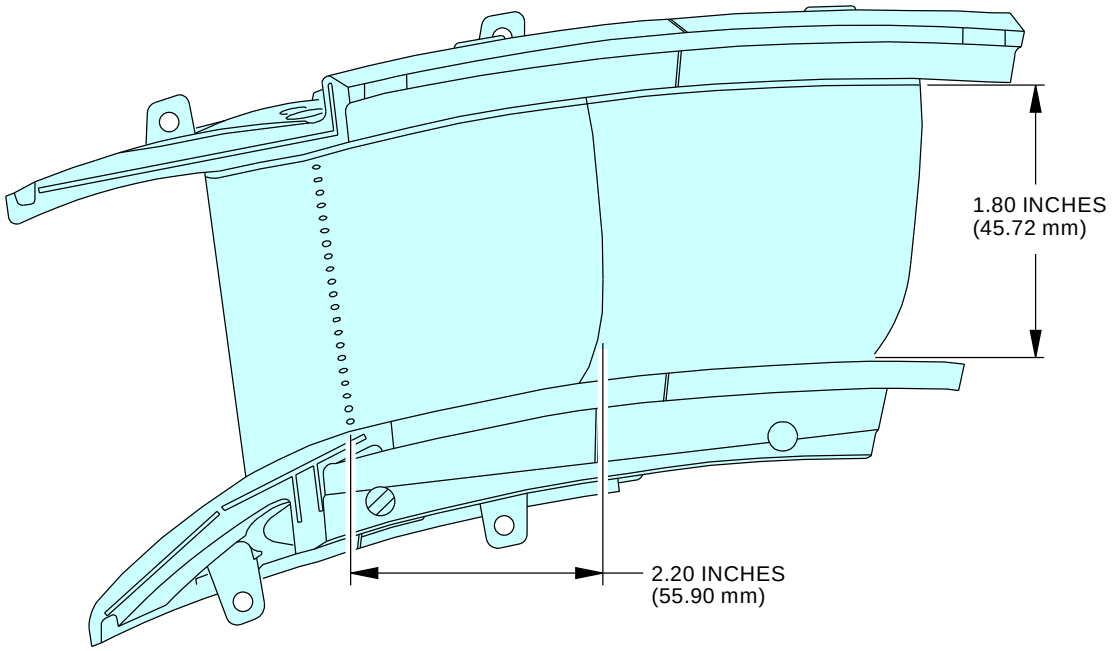

NOTE:

0.09 INCH (2.28 mm) IS THE DISTANCE
BETWEEN COOLING HOLE CENTERLINE.

1218758-00-A
374095 S0000132048_V2

HPT NGV Dimensional Inspection
Figure 5 (Sheet 1 of 3)

BOEING PROPRIETARY - Copyright © Unpublished Work - See title page for details

DATE	TAIL NUMBER	STATION	AIRLINE CARD NO.	BOEING CARD NO.
				72-200-02-01

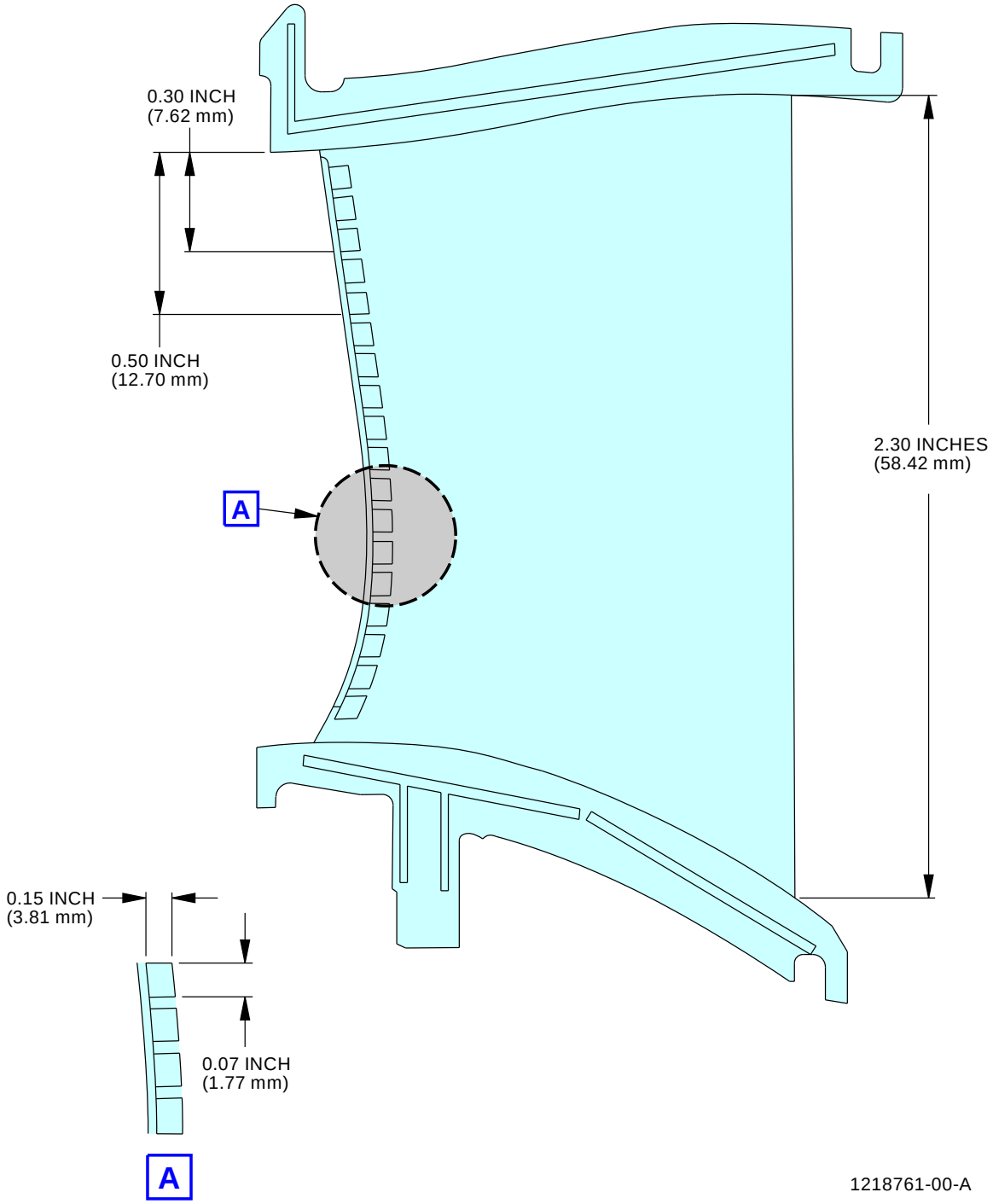

HPT NGV Dimensional Inspection
Figure 5 (Sheet 2 of 3)

BOEING PROPRIETARY - Copyright © Unpublished Work - See title page for details

DATE	TAIL NUMBER	STATION	AIRLINE CARD NO.	BOEING CARD NO.
				72-200-02-01

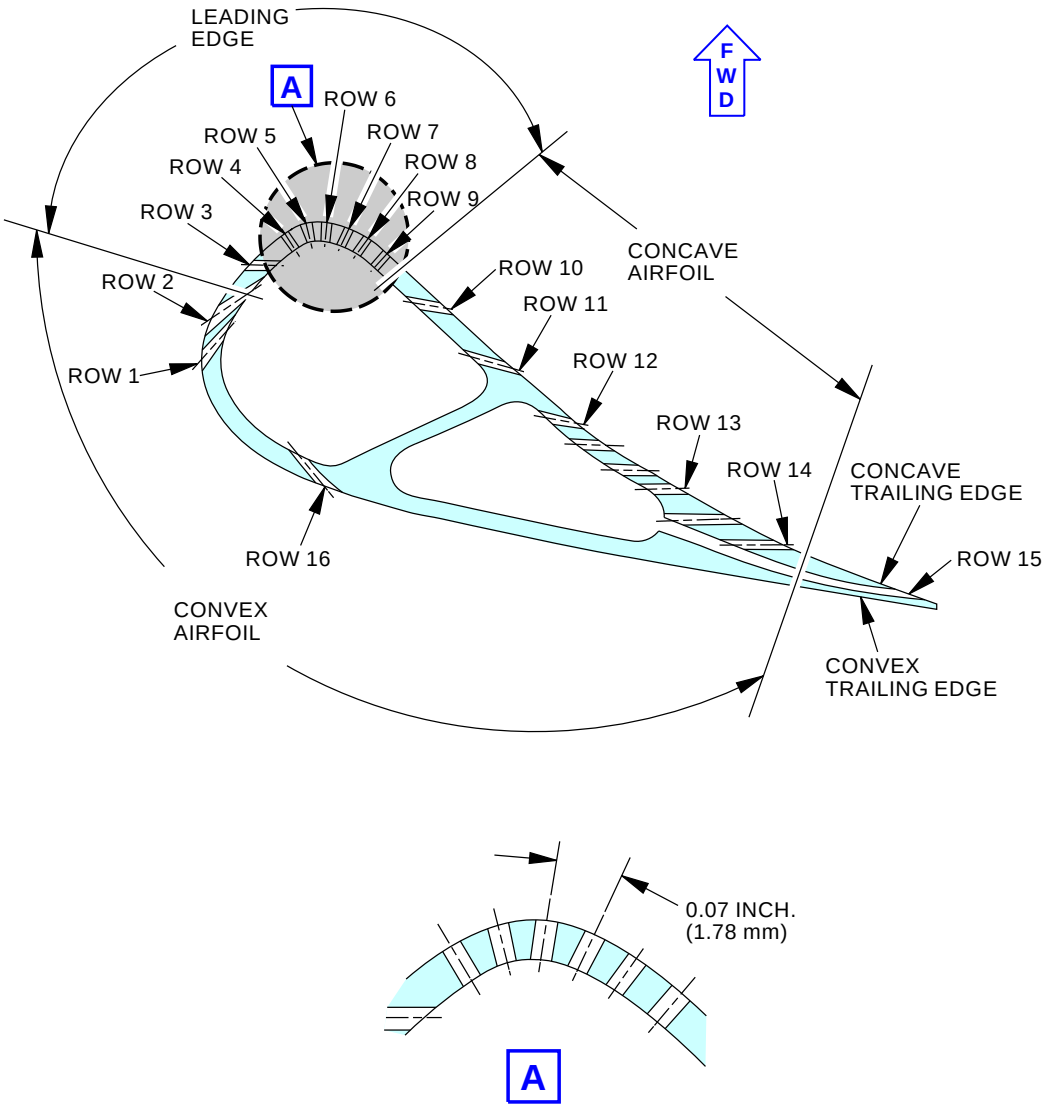

1295200-00
1987630 S0000386042_V2

HPT NGV Dimensional Inspection
Figure 5 (Sheet 3 of 3)

BOEING PROPRIETARY - Copyright © Unpublished Work - See title page for details

DATE	TAIL NUMBER	STATION	AIRLINE CARD NO.	BOEING CARD NO.
				72-200-02-01

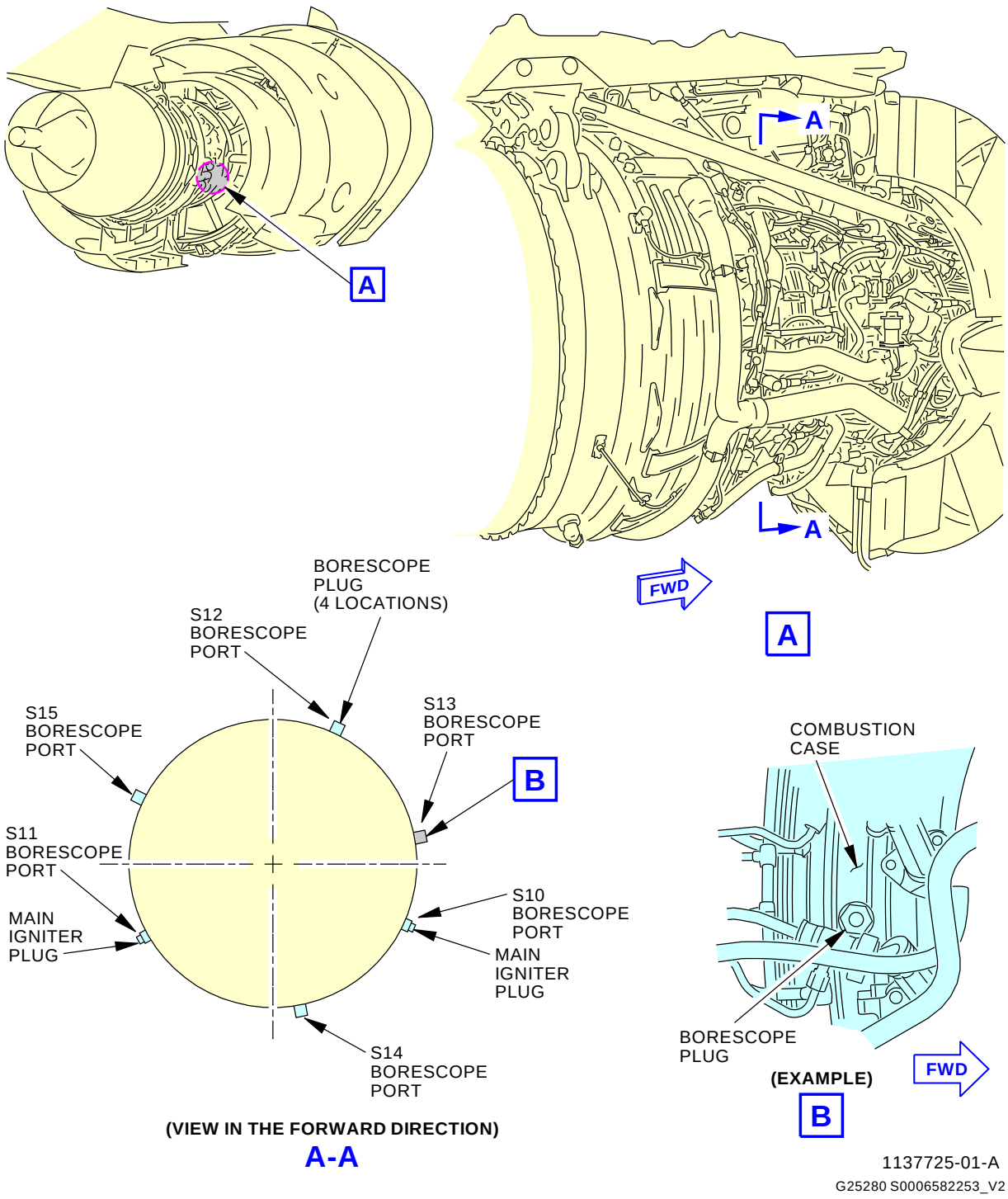

Combustion Chamber Borescope Port Locations
Figure 6

BOEING PROPRIETARY - Copyright © Unpublished Work - See title page for details

DATE	TAIL NUMBER	STATION	AIRLINE CARD NO.	BOEING CARD NO.
				72-200-02-01

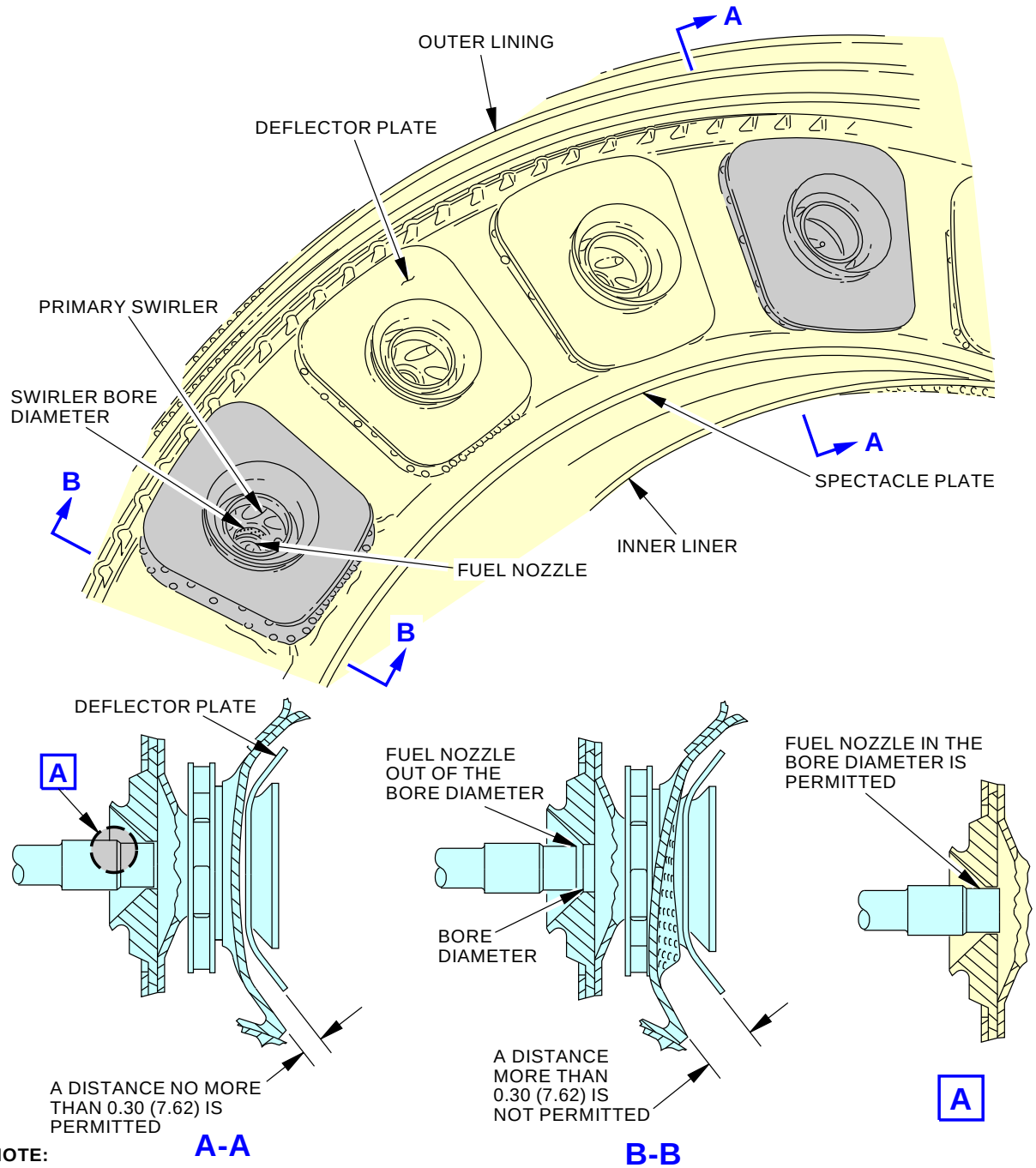

NOTE:

ALL DIMENSIONS ARE IN INCHES WITH MILLIMETERS IN PARENTHESES.

GMM-1096836-00-B
L35434 S0006582261_V2

After Bird Strike Combustion Section Borescope Inspection
Figure 7

BOEING PROPRIETARY - Copyright © Unpublished Work - See title page for details

AIRLINE CARD NO		TITLE			BOEING CARD NO.
		RIGHT ENGINE HPT NOZZLE. (TECH INSERTION /3 AND 7BE ENGINES)			72-200-02-02
DATE	TASK INSPECTION - DETAILED				RELATED CARD
TAIL NUMBER	WORK AREA RIGHT ENGINE	VERSION 1.1 1.2	THRESHOLD 6600 FC 15000 FH	REPEAT 1600 FC 4000 FH	APPLICABILITY AIRPLANE: ALL ENGINE: ALL
STATION	SKILL ENGIN				
		ACCESS 425 426			ZONE 421

Borescope inspection of the right engine HPT nozzle. (Tech Insertion /3 and 7BE engines)

A. References

Reference	Title
AMM 70-10-03-910-801-F00	Temporary Marking Procedures (P/B 201)
AMM 71-11-02-010-801-F00	Open the Fan Cowl Panels (P/B 201)
AMM 71-11-02-410-801-F00	Close the Fan Cowl Panels (P/B 201)
AMM 72-00-00-200-807-F00	HPT Blades Borescope Inspection (P/B 601)
AMM 72-00-00-980-802-F00	Find the Zero Index Mark on the N2 Rotor (P/B 201)
AMM 72-63-01-400-801-F00	Handcranking Drive Cover Installation (P/B 201)
AMM 74-21-02-000-801-F00	Main Igniter Plug Removal (P/B 401)
AMM 74-21-02-400-801-F00	Main Igniter Plug Installation (P/B 401)
AMM 78-31-00-010-801-F00	Open the Thrust Reverser (Selection) (P/B 201)
AMM 78-31-00-010-804-F00	Close the Thrust Reverser (Selection) (P/B 201)
AMM 78-31-00-040-802-F00	Thrust Reverser Deactivation For Ground Maintenance (P/B 201)
AMM 78-31-00-440-803-F00	Thrust Reverser Activation After Ground Maintenance (P/B 201)

B. Consumable Materials

Reference	Description	Specification
D00601 [CP2101]	High-temperature graphite compound	SAE AMS 2518
D50032 [CP1064]	Compound - Antiseize - Milk of Magnesia	
D50034 [CP2619]	Compound - Antiseize - Pure Nickel Special, Never - Seez	CFM CP2619
G01043	Cloth - Lint-free	
G02345 [CP8001]	Wire - Safety, 0.032 Inch (0.8 mm) Diameter	CFM CP8001, AMS 5687
G02481 [CP2801]	Marker - Temporary	
G50065 [CP8006]	Cable, Safety, Stainless Steel, 0.032 inch (0.813 mm) Diameter	M50 TF 9 CL-A

BOEING PROPRIETARY - Copyright © Unpublished Work - See title page for details

C. Tools/Equipment

NOTE: When more than one tool part number is listed under the same "Reference" number, the tools shown are alternates to each other within the same airplane series. Tool part numbers that are replaced or non-procurable are preceded by "Opt:", which stands for Optional.

Reference	Description
COM-2195	Set - Borescope Rigid, Olympus Part #: 856A1320P04 Supplier: 58828
COM-2196	Set - Borescope Fiber, 6 mm diameter Part #: 856A1321P05 Supplier: 58828 Part #: 856A1321P06 Supplier: 58828 Opt Part #: 856A1321P03 Supplier: 58828
COM-4302	Set - Borescope Rigid, Wolf Part #: 856A1320P05 Supplier: 58828
COM-4303	Set - Borescope Rigid, Lenox Part #: 856A1320P06 Supplier: 58828
COM-4304	Set - Borescope Rigid, ITI USA Part #: 856A1320P07 Supplier: 58828
SPL-2197	Light Source - Borescope, Lenox (150W) Part #: 856A1322P02 Supplier: 58828
SPL-2198	Kit - Borescope Guide, HP Turbine, CFM56 Engines Part #: 856A1310G01 Supplier: 58828
SPL-2207	Guide Tube - Borescope, HPT Shroud, CFM56 Engines Part #: 856A1351P01 Supplier: 58828
SPL-4305	Light Source - Borescope, Olympus (150W) Part #: 856A1322P03 Supplier: 58828
SPL-4306	Light Source - Borescope, Wolf (300W) Part #: 856A1322P04 Supplier: 58828
SPL-4307	Light Source - Borescope, Machida Part #: 856A1322P07 Supplier: 58828
SPL-4308	Light Source - Borescope, ITI USA (150W) Part #: 856A1322P08 Supplier: 58828
STD-10711	Shop Vacuum (400Hz if using aircraft power)
STD-585	Mat - Protective, 3/8 Inch (9.5 mm) Minimum Thickness, Minimum 42x60 Inches (1x1.5 meters) with Warning Streamers

BOEING PROPRIETARY - Copyright © Unpublished Work - See title page for details

MECH	INSP

TASK 72-00-00-200-802-F00

1. Borescope Inspection Preparation

(Figure 1 and Figure 2)

A. General

(1) This task provides the instructions on how to prepare for the borescope inspection.

B. Borescope Inspection Preparation

SUBTASK 72-00-00-860-001-F00

(1) For the applicable engine, install a DO-NOT-OPERATE tag on the start lever.

SUBTASK 72-00-00-860-080-F00

(2) For Engine 1, open this circuit breaker and install a safety tag:

CAPT Electrical System Panel, P18-2

Row	Col	Number	Name
B	8	C01103	ENGINE 1 START VALVE

SUBTASK 72-00-00-860-081-F00

(3) For Engine 2, open this circuit breaker and install a safety tag:

F/O Electrical System Panel, P6-2

Row	Col	Number	Name
C	4	C00154	ENGINE 2 START VALVE

SUBTASK 72-00-00-860-082-F00

(4) Do these tasks in sequence to safely open the left and right thrust reversers on the applicable engine:

WARNING: DO THE DEACTIVATION PROCEDURE FOR THE THRUST REVERSER TO PREVENT THE OPERATION OF THE THRUST REVERSER. ACCIDENTAL OPERATION OF THE THRUST REVERSER CAN CAUSE INJURIES TO PERSONS OR DAMAGE TO EQUIPMENT.

(a) Do this task: Thrust Reverser Deactivation for Ground Maintenance, AMM TASK 78-31-00-040-802-F00.

(b) Open the left and right fan cowl panels (AMM TASK 71-11-02-010-801-F00).

WARNING: OBEY THE INSTRUCTIONS IN THE PROCEDURE TO OPEN THE THRUST REVERSERS. IF YOU DO NOT OBEY THE INSTRUCTIONS, INJURIES TO PERSONS AND DAMAGE TO EQUIPMENT CAN OCCUR.

(c) Open the left and right thrust reversers (AMM TASK 78-31-00-010-801-F00).

BOEING PROPRIETARY - Copyright © Unpublished Work - See title page for details

MECH	INSP

SUBTASK 72-00-00-480-001-F00

(5) Refer to the applicable steps and borescope equipment to prepare for the inspection:

NOTE: For this procedure, borescope equipment is used for all inspections but not for the axial preload check of the Stage 4 LPT blades.

NOTE: Refer to the CFM Illustrated Tool and Equipment manual for the current part number for all the borescope equipment.

NOTE: Alternative borescope equipment that is as good or better than the CFM Borescope Specification is permitted for use. Refer to the CFM Non-Destructive Test Manual (CFM-TP-NT.11), Borescope Inspection, Part 7, for requirements.

CAUTION: MAKE SURE THAT THE POWER SWITCH IS IN THE OFF POSITION AND THE LIGHT INTENSITY CONTROL IS SET AT MINIMUM BEFORE YOU CONNECT THE LIGHT SOURCE TO THE POWER SUPPLY. MAKE SURE THE LIGHT SOURCE AND THE POWER SUPPLY ARE CORRECTLY ATTACHED TO A GROUND. DAMAGE TO THE EQUIPMENT CAN OCCUR.

(a) Connect the applicable light source to a power source that is grounded.

(b) You will use these borescope tools to do a complete borescope inspection of the engine:

NOTE: For more data on the use of this borescope equipment, refer to CFM NDTM 72-00-00, Part 7.

It is not recommended to do a borescope inspection at temperatures more than 150 degrees F (65.6 degrees C). You can do a dry motor to increase the engine cool down rate.

1) The applicable borescope and light source
   a) Rigid Borescope, COM-2195 and light source, SPL-4305
   b) Rigid Borescope, COM-4302 and light source, SPL-4306
   c) Rigid Borescope, COM-4303 and light source, SPL-2197
   d) Rigid Borescope, COM-4304 and light source, SPL-4308
   e) alternative light source, SPL-4307
2) The monitor, MSE-64
3) The fiber borescope, COM-2196 to do the inspection of these areas:
   a) The combustion chamber
   b) The HPT nozzle guide vanes
   c) The HPT blades.
4) The borescope guide kit, SPL-2198 and the borescope guide tube, SPL-2207 to do the inspection of these areas:
   a) The HPT nozzle guide vanes
   b) The HPT blades.

BOEING PROPRIETARY - Copyright © Unpublished Work - See title page for details

MECH	INSP

SUBTASK 72-00-00-210-001-F00

(6) If it is necessary to index the N2 rotor, do this task: Find the Zero Index Mark on the N2 Rotor, AMM TASK 72-00-00-980-802-F00.

NOTE: It is recommended that you stop the N2 rotor when you put each blade in position for inspection. This will permit you to do a full inspection of each blade.

SUBTASK 72-00-00-210-002-F00

(7) If it is necessary to turn or index the N1 rotor, do these steps:

(a) Put a protective mat, STD-585 in the inlet cowl.

(b) Find the number one fan blade.

NOTE: The fan blade 1 is adjacent to a machined dimple in the aft area of the rear spinner cone.

(c) Use a marker, G02481 [CP2801] to make a mark to identify the number one fan blade (AMM TASK 70-10-03-910-801-F00).

(d) Align the leading edge of the number one fan blade with the T12 temperature sensor.

NOTE: The T12 temperature sensor is approximately at the 10:30 o'clock position as you look in the inlet cowl.

SUBTASK 72-00-00-210-129-F00

(8) Do a general visual inspection of the primary plug assembly for oil puddling.

NOTE: An oil puddle in the exhaust system can occur after the engine is dry or wet motored (refer to task 71–71–00–200–801–F00).

SUBTASK 72-00-00-100-016-F00

(9) If oil puddling is found, remove the oil from the primary plug:

(a) Clean oil from the surface with a lint-free cloth, G01043. A vacuum, STD-10711 can be used to remove unwanted oil.

——— END OF TASK ———

BOEING PROPRIETARY - Copyright © Unpublished Work - See title page for details

TASK 72-00-00-200-818-F00

MECH	INSP

2. HPT Nozzle Guide Vanes Borescope Inspection (Tech Insertion (/3) and CFM56-7BE Engines)
(Figure 3, Figure 4 and Figure 5)

A. General

(1) This task provides the steps on how to do the borescope inspection of the HPT nozzle guide vanes for Tech Insertion (/3) and CFM56-7BE engines.

B. Prepare for the Inspection

SUBTASK 72-00-00-840-030-F00

(1) If not already done, do this task: Borescope Inspection Preparation, TASK 72-00-00-200-802-F00.

SUBTASK 72-00-00-210-123-F00

(2) Make sure that you verify the version of the CFM56 engine on the data placard.

NOTE: The newest version of the CFM56-7B series engine is the CFM56-7BEXX engine. The “XX” in CFM56-7BXX/3 is the thrust rating of the engine. This information is found on the engine data placard on the engine fan case.

NOTE: A Tech Insertion (TI) engine has a “/3” after the thrust rating on the engine data plate. An example of a Singular Annular Combustor (SAC) Engine with TI is CFM56-7B22/3. An example of a non-TI engine is CFM56-7B22. The “XX” in CFM56-7BXX/3 is the thrust rating of the engine. This information is found on the engine data placard on the engine fan case.

SUBTASK 72-00-00-010-040-F00

(3) Remove the S13 and S15 borescope plugs (Figure 6 and Figure 7).

NOTE: To do an initial inspection, it is only necessary to remove the S13 and S15 borescope plugs. If you find damage, you must remove the main igniter plugs and the other borescope plugs to do a complete inspection.

SUBTASK 72-00-00-020-012-F00

(4) If you find damage from the initial inspection, do these steps to remove the main igniter plugs and the other borescope plugs:

NOTE: The port for the 4:00 o'clock main igniter plug is referred to as the S10 borescope port. The port for the 8:00 o'clock main igniter plug is referred to as the S11 borescope port.

(a) Do this task: Main Igniter Plug Removal, AMM TASK 74-21-02-000-801-F00.

(b) Remove the S12 and S14 borescope plugs.

SUBTASK 72-00-00-840-031-F00

(5) Do these steps to prepare for the inspection of the HPT nozzle (Figure 3, Figure 4):

(a) Connect the applicable borescope to the light source.

1) Rigid Borescope, COM-2195 and light source, SPL-4305
2) Rigid Borescope, COM-4302 and light source, SPL-4306
3) Rigid Borescope, COM-4303 and light source, SPL-2197
4) Rigid Borescope, COM-4304 and light source, SPL-4308

BOEING PROPRIETARY - Copyright © Unpublished Work - See title page for details

5) Use the rigid borescope with the black band.

(b) Put the rigid borescope through the borescope port.

(c) Turn the light source ON.

SUBTASK 72-00-00-480-034-F00

(6) If a complete inspection of the nozzle convex side is necessary, do the steps that follow (Figure 3, Figure 4):

NOTE: This inspection is only necessary if you find an indication of damage on the convex side during the initial or complete inspection with the rigid probes.

(a) Connect the borescope, COM-2196 to the applicable light source.

(b) Put the borescope guide kit, SPL-2198 or borescope guide tube, SPL-2207 into the borescope port.

1) Use the borescope guide kit, SPL-2198 to do the inspection of the leading edge and the concave surfaces.

2) Use the borescope guide tube, SPL-2207 to do the inspection of the convex surfaces.

(c) Put the fiberscope through the guide tube.

(d) Make sure that you adjust the borescope correctly.

(e) Turn the lightsource ON.

C. HPT Nozzle Guide Vanes Borescope Inspection

SUBTASK 72-00-00-220-008-F00

(1) Examine the leading edges of the 42 HPT nozzle guide vanes as follow:

NOTE: To estimate the size of distress, use the applicable visual aid. To find distress locations relative to specific rows, refer to the applicable figure.

NOTE: The airfoil baffle is visible inside the airfoil when missing material occurs. It is sheet metal with cooling holes.

(a) Cracks that connect nose holes

1) There is no limit to the number with these conditions:

a) The cracks are not longer than 0.3 inch (7.60 mm).

b) There is no missing material.

2) Do the inspection again after each 800 cycle interval with these conditions:

a) The cracks are not longer than 0.3 inch (7.60 mm).

b) The total area of missing material is not more than 0.25 square inch (161 square mm) per vane. Maximum of 4 vanes per 90° arc.

c) Missing material does not extend aft of rows 3 or 9.

3) Do the inspection again after each 400 cycle interval with these conditions:

a) The cracks are not more than 1 inch (25.4 mm) in length.

b) The total area of missing material is not more than 0.25 square inch (161 square mm) per vane. Maximum of 4 vanes per 90° arc.

c) Missing material does not extend aft of rows 3 or 9.

BOEING PROPRIETARY - Copyright © Unpublished Work - See title page for details

4) The Continue-In-Service limit is 25 cycles with this condition:

a) The area of missing material is not more than 0.3 square inch (193 square mm) per vane. Maximum of 4 vanes per 90° arc.

(b) Other cracks

1) There is no limit to the number with these conditions:

a) The cracks are not longer than 0.5 inch (12.7 mm).

b) There is no missing material.

2) Do the inspection again after each 800 cycle interval with these conditions:

a) The cracks are not longer than 0.5 inch (12.7 mm).

b) The total area of missing material is not more than 0.25 square inch (161 square mm) per vane. Maximum of 4 vanes per 90° arc.

c) Missing material does not extend aft of rows 3 or 9.

3) Do the inspection again after each 400 cycle interval with these conditions:

a) The cracks are not more than 1 inch (25.4 mm) in length.

b) The total area of missing material is not more than 0.25 square inch (161 square mm) per vane. Maximum of 4 vanes per 90° arc.

c) Missing material does not extend aft of rows 3 or 9.

4) The Continue-In-Service limit is 25 cycles with this condition:

a) The area of missing material is not more than 0.3 square inch (193 square mm) per vane. Maximum of 4 vanes per 90° arc.

(c) Burns or spalled areas

1) There is no limit to the number with this condition:

a) The area of missing material is not more than 0.15 square inch (97 square mm) per vane. Maximum of 4 vanes per 90° arc.

2) Do the inspection again after each 800 cycle interval with these conditions:

a) The total area of missing material is not more than 0.25 square inch (161 square mm) per vane. Maximum of 4 vanes per 90° arc.

b) Missing material does not extend aft of rows 3 or 9.

3) The Continue-In-Service limit is 25 cycles with this condition:

a) The area of missing material is not more than 0.3 square inch (193 square mm) per vane. Maximum of 4 vanes per 90° arc.

(d) Baffle missing material

1) Not Permitted

2) The Continue-In-Service limit is 25 cycles with this condition:

a) The area of missing material is equivalent to a rectangle defined by 4 adjacent holes.

SUBTASK 72-00-00-220-009-F00

(2) Examine the concave surfaces as follow:

(a) Radial cracks that extend from the gill holes

BOEING PROPRIETARY - Copyright © Unpublished Work - See title page for details

MECH	INSP

1) Permitted if there is no missing material.
2) Do the inspection again after each 400 cycle interval with these conditions:
   a) The missing material, cause by cracks, is not more than 0.04 square inch (25.81 square mm).
   b) No more than 4 airfoils for each engine have missing material caused by cracks.
3) The Continue-In-Service limit is 25 cycles with this condition:
   a) The missing material caused by cracks is not larger than 0.45 square inch (290 square mm).

(b) Other cracks (not in the gill hole rows)
1) Permitted if there is no missing material.
2) Do the inspection again after each 400 cycle interval with these conditions:
   a) The missing material, cause by cracks, is not more than 0.04 square inch (25.81 square mm).
   b) No more than 4 airfoils for each engine have missing material caused by cracks.
3) The Continue-In-Service limit is 25 cycles with this condition:
   a) The missing material, caused by cracks, is not more than 0.45 square inch (290 square mm).

(c) Burns
1) There is no limit to the quantity with this condition:
   a) There is no burn-through into the inner cooling passages.
2) The Continue-In-Service limit is 25 cycles with this condition:
   a) The area which is burned through is not larger than 0.45 square inch (290 square mm) on each vane.

(d) Missing thermal barrier coating (TBC)
1) There is no limit to the quantity of TBC that can be missing.

SUBTASK 72-00-00-220-010-F00

(3) Examine the convex surfaces as follow:

NOTE: To find distress location relative to specific rows, refer to the applicable figure.

(a) Radial or axial cracks
1) Permitted if there is no missing material.
2) If there is missing material, do the inspection again after each 800 cycle interval with these conditions:
   a) The total area of missing material is not more than 0.05 square inch (39.1 square mm) per vane. Maximum of 4 vanes per 90° arc.
   b) Cracking does not occur aft of cooling hole row 16.
3) The Continue-In-Service limit is 25 cycles with this condition:

BOEING PROPRIETARY - Copyright © Unpublished Work - See title page for details

a) The missing material caused by cracks is not larger than 0.45 square inch (290 square mm).

(b) Burns or bulges

NOTE: An open area of the cavity caused by bulging is to be interpreted as missing material where the limits that follow apply.

1) Permitted if there is no missing material.

2) If there is missing material, do the inspection again after each 800 cycle interval with these conditions:

a) The total area of missing material is not more than 0.05 square inch (39.1 square mm) per vane. Maximum of 4 vanes per 90° arc.

b) Bulging does not occur aft of cooling hole row 16.

3) The Continue-In-Service limit is 25 cycles with this condition:

a) The missing material caused by cracks is not larger than 0.45 square inch (290 square mm).

(c) Missing thermal barrier coating (TBC)

1) Permitted

SUBTASK 72-00-00-220-011-F00

(4) Examine the trailing edges as follow:

(a) Cracks or burns

1) Permitted

(b) Buckled or bowed material

1) Permitted

(c) Missing material

1) The maximum quantity of missing material from each vane is 0.5 inches (12.7 mm) length in the axial direction.

2) The Continue-In-Service limit is 25 cycles with these conditions:

a) The missing material is not longer than 0.75 inches (19.05 mm) in the axial direction.

b) Make sure that the HPT blades must be in limits (AMM TASK 72-00-00-200-807-F00).

SUBTASK 72-00-00-211-002-F00

(5) Examine all airfoil surfaces as follow:

(a) Craze cracks

NOTE: Craze cracks look like many surface cracks that do not have visual width or depth.

1) Permitted.

(b) Nicks, marks, scratches, and dents

1) Permitted.

(c) Metal splatter

BOEING PROPRIETARY - Copyright © Unpublished Work - See title page for details

MECH	INSP

1) Permitted.

SUBTASK 72-00-00-211-003-F00

(6) Examine the inner and outer platforms as follow:

(a) Cracks in the parent metal

1) Permitted.

(b) Missing metal or burning of parent metal

1) There is no limit of missing metal or burning of parent metal with no through holes.

2) Do the inspection again after 400 cycle interval with these conditions:

a) The through hole is in or less than 1 inch (25.4mm) of the leading edge of the inner or outer platform.

b) The through hole is not more than 0.06 square inch (38.71 square mm).

c) No more than 4 segments for each engine have through holes on the inner or outer platform.

3) The Continue-In-Service limit is 25 cycles with this condition:

a) Through hole is not more than 0.12 square inch (77.42 square mm).

(c) Nicks, scores, scratches and dents on the platform surface

1) Permitted.

(d) Bulges and bowing

1) Permitted.

(e) Cracks in the braze joints of the airfoil-to-platform surfaces

1) Permitted with this condition:

a) Separation of the braze joint is not permitted, unless it was caused by burning.

D. Put the Airplane Back to Its Usual Condition

SUBTASK 72-00-00-410-034-F00

(1) Do these steps to install the borescope plugs:

(a) Lubricate the threads of the borescope plugs with pure nickel special compound, D50034 [CP2619], milk of magnesia compound, D50032 [CP1064] or graphite compound, D00601 [CP2101].

(b) Install the borescope plugs.

1) Tighten each borescope plug to 57-63 pound-inches (6.4-7.1 Newton-meters).

I 2) Install safety wire, G02345 [CP8001] or cable, G50065 [CP8006] on each borescope plug.

SUBTASK 72-00-00-410-035-F00

(2) If they were removed, do this task: Main Igniter Plug Installation, AMM TASK 74-21-02-400-801-F00.

BOEING PROPRIETARY - Copyright © Unpublished Work - See title page for details

DATE	TAIL NUMBER	STATION	AIRLINE CARD NO.	BOEING CARD NO.
				72-200-02-02

MECH	INSP

SUBTASK 72-00-00-840-032-F00

(3) If the borescope procedure is complete, do this task: Put the Airplane Back to Its Usual Condition, TASK 72-00-00-200-814-F00.

——— END OF TASK ———

BOEING PROPRIETARY - Copyright © Unpublished Work - See title page for details

MECH	INSP

TASK 72-00-00-200-814-F00

3. Put the Airplane Back to Its Usual Condition

A. General

(1) This task provides the instructions on how to put the airplane back to its usual condition after an inspection.

B. Put the Airplane Back to Its Usual Condition

SUBTASK 72-00-00-080-009-F00

CAUTION: MAKE SURE THERE ARE NO TOOLS, PARTS, OR OTHER UNWANTED MATERIAL IN THE INLET COWL. IF YOU DO NOT OBEY THESE INSTRUCTIONS, YOU CAN CAUSE DAMAGE TO THE ENGINE.

(1) Remove the protective mat, STD-585 from the inner surface of the inlet cowl.

SUBTASK 72-00-00-210-100-F00

(2) Disassemble the borescope equipment as follows:

(a) Turn the light source to OFF.

1) Keep the blower ON until the lamp and case are cool.

(b) Make sure that the power switch is OFF.

(c) Make sure that the light intensity control is set to minimum.

(d) Disconnect the power supply and the ground.

(e) Disconnect the extension and the viewer from the borescope.

(f) Disconnect the borescope from the fiber light cable.

(g) Disconnect the fiber light cable from the light source.

SUBTASK 72-00-00-210-101-F00

CAUTION: MAKE SURE THAT YOU INSTALL THE COVER ON THE GEARBOX. IF YOU DO NOT INSTALL THE COVER, ENGINE OIL LEAKS CAN OCCUR DURING OPERATION AND ENGINE DAMAGE CAN OCCUR.

(3) If not already done, do this task: Handcranking Drive Cover Installation, AMM TASK 72-63-01-400-801-F00.

SUBTASK 72-00-00-410-045-F00

WARNING: OBEY THE INSTRUCTIONS IN THE PROCEDURE TO CLOSE THE THRUST REVERSERS. IF YOU DO NOT OBEY THE INSTRUCTIONS, INJURIES TO PERSONS AND DAMAGE TO EQUIPMENT CAN OCCUR.

(4) Do these tasks in sequence to safely close the left and right thrust reversers:

(a) Do this task: Close the Thrust Reverser (Selection), AMM TASK 78-31-00-010-804-F00.

(b) Do this task: Close the Fan Cowl Panels, AMM TASK 71-11-02-410-801-F00.

(c) Do this task: Thrust Reverser Activation after Ground Maintenance, AMM TASK 78-31-00-440-803-F00.

BOEING PROPRIETARY - Copyright © Unpublished Work - See title page for details

DATE	TAIL NUMBER	STATION	AIRLINE CARD NO.	BOEING CARD NO.
				72-200-02-02

MECH	INSP

SUBTASK 72-00-00-860-078-F00

(5) For Engine 1, remove the safety tag and close this circuit breaker:

CAPT Electrical System Panel, P18-2

Row	Col	Number	Name
B	8	C01103	ENGINE 1 START VALVE

SUBTASK 72-00-00-860-079-F00

(6) For Engine 2, remove the safety tag and close this circuit breaker:

F/O Electrical System Panel, P6-2

Row	Col	Number	Name
C	4	C00154	ENGINE 2 START VALVE

SUBTASK 72-00-00-860-006-F00

(7) On the applicable engine, remove the DO-NOT-OPERATE tag from the start lever.

——— END OF TASK ———

BOEING PROPRIETARY - Copyright © Unpublished Work - See title page for details

DATE	TAIL NUMBER	STATION	AIRLINE CARD NO.	BOEING CARD NO.
				72-200-02-02

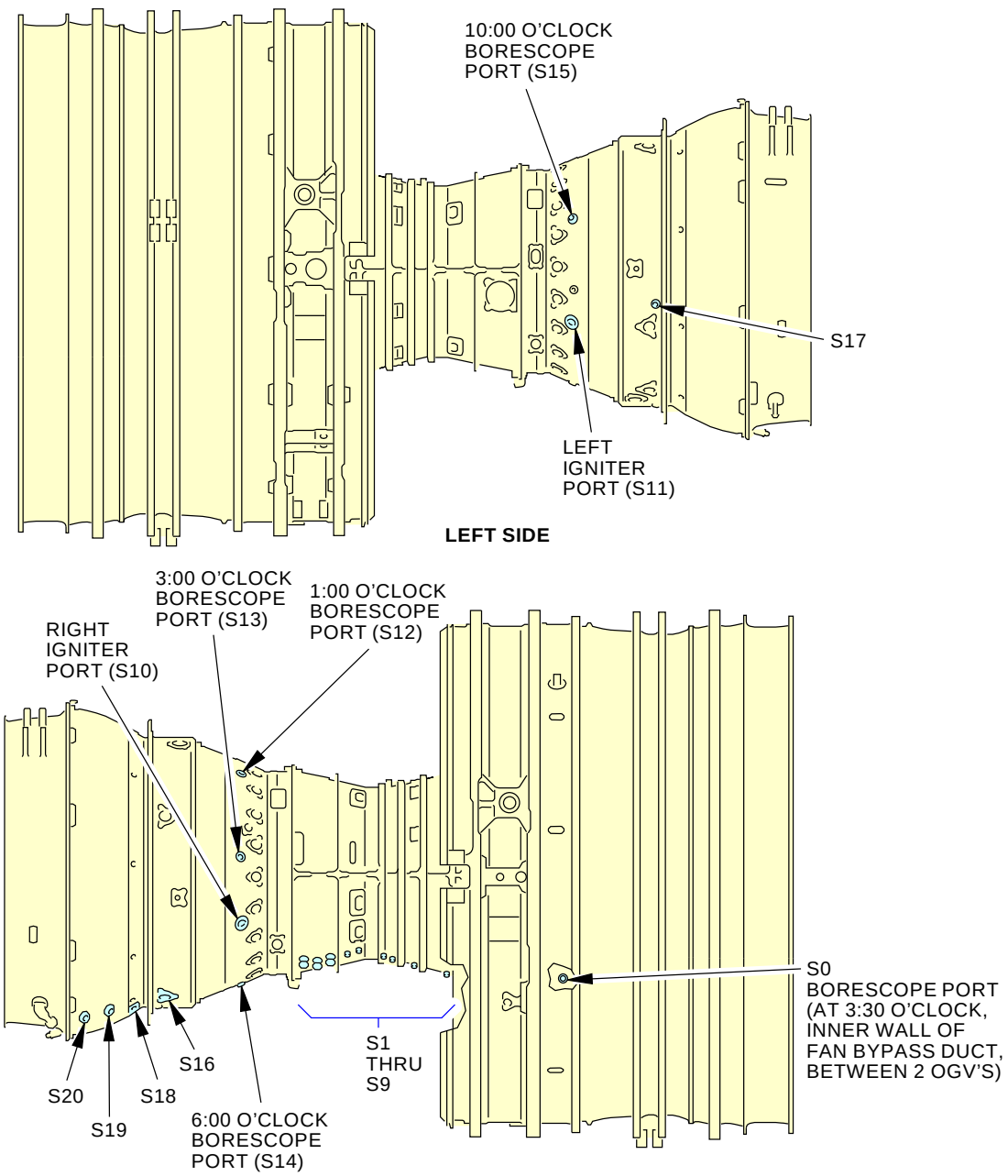

NOTE:

SOME ENGINE COMPONENTS
REMOVED FOR CLARITY.

S-M56-MM-03504-00-B
H50646 S0006582226_V2

Borescope Port Locations
Figure 1

BOEING PROPRIETARY - Copyright © Unpublished Work - See title page for details

DATE	TAIL NUMBER	STATION	AIRLINE CARD NO.	BOEING CARD NO.
				72-200-02-02

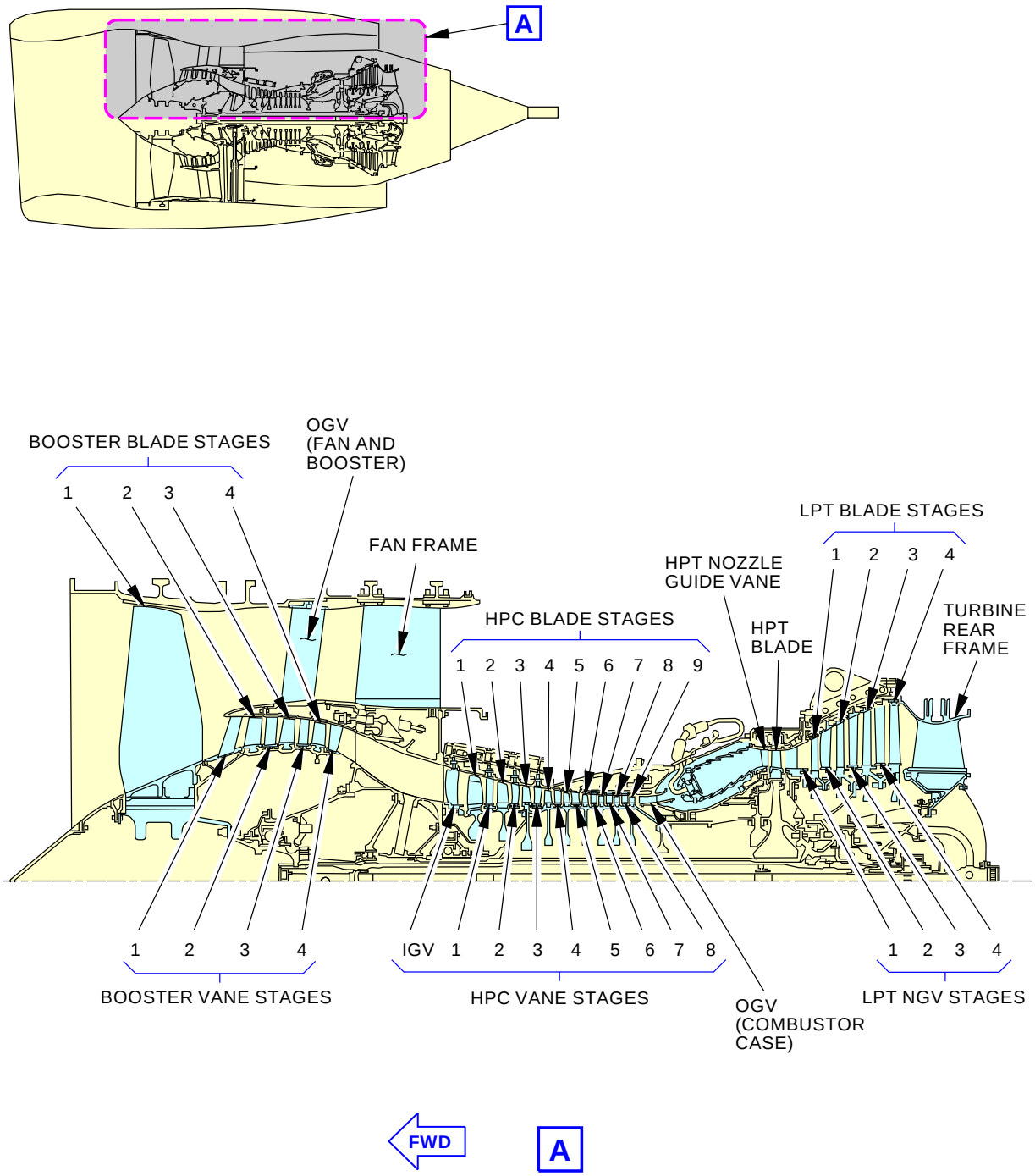

G47263 S0006582229_V3

Engine Airfoil Count
Figure 2 (Sheet 1 of 2)

BOEING PROPRIETARY - Copyright © Unpublished Work - See title page for details

NOMENCLATURE	STAGE	NUMBER OF BLADES
FAN AND BOOSTER	1	24
	2	74
	3	78
	4	74
HIGH PRESSURE COMPRESSOR (HPC)	1	38
	2	53
	3	60
	4	68
	5	75
	6	82
	7	82
	8	80
	9	76
HIGH PRESSURE TURBINE (HPT) NON-7BE ENGINE		80
HIGH PRESSURE TURBINE HPT 7BE ENGINE		76
LOW PRESSURE TURBINE (LPT) NON-7BE ENGINE	1	162
	2	150
	3	150
	4	134
LOW PRESSURE TURBINE LPT 7BE ENGINE	1	154
	2	134
	3	136
	4	138

G48151 S0006582230_V4

Engine Airfoil Count
Figure 2 (Sheet 2 of 2)

BOEING PROPRIETARY - Copyright © Unpublished Work - See title page for details

DATE	TAIL NUMBER	STATION	AIRLINE CARD NO.	BOEING CARD NO.
				72-200-02-02

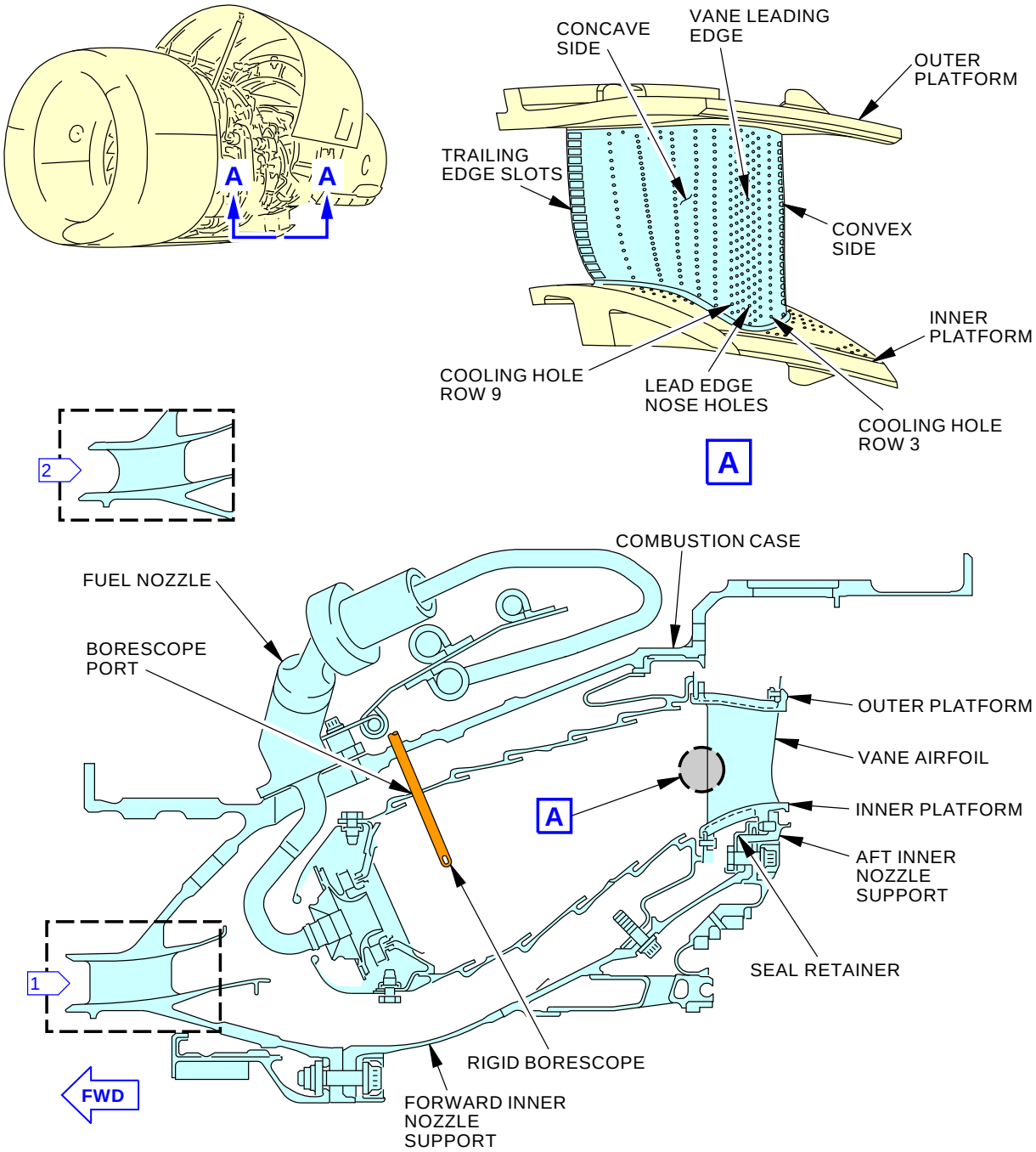

HPT Nozzle Guide Vanes Borescope Inspection
Figure 3

BOEING PROPRIETARY - Copyright © Unpublished Work - See title page for details

DATE	TAIL NUMBER	STATION	AIRLINE CARD NO.	BOEING CARD NO.
				72-200-02-02

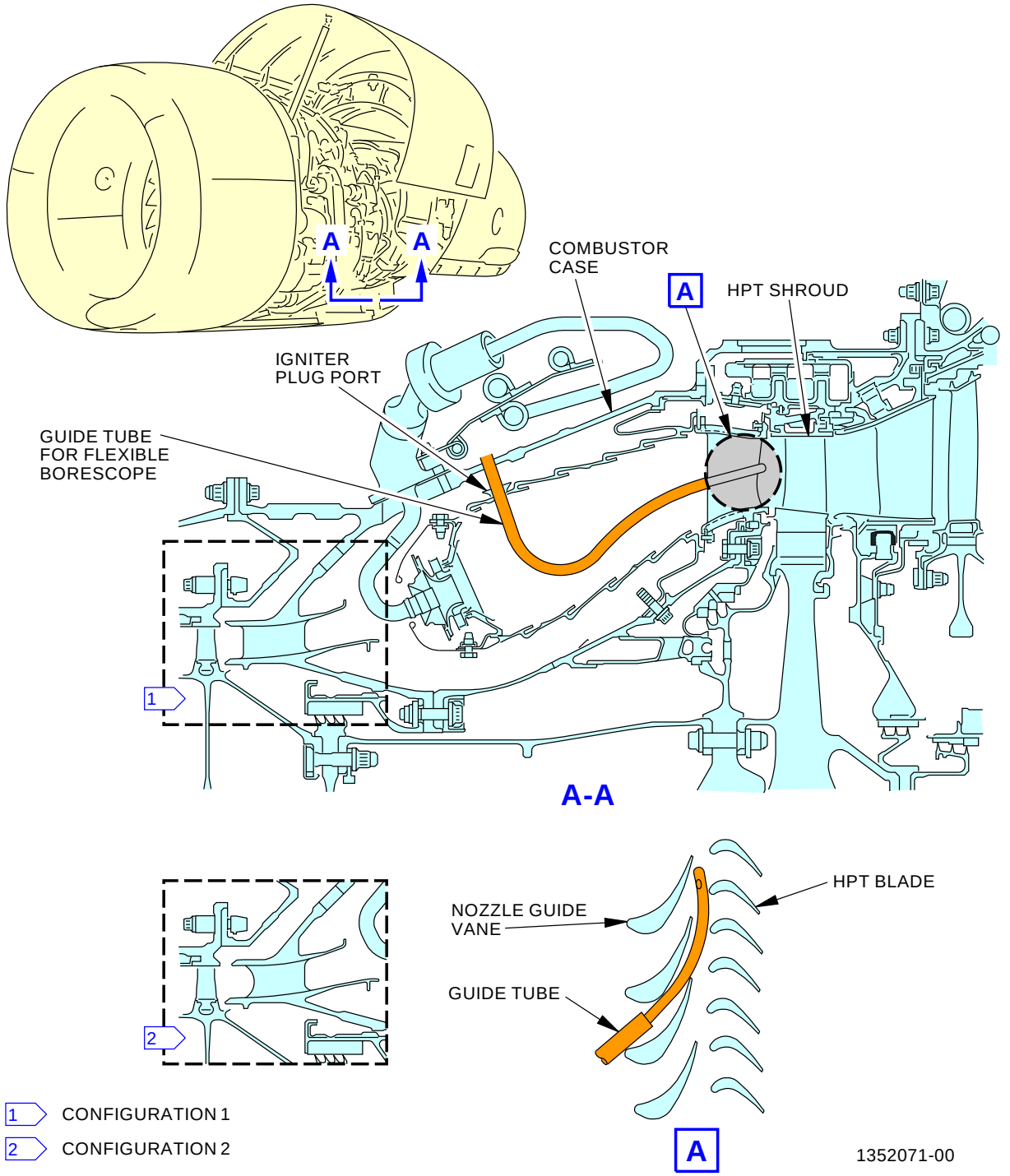

HPT Nozzle Guide Vanes (With Flexible) Borescope Inspection
Figure 4

BOEING PROPRIETARY - Copyright © Unpublished Work - See title page for details

DATE	TAIL NUMBER	STATION	AIRLINE CARD NO.	BOEING CARD NO.
				72-200-02-02

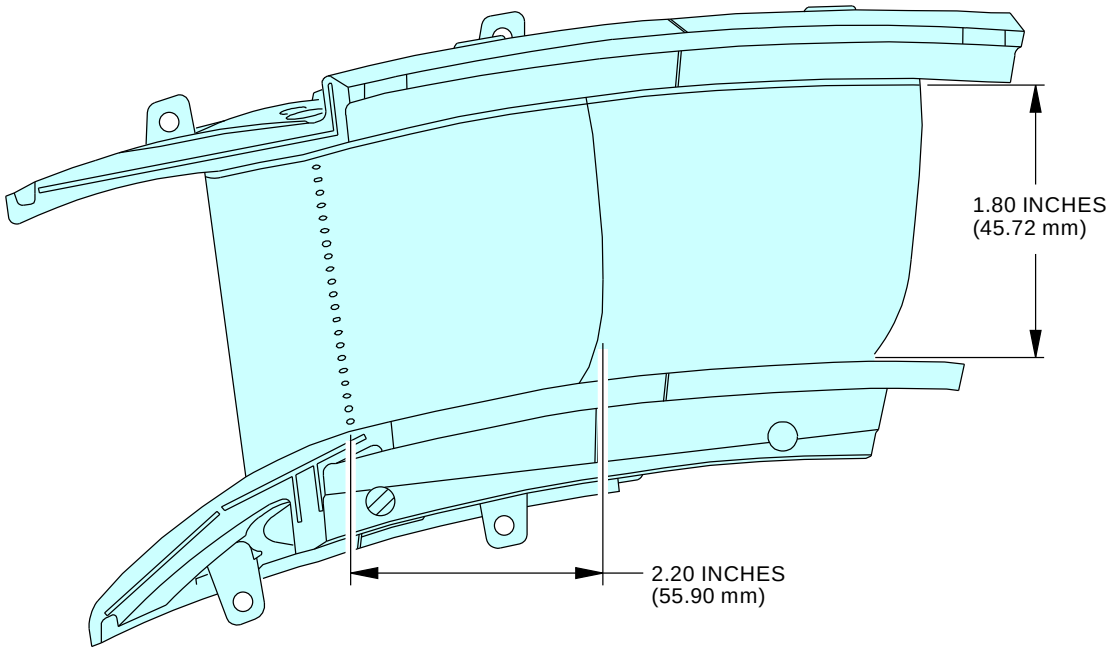

NOTE:

0.09 INCH (2.28 mm) IS THE DISTANCE
BETWEEN COOLING HOLE CENTERLINE.

1218758-00-A
374095 S0000132048_V2

HPT NGV Dimensional Inspection
Figure 5 (Sheet 1 of 3)

BOEING PROPRIETARY - Copyright © Unpublished Work - See title page for details

DATE	TAIL NUMBER	STATION	AIRLINE CARD NO.	BOEING CARD NO.
				72-200-02-02

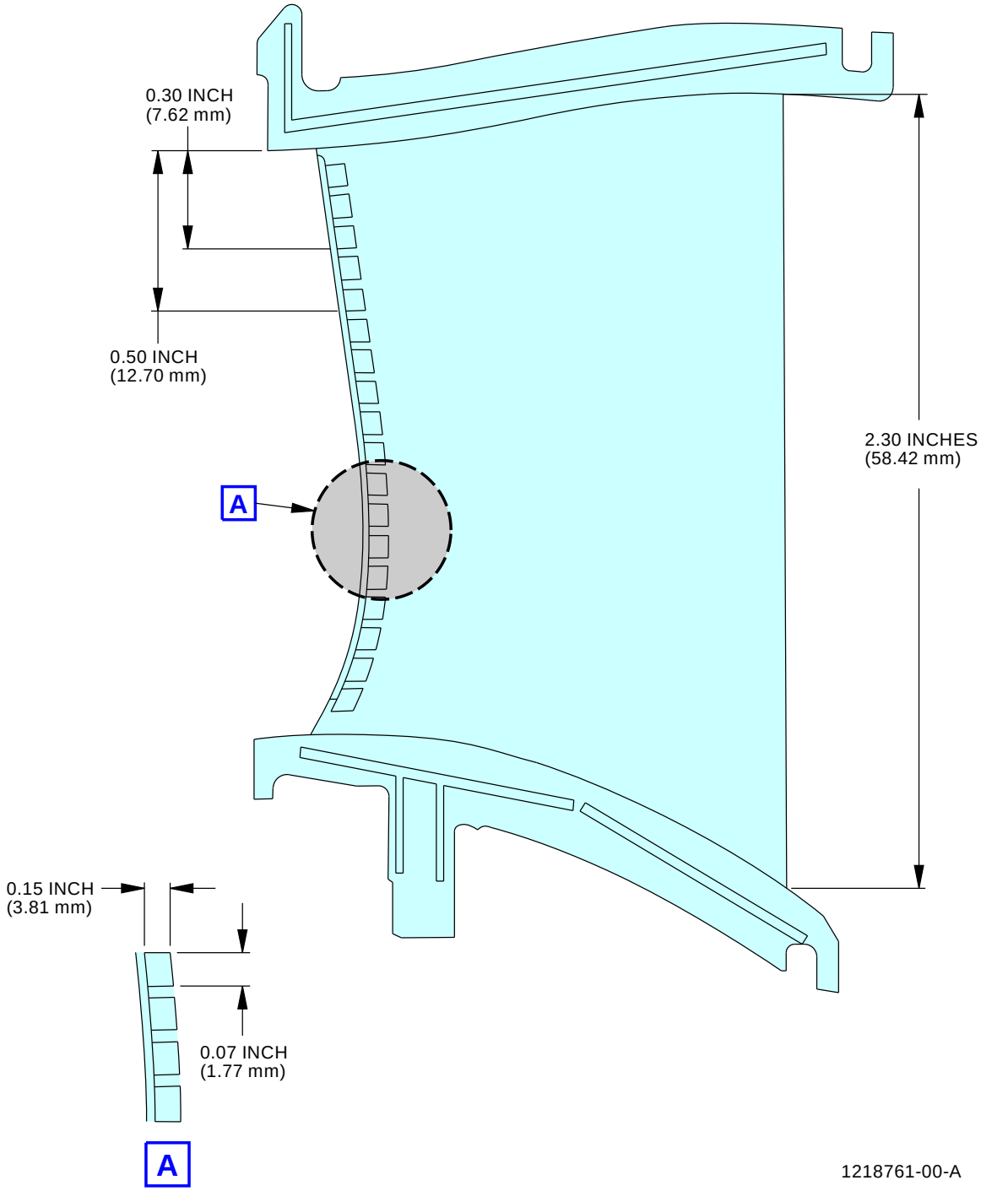

HPT NGV Dimensional Inspection
Figure 5 (Sheet 2 of 3)

BOEING PROPRIETARY - Copyright © Unpublished Work - See title page for details

DATE	TAIL NUMBER	STATION	AIRLINE CARD NO.	BOEING CARD NO.
				72-200-02-02

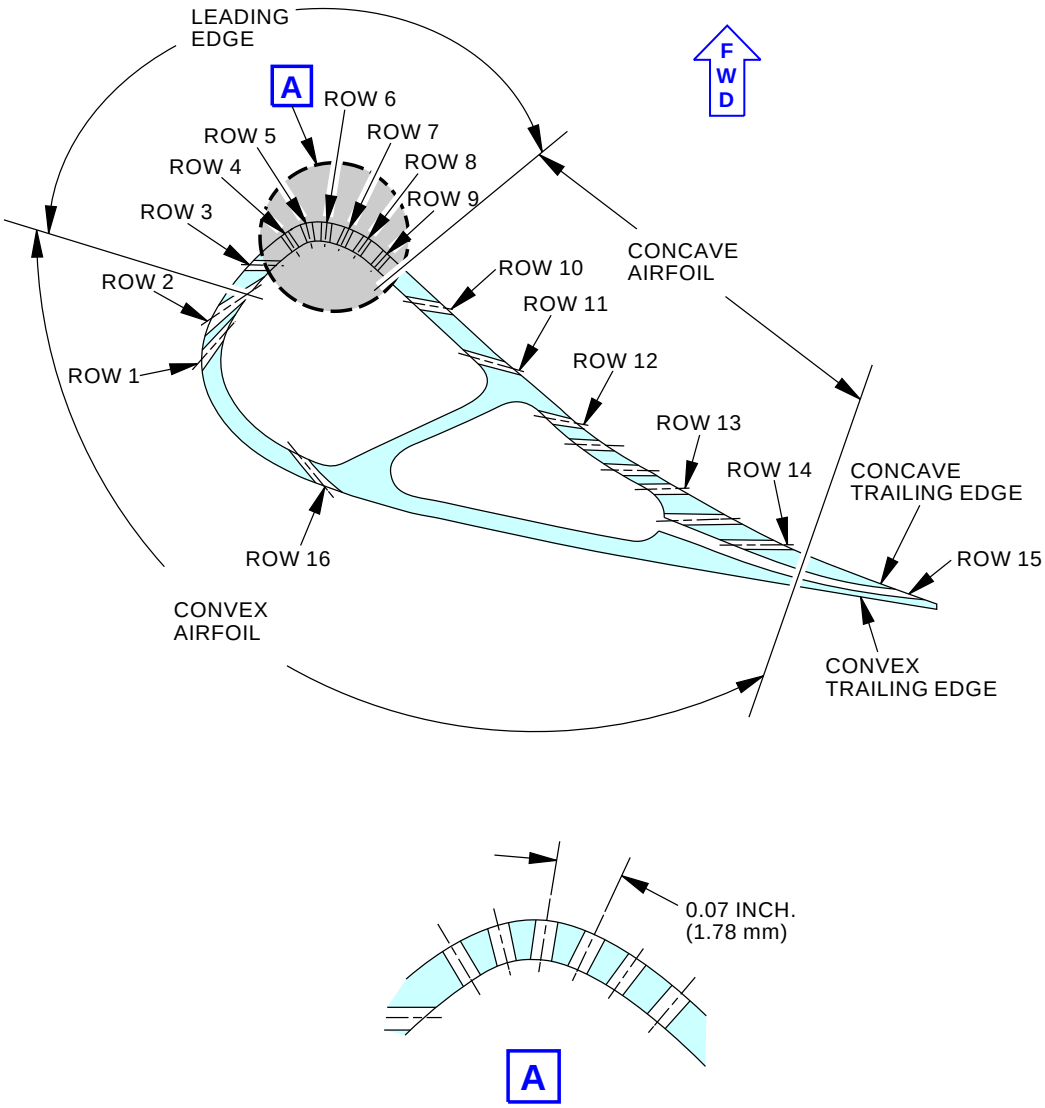

1295200-00
1987630 S0000386042_V2

HPT NGV Dimensional Inspection
Figure 5 (Sheet 3 of 3)

BOEING PROPRIETARY - Copyright © Unpublished Work - See title page for details

DATE	TAIL NUMBER	STATION	AIRLINE CARD NO.	BOEING CARD NO.
				72-200-02-02

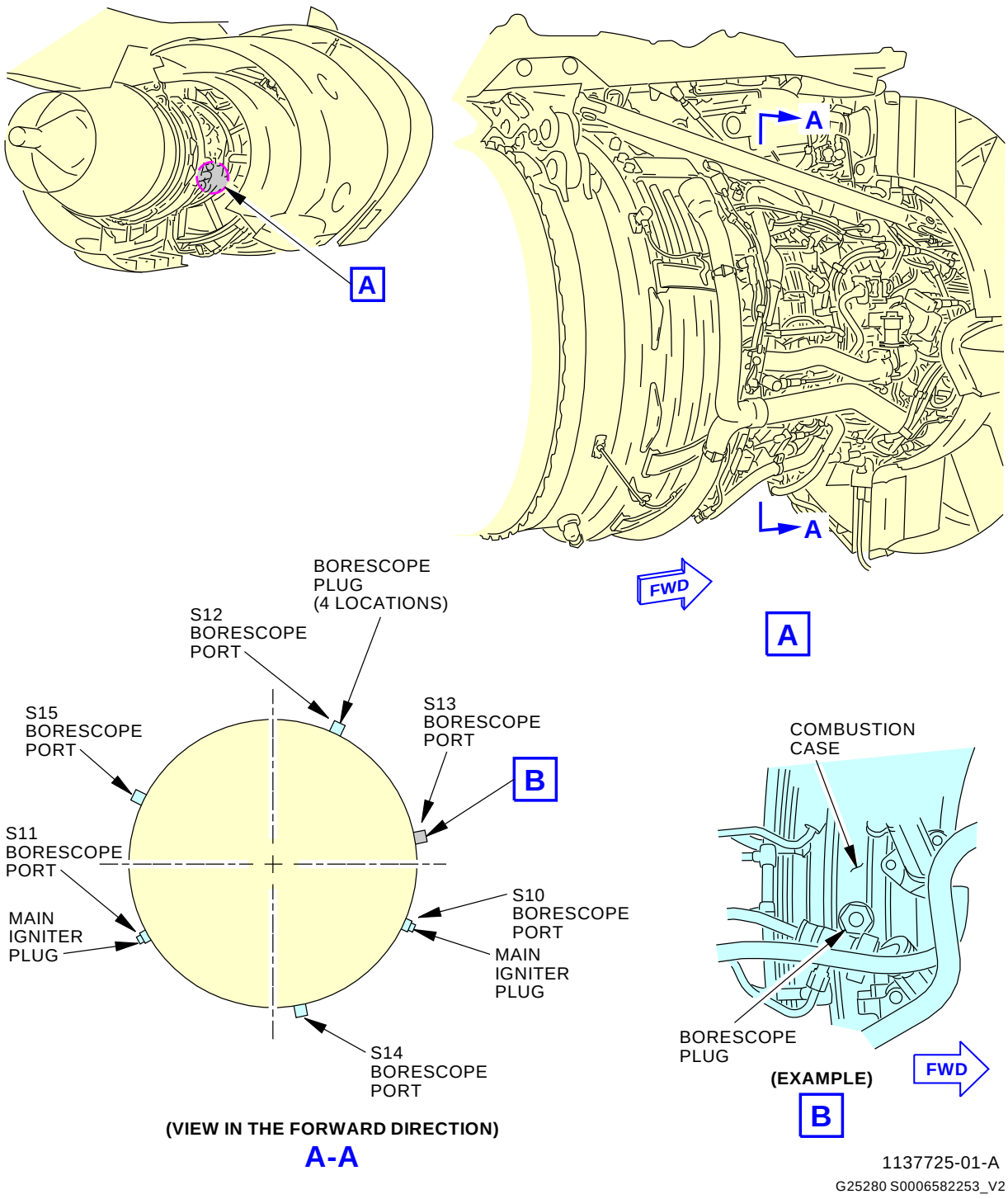

Combustion Chamber Borescope Port Locations
Figure 6

BOEING PROPRIETARY - Copyright © Unpublished Work - See title page for details

DATE	TAIL NUMBER	STATION	AIRLINE CARD NO.	BOEING CARD NO.
				72-200-02-02

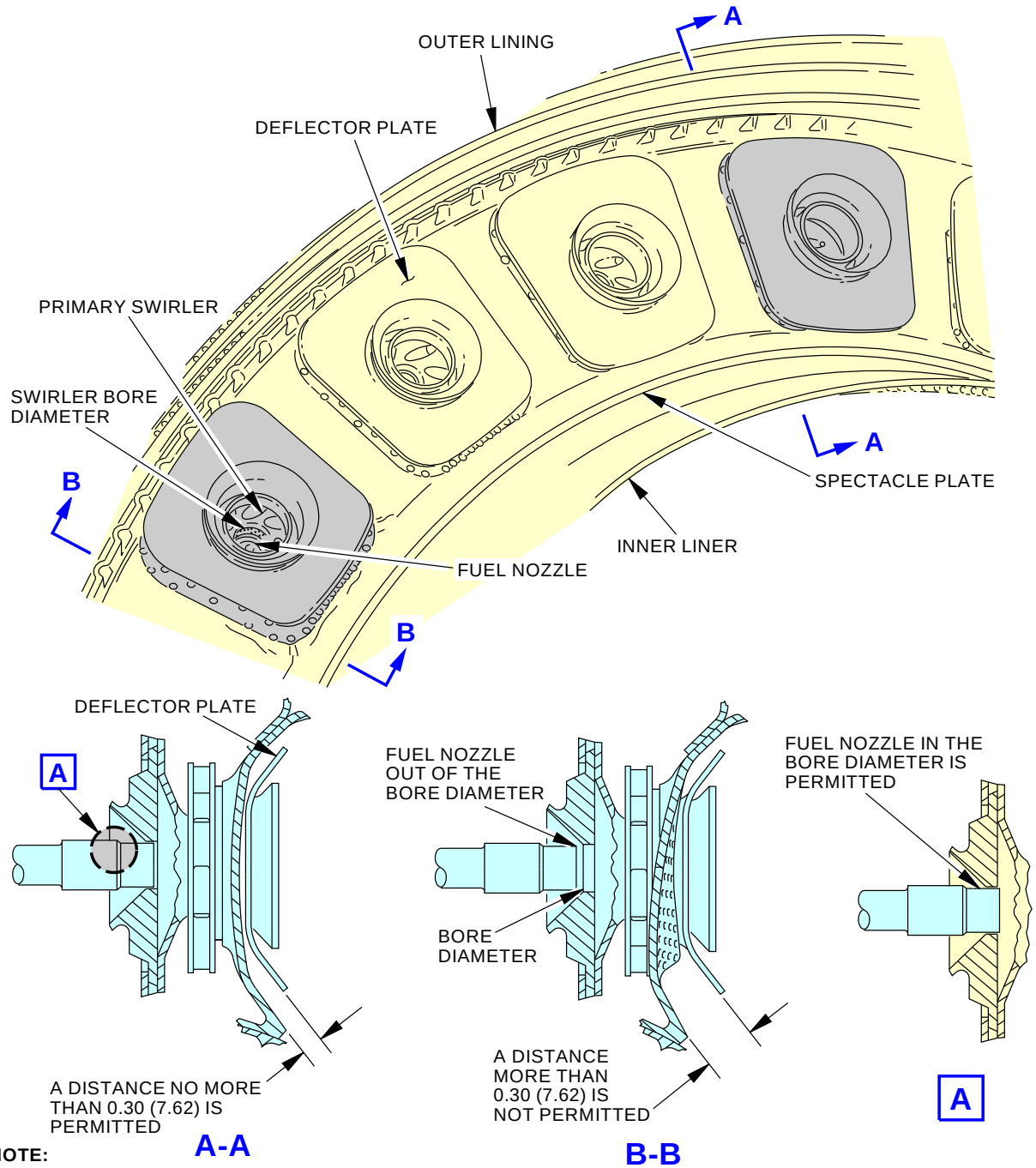

NOTE:

ALL DIMENSIONS ARE IN INCHES WITH MILLIMETERS IN PARENTHESES.

GMM-1096836-00-B
L35434 S0006582261_V2

After Bird Strike Combustion Section Borescope Inspection
Figure 7

BOEING PROPRIETARY - Copyright © Unpublished Work - See title page for details

AIRLINE CARD NO		TITLE			BOEING CARD NO.
		LEFT ENGINE HPT BLADES			72-210-01-01
DATE	TASK				RELATED CARD
	INSPECTION - DETAILED				
TAIL NUMBER	WORK AREA	VERSION	THRESHOLD	REPEAT	APPLICABILITY
	LEFT ENGINE	1.1 1.2	6600 FC 15000 FH	1600 FC 4000 FH	AIRPLANE: ALL ENGINE: ALL
STATION	SKILL				
	ENGIN				
		ACCESS			ZONE
		415 416			411

Borescope inspection of the left engine HPT blades.

A. References

Reference	Title
AMM 70-10-03-910-801-F00	Temporary Marking Procedures (P/B 201)
AMM 71-11-02-010-801-F00	Open the Fan Cowl Panels (P/B 201)
AMM 71-11-02-410-801-F00	Close the Fan Cowl Panels (P/B 201)
AMM 72-00-00-980-801-F00	Turn the N2 Rotor (P/B 201)
AMM 72-00-00-980-802-F00	Find the Zero Index Mark on the N2 Rotor (P/B 201)
AMM 72-63-01-400-801-F00	Handcranking Drive Cover Installation (P/B 201)
AMM 74-21-02-000-801-F00	Main Igniter Plug Removal (P/B 401)
AMM 74-21-02-400-801-F00	Main Igniter Plug Installation (P/B 401)
AMM 78-31-00-010-801-F00	Open the Thrust Reverser (Selection) (P/B 201)
AMM 78-31-00-010-804-F00	Close the Thrust Reverser (Selection) (P/B 201)
AMM 78-31-00-040-802-F00	Thrust Reverser Deactivation For Ground Maintenance (P/B 201)
AMM 78-31-00-440-803-F00	Thrust Reverser Activation After Ground Maintenance (P/B 201)

B. Consumable Materials

Reference	Description	Specification
D00601 [CP2101]	High-temperature graphite compound	SAE AMS 2518
D50032 [CP1064]	Compound - Antiseize - Milk of Magnesia	
D50034 [CP2619]	Compound - Antiseize - Pure Nickel Special, Never - Seez	CFM CP2619
G01043	Cloth - Lint-free	
G02345 [CP8001]	Wire - Safety, 0.032 Inch (0.8 mm) Diameter	CFM CP8001, AMS 5687
G02481 [CP2801]	Marker - Temporary	
G50065 [CP8006]	Cable, Safety, Stainless Steel, 0.032 inch (0.813 mm) Diameter	M50 TF 9 CL-A

BOEING PROPRIETARY - Copyright © Unpublished Work - See title page for details

DATE	TAIL NUMBER	STATION	AIRLINE CARD NO.	BOEING CARD NO.
				72-210-01-01

C. Tools/Equipment

NOTE: When more than one tool part number is listed under the same "Reference" number, the tools shown are alternates to each other within the same airplane series. Tool part numbers that are replaced or non-procurable are preceded by "Opt:", which stands for Optional.

Reference	Description
COM-2195	Set - Borescope Rigid, Olympus Part #: 856A1320P04 Supplier: 58828
COM-2196	Set - Borescope Fiber, 6 mm diameter Part #: 856A1321P05 Supplier: 58828 Part #: 856A1321P06 Supplier: 58828 Opt Part #: 856A1321P03 Supplier: 58828
COM-4302	Set - Borescope Rigid, Wolf Part #: 856A1320P05 Supplier: 58828
COM-4303	Set - Borescope Rigid, Lenox Part #: 856A1320P06 Supplier: 58828
COM-4304	Set - Borescope Rigid, ITI USA Part #: 856A1320P07 Supplier: 58828
SPL-2197	Light Source - Borescope, Lenox (150W) Part #: 856A1322P02 Supplier: 58828
SPL-2198	Kit - Borescope Guide, HP Turbine, CFM56 Engines Part #: 856A1310G01 Supplier: 58828
SPL-2207	Guide Tube - Borescope, HPT Shroud, CFM56 Engines Part #: 856A1351P01 Supplier: 58828
SPL-4305	Light Source - Borescope, Olympus (150W) Part #: 856A1322P03 Supplier: 58828
SPL-4306	Light Source - Borescope, Wolf (300W) Part #: 856A1322P04 Supplier: 58828
SPL-4307	Light Source - Borescope, Machida Part #: 856A1322P07 Supplier: 58828
SPL-4308	Light Source - Borescope, ITI USA (150W) Part #: 856A1322P08 Supplier: 58828
STD-10711	Shop Vacuum (400Hz if using aircraft power)
STD-585	Mat - Protective, 3/8 Inch (9.5 mm) Minimum Thickness, Minimum 42x60 Inches (1x1.5 meters) with Warning Streamers

BOEING PROPRIETARY - Copyright © Unpublished Work - See title page for details

MECH	INSP

TASK 72-00-00-200-802-F00

1. Borescope Inspection Preparation

(Figure 1 and Figure 2)

A. General

(1) This task provides the instructions on how to prepare for the borescope inspection.

B. Borescope Inspection Preparation

SUBTASK 72-00-00-860-001-F00

(1) For the applicable engine, install a DO-NOT-OPERATE tag on the start lever.

SUBTASK 72-00-00-860-080-F00

(2) For Engine 1, open this circuit breaker and install a safety tag:

CAPT Electrical System Panel, P18-2

Row	Col	Number	Name
B	8	C01103	ENGINE 1 START VALVE

SUBTASK 72-00-00-860-081-F00

(3) For Engine 2, open this circuit breaker and install a safety tag:

F/O Electrical System Panel, P6-2

Row	Col	Number	Name
C	4	C00154	ENGINE 2 START VALVE

SUBTASK 72-00-00-860-082-F00

(4) Do these tasks in sequence to safely open the left and right thrust reversers on the applicable engine:

WARNING: DO THE DEACTIVATION PROCEDURE FOR THE THRUST REVERSER TO PREVENT THE OPERATION OF THE THRUST REVERSER. ACCIDENTAL OPERATION OF THE THRUST REVERSER CAN CAUSE INJURIES TO PERSONS OR DAMAGE TO EQUIPMENT.

(a) Do this task: Thrust Reverser Deactivation for Ground Maintenance, AMM TASK 78-31-00-040-802-F00.

(b) Open the left and right fan cowl panels (AMM TASK 71-11-02-010-801-F00).

WARNING: OBEY THE INSTRUCTIONS IN THE PROCEDURE TO OPEN THE THRUST REVERSERS. IF YOU DO NOT OBEY THE INSTRUCTIONS, INJURIES TO PERSONS AND DAMAGE TO EQUIPMENT CAN OCCUR.

(c) Open the left and right thrust reversers (AMM TASK 78-31-00-010-801-F00).

BOEING PROPRIETARY - Copyright © Unpublished Work - See title page for details

DATE	TAIL NUMBER	STATION	AIRLINE CARD NO.	BOEING CARD NO.
				72-210-01-01

MECH	INSP

SUBTASK 72-00-00-480-001-F00

(5) Refer to the applicable steps and borescope equipment to prepare for the inspection:

NOTE: For this procedure, borescope equipment is used for all inspections but not for the axial preload check of the Stage 4 LPT blades.

NOTE: Refer to the CFM Illustrated Tool and Equipment manual for the current part number for all the borescope equipment.

NOTE: Alternative borescope equipment that is as good or better than the CFM Borescope Specification is permitted for use. Refer to the CFM Non-Destructive Test Manual (CFM-TP-NT.11), Borescope Inspection, Part 7, for requirements.

CAUTION: MAKE SURE THAT THE POWER SWITCH IS IN THE OFF POSITION AND THE LIGHT INTENSITY CONTROL IS SET AT MINIMUM BEFORE YOU CONNECT THE LIGHT SOURCE TO THE POWER SUPPLY. MAKE SURE THE LIGHT SOURCE AND THE POWER SUPPLY ARE CORRECTLY ATTACHED TO A GROUND. DAMAGE TO THE EQUIPMENT CAN OCCUR.

(a) Connect the applicable light source to a power source that is grounded.

(b) You will use these borescope tools to do a complete borescope inspection of the engine:

NOTE: For more data on the use of this borescope equipment, refer to CFM NDTM 72-00-00, Part 7.

It is not recommended to do a borescope inspection at temperatures more than 150 degrees F (65.6 degrees C). You can do a dry motor to increase the engine cool down rate.

1) The applicable borescope and light source
   a) Rigid Borescope, COM-2195 and light source, SPL-4305
   b) Rigid Borescope, COM-4302 and light source, SPL-4306
   c) Rigid Borescope, COM-4303 and light source, SPL-2197
   d) Rigid Borescope, COM-4304 and light source, SPL-4308
   e) alternative light source, SPL-4307
2) The monitor, MSE-64
3) The fiber borescope, COM-2196 to do the inspection of these areas:
   a) The combustion chamber
   b) The HPT nozzle guide vanes
   c) The HPT blades.
4) The borescope guide kit, SPL-2198 and the borescope guide tube, SPL-2207 to do the inspection of these areas:
   a) The HPT nozzle guide vanes
   b) The HPT blades.

BOEING PROPRIETARY - Copyright © Unpublished Work - See title page for details

DATE	TAIL NUMBER	STATION	AIRLINE CARD NO.	BOEING CARD NO.
				72-210-01-01

MECH	INSP

SUBTASK 72-00-00-210-001-F00

(6) If it is necessary to index the N2 rotor, do this task: Find the Zero Index Mark on the N2 Rotor, AMM TASK 72-00-00-980-802-F00.

NOTE: It is recommended that you stop the N2 rotor when you put each blade in position for inspection. This will permit you to do a full inspection of each blade.

SUBTASK 72-00-00-210-002-F00

(7) If it is necessary to turn or index the N1 rotor, do these steps:

(a) Put a protective mat, STD-585 in the inlet cowl.

(b) Find the number one fan blade.

NOTE: The fan blade 1 is adjacent to a machined dimple in the aft area of the rear spinner cone.

(c) Use a marker, G02481 [CP2801] to make a mark to identify the number one fan blade (AMM TASK 70-10-03-910-801-F00).

(d) Align the leading edge of the number one fan blade with the T12 temperature sensor.

NOTE: The T12 temperature sensor is approximately at the 10:30 o'clock position as you look in the inlet cowl.

SUBTASK 72-00-00-210-129-F00

(8) Do a general visual inspection of the primary plug assembly for oil puddling.

NOTE: An oil puddle in the exhaust system can occur after the engine is dry or wet motored (refer to task 71–71–00–200–801–F00).

SUBTASK 72-00-00-100-016-F00

(9) If oil puddling is found, remove the oil from the primary plug:

(a) Clean oil from the surface with a lint-free cloth, G01043. A vacuum, STD-10711 can be used to remove unwanted oil.

——— END OF TASK ———

BOEING PROPRIETARY - Copyright © Unpublished Work - See title page for details

MECH	INSP

TASK 72-00-00-200-807-F00

2. HPT Blades Borescope Inspection

(Figure 1, Figure 3, Figure 4, Figure 5, Figure 6 and Figure 7)

A. General

(1) This task provides the instructions on how to examine the HPT blades from the forward and aft sides.

(a) Do an inspection of the rotor blades from the aft side with a rigid borescope through borescope port S16 or S17.

(b) Do an inspection of the rotor blades from the forward side with a fiberscope through the main igniter plug port S10 or S11.

B. Prepare for the Inspection

SUBTASK 72-00-00-210-048-F00

(1) Do this task: Borescope Inspection Preparation, TASK 72-00-00-200-802-F00.

SUBTASK 72-00-00-010-008-F00

(2) Remove the S16 or S17 borescope plug.

SUBTASK 72-00-00-210-050-F00

(3) Remove the main igniter plugs to access the borescope inspection ports S10 and S11 (AMM TASK 74-21-02-000-801-F00).

NOTE: The 4:00 o'clock main igniter plug is referred to as the S10 borescope port. The 8:00 o'clock main igniter plug is referred to as the S11 borescope port.

SUBTASK 72-00-00-210-051-F00

(4) Prepare for the inspection of the HPT blades from the aft side as follows:

(a) If you will use the Rigid Borescope, COM-2195, connect it to light source, SPL-4305.

(b) If you will use the Rigid Borescope, COM-4302, connect it to light source, SPL-4306.

(c) If you will use the Rigid Borescope, COM-4303, connect it to light source, SPL-2197.

(d) If you will use the Rigid Borescope, COM-4304, connect it to light source, SPL-4308.

(e) Use the rigid borescope with the yellow band to get a general view.

(f) Use the rigid borescope with the green band to view the blade platform.

(g) Use the rigid borescope with the blue band to view the blade tip.

(h) Put the rigid borescope through the borescope port.

(i) Make sure the borescope is correctly adjusted.

(j) Turn the light source ON.

SUBTASK 72-00-00-210-052-F00

(5) Prepare for the inspection of the HPT blades from the forward side as follows:

(a) Put the borescope guide kit, SPL-2198 into the S10 or S11 borescope port.

BOEING PROPRIETARY - Copyright © Unpublished Work - See title page for details

(b) Connect the borescope, COM-2196 to the applicable light source.

(c) Put the fiberscope through the guide tube.

(d) Make sure the borescope is correctly adjusted.

(e) Turn the light source ON.

SUBTASK 72-00-00-820-001-F00

(6) Do this task: Turn the N2 Rotor, AMM TASK 72-00-00-980-801-F00.

C. HPT Blades Borescope Inspection

SUBTASK 72-00-00-210-053-F00

(1) Examine the trailing edge of the HPT blades as follows:

NOTE: Unless otherwise identified, all damage limits for the HPT blades are the same for the different blade configurations.

NOTE: One engine configuration has 76 HPT blades. The other engine configuration has 80 HPT blades.

(a) Cracks that connect to the trailing edge in Area A

1) One crack is permitted if the crack is not more than 0.10 inch (2.5 mm) in length.

2) For a crack that is more than 0.10 inch (2.5 mm) but less than 0.20 inch (5.1 mm) in length, do the inspection again in or less than 500 cycles.

3) The Continue-In-Service (C-I-S) limit is 10 cycles if the crack is more than 0.20 inch (5.1 mm) but less than 0.25 inch (6.4 mm) in length.

(b) Missing material, burning, or holes in the tip and Area A

1) There is no limit if the missing material is not more than 0.5 x 0.5 inch (12 x 12 mm).

2) The Continue-In-Service limit is 50 cycles if the missing material is not more than 0.5 inch axially x 0.75 inch radially (12 mm axially x 19.1 mm radially).

(c) Nicks and dents in Area A

1) There is no limit.

(d) Nicks and dents in Area B and C

1) There is no limit if the nicks and dents are not more than 0.050 inch (1.27 mm) in length.

2) Repeat the inspection after each 400 cycles if the nicks and dents are 0.050-0.120 inch (1.27-3.04 mm) in length.

3) Repeat the inspection after each 200 cycles if the nicks and dents are 0.120-0.200 inch (3.05-5.08 mm) in length.

4) The Continue-In-Service limit is 40 cycles if the nicks and dents are more than 0.200 inch (5.08 mm), but less than 0.300 inch (7.62 mm) in length.

(e) Cracks that connect to the trailing edge in Areas B, C, and root fillet

1) One crack is permitted, with these conditions:

a) Repeat the inspection after each 400 cycles, if the crack length is less than 0.120 inch (3.04 mm) in length.

BOEING PROPRIETARY - Copyright © Unpublished Work - See title page for details

b) Repeat the inspection after each 200 cycles, if the crack length is 0.120-0.200 inch (3.05-5.08 mm) in length.

2) The Continue-In-Service limit is 40 cycles if the crack is more than 0.200 inch (5.08 mm) but less than 0.300 inch (7.62 mm) in length.

(f) Missing Thermal Barrier Coating (TBC)

NOTE: Oxidation that is related to the missing TBC is permitted.

1) There is no limit to the quantity of TBC that can be missing.

(g) Plugged air slots in Area A or B

1) One plugged air passage in each blade is permitted.

2) The Continue-In-Service limit is 50 cycles if two air slots in each blade are plugged.

(h) Plugged air slots in Area C

1) Plugged air slots are not permitted.

2) The Continue-In-Service (C-I-S) limit is 50 cycles if one blade has plugged air slots in Area C.

(i) Bent material at the tip

1) There is no limit.

(j) Distortions or signs of burning or melting

1) Distortions, burning, or melting are not permitted.

2) The Continue-In-Service limit is 25 cycles if no more than 10 blades have distortions, burning, or melting.

SUBTASK 72-00-00-210-054-F00

(2) Examine the tip of the HPT blade as follows:

NOTE: Two blades approximately 90 degrees apart are notched to show the level of blade tip rub. If you cannot see the notches or if the quantity of blades with notches is different, the condition is serviceable if in limits below. The blade rub data can be used to find causes for EGT margin changes and other trends.

(a) Damage that exposes the interior cooling passages of the blade between the leading and trailing edges.

1) Exposed interior cooling passages are not permitted unless the condition is acceptable per trailing edge inspection for Missing Material or Leading Edge Inspection for Through wall hole in area A and B.

2) The Continue-In-Service (C-I-S) limit is 10 cycles if the hole is less than 0.050 inch (1.27 mm) in diameter.

(b) Radial cracks on the convex side, not closer than 0.5 inch (12 mm) to the trailing edge

1) Permitted, if the radial cracks are not more than 0.15 inch (3.8 mm) in length.

2) The Continue-In-Service (C-I-S) limit is 50 cycles if the radial cracks are not more than 0.35 inch (8.8 mm) in length.

BOEING PROPRIETARY - Copyright © Unpublished Work - See title page for details

(c) Radial cracks on the concave side, no closer than 0.5 inch (12 mm) to the trailing edge

1) Permitted, if the radial cracks are not more than 0.7 inch (17 mm) in length.

2) The Continue-In-Service (C-I-S) limit is 50 cycles if the radial cracks are not longer than 1.0 inch (25 mm).

(d) Radial cracks that are 0.5 inch (12 mm) or closer to the trailing edge

1) Permitted.

(e) Bent, curled, or missing material

1) Permitted, if all damage is above the tip shelf.

2) The Continue-In-Service (C-I-S) limit is 10 cycles if the missing material below the tip shelf is less than 0.050 inch (1.27 mm) in diameter.

(f) Distortions or signs of burning or melting

1) Distortions, burning, or melting are not permitted.

2) The Continue-In-Service limit is 25 cycles if a maximum of 10 blades have distortions, burning, or melting.

(g) Missing thermal barrier coating (TBC)

NOTE: Oxidation that is related to the missing TBC is permitted.

1) Permitted.

SUBTASK 72-00-00-210-055-F00

(3) Examine the convex and concave surfaces that are not in the leading edge, trailing edge, or tip as follow.

(a) Nicks or dents on the convex and concave surfaces in Areas A and B

1) Permitted, with these conditions:

a) In Area A, the damage is not more than 0.25 inch (6.3 mm) in length.

b) In Area B, the damage is not more than 0.10 inch (2.5 mm) in length.

2) The Continue-In-Service (C-I-S) limit is 25 cycles with this condition:

a) Cracks or missing material is not permitted.

(b) Nicks or dents on the convex and concave surfaces in Area C

1) Three nicks or dents are permitted with these conditions:

a) They are not longer than 0.05 inch (1.2 mm).

b) Dents are separated by at least 0.125 inch (3.17 mm).

2) The Continue-In-Service limit is 25 cycles with this condition:

a) Cracks or missing material is not permitted.

(c) Cracks in the concave and convex surfaces

1) Cracks are not permitted.

(d) Distortions or signs of burning or melting

1) Distortions, burning, or melting are not permitted.

2) The Continue-In-Service limit is 25 cycles, with this condition:

BOEING PROPRIETARY - Copyright © Unpublished Work - See title page for details

MECH	INSP

a) A maximum of 10 blades can have distortions, burning, or melting.

(e) Missing Thermal Barrier Coating (TBC)

1) Permitted.

SUBTASK 72-00-00-210-056-F00

(4) Examine the leading edge of the HPT rotor blades as follows:

(a) Axial and radial cracks in Area A

1) Permitted with these conditions:

a) Cracks are not more than 0.05 inch (1.2 mm) in length.

b) Cracks can not connect more than 2 holes.

2) The Continue-In-Service limit is 10 cycles, with this condition:

a) Cracks are less than 0.1 inch (2 mm) in length.

(b) Axial and radial cracks in Area B and C, that include the root fillet, and that do not intersect the nose or gill holes

1) Not permitted.

(c) Axial nose or gill hole cracks in Area B and C

1) Not permitted.

2) The Continue-In-Service limit is 10 cycles, with this condition:

a) Cracks are not more than 0.05 inch (1.2 mm) in length.

(d) Radial nose or gill hole cracks in Area B

1) One crack is permitted in Area B, with this condition:

a) The crack is not more than 0.03 inch (0.7 mm) in length.

2) The Continue-In-Service limit is 10 cycles, with this condition:

a) The crack is not more than 0.06 inch (1.5 mm) in length.

(e) Radial nose or gill hole cracks in Area C

1) Not permitted.

2) The Continue-In-Service limit is 10 cycles, with this condition:

a) Cracks are not longer than 0.03 inch (0.7 mm).

(f) Nicks and dents in Area A and B

1) Permitted.

(g) Nicks and dents in Area C, that include the root radius

1) 3 nicks or dents are permitted, with these conditions:

a) The nicks and dents are not longer than 0.05 inch (1.2 mm).

b) The nicks and dents are separated by at least 0.125 inch (3.17 mm).

(h) Dirt or environmental contamination

1) Permitted.

(i) Missing Thermal Barrier Coating (TBC)

1) Permitted.

BOEING PROPRIETARY - Copyright © Unpublished Work - See title page for details

(j) Through wall hole in Area A and B

1) Permitted with these conditions:

a) Cavity 2 is not exposed.

b) Not more than two blades have a through wall hole.

c) Do the inspection again after each 100 cycles.

<1> After a minimum of four inspections, if the size of the through wall hole has not changed, increase the inspection interval to within every 400 cycles.

<2> After a minimum of four inspections, if the size of the through wall hole has changed, maintain the inspection interval at 100 cycles.

2) The Continue-In-Service limit is 25 cycles, with this condition:

a) Cavity 2 is not exposed on all blades.

(k) Through wall hole in Area C

1) ENGINES AFFECTED BY CFM56 SERVICE BULLETINS 72-0636, 72-0886 OR 72-0918;

Permitted with these conditions:

a) The hole size is less than 0.070 inch (1.8 mm) diameter, or 0.0038 in^2 (2.45 mm^2) equivalent area.

<1> Do the inspection again after each 100 cycles.

2) The Continue-In-Service limit is 50 cycles, with this condition:

a) The hole size is less than 0.30 inch (7.6 mm) diameter, or 0.0707 in^2 (45.61 mm^2) equivalent area.

(l) Discoloration and oxidation permitted with this condition:

1) Do the inspection again after each 400 cycles.

SUBTASK 72-00-00-210-057-F00

(5) When the inspection is complete, remove the borescope equipment.

(a) Turn the light source to OFF, but keep the blower ON until the lamp and case are cool.

D. Put the Airplane Back to Its Usual Condition

SUBTASK 72-00-00-210-058-F00

(1) Do these steps to install the borescope plugs as follow:

(a) Lubricate the threads of the borescope plugs with graphite compound, D00601 [CP2101], pure nickel special compound, D50034 [CP2619] or milk of magnesia compound, D50032 [CP1064].

(b) Install the borescope plugs.

1) Tighten each borescope plug to 57-63 pound-inches (6.5-7.1 Newton-meters).

2) Install a safety wire, G02345 [CP8001] or cable, G50065 [CP8006] on each borescope plug.

BOEING PROPRIETARY - Copyright © Unpublished Work - See title page for details

DATE	TAIL NUMBER	STATION	AIRLINE CARD NO.	BOEING CARD NO.
				72-210-01-01

MECH	INSP

SUBTASK 72-00-00-410-007-F00

(2) Do this task: Main Igniter Plug Installation, AMM TASK 74-21-02-400-801-F00.

SUBTASK 72-00-00-210-059-F00

(3) Do this task: Put the Airplane Back to Its Usual Condition, TASK 72-00-00-200-814-F00.

——— END OF TASK ———

BOEING PROPRIETARY - Copyright © Unpublished Work - See title page for details

MECH	INSP

TASK 72-00-00-200-814-F00

3. Put the Airplane Back to Its Usual Condition

A. General

(1) This task provides the instructions on how to put the airplane back to its usual condition after an inspection.

B. Put the Airplane Back to Its Usual Condition

SUBTASK 72-00-00-080-009-F00

CAUTION: MAKE SURE THERE ARE NO TOOLS, PARTS, OR OTHER UNWANTED MATERIAL IN THE INLET COWL. IF YOU DO NOT OBEY THESE INSTRUCTIONS, YOU CAN CAUSE DAMAGE TO THE ENGINE.

(1) Remove the protective mat, STD-585 from the inner surface of the inlet cowl.

SUBTASK 72-00-00-210-100-F00

(2) Disassemble the borescope equipment as follows:

(a) Turn the light source to OFF.

1) Keep the blower ON until the lamp and case are cool.

(b) Make sure that the power switch is OFF.

(c) Make sure that the light intensity control is set to minimum.

(d) Disconnect the power supply and the ground.

(e) Disconnect the extension and the viewer from the borescope.

(f) Disconnect the borescope from the fiber light cable.

(g) Disconnect the fiber light cable from the light source.

SUBTASK 72-00-00-210-101-F00

CAUTION: MAKE SURE THAT YOU INSTALL THE COVER ON THE GEARBOX. IF YOU DO NOT INSTALL THE COVER, ENGINE OIL LEAKS CAN OCCUR DURING OPERATION AND ENGINE DAMAGE CAN OCCUR.

(3) If not already done, do this task: Handcranking Drive Cover Installation, AMM TASK 72-63-01-400-801-F00.

SUBTASK 72-00-00-410-045-F00

WARNING: OBEY THE INSTRUCTIONS IN THE PROCEDURE TO CLOSE THE THRUST REVERSERS. IF YOU DO NOT OBEY THE INSTRUCTIONS, INJURIES TO PERSONS AND DAMAGE TO EQUIPMENT CAN OCCUR.

(4) Do these tasks in sequence to safely close the left and right thrust reversers:

(a) Do this task: Close the Thrust Reverser (Selection), AMM TASK 78-31-00-010-804-F00.

(b) Do this task: Close the Fan Cowl Panels, AMM TASK 71-11-02-410-801-F00.

(c) Do this task: Thrust Reverser Activation after Ground Maintenance, AMM TASK 78-31-00-440-803-F00.

BOEING PROPRIETARY - Copyright © Unpublished Work - See title page for details

DATE	TAIL NUMBER	STATION	AIRLINE CARD NO.	BOEING CARD NO.
				72-210-01-01

MECH	INSP

SUBTASK 72-00-00-860-078-F00

(5) For Engine 1, remove the safety tag and close this circuit breaker:

CAPT Electrical System Panel, P18-2

Row	Col	Number	Name
B	8	C01103	ENGINE 1 START VALVE

SUBTASK 72-00-00-860-079-F00

(6) For Engine 2, remove the safety tag and close this circuit breaker:

F/O Electrical System Panel, P6-2

Row	Col	Number	Name
C	4	C00154	ENGINE 2 START VALVE

SUBTASK 72-00-00-860-006-F00

(7) On the applicable engine, remove the DO-NOT-OPERATE tag from the start lever.

——— END OF TASK ———

BOEING PROPRIETARY - Copyright © Unpublished Work - See title page for details

DATE	TAIL NUMBER	STATION	AIRLINE CARD NO.	BOEING CARD NO.
				72-210-01-01

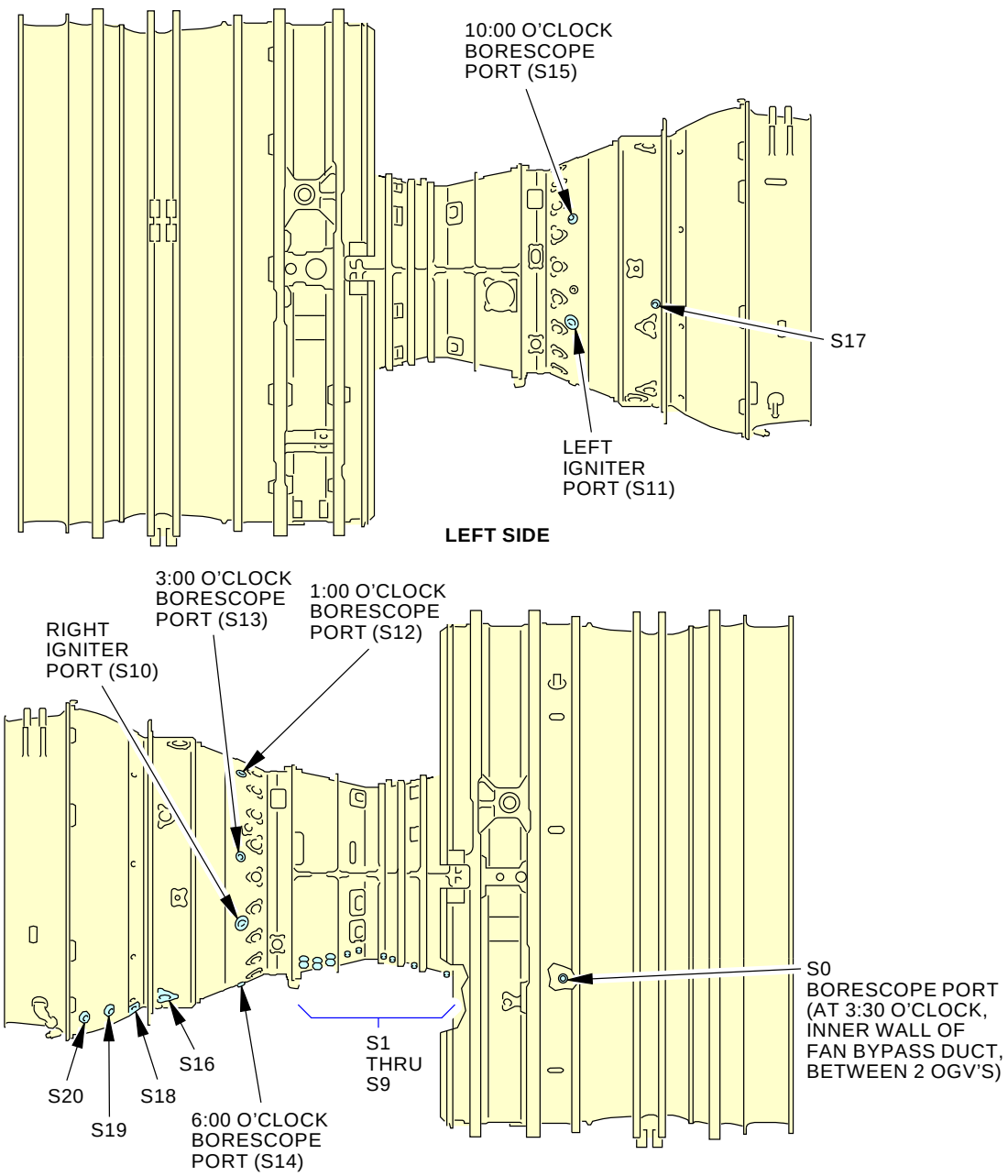

NOTE:

SOME ENGINE COMPONENTS
REMOVED FOR CLARITY.

S-M56-MM-03504-00-B
H50646 S0006582226_V2

Borescope Port Locations
Figure 1

BOEING PROPRIETARY - Copyright © Unpublished Work - See title page for details

DATE	TAIL NUMBER	STATION	AIRLINE CARD NO.	BOEING CARD NO.
				72-210-01-01

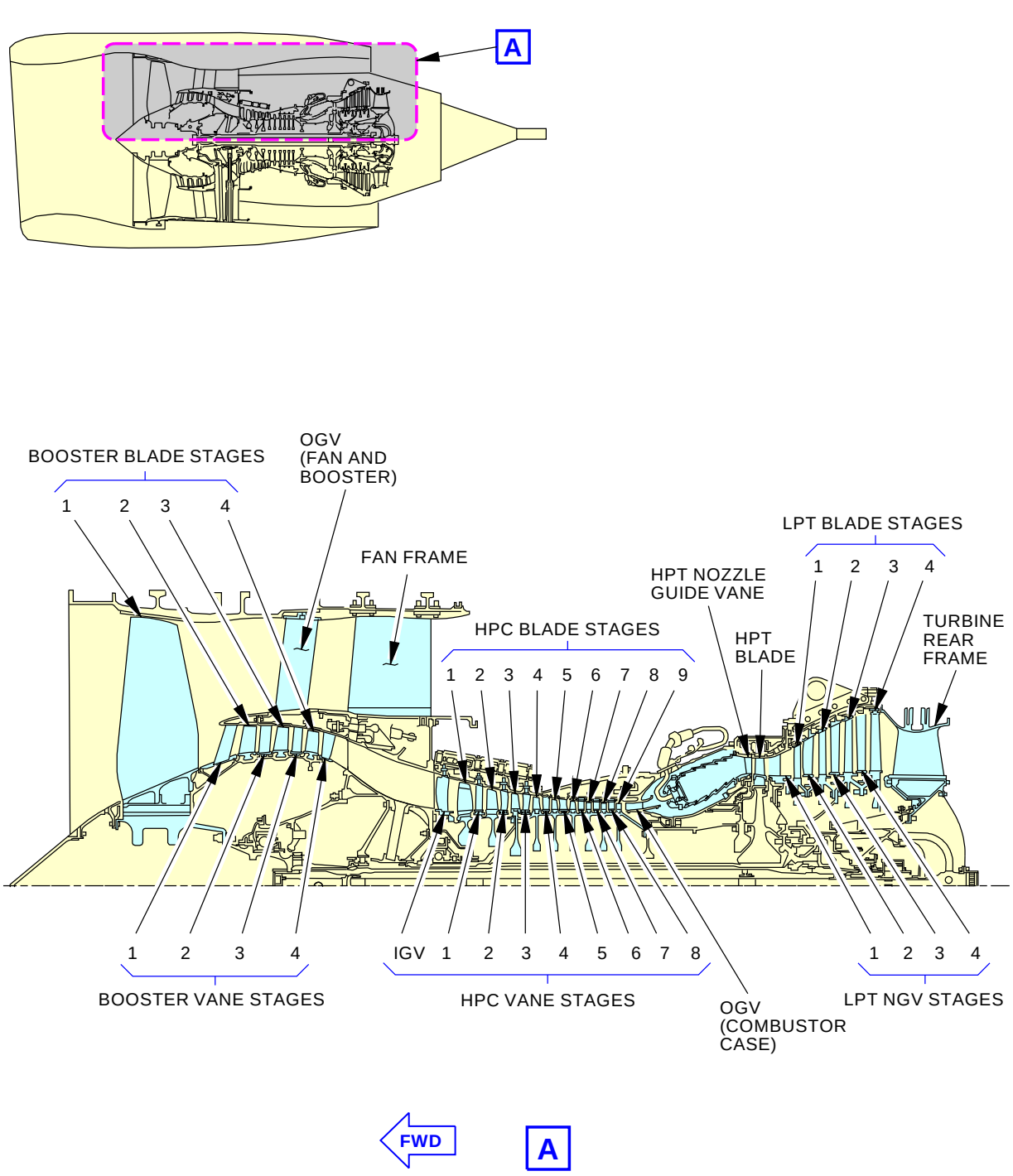

G47263 S0006582229_V3

Engine Airfoil Count
Figure 2 (Sheet 1 of 2)

BOEING PROPRIETARY - Copyright © Unpublished Work - See title page for details

NOMENCLATURE	STAGE	NUMBER OF BLADES
FAN AND BOOSTER	1	24
	2	74
	3	78
	4	74
HIGH PRESSURE COMPRESSOR (HPC)	1	38
	2	53
	3	60
	4	68
	5	75
	6	82
	7	82
	8	80
	9	76
HIGH PRESSURE TURBINE (HPT) NON-7BE ENGINE		80
HIGH PRESSURE TURBINE HPT 7BE ENGINE		76
LOW PRESSURE TURBINE (LPT) NON-7BE ENGINE	1	162
	2	150
	3	150
	4	134
LOW PRESSURE TURBINE LPT 7BE ENGINE	1	154
	2	134
	3	136
	4	138

G48151 S0006582230_V4

Engine Airfoil Count
Figure 2 (Sheet 2 of 2)

BOEING PROPRIETARY - Copyright © Unpublished Work - See title page for details

DATE	TAIL NUMBER	STATION	AIRLINE CARD NO.	BOEING CARD NO.
				72-210-01-01

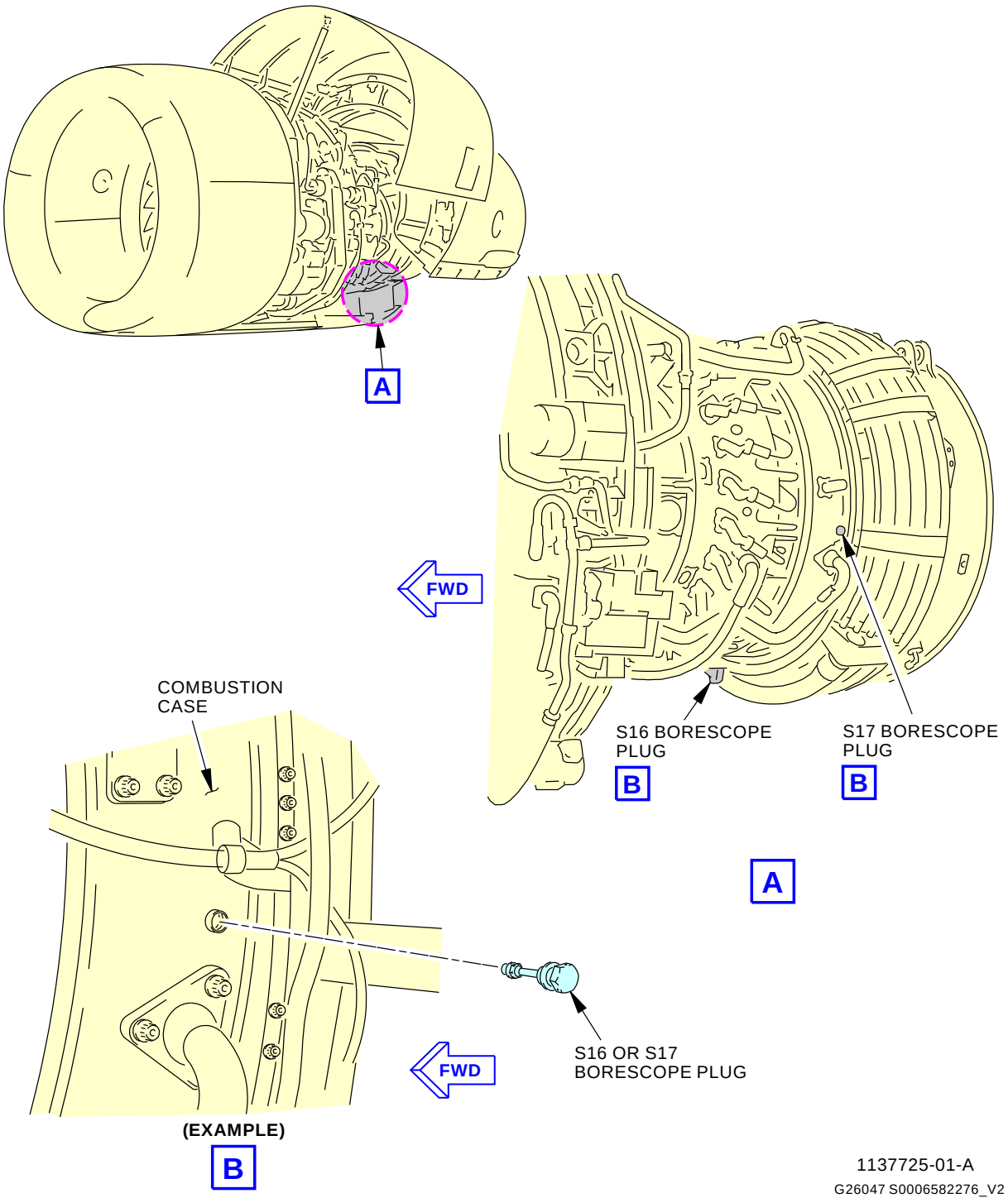

HPT Blades Borescope Plug Installation
Figure 3

BOEING PROPRIETARY - Copyright © Unpublished Work - See title page for details

DATE	TAIL NUMBER	STATION	AIRLINE CARD NO.	BOEING CARD NO.
				72-210-01-01

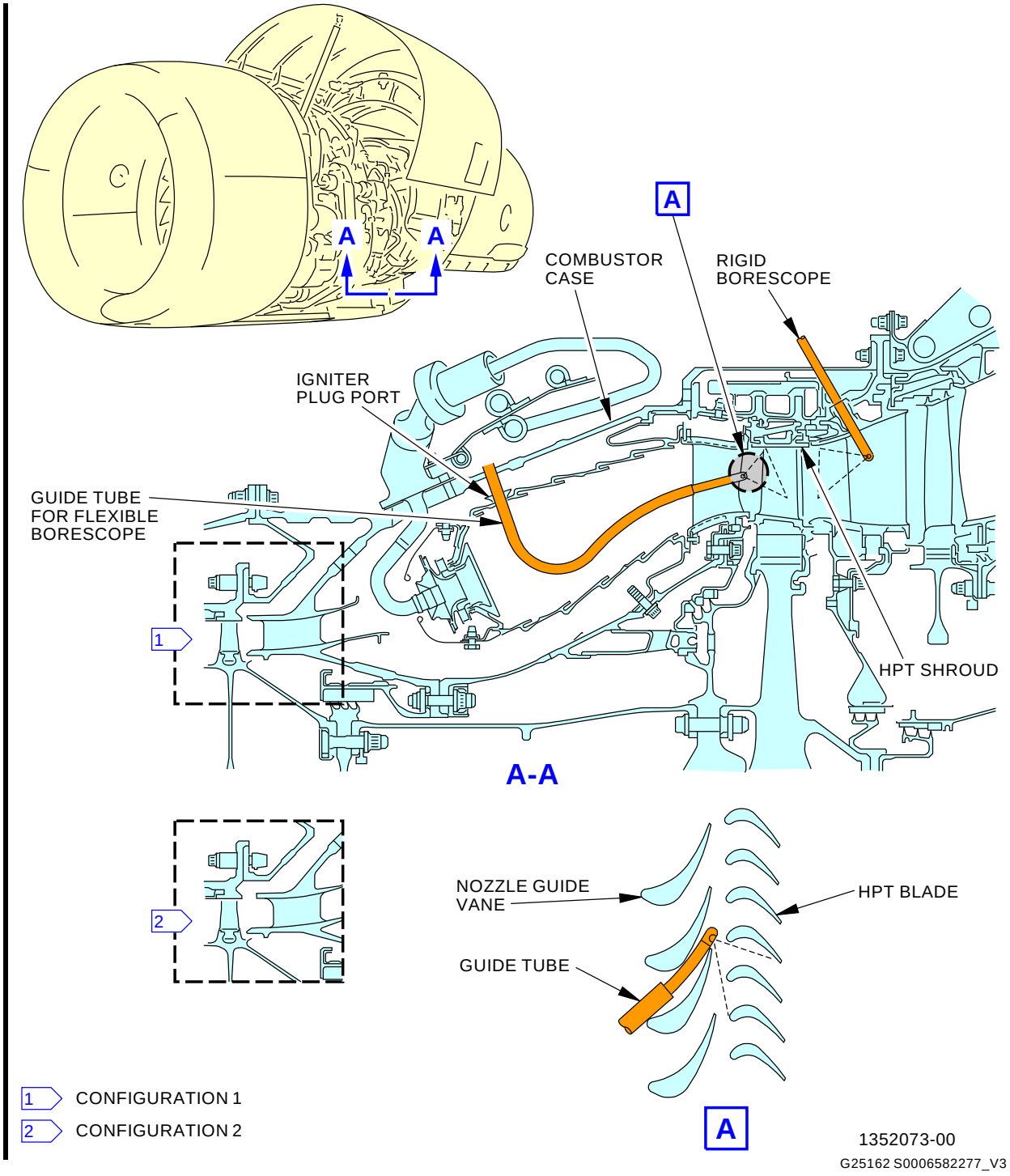

HPT Blade Borescope Inspection Locations
Figure 4

BOEING PROPRIETARY - Copyright © Unpublished Work - See title page for details

DATE	TAIL NUMBER	STATION	AIRLINE CARD NO.	BOEING CARD NO.
				72-210-01-01

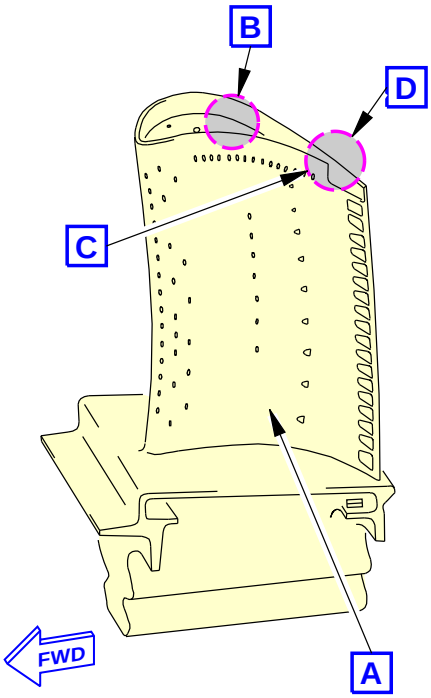

HPT BLADE
(EXAMPLE)

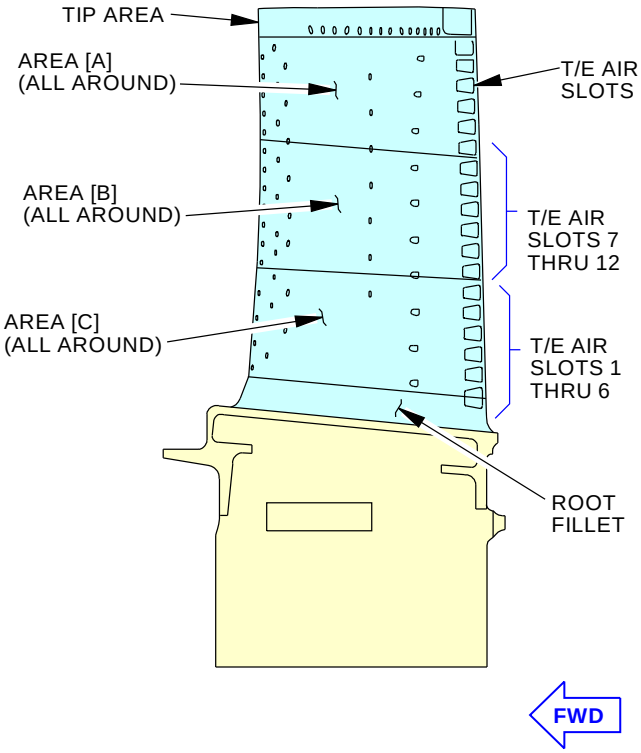

(SIDE VIEW)

A

NOTE:

80 BLADE HPT ROTOR CONFIGURATION

1352453-00

G24473 S0006582279_V3

HPT Blade Inspection Borescope Common Limits
Figure 5 (Sheet 1 of 2)

BOEING PROPRIETARY - Copyright © Unpublished Work - See title page for details

DATE	TAIL NUMBER	STATION	AIRLINE CARD NO.	BOEING CARD NO.
				72-210-01-01

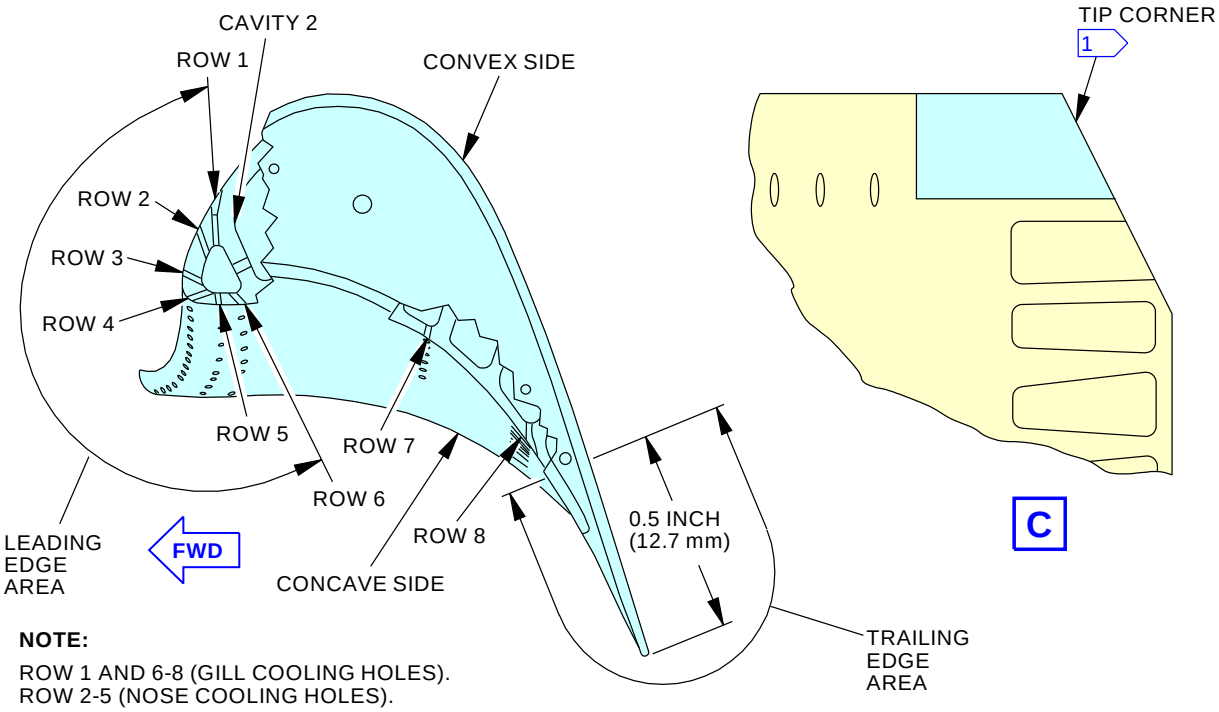

NOTE:

ROW 1 AND 6-8 (GILL COOLING HOLES).
ROW 2-5 (NOSE COOLING HOLES).

GMM-1163838-00-A
GMM-1137423-02-A

(TOP VIEW)

B

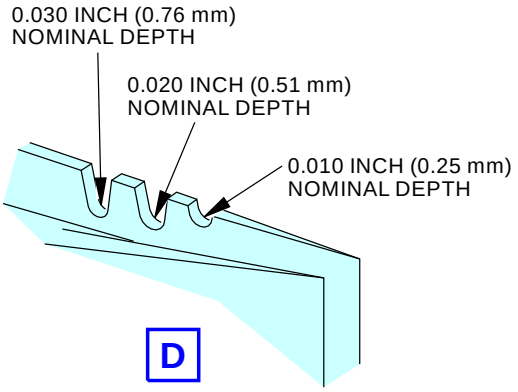

NOTE:

80 BLADE HPT ROTOR CONFIGURATION

1 SOME HPT BLADES HAVE THE TRAILING EDGE TIP CORNER "CROPPED" DURING MANUFACTURE. THIS IS ACCEPTABLE. DO NOT CONFUSE WITH SHROUD DROP RUBBING OF THE BLADE TIP. SHROUD DROP RUBBING RESULTS IN A SHALLOWER ANGLE.

1352454-00

H87161 S0006582280_V3

HPT Blade Inspection Borescope Common Limits
Figure 5 (Sheet 2 of 2)

BOEING PROPRIETARY - Copyright © Unpublished Work - See title page for details

DATE	TAIL NUMBER	STATION	AIRLINE CARD NO.	BOEING CARD NO.
				72-210-01-01

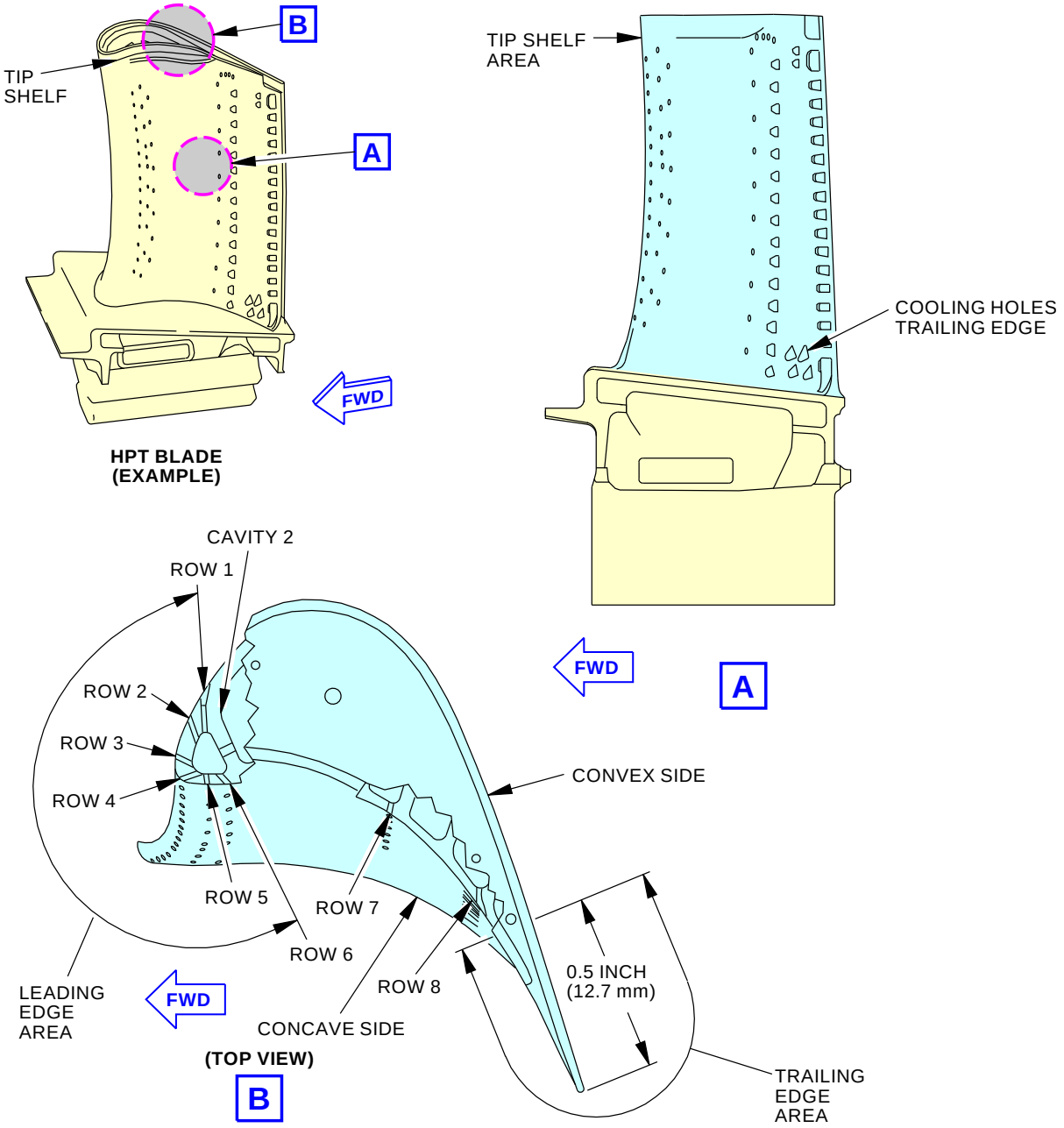

NOTE:

80 BLADE HPT ROTOR CONFIGURATION WITH ADDED TRAILING EDGE COOLING HOLES AND TIP SHELF AREA.

1352455-00
2090811 S0000441462_V2

HPT Blade With Tip Shelf Inspection
Figure 6

BOEING PROPRIETARY - Copyright © Unpublished Work - See title page for details

DATE	TAIL NUMBER	STATION	AIRLINE CARD NO.	BOEING CARD NO.
				72-210-01-01

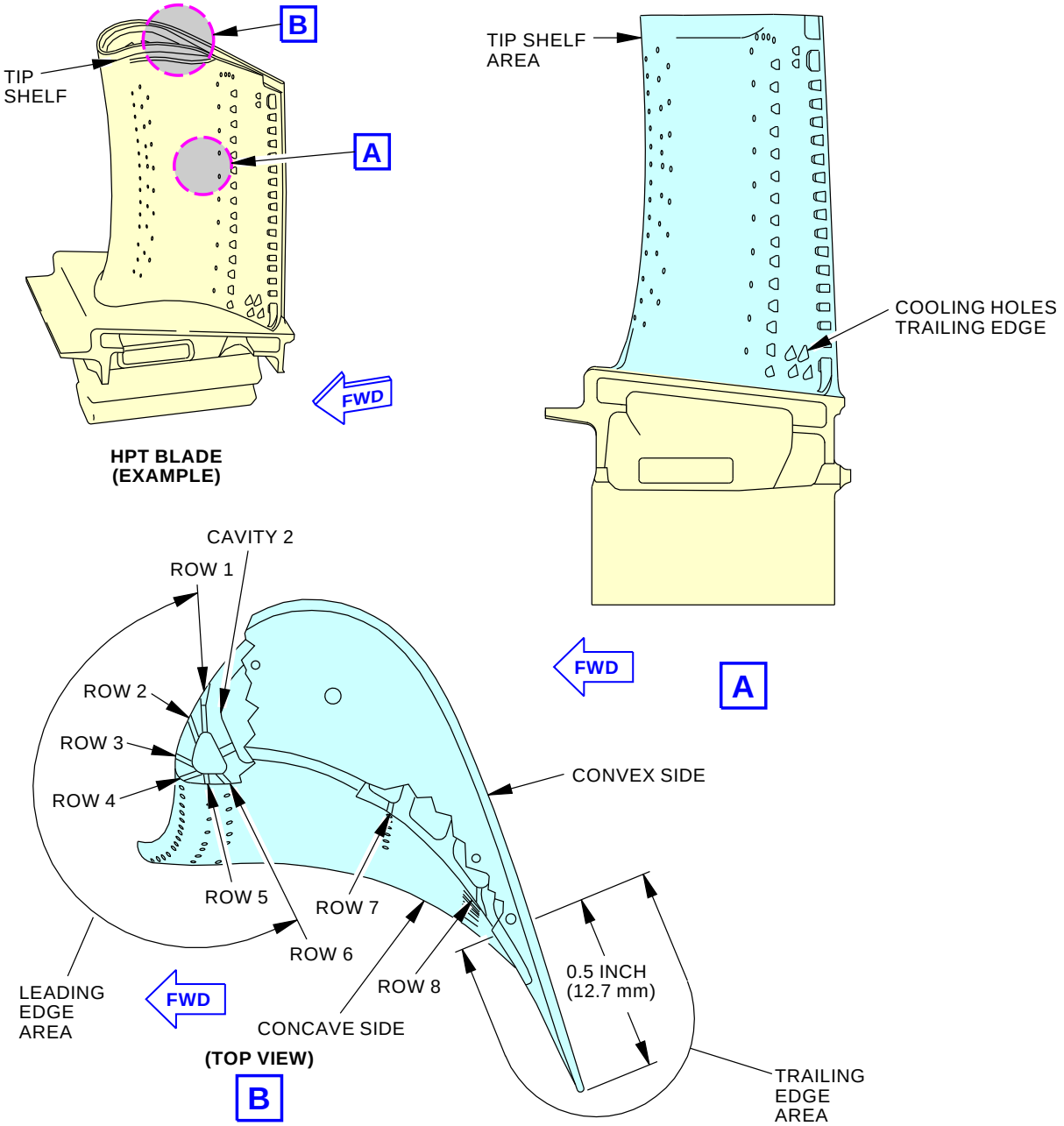

NOTE:

80 BLADE HPT ROTOR CONFIGURATION WITH ADDED TRAILING EDGE COOLING HOLES AND TIP SHELF AREA.

1352455-00
2090818 S0000441466_V4

HPT Blade With Contoured Platform and Tip Cap Baffle Inspection
Figure 7

BOEING PROPRIETARY - Copyright © Unpublished Work - See title page for details

AIRLINE CARD NO		TITLE			BOEING CARD NO.
		RIGHT ENGINE HPT BLADES			72-210-02-01
DATE	TASK				RELATED CARD
	INSPECTION - DETAILED				
TAIL NUMBER	WORK AREA	VERSION	THRESHOLD	REPEAT	APPLICABILITY
	RIGHT ENGINE	1.1 1.2	6600 FC 15000 FH	1600 FC 4000 FH	AIRPLANE: ALL ENGINE: ALL
STATION	SKILL				
	ENGIN				
		ACCESS			ZONE
		425 426			421

Borescope inspection of the right engine HPT blades.

A. References

Reference	Title
AMM 70-10-03-910-801-F00	Temporary Marking Procedures (P/B 201)
AMM 71-11-02-010-801-F00	Open the Fan Cowl Panels (P/B 201)
AMM 71-11-02-410-801-F00	Close the Fan Cowl Panels (P/B 201)
AMM 72-00-00-980-801-F00	Turn the N2 Rotor (P/B 201)
AMM 72-00-00-980-802-F00	Find the Zero Index Mark on the N2 Rotor (P/B 201)
AMM 72-63-01-400-801-F00	Handcranking Drive Cover Installation (P/B 201)
AMM 74-21-02-000-801-F00	Main Igniter Plug Removal (P/B 401)
AMM 74-21-02-400-801-F00	Main Igniter Plug Installation (P/B 401)
AMM 78-31-00-010-801-F00	Open the Thrust Reverser (Selection) (P/B 201)
AMM 78-31-00-010-804-F00	Close the Thrust Reverser (Selection) (P/B 201)
AMM 78-31-00-040-802-F00	Thrust Reverser Deactivation For Ground Maintenance (P/B 201)
AMM 78-31-00-440-803-F00	Thrust Reverser Activation After Ground Maintenance (P/B 201)

B. Consumable Materials

Reference	Description	Specification
D00601 [CP2101]	High-temperature graphite compound	SAE AMS 2518
D50032 [CP1064]	Compound - Antiseize - Milk of Magnesia	
D50034 [CP2619]	Compound - Antiseize - Pure Nickel Special, Never - Seez	CFM CP2619
G01043	Cloth - Lint-free	
G02345 [CP8001]	Wire - Safety, 0.032 Inch (0.8 mm) Diameter	CFM CP8001, AMS 5687
G02481 [CP2801]	Marker - Temporary	
G50065 [CP8006]	Cable, Safety, Stainless Steel, 0.032 inch (0.813 mm) Diameter	M50 TF 9 CL-A

BOEING PROPRIETARY - Copyright © Unpublished Work - See title page for details

C. Tools/Equipment

NOTE: When more than one tool part number is listed under the same "Reference" number, the tools shown are alternates to each other within the same airplane series. Tool part numbers that are replaced or non-procurable are preceded by "Opt:", which stands for Optional.

Reference	Description
COM-2195	Set - Borescope Rigid, Olympus Part #: 856A1320P04 Supplier: 58828
COM-2196	Set - Borescope Fiber, 6 mm diameter Part #: 856A1321P05 Supplier: 58828 Part #: 856A1321P06 Supplier: 58828 Opt Part #: 856A1321P03 Supplier: 58828
COM-4302	Set - Borescope Rigid, Wolf Part #: 856A1320P05 Supplier: 58828
COM-4303	Set - Borescope Rigid, Lenox Part #: 856A1320P06 Supplier: 58828
COM-4304	Set - Borescope Rigid, ITI USA Part #: 856A1320P07 Supplier: 58828
SPL-2197	Light Source - Borescope, Lenox (150W) Part #: 856A1322P02 Supplier: 58828
SPL-2198	Kit - Borescope Guide, HP Turbine, CFM56 Engines Part #: 856A1310G01 Supplier: 58828
SPL-2207	Guide Tube - Borescope, HPT Shroud, CFM56 Engines Part #: 856A1351P01 Supplier: 58828
SPL-4305	Light Source - Borescope, Olympus (150W) Part #: 856A1322P03 Supplier: 58828
SPL-4306	Light Source - Borescope, Wolf (300W) Part #: 856A1322P04 Supplier: 58828
SPL-4307	Light Source - Borescope, Machida Part #: 856A1322P07 Supplier: 58828
SPL-4308	Light Source - Borescope, ITI USA (150W) Part #: 856A1322P08 Supplier: 58828
STD-10711	Shop Vacuum (400Hz if using aircraft power)
STD-585	Mat - Protective, 3/8 Inch (9.5 mm) Minimum Thickness, Minimum 42x60 Inches (1x1.5 meters) with Warning Streamers

BOEING PROPRIETARY - Copyright © Unpublished Work - See title page for details

TASK 72-00-00-200-802-F00

1. Borescope Inspection Preparation

(Figure 1 and Figure 2)

A. General

(1) This task provides the instructions on how to prepare for the borescope inspection.

B. Borescope Inspection Preparation

SUBTASK 72-00-00-860-001-F00

(1) For the applicable engine, install a DO-NOT-OPERATE tag on the start lever.

SUBTASK 72-00-00-860-080-F00

(2) For Engine 1, open this circuit breaker and install a safety tag:

CAPT Electrical System Panel, P18-2

Row	Col	Number	Name
B	8	C01103	ENGINE 1 START VALVE

SUBTASK 72-00-00-860-081-F00

(3) For Engine 2, open this circuit breaker and install a safety tag:

F/O Electrical System Panel, P6-2

Row	Col	Number	Name
C	4	C00154	ENGINE 2 START VALVE

SUBTASK 72-00-00-860-082-F00

(4) Do these tasks in sequence to safely open the left and right thrust reversers on the applicable engine:

WARNING: DO THE DEACTIVATION PROCEDURE FOR THE THRUST REVERSER TO PREVENT THE OPERATION OF THE THRUST REVERSER. ACCIDENTAL OPERATION OF THE THRUST REVERSER CAN CAUSE INJURIES TO PERSONS OR DAMAGE TO EQUIPMENT.

(a) Do this task: Thrust Reverser Deactivation for Ground Maintenance, AMM TASK 78-31-00-040-802-F00.

(b) Open the left and right fan cowl panels (AMM TASK 71-11-02-010-801-F00).

WARNING: OBEY THE INSTRUCTIONS IN THE PROCEDURE TO OPEN THE THRUST REVERSERS. IF YOU DO NOT OBEY THE INSTRUCTIONS, INJURIES TO PERSONS AND DAMAGE TO EQUIPMENT CAN OCCUR.

(c) Open the left and right thrust reversers (AMM TASK 78-31-00-010-801-F00).

BOEING PROPRIETARY - Copyright © Unpublished Work - See title page for details

MECH	INSP

SUBTASK 72-00-00-480-001-F00

(5) Refer to the applicable steps and borescope equipment to prepare for the inspection:

NOTE: For this procedure, borescope equipment is used for all inspections but not for the axial preload check of the Stage 4 LPT blades.

NOTE: Refer to the CFM Illustrated Tool and Equipment manual for the current part number for all the borescope equipment.

NOTE: Alternative borescope equipment that is as good or better than the CFM Borescope Specification is permitted for use. Refer to the CFM Non-Destructive Test Manual (CFM-TP-NT.11), Borescope Inspection, Part 7, for requirements.

CAUTION: MAKE SURE THAT THE POWER SWITCH IS IN THE OFF POSITION AND THE LIGHT INTENSITY CONTROL IS SET AT MINIMUM BEFORE YOU CONNECT THE LIGHT SOURCE TO THE POWER SUPPLY. MAKE SURE THE LIGHT SOURCE AND THE POWER SUPPLY ARE CORRECTLY ATTACHED TO A GROUND. DAMAGE TO THE EQUIPMENT CAN OCCUR.

(a) Connect the applicable light source to a power source that is grounded.

(b) You will use these borescope tools to do a complete borescope inspection of the engine:

NOTE: For more data on the use of this borescope equipment, refer to CFM NDTM 72-00-00, Part 7.

It is not recommended to do a borescope inspection at temperatures more than 150 degrees F (65.6 degrees C). You can do a dry motor to increase the engine cool down rate.

1) The applicable borescope and light source
   a) Rigid Borescope, COM-2195 and light source, SPL-4305
   b) Rigid Borescope, COM-4302 and light source, SPL-4306
   c) Rigid Borescope, COM-4303 and light source, SPL-2197
   d) Rigid Borescope, COM-4304 and light source, SPL-4308
   e) alternative light source, SPL-4307
2) The monitor, MSE-64
3) The fiber borescope, COM-2196 to do the inspection of these areas:
   a) The combustion chamber
   b) The HPT nozzle guide vanes
   c) The HPT blades.
4) The borescope guide kit, SPL-2198 and the borescope guide tube, SPL-2207 to do the inspection of these areas:
   a) The HPT nozzle guide vanes
   b) The HPT blades.

BOEING PROPRIETARY - Copyright © Unpublished Work - See title page for details

DATE	TAIL NUMBER	STATION	AIRLINE CARD NO.	BOEING CARD NO.
				72-210-02-01

MECH	INSP

SUBTASK 72-00-00-210-001-F00

(6) If it is necessary to index the N2 rotor, do this task: Find the Zero Index Mark on the N2 Rotor, AMM TASK 72-00-00-980-802-F00.

NOTE: It is recommended that you stop the N2 rotor when you put each blade in position for inspection. This will permit you to do a full inspection of each blade.

SUBTASK 72-00-00-210-002-F00

(7) If it is necessary to turn or index the N1 rotor, do these steps:

(a) Put a protective mat, STD-585 in the inlet cowl.

(b) Find the number one fan blade.

NOTE: The fan blade 1 is adjacent to a machined dimple in the aft area of the rear spinner cone.

(c) Use a marker, G02481 [CP2801] to make a mark to identify the number one fan blade (AMM TASK 70-10-03-910-801-F00).

(d) Align the leading edge of the number one fan blade with the T12 temperature sensor.

NOTE: The T12 temperature sensor is approximately at the 10:30 o'clock position as you look in the inlet cowl.

SUBTASK 72-00-00-210-129-F00

(8) Do a general visual inspection of the primary plug assembly for oil puddling.

NOTE: An oil puddle in the exhaust system can occur after the engine is dry or wet motored (refer to task 71–71–00–200–801–F00).

SUBTASK 72-00-00-100-016-F00

(9) If oil puddling is found, remove the oil from the primary plug:

(a) Clean oil from the surface with a lint-free cloth, G01043. A vacuum, STD-10711 can be used to remove unwanted oil.

——— END OF TASK ———

BOEING PROPRIETARY - Copyright © Unpublished Work - See title page for details

DATE	TAIL NUMBER	STATION	AIRLINE CARD NO.	BOEING CARD NO.
				72-210-02-01

MECH	INSP

TASK 72-00-00-200-807-F00

2. HPT Blades Borescope Inspection

(Figure 1, Figure 3, Figure 4, Figure 5, Figure 6 and Figure 7)

A. General

(1) This task provides the instructions on how to examine the HPT blades from the forward and aft sides.

(a) Do an inspection of the rotor blades from the aft side with a rigid borescope through borescope port S16 or S17.

(b) Do an inspection of the rotor blades from the forward side with a fiberscope through the main igniter plug port S10 or S11.

B. Prepare for the Inspection

SUBTASK 72-00-00-210-048-F00

(1) Do this task: Borescope Inspection Preparation, TASK 72-00-00-200-802-F00.

SUBTASK 72-00-00-010-008-F00

(2) Remove the S16 or S17 borescope plug.

SUBTASK 72-00-00-210-050-F00

(3) Remove the main igniter plugs to access the borescope inspection ports S10 and S11 (AMM TASK 74-21-02-000-801-F00).

NOTE: The 4:00 o'clock main igniter plug is referred to as the S10 borescope port. The 8:00 o'clock main igniter plug is referred to as the S11 borescope port.

SUBTASK 72-00-00-210-051-F00

(4) Prepare for the inspection of the HPT blades from the aft side as follows:

(a) If you will use the Rigid Borescope, COM-2195, connect it to light source, SPL-4305.

(b) If you will use the Rigid Borescope, COM-4302, connect it to light source, SPL-4306.

(c) If you will use the Rigid Borescope, COM-4303, connect it to light source, SPL-2197.

(d) If you will use the Rigid Borescope, COM-4304, connect it to light source, SPL-4308.

(e) Use the rigid borescope with the yellow band to get a general view.

(f) Use the rigid borescope with the green band to view the blade platform.

(g) Use the rigid borescope with the blue band to view the blade tip.

(h) Put the rigid borescope through the borescope port.

(i) Make sure the borescope is correctly adjusted.

(j) Turn the light source ON.

SUBTASK 72-00-00-210-052-F00

(5) Prepare for the inspection of the HPT blades from the forward side as follows:

(a) Put the borescope guide kit, SPL-2198 into the S10 or S11 borescope port.

BOEING PROPRIETARY - Copyright © Unpublished Work - See title page for details

MECH	INSP

(b) Connect the borescope, COM-2196 to the applicable light source.

(c) Put the fiberscope through the guide tube.

(d) Make sure the borescope is correctly adjusted.

(e) Turn the light source ON.

SUBTASK 72-00-00-820-001-F00

(6) Do this task: Turn the N2 Rotor, AMM TASK 72-00-00-980-801-F00.

C. HPT Blades Borescope Inspection

SUBTASK 72-00-00-210-053-F00

(1) Examine the trailing edge of the HPT blades as follows:

NOTE: Unless otherwise identified, all damage limits for the HPT blades are the same for the different blade configurations.

NOTE: One engine configuration has 76 HPT blades. The other engine configuration has 80 HPT blades.

(a) Cracks that connect to the trailing edge in Area A

1) One crack is permitted if the crack is not more than 0.10 inch (2.5 mm) in length.

2) For a crack that is more than 0.10 inch (2.5 mm) but less than 0.20 inch (5.1 mm) in length, do the inspection again in or less than 500 cycles.

3) The Continue-In-Service (C-I-S) limit is 10 cycles if the crack is more than 0.20 inch (5.1 mm) but less than 0.25 inch (6.4 mm) in length.

(b) Missing material, burning, or holes in the tip and Area A

1) There is no limit if the missing material is not more than 0.5 x 0.5 inch (12 x 12 mm).

2) The Continue-In-Service limit is 50 cycles if the missing material is not more than 0.5 inch axially x 0.75 inch radially (12 mm axially x 19.1 mm radially).

(c) Nicks and dents in Area A

1) There is no limit.

(d) Nicks and dents in Area B and C

1) There is no limit if the nicks and dents are not more than 0.050 inch (1.27 mm) in length.

2) Repeat the inspection after each 400 cycles if the nicks and dents are 0.050-0.120 inch (1.27-3.04 mm) in length.

3) Repeat the inspection after each 200 cycles if the nicks and dents are 0.120-0.200 inch (3.05-5.08 mm) in length.

4) The Continue-In-Service limit is 40 cycles if the nicks and dents are more than 0.200 inch (5.08 mm), but less than 0.300 inch (7.62 mm) in length.

(e) Cracks that connect to the trailing edge in Areas B, C, and root fillet

1) One crack is permitted, with these conditions:

a) Repeat the inspection after each 400 cycles, if the crack length is less than 0.120 inch (3.04 mm) in length.

BOEING PROPRIETARY - Copyright © Unpublished Work - See title page for details

b) Repeat the inspection after each 200 cycles, if the crack length is 0.120-0.200 inch (3.05-5.08 mm) in length.

2) The Continue-In-Service limit is 40 cycles if the crack is more than 0.200 inch (5.08 mm) but less than 0.300 inch (7.62 mm) in length.

(f) Missing Thermal Barrier Coating (TBC)

NOTE: Oxidation that is related to the missing TBC is permitted.

1) There is no limit to the quantity of TBC that can be missing.

(g) Plugged air slots in Area A or B

1) One plugged air passage in each blade is permitted.

2) The Continue-In-Service limit is 50 cycles if two air slots in each blade are plugged.

(h) Plugged air slots in Area C

1) Plugged air slots are not permitted.

2) The Continue-In-Service (C-I-S) limit is 50 cycles if one blade has plugged air slots in Area C.

(i) Bent material at the tip

1) There is no limit.

(j) Distortions or signs of burning or melting

1) Distortions, burning, or melting are not permitted.

2) The Continue-In-Service limit is 25 cycles if no more than 10 blades have distortions, burning, or melting.

SUBTASK 72-00-00-210-054-F00

(2) Examine the tip of the HPT blade as follows:

NOTE: Two blades approximately 90 degrees apart are notched to show the level of blade tip rub. If you cannot see the notches or if the quantity of blades with notches is different, the condition is serviceable if in limits below. The blade rub data can be used to find causes for EGT margin changes and other trends.

(a) Damage that exposes the interior cooling passages of the blade between the leading and trailing edges.

1) Exposed interior cooling passages are not permitted unless the condition is acceptable per trailing edge inspection for Missing Material or Leading Edge Inspection for Through wall hole in area A and B.

2) The Continue-In-Service (C-I-S) limit is 10 cycles if the hole is less than 0.050 inch (1.27 mm) in diameter.

(b) Radial cracks on the convex side, not closer than 0.5 inch (12 mm) to the trailing edge

1) Permitted, if the radial cracks are not more than 0.15 inch (3.8 mm) in length.

2) The Continue-In-Service (C-I-S) limit is 50 cycles if the radial cracks are not more than 0.35 inch (8.8 mm) in length.

BOEING PROPRIETARY - Copyright © Unpublished Work - See title page for details

(c) Radial cracks on the concave side, no closer than 0.5 inch (12 mm) to the trailing edge

1) Permitted, if the radial cracks are not more than 0.7 inch (17 mm) in length.

2) The Continue-In-Service (C-I-S) limit is 50 cycles if the radial cracks are not longer than 1.0 inch (25 mm).

(d) Radial cracks that are 0.5 inch (12 mm) or closer to the trailing edge

1) Permitted.

(e) Bent, curled, or missing material

1) Permitted, if all damage is above the tip shelf.

2) The Continue-In-Service (C-I-S) limit is 10 cycles if the missing material below the tip shelf is less than 0.050 inch (1.27 mm) in diameter.

(f) Distortions or signs of burning or melting

1) Distortions, burning, or melting are not permitted.

2) The Continue-In-Service limit is 25 cycles if a maximum of 10 blades have distortions, burning, or melting.

(g) Missing thermal barrier coating (TBC)

NOTE: Oxidation that is related to the missing TBC is permitted.

1) Permitted.

SUBTASK 72-00-00-210-055-F00

(3) Examine the convex and concave surfaces that are not in the leading edge, trailing edge, or tip as follow.

(a) Nicks or dents on the convex and concave surfaces in Areas A and B

1) Permitted, with these conditions:

a) In Area A, the damage is not more than 0.25 inch (6.3 mm) in length.

b) In Area B, the damage is not more than 0.10 inch (2.5 mm) in length.

2) The Continue-In-Service (C-I-S) limit is 25 cycles with this condition:

a) Cracks or missing material is not permitted.

(b) Nicks or dents on the convex and concave surfaces in Area C

1) Three nicks or dents are permitted with these conditions:

a) They are not longer than 0.05 inch (1.2 mm).

b) Dents are separated by at least 0.125 inch (3.17 mm).

2) The Continue-In-Service limit is 25 cycles with this condition:

a) Cracks or missing material is not permitted.

(c) Cracks in the concave and convex surfaces

1) Cracks are not permitted.

(d) Distortions or signs of burning or melting

1) Distortions, burning, or melting are not permitted.

2) The Continue-In-Service limit is 25 cycles, with this condition:

BOEING PROPRIETARY - Copyright © Unpublished Work - See title page for details

MECH	INSP

a) A maximum of 10 blades can have distortions, burning, or melting.

(e) Missing Thermal Barrier Coating (TBC)

1) Permitted.

SUBTASK 72-00-00-210-056-F00

(4) Examine the leading edge of the HPT rotor blades as follows:

(a) Axial and radial cracks in Area A

1) Permitted with these conditions:

a) Cracks are not more than 0.05 inch (1.2 mm) in length.

b) Cracks can not connect more than 2 holes.

2) The Continue-In-Service limit is 10 cycles, with this condition:

a) Cracks are less than 0.1 inch (2 mm) in length.

(b) Axial and radial cracks in Area B and C, that include the root fillet, and that do not intersect the nose or gill holes

1) Not permitted.

(c) Axial nose or gill hole cracks in Area B and C

1) Not permitted.

2) The Continue-In-Service limit is 10 cycles, with this condition:

a) Cracks are not more than 0.05 inch (1.2 mm) in length.

(d) Radial nose or gill hole cracks in Area B

1) One crack is permitted in Area B, with this condition:

a) The crack is not more than 0.03 inch (0.7 mm) in length.

2) The Continue-In-Service limit is 10 cycles, with this condition:

a) The crack is not more than 0.06 inch (1.5 mm) in length.

(e) Radial nose or gill hole cracks in Area C

1) Not permitted.

2) The Continue-In-Service limit is 10 cycles, with this condition:

a) Cracks are not longer than 0.03 inch (0.7 mm).

(f) Nicks and dents in Area A and B

1) Permitted.

(g) Nicks and dents in Area C, that include the root radius

1) 3 nicks or dents are permitted, with these conditions:

a) The nicks and dents are not longer than 0.05 inch (1.2 mm).

b) The nicks and dents are separated by at least 0.125 inch (3.17 mm).

(h) Dirt or environmental contamination

1) Permitted.

(i) Missing Thermal Barrier Coating (TBC)

1) Permitted.

BOEING PROPRIETARY - Copyright © Unpublished Work - See title page for details

(j) Through wall hole in Area A and B

1) Permitted with these conditions:

a) Cavity 2 is not exposed.

b) Not more than two blades have a through wall hole.

c) Do the inspection again after each 100 cycles.

<1> After a minimum of four inspections, if the size of the through wall hole has not changed, increase the inspection interval to within every 400 cycles.

<2> After a minimum of four inspections, if the size of the through wall hole has changed, maintain the inspection interval at 100 cycles.

2) The Continue-In-Service limit is 25 cycles, with this condition:

a) Cavity 2 is not exposed on all blades.

(k) Through wall hole in Area C

1) ENGINES AFFECTED BY CFM56 SERVICE BULLETINS 72-0636, 72-0886 OR 72-0918;

Permitted with these conditions:

a) The hole size is less than 0.070 inch (1.8 mm) diameter, or 0.0038 in^2 (2.45 mm^2) equivalent area.

<1> Do the inspection again after each 100 cycles.

2) The Continue-In-Service limit is 50 cycles, with this condition:

a) The hole size is less than 0.30 inch (7.6 mm) diameter, or 0.0707 in^2 (45.61 mm^2) equivalent area.

(l) Discoloration and oxidation permitted with this condition:

1) Do the inspection again after each 400 cycles.

SUBTASK 72-00-00-210-057-F00

(5) When the inspection is complete, remove the borescope equipment.

(a) Turn the light source to OFF, but keep the blower ON until the lamp and case are cool.

D. Put the Airplane Back to Its Usual Condition

SUBTASK 72-00-00-210-058-F00

(1) Do these steps to install the borescope plugs as follow:

(a) Lubricate the threads of the borescope plugs with graphite compound, D00601 [CP2101], pure nickel special compound, D50034 [CP2619] or milk of magnesia compound, D50032 [CP1064].

(b) Install the borescope plugs.

1) Tighten each borescope plug to 57-63 pound-inches (6.5-7.1 Newton-meters).

2) Install a safety wire, G02345 [CP8001] or cable, G50065 [CP8006] on each borescope plug.

BOEING PROPRIETARY - Copyright © Unpublished Work - See title page for details

DATE	TAIL NUMBER	STATION	AIRLINE CARD NO.	BOEING CARD NO.
				72-210-02-01

MECH	INSP

SUBTASK 72-00-00-410-007-F00

(2) Do this task: Main Igniter Plug Installation, AMM TASK 74-21-02-400-801-F00.

SUBTASK 72-00-00-210-059-F00

(3) Do this task: Put the Airplane Back to Its Usual Condition, TASK 72-00-00-200-814-F00.

——— END OF TASK ———

BOEING PROPRIETARY - Copyright © Unpublished Work - See title page for details

TASK 72-00-00-200-814-F00

MECH	INSP

3. Put the Airplane Back to Its Usual Condition

A. General

(1) This task provides the instructions on how to put the airplane back to its usual condition after an inspection.

B. Put the Airplane Back to Its Usual Condition

SUBTASK 72-00-00-080-009-F00

CAUTION: MAKE SURE THERE ARE NO TOOLS, PARTS, OR OTHER UNWANTED MATERIAL IN THE INLET COWL. IF YOU DO NOT OBEY THESE INSTRUCTIONS, YOU CAN CAUSE DAMAGE TO THE ENGINE.

(1) Remove the protective mat, STD-585 from the inner surface of the inlet cowl.

SUBTASK 72-00-00-210-100-F00

(2) Disassemble the borescope equipment as follows:

(a) Turn the light source to OFF.

1) Keep the blower ON until the lamp and case are cool.

(b) Make sure that the power switch is OFF.

(c) Make sure that the light intensity control is set to minimum.

(d) Disconnect the power supply and the ground.

(e) Disconnect the extension and the viewer from the borescope.

(f) Disconnect the borescope from the fiber light cable.

(g) Disconnect the fiber light cable from the light source.

SUBTASK 72-00-00-210-101-F00

CAUTION: MAKE SURE THAT YOU INSTALL THE COVER ON THE GEARBOX. IF YOU DO NOT INSTALL THE COVER, ENGINE OIL LEAKS CAN OCCUR DURING OPERATION AND ENGINE DAMAGE CAN OCCUR.

(3) If not already done, do this task: Handcranking Drive Cover Installation, AMM TASK 72-63-01-400-801-F00.

SUBTASK 72-00-00-410-045-F00

WARNING: OBEY THE INSTRUCTIONS IN THE PROCEDURE TO CLOSE THE THRUST REVERSERS. IF YOU DO NOT OBEY THE INSTRUCTIONS, INJURIES TO PERSONS AND DAMAGE TO EQUIPMENT CAN OCCUR.

(4) Do these tasks in sequence to safely close the left and right thrust reversers:

(a) Do this task: Close the Thrust Reverser (Selection), AMM TASK 78-31-00-010-804-F00.

(b) Do this task: Close the Fan Cowl Panels, AMM TASK 71-11-02-410-801-F00.

(c) Do this task: Thrust Reverser Activation after Ground Maintenance, AMM TASK 78-31-00-440-803-F00.

BOEING PROPRIETARY - Copyright © Unpublished Work - See title page for details

DATE	TAIL NUMBER	STATION	AIRLINE CARD NO.	BOEING CARD NO.
				72-210-02-01

MECH	INSP

SUBTASK 72-00-00-860-078-F00

(5) For Engine 1, remove the safety tag and close this circuit breaker:

CAPT Electrical System Panel, P18-2

Row	Col	Number	Name
B	8	C01103	ENGINE 1 START VALVE

SUBTASK 72-00-00-860-079-F00

(6) For Engine 2, remove the safety tag and close this circuit breaker:

F/O Electrical System Panel, P6-2

Row	Col	Number	Name
C	4	C00154	ENGINE 2 START VALVE

SUBTASK 72-00-00-860-006-F00

(7) On the applicable engine, remove the DO-NOT-OPERATE tag from the start lever.

——— END OF TASK ———

BOEING PROPRIETARY - Copyright © Unpublished Work - See title page for details

DATE	TAIL NUMBER	STATION	AIRLINE CARD NO.	BOEING CARD NO.
				72-210-02-01

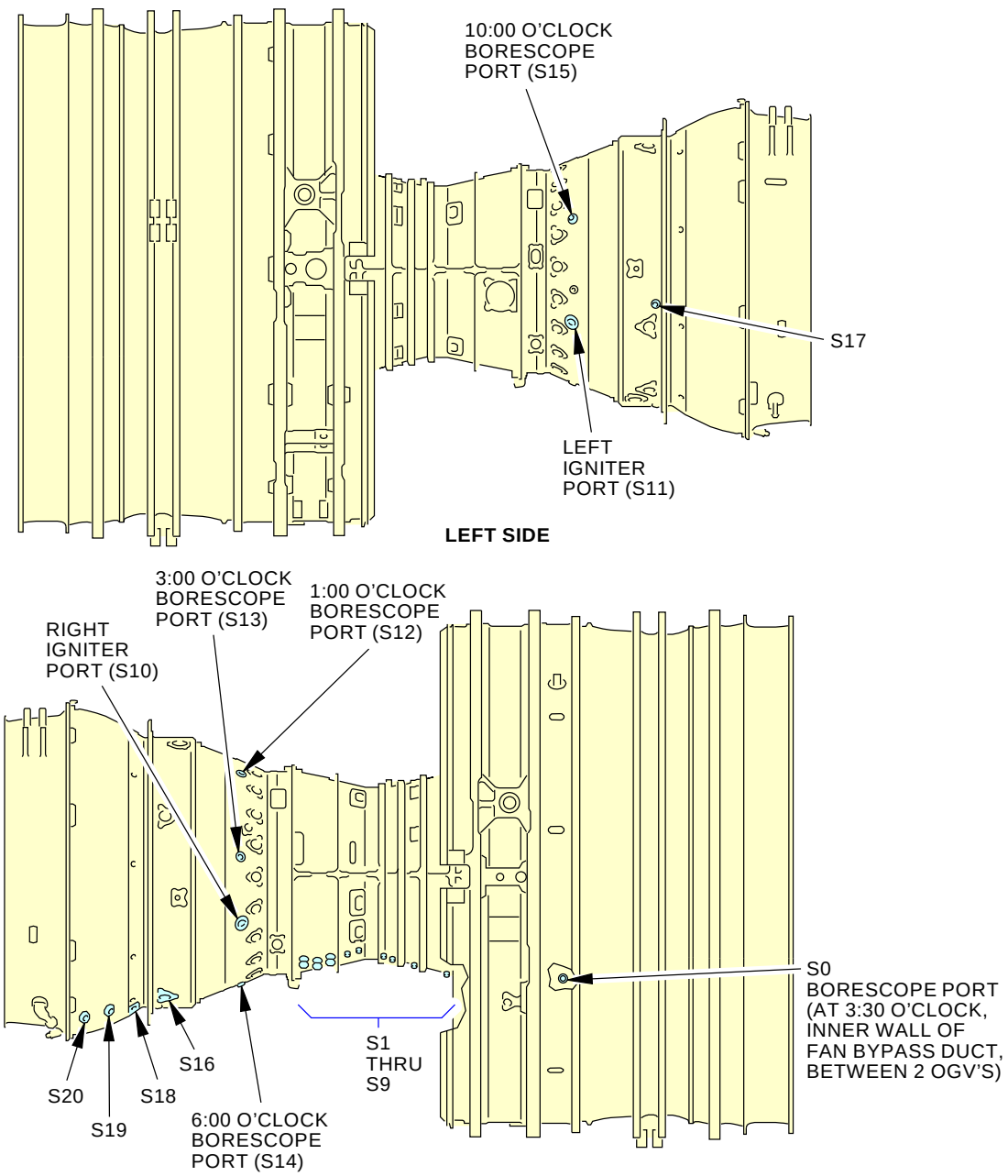

NOTE:

SOME ENGINE COMPONENTS
REMOVED FOR CLARITY.

S-M56-MM-03504-00-B
H50646 S0006582226_V2

Borescope Port Locations
Figure 1

BOEING PROPRIETARY - Copyright © Unpublished Work - See title page for details

DATE	TAIL NUMBER	STATION	AIRLINE CARD NO.	BOEING CARD NO.
				72-210-02-01

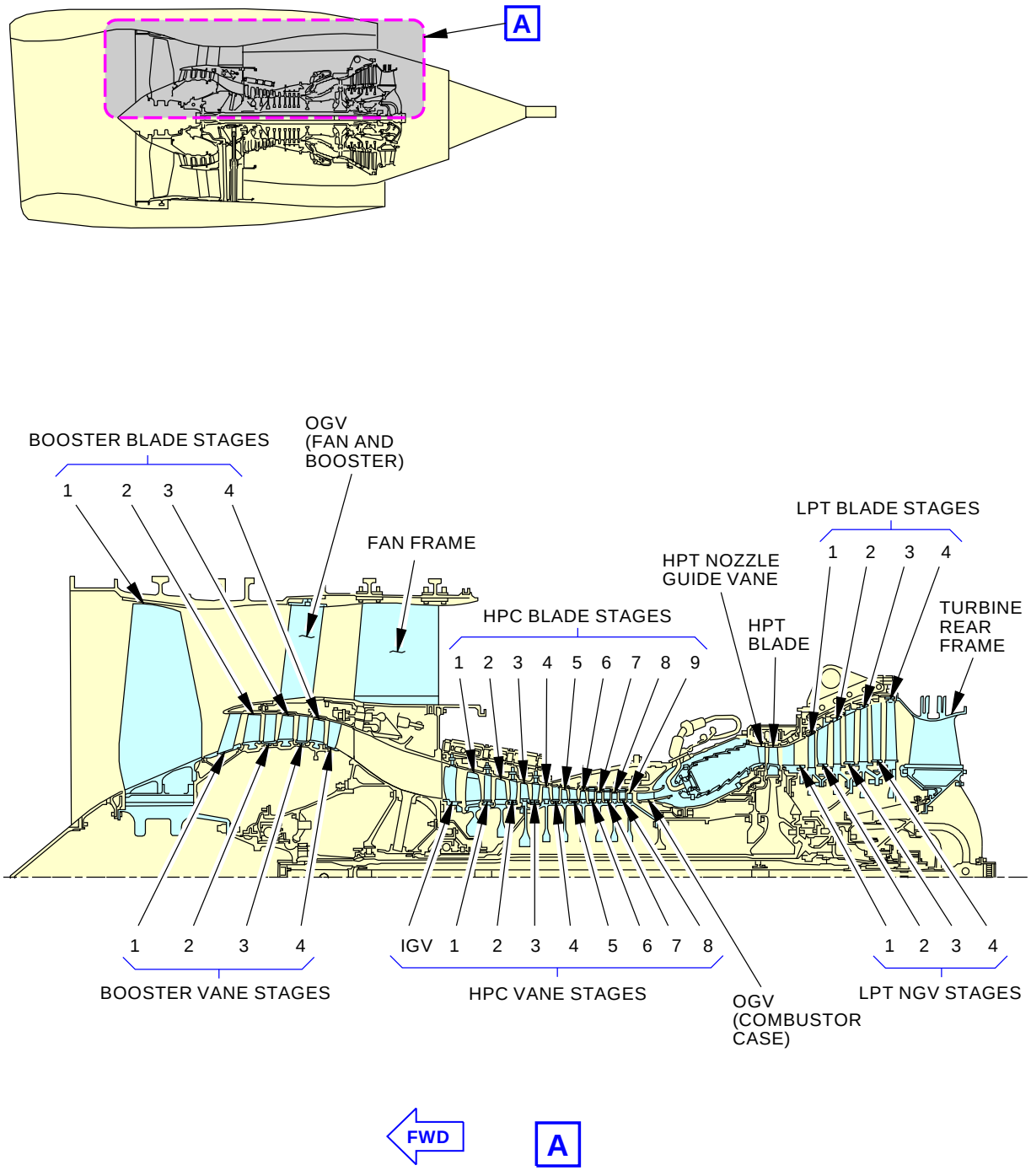

G47263 S0006582229_V3

Engine Airfoil Count
Figure 2 (Sheet 1 of 2)

BOEING PROPRIETARY - Copyright © Unpublished Work - See title page for details

NOMENCLATURE	STAGE	NUMBER OF BLADES
FAN AND BOOSTER	1	24
	2	74
	3	78
	4	74
HIGH PRESSURE COMPRESSOR (HPC)	1	38
	2	53
	3	60
	4	68
	5	75
	6	82
	7	82
	8	80
	9	76
HIGH PRESSURE TURBINE (HPT) NON-7BE ENGINE		80
HIGH PRESSURE TURBINE HPT 7BE ENGINE		76
LOW PRESSURE TURBINE (LPT) NON-7BE ENGINE	1	162
	2	150
	3	150
	4	134
LOW PRESSURE TURBINE LPT 7BE ENGINE	1	154
	2	134
	3	136
	4	138

G48151 S0006582230_V4

Engine Airfoil Count
Figure 2 (Sheet 2 of 2)

BOEING PROPRIETARY - Copyright © Unpublished Work - See title page for details

DATE	TAIL NUMBER	STATION	AIRLINE CARD NO.	BOEING CARD NO.
				72-210-02-01

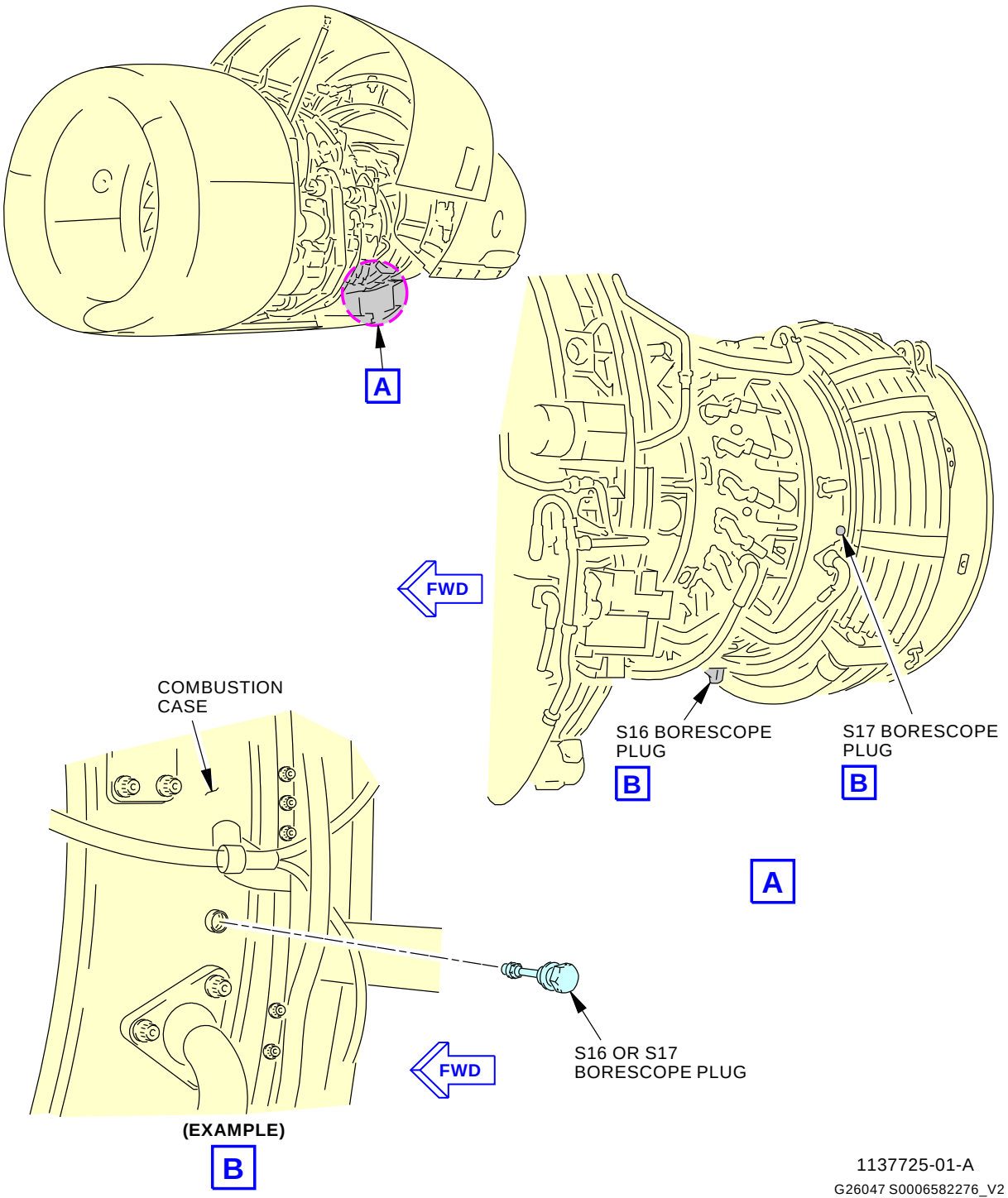

HPT Blades Borescope Plug Installation
Figure 3

BOEING PROPRIETARY - Copyright © Unpublished Work - See title page for details

DATE	TAIL NUMBER	STATION	AIRLINE CARD NO.	BOEING CARD NO.
				72-210-02-01

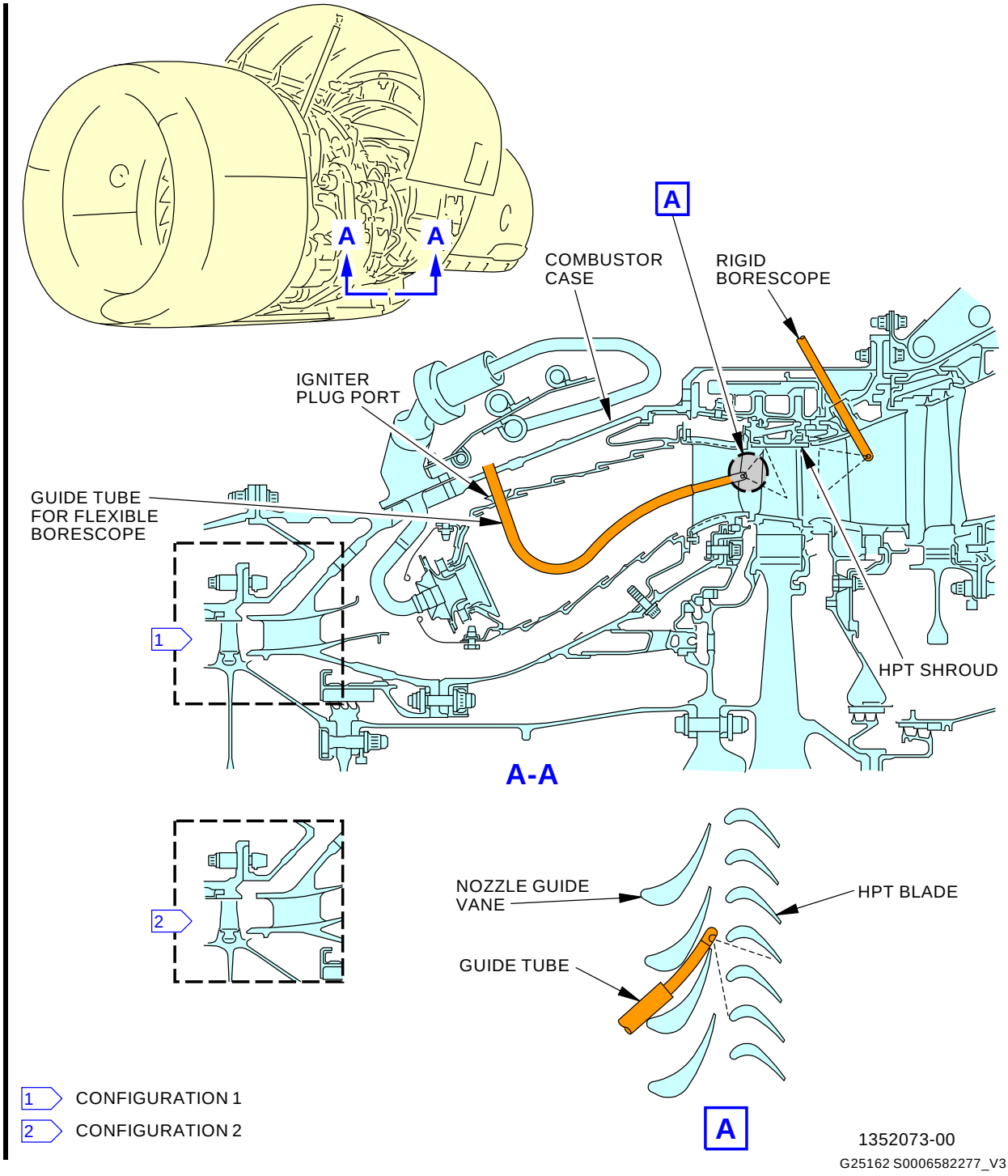

HPT Blade Borescope Inspection Locations
Figure 4

BOEING PROPRIETARY - Copyright © Unpublished Work - See title page for details

DATE	TAIL NUMBER	STATION	AIRLINE CARD NO.	BOEING CARD NO.
				72-210-02-01

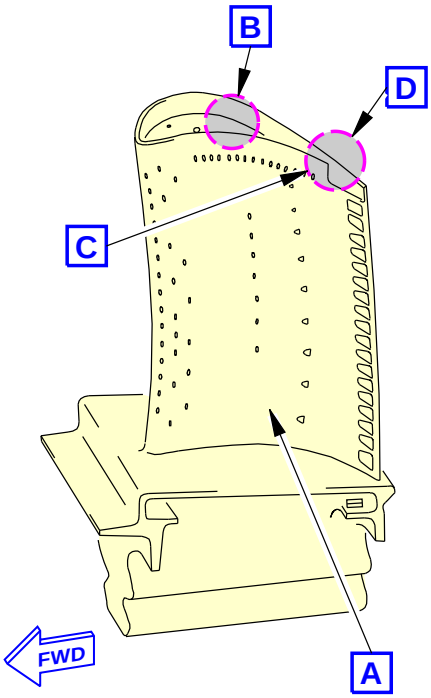

HPT BLADE
(EXAMPLE)

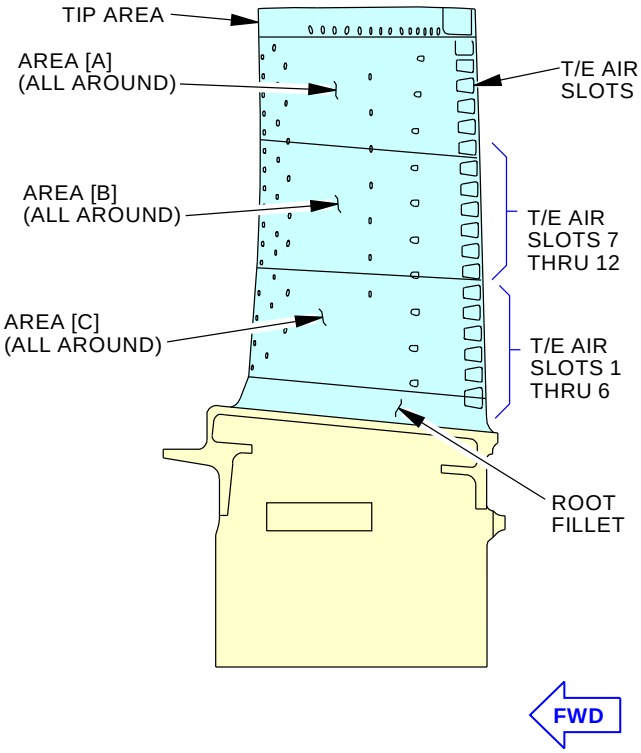

(SIDE VIEW)

A

NOTE:

80 BLADE HPT ROTOR CONFIGURATION

1352453-00

G24473 S0006582279_V3

HPT Blade Inspection Borescope Common Limits
Figure 5 (Sheet 1 of 2)

BOEING PROPRIETARY - Copyright © Unpublished Work - See title page for details

DATE	TAIL NUMBER	STATION	AIRLINE CARD NO.	BOEING CARD NO.
				72-210-02-01

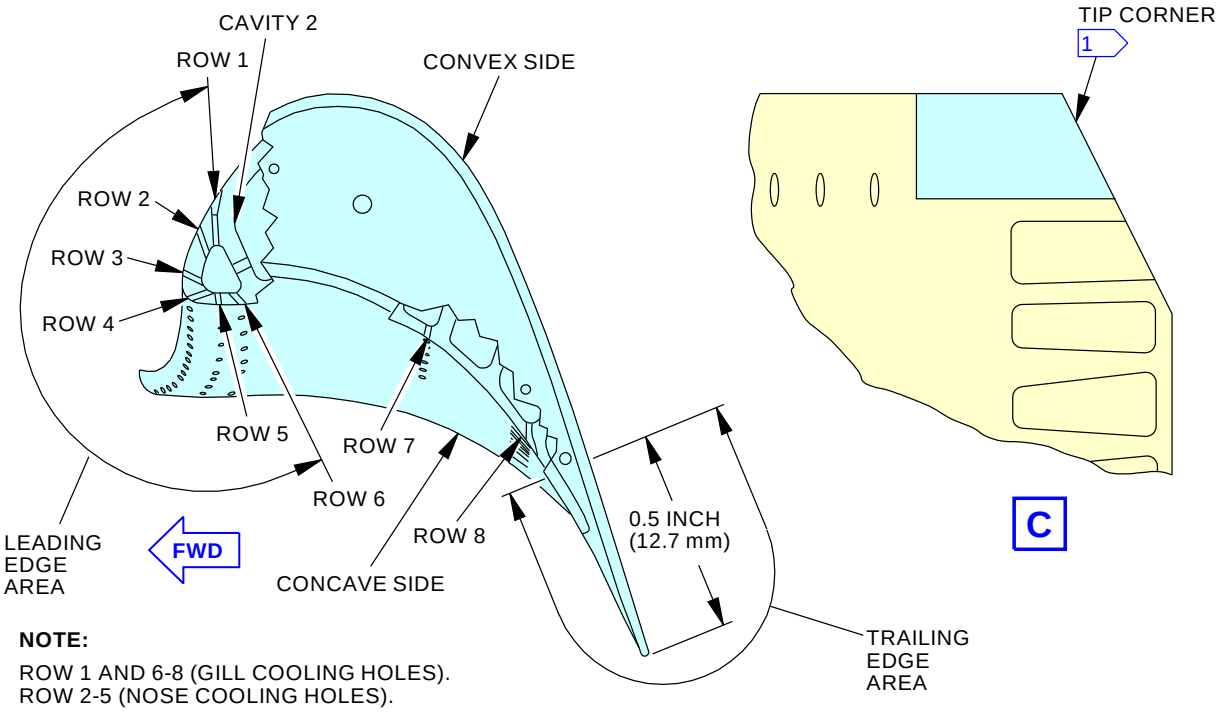

NOTE:

ROW 1 AND 6-8 (GILL COOLING HOLES).
ROW 2-5 (NOSE COOLING HOLES).

GMM-1163838-00-A
GMM-1137423-02-A

(TOP VIEW)

B

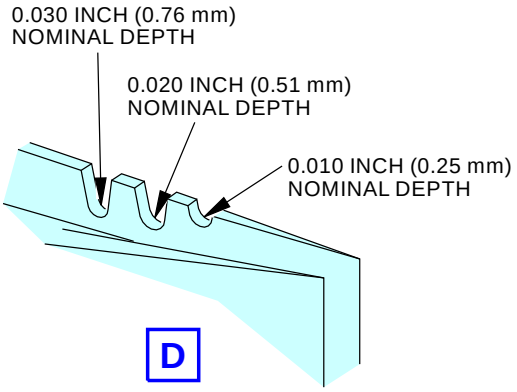

NOTE:

80 BLADE HPT ROTOR CONFIGURATION

1 SOME HPT BLADES HAVE THE TRAILING EDGE TIP CORNER "CROPPED" DURING MANUFACTURE. THIS IS ACCEPTABLE. DO NOT CONFUSE WITH SHROUD DROP RUBBING OF THE BLADE TIP. SHROUD DROP RUBBING RESULTS IN A SHALLOWER ANGLE.

1352454-00

H87161 S0006582280_V3

HPT Blade Inspection Borescope Common Limits
Figure 5 (Sheet 2 of 2)

BOEING PROPRIETARY - Copyright © Unpublished Work - See title page for details

DATE	TAIL NUMBER	STATION	AIRLINE CARD NO.	BOEING CARD NO.
				72-210-02-01

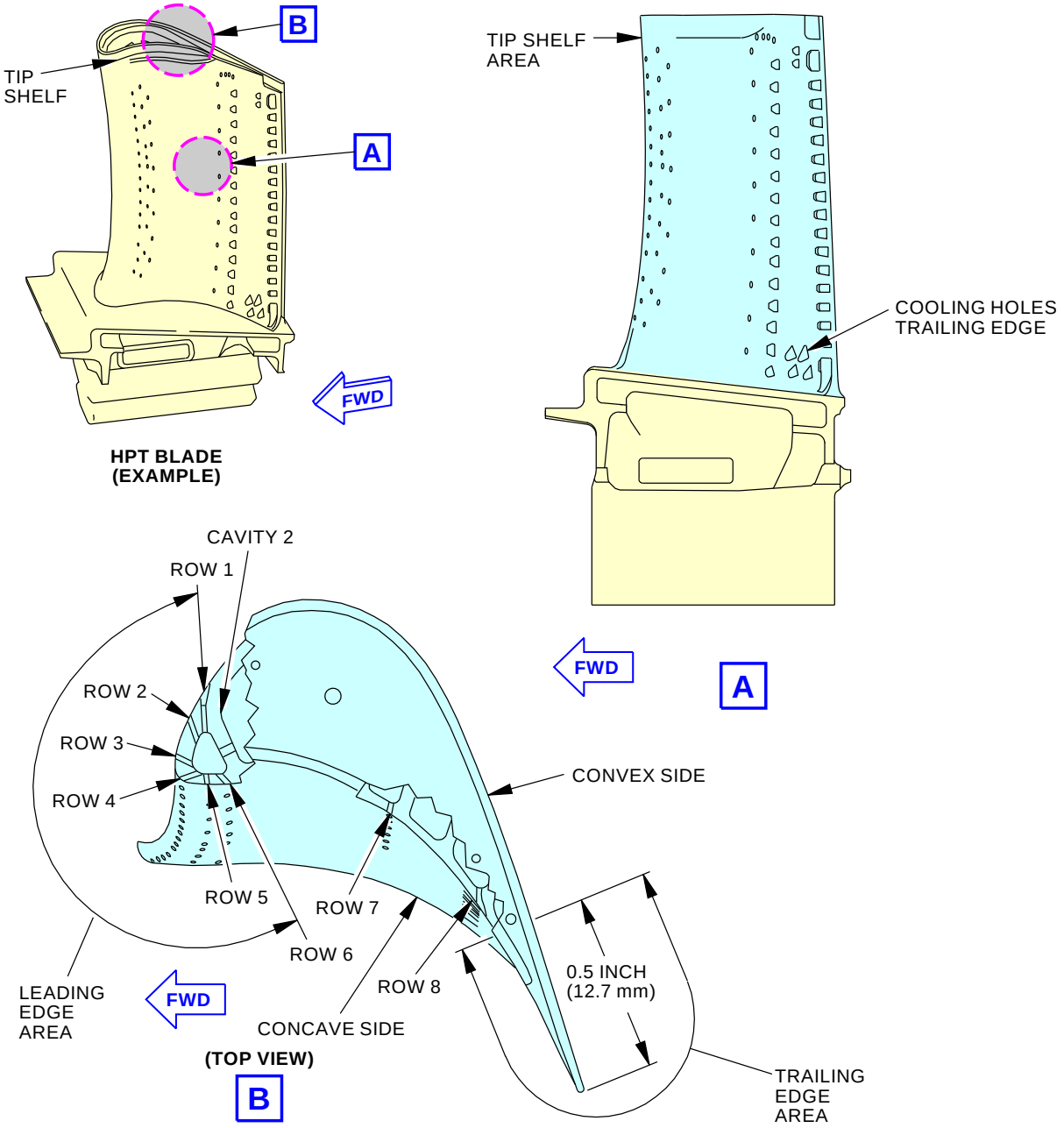

NOTE:

80 BLADE HPT ROTOR CONFIGURATION WITH ADDED TRAILING EDGE COOLING HOLES AND TIP SHELF AREA.

1352455-00
2090811 S0000441462_V2

HPT Blade With Tip Shelf Inspection
Figure 6

BOEING PROPRIETARY - Copyright © Unpublished Work - See title page for details

DATE	TAIL NUMBER	STATION	AIRLINE CARD NO.	BOEING CARD NO.
				72-210-02-01

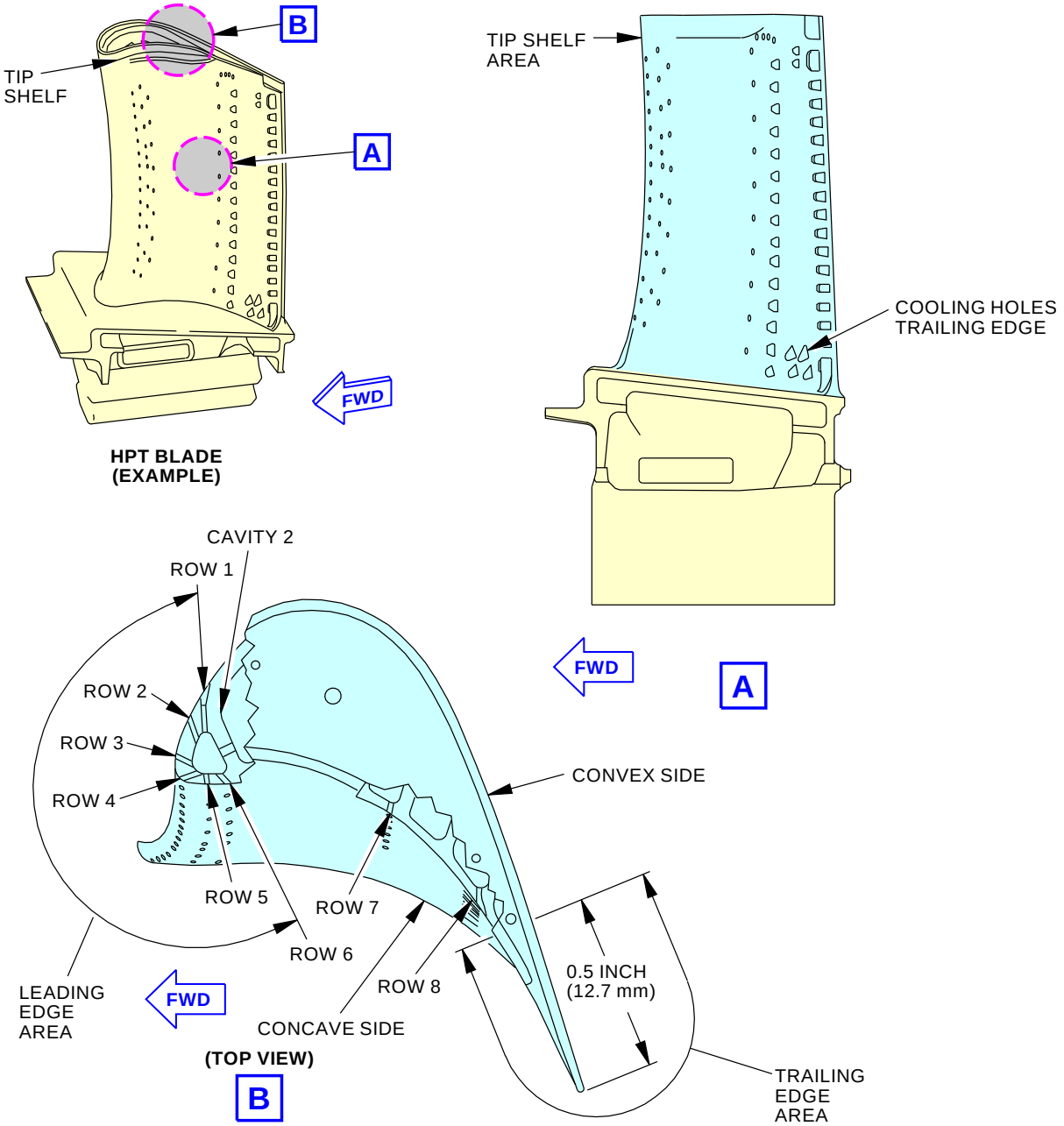

NOTE:

80 BLADE HPT ROTOR CONFIGURATION WITH ADDED TRAILING EDGE COOLING HOLES AND TIP SHELF AREA.

1352455-00
2090818 S0000441466_V4

HPT Blade With Contoured Platform and Tip Cap Baffle Inspection
Figure 7

BOEING PROPRIETARY - Copyright © Unpublished Work - See title page for details

AIRLINE CARD NO		TITLE			BOEING CARD NO.
		LEFT ENGINE HPT FRONT SHAFT			72-220-01-01
DATE	TASK REPLACE				RELATED CARD
TAIL NUMBER	WORK AREA LEFT ENGINE	VERSION 1.1	THRESHOLD LIF LIM	REPEAT	APPLICABILITY AIRPLANE: ALL ENGINE: ALL
STATION	SKILL ENGIN				
		ACCESS 413 414 415 416			ZONE 411

Discard left engine HPT front shaft at manufacturer's life limit.

Note: Refer to the engine shop manual, chapter 5, for life limits.

BOEING PROPRIETARY - Copyright © Unpublished Work - See title page for details

DATE	TAIL NUMBER	STATION	AIRLINE CARD NO.	BOEING CARD NO.
				72-220-01-01

MECH	INSP

TASK 72-99-99-000-809-F00

1. Discard the HPT Front Shaft

A. Procedure

SUBTASK 72-99-99-020-008-F00

(1) Remove and discard the HPT front shaft.

——— END OF TASK ———

BOEING PROPRIETARY - Copyright © Unpublished Work - See title page for details

AIRLINE CARD NO		TITLE			BOEING CARD NO.
		RIGHT ENGINE HPT FRONT SHAFT			72-220-02-01
DATE	TASK REPLACE				RELATED CARD
TAIL NUMBER	WORK AREA RIGHT ENGINE	VERSION 1.1	THRESHOLD LIF LIM	REPEAT	APPLICABILITY AIRPLANE: ALL ENGINE: ALL
STATION	SKILL ENGIN				
		ACCESS 423 424 425 426			ZONE 421

Discard right engine HPT front shaft at manufacturer's life limit.

Note: Refer to the engine shop manual, chapter 5, for life limits.

BOEING PROPRIETARY - Copyright © Unpublished Work - See title page for details

DATE	TAIL NUMBER	STATION	AIRLINE CARD NO.	BOEING CARD NO.
				72-220-02-01

MECH	INSP

TASK 72-99-99-000-809-F00

1. Discard the HPT Front Shaft

A. Procedure

SUBTASK 72-99-99-020-008-F00

(1) Remove and discard the HPT front shaft.

——— END OF TASK ———

BOEING PROPRIETARY - Copyright © Unpublished Work - See title page for details

AIRLINE CARD NO		TITLE			BOEING CARD NO.
		LEFT HPT FRONT ROTATING AIR SEAL			72-230-01-01
DATE	TASK REPLACE				RELATED CARD
TAIL NUMBER	WORK AREA LEFT ENGINE	VERSION 1.1	THRESHOLD LIF LIM	REPEAT	APPLICABILITY AIRPLANE: ALL ENGINE: ALL
STATION	SKILL ENGIN				
		ACCESS 413 414 415 416			ZONE 411

Discard left HPT front rotating air seal at manufacturer's life limit.

Note: Refer to the engine shop manual, chapter 5, for life limits.

BOEING PROPRIETARY - Copyright © Unpublished Work - See title page for details

DATE	TAIL NUMBER	STATION	AIRLINE CARD NO.	BOEING CARD NO.
				72-230-01-01

MECH	INSP

TASK 72-99-99-000-810-F00

1. Discard the HPT Front Rotating Air Seal

A. Procedure

SUBTASK 72-99-99-020-009-F00

(1) Remove and discard the HPT front rotating air seal.

——— END OF TASK ———

BOEING PROPRIETARY - Copyright © Unpublished Work - See title page for details

AIRLINE CARD NO		TITLE			BOEING CARD NO.
		RIGHT HPT FRONT ROTATING AIR SEAL			72-230-02-01
DATE	TASK REPLACE				RELATED CARD
TAIL NUMBER	WORK AREA RIGHT ENGINE	VERSION 1.1	THRESHOLD LIF LIM	REPEAT	APPLICABILITY AIRPLANE: ALL ENGINE: ALL
STATION	SKILL ENGIN				
		ACCESS 423 424 425 426			ZONE 421

Discard right HPT front rotating air seal at manufacturer's life limit.

Note: Refer to the engine shop manual, chapter 5, for life limits.

BOEING PROPRIETARY - Copyright © Unpublished Work - See title page for details

DATE	TAIL NUMBER	STATION	AIRLINE CARD NO.	BOEING CARD NO.
				72-230-02-01

MECH	INSP

TASK 72-99-99-000-810-F00

1. Discard the HPT Front Rotating Air Seal

A. Procedure

SUBTASK 72-99-99-020-009-F00

(1) Remove and discard the HPT front rotating air seal.

——— END OF TASK ———

BOEING PROPRIETARY - Copyright © Unpublished Work - See title page for details

AIRLINE CARD NO		TITLE			BOEING CARD NO.
		LEFT ENGINE HPT DISK			72-240-01-01
DATE	TASK REPLACE				RELATED CARD
TAIL NUMBER	WORK AREA LEFT ENGINE	VERSION 1.1	THRESHOLD LIF LIM	REPEAT	APPLICABILITY AIRPLANE: ALL ENGINE: ALL
STATION	SKILL ENGIN				
		ACCESS 413 414 415 416			ZONE 411

Discard left engine HPT disk at manufacturer's life limit.

Note: Refer to the engine shop manual, chapter 5, for life limits.

BOEING PROPRIETARY - Copyright © Unpublished Work - See title page for details

DATE	TAIL NUMBER	STATION	AIRLINE CARD NO.	BOEING CARD NO.
				72-240-01-01

MECH	INSP

TASK 72-99-99-000-811-F00

1. Discard the HPT Disk

A. Procedure

SUBTASK 72-99-99-020-010-F00

(1) Remove and discard the HPT disk.

——— END OF TASK ———

BOEING PROPRIETARY - Copyright © Unpublished Work - See title page for details

AIRLINE CARD NO		TITLE			BOEING CARD NO.
		RIGHT ENGINE HPT DISK			72-240-02-01
DATE	TASK REPLACE				RELATED CARD
TAIL NUMBER	WORK AREA RIGHT ENGINE	VERSION 1.1	THRESHOLD LIF LIM	REPEAT	APPLICABILITY AIRPLANE: ALL ENGINE: ALL
STATION	SKILL ENGIN				
		ACCESS 423 424 425 426			ZONE 421

Discard right engine HPT disk at manufacturer's life limit.

Note: Refer to the engine shop manual, chapter 5, for life limits.

BOEING PROPRIETARY - Copyright © Unpublished Work - See title page for details

DATE	TAIL NUMBER	STATION	AIRLINE CARD NO.	BOEING CARD NO.
				72-240-02-01

MECH	INSP

TASK 72-99-99-000-811-F00

1. Discard the HPT Disk

A. Procedure

SUBTASK 72-99-99-020-010-F00

(1) Remove and discard the HPT disk.

——— END OF TASK ———

BOEING PROPRIETARY - Copyright © Unpublished Work - See title page for details

AIRLINE CARD NO		TITLE			BOEING CARD NO.
		LEFT ENGINE HPT REAR SHAFT			72-250-01-01
DATE	TASK REPLACE				RELATED CARD
TAIL NUMBER	WORK AREA LEFT ENGINE	VERSION 1.1	THRESHOLD LIF LIM	REPEAT	APPLICABILITY AIRPLANE: ALL ENGINE: ALL
STATION	SKILL ENGIN				
		ACCESS 413 414 415 416			ZONE 411

Discard left engine HPT rear shaft at manufacturer's life limit.

Note: Refer to the engine shop manual, chapter 5, for life limits.

BOEING PROPRIETARY - Copyright © Unpublished Work - See title page for details

DATE	TAIL NUMBER	STATION	AIRLINE CARD NO.	BOEING CARD NO.
				72-250-01-01

MECH	INSP

TASK 72-99-99-000-812-F00

1. Discard the HPT Front and Rear Shafts

A. Procedure

SUBTASK 72-99-99-020-011-F00

(1) Remove and discard the HPT front and rear shafts.

——— END OF TASK ———

BOEING PROPRIETARY - Copyright © Unpublished Work - See title page for details

AIRLINE CARD NO		TITLE			BOEING CARD NO.
		RIGHT ENGINE HPT REAR SHAFT			72-250-02-01
DATE	TASK REPLACE				RELATED CARD
TAIL NUMBER	WORK AREA RIGHT ENGINE	VERSION 1.1	THRESHOLD LIF LIM	REPEAT	APPLICABILITY AIRPLANE: ALL ENGINE: ALL
STATION	SKILL ENGIN				
		ACCESS 423 424 425 426			ZONE 421

Discard right engine HPT rear shaft at manufacturer's life limit.

Note: Refer to the engine shop manual, chapter 5, for life limits.

BOEING PROPRIETARY - Copyright © Unpublished Work - See title page for details

DATE	TAIL NUMBER	STATION	AIRLINE CARD NO.	BOEING CARD NO.
				72-250-02-01

MECH	INSP

TASK 72-99-99-000-812-F00

1. Discard the HPT Front and Rear Shafts

A. Procedure

SUBTASK 72-99-99-020-011-F00

(1) Remove and discard the HPT front and rear shafts.

——— END OF TASK ———

BOEING PROPRIETARY - Copyright © Unpublished Work - See title page for details

AIRLINE CARD NO		TITLE			BOEING CARD NO.
		LEFT ENGINE LPT ROTOR SUPPORT			72-270-01-01
DATE	TASK REPLACE				RELATED CARD
TAIL NUMBER	WORK AREA LEFT ENGINE	VERSION 1.1	THRESHOLD LIF LIM	REPEAT	APPLICABILITY AIRPLANE: ALL ENGINE: ALL
STATION	SKILL ENGIN				
		ACCESS 413 414 415 416			ZONE 411

Discard left engine LPT rotor support at manufacturer's life limit.

Note: Refer to the engine shop manual, chapter 5, for life limits.

BOEING PROPRIETARY - Copyright © Unpublished Work - See title page for details

DATE	TAIL NUMBER	STATION	AIRLINE CARD NO.	BOEING CARD NO.
				72-270-01-01

MECH	INSP

TASK 72-99-99-000-813-F00

1. Discard the LPT Rotor Support

A. Procedure

SUBTASK 72-99-99-000-002-F00

(1) Remove and discard the LPT rotor support.

——— END OF TASK ———

BOEING PROPRIETARY - Copyright © Unpublished Work - See title page for details

AIRLINE CARD NO		TITLE			BOEING CARD NO.
		RIGHT ENGINE LPT ROTOR SUPPORT			72-270-02-01
DATE	TASK REPLACE				RELATED CARD
TAIL NUMBER	WORK AREA RIGHT ENGINE	VERSION 1.1	THRESHOLD LIF LIM	REPEAT	APPLICABILITY AIRPLANE: ALL ENGINE: ALL
STATION	SKILL ENGIN				
		ACCESS 423 424 425 426			ZONE 421

Discard right engine LPT rotor support at manufacturer's life limit.

Note: Refer to the engine shop manual, chapter 5, for life limits.

BOEING PROPRIETARY - Copyright © Unpublished Work - See title page for details

DATE	TAIL NUMBER	STATION	AIRLINE CARD NO.	BOEING CARD NO.
				72-270-02-01

MECH	INSP

TASK 72-99-99-000-813-F00

1. Discard the LPT Rotor Support

A. Procedure

SUBTASK 72-99-99-000-002-F00

(1) Remove and discard the LPT rotor support.

——— END OF TASK ———

BOEING PROPRIETARY - Copyright © Unpublished Work - See title page for details

AIRLINE CARD NO		TITLE			BOEING CARD NO.
		LEFT ENGINE LPT SHAFT			72-280-01-01
DATE	TASK REPLACE				RELATED CARD
TAIL NUMBER	WORK AREA LEFT ENGINE	VERSION 1.1	THRESHOLD LIF LIM	REPEAT	APPLICABILITY AIRPLANE: ALL ENGINE: ALL
STATION	SKILL ENGIN				
		ACCESS 413 414 415 416			ZONE 411

Discard left engine LPT shaft at manufacturer's life limit.

Note: Refer to the engine shop manual, chapter 5, for life limits.

BOEING PROPRIETARY - Copyright © Unpublished Work - See title page for details

DATE	TAIL NUMBER	STATION	AIRLINE CARD NO.	BOEING CARD NO.
				72-280-01-01

MECH	INSP

TASK 72-99-99-000-814-F00

1. Discard the LPT Shaft

A. Procedure

SUBTASK 72-99-99-000-003-F00

(1) Remove and discard the LPT shaft.

——— END OF TASK ———

BOEING PROPRIETARY - Copyright © Unpublished Work - See title page for details

AIRLINE CARD NO		TITLE			BOEING CARD NO.
		RIGHT ENGINE LPT SHAFT			72-280-02-01
DATE	TASK REPLACE				RELATED CARD
TAIL NUMBER	WORK AREA RIGHT ENGINE	VERSION 1.1	THRESHOLD LIF LIM	REPEAT	APPLICABILITY AIRPLANE: ALL ENGINE: ALL
STATION	SKILL ENGIN				
		ACCESS 423 424 425 426			ZONE 421

Discard right engine LPT shaft at manufacutrer's life limit.

Note: Refer to the engine shop manual, chapter 5, for life limits.

BOEING PROPRIETARY - Copyright © Unpublished Work - See title page for details

DATE	TAIL NUMBER	STATION	AIRLINE CARD NO.	BOEING CARD NO.
				72-280-02-01

MECH	INSP

TASK 72-99-99-000-814-F00

1. Discard the LPT Shaft

A. Procedure

SUBTASK 72-99-99-000-003-F00

(1) Remove and discard the LPT shaft.

——— END OF TASK ———

BOEING PROPRIETARY - Copyright © Unpublished Work - See title page for details

AIRLINE CARD NO		TITLE			BOEING CARD NO.
		LEFT ENGINE STAGE 1, 2, 3, 4 LPT DISKS			72-290-01-01
DATE	TASK REPLACE				RELATED CARD
TAIL NUMBER	WORK AREA LEFT ENGINE	VERSION 1.1	THRESHOLD LIF LIM	REPEAT	APPLICABILITY AIRPLANE: ALL ENGINE: ALL
STATION	SKILL ENGIN				
		ACCESS 413 414 415 416			ZONE 411

Discard left engine stage 1 LPT disk, stage 2 LPT disk, stage 3 LPT disk, stage 4 LPT disk at manufacutrer's life limit.

Note: Refer to the engine shop manual, chapter 5, for life limits.

BOEING PROPRIETARY - Copyright © Unpublished Work - See title page for details

DATE	TAIL NUMBER	STATION	AIRLINE CARD NO.	BOEING CARD NO.
				72-290-01-01

MECH	INSP

TASK 72-99-99-000-815-F00

1. Discard the LPT Stage Disks

A. Procedure

SUBTASK 72-99-99-000-004-F00

(1) Remove and discard the LPT stage 1 disk, the stage 2 disk, the stage 3 disk, and the stage 4 disk.

——— END OF TASK ———

BOEING PROPRIETARY - Copyright © Unpublished Work - See title page for details

AIRLINE CARD NO		TITLE			BOEING CARD NO.
		RIGHT ENGINE STAGE 1, 2, 3, 4 LPT DISKS			72-290-02-01
DATE	TASK REPLACE				RELATED CARD
TAIL NUMBER	WORK AREA RIGHT ENGINE	VERSION 1.1	THRESHOLD LIF LIM	REPEAT	APPLICABILITY AIRPLANE: ALL ENGINE: ALL
STATION	SKILL ENGIN				
		ACCESS 423 424 425 426			ZONE 421

Discard right engine stage 1 LPT disk, stage 2 LPT disk, stage 3 LPT disk, stage 4 LPT disk at manufacutrer's life limit.

Note: Refer to the engine shop manual, chapter 5, for life limits.

BOEING PROPRIETARY - Copyright © Unpublished Work - See title page for details

DATE	TAIL NUMBER	STATION	AIRLINE CARD NO.	BOEING CARD NO.
				72-290-02-01

MECH	INSP

TASK 72-99-99-000-815-F00

1. Discard the LPT Stage Disks

A. Procedure

SUBTASK 72-99-99-000-004-F00

(1) Remove and discard the LPT stage 1 disk, the stage 2 disk, the stage 3 disk, and the stage 4 disk.

——— END OF TASK ———

BOEING PROPRIETARY - Copyright © Unpublished Work - See title page for details

AIRLINE CARD NO		TITLE			BOEING CARD NO.
		LEFT ENGINE STAGE AFT MOUNTS CLEVIS			72-300-01-01
DATE	TASK VISUAL CHECK				RELATED CARD
TAIL NUMBER	WORK AREA LEFT ENGINE	VERSION 1.1	THRESHOLD 7500 FH	REPEAT 7500 FH	APPLICABILITY AIRPLANE: ALL ENGINE: ALL
STATION	SKILL AIRPL				
		ACCESS 413 414 415 416			ZONE 411

Visual check of the left engine AFT mounts clevis for structural integrity failure.

A. References

Reference	Title
AMM 72-56-00-300-802-F00	Bushings in the Clevis Mounts of the TRF Assembly Replacement (P/B 801)
AMM 78-31-00-010-801-F00	Open the Thrust Reverser (Selection) (P/B 201)
AMM 78-31-00-010-804-F00	Close the Thrust Reverser (Selection) (P/B 201)

BOEING PROPRIETARY - Copyright © Unpublished Work - See title page for details

DATE	TAIL NUMBER	STATION	AIRLINE CARD NO.	BOEING CARD NO.
				72-300-01-01

MECH	INSP

TASK 72-56-00-200-802-F00

1. Turbine Frame Assembly Engine Mounting Lugs Inspection

(Figure 1)

A. General

(1) This task gives the procedure to do a visual check of the engine mounting lugs on the turbine frame assembly.

(2) The turbine frame assembly is at the aft end of the engine.

B. Procedure

SUBTASK 72-56-00-010-004-F00

WARNING: DO THESE SPECIFIED TASKS IN THE CORRECT SEQUENCE BEFORE YOU OPEN THE THRUST REVERSER: RETRACT THE LEADING EDGE, DO THE DEACTIVATION PROCEDURES FOR THE LEADING EDGE AND THE THRUST REVERSER (FOR GROUND MAINTENANCE), AND OPEN THE FAN COWL PANELS. IF YOU DO NOT OBEY THE ABOVE SEQUENCE, INJURIES TO PERSONS AND DAMAGE TO EQUIPMENT CAN OCCUR.

(1) Do this task: Open the Thrust Reverser (Selection), AMM TASK 78-31-00-010-801-F00.

SUBTASK 72-56-00-200-007-F00

(2) Do a visual check of the engine mounting lugs for damage:

(a) Cracks that extend from the bolt holes

1) Not serviceable.

2) A Continue-In-Service limit of 10 cycles is permitted for one crack that goes out of one mounting lug bolt hole, not more than 0.25 inch (6.35 mm) in length.

(b) Cracks in the areas of the engine mounting lugs (includes the welds)

1) Not serviceable.

2) A Continue-In-Service limit of 10 cycles is permitted for one crack 0.25 inch (6.35 mm) in length.

(c) Nicks, scores, and scratches

1) There is no limit to the number of nicks, scores, and scratches which are permitted with these conditions:

a) Not more than 1.0 inch (25.4 mm) in length

b) Not more than 0.02 inch (0.51 mm) in depth, after you remove the high metal

c) Minimum separation of 1.0 inch (25.4 mm) between each nick, score or scratch.

(d) Disengaged, loose, or missing bushings in the clevis mount TRF:

1) On-Wing;

a) Disengaged bushings are serviceable

2) Off-Wing;

BOEING PROPRIETARY - Copyright © Unpublished Work - See title page for details

DATE	TAIL NUMBER	STATION	AIRLINE CARD NO.	BOEING CARD NO.
				72-300-01-01

MECH	INSP

a) If the aft mount is removed, do the check for disengaged, loose or missing bushings (AMM TASK 72-56-00-300-802-F00).

SUBTASK 72-56-00-410-004-F00

WARNING: OBEY THE INSTRUCTIONS IN THE PROCEDURE TO CLOSE THE THRUST REVERSERS. IF YOU DO NOT OBEY THE INSTRUCTIONS, INJURIES TO PERSONS AND DAMAGE TO EQUIPMENT CAN OCCUR.

(3) Do this task: Close the Thrust Reverser (Selection), AMM TASK 78-31-00-010-804-F00.

——— END OF TASK ———

BOEING PROPRIETARY - Copyright © Unpublished Work - See title page for details

DATE	TAIL NUMBER	STATION	AIRLINE CARD NO.	BOEING CARD NO.
				72-300-01-01

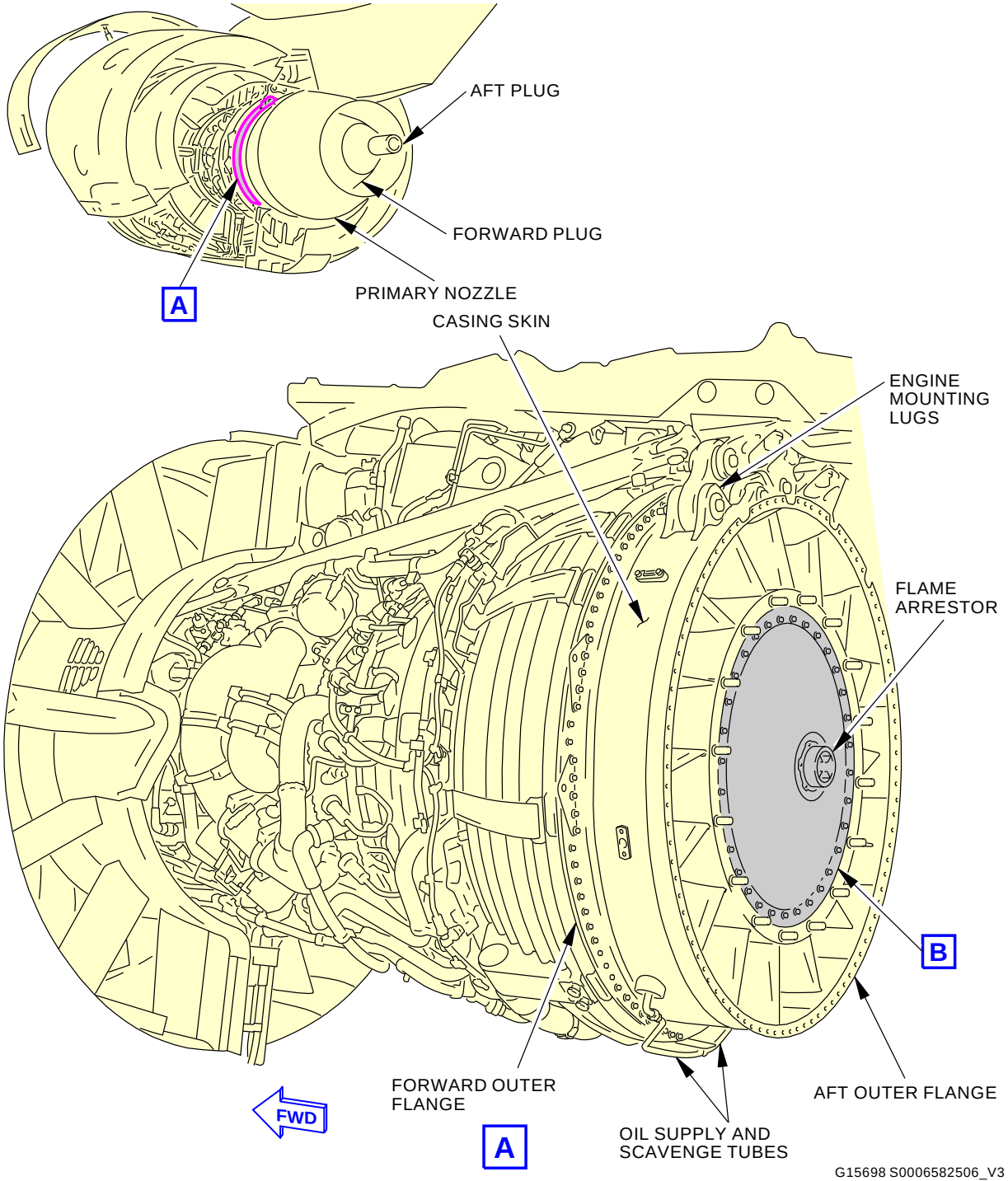

Turbine Frame Assembly Inspection
Figure 1 (Sheet 1 of 2)

BOEING PROPRIETARY - Copyright © Unpublished Work - See title page for details

DATE	TAIL NUMBER	STATION	AIRLINE CARD NO.	BOEING CARD NO.
				72-300-01-01

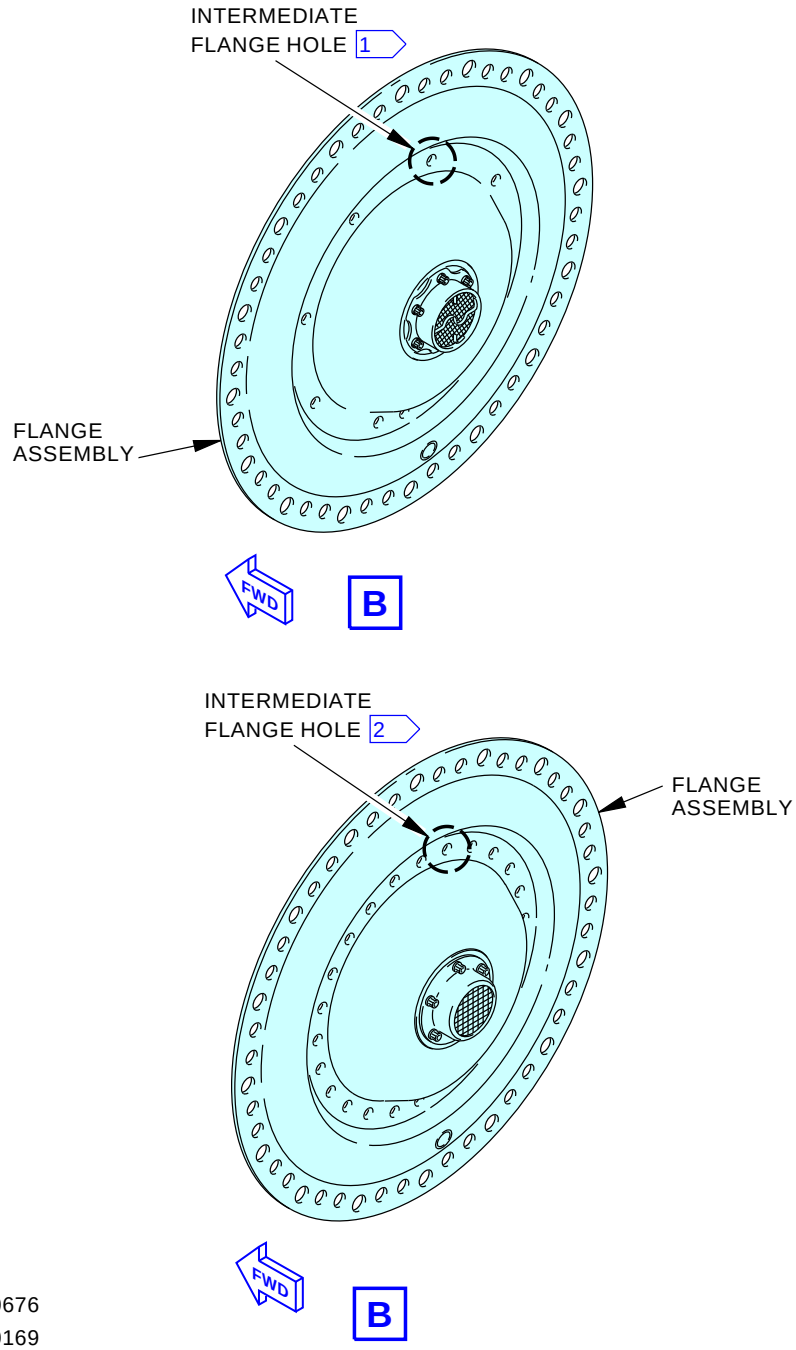

1 POST-SB 72-0676
2 POST-SB 72-0169

2203929 S0000491333_V2

Turbine Frame Assembly Inspection
Figure 1 (Sheet 2 of 2)

BOEING PROPRIETARY - Copyright © Unpublished Work - See title page for details

AIRLINE CARD NO		TITLE			BOEING CARD NO.
		RIGHT ENGINE STAGE AFT MOUNTS CLEVIS			72-300-02-01
DATE	TASK VISUAL CHECK				RELATED CARD
TAIL NUMBER	WORK AREA RIGHT ENGINE	VERSION 1.1	THRESHOLD 7500 FH	REPEAT 7500 FH	APPLICABILITY AIRPLANE: ALL ENGINE: ALL
STATION	SKILL AIRPL				
		ACCESS 423 424 425 426			ZONE 421

Visual check of the right engine AFT mount clevis for structural integrity failure.

A. References

Reference	Title
AMM 72-56-00-300-802-F00	Bushings in the Clevis Mounts of the TRF Assembly Replacement (P/B 801)
AMM 78-31-00-010-801-F00	Open the Thrust Reverser (Selection) (P/B 201)
AMM 78-31-00-010-804-F00	Close the Thrust Reverser (Selection) (P/B 201)

BOEING PROPRIETARY - Copyright © Unpublished Work - See title page for details

DATE	TAIL NUMBER	STATION	AIRLINE CARD NO.	BOEING CARD NO.
				72-300-02-01

MECH	INSP

TASK 72-56-00-200-802-F00

1. Turbine Frame Assembly Engine Mounting Lugs Inspection

(Figure 1)

A. General

(1) This task gives the procedure to do a visual check of the engine mounting lugs on the turbine frame assembly.

(2) The turbine frame assembly is at the aft end of the engine.

B. Procedure

SUBTASK 72-56-00-010-004-F00

WARNING: DO THESE SPECIFIED TASKS IN THE CORRECT SEQUENCE BEFORE YOU OPEN THE THRUST REVERSER: RETRACT THE LEADING EDGE, DO THE DEACTIVATION PROCEDURES FOR THE LEADING EDGE AND THE THRUST REVERSER (FOR GROUND MAINTENANCE), AND OPEN THE FAN COWL PANELS. IF YOU DO NOT OBEY THE ABOVE SEQUENCE, INJURIES TO PERSONS AND DAMAGE TO EQUIPMENT CAN OCCUR.

(1) Do this task: Open the Thrust Reverser (Selection), AMM TASK 78-31-00-010-801-F00.

SUBTASK 72-56-00-200-007-F00

(2) Do a visual check of the engine mounting lugs for damage:

(a) Cracks that extend from the bolt holes

1) Not serviceable.

2) A Continue-In-Service limit of 10 cycles is permitted for one crack that goes out of one mounting lug bolt hole, not more than 0.25 inch (6.35 mm) in length.

(b) Cracks in the areas of the engine mounting lugs (includes the welds)

1) Not serviceable.

2) A Continue-In-Service limit of 10 cycles is permitted for one crack 0.25 inch (6.35 mm) in length.

(c) Nicks, scores, and scratches

1) There is no limit to the number of nicks, scores, and scratches which are permitted with these conditions:

a) Not more than 1.0 inch (25.4 mm) in length

b) Not more than 0.02 inch (0.51 mm) in depth, after you remove the high metal

c) Minimum separation of 1.0 inch (25.4 mm) between each nick, score or scratch.

(d) Disengaged, loose, or missing bushings in the clevis mount TRF:

1) On-Wing;

a) Disengaged bushings are serviceable

2) Off-Wing;

BOEING PROPRIETARY - Copyright © Unpublished Work - See title page for details

DATE	TAIL NUMBER	STATION	AIRLINE CARD NO.	BOEING CARD NO.
				72-300-02-01

MECH	INSP

a) If the aft mount is removed, do the check for disengaged, loose or missing bushings (AMM TASK 72-56-00-300-802-F00).

SUBTASK 72-56-00-410-004-F00

WARNING: OBEY THE INSTRUCTIONS IN THE PROCEDURE TO CLOSE THE THRUST REVERSERS. IF YOU DO NOT OBEY THE INSTRUCTIONS, INJURIES TO PERSONS AND DAMAGE TO EQUIPMENT CAN OCCUR.

(3) Do this task: Close the Thrust Reverser (Selection), AMM TASK 78-31-00-010-804-F00.

——— END OF TASK ———

BOEING PROPRIETARY - Copyright © Unpublished Work - See title page for details

DATE	TAIL NUMBER	STATION	AIRLINE CARD NO.	BOEING CARD NO.
				72-300-02-01

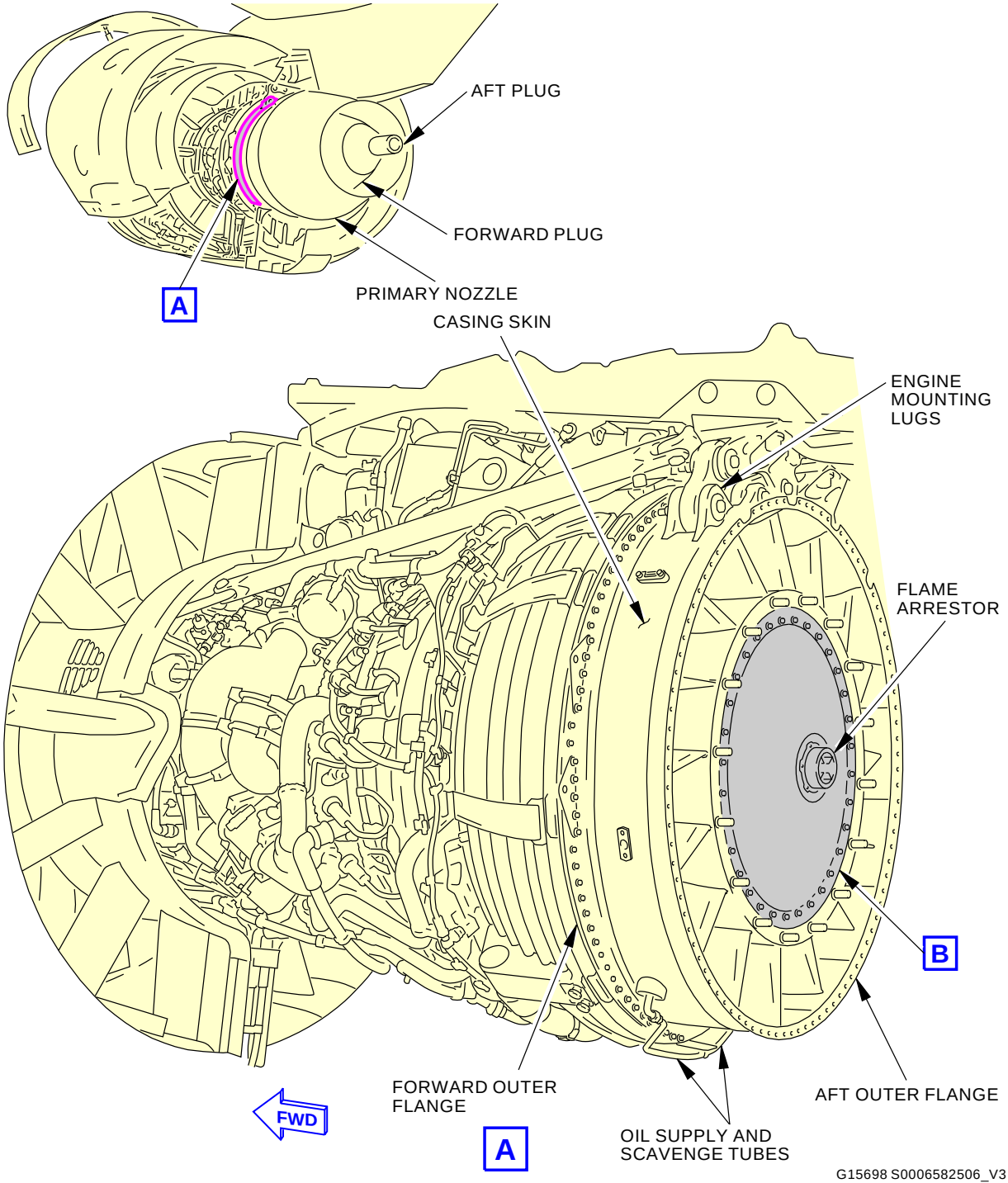

Turbine Frame Assembly Inspection
Figure 1 (Sheet 1 of 2)

BOEING PROPRIETARY - Copyright © Unpublished Work - See title page for details

DATE	TAIL NUMBER	STATION	AIRLINE CARD NO.	BOEING CARD NO.
				72-300-02-01

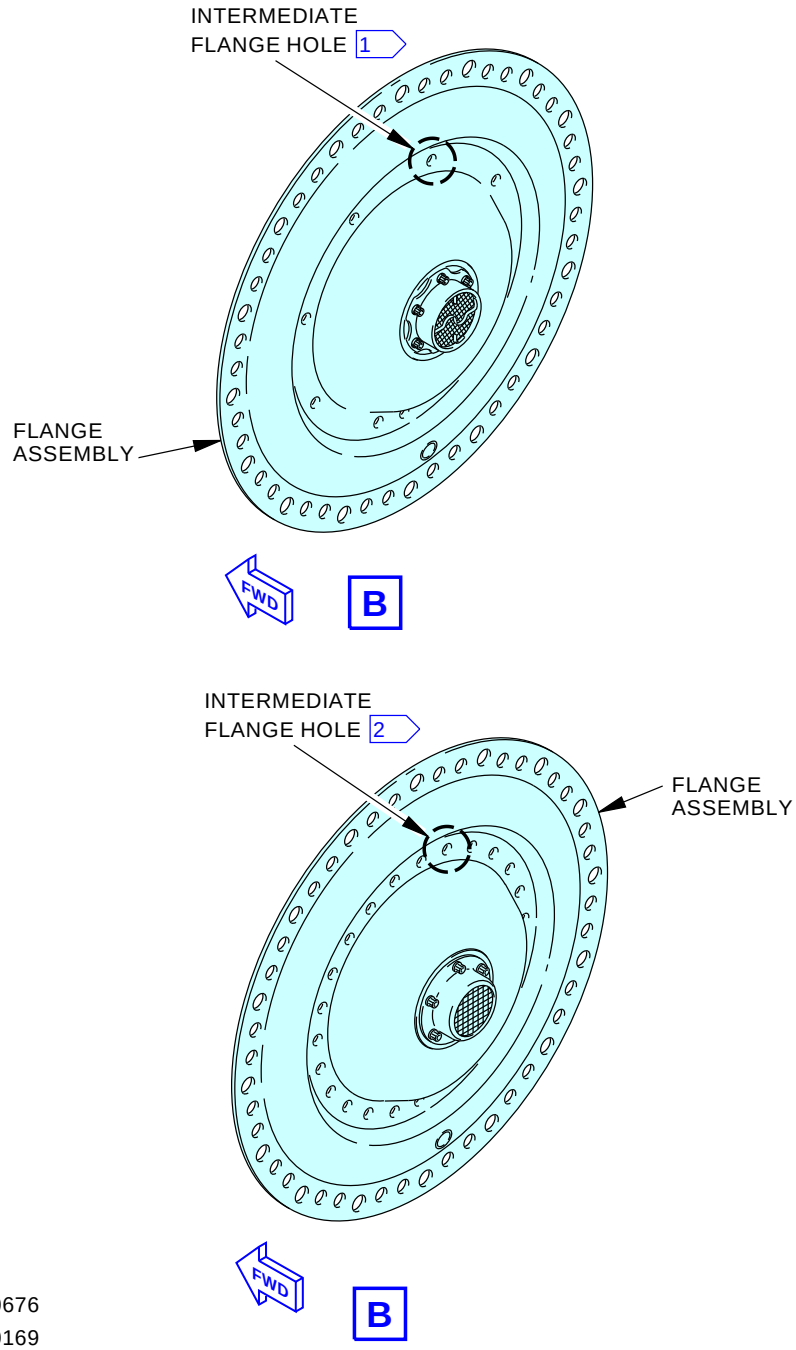

1 POST-SB 72-0676
2 POST-SB 72-0169

2203929 S0000491333_V2

Turbine Frame Assembly Inspection
Figure 1 (Sheet 2 of 2)

BOEING PROPRIETARY - Copyright © Unpublished Work - See title page for details

AIRLINE CARD NO		TITLE			BOEING CARD NO.
		LEFT ENGINE FWD SUMP, AFT SUMP, AGB/TGB MCD OR DMS DETECTORS AND SCAVENGE SCREENS			72-320-01-01
DATE	TASK INSPECTION - DETAILED				RELATED CARD
TAIL NUMBER	WORK AREA LEFT ENGINE	VERSION 1.1	THRESHOLD 500 FH	REPEAT 500 FH	APPLICABILITY AIRPLANE: ALL ENGINE: ALL
STATION	SKILL AIRPL				
		ACCESS 413BL			ZONE 411

Detailed inspection of the left engine fwd sump, aft sump, AGB/TGB magnetic chip detectors or debris monitoring system detectors and scavenge screens for particles.

A. References

Reference	Title
AMM 12-13-11-100-801	Flush The Engine Oil System (P/B 301)
AMM 71-00-00-800-806-F00	Engine Operation Limits (P/B 201)
AMM 71-00-00-800-807-F00	Start the Engine Procedure (Selection) (P/B 201)
AMM 71-00-02-000-801-F00	Power Plant Removal (P/B 401)
AMM 71-00-02-400-801-F00	Power Plant Installation (P/B 401)
AMM 71-11-02-010-801-F00	Open the Fan Cowl Panels (P/B 201)
AMM 71-11-02-410-801-F00	Close the Fan Cowl Panels (P/B 201)
AMM 72-55-00-200-801-F00	Low Pressure Turbine Shaft Assembly Inspection (P/B 601)
AMM 72-56-00-000-801-F00	Oil Supply Line Cleaning (P/B 701)
AMM 72-56-00-000-802-F00	Turbine Rear Frame (TRF) Oil Inlet Cover Removal (P/B 401)
AMM 72-56-00-100-802-F00	Oil Scavenge Line Cleaning (P/B 701)
AMM 72-56-00-200-801-F00	Turbine Frame Assembly Inspection (P/B 601)
AMM 72-56-00-300-801-F00	Oil Supply Tube Replacement (P/B 801)
AMM 72-60-00-000-802-F00	Sealol Seal Removal (P/B 201)
AMM 72-60-00-400-802-F00	Sealol Seal Installation (P/B 201)
AMM 72-62-00-000-801-F00	Transfer Gearbox Assembly Removal (P/B 401)
AMM 72-62-00-400-801-F00	Transfer Gearbox Assembly Installation (P/B 401)
AMM 72-63-00-000-804-F00	Accessory Gearbox Removal (P/B 401)
AMM 72-63-00-400-804-F00	Accessory Gearbox Installation (P/B 401)
AMM 73-21-08-000-801-F00	EEC Alternator and Alternator Rotor Removal (P/B 401)
AMM 73-21-08-400-801-F00	EEC Alternator and Alternator Rotor Installation (P/B 401)
AMM 79-00-00-200-806-F01	Aft Sump Oil System Inspection (P/B 601)
AMM 79-21-01-400-802-F00	Packing Replacement On The Inner Sealing Spool (Lubrication Unit Installed) (P/B 801)
AMM 79-21-01-400-804-F00	Packing Replacement On The Inner and Outer Sealing Spools (Lubrication Unit Installed) (P/B 801)
AMM 79-21-04-000-801-F00	Scavenge Oil Filter Assembly Removal (P/B 401)
AMM 79-21-04-400-801-F00	Scavenge Oil Filter Assembly Installation (P/B 401)

BOEING PROPRIETARY - Copyright © Unpublished Work - See title page for details

(Continued)

Reference	Title
AMM 79-21-05-000-806-F00	Magnetic Chip Detector (MCD) Removal (P/B 401)
AMM 79-21-05-400-804-F00	Magnetic Chip Detector (MCD) Installation (P/B 401)
AMM 79-21-06-000-801-F00	Scavenge Oil Filter Element Removal (P/B 401)
AMM 79-21-06-400-801-F00	Scavenge Oil Filter Element Installation (P/B 401)
AMM 80-11-01-200-801-F00	Starter Magnetic Plug Inspection (P/B 601)

B. Consumable Materials

Reference	Description	Specification
B00682 [CP2011]	Solvent - Stoddard	P-D-680 Type I, II or III
G00034	Cotton Wiper - Process Cleaning Absorbent Wiper (Cheesecloth, Gauze)	BMS15-5 Class A
G01659	Swab - Cotton Or Rayon, (Disposable)	

C. Tools/Equipment

NOTE: When more than one tool part number is listed under the same "Reference" number, the tools shown are alternates to each other within the same airplane series. Tool part numbers that are replaced or non-procurable are preceded by "Opt:", which stands for Optional.

Reference	Description
SPL-2450	Set - Print, Identification, Magnetic Chip Detector Debris Part #: 856A2683G01 Supplier: 58828 Opt Part #: 856A1364G02 Supplier: 58828
STD-1070	Lens - Magnifying, 10X, Hand Held
STD-1280	Source - Air, Regulated, Dry Filtered, 0-30 PSIG

BOEING PROPRIETARY - Copyright © Unpublished Work - See title page for details

TASK 79-00-00-200-804-F00

MECH	INSP

1. **Chip Detectors and Scavenge Screens Inspection**
(Figure 1, Figure 2, and Figure 3)

A. General

(1) This task provides the instructions on how to do the inspection of the chip detectors and the scavenge screens.

(2) For identification of a bearing failure and other failures of the oil system components, examine the chip detectors and scavenge screens.

(3) Accumulation, of a specific volume, of particles over a series of regularly scheduled chip detector inspections is not used as a method to identify any specific engine failure. However, based on initial chip detector findings, reduced interval chip detector inspections may be necessary to determine the amount, type and source of collected particles. Particle identification is based on visual or laboratory analysis. Corrective action is taken after you have identified the collected particles.

B. Prepare for the Inspection

SUBTASK 79-00-00-010-007-F00

(1) Do this task: Open the Fan Cowl Panels, AMM TASK 71-11-02-010-801-F00.

C. Chip Detectors and Scavenge Screens Inspection

SUBTASK 79-00-00-020-001-F00

CAUTION: REMOVE AND TAG ONE CHIP DETECTOR AT A TIME. THIS CAN PREVENT AN ERROR IN IDENTIFICATION OF THE SOURCE OF THE MATERIAL ON THE CHIP DETECTORS.

(1) Do this task: Magnetic Chip Detector (MCD) Removal, AMM TASK 79-21-05-000-806-F00.

NOTE: If no particles were found during inspection of the MCD or the DMS, refer to SUBTASK 79-00-00-420-001-F00 and SUBTASK 79-00-00-410-008-F00 at the end of this task.

(a) Place without dripping, the chip detector or scavenge screen with particles in a new polyethylene bag.

(b) Attach a tag to identify each chip detector location.

1) The tag identifies the plug location for each sump scavenge circuit (AGB/TGB Scavenge, Front FWD Sump Scavenge, AFT Sump Scavenge).

BOEING PROPRIETARY - Copyright © Unpublished Work - See title page for details

SUBTASK 79-00-00-020-002-F00

CAUTION: REMOVE THE SCREEN FROM THE CHIP DETECTOR TO EXAMINE THE CHIP DETECTOR MAGNET FOR THE PRESENCE OF PARTICLES. IF YOU DO NOT REMOVE THE SCREEN FROM THE CHIP DETECTOR, IT IS POSSIBLE THAT YOU WILL NOT BE ABLE TO SEE THE PARTICLES THAT ARE CAUGHT BY THE CHIP DETECTOR MAGNET.

CAUTION: CFM DOES NOT RECOMMEND THE USE OF ADHESIVE TAPE. HOWEVER, IF A PIECE OF ADHESIVE TAPE IS USED TO COLLECT THE PARTICLES, MAKE SURE THE ADHESIVE IS NOT TOO STRONG. IF THE ADHESIVE ON THE TAPE IS TOO STRONG, THE PARTICLES MAY BE DAMAGED WHEN THEY ARE REMOVED AND/OR IT WILL AFFECT THE LABORATORY ANALYSIS OF THE MATERIAL.

(2) If not already done, do these steps to remove the scavenge screen from the chip detector and clean the scavenge screen (Figure 1):

NOTE: Make sure you do not remove the particles from the chip detector magnet. Make sure you collect all the particles in the scavenge screen while you remove the scavenge screen from the chip detector.

(a) Place the chip detector on a clean surface, keep the plastic bag and identification tag.

(b) Push the spring-loaded pin that attaches the scavenge screen to the chip detector with a swab, G01659.

(c) Carefully remove the scavenge screen from the chip detector.

(d) Carefully remove and keep the particles from the scavenge screen.

WARNING: DO NOT GET THE SOLVENT IN YOUR MOUTH, EYES, OR ON YOUR SKIN. DO NOT BREATHE IN THE FUMES FROM THE SOLVENT. PUT ON PROTECTIVE SPLASH GOGGLES AND GLOVES WHEN YOU USE THE SOLVENT. KEEP THE SOLVENT AWAY FROM SPARKS, FLAME, AND HEAT. THE SOLVENT IS POISONOUS AND FLAMMABLE, WHICH CAN CAUSE INJURIES TO PERSONS AND DAMAGE TO EQUIPMENT.

(e) After you remove all the particles, clean the scavenge screen with solvent, B00682 [CP2011].

1) Dry the scavenge screen with a 0-30 psig dry filtered regulated air source, STD-1280.

2) Make sure that the scavenge screen is free of all particles.

SUBTASK 79-00-00-210-016-F00

(3) If you find particles or debris continue with the inspection.

(a) If the chip detector and scavenge screen are clean and free of debris no more action is necessary. Do this task: Magnetic Chip Detector (MCD) Installation, AMM TASK 79-21-05-400-804-F00.

BOEING PROPRIETARY - Copyright © Unpublished Work - See title page for details

DATE	TAIL NUMBER	STATION	AIRLINE CARD NO.	BOEING CARD NO.
				72-320-01-01

MECH	INSP

SUBTASK 79-00-00-170-001-F00

CAUTION: REMOVE THE SCREEN FROM THE CHIP DETECTOR TO EXAMINE THE CHIP DETECTOR MAGNET FOR THE PRESENCE OF PARTICLES. IF YOU DO NOT REMOVE THE SCREEN FROM THE CHIP DETECTOR, IT IS POSSIBLE THAT YOU WILL NOT BE ABLE TO SEE THE PARTICLES THAT ARE CAUGHT BY THE CHIP DETECTOR MAGNET.

CAUTION: DO NOT USE A MAGNET TO REMOVE THE PARTICLES FROM THE CHIP DETECTOR MAGNET. IF YOU USE A MAGNET, IT CAN DECREASE THE MAGNETIC PERFORMANCE OF THE CHIP DETECTOR.

CAUTION: CFM DOES NOT RECOMMEND THE USE OF ADHESIVE TAPE. HOWEVER, IF A PIECE OF ADHESIVE TAPE IS USED TO COLLECT THE PARTICLES, MAKE SURE THE ADHESIVE IS NOT TOO STRONG. IF THE ADHESIVE ON THE TAPE IS TOO STRONG, THE PARTICLES MAY BE DAMAGED WHEN THEY ARE REMOVED AND/OR IT WILL AFFECT THE LABORATORY ANALYSIS OF THE MATERIAL.

(4) Do these steps to remove the particles from the chip detector magnet and clean the chip detector (Figure 2):

(a) Carefully remove and keep the particles from the chip detector magnet with a cotton wiper, G00034 on a thin sheet of paper.

WARNING: DO NOT GET THE SOLVENT IN YOUR MOUTH, EYES, OR ON YOUR SKIN. DO NOT BREATHE IN THE FUMES FROM THE SOLVENT. PUT ON PROTECTIVE SPLASH GOGGLES AND GLOVES WHEN YOU USE THE SOLVENT. KEEP THE SOLVENT AWAY FROM SPARKS, FLAME, AND HEAT. THE SOLVENT IS POISONOUS AND FLAMMABLE, WHICH CAN CAUSE INJURIES TO PERSONS AND DAMAGE TO EQUIPMENT.

(b) After you remove all the particles, clean the chip detector magnet with solvent, B00682 [CP2011].

1) Dry the chip detector magnet with a 0-30 psig dry filtered regulated air source, STD-1280.

I **AKS ALL; ENGINES WITH MAGNETIC CHIP DETECTOR**

a) Make sure that the chip detector is free of all particles.

AKS ALL

2) Do this task: Magnetic Chip Detector (MCD) Installation, AMM TASK 79-21-05-400-804-F00.

SUBTASK 79-00-00-160-002-F00

(5) Prepare all particles collected from the chip detector and scavenge screen to examine them:

BOEING PROPRIETARY - Copyright © Unpublished Work - See title page for details

MECH	INSP

WARNING: DO NOT GET THE SOLVENT IN YOUR MOUTH, EYES, OR ON YOUR SKIN. DO NOT BREATHE IN THE FUMES FROM THE SOLVENT. PUT ON PROTECTIVE SPLASH GOGGLES AND GLOVES WHEN YOU USE THE SOLVENT. KEEP THE SOLVENT AWAY FROM SPARKS, FLAME, AND HEAT. THE SOLVENT IS POISONOUS AND FLAMMABLE, WHICH CAN CAUSE INJURIES TO PERSONS AND DAMAGE TO EQUIPMENT.

(a) Remove the oil from the particles that are not metallic with solvent, B00682 [CP2011].

(b) Use a magnet to isolate the metallic particles.

SUBTASK 79-00-00-212-001-F01

(6) Examine the particles from the chip detector and scavenge screen to identify the physical properties of the material (shape, size, quantity, magnetic properties, color) to be used in SUBTASK 79-00-00-240-001-F00.

NOTE: Accumulation, of a specific volume, of particles over a series of regularly scheduled chip detector inspections is not used as a method to identify any specific engine failure. However, based on initial chip detector findings, reduced interval chip detector inspections may be necessary to determine the amount, type and source of collected particles. Particle identification is based on visual or laboratory analysis. Corrective action is taken after you have identified the collected particles.

(a) Any quantity of material that is less than or equal to 0.004 inch (0.10 mm) in all dimension is satisfactory.

NOTE: Material that is greater than 0.004 inch (0.10 mm) in any dimension is not normal fuzz.

(b) Use a 10x hand held magnifying lens, STD-1070 and a magnetic bar to examine the magnetic particles from the chip detectors if more than 0.004 inch (0.10 mm) in any dimension:

1) Refer to CFM NDT manual Part 10 "CFMI-TP.NT.11" and/or set, SPL-2450, CD-ROM 856A2683G01 to identify possible source and/or refer to Figure 3 for examples of shapes that may be seen on a chip detector.

(c) Use a 10x hand held magnifying lens, STD-1070 to examine the non-magnetic particles from the chip detectors if more than 0.004 inch (0.10 mm) in any dimension:

1) Refer to CFM NDT manual Part 10 "CFMI-TP.NT.11" and/or set, SPL-2450, CD-ROM 856A2683G01 to identify possible source and/or refer to Figure 3 for examples of shapes that may be seen on a chip detector.

SUBTASK 79-00-00-240-001-F00

(7) If you have identified the collected particles, do these steps:

(a) If you find magnetic rectangular tang [approximate size 0.12 X 0.16 X 0.06 inch (3 X 4 X 1.5 mm)] from the AGB/TGB detector, it can be an AGB sealol seal anti-rotation tab. Do these steps:

1) Continue the engine in service provided that the oil consumption is in the limit (AMM TASK 71-00-00-800-806-F00).

BOEING PROPRIETARY - Copyright © Unpublished Work - See title page for details

MECH	INSP

2) If there is an AGB pad oil leakage, replace the affected sealol seal (AMM TASK 72-60-00-000-802-F00 and AMM TASK 72-60-00-400-802-F00).

(b) If you find magnetic material on the AGB/TGB scavenge screen or chip detector, examine the starter magnetic plug for contamination (AMM TASK 80-11-01-200-801-F00).

1) If the starter magnetic plug has contamination or if there was a recent starter failure, do these steps:

a) Replace the scavenge oil filter element (AMM TASK 79-21-06-000-801-F00 and AMM TASK 79-21-06-400-801-F00).

b) Re-examine the AGB/TGB chip detector each 10 to 20 cycles until the chip detector is found to be clean. Replace the scavenge oil filter element each time you find contamination on the AGB/TGB chip detector.

2) If you find that the material is not from the starter or from a recent starter removal, do these steps:

a) Do this task: EEC Alternator and Alternator Rotor Removal, AMM TASK 73-21-08-000-801-F00.

b) Do a visual check of EEC alternator and rotor and look for debris and obvious damage.

c) If damage or debris is found, do these steps:

<1> Remove the debris from the alternator pad area and clean as necessary.

<2> Install a new EEC alternator and rotor (AMM TASK 73-21-08-400-801-F00).

<3> Do this task: Flush The Engine Oil System, AMM TASK 12-13-11-100-801.

<4> Re-examine the AGB/TGB chip detector every 10 to 20 cycles until it is found to be clean. Replace the scavenge oil filter element each time you find contamination.

d) If no damage or debris is found, do this task: EEC Alternator and Alternator Rotor Installation, AMM TASK 73-21-08-400-801-F00.

e) If no damage or debris is found, and bearing material (M50 material from either the inner/outer race and/or rolling elements) has been identified on the AGB/TGB chip detector, do these steps:

NOTE: M50 material has the appearance as thin shiny bright laminated magnetic flakes.

<1> Replace the AGB (AMM TASK 72-63-00-000-804-F00 and AMM TASK 72-63-00-400-804-F00).

<2> Replace the TGB (AMM TASK 72-62-00-000-801-F00 and AMM TASK 72-62-00-400-801-F00).

(c) If you find non-magnetic flat piece with castellated portion in the AGB/TGB scavenge screen, it can be a key lock, AGB stud or insert. Do this step:

1) Continue the engine in service provided there is no other metallic debris.

BOEING PROPRIETARY - Copyright © Unpublished Work - See title page for details

DATE	TAIL NUMBER	STATION	AIRLINE CARD NO.	BOEING CARD NO.
				72-320-01-01

MECH	INSP

(d) If you find aluminum debris in the AGB/TGB sump scavenge screen, do these steps:

NOTE: Aluminum on the AGB/TGB scavenge screen can indicate either a failed alternator or AGB.

1) Do this task: EEC Alternator and Alternator Rotor Removal, AMM TASK 73-21-08-000-801-F00.

2) Do a visual check of the EEC alternator and rotor and the AGB pad, look for debris and obvious damage.

a) If there was no damage in the AGB, but debris was found, remove the debris from the alternator pad area and clean as necessary.

b) Install a new EEC alternator and rotor (AMM TASK 73-21-08-400-801-F00).

c) Do this task: Flush The Engine Oil System, AMM TASK 12-13-11-100-801.

d) Re-examine the AGB/TGB chip detector and the scavenge oil filter element every 10 to 20 cycles until they are found to be clean.

3) If the damage is in the AGB alternator pad, replace the AGB (AMM TASK 72-63-00-000-804-F00 and AMM TASK 72-63-00-400-804-F00).

4) If the checks of the EEC alternator, rotor and AGB alternator pad are satisfactory, do these steps for suspect AGB deterioration:

a) Clean or replace the scavenge oil filter (AMM TASK 79-21-04-000-801-F00 and AMM TASK 79-21-04-400-801-F00).

b) In 25 cycles or less, do one of these steps:

<1> Replace the engine (AMM TASK 71-00-02-000-801-F00 and AMM TASK 71-00-02-400-801-F00).

<2> Or replace the AGB (AMM TASK 72-63-00-000-804-F00 and AMM TASK 72-63-00-400-804-F00).

(e) If you find coke particles in some of the AGB/TGB, AFT and/or FWD screens, do these steps:

1) Replace the scavenge oil filter element (AMM TASK 79-21-06-000-801-F00 and AMM TASK 79-21-06-400-801-F00).

(f) If you find coke particles in the AGB/TGB screen only, do these steps:

1) Do this task: EEC Alternator and Alternator Rotor Removal, AMM TASK 73-21-08-000-801-F00.

2) Do a visual check of the EEC alternator and alternator rotor for coke particles.

a) If it is necessary, clean the coke particles.

3) Do this task: EEC Alternator and Alternator Rotor Installation, AMM TASK 73-21-08-400-801-F00.

BOEING PROPRIETARY - Copyright © Unpublished Work - See title page for details

DATE	TAIL NUMBER	STATION	AIRLINE CARD NO.	BOEING CARD NO. 72-320-01-01

MECH	INSP

(g) If you find bearing material (material from either the inner/outer race and/or rolling elements) on the Aft sump or Fwd sump scavenge screen or chip detector, replace the engine (AMM TASK 71-00-02-000-801-F00 and AMM TASK 71-00-02-400-801-F00).

NOTE: Material from the inner/outer race and/or rolling elements has the appearance as thin shiny bright laminated magnetic flakes. Refer to CFM NDT manual Part 10 "CFMI-TP.NT.11" and/or set, SPL-2450, CD-ROM 856A2683G01 to identify possible source.

(h) If you find plastic or organic material in the Fwd sump scavenge screen, do these steps:

NOTE: The plastic or organic material is an indication of a deterioration of the forward air/oil abradable seal or the forward air/oil separator ducts and can include one or more of these:

1) Glass fiber with polyamide material with grooves (reddish-brown color)

2) Phenolic or plastic material (greenish-white color)

3) Resin polyamide material (green or brown color).

1) Continue the engine in service provided that the oil consumption is in the limit (AMM TASK 71-00-00-800-806-F00).

(i) If you find one or more 0.25 inch (6.4 mm) hex base nuts in the Fwd Sump, replace the engine (AMM TASK 71-00-02-000-801-F00 and AMM TASK 71-00-02-400-801-F00).

NOTE: This nut came from the Inlet gearbox (IGB).

(j) If you find hastelloy X material that looks the same as honeycomb or AS7G06 material in the aft sump scavenge screen, it can be from the air/oil separator. Replace the engine (AMM TASK 71-00-02-000-801-F00 and AMM TASK 71-00-02-400-801-F00).

(k) If you find one of the following materials in the Aft Sump scavenge screen, continue the engine in service provided that the oil consumption is in the limit (AMM TASK 71-00-00-800-806-F00).

1) Non-magnetic, gray and granular debris - can be abradable material

2) Non-magnetic, silver sheath - can be air/oil seal coating material.

(l) If you find non-magnetic metallic hair-link debris in the Aft Sump scavenge screen, continue the engine in service provided that the oil consumption is in the limit (Engine Operation Limits, AMM TASK 71-00-00-800-806-F00).

NOTE: Silver filaments are expected during engine break-in from initial penetration of the center vent tube seal teeth into silver abradable on the oil inlet cover.

1) If the engine is less than 15000 flight hours since new, continue the engine in service provided that the oil consumption is in the limit (Engine Operation Limits, AMM TASK 71-00-00-800-806-F00).

2) If the engine is more than or equal to 15000 flight hours since new, continue the engine operation provided that the oil consumption is in the limit (Engine Operation Limits, AMM TASK 71-00-00-800-806-F00).

BOEING PROPRIETARY - Copyright © Unpublished Work - See title page for details

DATE	TAIL NUMBER	STATION	AIRLINE CARD NO.	BOEING CARD NO.
				72-320-01-01

MECH	INSP

a) Decrease the chip detector inspection interval at 50-75 flight hours. Return to usual inspection interval when the chip detector is found to be clean for three consecutive checks.

b) If you have repeated finding during the checks of the magnetic chip detector, remove the scavenge oil filter element and send it to laboratory for analysis (Scavenge Oil Filter Element Removal, AMM TASK 79-21-06-000-801-F00 and Scavenge Oil Filter Element Installation, AMM TASK 79-21-06-400-801-F00).

<1> If the Oil Filter analysis confirms more than 500 silver filaments or/and 500 flakes of 17-4PH and/or 500 flakes of Z12CNDV12, do the following inspections for evidence of rear center vent tube orbiting:

<a> Remove the oil inlet cover of the turbine rear frame (Turbine Rear Frame (TRF) Oil Inlet Cover Removal, AMM TASK 72-56-00-000-802-F00).

<b> Examine the abradable coating of the inlet cover (Turbine Frame Assembly Inspection, AMM TASK 72-56-00-200-801-F00).

<c> Examine the seal teeth of the center vent tube rear extension duct (Low Pressure Turbine Shaft Assembly Inspection, AMM TASK 72-55-00-200-801-F00).

<d> If the inspection is not satisfactory, this is an evidence of center vent tube orbiting. Engine must be removed for replacement of center vent tube in shop (Power Plant Removal, AMM TASK 71-00-02-000-801-F00 and Power Plant Installation, AMM TASK 71-00-02-400-801-F00).

NOTE: A service extension for 25 hours or 10 cycles (use the first limit to occur) is permitted before engine removal.

<2> If the oil filter analysis does not confirm more than 500 particles of silver and 17-4PH and Z12CNDV12, continue the decreased chip detector inspection interval at 50-75 hours. Return to usual inspection interval when the chip detector is found to be clean for three consecutive checks.

(m) If you find organic material from packings (O-rings), that has black broken pieces from any sump, do these steps:

1) Make sure that the oil pressure and the oil consumption are in the limits (AMM TASK 71-00-00-800-806-F00).

2) Examine the scavenge oil filter element for similar packing material (AMM TASK 79-21-06-000-801-F00).

BOEING PROPRIETARY - Copyright © Unpublished Work - See title page for details

MECH	INSP

CAUTION: THE OUTER SPOOL VALVE O-RING WILL BE CAPTURED IN THE SCAVENGE FILTER. THE INNER SPOOL VALVE O-RING WILL BE CAPTURED IN THE CHIP DETECTOR SCAVENGE SCREEN. IF EITHER OF THE ABOVE O-RINGS ARE MISSING OR DAMAGED, THE ENGINE OIL CAN LEAK OUT IF THE CHIP DETECTOR IS NOT INSTALLED CORRECTLY.

3) If black packing debris is found in the scavenge screen, it is probably from the inner and/or outer sealing spool valve on the lubrication unit. Do these steps.

a) Replace the packing for the inner and/or outer spool of the lubrication unit (AMM TASK 79-21-01-400-802-F00 and AMM TASK 79-21-01-400-804-F00).

b) If you do not replace these packings, a Continue-In-Service limit of 250 cycles is permitted with these conditions:

<1> All chip detectors are examined for correct installation [locked] by two different persons prior to the close of the fan cowls (AMM TASK 79-21-05-400-804-F00).

<2> Do the chip detector installation check again each time the fan cowls are opened.

4) Do the chip detector installation check (by two people) again anytime the chip detectors are removed and installed.

(n) If you find granular carbon material in the Aft Sump scavenge screen, it can be from a cracked scavenge line in the TRF or coke buildup in the aft sump oil system. Do these steps:

1) Do this task: Aft Sump Oil System Inspection, AMM TASK 79-00-00-200-806-F01.

2) If the engine oil pressure trend does not show a gradual increase, do these tasks at the next convenient opportunity.

a) Do this task: Oil Scavenge Line Cleaning, AMM TASK 72-56-00-100-802-F00.

b) Do this task: Oil Supply Line Cleaning, AMM TASK 72-56-00-000-801-F00 or Oil Supply Tube Replacement, AMM TASK 72-56-00-300-801-F00.

3) If the engine oil pressure trend shows a gradual increase, do these tasks in less than 25 cycles.

a) Do this task: Oil Scavenge Line Cleaning, AMM TASK 72-56-00-100-802-F00.

b) Do this task: Oil Supply Line Cleaning, AMM TASK 72-56-00-000-801-F00 or Oil Supply Tube Replacement, AMM TASK 72-56-00-300-801-F00.

4) Replace the scavenge oil filter element (AMM TASK 79-21-06-000-801-F00 and AMM TASK 79-21-06-400-801-F00).

5) Monitor the engine oil pressure during the next 20 to 50 hours of operation.

(o) If you find the materials that follow from any sump, continue the engine in service:

BOEING PROPRIETARY - Copyright © Unpublished Work - See title page for details

1) Machined chips that are shiny curls of metal or that have parallel marks from machine tools when you see them with a 10x hand held magnifying lens, STD-1070.

2) Rub strips from the labyrinth seal that are made of stainless steel that look like silver shavings.

(p) If you find pure silver flakes from any sump, not related with bearing material, continue the engine operation but decrease the chip detector inspection interval at 50-75 hours.

1) Return to usual inspection interval when the chip detector is found to be clean for three consecutive checks.

(q) If the material identified per the laboratory analysis was not identified in one of the above categories, continue the engine operation for one month but decrease the chip detector inspection interval at 50-75 hours.

1) Return to usual inspection interval when the chip detector is found to be clean for three consecutive checks.

SUBTASK 79-00-00-210-009-F00

(8) If you find magnetic particles that you cannot identify, do these steps:

(a) SATISFACTORY CONDITION - If you find less than four particles with the condition below, continue the engine in service.

1) The largest particle is more than 0.004 inch (0.10 mm) and less than 0.01 inch (0.25 mm) in any dimension.

(b) MARGINAL CONDITION - Do these steps for the limits, which are given below (Table 1):

Table 1

PARTICLES FOUND	LARGEST PARTICLE DIMENSION
4 or more	More than 0.004 inch (0.10 mm) and less than 0.01 inch (0.25 mm)
Less than 4	More than or equal to 0.01 inch (0.25 mm), But less than 0.02 inch (0.50 mm)

1) Send the particles to the laboratory for analysis.

2) Do the inspection of the chip detectors for particles after each flight until you get the analysis from the laboratory.

3) If you find magnetic particles during the post flight inspections that you cannot identify, limit the engine operation to 5 cycles or 25 hours which ever comes first.

4) After you get the analysis from the laboratory, then do the applicable corrective action for the type of material that you found as defined in SUBTASK 79-00-00-240-001-F00.

NOTE: For more information on particle analysis, refer to the CFMI Non-Destructive Test Manual, Part 9 and Part 10 or CD-ROM 856A2683G01.

BOEING PROPRIETARY - Copyright © Unpublished Work - See title page for details

(c) UNSATISFACTORY CONDITION - Do these steps for the limits, which are given below (Table 2):

Table 2

PARTICLES FOUND	LARGEST PARTICLE DIMENSION
Any amount	More than or equal to 0.02 inch (0.50 mm)
4 or more	More than or equal to 0.01 inch (0.25 mm), But less than 0.02 inch (0.50 mm)

1) Send the particles to the laboratory for analysis.

CAUTION: DO NOT INSTALL THE CHIP DETECTOR WITHOUT THE PACKING. INSTALLATION OF THE CHIP DETECTOR WITHOUT THE PACKING CAN CAUSE OIL LEAKAGE DURING ENGINE OPERATION AND A POSSIBLE ENGINE FAILURE.

2) Do this task: Magnetic Chip Detector (MCD) Installation, AMM TASK 79-21-05-400-804-F00.

3) Operate the engine at a minimum of 70 percent N1 for 10 minutes (AMM TASK 71-00-00-800-807-F00).

4) Do a check of the chip detectors where magnetic particles were identified.

a) If you do not find magnetic particles, do these steps:

<1> If you cannot get the analysis from the laboratory, do a check of the chip detectors after each flight until you get the analysis from the laboratory.

<2> If you find magnetic particles larger than 0.004 inch (0.10 mm) in any dimension during any chip detector inspection, do not operate the engine until the first sample of magnetic particles have been identified.

b) If you find magnetic particles larger than 0.004 inch (0.10 mm) in any dimension during any chip detector inspection, do not operate the engine until the first sample of magnetic particles have been identified.

5) After you get the analysis from the laboratory, then do the applicable corrective action for the type of material that you found as defined in SUBTASK 79-00-00-240-001-F00.

NOTE: For more information on particle analysis, refer to the CFMI Non-Destructive Test Manual, Part 9 and Part 10, or set, SPL-2450, CD-ROM 856A2683G01.

SUBTASK 79-00-00-210-010-F00

(9) If you find non-magnetic particles that you cannot identify in the Fwd or Aft Sump scavenge screen or in the AGB/TGB scavenge screen which are not aluminum-like, do these steps:

(a) SATISFACTORY CONDITION - If you find less than four particles with the condition below, continue the engine in service.

BOEING PROPRIETARY - Copyright © Unpublished Work - See title page for details

1) The largest particle is less than 0.4 inch (10 mm) in all dimensions.

(b) UNSATISFACTORY CONDITION - Do these steps for the limits, which are given below (Table 3):

Table 3

PARTICLES FOUND	LARGEST PARTICLE DIMENSION
Any amount	More than or equal to 0.4 inch (10 mm)
4 or more	Less than 0.4 inch (10 mm)

1) Send the particles to the laboratory for analysis.

CAUTION: DO NOT INSTALL THE CHIP DETECTOR WITHOUT A PACKING. INSTALLATION OF THE CHIP DETECTOR WITHOUT A PACKING CAN CAUSE OIL LEAKAGE DURING ENGINE OPERATION AND A POSSIBLE ENGINE FAILURE.

2) Do this task: Magnetic Chip Detector (MCD) Installation, AMM TASK 79-21-05-400-804-F00.

3) Operate the engine at a minimum of 70 percent N1 for 10 minutes (AMM TASK 71-00-00-800-807-F00).

4) Do a check of the scavenge screens where the particles were found.

a) If you do not find particles, continue the engine in operation until you get the analysis from the laboratory.

b) If you find particles which are less than 0.2 inch (5 mm), do these steps:

<1> Do a check of the scavenge screens after each flight until you get the analysis from the laboratory.

<2> If you find non-magnetic particles which are more than 0.4 inch (10 mm) during post flight chip detector inspections, limit the engine operation to 10 cycles.

c) If you find non-magnetic particles which are more than 0.2 inch (5 mm), limit the engine operation to 10 cycles.

<1> Do a post flight check of the chip detector and scavenge screens until you get the analysis from the laboratory.

5) After you get the analysis from the laboratory, then do the applicable corrective action for the type of material that you found as defined in SUBTASK 79-00-00-240-001-F00.

NOTE: For more information on particle analysis, refer to the CFMI Non-Destructive Test Manual, Part 9 and Part 10, or set, SPL-2450, CD-ROM 856A2683G01.

BOEING PROPRIETARY - Copyright © Unpublished Work - See title page for details

DATE	TAIL NUMBER	STATION	AIRLINE CARD NO.	BOEING CARD NO.
				72-320-01-01

MECH	INSP

SUBTASK 79-00-00-420-001-F00

CAUTION: DO NOT INSTALL THE CHIP DETECTOR WITHOUT A PACKING. INSTALLATION OF THE CHIP DETECTOR WITHOUT A PACKING CAN CAUSE OIL LEAKAGE DURING ENGINE OPERATION AND A POSSIBLE ENGINE FAILURE.

(10) If not already done, do this task: Magnetic Chip Detector (MCD) Installation, AMM TASK 79-21-05-400-804-F00.

SUBTASK 79-00-00-410-008-F00

(11) Do this task: Close the Fan Cowl Panels, AMM TASK 71-11-02-410-801-F00.

——— END OF TASK ———

BOEING PROPRIETARY - Copyright © Unpublished Work - See title page for details

DATE	TAIL NUMBER	STATION	AIRLINE CARD NO.	BOEING CARD NO.
				72-320-01-01

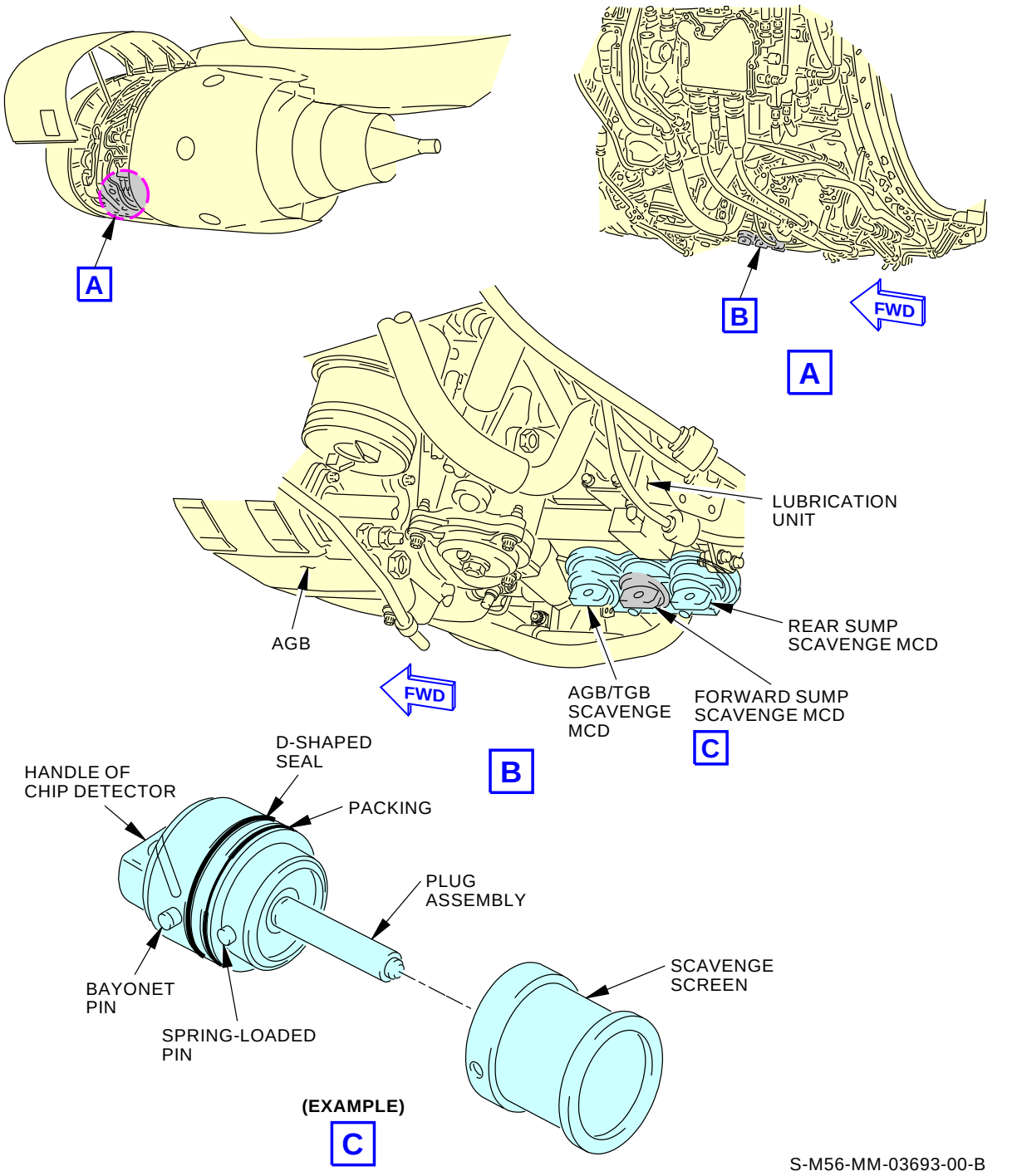

Scavenge Screen Inspection
Figure 1

BOEING PROPRIETARY - Copyright © Unpublished Work - See title page for details

DATE	TAIL NUMBER	STATION	AIRLINE CARD NO.	BOEING CARD NO.
				72-320-01-01

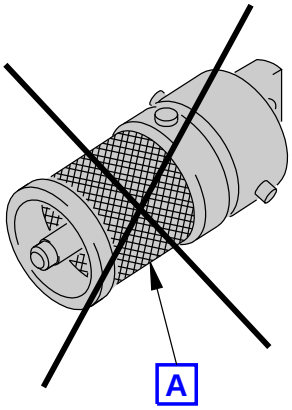

NOTE:DO NOT INSPECT WITH SCREEN INSTALLED.

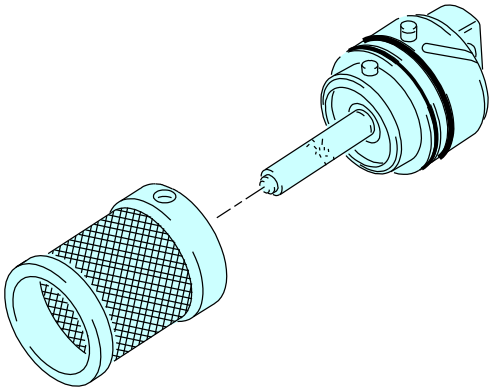

A

NOTE: REMOVE SCREEN TO CLOSELY INSPECT DETECTOR
CLEANING REQUIRED AFTER INSPECTION.

MM-00051-00-B

G22048 S0006583585_V2

Chip Detector Inspection
Figure 2

BOEING PROPRIETARY - Copyright © Unpublished Work - See title page for details

DATE	TAIL NUMBER	STATION	AIRLINE CARD NO.	BOEING CARD NO.
				72-320-01-01

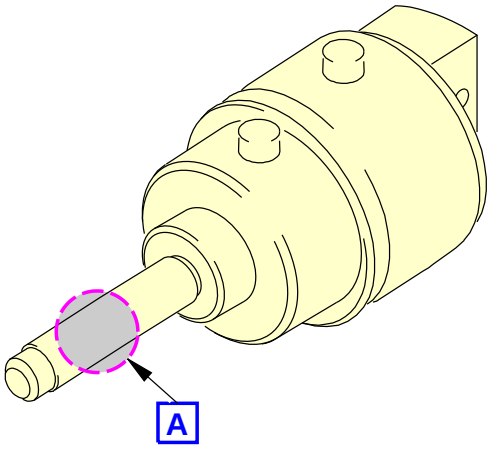

MAGNETIC CHIP DETECTOR

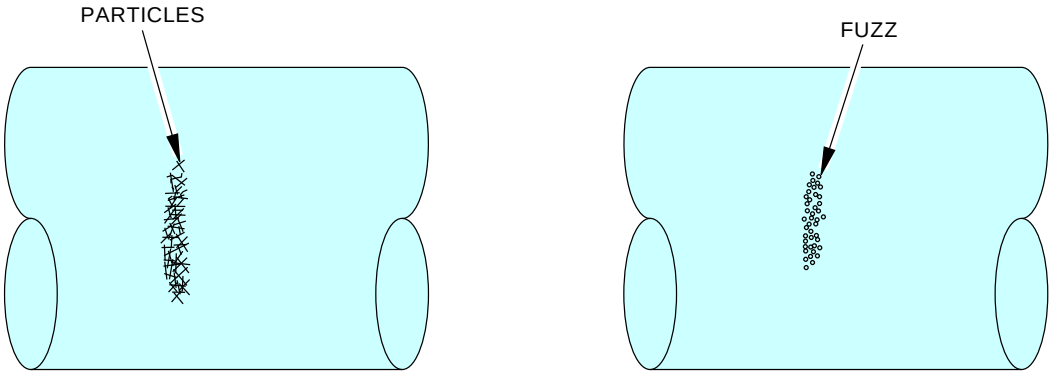

NORMAL

A

D66520 S0000161926_V2

Chip Detector Particles
Figure 3 (Sheet 1 of 2)

BOEING PROPRIETARY - Copyright © Unpublished Work - See title page for details

DATE	TAIL NUMBER	STATION	AIRLINE CARD NO.	BOEING CARD NO.
				72-320-01-01

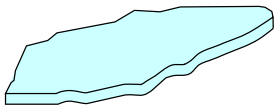

FLAKE

A

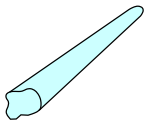

SLIVER

A

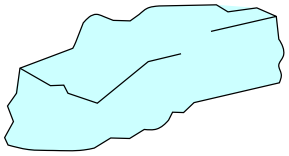

CHUNK

A

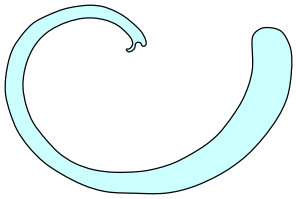

MACHINING CHIPS

A

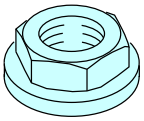

HEXAGONAL NUT 1/4 in.

A

D63060 S0000161929_V2

Chip Detector Particles
Figure 3 (Sheet 2 of 2)

BOEING PROPRIETARY - Copyright © Unpublished Work - See title page for details

AIRLINE CARD NO		TITLE			BOEING CARD NO.
		RIGHT ENGINE FWD SUMP, AFT SUMP, AGB/TGB MCD OR DMS DETECTORS AND SCAVENGE SCREENS			72-320-02-01
DATE	TASK INSPECTION - DETAILED				RELATED CARD
TAIL NUMBER	WORK AREA RIGHT ENGINE	VERSION 1.1	THRESHOLD 500 FH	REPEAT 500 FH	APPLICABILITY AIRPLANE: ALL ENGINE: ALL
STATION	SKILL AIRPL				
		ACCESS 423BL			ZONE 421

Detailed inspection of the right engine fwd sump, aft sump, AGB/TGB magnetic chip detectors or debris monitoring system detectors and scavenge screens for particles.

A. References

Reference	Title
AMM 12-13-11-100-801	Flush The Engine Oil System (P/B 301)
AMM 71-00-00-800-806-F00	Engine Operation Limits (P/B 201)
AMM 71-00-00-800-807-F00	Start the Engine Procedure (Selection) (P/B 201)
AMM 71-00-02-000-801-F00	Power Plant Removal (P/B 401)
AMM 71-00-02-400-801-F00	Power Plant Installation (P/B 401)
AMM 71-11-02-010-801-F00	Open the Fan Cowl Panels (P/B 201)
AMM 71-11-02-410-801-F00	Close the Fan Cowl Panels (P/B 201)
AMM 72-55-00-200-801-F00	Low Pressure Turbine Shaft Assembly Inspection (P/B 601)
AMM 72-56-00-000-801-F00	Oil Supply Line Cleaning (P/B 701)
AMM 72-56-00-000-802-F00	Turbine Rear Frame (TRF) Oil Inlet Cover Removal (P/B 401)
AMM 72-56-00-100-802-F00	Oil Scavenge Line Cleaning (P/B 701)
AMM 72-56-00-200-801-F00	Turbine Frame Assembly Inspection (P/B 601)
AMM 72-56-00-300-801-F00	Oil Supply Tube Replacement (P/B 801)
AMM 72-60-00-000-802-F00	Sealol Seal Removal (P/B 201)
AMM 72-60-00-400-802-F00	Sealol Seal Installation (P/B 201)
AMM 72-62-00-000-801-F00	Transfer Gearbox Assembly Removal (P/B 401)
AMM 72-62-00-400-801-F00	Transfer Gearbox Assembly Installation (P/B 401)
AMM 72-63-00-000-804-F00	Accessory Gearbox Removal (P/B 401)
AMM 72-63-00-400-804-F00	Accessory Gearbox Installation (P/B 401)
AMM 73-21-08-000-801-F00	EEC Alternator and Alternator Rotor Removal (P/B 401)
AMM 73-21-08-400-801-F00	EEC Alternator and Alternator Rotor Installation (P/B 401)
AMM 79-00-00-200-806-F01	Aft Sump Oil System Inspection (P/B 601)
AMM 79-21-01-400-802-F00	Packing Replacement On The Inner Sealing Spool (Lubrication Unit Installed) (P/B 801)
AMM 79-21-01-400-804-F00	Packing Replacement On The Inner and Outer Sealing Spools (Lubrication Unit Installed) (P/B 801)
AMM 79-21-04-000-801-F00	Scavenge Oil Filter Assembly Removal (P/B 401)
AMM 79-21-04-400-801-F00	Scavenge Oil Filter Assembly Installation (P/B 401)

BOEING PROPRIETARY - Copyright © Unpublished Work - See title page for details

(Continued)

Reference	Title
AMM 79-21-05-000-806-F00	Magnetic Chip Detector (MCD) Removal (P/B 401)
AMM 79-21-05-400-804-F00	Magnetic Chip Detector (MCD) Installation (P/B 401)
AMM 79-21-06-000-801-F00	Scavenge Oil Filter Element Removal (P/B 401)
AMM 79-21-06-400-801-F00	Scavenge Oil Filter Element Installation (P/B 401)
AMM 80-11-01-200-801-F00	Starter Magnetic Plug Inspection (P/B 601)

B. Consumable Materials

Reference	Description	Specification
B00682 [CP2011]	Solvent - Stoddard	P-D-680 Type I, II or III
G00034	Cotton Wiper - Process Cleaning Absorbent Wiper (Cheesecloth, Gauze)	BMS15-5 Class A
G01659	Swab - Cotton Or Rayon, (Disposable)	

C. Tools/Equipment

NOTE: When more than one tool part number is listed under the same "Reference" number, the tools shown are alternates to each other within the same airplane series. Tool part numbers that are replaced or non-procurable are preceded by "Opt:", which stands for Optional.

Reference	Description
SPL-2450	Set - Print, Identification, Magnetic Chip Detector Debris Part #: 856A2683G01 Supplier: 58828 Opt Part #: 856A1364G02 Supplier: 58828
STD-1070	Lens - Magnifying, 10X, Hand Held
STD-1280	Source - Air, Regulated, Dry Filtered, 0-30 PSIG

BOEING PROPRIETARY - Copyright © Unpublished Work - See title page for details

TASK 79-00-00-200-804-F00

1. Chip Detectors and Scavenge Screens Inspection

(Figure 1, Figure 2, and Figure 3)

A. General

(1) This task provides the instructions on how to do the inspection of the chip detectors and the scavenge screens.

(2) For identification of a bearing failure and other failures of the oil system components, examine the chip detectors and scavenge screens.

(3) Accumulation, of a specific volume, of particles over a series of regularly scheduled chip detector inspections is not used as a method to identify any specific engine failure. However, based on initial chip detector findings, reduced interval chip detector inspections may be necessary to determine the amount, type and source of collected particles. Particle identification is based on visual or laboratory analysis. Corrective action is taken after you have identified the collected particles.

B. Prepare for the Inspection

SUBTASK 79-00-00-010-007-F00

(1) Do this task: Open the Fan Cowl Panels, AMM TASK 71-11-02-010-801-F00.

C. Chip Detectors and Scavenge Screens Inspection

SUBTASK 79-00-00-020-001-F00

CAUTION: REMOVE AND TAG ONE CHIP DETECTOR AT A TIME. THIS CAN PREVENT AN ERROR IN IDENTIFICATION OF THE SOURCE OF THE MATERIAL ON THE CHIP DETECTORS.

(1) Do this task: Magnetic Chip Detector (MCD) Removal, AMM TASK 79-21-05-000-806-F00.

NOTE: If no particles were found during inspection of the MCD or the DMS, refer to SUBTASK 79-00-00-420-001-F00 and SUBTASK 79-00-00-410-008-F00 at the end of this task.

(a) Place without dripping, the chip detector or scavenge screen with particles in a new polyethylene bag.

(b) Attach a tag to identify each chip detector location.

1) The tag identifies the plug location for each sump scavenge circuit (AGB/TGB Scavenge, Front FWD Sump Scavenge, AFT Sump Scavenge).

BOEING PROPRIETARY - Copyright © Unpublished Work - See title page for details

SUBTASK 79-00-00-020-002-F00

CAUTION: REMOVE THE SCREEN FROM THE CHIP DETECTOR TO EXAMINE THE CHIP DETECTOR MAGNET FOR THE PRESENCE OF PARTICLES. IF YOU DO NOT REMOVE THE SCREEN FROM THE CHIP DETECTOR, IT IS POSSIBLE THAT YOU WILL NOT BE ABLE TO SEE THE PARTICLES THAT ARE CAUGHT BY THE CHIP DETECTOR MAGNET.

CAUTION: CFM DOES NOT RECOMMEND THE USE OF ADHESIVE TAPE. HOWEVER, IF A PIECE OF ADHESIVE TAPE IS USED TO COLLECT THE PARTICLES, MAKE SURE THE ADHESIVE IS NOT TOO STRONG. IF THE ADHESIVE ON THE TAPE IS TOO STRONG, THE PARTICLES MAY BE DAMAGED WHEN THEY ARE REMOVED AND/OR IT WILL AFFECT THE LABORATORY ANALYSIS OF THE MATERIAL.

(2) If not already done, do these steps to remove the scavenge screen from the chip detector and clean the scavenge screen (Figure 1):

NOTE: Make sure you do not remove the particles from the chip detector magnet. Make sure you collect all the particles in the scavenge screen while you remove the scavenge screen from the chip detector.

(a) Place the chip detector on a clean surface, keep the plastic bag and identification tag.

(b) Push the spring-loaded pin that attaches the scavenge screen to the chip detector with a swab, G01659.

(c) Carefully remove the scavenge screen from the chip detector.

(d) Carefully remove and keep the particles from the scavenge screen.

WARNING: DO NOT GET THE SOLVENT IN YOUR MOUTH, EYES, OR ON YOUR SKIN. DO NOT BREATHE IN THE FUMES FROM THE SOLVENT. PUT ON PROTECTIVE SPLASH GOGGLES AND GLOVES WHEN YOU USE THE SOLVENT. KEEP THE SOLVENT AWAY FROM SPARKS, FLAME, AND HEAT. THE SOLVENT IS POISONOUS AND FLAMMABLE, WHICH CAN CAUSE INJURIES TO PERSONS AND DAMAGE TO EQUIPMENT.

(e) After you remove all the particles, clean the scavenge screen with solvent, B00682 [CP2011].

1) Dry the scavenge screen with a 0-30 psig dry filtered regulated air source, STD-1280.

2) Make sure that the scavenge screen is free of all particles.

SUBTASK 79-00-00-210-016-F00

(3) If you find particles or debris continue with the inspection.

(a) If the chip detector and scavenge screen are clean and free of debris no more action is necessary. Do this task: Magnetic Chip Detector (MCD) Installation, AMM TASK 79-21-05-400-804-F00.

BOEING PROPRIETARY - Copyright © Unpublished Work - See title page for details

DATE	TAIL NUMBER	STATION	AIRLINE CARD NO.	BOEING CARD NO.
				72-320-02-01

MECH	INSP

SUBTASK 79-00-00-170-001-F00

CAUTION: REMOVE THE SCREEN FROM THE CHIP DETECTOR TO EXAMINE THE CHIP DETECTOR MAGNET FOR THE PRESENCE OF PARTICLES. IF YOU DO NOT REMOVE THE SCREEN FROM THE CHIP DETECTOR, IT IS POSSIBLE THAT YOU WILL NOT BE ABLE TO SEE THE PARTICLES THAT ARE CAUGHT BY THE CHIP DETECTOR MAGNET.

CAUTION: DO NOT USE A MAGNET TO REMOVE THE PARTICLES FROM THE CHIP DETECTOR MAGNET. IF YOU USE A MAGNET, IT CAN DECREASE THE MAGNETIC PERFORMANCE OF THE CHIP DETECTOR.

CAUTION: CFM DOES NOT RECOMMEND THE USE OF ADHESIVE TAPE. HOWEVER, IF A PIECE OF ADHESIVE TAPE IS USED TO COLLECT THE PARTICLES, MAKE SURE THE ADHESIVE IS NOT TOO STRONG. IF THE ADHESIVE ON THE TAPE IS TOO STRONG, THE PARTICLES MAY BE DAMAGED WHEN THEY ARE REMOVED AND/OR IT WILL AFFECT THE LABORATORY ANALYSIS OF THE MATERIAL.

(4) Do these steps to remove the particles from the chip detector magnet and clean the chip detector (Figure 2):

(a) Carefully remove and keep the particles from the chip detector magnet with a cotton wiper, G00034 on a thin sheet of paper.

WARNING: DO NOT GET THE SOLVENT IN YOUR MOUTH, EYES, OR ON YOUR SKIN. DO NOT BREATHE IN THE FUMES FROM THE SOLVENT. PUT ON PROTECTIVE SPLASH GOGGLES AND GLOVES WHEN YOU USE THE SOLVENT. KEEP THE SOLVENT AWAY FROM SPARKS, FLAME, AND HEAT. THE SOLVENT IS POISONOUS AND FLAMMABLE, WHICH CAN CAUSE INJURIES TO PERSONS AND DAMAGE TO EQUIPMENT.

(b) After you remove all the particles, clean the chip detector magnet with solvent, B00682 [CP2011].

1) Dry the chip detector magnet with a 0-30 psig dry filtered regulated air source, STD-1280.

I **AKS ALL; ENGINES WITH MAGNETIC CHIP DETECTOR**

a) Make sure that the chip detector is free of all particles.

AKS ALL

2) Do this task: Magnetic Chip Detector (MCD) Installation, AMM TASK 79-21-05-400-804-F00.

SUBTASK 79-00-00-160-002-F00

(5) Prepare all particles collected from the chip detector and scavenge screen to examine them:

BOEING PROPRIETARY - Copyright © Unpublished Work - See title page for details

MECH	INSP

WARNING: DO NOT GET THE SOLVENT IN YOUR MOUTH, EYES, OR ON YOUR SKIN. DO NOT BREATHE IN THE FUMES FROM THE SOLVENT. PUT ON PROTECTIVE SPLASH GOGGLES AND GLOVES WHEN YOU USE THE SOLVENT. KEEP THE SOLVENT AWAY FROM SPARKS, FLAME, AND HEAT. THE SOLVENT IS POISONOUS AND FLAMMABLE, WHICH CAN CAUSE INJURIES TO PERSONS AND DAMAGE TO EQUIPMENT.

(a) Remove the oil from the particles that are not metallic with solvent, B00682 [CP2011].

(b) Use a magnet to isolate the metallic particles.

SUBTASK 79-00-00-212-001-F01

(6) Examine the particles from the chip detector and scavenge screen to identify the physical properties of the material (shape, size, quantity, magnetic properties, color) to be used in SUBTASK 79-00-00-240-001-F00.

NOTE: Accumulation, of a specific volume, of particles over a series of regularly scheduled chip detector inspections is not used as a method to identify any specific engine failure. However, based on initial chip detector findings, reduced interval chip detector inspections may be necessary to determine the amount, type and source of collected particles. Particle identification is based on visual or laboratory analysis. Corrective action is taken after you have identified the collected particles.

(a) Any quantity of material that is less than or equal to 0.004 inch (0.10 mm) in all dimension is satisfactory.

NOTE: Material that is greater than 0.004 inch (0.10 mm) in any dimension is not normal fuzz.

(b) Use a 10x hand held magnifying lens, STD-1070 and a magnetic bar to examine the magnetic particles from the chip detectors if more than 0.004 inch (0.10 mm) in any dimension:

1) Refer to CFM NDT manual Part 10 "CFMI-TP.NT.11" and/or set, SPL-2450, CD-ROM 856A2683G01 to identify possible source and/or refer to Figure 3 for examples of shapes that may be seen on a chip detector.

(c) Use a 10x hand held magnifying lens, STD-1070 to examine the non-magnetic particles from the chip detectors if more than 0.004 inch (0.10 mm) in any dimension:

1) Refer to CFM NDT manual Part 10 "CFMI-TP.NT.11" and/or set, SPL-2450, CD-ROM 856A2683G01 to identify possible source and/or refer to Figure 3 for examples of shapes that may be seen on a chip detector.

SUBTASK 79-00-00-240-001-F00

(7) If you have identified the collected particles, do these steps:

(a) If you find magnetic rectangular tang [approximate size 0.12 X 0.16 X 0.06 inch (3 X 4 X 1.5 mm)] from the AGB/TGB detector, it can be an AGB sealol seal anti-rotation tab. Do these steps:

1) Continue the engine in service provided that the oil consumption is in the limit (AMM TASK 71-00-00-800-806-F00).

BOEING PROPRIETARY - Copyright © Unpublished Work - See title page for details

MECH	INSP

2) If there is an AGB pad oil leakage, replace the affected sealol seal (AMM TASK 72-60-00-000-802-F00 and AMM TASK 72-60-00-400-802-F00).

(b) If you find magnetic material on the AGB/TGB scavenge screen or chip detector, examine the starter magnetic plug for contamination (AMM TASK 80-11-01-200-801-F00).

1) If the starter magnetic plug has contamination or if there was a recent starter failure, do these steps:

a) Replace the scavenge oil filter element (AMM TASK 79-21-06-000-801-F00 and AMM TASK 79-21-06-400-801-F00).

b) Re-examine the AGB/TGB chip detector each 10 to 20 cycles until the chip detector is found to be clean. Replace the scavenge oil filter element each time you find contamination on the AGB/TGB chip detector.

2) If you find that the material is not from the starter or from a recent starter removal, do these steps:

a) Do this task: EEC Alternator and Alternator Rotor Removal, AMM TASK 73-21-08-000-801-F00.

b) Do a visual check of EEC alternator and rotor and look for debris and obvious damage.

c) If damage or debris is found, do these steps:

<1> Remove the debris from the alternator pad area and clean as necessary.

<2> Install a new EEC alternator and rotor (AMM TASK 73-21-08-400-801-F00).

<3> Do this task: Flush The Engine Oil System, AMM TASK 12-13-11-100-801.

<4> Re-examine the AGB/TGB chip detector every 10 to 20 cycles until it is found to be clean. Replace the scavenge oil filter element each time you find contamination.

d) If no damage or debris is found, do this task: EEC Alternator and Alternator Rotor Installation, AMM TASK 73-21-08-400-801-F00.

e) If no damage or debris is found, and bearing material (M50 material from either the inner/outer race and/or rolling elements) has been identified on the AGB/TGB chip detector, do these steps:

NOTE: M50 material has the appearance as thin shiny bright laminated magnetic flakes.

<1> Replace the AGB (AMM TASK 72-63-00-000-804-F00 and AMM TASK 72-63-00-400-804-F00).

<2> Replace the TGB (AMM TASK 72-62-00-000-801-F00 and AMM TASK 72-62-00-400-801-F00).

(c) If you find non-magnetic flat piece with castellated portion in the AGB/TGB scavenge screen, it can be a key lock, AGB stud or insert. Do this step:

1) Continue the engine in service provided there is no other metallic debris.

BOEING PROPRIETARY - Copyright © Unpublished Work - See title page for details

DATE	TAIL NUMBER	STATION	AIRLINE CARD NO.	BOEING CARD NO.
				72-320-02-01

MECH	INSP

(d) If you find aluminum debris in the AGB/TGB sump scavenge screen, do these steps:

NOTE: Aluminum on the AGB/TGB scavenge screen can indicate either a failed alternator or AGB.

1) Do this task: EEC Alternator and Alternator Rotor Removal, AMM TASK 73-21-08-000-801-F00.

2) Do a visual check of the EEC alternator and rotor and the AGB pad, look for debris and obvious damage.

a) If there was no damage in the AGB, but debris was found, remove the debris from the alternator pad area and clean as necessary.

b) Install a new EEC alternator and rotor (AMM TASK 73-21-08-400-801-F00).

c) Do this task: Flush The Engine Oil System, AMM TASK 12-13-11-100-801.

d) Re-examine the AGB/TGB chip detector and the scavenge oil filter element every 10 to 20 cycles until they are found to be clean.

3) If the damage is in the AGB alternator pad, replace the AGB (AMM TASK 72-63-00-000-804-F00 and AMM TASK 72-63-00-400-804-F00).

4) If the checks of the EEC alternator, rotor and AGB alternator pad are satisfactory, do these steps for suspect AGB deterioration:

a) Clean or replace the scavenge oil filter (AMM TASK 79-21-04-000-801-F00 and AMM TASK 79-21-04-400-801-F00).

b) In 25 cycles or less, do one of these steps:

<1> Replace the engine (AMM TASK 71-00-02-000-801-F00 and AMM TASK 71-00-02-400-801-F00).

<2> Or replace the AGB (AMM TASK 72-63-00-000-804-F00 and AMM TASK 72-63-00-400-804-F00).

(e) If you find coke particles in some of the AGB/TGB, AFT and/or FWD screens, do these steps:

1) Replace the scavenge oil filter element (AMM TASK 79-21-06-000-801-F00 and AMM TASK 79-21-06-400-801-F00).

(f) If you find coke particles in the AGB/TGB screen only, do these steps:

1) Do this task: EEC Alternator and Alternator Rotor Removal, AMM TASK 73-21-08-000-801-F00.

2) Do a visual check of the EEC alternator and alternator rotor for coke particles.

a) If it is necessary, clean the coke particles.

3) Do this task: EEC Alternator and Alternator Rotor Installation, AMM TASK 73-21-08-400-801-F00.

BOEING PROPRIETARY - Copyright © Unpublished Work - See title page for details

DATE	TAIL NUMBER	STATION	AIRLINE CARD NO.	BOEING CARD NO. 72-320-02-01

MECH	INSP

(g) If you find bearing material (material from either the inner/outer race and/or rolling elements) on the Aft sump or Fwd sump scavenge screen or chip detector, replace the engine (AMM TASK 71-00-02-000-801-F00 and AMM TASK 71-00-02-400-801-F00).

NOTE: Material from the inner/outer race and/or rolling elements has the appearance as thin shiny bright laminated magnetic flakes. Refer to CFM NDT manual Part 10 "CFMI-TP.NT.11" and/or set, SPL-2450, CD-ROM 856A2683G01 to identify possible source.

(h) If you find plastic or organic material in the Fwd sump scavenge screen, do these steps:

NOTE: The plastic or organic material is an indication of a deterioration of the forward air/oil abradable seal or the forward air/oil separator ducts and can include one or more of these:

1) Glass fiber with polyamide material with grooves (reddish-brown color)

2) Phenolic or plastic material (greenish-white color)

3) Resin polyamide material (green or brown color).

1) Continue the engine in service provided that the oil consumption is in the limit (AMM TASK 71-00-00-800-806-F00).

(i) If you find one or more 0.25 inch (6.4 mm) hex base nuts in the Fwd Sump, replace the engine (AMM TASK 71-00-02-000-801-F00 and AMM TASK 71-00-02-400-801-F00).

NOTE: This nut came from the Inlet gearbox (IGB).

(j) If you find hastelloy X material that looks the same as honeycomb or AS7G06 material in the aft sump scavenge screen, it can be from the air/oil separator. Replace the engine (AMM TASK 71-00-02-000-801-F00 and AMM TASK 71-00-02-400-801-F00).

(k) If you find one of the following materials in the Aft Sump scavenge screen, continue the engine in service provided that the oil consumption is in the limit (AMM TASK 71-00-00-800-806-F00).

1) Non-magnetic, gray and granular debris - can be abradable material

2) Non-magnetic, silver sheath - can be air/oil seal coating material.

(l) If you find non-magnetic metallic hair-link debris in the Aft Sump scavenge screen, continue the engine in service provided that the oil consumption is in the limit (Engine Operation Limits, AMM TASK 71-00-00-800-806-F00).

NOTE: Silver filaments are expected during engine break-in from initial penetration of the center vent tube seal teeth into silver abradable on the oil inlet cover.

1) If the engine is less than 15000 flight hours since new, continue the engine in service provided that the oil consumption is in the limit (Engine Operation Limits, AMM TASK 71-00-00-800-806-F00).

2) If the engine is more than or equal to 15000 flight hours since new, continue the engine operation provided that the oil consumption is in the limit (Engine Operation Limits, AMM TASK 71-00-00-800-806-F00).

BOEING PROPRIETARY - Copyright © Unpublished Work - See title page for details

DATE	TAIL NUMBER	STATION	AIRLINE CARD NO.	BOEING CARD NO.
				72-320-02-01

MECH	INSP

a) Decrease the chip detector inspection interval at 50-75 flight hours. Return to usual inspection interval when the chip detector is found to be clean for three consecutive checks.

b) If you have repeated finding during the checks of the magnetic chip detector, remove the scavenge oil filter element and send it to laboratory for analysis (Scavenge Oil Filter Element Removal, AMM TASK 79-21-06-000-801-F00 and Scavenge Oil Filter Element Installation, AMM TASK 79-21-06-400-801-F00).

<1> If the Oil Filter analysis confirms more than 500 silver filaments or/and 500 flakes of 17-4PH and/or 500 flakes of Z12CNDV12, do the following inspections for evidence of rear center vent tube orbiting:

<a> Remove the oil inlet cover of the turbine rear frame (Turbine Rear Frame (TRF) Oil Inlet Cover Removal, AMM TASK 72-56-00-000-802-F00).

<b> Examine the abradable coating of the inlet cover (Turbine Frame Assembly Inspection, AMM TASK 72-56-00-200-801-F00).

<c> Examine the seal teeth of the center vent tube rear extension duct (Low Pressure Turbine Shaft Assembly Inspection, AMM TASK 72-55-00-200-801-F00).

<d> If the inspection is not satisfactory, this is an evidence of center vent tube orbiting. Engine must be removed for replacement of center vent tube in shop (Power Plant Removal, AMM TASK 71-00-02-000-801-F00 and Power Plant Installation, AMM TASK 71-00-02-400-801-F00).

NOTE: A service extension for 25 hours or 10 cycles (use the first limit to occur) is permitted before engine removal.

<2> If the oil filter analysis does not confirm more than 500 particles of silver and 17-4PH and Z12CNDV12, continue the decreased chip detector inspection interval at 50-75 hours. Return to usual inspection interval when the chip detector is found to be clean for three consecutive checks.

(m) If you find organic material from packings (O-rings), that has black broken pieces from any sump, do these steps:

1) Make sure that the oil pressure and the oil consumption are in the limits (AMM TASK 71-00-00-800-806-F00).

2) Examine the scavenge oil filter element for similar packing material (AMM TASK 79-21-06-000-801-F00).

BOEING PROPRIETARY - Copyright © Unpublished Work - See title page for details

MECH	INSP

CAUTION: THE OUTER SPOOL VALVE O-RING WILL BE CAPTURED IN THE SCAVENGE FILTER. THE INNER SPOOL VALVE O-RING WILL BE CAPTURED IN THE CHIP DETECTOR SCAVENGE SCREEN. IF EITHER OF THE ABOVE O-RINGS ARE MISSING OR DAMAGED, THE ENGINE OIL CAN LEAK OUT IF THE CHIP DETECTOR IS NOT INSTALLED CORRECTLY.

3) If black packing debris is found in the scavenge screen, it is probably from the inner and/or outer sealing spool valve on the lubrication unit. Do these steps.

a) Replace the packing for the inner and/or outer spool of the lubrication unit (AMM TASK 79-21-01-400-802-F00 and AMM TASK 79-21-01-400-804-F00).

b) If you do not replace these packings, a Continue-In-Service limit of 250 cycles is permitted with these conditions:

<1> All chip detectors are examined for correct installation [locked] by two different persons prior to the close of the fan cowls (AMM TASK 79-21-05-400-804-F00).

<2> Do the chip detector installation check again each time the fan cowls are opened.

4) Do the chip detector installation check (by two people) again anytime the chip detectors are removed and installed.

(n) If you find granular carbon material in the Aft Sump scavenge screen, it can be from a cracked scavenge line in the TRF or coke buildup in the aft sump oil system. Do these steps:

1) Do this task: Aft Sump Oil System Inspection, AMM TASK 79-00-00-200-806-F01.

2) If the engine oil pressure trend does not show a gradual increase, do these tasks at the next convenient opportunity.

a) Do this task: Oil Scavenge Line Cleaning, AMM TASK 72-56-00-100-802-F00.

b) Do this task: Oil Supply Line Cleaning, AMM TASK 72-56-00-000-801-F00 or Oil Supply Tube Replacement, AMM TASK 72-56-00-300-801-F00.

3) If the engine oil pressure trend shows a gradual increase, do these tasks in less than 25 cycles.

a) Do this task: Oil Scavenge Line Cleaning, AMM TASK 72-56-00-100-802-F00.

b) Do this task: Oil Supply Line Cleaning, AMM TASK 72-56-00-000-801-F00 or Oil Supply Tube Replacement, AMM TASK 72-56-00-300-801-F00.

4) Replace the scavenge oil filter element (AMM TASK 79-21-06-000-801-F00 and AMM TASK 79-21-06-400-801-F00).

5) Monitor the engine oil pressure during the next 20 to 50 hours of operation.

(o) If you find the materials that follow from any sump, continue the engine in service:

BOEING PROPRIETARY - Copyright © Unpublished Work - See title page for details

1) Machined chips that are shiny curls of metal or that have parallel marks from machine tools when you see them with a 10x hand held magnifying lens, STD-1070.

2) Rub strips from the labyrinth seal that are made of stainless steel that look like silver shavings.

(p) If you find pure silver flakes from any sump, not related with bearing material, continue the engine operation but decrease the chip detector inspection interval at 50-75 hours.

1) Return to usual inspection interval when the chip detector is found to be clean for three consecutive checks.

(q) If the material identified per the laboratory analysis was not identified in one of the above categories, continue the engine operation for one month but decrease the chip detector inspection interval at 50-75 hours.

1) Return to usual inspection interval when the chip detector is found to be clean for three consecutive checks.

SUBTASK 79-00-00-210-009-F00

(8) If you find magnetic particles that you cannot identify, do these steps:

(a) SATISFACTORY CONDITION - If you find less than four particles with the condition below, continue the engine in service.

1) The largest particle is more than 0.004 inch (0.10 mm) and less than 0.01 inch (0.25 mm) in any dimension.

(b) MARGINAL CONDITION - Do these steps for the limits, which are given below (Table 1):

Table 1

PARTICLES FOUND	LARGEST PARTICLE DIMENSION
4 or more	More than 0.004 inch (0.10 mm) and less than 0.01 inch (0.25 mm)
Less than 4	More than or equal to 0.01 inch (0.25 mm), But less than 0.02 inch (0.50 mm)

1) Send the particles to the laboratory for analysis.

2) Do the inspection of the chip detectors for particles after each flight until you get the analysis from the laboratory.

3) If you find magnetic particles during the post flight inspections that you cannot identify, limit the engine operation to 5 cycles or 25 hours which ever comes first.

4) After you get the analysis from the laboratory, then do the applicable corrective action for the type of material that you found as defined in SUBTASK 79-00-00-240-001-F00.

NOTE: For more information on particle analysis, refer to the CFMI Non-Destructive Test Manual, Part 9 and Part 10 or CD-ROM 856A2683G01.

BOEING PROPRIETARY - Copyright © Unpublished Work - See title page for details

(c) UNSATISFACTORY CONDITION - Do these steps for the limits, which are given below (Table 2):

Table 2

PARTICLES FOUND	LARGEST PARTICLE DIMENSION
Any amount	More than or equal to 0.02 inch (0.50 mm)
4 or more	More than or equal to 0.01 inch (0.25 mm), But less than 0.02 inch (0.50 mm)

1) Send the particles to the laboratory for analysis.

CAUTION: DO NOT INSTALL THE CHIP DETECTOR WITHOUT THE PACKING. INSTALLATION OF THE CHIP DETECTOR WITHOUT THE PACKING CAN CAUSE OIL LEAKAGE DURING ENGINE OPERATION AND A POSSIBLE ENGINE FAILURE.

2) Do this task: Magnetic Chip Detector (MCD) Installation, AMM TASK 79-21-05-400-804-F00.

3) Operate the engine at a minimum of 70 percent N1 for 10 minutes (AMM TASK 71-00-00-800-807-F00).

4) Do a check of the chip detectors where magnetic particles were identified.

a) If you do not find magnetic particles, do these steps:

<1> If you cannot get the analysis from the laboratory, do a check of the chip detectors after each flight until you get the analysis from the laboratory.

<2> If you find magnetic particles larger than 0.004 inch (0.10 mm) in any dimension during any chip detector inspection, do not operate the engine until the first sample of magnetic particles have been identified.

b) If you find magnetic particles larger than 0.004 inch (0.10 mm) in any dimension during any chip detector inspection, do not operate the engine until the first sample of magnetic particles have been identified.

5) After you get the analysis from the laboratory, then do the applicable corrective action for the type of material that you found as defined in SUBTASK 79-00-00-240-001-F00.

NOTE: For more information on particle analysis, refer to the CFMI Non-Destructive Test Manual, Part 9 and Part 10, or set, SPL-2450, CD-ROM 856A2683G01.

SUBTASK 79-00-00-210-010-F00

(9) If you find non-magnetic particles that you cannot identify in the Fwd or Aft Sump scavenge screen or in the AGB/TGB scavenge screen which are not aluminum-like, do these steps:

(a) SATISFACTORY CONDITION - If you find less than four particles with the condition below, continue the engine in service.

BOEING PROPRIETARY - Copyright © Unpublished Work - See title page for details

1) The largest particle is less than 0.4 inch (10 mm) in all dimensions.

(b) UNSATISFACTORY CONDITION - Do these steps for the limits, which are given below (Table 3):

Table 3

PARTICLES FOUND	LARGEST PARTICLE DIMENSION
Any amount	More than or equal to 0.4 inch (10 mm)
4 or more	Less than 0.4 inch (10 mm)

1) Send the particles to the laboratory for analysis.

CAUTION: DO NOT INSTALL THE CHIP DETECTOR WITHOUT A PACKING. INSTALLATION OF THE CHIP DETECTOR WITHOUT A PACKING CAN CAUSE OIL LEAKAGE DURING ENGINE OPERATION AND A POSSIBLE ENGINE FAILURE.

2) Do this task: Magnetic Chip Detector (MCD) Installation, AMM TASK 79-21-05-400-804-F00.

3) Operate the engine at a minimum of 70 percent N1 for 10 minutes (AMM TASK 71-00-00-800-807-F00).

4) Do a check of the scavenge screens where the particles were found.

a) If you do not find particles, continue the engine in operation until you get the analysis from the laboratory.

b) If you find particles which are less than 0.2 inch (5 mm), do these steps:

<1> Do a check of the scavenge screens after each flight until you get the analysis from the laboratory.

<2> If you find non-magnetic particles which are more than 0.4 inch (10 mm) during post flight chip detector inspections, limit the engine operation to 10 cycles.

c) If you find non-magnetic particles which are more than 0.2 inch (5 mm), limit the engine operation to 10 cycles.

<1> Do a post flight check of the chip detector and scavenge screens until you get the analysis from the laboratory.

5) After you get the analysis from the laboratory, then do the applicable corrective action for the type of material that you found as defined in SUBTASK 79-00-00-240-001-F00.

NOTE: For more information on particle analysis, refer to the CFMI Non-Destructive Test Manual, Part 9 and Part 10, or set, SPL-2450, CD-ROM 856A2683G01.

BOEING PROPRIETARY - Copyright © Unpublished Work - See title page for details

DATE	TAIL NUMBER	STATION	AIRLINE CARD NO.	BOEING CARD NO.
				72-320-02-01

MECH	INSP

SUBTASK 79-00-00-420-001-F00

CAUTION: DO NOT INSTALL THE CHIP DETECTOR WITHOUT A PACKING. INSTALLATION OF THE CHIP DETECTOR WITHOUT A PACKING CAN CAUSE OIL LEAKAGE DURING ENGINE OPERATION AND A POSSIBLE ENGINE FAILURE.

(10) If not already done, do this task: Magnetic Chip Detector (MCD) Installation, AMM TASK 79-21-05-400-804-F00.

SUBTASK 79-00-00-410-008-F00

(11) Do this task: Close the Fan Cowl Panels, AMM TASK 71-11-02-410-801-F00.

END OF TASK

BOEING PROPRIETARY - Copyright © Unpublished Work - See title page for details

DATE	TAIL NUMBER	STATION	AIRLINE CARD NO.	BOEING CARD NO.
				72-320-02-01

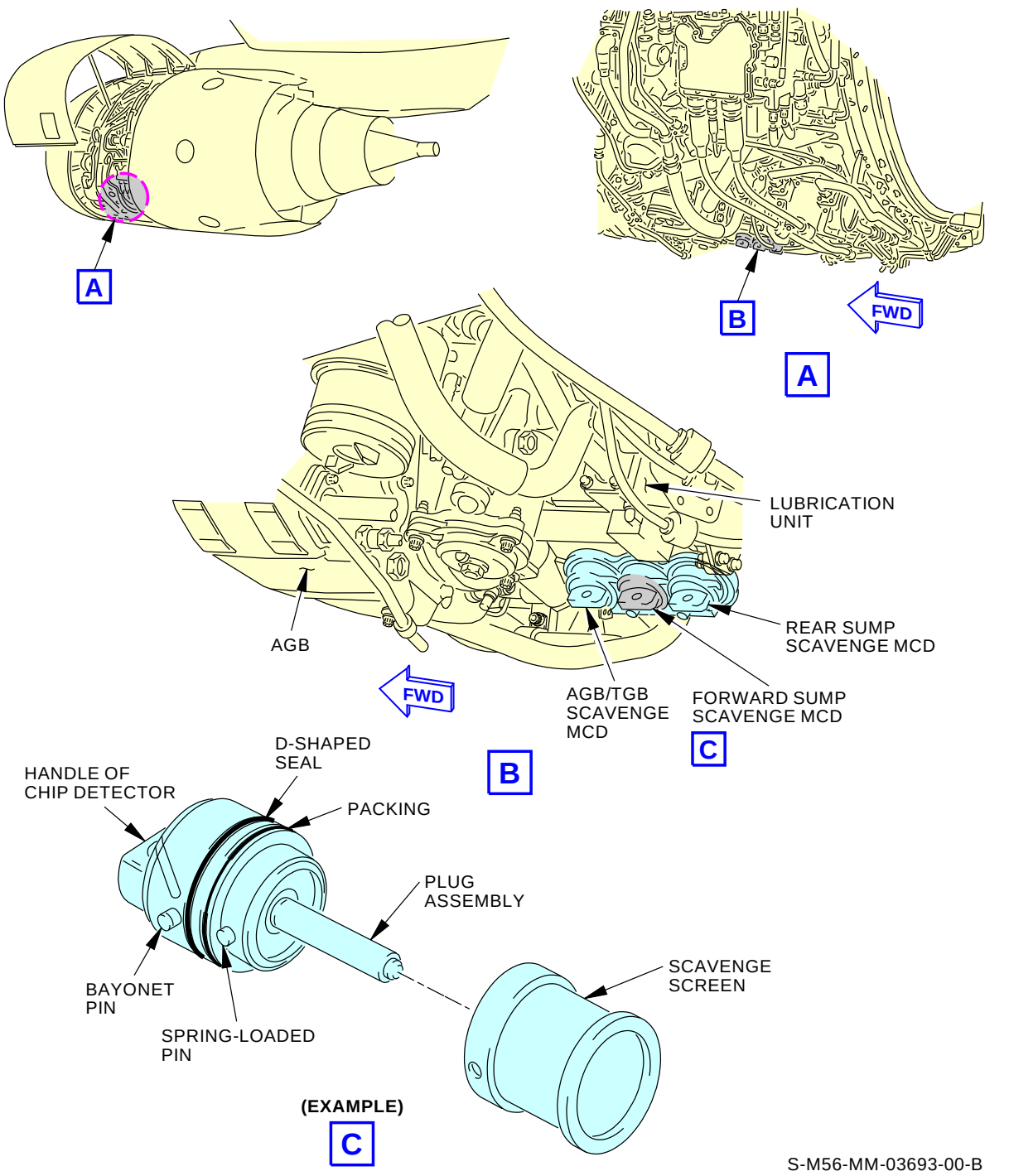

Scavenge Screen Inspection
Figure 1

BOEING PROPRIETARY - Copyright © Unpublished Work - See title page for details

DATE	TAIL NUMBER	STATION	AIRLINE CARD NO.	BOEING CARD NO.
				72-320-02-01

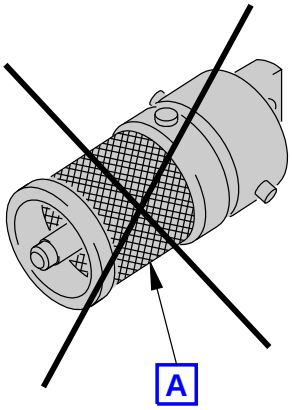

NOTE:DO NOT INSPECT WITH SCREEN INSTALLED.

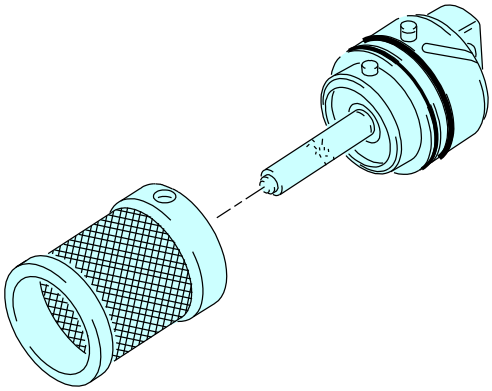

A

NOTE: REMOVE SCREEN TO CLOSELY INSPECT DETECTOR
CLEANING REQUIRED AFTER INSPECTION.

MM-00051-00-B

G22048 S0006583585_V2

Chip Detector Inspection
Figure 2

BOEING PROPRIETARY - Copyright © Unpublished Work - See title page for details

DATE	TAIL NUMBER	STATION	AIRLINE CARD NO.	BOEING CARD NO.
				72-320-02-01

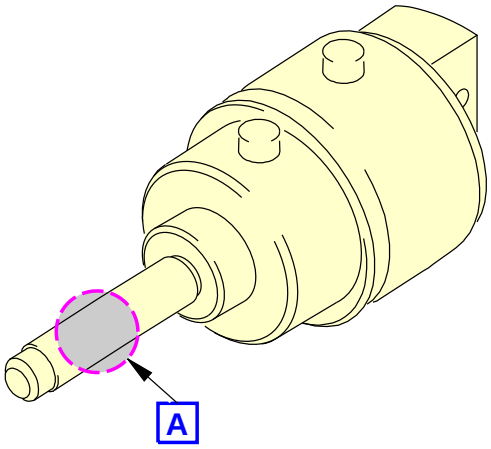

MAGNETIC CHIP DETECTOR

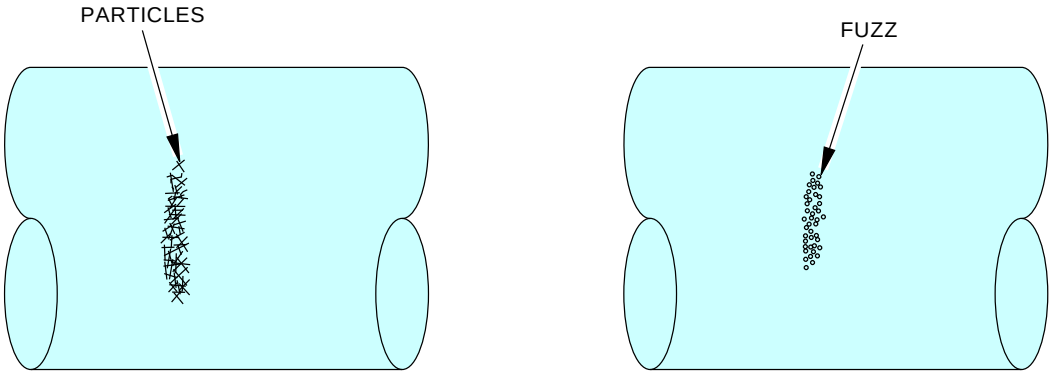

NORMAL

A

D66520 S0000161926_V2

Chip Detector Particles
Figure 3 (Sheet 1 of 2)

BOEING PROPRIETARY - Copyright © Unpublished Work - See title page for details

DATE	TAIL NUMBER	STATION	AIRLINE CARD NO.	BOEING CARD NO.
				72-320-02-01

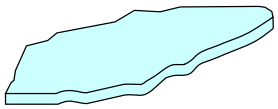

FLAKE

A

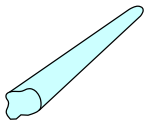

SLIVER

A

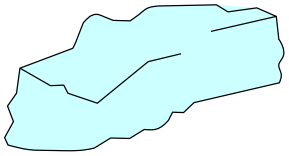

CHUNK

A

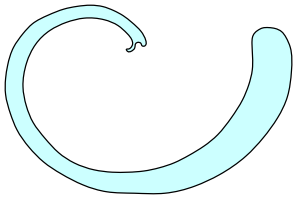

MACHINING CHIPS

A

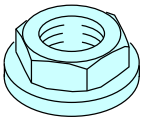

HEXAGONAL NUT 1/4 in.

A

D63060 S0000161929_V2

Chip Detector Particles
Figure 3 (Sheet 2 of 2)

BOEING PROPRIETARY - Copyright © Unpublished Work - See title page for details