SMARTCOCKPIT.COM

A319/A320/A321

Hydraulic

GENERAL

The aircraft has three continuously operating hydraulic systems : blue, green, and yellow. Each system has its own hydraulic reservoir. Normal system operating pressure is 3000 PSI (2500 PSI when powered by the RAT). Hydraulic fluid cannot be transferred from one system to another.

GENERATION

GREEN SYSTEM PUMP

A pump driven by engine 1 pressurizes the green system.

BLUE SYSTEM PUMPS

An electric pump pressurizes the blue system. A pump driven by a ram air turbine (RAT) pressurizes this system in an emergency.

YELLOW SYSTEM PUMPS

A pump driven by engine 2 pressurizes the yellow system.
An electric pump can also pressurize the yellow system, which allows yellow hydraulics to be used on the ground when the engines are stopped.
Crew members can also use a hand pump to pressurize the yellow system in order to operate the cargo doors when no electrical power is available.

POWER TRANSFER UNIT (PTU)

A bidirectional power transfer unit enables the yellow system to pressurize the green system and vice versa.
The power transfer unit comes into action automatically when the differential pressure between the green and the yellow systems is greater than 500 PSI.
The PTU therefore allows the green system to be pressurized on the ground when the engines are stopped.

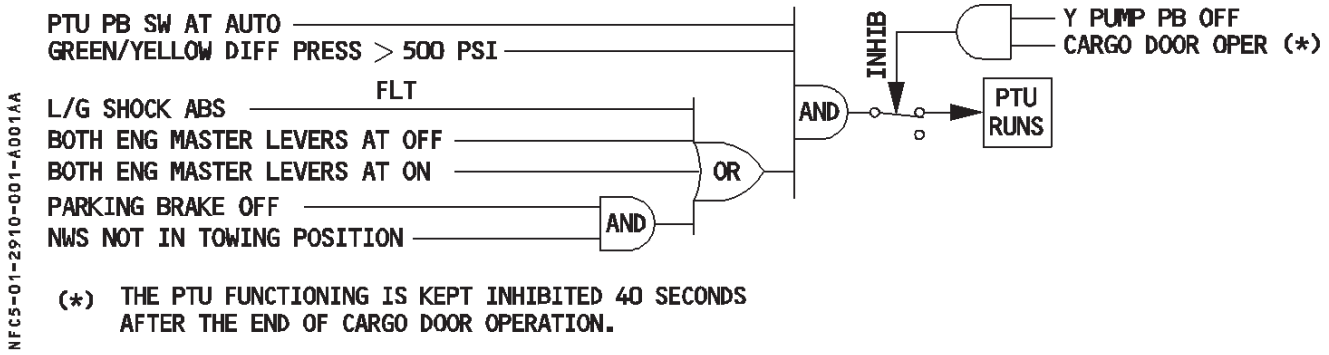

(*) THE PTU FUNCTIONING IS KEPT INHIBITED 40 SECONDS AFTER THE END OF CARGO DOOR OPERATION.

RAM AIR TURBINE (RAT)

A drop-out RAT coupled to a hydraulic pump allows the blue system to function if electrical power is lost or both engines fail. The RAT deploys automatically if AC BUS 1 and AC BUS 2 are both lost. It can be deployed manually from the overhead panel. It can be stowed only when the aircraft is on the ground.

SYSTEM ACCUMULATORS

An accumulator in each system helps to maintain a constant pressure by covering transient demands during normal operation.

PRIORITY VALVES

Priority valves cut off hydraulic power to heavy load users if hydraulic pressure in a system gets low.

FIRE SHUTOFF VALVES

Each of the green and yellow systems has a fire shutoff valve in its line upstream of its engine-driven pump. The flight crew can close it by pushing the ENG 1(2) FIRE pushbutton.

LEAK MEASUREMENT VALVES

Each system has a leak measurement valve upstream of the primary flight controls. These valves, which measure the leakage in each circuit, are closed by operation of the LEAK MEASUREMENT VALVES pushbutton switch on the maintenance panel.

FILTERS

FOR INFO

Filters clean the hydraulic fluid as follows :

- *HP filters on each system and on the reservoir filling system and the normal braking system*
- *return line filters on each line*
- *case drain filters on engine pumps and the blue electric pump (which permit maintenance to monitor engine wear by inspecting the filters for the presence of metallic particles).*

GENERATION

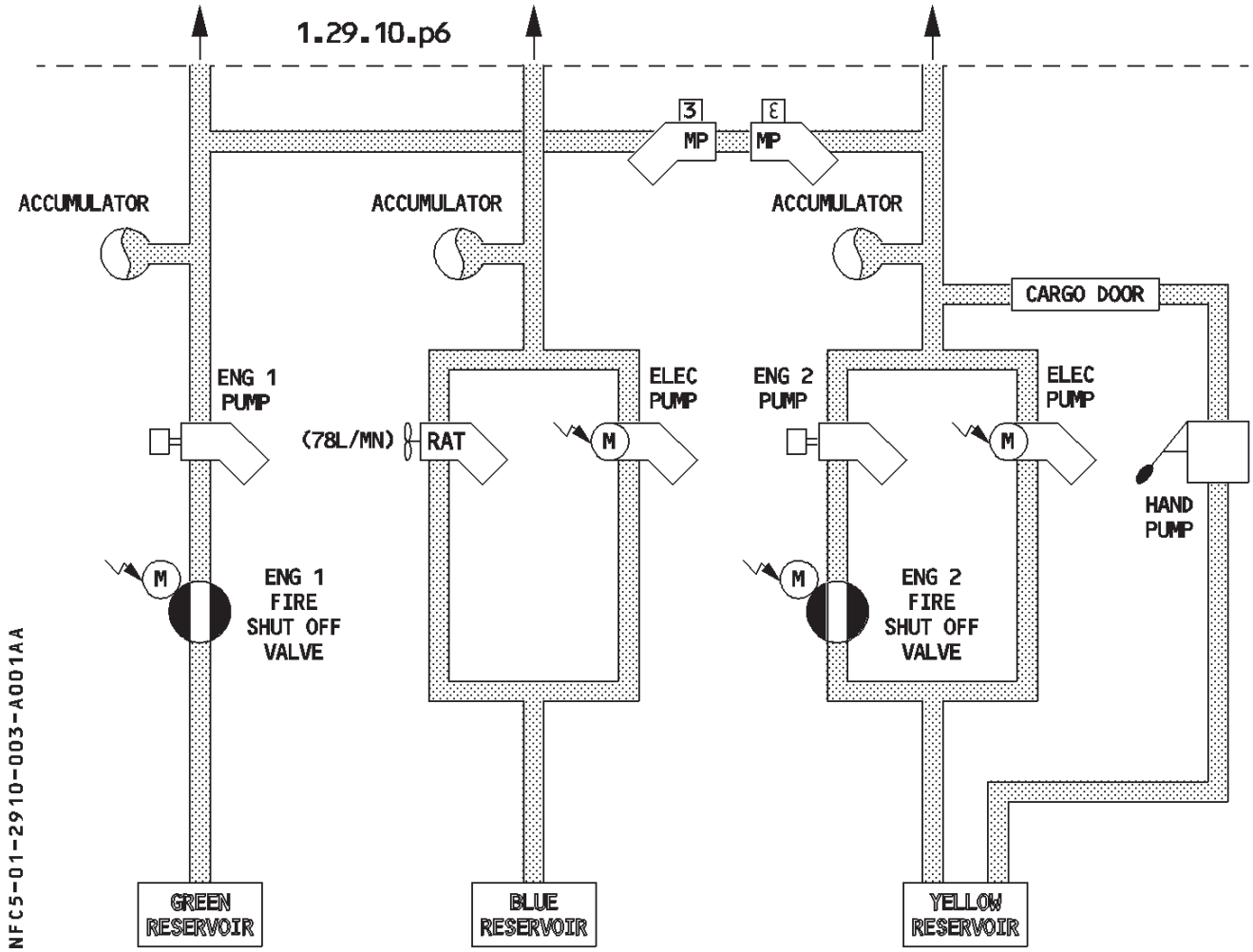
1.29.10.p6
3
MP
3
MP
ACCUMULATOR
ACCUMULATOR
ACCUMULATOR
CARGO DOOR
ENG 1
PUMP
(78L/MN)
RAT
ELEC
PUMP
ENG 2
PUMP
ELEC
PUMP
M
M
M
M
HAND
PUMP
ENG 1
FIRE
SHUT OFF
VALVE
ENG 2
FIRE
SHUT OFF
VALVE
NFC5-01-2910-003-A001AA
GREEN
RESERVOIR
BLUE
RESERVOIR
YELLOW
RESERVOIR

RESERVOIR PRESSURIZATION

Normally, HP bleed air from engine 1 pressurizes the hydraulic reservoirs automatically.
If the bleed air pressure is too low, the system takes bleed air pressure from the crossbleed duct.
The systems maintain a high enough pressure to prevent their pumps from cavitating.

FOR INFO

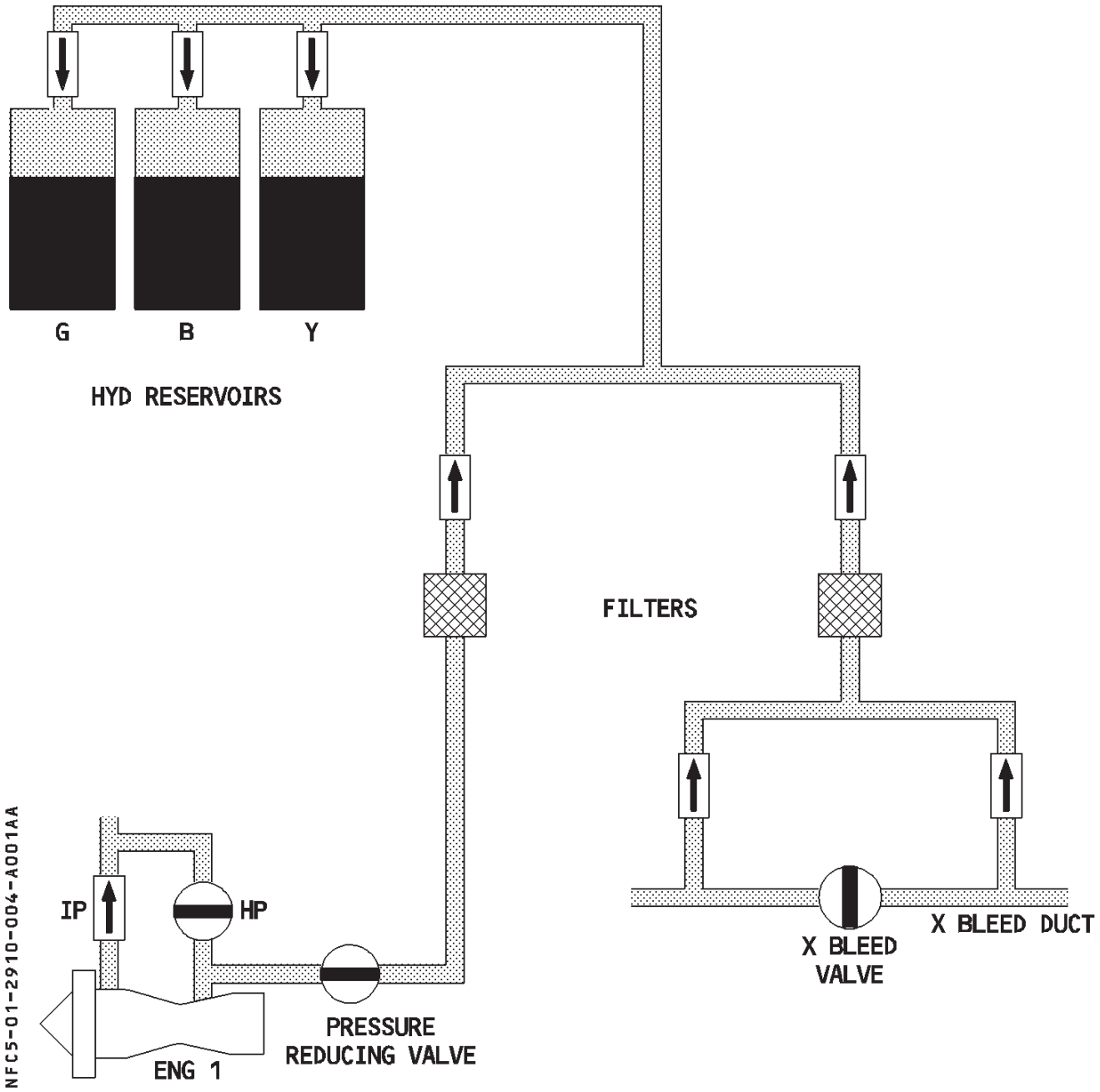

INDICATIONS

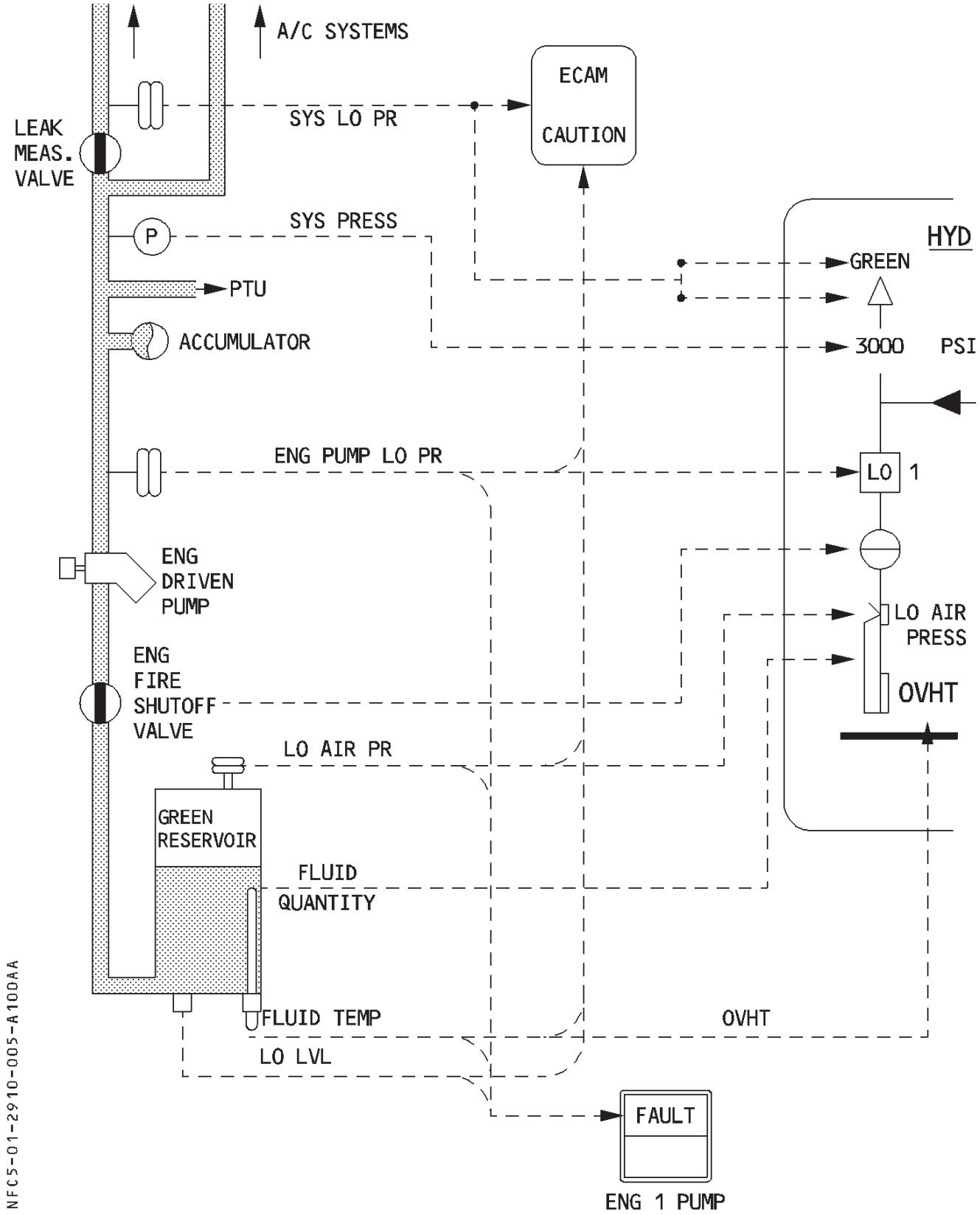

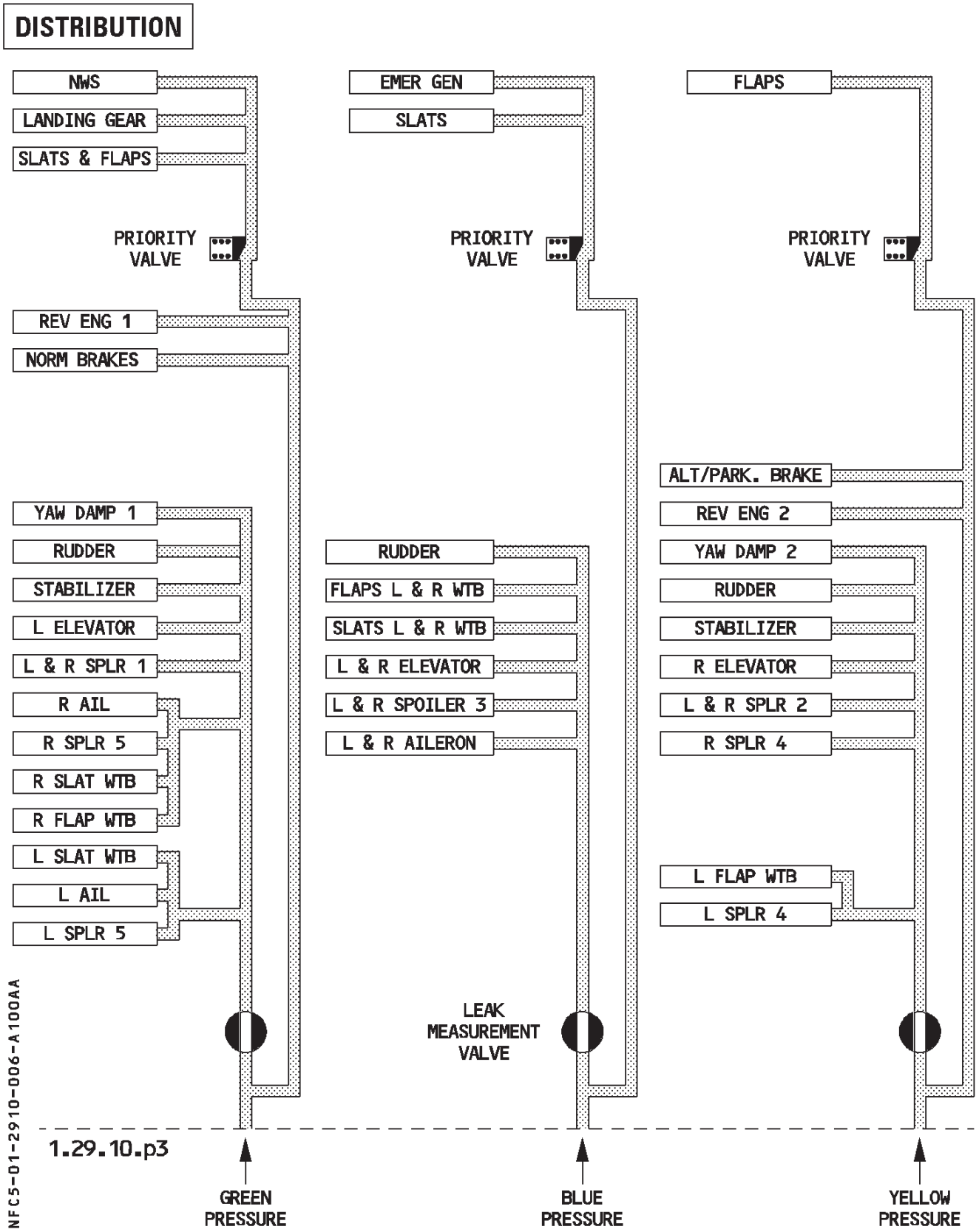
DISTRIBUTION
NWS
LANDING GEAR
SLATS & FLAPS
PRIORITY VALVE
REV ENG 1
NORM BRAKES
YAW DAMP 1
RUDDER
STABILIZER
L ELEVATOR
L & R SPLR 1
R AIL
R SPLR 5
R SLAT WTB
R FLAP WTB
L SLAT WTB
L AIL
L SPLR 5
EMER GEN
SLATS
PRIORITY VALVE
RUDDER
FLAPS L & R WTB
SLATS L & R WTB
L & R ELEVATOR
L & R SPOILER 3
L & R AILERON
LEAK MEASUREMENT VALVE
FLAPS
PRIORITY VALVE
ALT/PARK. BRAKE
REV ENG 2
YAW DAMP 2
RUDDER
STABILIZER
R ELEVATOR
L & R SPLR 2
R SPLR 4
L FLAP WTB
L SPLR 4
NFC5-01-2910-006-A100AA
1.29.10.p3
GREEN PRESSURE
BLUE PRESSURE
YELLOW PRESSURE

INDICATIONS

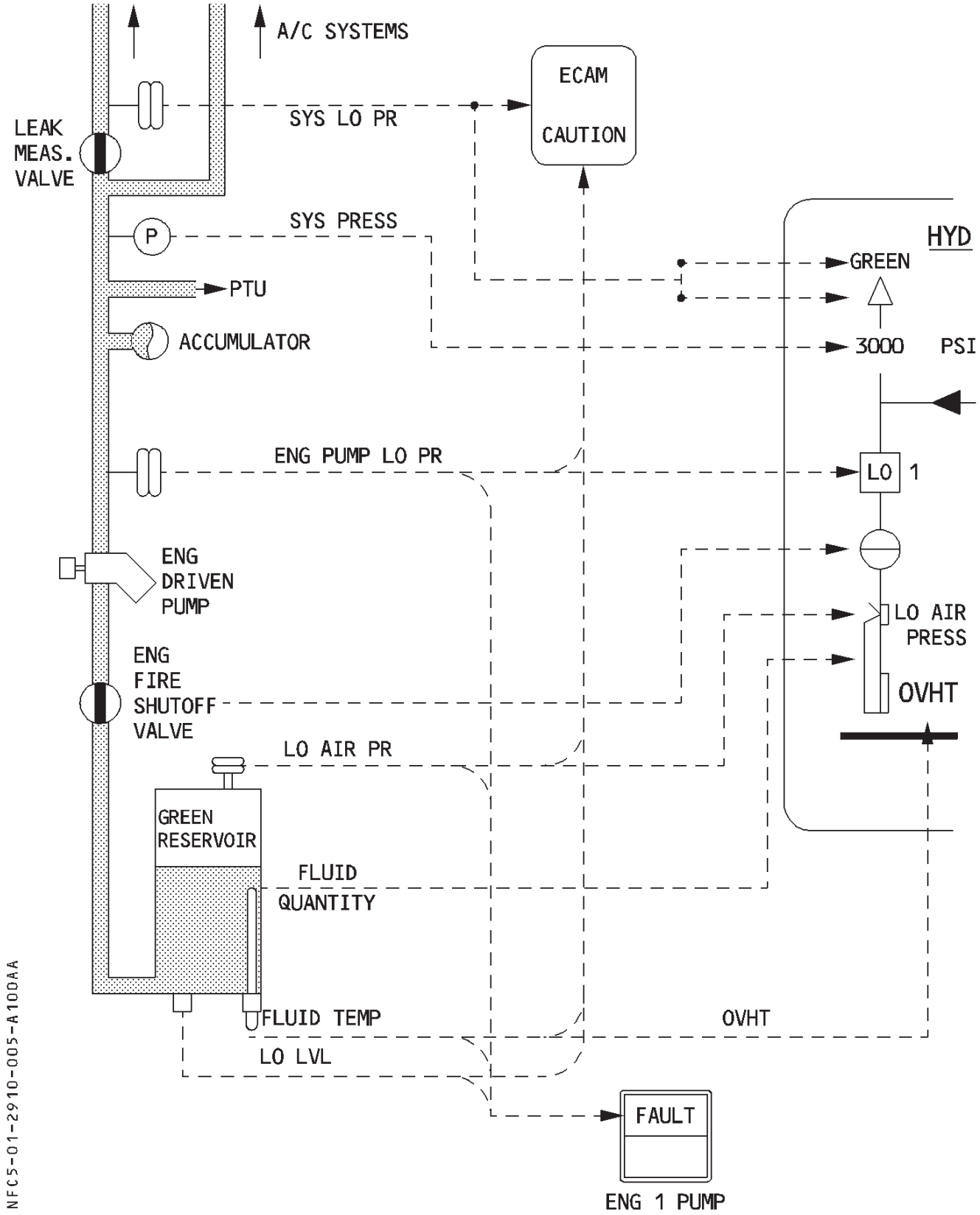

DISTRIBUTION

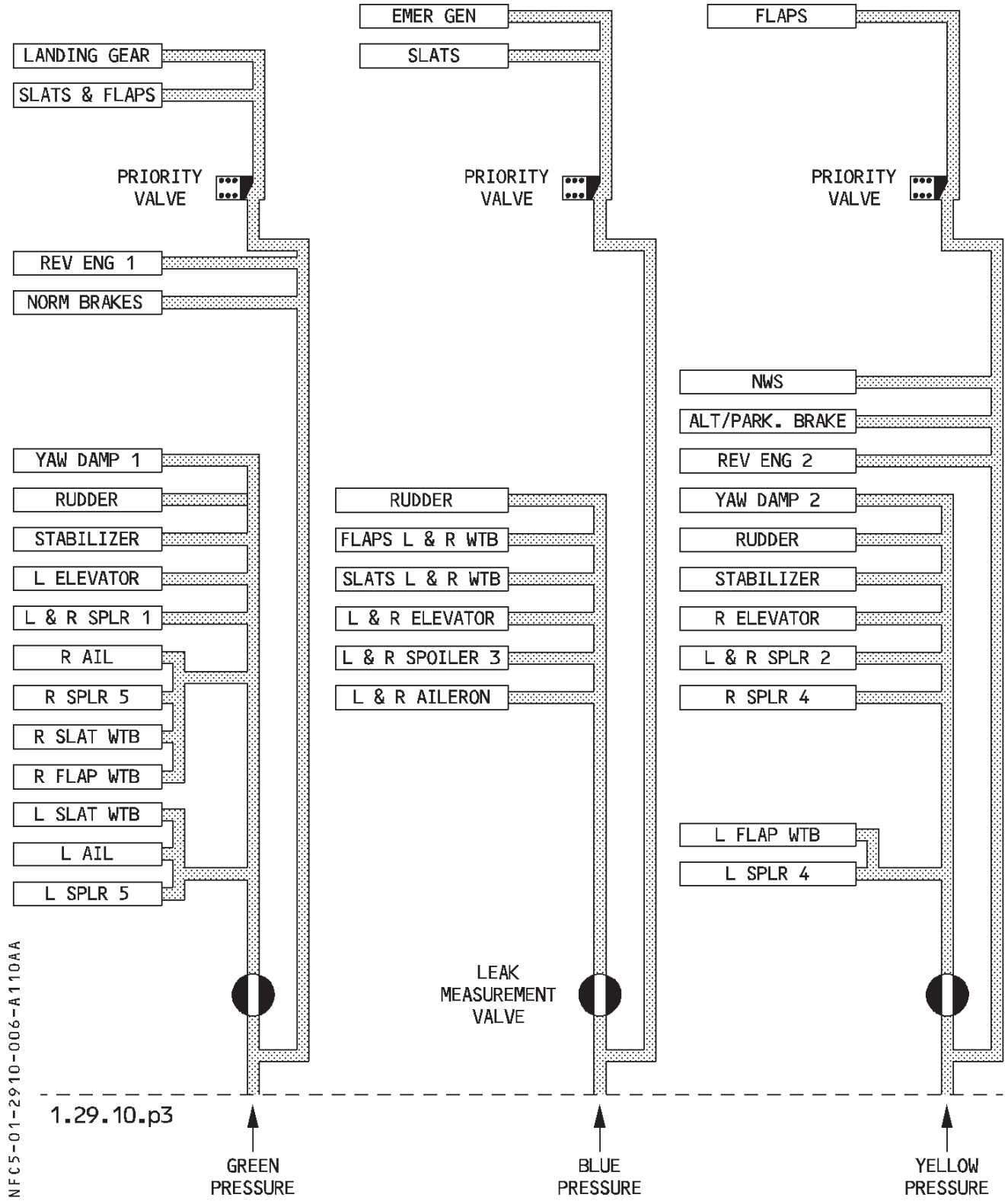

OVERHEAD PANEL

R

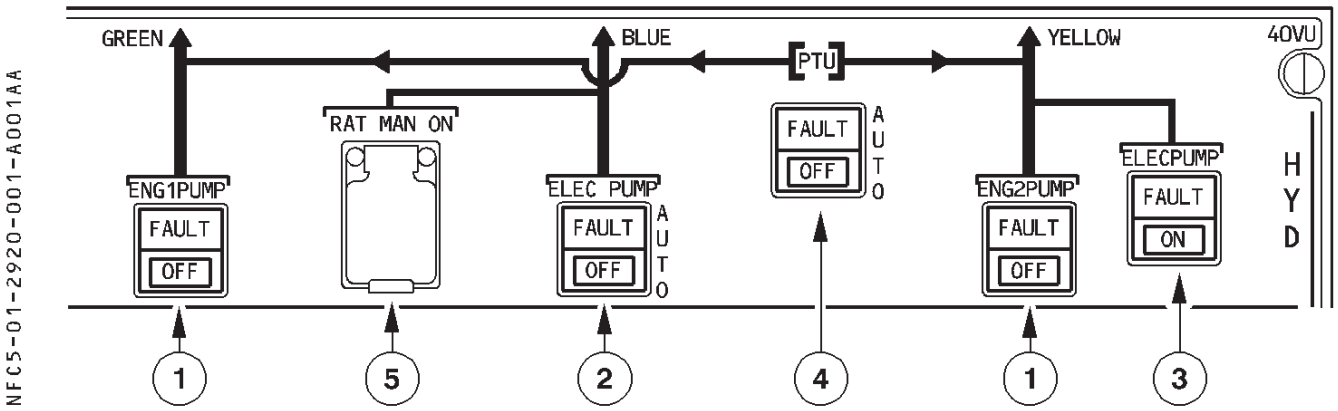

(1) ENG 1 (2) PUMP pb

On : The pump pressurizes the system when the engine is running.
OFF : The pump is depressurized. The generation of hydraulic power stops.
FAULT lt : This amber light comes on, and the ECAM caution appears, if :
- The reservoir level is low
- The reservoir overheats
- The reservoir air pressure is low
- The pump pressure is low (inhibited on the ground, when the engine is stopped).

This light goes out, when the crew selects OFF, except during an overheat. (The light stays on as long as the overheat lasts).

(2) BLUE ELEC PUMP pb

AUTO : If AC power is available, the electric pump operates :
- In flight
- On the ground, if one engine is running or if the crew has pressed the BLUE PUMP OVRD pushbutton on the maintenance panel.

OFF : The pump is de-energized.
FAULT lt : This amber light comes on, and a caution appears on the ECAM, if :
- The reservoir level is low
- The reservoir overheats
- The air pressure in the reservoir is low
- The pump is delivering low pressure (inhibited on the ground, when the engines are stopped)
- The pump overheats.

The light goes out, when the crew selects OFF, except during an overheat. (The light stays on as long as the overheat lasts).

③ YELLOW ELEC PUMP pb sw (springloaded)

ON : The electric pump is ON.
If the electrical power supply is removed, the pump will remain off when electrical power is applied again.

Off : The pump is off.
It comes on automatically when a crewman sets the lever of the cargo door manual selector valve to OPEN or CLOSE.
This inhibits the operation of other yellow system functions (except alternate braking and engine 2 reverse).

FAULT lt : This amber light, accompanied by an ECAM caution, comes on if :
– the reservoir level is low
– air pressure in the reservoir is low
– the reservoir overheats
– pump pressure is low
– the pump overheats.
The light goes out when the crew selects OFF, except during an overheat. (The light stays on as long as the overheat lasts).

④ PTU pb sw

AUTO : The bidirectional power transfer unit is armed and both the yellow and the green electrohydraulic valves are open.
The power transfer unit runs automatically when the differential pressure between the green and yellow systems is more than 500 PSI.

Note : The PTU is inhibited during the first engine start and automatically tested during the second engine start.

OFF : Both the green and the yellow PTU electrohydraulic valves close. Power transfer stops.

FAULT lt : This amber light comes on, and a caution appears on the ECAM, if :
– the green or the yellow reservoir overheats
– the green or the yellow reservoir has low air pressure
– the green or the yellow reservoir has a low flluid level.
The light goes out when the crew selects OFF, except during an overheat. (The light stays on as long as the overheat lasts).

⑤ RAT MAN ON pb

The flight crew may extend the RAT at any time by pressing the RAT MAN ON pushbutton.

Note : The RAT extends automatically if AC BUS 1 and AC BUS 2 are lost.
R *(refer to 1.24.20).*

MAINTENANCE PANEL

R

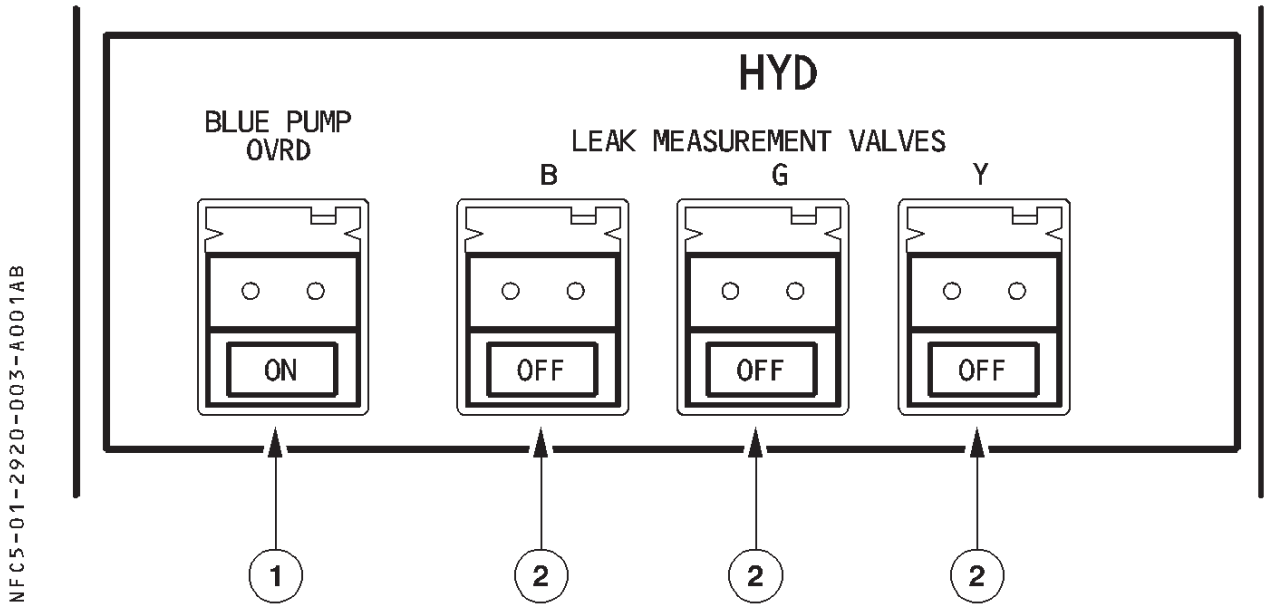

(1) BLUE PUMP OVRD pb sw (springloaded)

ON : The blue electric pump is on if the ELEC PUMP pushbutton switch on the HYD panel is at AUTO.
Off : The blue electric pump is off.

(2) LEAK MEASUREMENT VALVES pb sw

OFF : The corresponding electrohydraulic valve closes and shuts off hydraulic supply to the primary flight controls.
On : The corresponding electrohydraulic valve opens to go back to normal hydraulic supply.

ECAM HYD PAGE

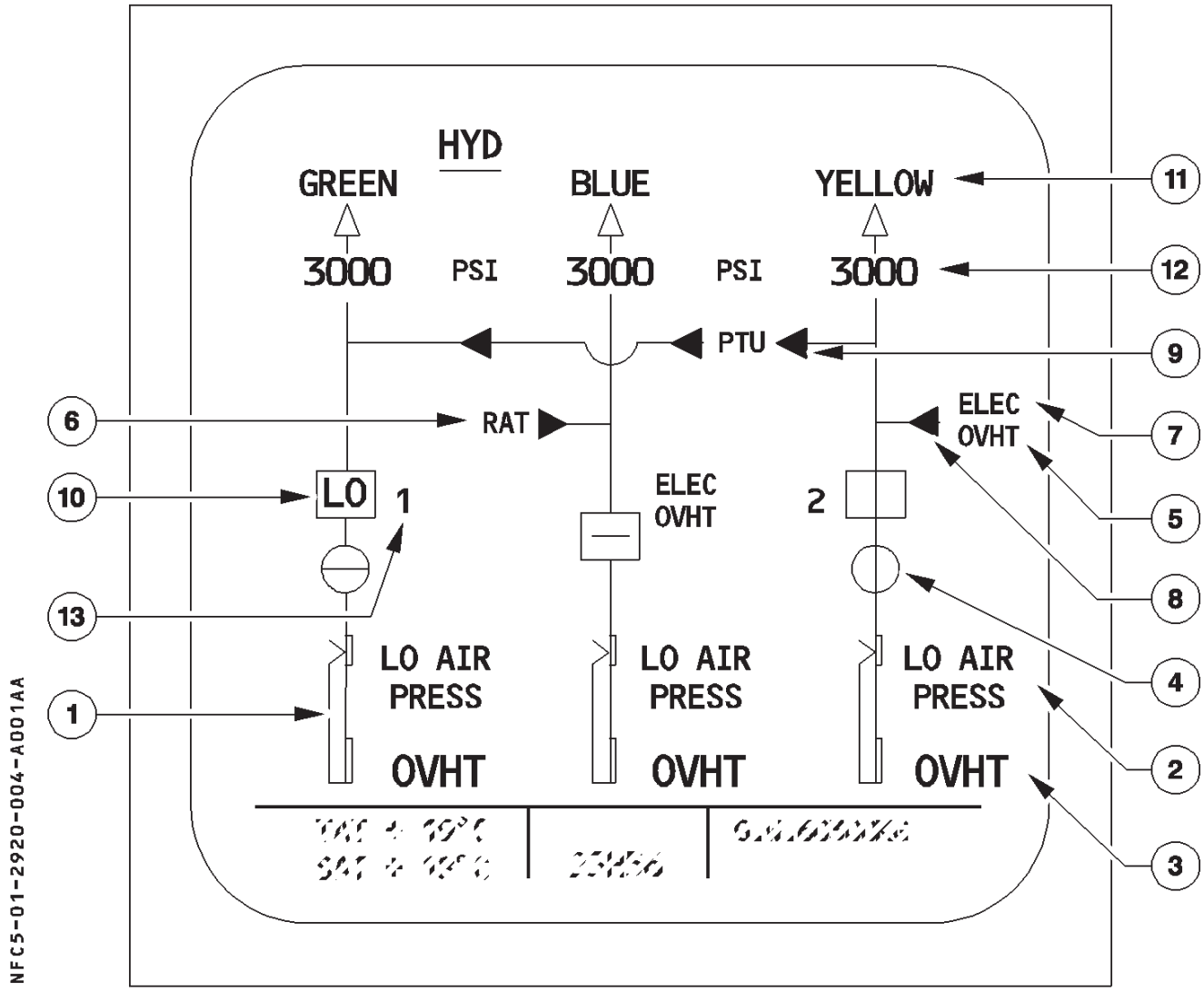

(1) Reservoir quantity

This indication is green unless the fluid level gets below the warning level, in which case it becomes amber.

FOR INFO

R

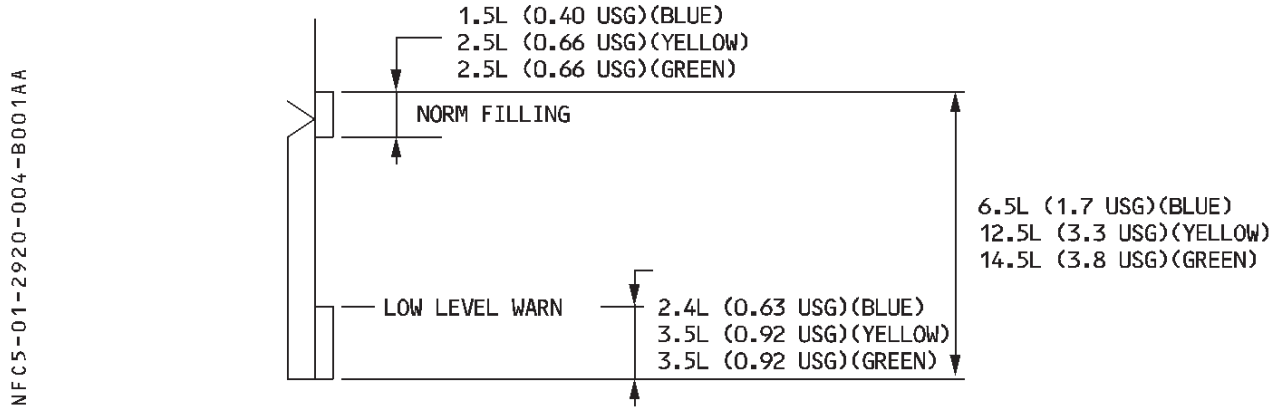

MAINTENANCE PANEL

R

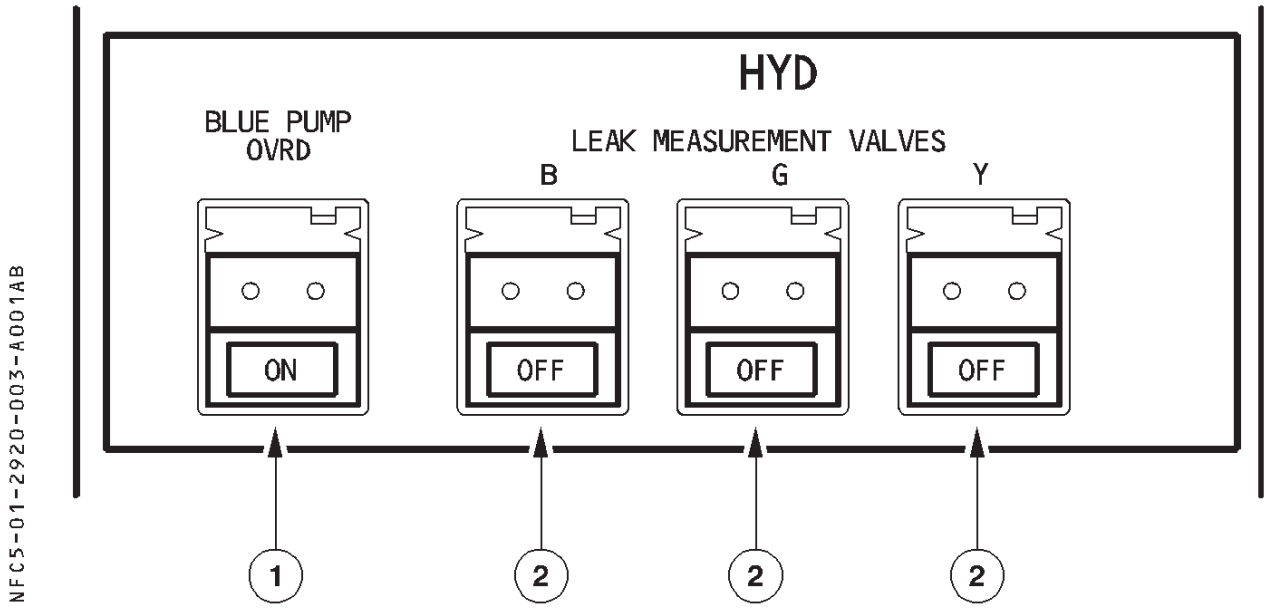

(1) BLUE PUMP OVRD pb sw (springloaded)

ON : The blue electric pump is on if the ELEC PUMP pushbutton switch on the HYD panel is at AUTO.
Off : The blue electric pump is off.

(2) LEAK MEASUREMENT VALVES pb sw

OFF : The corresponding electrohydraulic valve closes and shuts off hydraulic supply to the primary flight controls.
On : The corresponding electrohydraulic valve opens to go back to normal hydraulic supply.

ECAM HYD PAGE

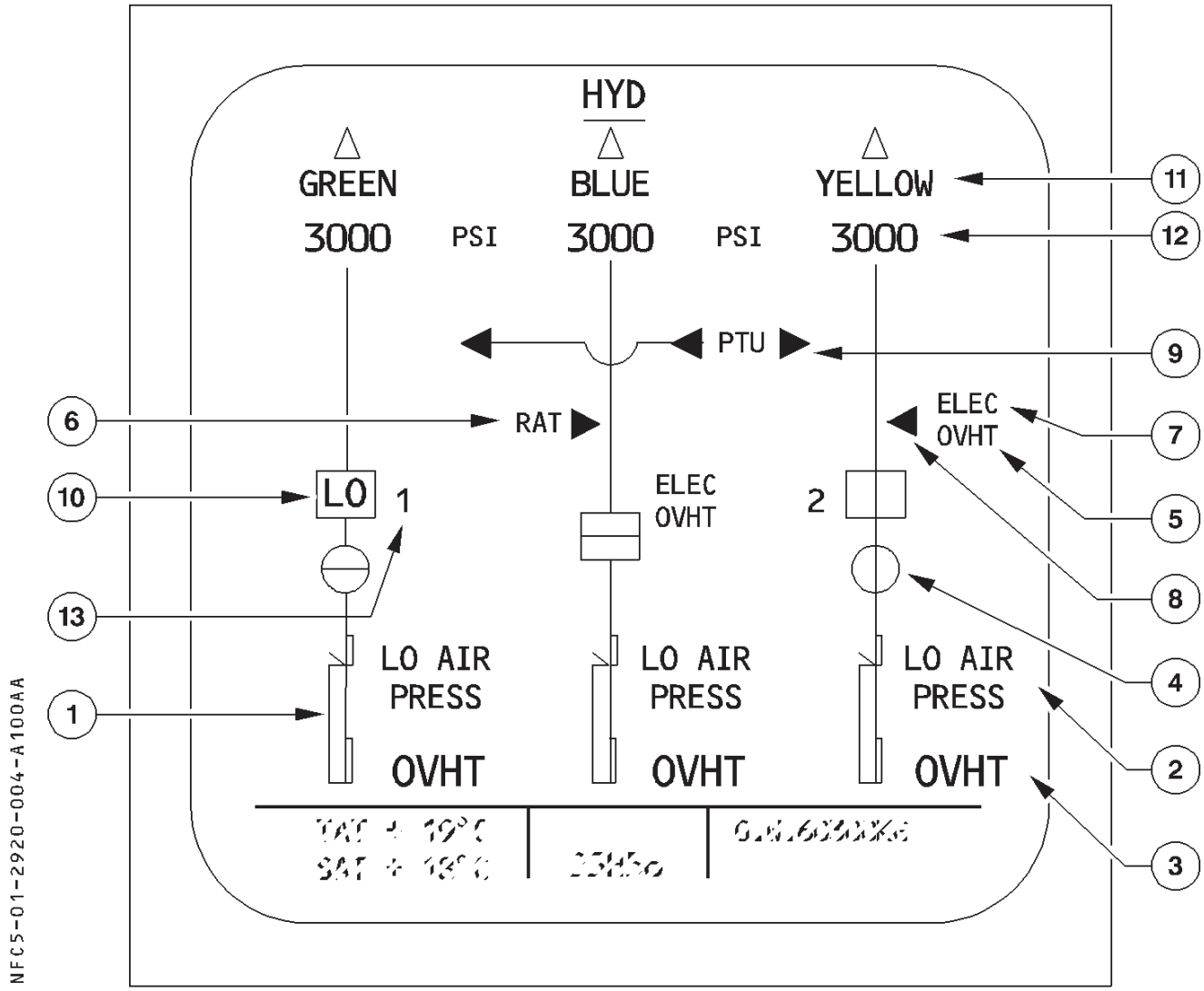

(1) Reservoir quantity

It is in green, unless the fluid level goes below the warning level, in which case it becomes amber.

FOR INFO

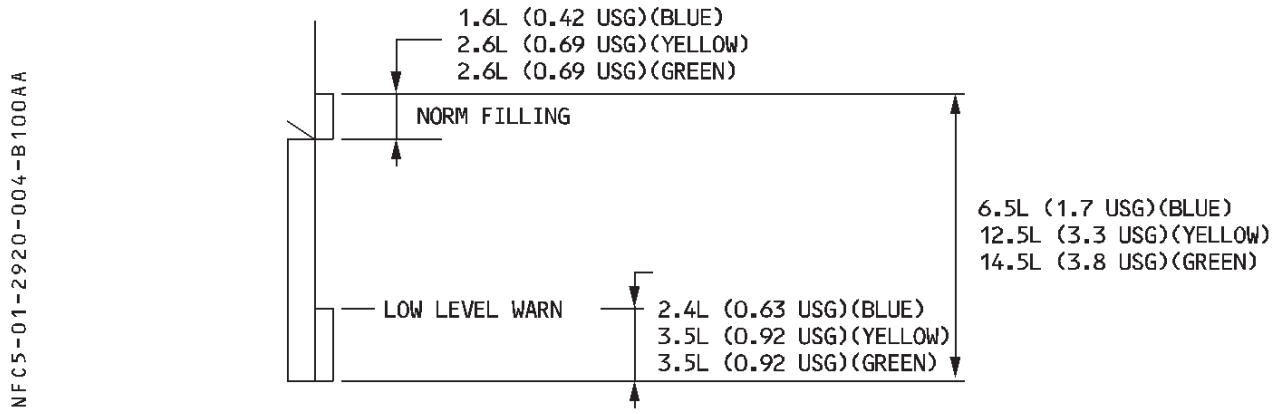

② Reservoir LO AIR PRESS

This appears in amber, and a caution appears on ECAM, if the air pressure for the indicated reservoir drops below normal.

③ Reservoir OVHT

This appears in amber, and a caution appears on ECAM, if the temperature of returning hydraulic fluid temperature at the inlet to its reservoir is above normal.

④ FIRE VALVE

Cross line Amber : The valve is fully closed.
In line Green : The valve is not fully closed.

⑤ OVHT

This appears in amber if the electric pump for that system (blue or yellow) overheats.

⑥ RAT

RAT ▷ : white The RAT is stowed.
RAT ▶– : Green The RAT is not stowed.
RAT ▶ : Amber Pressure for stowing the RAT has been applied, or the RAT pump is not available.

⑦ ELEC

This legend, normally white, becomes amber if the associated power supply fails.

⑧ YELLOW ELEC PUMP control

◁ : White The electric pump is off.
–◀ : Green The electric pump is ON.
◀ : Amber The electric pump is ON and the yellow system has low pressure.

(9) PTU control

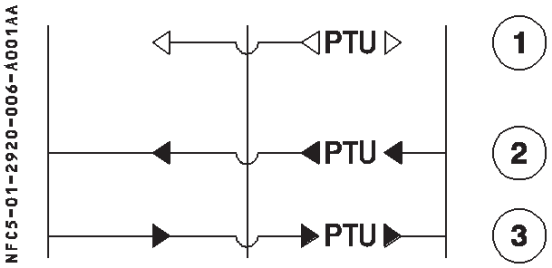

(1) Green : The power transfer unit (PTU) pushbutton switch is in AUTO and the PTU is not transferring pressure.
Amber : The PTU pushbutton switch is OFF.

(2) Green : The PTU is supplying the green hydraulic system.

(3) Green : The PTU is supplying the yellow hydraulic system.

(10) ENG PUMP control and low pressure indication

In line (Green) : The pushbutton switch for the designated PUMP is on and hydraulic pressure is normal.
Cross line (Amber) : The pushbutton switch for the designated PUMP is OFF.
"LO" (Amber) The pushbutton switch for the designated PUMP is on and hydraulic pressure is low.

(11) System label

	pressure > 1450 psi	pressure < 1450 psi
YELLOW	white	amber
△	green	amber

(12) System pressure

This legend, normally green, becomes amber when system pressure is below 1450 psi.

(13) PUMP

This legend, normally white, becomes amber when N2 is below idle.

WARNINGS AND CAUTIONS

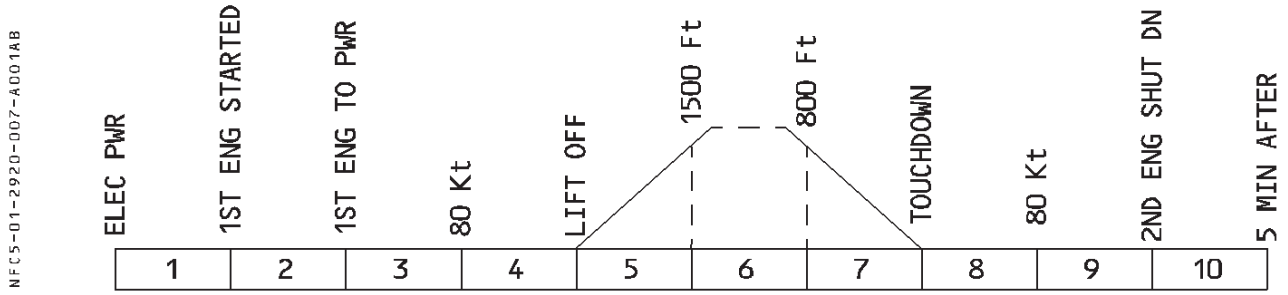

R

E / WD : FAILURE TITLE conditions	AURAL WARNING	MASTER LIGHT	SD PAGE CALLED	LOCAL WARNING	FLT PHASE INHIB
B + Y B + G SYS LO PR Y + G system pressure ≤ 1450 psi (reset if pressure ≥ 1750 psi)	CRC	MASTER WARN	HYD	FAULT lt	4, 5 *
G (Y)(B) RSVR LO AIR PR reservoir air pressure ≤ 22 psi (reset if air pressure ≥ 25 psi)	SINGLE CHIME	MASTER CAUT		FAULT lt on associated pump(s) pb and on PTU pb if Y or G sys affected	3, 4, 5, 7, 8
G (Y)(B) RSVR OVHT fluid temperature ≥ 93°C (reset if temp ≤ 88°C)					
G (Y)(B) RSVR LO LVL fluid quantity : < 3.5 L (0.92 USG) (green-yellow) < 2.4 L (0.63 USG) (blue)					4, 5, 7, 8
G (Y) ENG 1(2) PUMP LO PR pump outlet pressure ≤ 1750 psi (reset if pressure ≥ 2200 psi)				FAULT lt on affected pump pb	
Y ELEC PUMP LO PR yellow system pressure ≤ 1450 psi (reset if pressure ≥ 1750 psi) with - Y ELEC PUMP pb at ON - Y ENG PUMP and PTU not available					
B ELEC PUMP LO PR pump outlet pressure ≤ 1450 psi (reset if pressure ≥ 1750 psi)					
B ELEC PUMP OVHT Y ELEC PUMP OVHT					3, 4, 5, 7, 8
G (Y) SYS LO PR pump outlet pressure ≤ 1450 psi (reset if pressure ≥ 1750 psi)					4, 5, 7, 8*
B SYS LO PR system pressure ≤ 1450 psi (reset if pressure ≥ 1750 psi)				NIL	1, 4, 5, 7, 8, 10

R

E / WD : FAILURE TITLE conditions	AURAL WARNING	MASTER LIGHT	SD PAGE CALLED	LOCAL WARNING	FLT PHASE INHIB
PTU FAULT PTU not running on ground in case differential pressure higher than 650 psi between G and Y system, or in flight PTU still at AUTO position in case of G or Y reservoir low level and G or Y system low pressure.	SINGLE CHIME	MASTER CAUT	HYD	FAULT lt only in case of G or Y RSVR LO LVL or RSVR LO AIR PR or RSVR OVHT	3, 4, 5, 8, 9, 10
RAT FAULT RAT not fully stowed or pressure present in RAT stowing actuator or RAT pump not available				NIL	3, 4, 5, 6, 7, 8, 9

* Inhibited on the ground (flight phases 1, 2, 9, 10) when corresponding engine is shut down.

MEMO DISPLAY

– "RAT OUT" appears green, if the ram air turbine is not fully stowed.
  The color changes to amber during flight phases 1 and 2.
– "HYD PTU" appears green, when the power transfer unit is running.

WARNINGS AND CAUTIONS

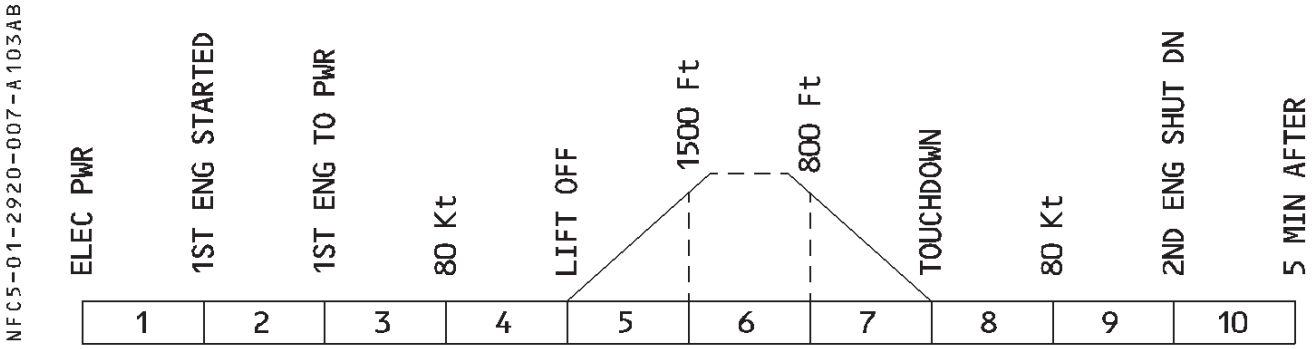

R

E / WD : FAILURE TITLE conditions	AURAL WARNING	MASTER LIGHT	SD PAGE CALLED	LOCAL WARNING	FLT PHASE INHIB
B + Y B + G SYS LO PR Y + G system pressure ≤ 1450 psi reset if pressure ≥ 1750 psi	CRC	MASTER WARN	HYD	FAULT lt	4, 5 *
G (Y) RSVR LO AIR PR reservoir air pressure ≤ 22 psi reset if air pressure ≥ 25 psi	SINGLE CHIME	MASTER CAUT		FAULT lt on associated pump(s) pb and on PTU pb if Y or G sys affected	3, 4, 5, 7, 8
B RSVR LO AIR PR reservoir air pressure ≤ 30 psi (detected in flight but only displayed on ground after landing)					1, 2, 3, 4, 5, 6, 7
B RSVR LO AIR PR reservoir air pressure ≤ 22 psi reset if pressure ≥ 25 psi					3, 4, 5, 7, 8
G (Y)(B) RSVR OVHT fluid temperature ≥ 93°C reset if temp ≤ 88°C					
G (Y)(B) RSVR LO LVL fluid quantity : < 3.5 L (0.92 USG) (green-yellow) < 2.4 L (0.63 USG) (blue)					4, 5, 7, 8
G (Y) ENG 1(2) PUMP LO PR pump outlet pressure ≤ 1750 psi reset if pressure ≥ 2200 psi				FAULT lt on affected pump pb	
Y ELEC PUMP LO PR yellow system pressure ≤ 1450 psi (reset if pressure ≥ 1750 psi) with - Y ELEC PUMP pb at ON - Y ENG PUMP and PTU not available					
B ELEC PUMP LO PR pump outlet pressure ≤ 1450 psi reset if pressure ≥ 1750 psi					
B ELEC PUMP OVHT Y ELEC PUMP OVHT					3, 4, 5, 7, 8
G (Y) SYS LO PR system pressure ≤ 1450 psi reset if pressure ≥ 1750 psi				NIL	4, 5, 7, 8 *
B SYS LO PR system pressure ≤ 1450 psi reset if pressure ≥ 1750 psi					1, 4, 5, 7, 8, 10

R

E / WD : FAILURE TITLE conditions	AURAL WARNING	MASTER LIGHT	SD PAGE CALLED	LOCAL WARNING	FLT PHASE INHIB
PTU FAULT PTU not running on ground in case differential pressure higher than 650 psi between G and Y system, or in flight PTU still at AUTO position in case of G or Y reservoir low level and G or Y system low pressure.	SINGLE CHIME	MASTER CAUT	HYD	FAULT lt only in case of G or Y RSVR LO LVL or RSVR LO AIR PR or RSVR OVHT	3, 4, 5, 8, 9, 10
RAT FAULT RAT not fully stowed or pressure present in RAT stowing actuator or RAT pump not available				NIL	3, 4, 5, 6, 7, 8, 9

* Inhibited on the ground (flight phases 1, 2, 9, 10) when corresponding engine is shut down.

MEMO DISPLAY

– "RAT OUT" appears green, if the ram air turbine is not fully stowed.
  The color changes to amber during flight phases 1 and 2.
– "HYD PTU" appears green, when the power transfer unit is running.

BUS EQUIPMENT LIST

R

		NORM		EMER ELEC		
		AC	DC	AC ESS	DC ESS	HOT
ENG 1 driven PUMP control			DC1			
ENG 2 driven PUMP control			DC2			
ENG 1 FIRE shut off valve					X	
ENG 2 FIRE shut off valve					X	
BLUE ELEC PUMP	power	AC1				
	control				X	
Yellow ELEC PUMP	power	AC2 *				
	control		DC2			
Power Transfer Unit			DC2			
LEAK MEASUREMENT VALVES			DC GRND/FLT			
RAT	Manual control					HOT 2
	Auto control					HOT 1

* or from external power.