SMARTCOCKPIT.COM

A319/A320/A321

Pneumatics

GENERAL

The pneumatic system supplies high-pressure air for :
- air conditioning
- engine starting
- wing anti-icing
- water pressurization
- hydraulic reservoir pressurization

High-pressure air has three sources :
- engine bleed systems
- APU load compressor
- HP ground connection

A crossbleed duct interconnects the engine bleed systems and receives air from the APU and ground sources when appropriate.
A valve mounted on the crossbleed duct allows the left side (engine 1) and right side (engine 2) to be interconnected.
Two Bleed Monitoring Computers (BMC1 and BMC2), the overhead control panel, and the ECAM control and monitor the operation of the pneumatic system.
A leak detection system detects any overheating in the vicinity of hot air ducts.

ENGINE BLEED SYSTEM

GENERAL

The aircraft has two similar engine bleed air systems.
Each system is designed to :
– select the compressor stage to use as a source of air
– regulate the bleed air temperature
– regulate the bleed air pressure.
A Bleed Monitoring Computer (BMC) controls and monitors each system.
Each BMC receives information about bleed pressure and temperature and valve position.
Each is connected with :
– other systems using air or information from the bleed system
– the other BMC.
Each supplies indications and warnings to the ECAM and CFDS.
If one BMC fails, the other one takes over most of the monitoring functions.
Each bleed valve is pneumatically operated and controlled electrically by its associated BMC.

FOR INFO

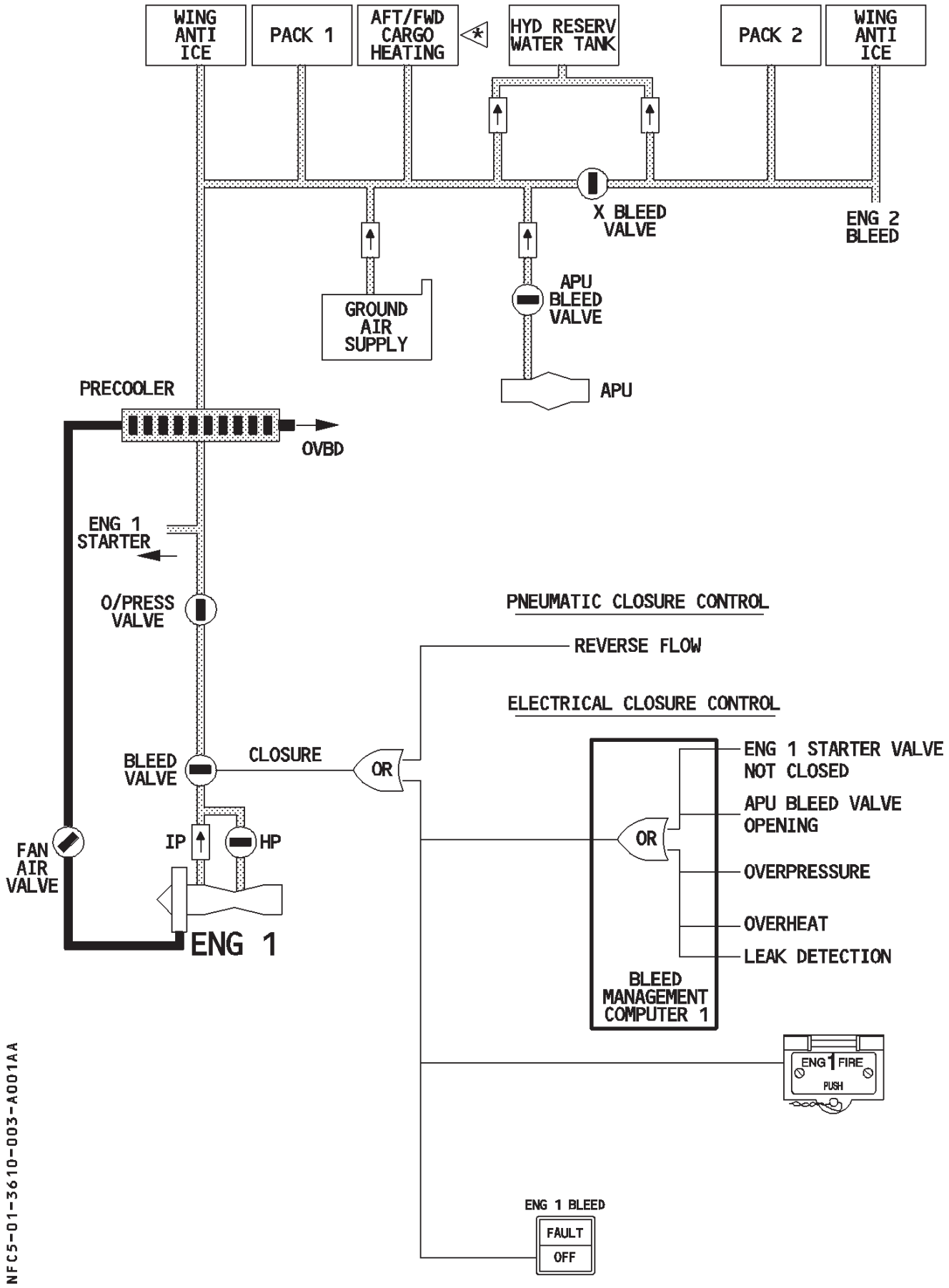
WING ANTI ICE
PACK 1
AFT/FWD CARGO HEATING
HYD RESERV WATER TANK
PACK 2
WING ANTI ICE
X BLEED VALVE
ENG 2 BLEED
GROUND AIR SUPPLY
APU BLEED VALVE
APU
PRECOOLER
OVBD
ENG 1 STARTER
O/PRESS VALVE
PNEUMATIC CLOSURE CONTROL
REVERSE FLOW
ELECTRICAL CLOSURE CONTROL
BLEED VALVE
CLOSURE
OR
ENG 1 STARTER VALVE NOT CLOSED
APU BLEED VALVE OPENING
OR
OVERPRESSURE
OVERHEAT
LEAK DETECTION
BLEED MANAGEMENT COMPUTER 1
FAN AIR VALVE
IP
HP
ENG 1
ENG 1 FIRE
PUSH
ENG 1 BLEED
FAULT
OFF
NFC5-01-3610-003-A001AA

AIR BLEED SELECTION

Air is normally bled from the intermediate pressure stage (IP) of engine's high-pressure (HP) compressor to minimize fuel penalty.
At low engine speed, when the pressure and temperature of the IP air are too low, the system bleeds air from the HP stage and maintains it at 36 ± 4 psi.
An intermediate pressure check valve downstream of the IP port closes to prevent air from the HP stage from being circulated to the IP stage.

FOR INFO

The HP valve closes automatically
- *pneumatically*
  - *in case of low upstream pressure*
  - *in case of excessive upstream pressure*
- *electrically when the bleed valve is closed electrically.*

ECAM INDICATION

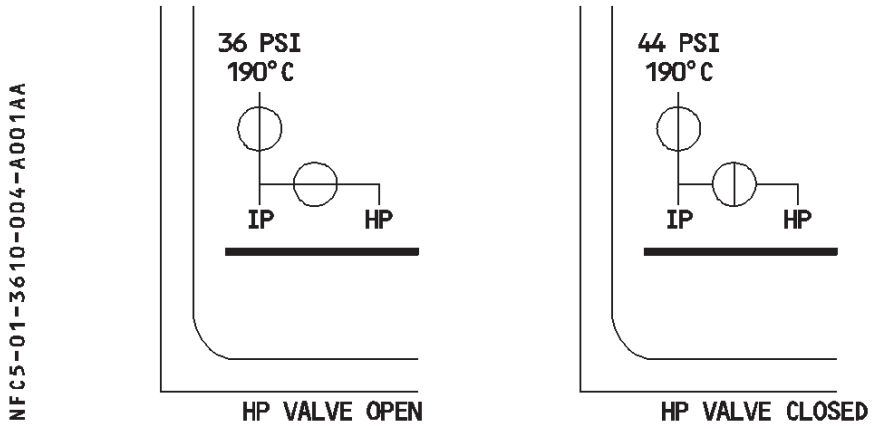

FOR INFO

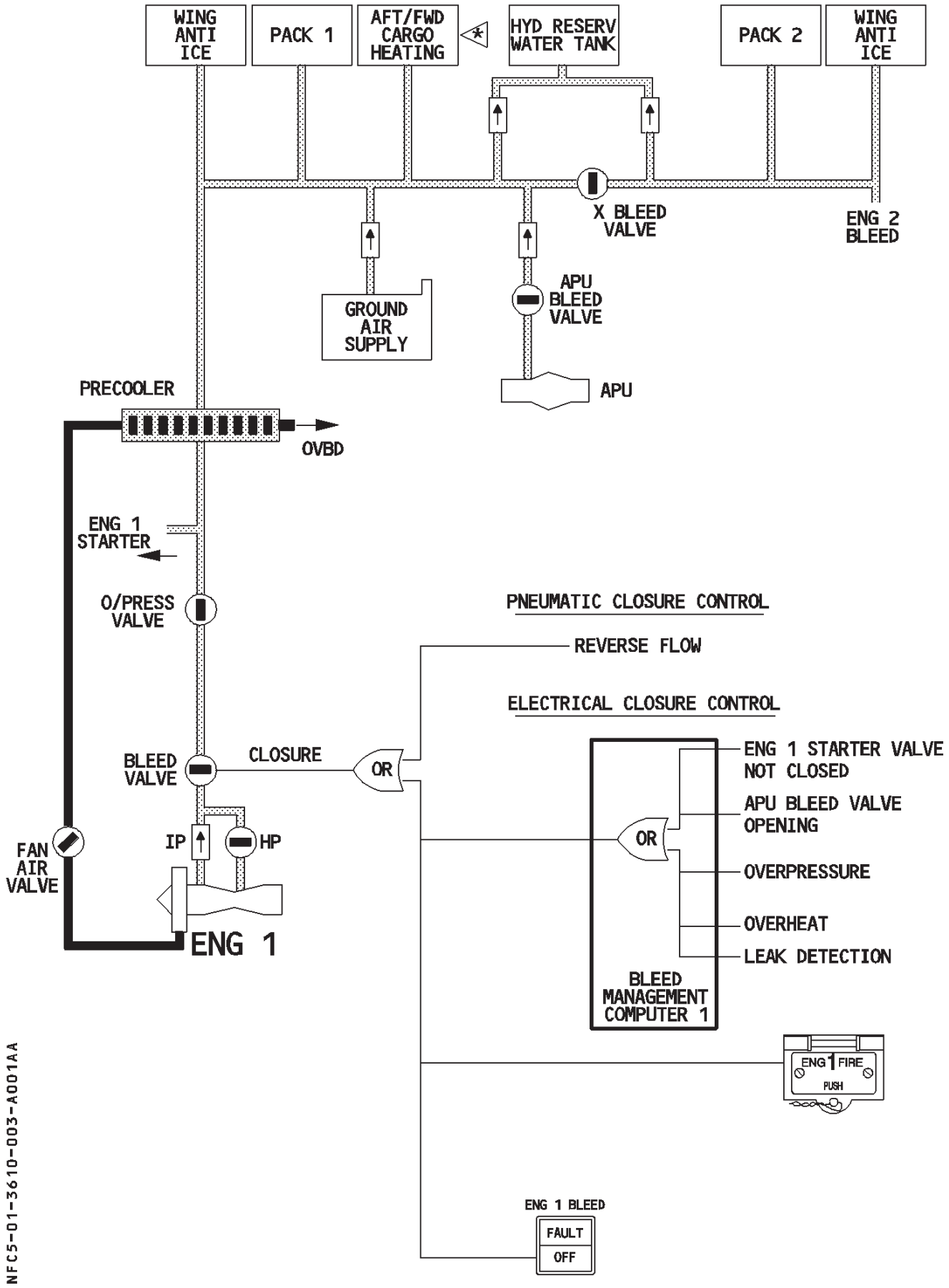
WING ANTI ICE
PACK 1
AFT/FWD CARGO HEATING
HYD RESERV WATER TANK
PACK 2
WING ANTI ICE
X BLEED VALVE
ENG 2 BLEED
GROUND AIR SUPPLY
APU BLEED VALVE
APU
PRECOOLER
OVBD
ENG 1 STARTER
O/PRESS VALVE
PNEUMATIC CLOSURE CONTROL
REVERSE FLOW
ELECTRICAL CLOSURE CONTROL
BLEED VALVE
CLOSURE
OR
ENG 1 STARTER VALVE NOT CLOSED
APU BLEED VALVE OPENING
OR
OVERPRESSURE
OVERHEAT
LEAK DETECTION
FAN AIR VALVE
IP
HP
ENG 1
BLEED MANAGEMENT COMPUTER 1
ENG 1 FIRE
PUSH
ENG 1 BLEED
FAULT
OFF
NFC5-01-3610-003-A001AA

AIR BLEED SELECTION

Air is normally bled from the intermediate pressure stage (IP) of engine's high-pressure (HP) compressor to minimize fuel penalty.
At low engine speed, when the pressure and temperature of the IP air are too low, the system bleeds air from the HP stage and maintains it at 36 ± 4 psi.
An intermediate pressure check valve downstream of the IP port closes to prevent air from the HP stage from being circulated to the IP stage.

FOR INFO

The HP valve closes automatically
- *pneumatically*
  - *in case of low upstream pressure*
  - *in case of excessive upstream pressure*
- *electrically :*
  - *when the bleed valve is closed electrically*
  - R *in case of overpressure upstream of the HP valve with wing anti-ice off, two packs on*
  - R *and aircraft altitude above 15000 feet.*

ECAM INDICATION

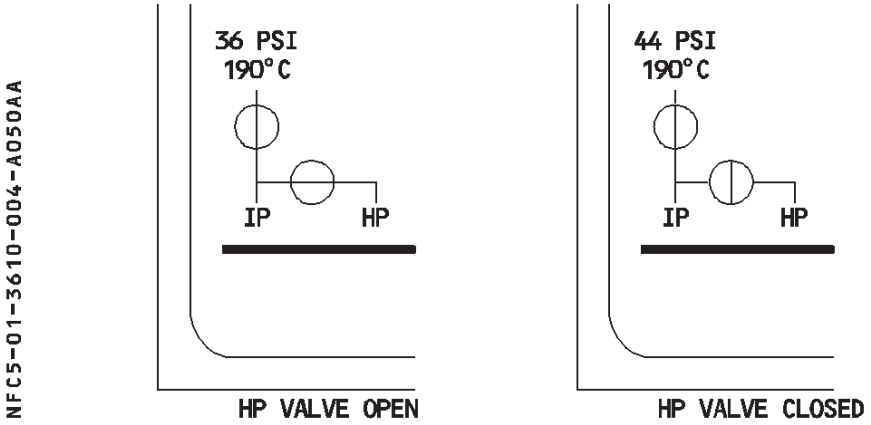

FOR INFO

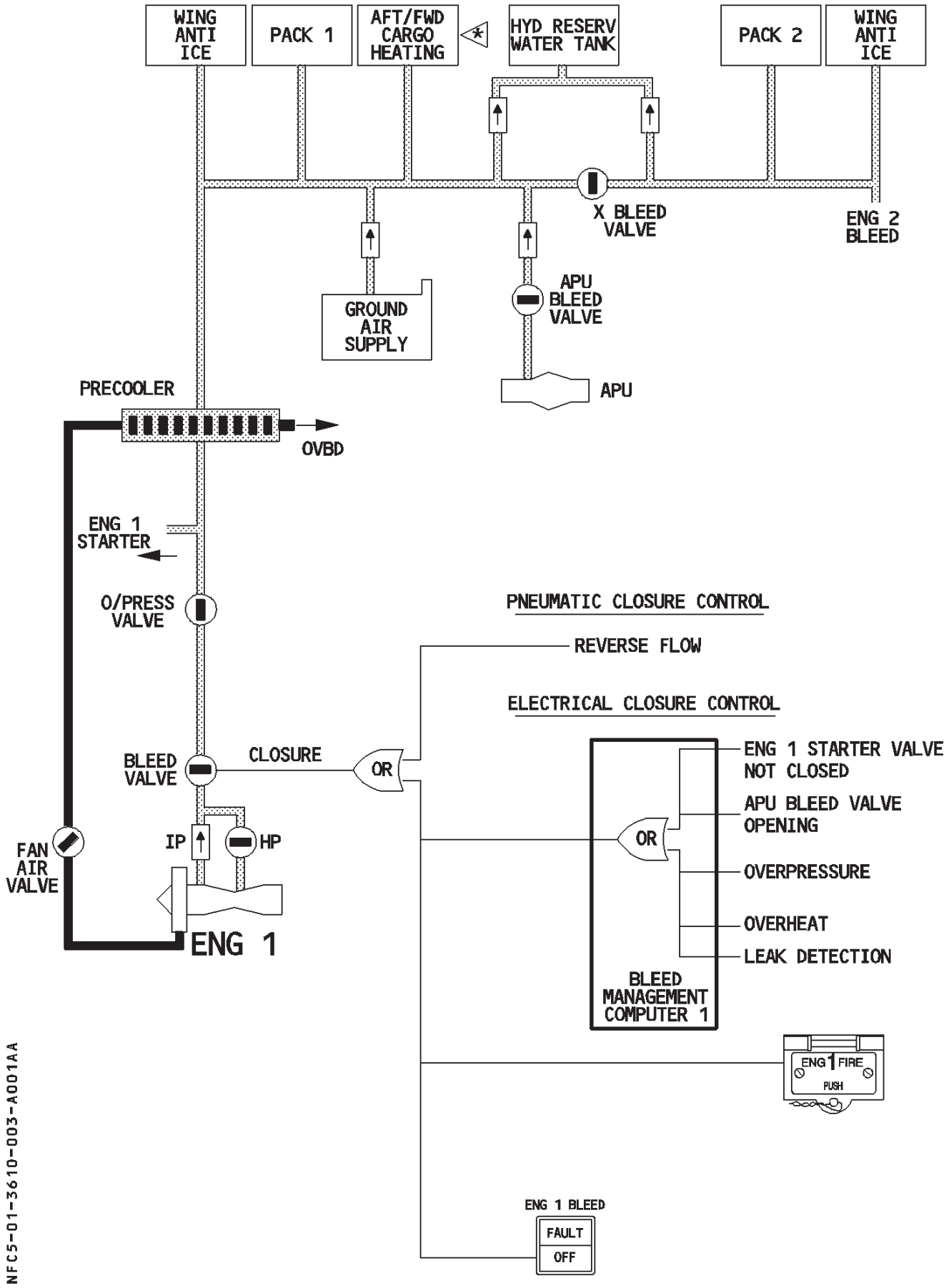
WING ANTI ICE
PACK 1
AFT/FWD CARGO HEATING
HYD RESERV WATER TANK
PACK 2
WING ANTI ICE
X BLEED VALVE
ENG 2 BLEED
GROUND AIR SUPPLY
APU BLEED VALVE
APU
PRECOOLER
OVBD
ENG 1 STARTER
O/PRESS VALVE
PNEUMATIC CLOSURE CONTROL
REVERSE FLOW
ELECTRICAL CLOSURE CONTROL
BLEED VALVE
CLOSURE
OR
ENG 1 STARTER VALVE NOT CLOSED
APU BLEED VALVE OPENING
OR
OVERPRESSURE
OVERHEAT
LEAK DETECTION
BLEED MANAGEMENT COMPUTER 1
FAN AIR VALVE
IP
HP
ENG 1
ENG 1 FIRE
PUSH
ENG 1 BLEED
FAULT
OFF
NFC5-01-3610-003-A001AA

AIR BLEED SELECTION

Air is normally bled from the intermediate pressure stage (IP) of engine's high-pressure (HP) compressor to minimize fuel penalty.
At low engine speed, when the pressure and temperature of the IP air are too low, the system bleeds air from the HP stage and maintains it at 36 ± 4 psi.
An intermediate pressure check valve downstream of the IP port closes to prevent air from the HP stage from being circulated to the IP stage.

FOR INFO

The HP valve closes automatically
- *pneumatically*
  - *in case of low upstream pressure*
  - *in case of excessive upstream pressure*
- *electrically when the bleed valve is closed electrically.*

ECAM INDICATION

NFC5-01-3610-004-A110AA

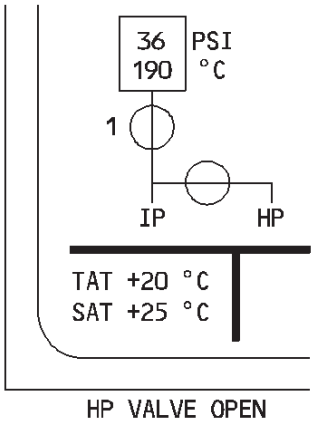

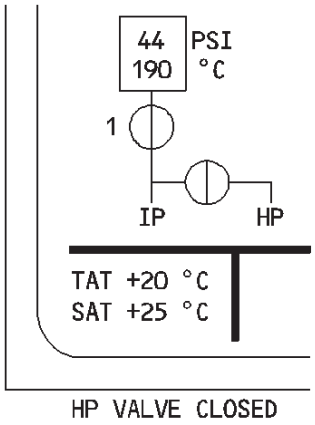

FOR INFO

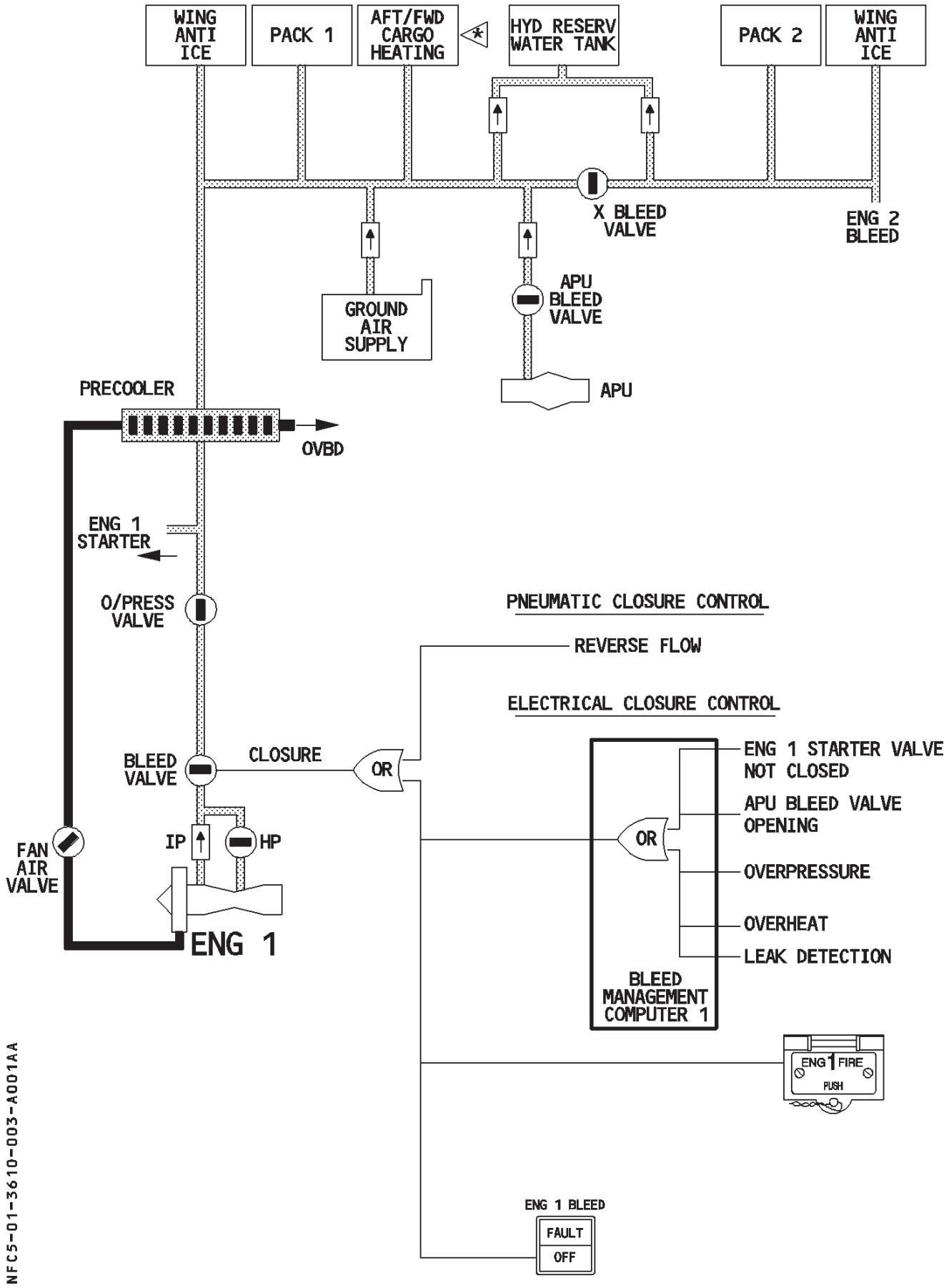
WING ANTI ICE
PACK 1
AFT/FWD CARGO HEATING
HYD RESERV WATER TANK
PACK 2
WING ANTI ICE
X BLEED VALVE
ENG 2 BLEED
GROUND AIR SUPPLY
APU BLEED VALVE
APU
PRECOOLER
OVBD
ENG 1 STARTER
O/PRESS VALVE
PNEUMATIC CLOSURE CONTROL
REVERSE FLOW
ELECTRICAL CLOSURE CONTROL
BLEED VALVE
CLOSURE
OR
ENG 1 STARTER VALVE NOT CLOSED
APU BLEED VALVE OPENING
OR
OVERPRESSURE
OVERHEAT
LEAK DETECTION
BLEED MANAGEMENT COMPUTER 1
FAN AIR VALVE
IP
HP
ENG 1
ENG 1 FIRE
PUSH
ENG 1 BLEED
FAULT
OFF
NFC5-01-3610-003-A001AA

AIR BLEED SELECTION

Air is normally bled from the intermediate pressure stage (IP) of engine's high-pressure (HP) compressor to minimize fuel penalty.
At low engine speed, when the pressure and temperature of the IP air are too low, the system bleeds air from the HP stage and maintains it at 36 ± 4 psi.
An intermediate pressure check valve downstream of the IP port closes to prevent air from the HP stage from being circulated to the IP stage.

FOR INFO

The HP valve closes automatically
- *pneumatically*
  - *in case of low upstream pressure*
  - *in case of excessive upstream pressure*
- *electrically :*
  - *when the bleed valve is closed electrically*
  - *in case of overpressure upstream of the HP valve with wing anti-ice off, two packs on and aircraft altitude above 15000 feet.*

ECAM INDICATION

NFC5-01-3610-004-A160AA

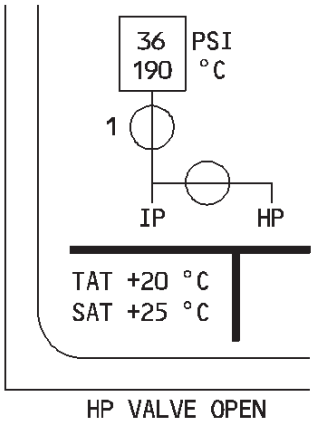

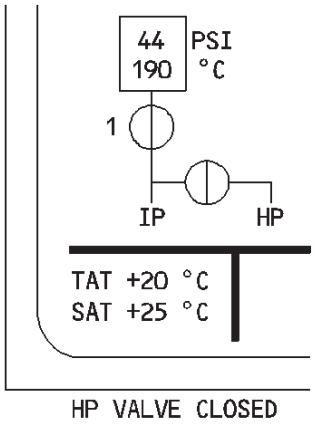

FOR INFO

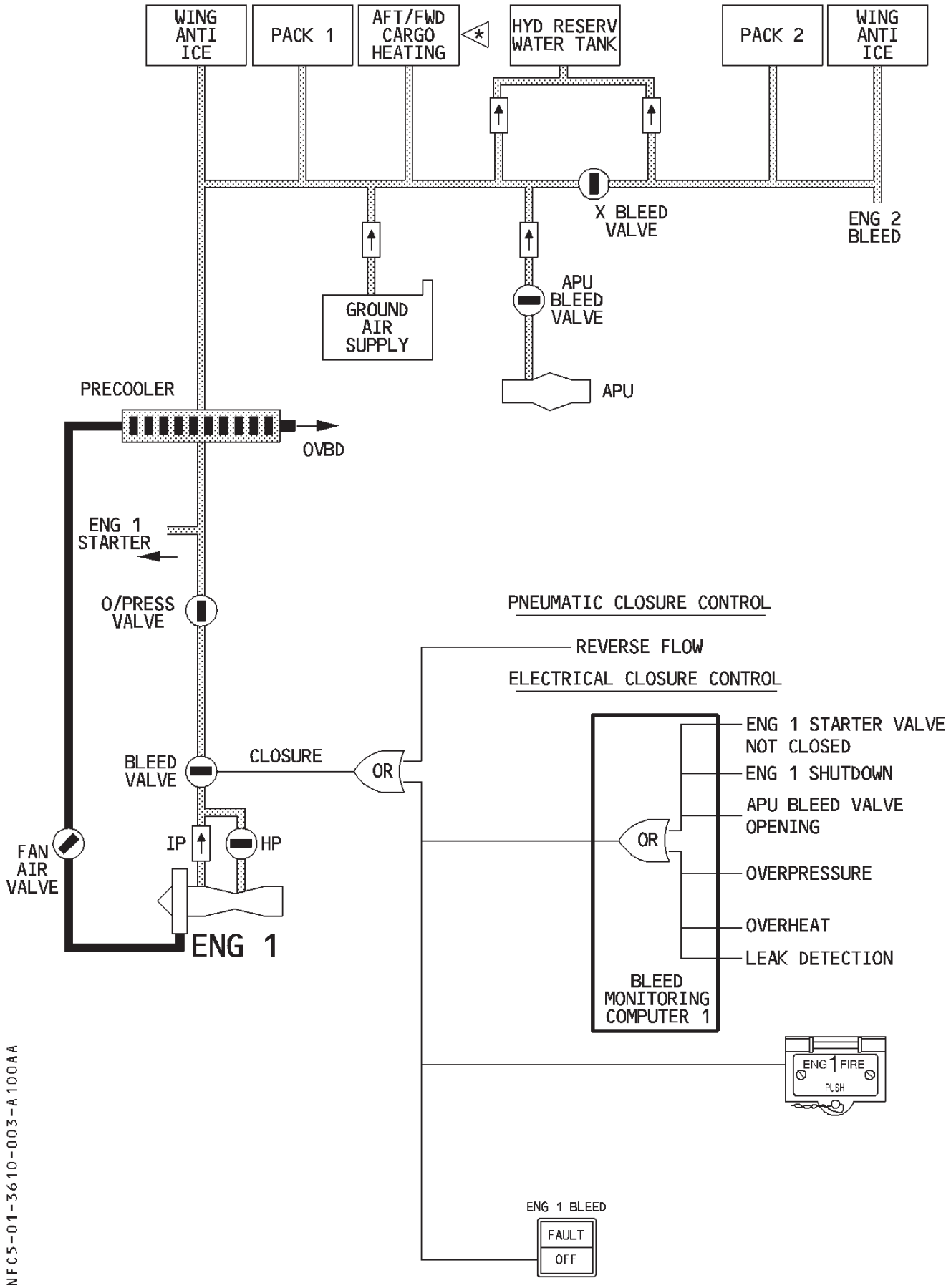
WING ANTI ICE
PACK 1
AFT/FWD CARGO HEATING
HYD RESERV WATER TANK
PACK 2
WING ANTI ICE
X BLEED VALVE
ENG 2 BLEED
GROUND AIR SUPPLY
APU BLEED VALVE
APU
PRECOOLER
OVBD
ENG 1 STARTER
O/PRESS VALVE
PNEUMATIC CLOSURE CONTROL
REVERSE FLOW
ELECTRICAL CLOSURE CONTROL
BLEED VALVE
CLOSURE
OR
ENG 1 STARTER VALVE NOT CLOSED
ENG 1 SHUTDOWN
APU BLEED VALVE OPENING
OR
OVERPRESSURE
OVERHEAT
LEAK DETECTION
BLEED MONITORING COMPUTER 1
FAN AIR VALVE
IP
HP
ENG 1
ENG 1 FIRE
PUSH
ENG 1 BLEED
FAULT
OFF
NFC5-01-3610-003-A100AA

AIR BLEED SELECTION

Air is normally bled from the intermediate pressure stage (IP) of engine's high-pressure (HP) compressor to minimize fuel penalty.
At low engine speed, when the pressure and temperature of the IP air are too low, the system bleeds air from the HP stage and maintains it at 36 ± 4 psi.
An intermediate pressure check valve downstream of the IP port closes to prevent air from the HP stage from being circulated to the IP stage.

FOR INFO

The HP valve closes automatically
- *pneumatically*
  - *in case of low upstream pressure*
  - *in case of excessive upstream pressure*
- *electrically when the bleed valve is closed electrically.*

ECAM INDICATION

NFC5-01-3610-004-A110AA

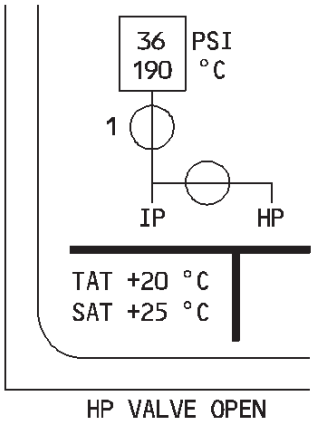

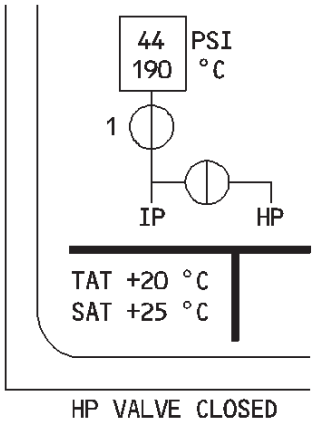

FOR INFO

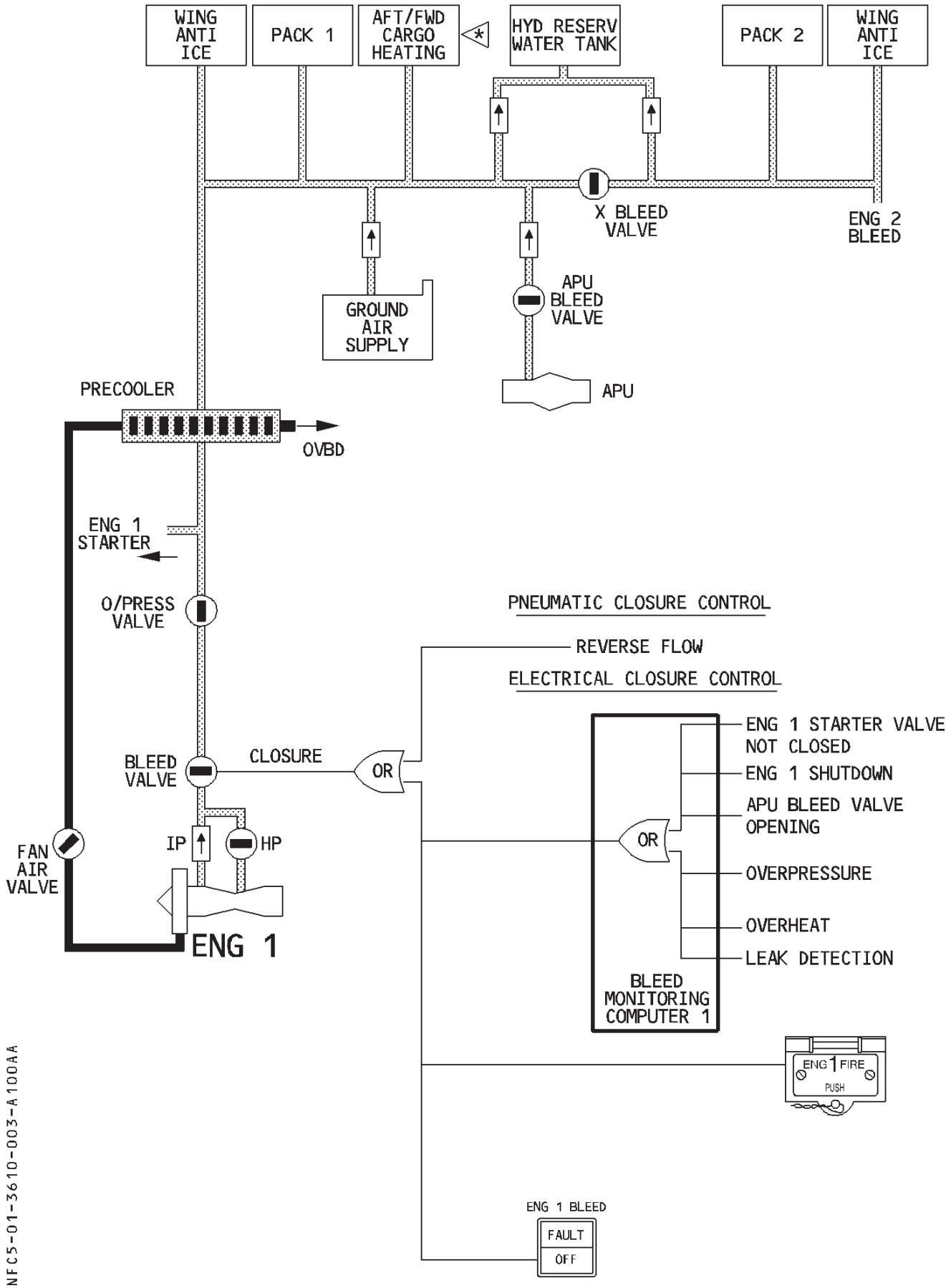
WING ANTI ICE
PACK 1
AFT/FWD CARGO HEATING
HYD RESERV WATER TANK
PACK 2
WING ANTI ICE
X BLEED VALVE
ENG 2 BLEED
GROUND AIR SUPPLY
APU BLEED VALVE
APU
PRECOOLER
OVBD
ENG 1 STARTER
O/PRESS VALVE
PNEUMATIC CLOSURE CONTROL
REVERSE FLOW
ELECTRICAL CLOSURE CONTROL
BLEED VALVE
CLOSURE
OR
ENG 1 STARTER VALVE NOT CLOSED
ENG 1 SHUTDOWN
APU BLEED VALVE OPENING
OR
OVERPRESSURE
OVERHEAT
LEAK DETECTION
BLEED MONITORING COMPUTER 1
FAN AIR VALVE
IP
HP
ENG 1
ENG 1 FIRE
PUSH
ENG 1 BLEED
FAULT
OFF
NFC5-01-3610-003-A100AA

AIR BLEED SELECTION

Air is normally bled from the intermediate pressure stage (IP) of engine's high-pressure (HP) compressor to minimize fuel penalty.
At low engine speed, when the pressure and temperature of the IP air are too low, the system bleeds air from the HP stage and maintains it at 36 ± 4 psi.
An intermediate pressure check valve downstream of the IP port closes to prevent air from the HP stage from being circulated to the IP stage.

FOR INFO

The HP valve closes automatically
- *pneumatically*
  - *in case of low upstream pressure*
  - *in case of excessive upstream pressure*
- *electrically :*
  - *when the bleed valve is closed electrically*
  - *in case of overpressure upstream of the HP valve with wing anti-ice off, two packs on and aircraft altitude above 15000 feet.*

ECAM INDICATION

NFC5-01-3610-004-A160AA

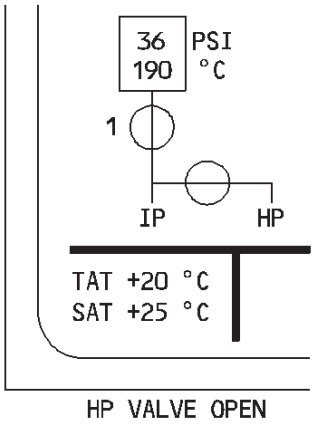

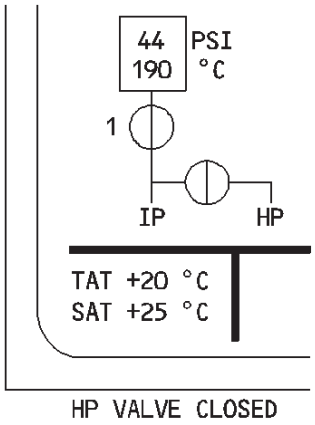

PRESSURE REGULATION AND LIMITATION

The bleed valve, which is downstream of the junction of HP and IP ducting, acts as a shut-off and pressure regulating valve.
It maintains delivery pressure at 45 ± 5 psi.

Note : Bleed pressure may fluctuate between 38 and 56 psi (with a maximum peak to peak pressure of 16 psi) particularly at high engine power (takeoff or climb) up to FL100.

The bleed valve is fully closed :
- pneumatically :
  - if upstream pressure goes below 8 psi
  - if there is return flow
- electrically by means of
  - the BLEED pushbutton switch (switched OFF)
  - the ENG FIRE pushbutton (pushed)
  - the Bleed air Monitoring Computer (BMC) in the following cases :
    - overtemperature
    - overpressure
    - leak
    - open starter valve
    - APU bleed being ON.

If pressure regulation fails, the overpressure valve closes when the pressure goes over 85 psi.

R *Note : If APU Bleed is ON and the crossbleed valve is SHUT, the Engine bleed valve 2, remains open.*

TEMPERATURE REGULATION AND LIMITATION

A precooler downstream of the bleed valve regulates the temperature of the bleed air.
The precooler is an air-to-air heat exchanger that uses cooling air bleed from the engine fan to regulate the temperature to approximately 200° C.
The fan air valve controls fan air flow.
A spring keeps the fan air valve closed in the absence of pressure.

APU BLEED AIR SUPPLY

Air from the APU load compressor is available on the ground and in flight.
The APU bleed valve operates as a shut-off valve to control APU bleed air. It is electrically controlled and pneumatically operated.
The APU BLEED pushbutton switch on the AIR COND panel controls the APU bleed valve. When the flight crew selects ON with the pushbutton, APU bleed air supplies the pneumatic system if the APU speed is above 95 %. This opens the crossbleed valve and closes the engine bleed automatically.
A check valve near the crossbleed duct protects the APU when bleed air comes from another source.

APU BLEED VALVE OPENING LOGIC

FOR INFO

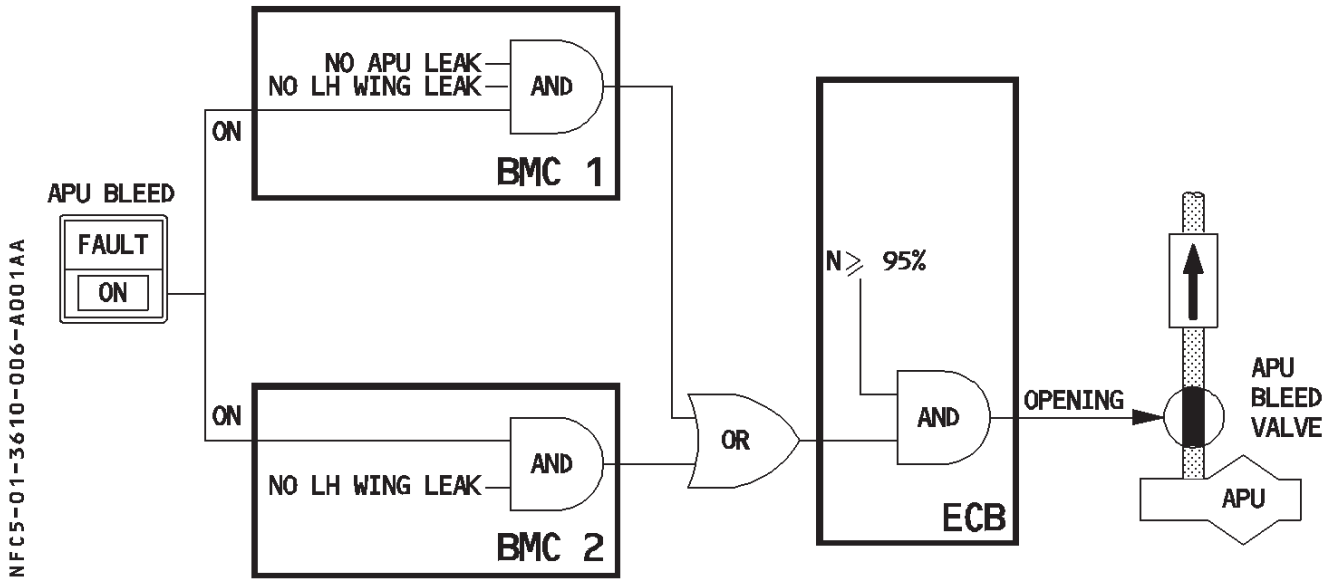

Note : 1. Leak detection are disregarded during an engine start.
2. APU leak detection is lost if BMC1 is lost.

PRESSURE REGULATION AND LIMITATION

The bleed valve, which is downstream of the junction of HP and IP ducting, acts as a shut-off and pressure regulating valve.
It maintains delivery pressure at 45 ± 5 psi.

Note : Bleed pressure may fluctuate between 38 and 56 psi (with a maximum peak to peak pressure of 16 psi) particularly at high engine power (takeoff or climb) up to FL100.

The bleed valve is fully closed :
- pneumatically :
  - if upstream pressure goes below 8 psi
  - if there is return flow
- electrically by means of
  - the BLEED pushbutton switch (switched OFF)
  - the ENG FIRE pushbutton (pushed)
  - the Bleed air Monitoring Computer (BMC) in the following cases :
    - overtemperature
    - overpressure
    - leak
    - open starter valve
    - APU bleed being ON.

If pressure regulation fails, the overpressure valve closes when the pressure goes over 85 psi.

R *Note : If APU Bleed is ON and the crossbleed valve is SHUT, the Engine bleed valve 2, remains open.*

TEMPERATURE REGULATION AND LIMITATION

A precooler downstream of the bleed valve regulates the temperature of the bleed air.
The precooler is an air-to-air heat exchanger that uses cooling air bleed from the engine fan to regulate the temperature to approximately 200° C.
The fan air valve controls fan air flow.
A spring keeps the fan air valve closed in the absence of pressure.

APU BLEED AIR SUPPLY

Air from the APU load compressor is available on ground and in flight.
The APU bleed valve operates as a shut-off valve to control APU bleed air. It is electrically-controlled and operated by fuel pressure.
The APU BLEED pushbutton, on the AIR COND panel, controls the APU bleed valve.
When the flight crew selects ON with the pushbutton, APU bleed air supplies the pneumatic system, if the APU speed is above 95 %. This opens the crossbleed valve and closes the engine bleed automatically.
A check valve near the crossbleed duct protects the APU, when bleed air comes from another source.

APU BLEED VALVE OPENING LOGIC

FOR INFO

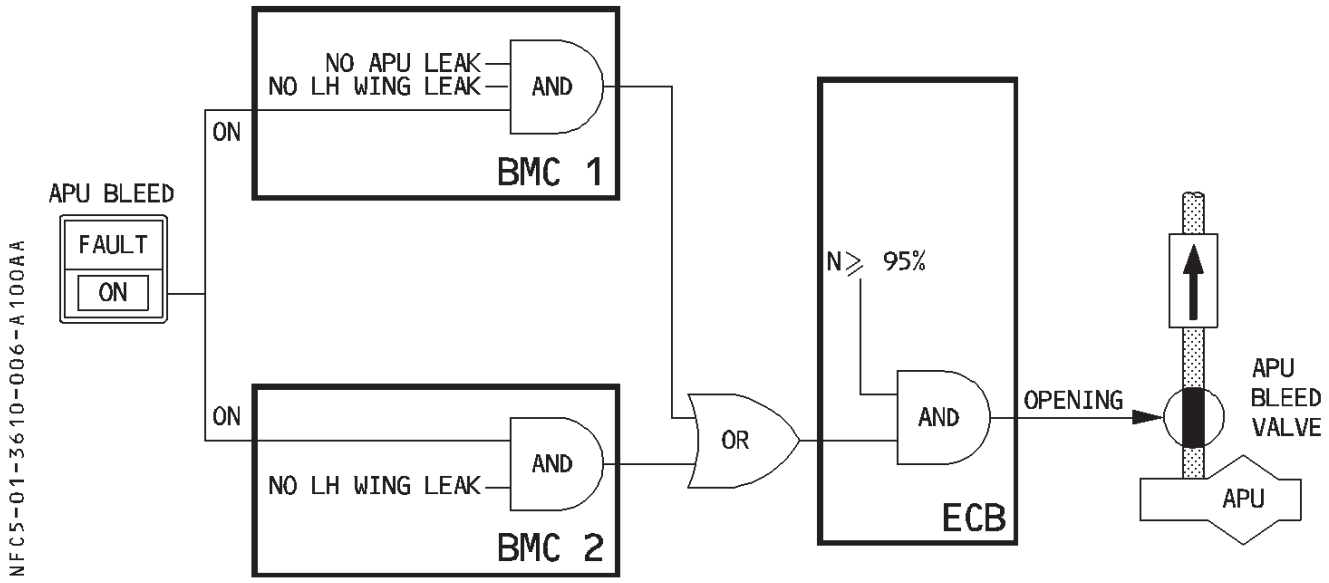

Note : 1. Leak detection is disregarded during an engine start.
2. APU leak detection is lost, if BMC1 is lost.

CROSSBLEED

A crossbleed valve on the crossbleed duct allows the air supply systems of the two engines to be isolated or interconnected.
A rotary selector on the AIR COND panel controls the crossbleed valve electrically.
Two electric motors, one for automatic mode and one for manual mode, control the valve.
In automatic mode the crossbleed valve opens when the system is using APU bleed air. It closes if the system detects an air leak (except during engine start).

X-BLEED VALVE CONTROL LOGIC

FOR INFO

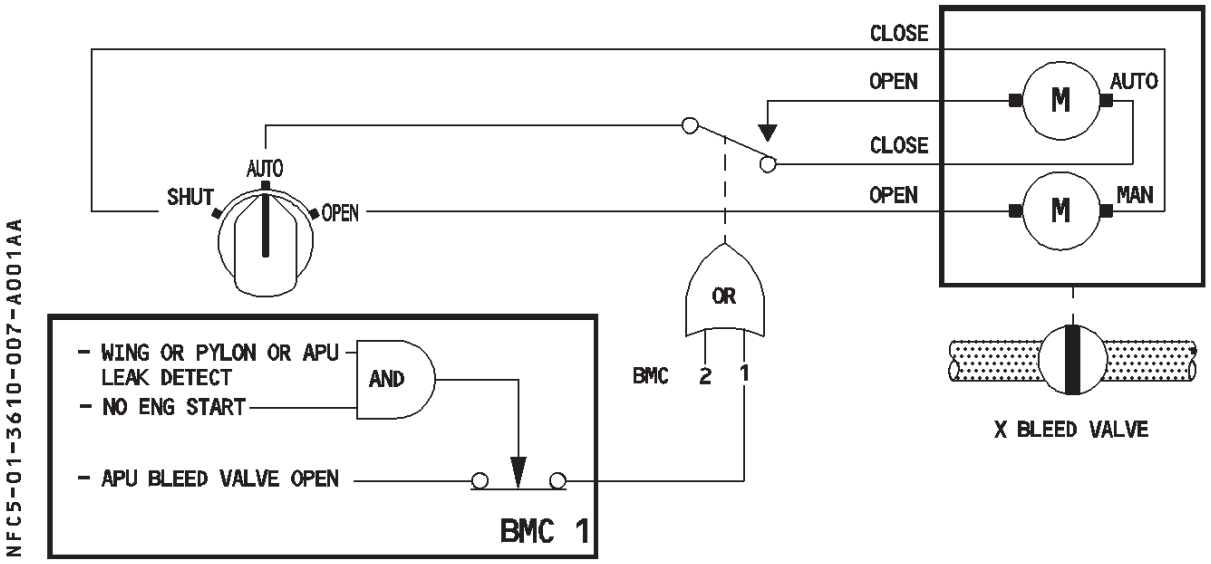

ECAM INDICATION

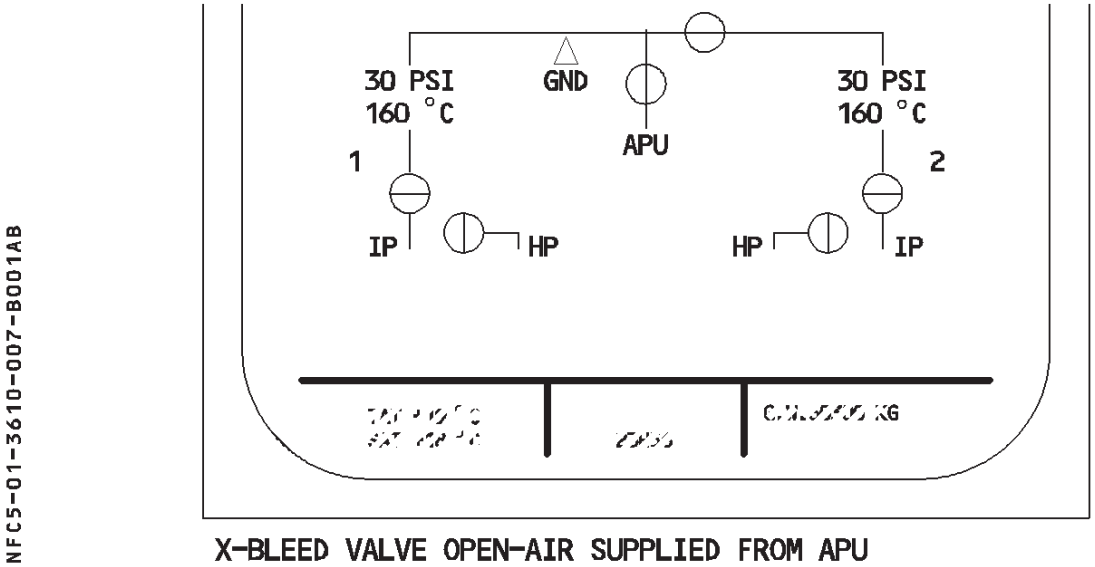

X-BLEED VALVE OPEN-AIR SUPPLIED FROM APU

LEAK DETECTION

Leak detection loops detect any overheating near the hot air ducts in the fuselage, pylons, and wings.
For the pylon and APU, the sensing elements are tied to form a single loop and for the wing, a double loop.
When the two wing loops detect a leak, or when one loop detects the leak and the other one is inoperative, they activate a wing leak signal.
BMC1 and BMC2 each contain identical control logic for the system.

- A wing leak signal causes :
  - the bleed valve on the related side to close automatically
  - the associated FAULT light on the AIR COND panel to come on
  - the x-bleed valve to close automatically (except during an engine start)
  - the APU bleed valve to close automatically (if it is open, and if the leak concerns the left wing) (except during engine start)
- A pylon leak signal causes :
  - the bleed valve on the related side to close automatically
  - the FAULT light for the related engine on the AIR COND panel to come on
  - the x-bleed valve to close automatically (except during an engine start).
- An APU leak signal causes :
  - the APU bleed valve to close automatically (except during engine start).
  - the FAULT light the APU BLEED pushbutton switch on the AIR COND panel to come on
  - the x-bleed valve to close automatically (except during an engine start).

CROSSBLEED

A crossbleed valve on the crossbleed duct allows the air supply systems of the two engines to be isolated or interconnected.
On the AIR COND panel, a rotary selector controls the crossbleed valve electrically.
Two electric motors, one for automatic mode and one for manual mode, control the valve.
In automatic mode, the crossbleed valve opens when the system uses APU bleed air. It closes, if the system detects an air leak (except during engine start).

X-BLEED VALVE CONTROL LOGIC

FOR INFO

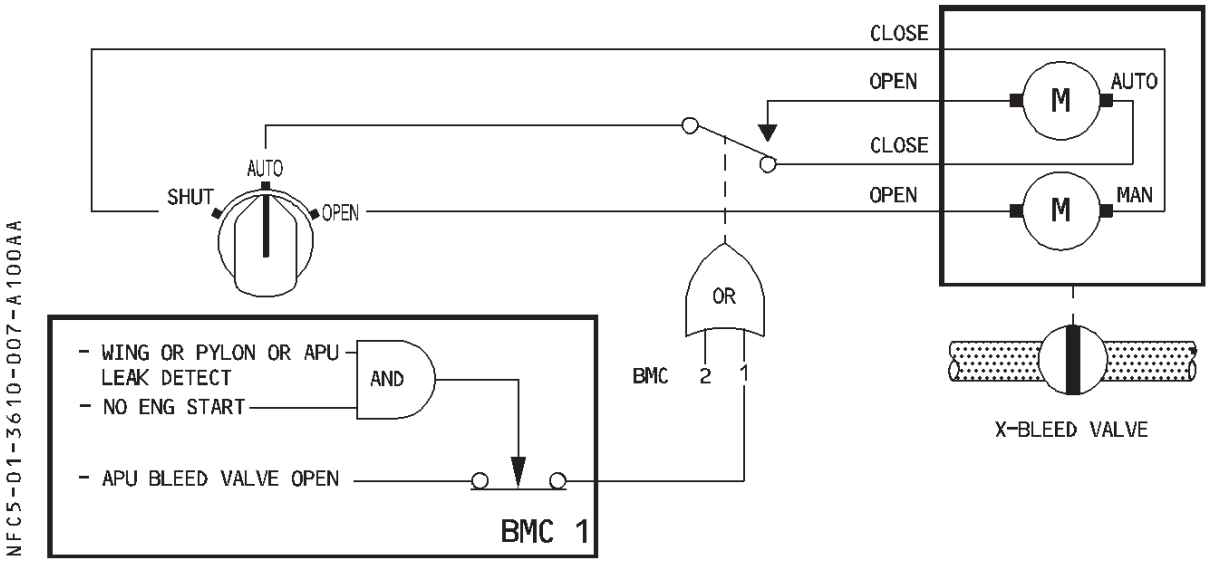

ECAM INDICATION

R

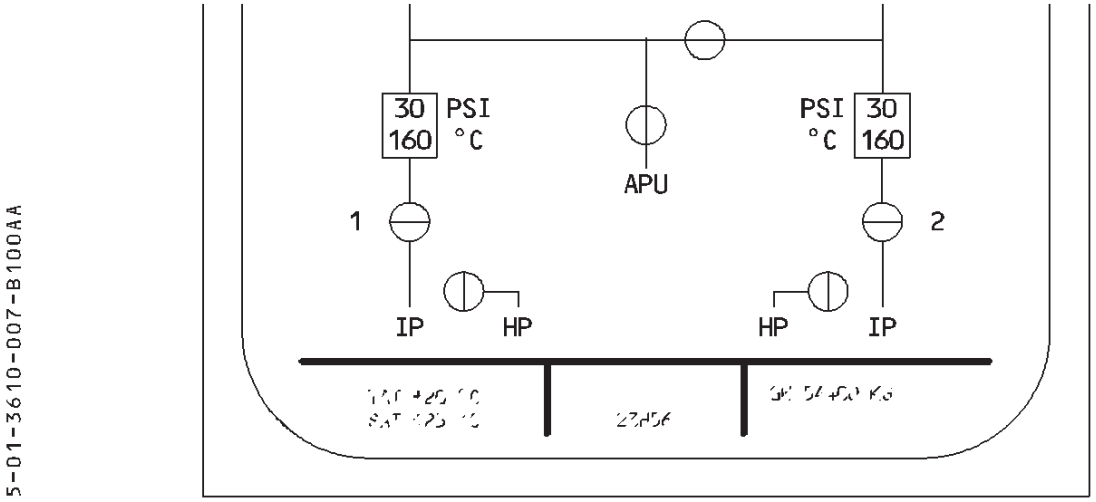

X-BLEED VALVE OPEN.AIR SUPPLIED FROM APU

LEAK DETECTION

Leak detection loops detect any overheating near the hot air ducts in the fuselage, pylons, and wings.
For the pylon and APU, the sensing elements are tied to form a single loop and for the wing, a double loop.
When the two wing loops detect a leak, or when one loop detects the leak and the other one is inoperative, they activate a wing leak signal.
BMC1 and BMC2 each contain identical control logic for the system.

- A wing leak signal causes :
  - the bleed valve on the related side to close automatically
  - the associated FAULT light on the AIR COND panel to come on
  - the x-bleed valve to close automatically (except during an engine start)
  - the APU bleed valve to close automatically (if it is open, and if the leak concerns the left wing) (except during engine start)
- A pylon leak signal causes :
  - the bleed valve on the related side to close automatically
  - the FAULT light for the related engine on the AIR COND panel to come on
  - the x-bleed valve to close automatically (except during an engine start).
- An APU leak signal causes :
  - the APU bleed valve to close automatically (except during engine start).
  - the FAULT light the APU BLEED pushbutton switch on the AIR COND panel to come on
  - the x-bleed valve to close automatically (except during an engine start).

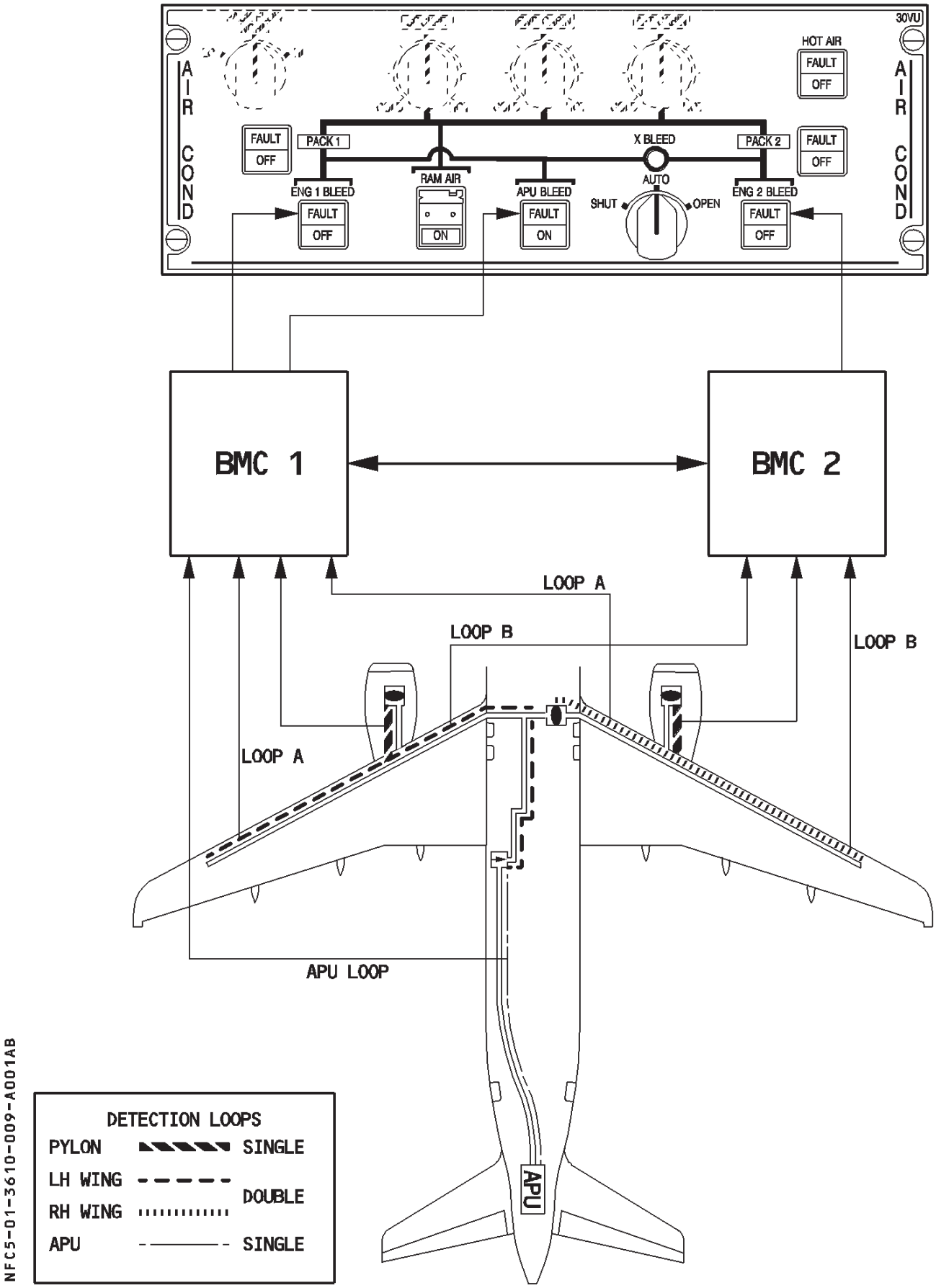
30VU
AIR COND
HOT AIR
FAULT
OFF
PACK 1
X BLEED
PACK 2
RAM AIR
ENG 1 BLEED
APU BLEED
AUTO
SHUT
OPEN
ENG 2 BLEED
ON
BMC 1
BMC 2
LOOP A
LOOP B
APU LOOP
APU
DETECTION LOOPS
PYLON
SINGLE
LH WING
RH WING
DOUBLE
APU
NFC5-01-3610-009-A001AB

OPERATION FOLLOWING FAILURES

BMC FAILURE

If one BMC fails, the adjacent BMC takes over the monitoring of the bleed system to issue the following ECAM warnings if necessary :
- overpressure
- overtemperature
- wing leak.

Nevertheless, the associated FAULT light on the AIR COND panel is lost, and the associated bleed valve does not close automatically.
ENG BLEED LEAK warning is lost for the associated engine, as is also the APU BLEED LEAK warning if BMC1 has failed.

OVERHEAD PANEL

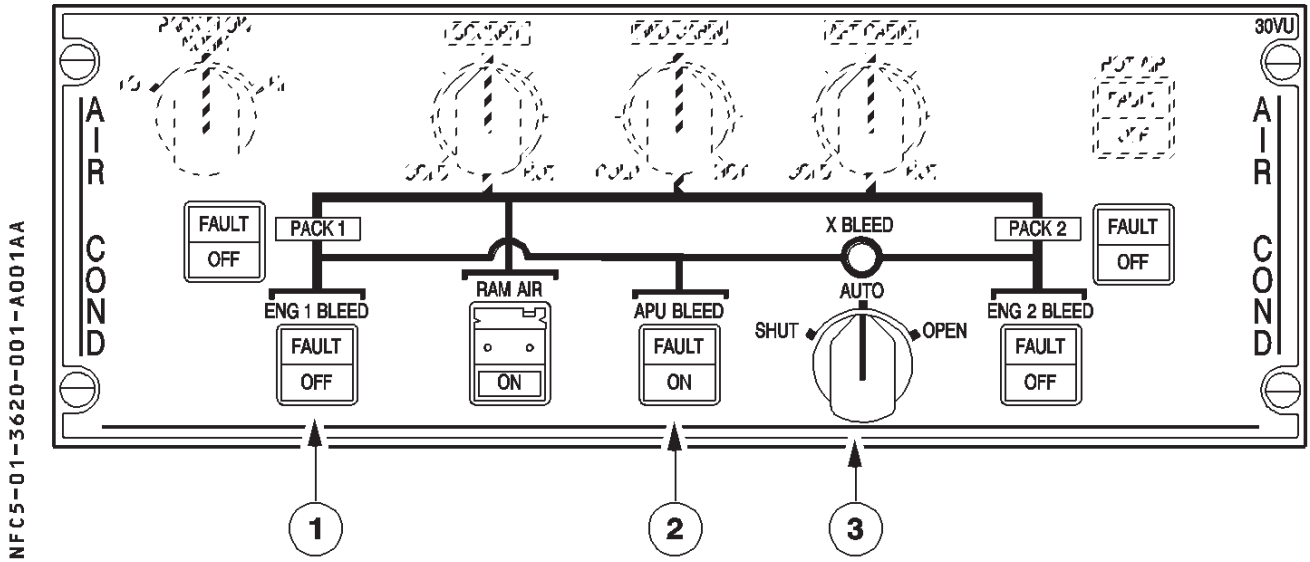

(1) ENG 1 and ENG 2 BLEED pb sw

On : Bleed valve opens if :
- Upstream pressure is above 8 psi.
- APU BLEED pushbutton switch is off or APU bleed valve is closed.
- There is no onside wing or pylon leak, and no overpressure or overtemperature has been detected.
- The ENG FIRE pushbutton has not been popped out.
- The engine start valve is closed.

FAULT lt : This amber light comes on, and an ECAM caution appears, if :
- There is an overpressure downstream of the bleed valve.
- There is a bleed air overheat.
- There is a wing or engine leak on the related side.
- The bleed valve is not closed during engine start.
- The bleed valve is not closed with APU bleed ON.

It goes out when the ENG BLEED pushbutton switch is OFF if the fault has disappeared.

OFF : The bleed valve and HP valve close. The white OFF light comes on.

(2) APU BLEED pb sw

ON : The APU valve opens if N > 95 % and there is no leak in the APU or in the left side bleed. (If there is a leak on the right side, the x-bleed valve closes.)
The blue ON light comes on.

Off : The APU valve closes.

FAULT light : This amber light comes on, and an ECAM caution appears, when the system detects an APU leak.

③ X-BLEED selector sw

AUTO : The crossbleed valve is open if the APU bleed valve is open.
The crossbleed valve is closed if the APU bleed valve is closed or, in case of a wing, pylon, or APU leak (except during engine start).
OPEN : The crossbleed valve is open.
CLOSE : The crossbleed valve is closed.

ECAM BLEED PAGE

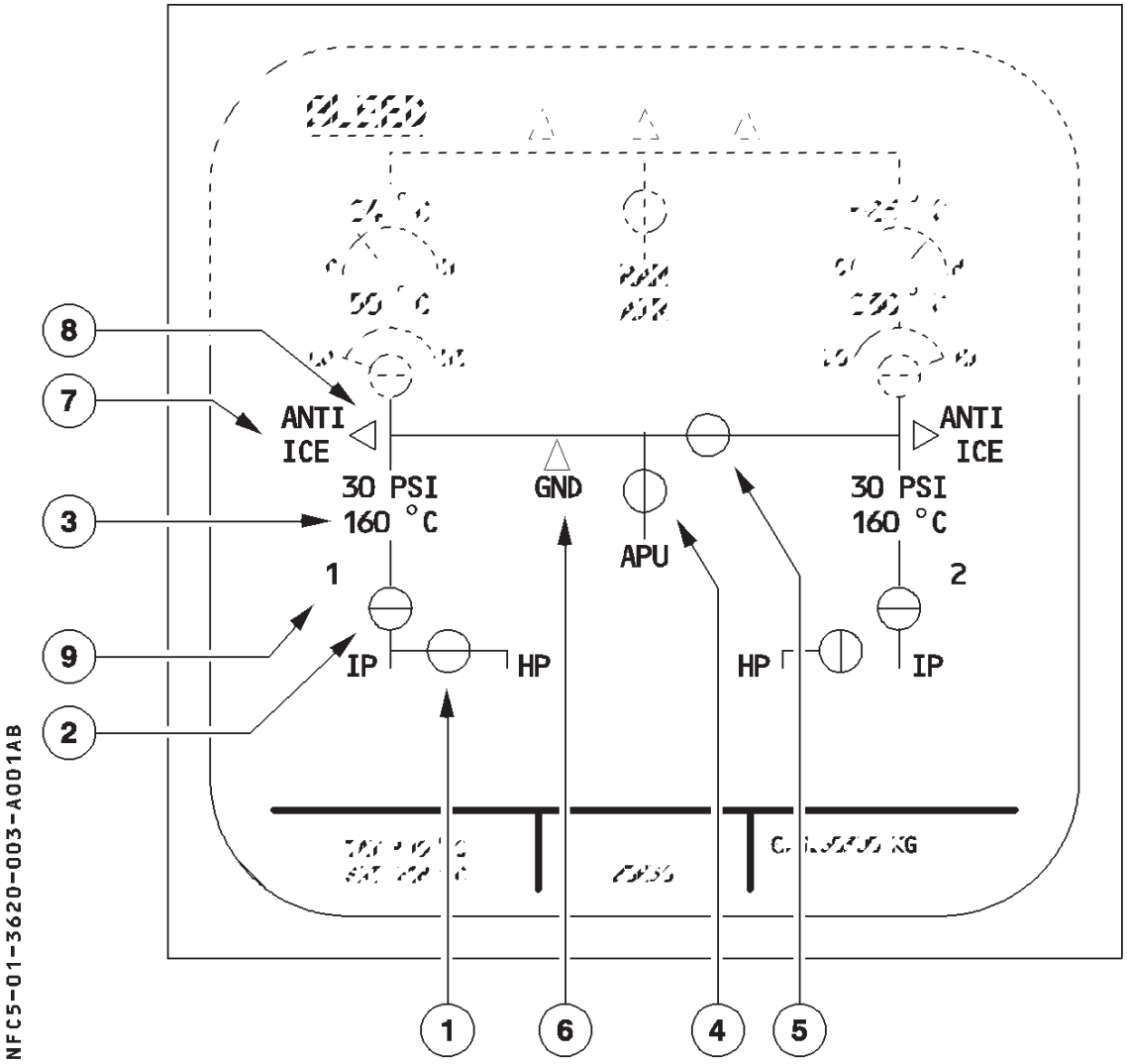

① HP VALVES

⦶ green : HP valve normally fully closed
⊖ green : HP valve not fully closed
⦶ amber : HP valve not in commanded (closed) position

② ENGINE BLEED VALVES

⦶ green : BLEED valve normally open
⊖ green : BLEED valve normally fully closed
⦶ amber : BLEED valve not in commanded (open) position
⊖ amber : BLEED valve not in commanded (closed) position

(3) ENGINE BLEED INDICATIONS

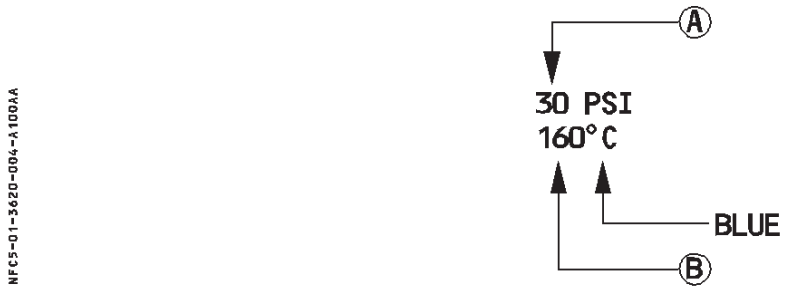

(A) Precooler inlet pressure
It is normally in green.
It becomes amber, if under 4 psi, or if overpressure is detected by the BMC (threshold between 57 and 60 psi).

(B) Precooler outlet temperature
It is normally in green.
It becomes amber, if the BMC detects an overheat or low temperature.
Overheat : Temperature exceeds :
– 290° C for more than 5 seconds, or
– 270° C for more than 15 seconds, or
– 257° C for more than 55 seconds
Low temperature is detected, if the temperature is lower than 150° C.

R *Note : When the engines are at idle, and depending on the ambient temperature, the precooler outlet temperature may be below 150° C.*

(4) APU BLEED VALVE

	Crossline	– Green	: The APU valve is not fully open, and the APU master switch is ON.
	In line	– Green	: The APU valve is fully open, and the APU master switch is ON.
R	Crossline	– Amber	: The APU valve is fully closed, the APU master switch is ON,
R			and the APU bleed switch is ON for more than 10 seconds.

(5) CROSSBLEED VALVE

Crossline	– Green	: The crossbleed valve is normally closed.
In line	– Green	: The crossbleed valve is normally open.
Crossline	– Amber	: The crossbleed valve is not in the commanded (closed) position.
In line	– Amber	: The crossbleed valve is not in the commanded (open) position.
Transit	– Amber	: The crossbleed valve is in transit.

ECAM BLEED PAGE

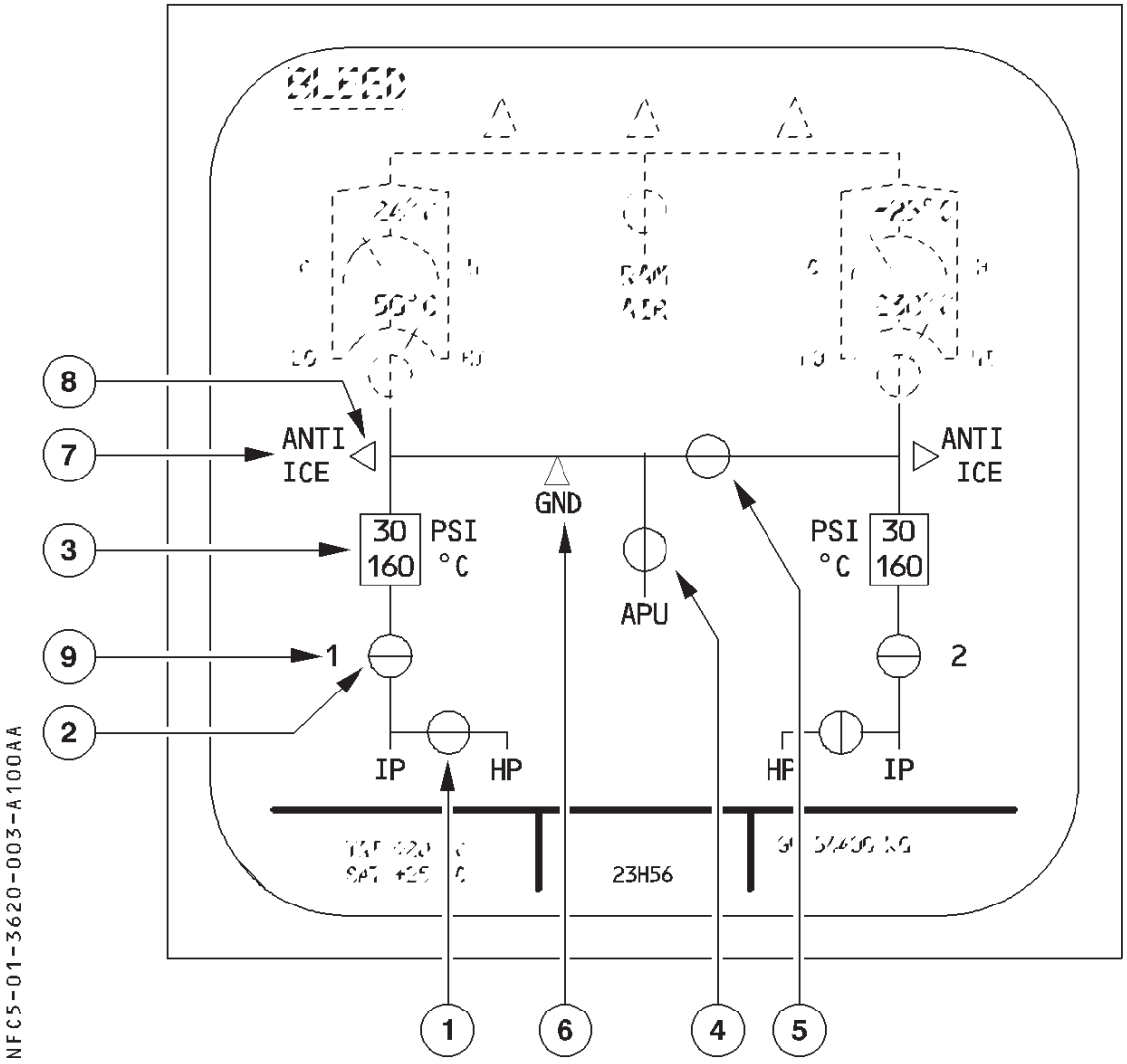

① HP VALVES

Cross line - green : HP valve normally fully closed
In line - green : HP valve not fully closed
Cross line - amber : HP valve not in commanded (closed) position

② ENGINE BLEED VALVES

In line - green : BLEED valve normally open
Cross line - green : BLEED valve normally fully closed
In line - amber : BLEED valve not in commanded (open) position
Cross line - amber : BLEED valve not in commanded (closed) position

(3) ENGINE BLEED INDICATIONS

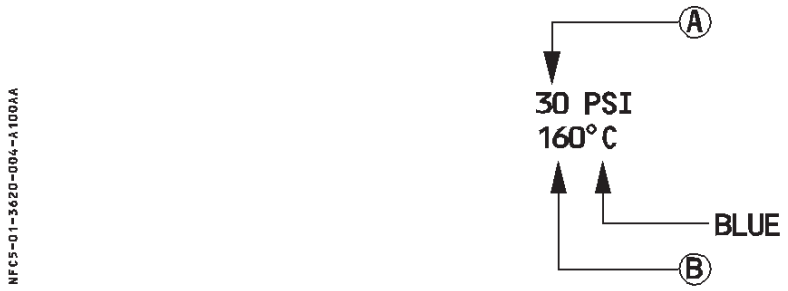

(A) Precooler inlet pressure
It is normally in green.
It becomes amber, if under 4 psi, or if overpressure is detected by the BMC (threshold between 57 and 60 psi).

(B) Precooler outlet temperature
It is normally in green.
It becomes amber, if the BMC detects an overheat or low temperature.
Overheat : Temperature exceeds :
– 290° C for more than 5 seconds, or
– 270° C for more than 15 seconds, or
– 257° C for more than 55 seconds
Low temperature is detected, if the temperature is lower than 150° C.

R *Note : When the engines are at idle, and depending on the ambient temperature, the precooler outlet temperature may be below 150° C.*

(4) APU BLEED VALVE

	Crossline	– Green	: The APU valve is not fully open, and the APU master switch is ON.
	In line	– Green	: The APU valve is fully open, and the APU master switch is ON.
R	Crossline	– Amber	: The APU valve is fully closed, the APU master switch is ON,
R			and the APU bleed switch is ON for more than 10 seconds.

(5) CROSSBLEED VALVE

Crossline	– Green	: The crossbleed valve is normally closed.
In line	– Green	: The crossbleed valve is normally open.
Crossline	– Amber	: The crossbleed valve is not in the commanded (closed) position.
In line	– Amber	: The crossbleed valve is not in the commanded (open) position.
Transit	– Amber	: The crossbleed valve is in transit.

⑥ GND HP ground connection indication

△ GND : On ground, it is displayed in green.

⑦ ANTI ICE indication

It is displayed in white, when the WING pushbutton on the ANTI-ICE panel is ON.

⑧ Arrow

◁– : – It is normally not displayed, when the corresponding valve is closed.
– It is normally displayed in green, when the corresponding valve is open.
– It becomes amber, when the
· Valve is open and air pressure is low or high, or
· Valve is open on ground for more than 10 seconds.

⑨ Engine identification (1-2)

It is normally in white.
It becomes amber, when engine N2 is below idle.

WARNINGS AND CAUTIONS

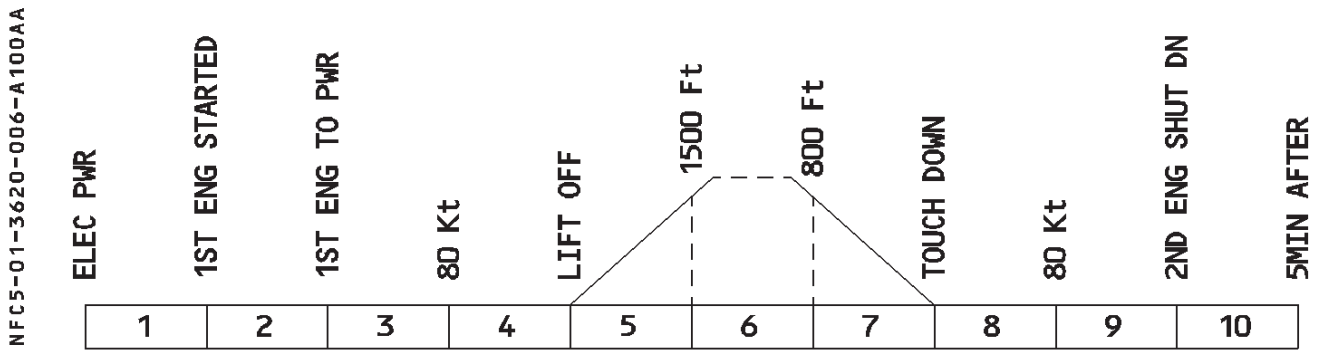

E / WD : FAILURE TITLE conditions	AURAL WARNING	MASTER LIGHT	SD PAGE CALLED	LOCAL WARNING	FLT PHASE INHIB
ENG 1 (2) BLEED FAULT engine 1 (2) running and bleed air pressure > 57 psig (+ 3/– 0) or temperature : > 257°C for more than 55 sec or > 270°C for more than 15 sec or > 290°C for more than 5 sec	SINGLE CHIME	MASTER CAUT	BLEED	ENG BLEED FAULT lt	1, 3, 4, 5, 7, 8, 10
L (R) WING LEAK temperature > 124°C detected by the loops					3, 4, 5, 7, 8
ENG 1 (2) BLEED LEAK temperature > 204°C detected by the loop and engine 1 (2) running					
ENG 1 (2) BLEED NOT CLSD bleed valve not automatically closed during engine start or with APU bleed selected					
BLEED 1 (2) OFF one engine bleed switched off with no fault				ENG BLEED OFF lt	1, 3, 4, 5, 7, 8, 9, 10
APU BLEED FAULT APU available and APU bleed valve position disagrees with selected position.				NIL	3, 4, 5, 7, 8
APU BLEED LEAK temperature > 124°C detected by the loop				APU BLEED FAULT lt	
ENG 1 (2) BLEED ABNORM PR regulated pressure is abnormal				NIL	1, 3, 4, 5, 7, 8, 10

⑥ GND HP ground connection indication

△ GND : displayed in white when the aircraft is on ground.

⑦ ANTI ICE indication

It is displayed in white, when the WING pushbutton on the ANTI-ICE panel is ON.

⑧ Arrow

◁– : – It is normally not displayed, when the corresponding valve is closed.
– It is normally displayed in green, when the corresponding valve is open.
– It becomes amber, when the
· Valve is open and air pressure is low or high, or
· Valve is open on ground for more than 10 seconds.

⑨ Engine identification (1-2)

It is normally in white.
It becomes amber, when engine N2 is below idle.

WARNINGS AND CAUTIONS

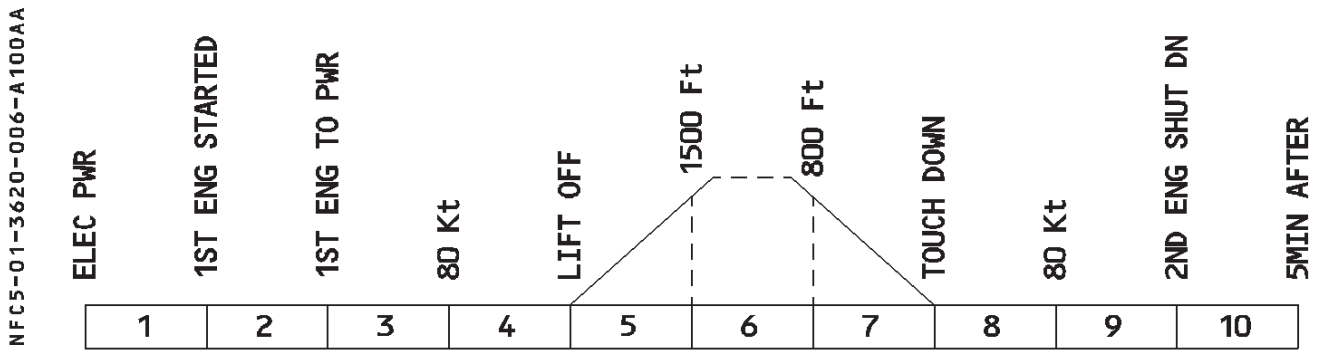

E / WD : FAILURE TITLE conditions	AURAL WARNING	MASTER LIGHT	SD PAGE CALLED	LOCAL WARNING	FLT PHASE INHIB
ENG 1 (2) BLEED FAULT engine 1 (2) running and bleed air pressure > 57 psig (+ 3/– 0) or temperature : > 257°C for more than 55 sec or > 270°C for more than 15 sec or > 290°C for more than 5 sec	SINGLE CHIME	MASTER CAUT	BLEED	ENG BLEED FAULT lt	1, 3, 4, 5, 7, 8, 10
L (R) WING LEAK temperature > 124°C detected by the loops					3, 4, 5, 7, 8
ENG 1 (2) BLEED LEAK temperature > 204°C detected by the loop and engine 1 (2) running					
ENG 1 (2) BLEED NOT CLSD bleed valve not automatically closed during engine start or with APU bleed selected					
BLEED 1 (2) OFF one engine bleed switched off with no fault				ENG BLEED OFF lt	1, 3, 4, 5, 7, 8, 9, 10
APU BLEED FAULT APU available and APU bleed valve position disagrees with selected position.				NIL	3, 4, 5, 7, 8
APU BLEED LEAK temperature > 124°C detected by the loop				APU BLEED FAULT lt	
ENG 1 (2) BLEED ABNORM PR regulated pressure is abnormal				NIL	1, 3, 4, 5, 7, 8, 10

E / WD : FAILURE TITLE conditions	AURAL WARNING	MASTER LIGHT	SD PAGE CALLED	LOCAL WARNING	FLT PHASE INHIB
ENG 1 (2) (1+2) BLEED LO TEMP one (both) engine bleed below 150°C in flight with wing anti ice ON	SINGLE CHIME	MASTER CAUT	BLEED	NIL	3, 4, 5, 8
X BLEED FAULT position disagree with selected position					3, 4, 5, 7, 8
ENG 1 (2) HP VALVE FAULT HP valve is abnormally closed	NIL	NIL			
BLEED MONITORING FAULT Both BMC faulty					
L(R) WING LEAK DET FAULT Both detection loops inop in one wing					

MEMO DISPLAY

APU BLEED appears in green if the APU is available and the APU BLEED pushbutton switch is ON.

E / WD : FAILURE TITLE conditions	AURAL WARNING	MASTER LIGHT	SD PAGE CALLED	LOCAL WARNING	FLT PHASE INHIB
ENG 1 (2) (1+2) BLEED LO TEMP one (both) engine bleed below 150°C in flight with wing anti ice ON	SINGLE CHIME	MASTER CAUT	BLEED	NIL	3, 4, 5, 8
X BLEED FAULT position disagree with selected position					3, 4, 5, 7, 8
ENG 1 (2) HP VALVE FAULT HP valve is abnormally closed	NIL	NIL			
BLEED MONITORING FAULT Both BMC faulty					
L(R) WING LEAK DET FAULT Both detection loops inop in one wing					
BLEED MONIT SYS 1(2) FAULT One BMC faulty			NIL		3, 4, 5, 6, 7, 8
ENG 1(2) LEAK DET FAULT Detection loop inop in pylon					

MEMO DISPLAY

APU BLEED appears in green if the APU is available and the APU BLEED pushbutton switch is ON.

BUS EQUIPMENT LIST

		NORM		EMER ELEC		
		AC	DC	AC ESS	DC ESS	HOT
BMC	1				SHED	
	2		DC2			
BLEED VALVES, HP VALVES AND FAN AIR VALVES	ENG 1				SHED	
	ENG 2		DC2			
X-BLEED VALVE	AUTO CONTROL		DC2			
	MANUAL CONTROL				SHED	