## USB-C

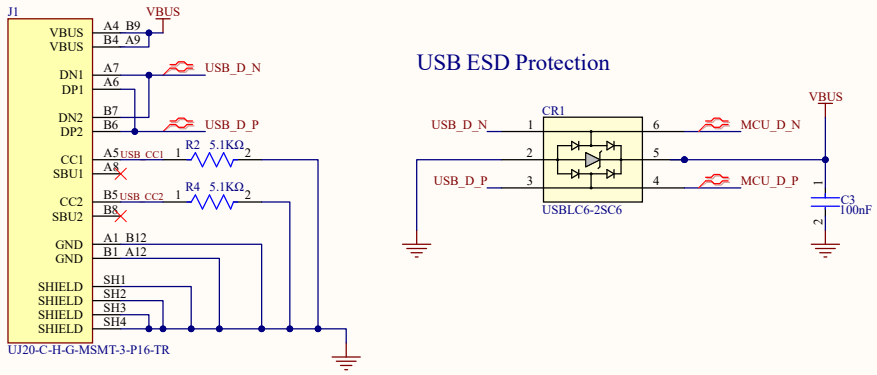


## Battery Management + Power Pathing

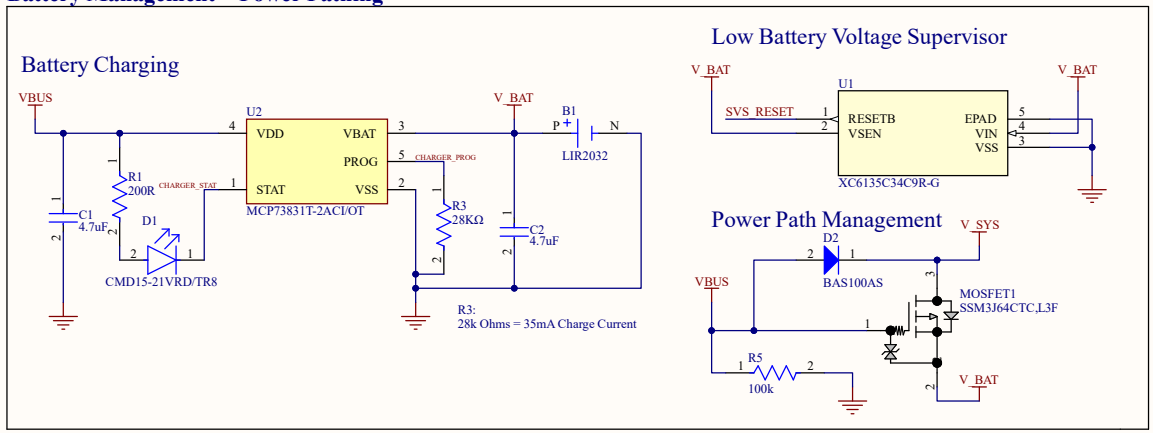


## LDO (3.3V Fixed)

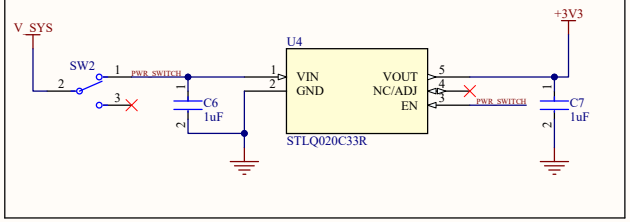


## Accelerometer (BMA400)

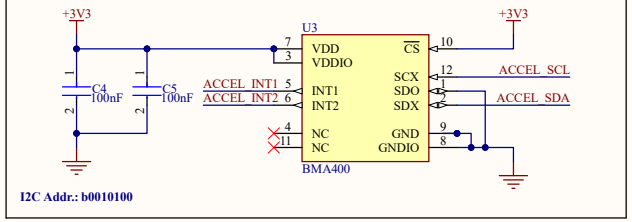


## Boot/Reset Buttons

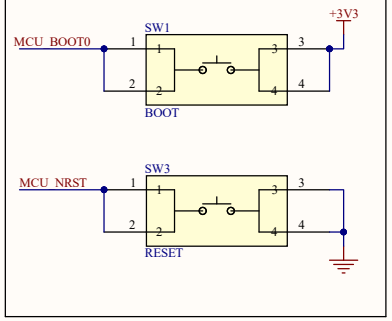


## RGB LED

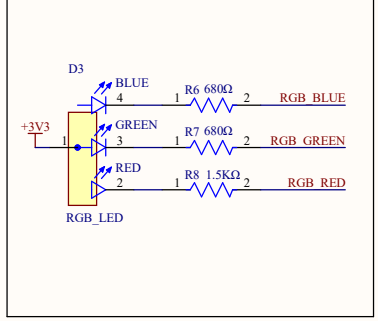


## MCU (STM32U073K8U6)

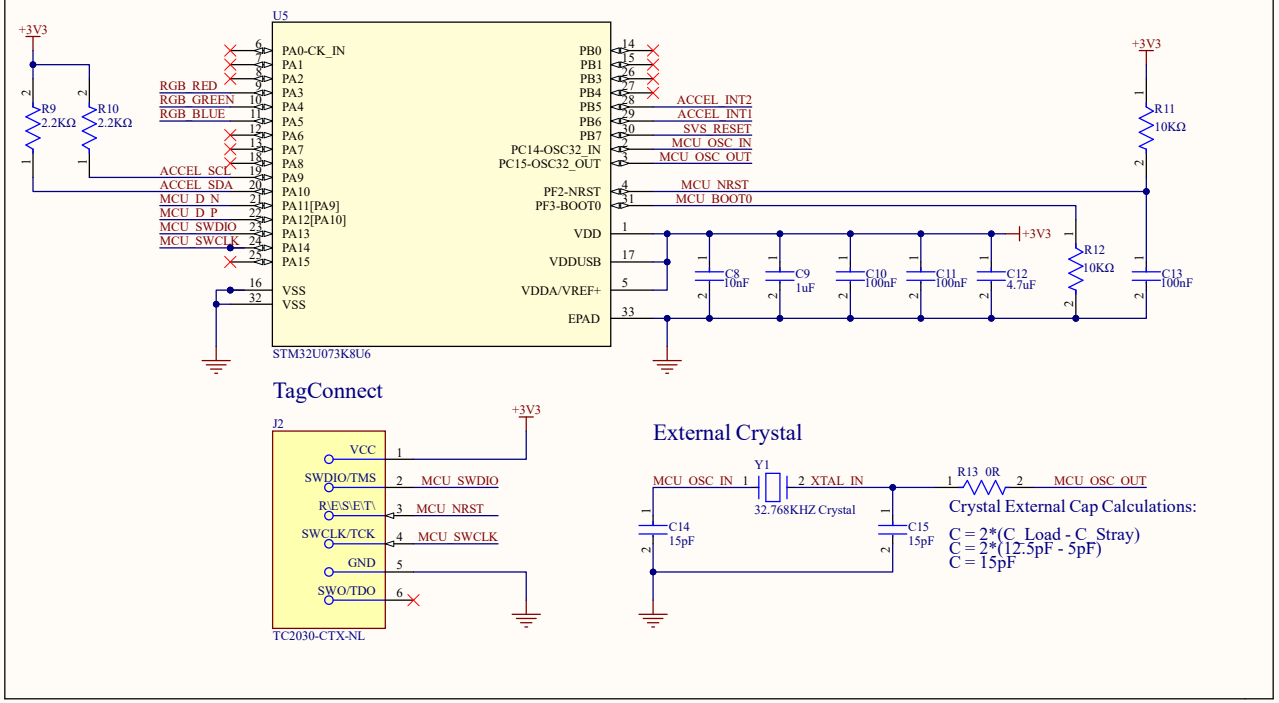


| Title | Naiad Main Board | |
|---|---|---|
| Size A3 | Number | Revision |
| Date: 4-21-2026 | Sheet of | |
| File: C:\Users\..\ProjectNaiad_Schematic.SchDoc | Drawn By: | |