B.M.S. COLLEGE OF ENGINEERING BENGALURU

Autonomous Institute, Affiliated to VTU

Object Oriented Analysis and Design

*OOMD LAB WORK(**SEQUENCE DIAGRAMs**)*

Bachelor of Technology

in

Computer Science and Engineering

Submitted by:

Shivangi Balodia

1BM17CS096

Department of Computer Science and Engineering
B.M.S. College of Engineering
Bull Temple Road, Basavanagudi, Bangalore 560 019
Jan-May 2019

Table of Contents

1.College Information System
2.Hostel Management System
3.Stock Maintenance System
4.Coffee Vending Machine
5.Online Shopping System
6.Railway reservation system
7.Graphics Editor

1. COLLEGE INFORMATION SYSTEM

Simple Sequence Diagram

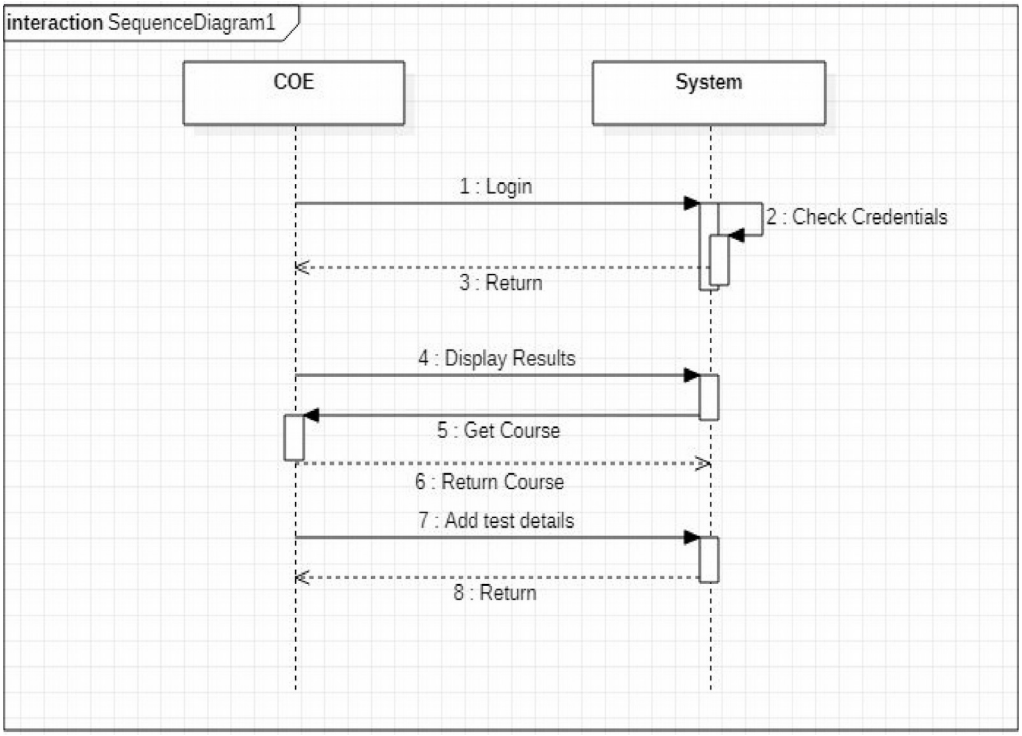

COE logs into system, the system checks credentials and returns control. The COE then displays results, system asks for the course, and once course is received, the control is returned to the COE for him/her to add the test/exam details.

Advance Sequence Diagram

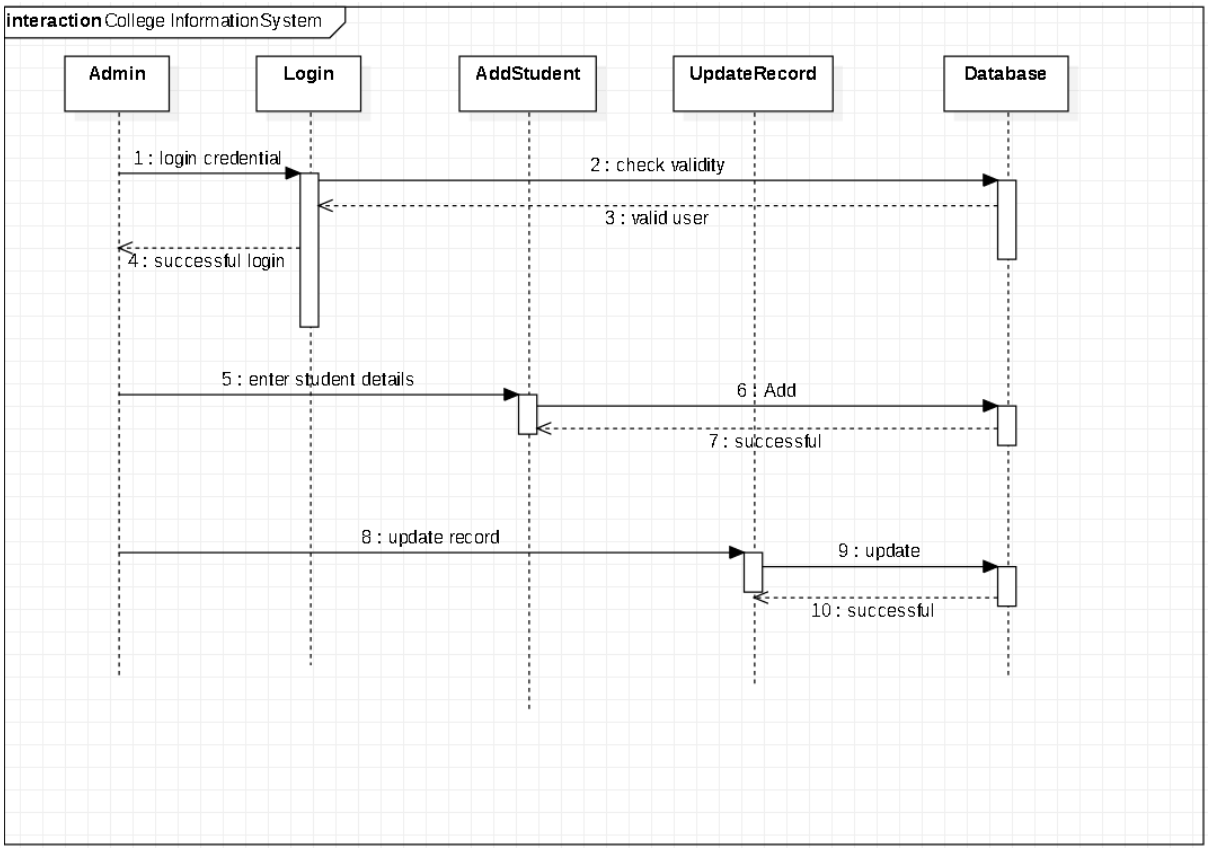

It depicts the process of logging and adding the student details.Admin logins the college website using his/her credential.After logging , Admin add the students details and update record in college database.

2. HOSTEL MANAGEMENT SYSTEM

Simple Sequence

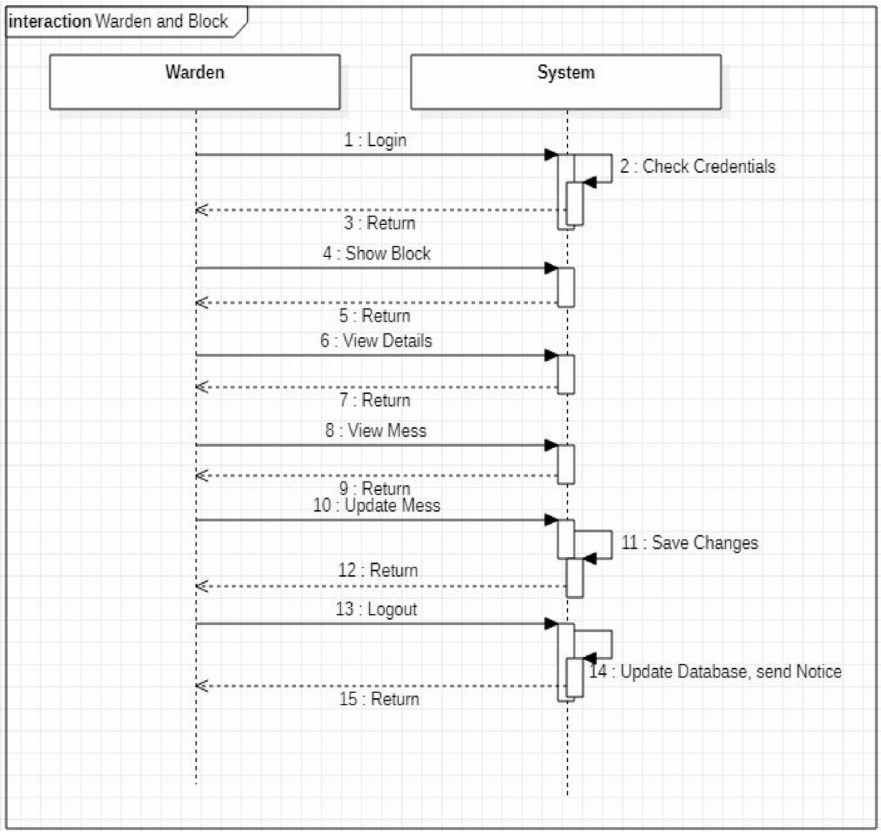

Shows the sequence when the warden is using the system. First login credentials are verified and if authorized, warden gain control. The warden can then view the blocks under his/her control and can also view and update mess details and then finally log-out, before which the system updates changes (if any).

Advance Sequence

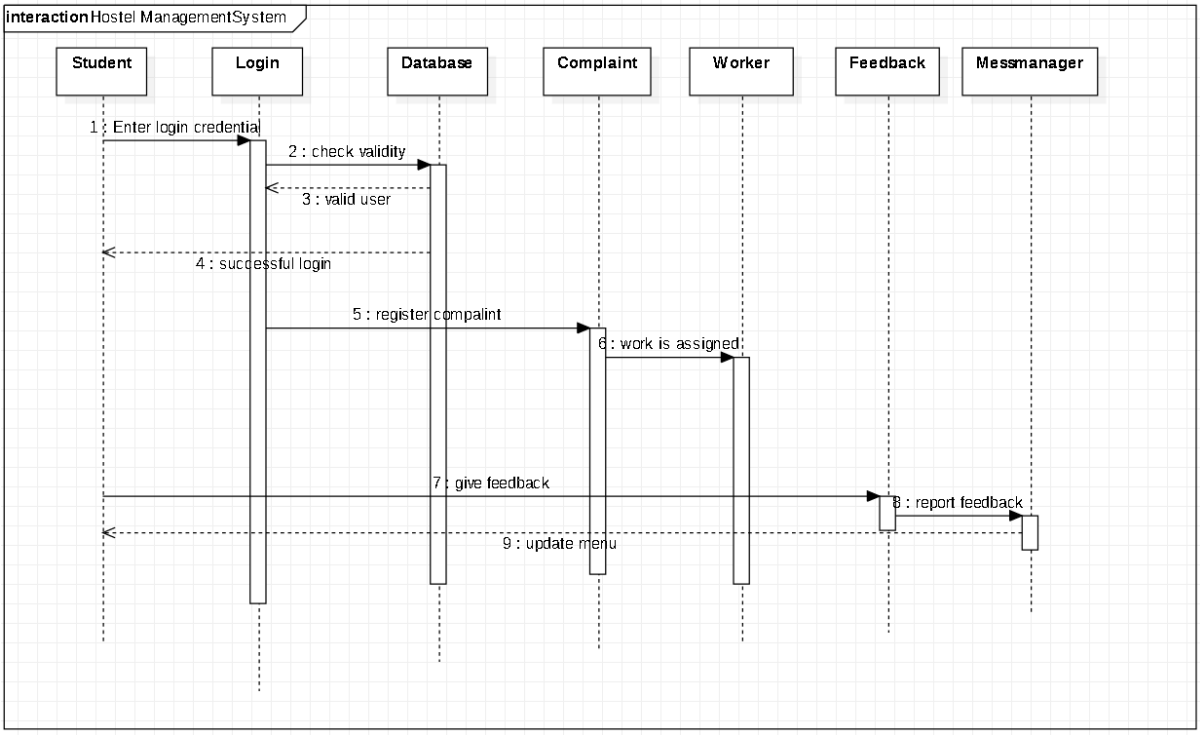

In this advanced sequence diagram Student login in the hostel management system using their credential ,if authorized ,it shows message successful logins to the system. If student any complaints they can register .Student can also give feedback regarding mess ,Mess Manger can update the changes in menu based on the student feedback on the menus

3. STOCK MAINTENANCE SYSTEM

Simple Sequence

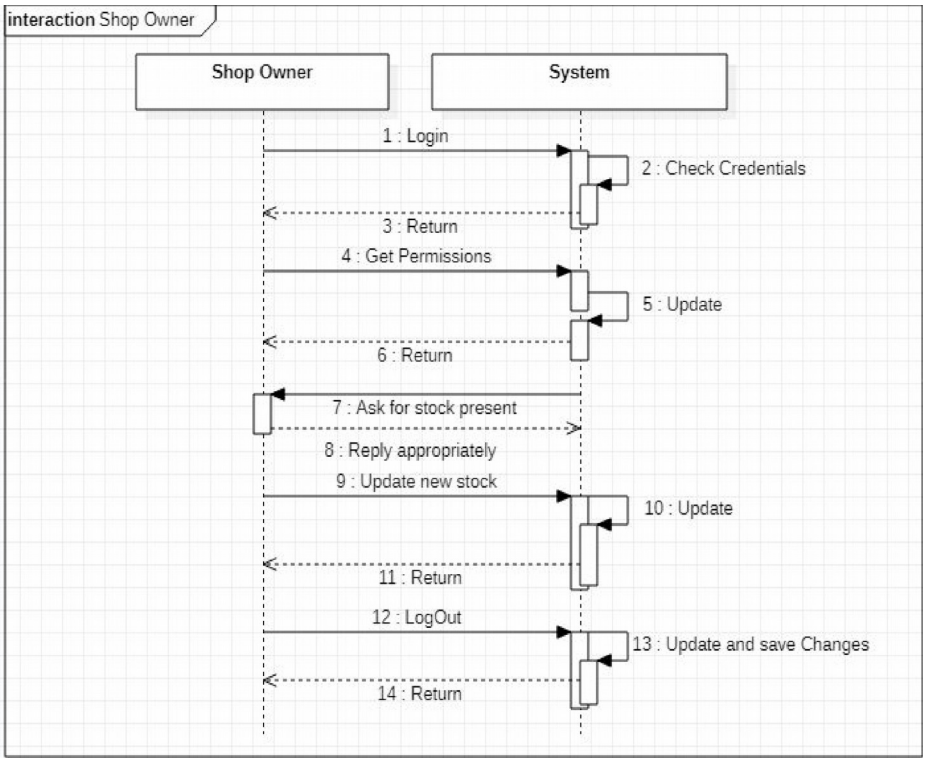

The shop owner first logs into the system and gains control once verified. Stock is then checked and then updated by the Shop Owner. The system internally updates said changes. The shop owner then logs out and the overall changes are updated.

Advance Sequence

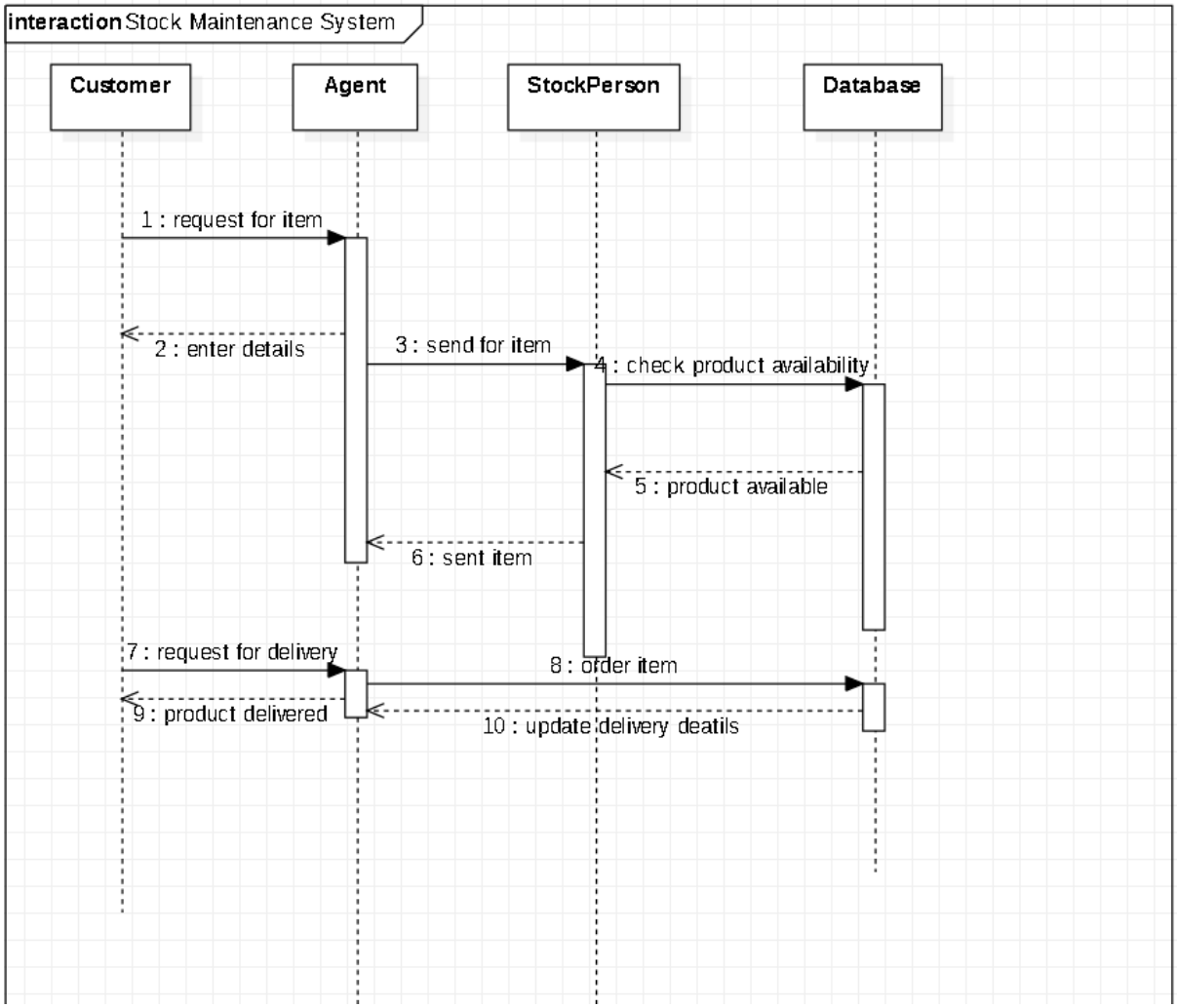

In this sequenece diagram Customer request an item to a Agent. Agent send for item to a Stock person .Stock Person check availability in the database.If available send the item to agent .After this customer request for delivery to agent.Agent order the item update the item details in database and product is delivered

4. COFFEE VENDING MACHINE

Simple Sequence

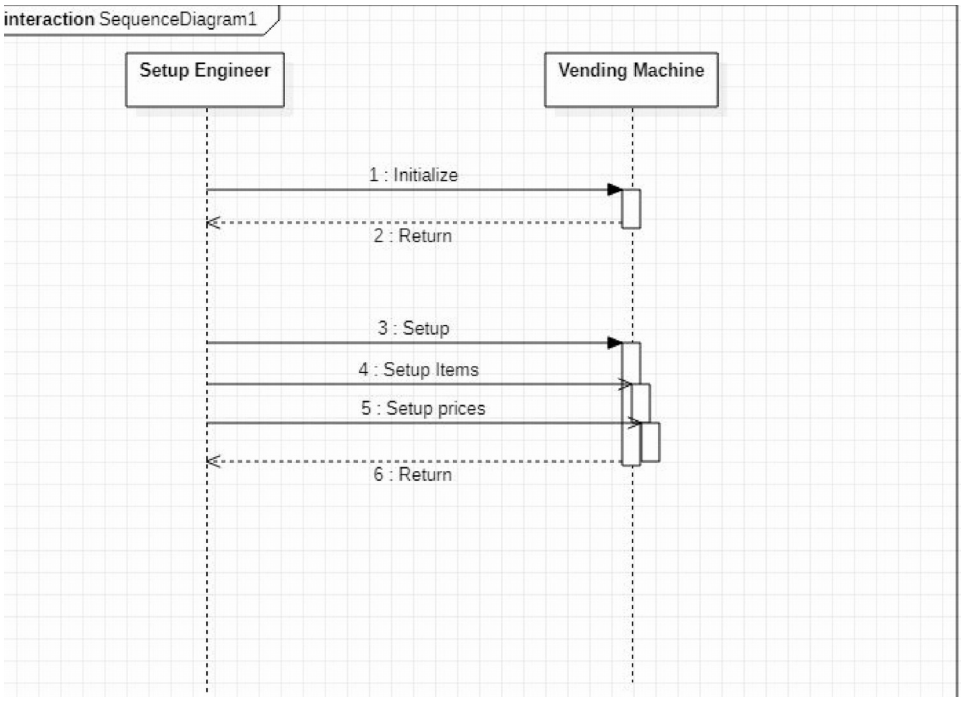

This simple sequence diagram shows the interaction between the setup engineer and vending machine to set the machine up.
Once initialization is done, the engineer gains control, using which he/she can perform the setup, e.g. update prices, items, etc. After the setup is done, process is completed.

Advance Sequence

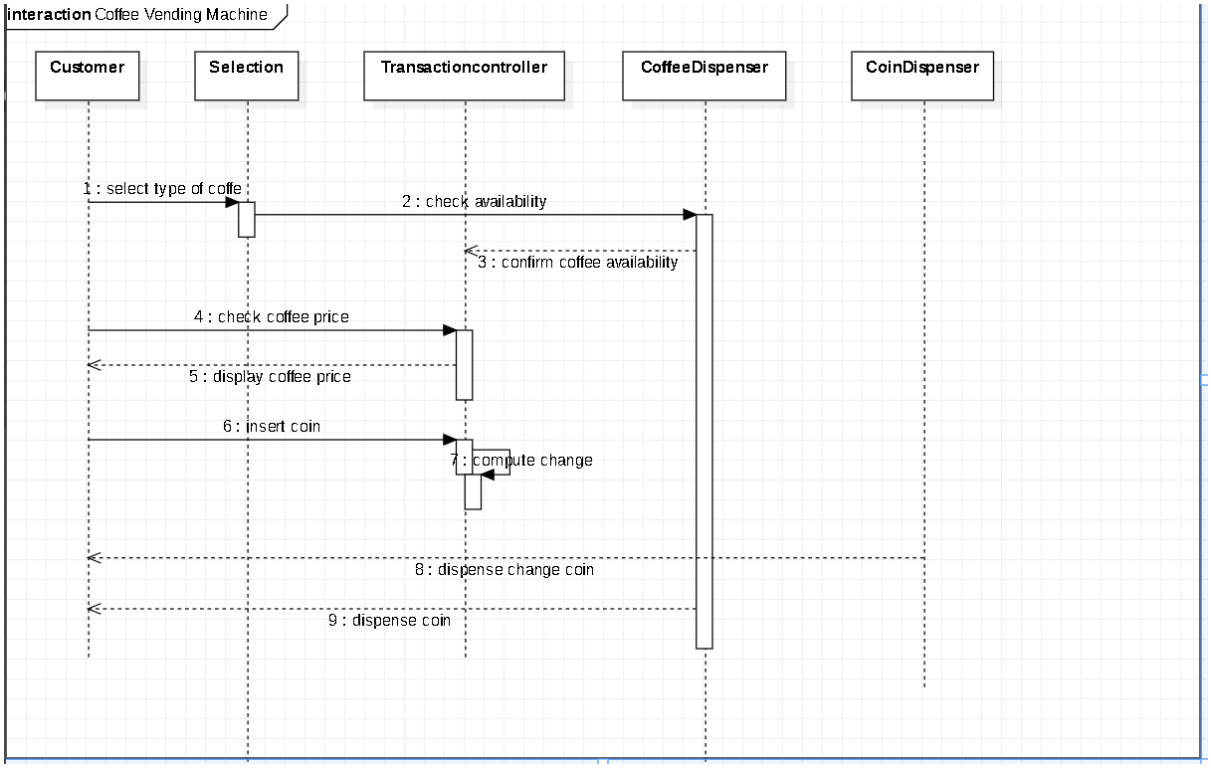

In this diagram ,Customer select type of coffee, Selection check availability to a coffee dispenser, confirms the coffee availability to a transaction controller. After this customer check the coffee price to a transaction controller and then this controller displays the coffee price to a customer.Customer insert the coin transcarion controller compute the changes of coins and then dispense the coin to a customer through coin dispenser.Coffee dispenser dispense the coffee to a customer.

5. ONLINE SHOPPING SYSTEM

Simple Sequence

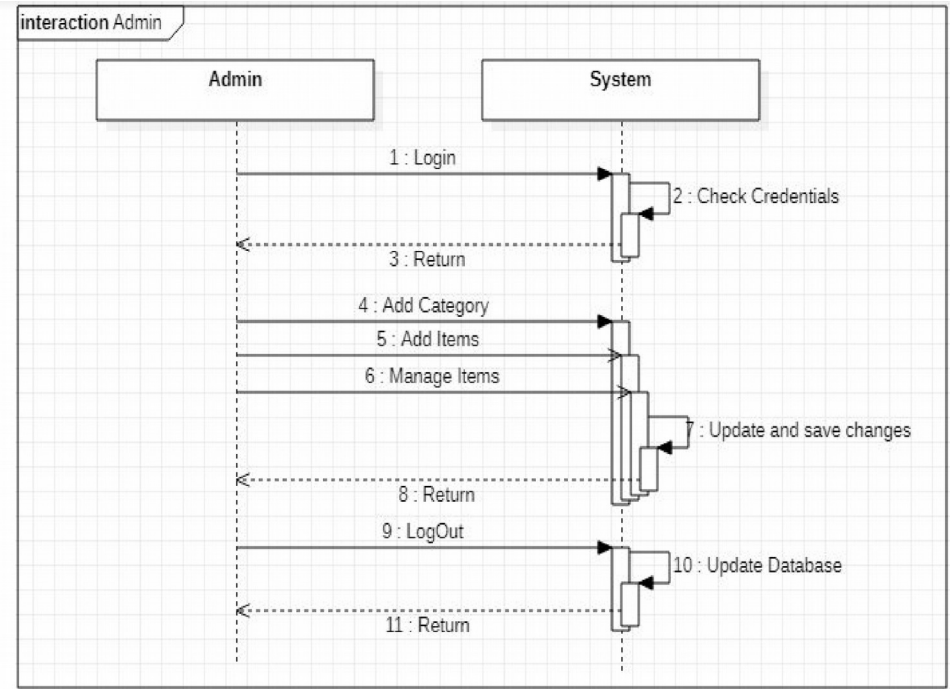

The admin first logs in and once in, he/she can manage the catalog, i.e. add categories, items, etc. These catalog changes are first updated locally and on logout are updated to the database.

Advance Sequence

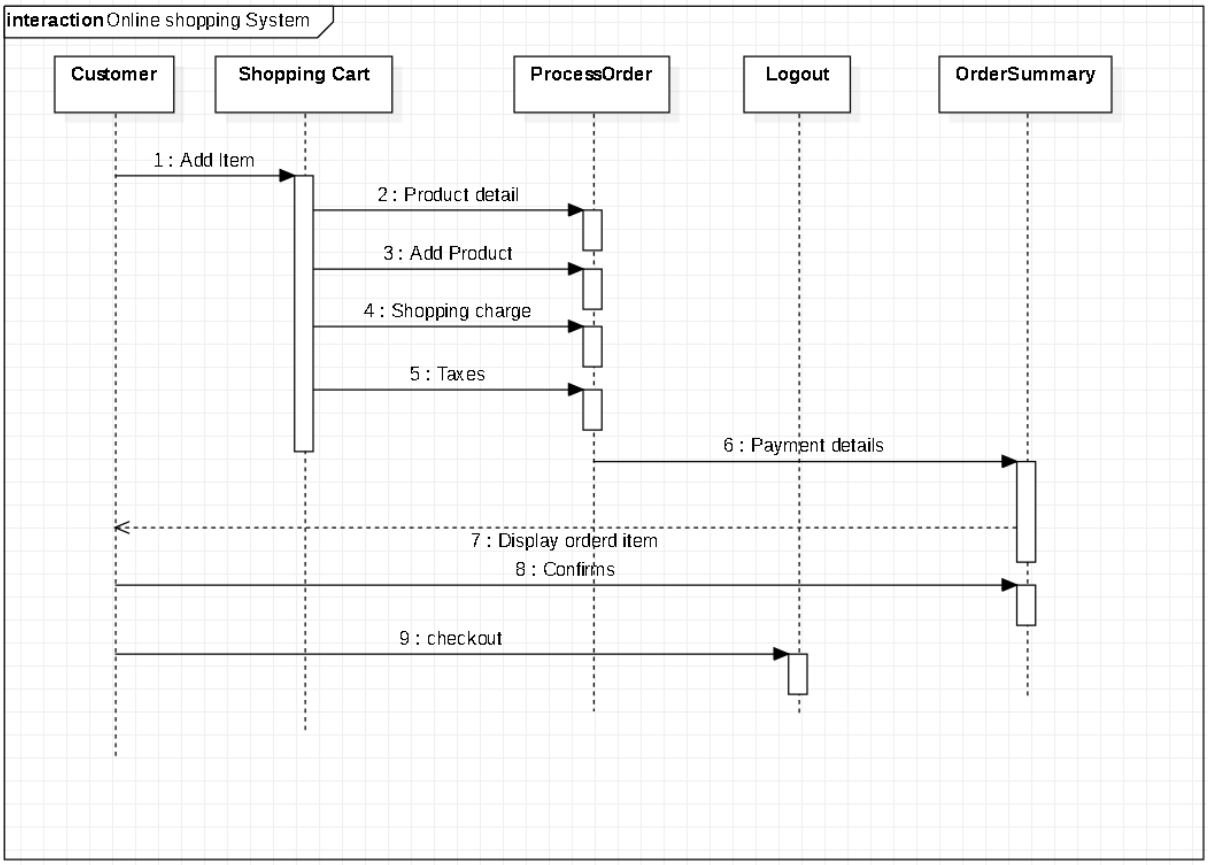

In this diagram shows the the steps for purchasing an item and tracking the order,customer can views the product details and add the product,shopping charges and taxes to process order.It processed payment details and display ordered item after confirm, customer logout.

6. RAILWAY RESERVATION SYSTEM

Simple Sequence

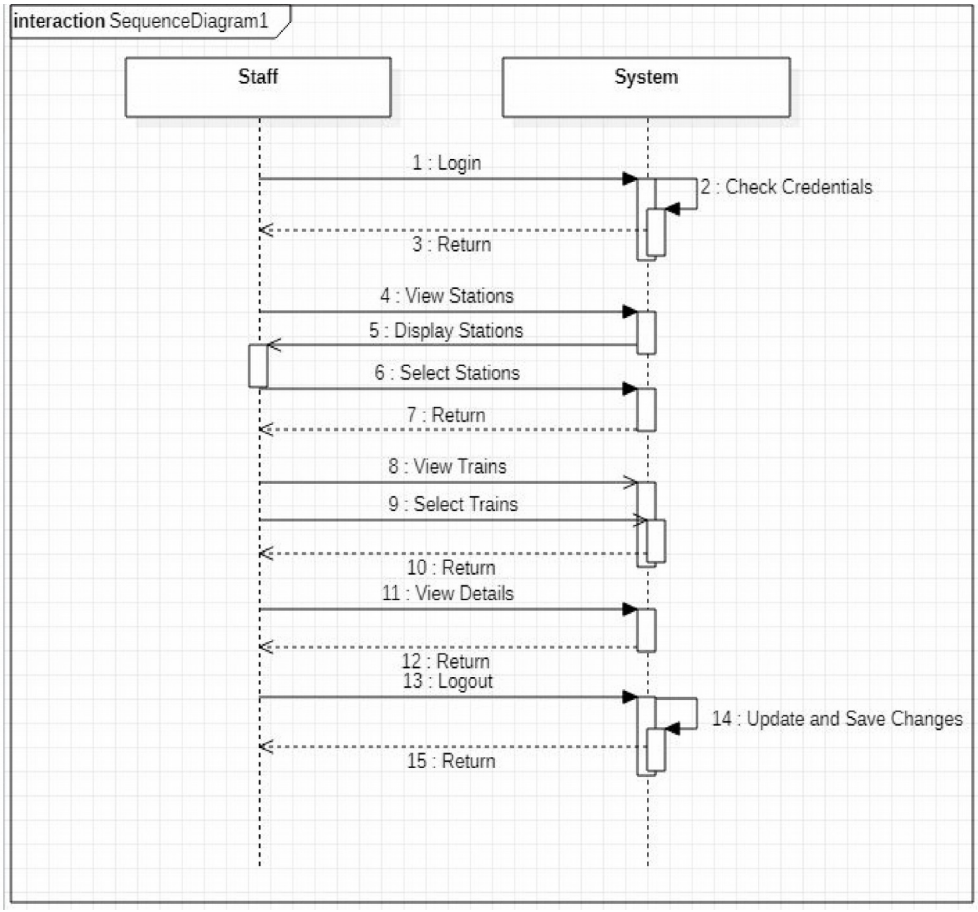

The railway staff's credentials are verified and then given control. They can view stations after giving the command. They can also select stations and view trains and their corresponding details. After the work is done they shall logout and any changes shall be saved.

Advance Sequence

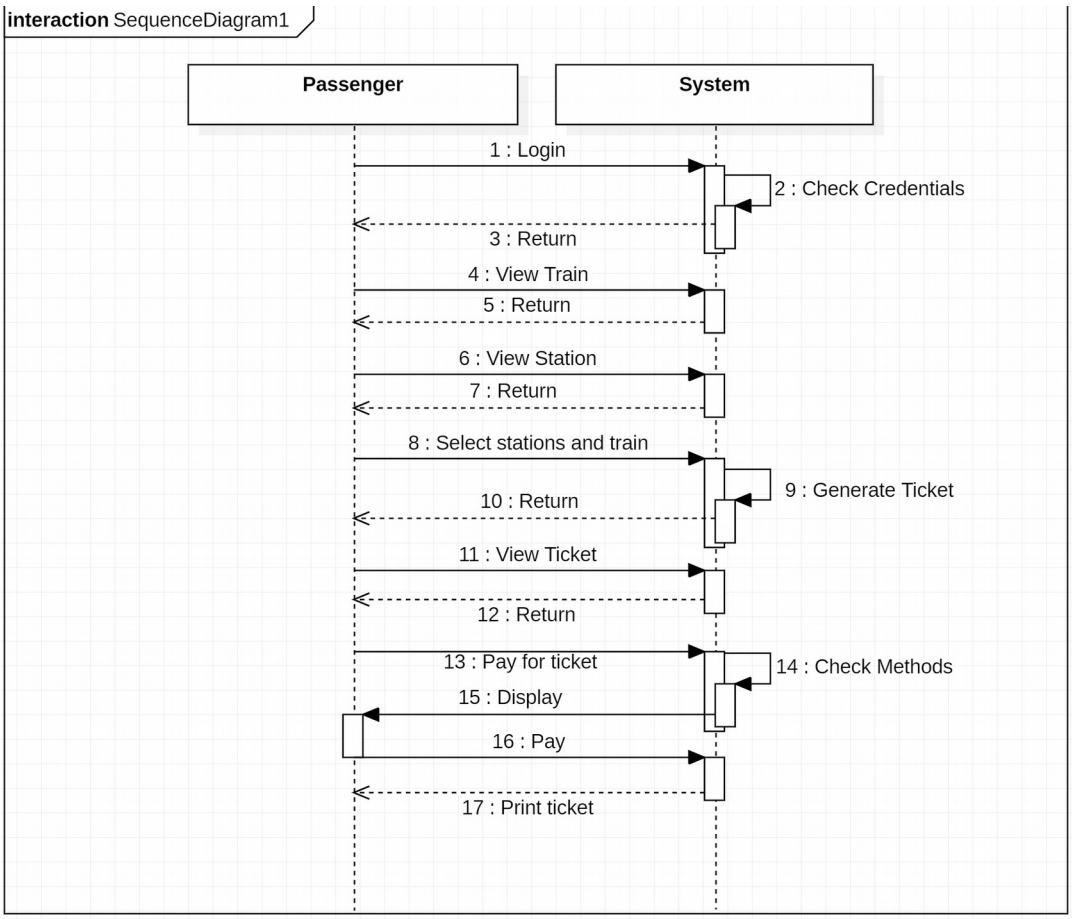

This sequence diagram shows the interaction between the passenger and the system, for the ticket buying process.
The passenger first logs into the system, the system authenticates and returns. The user then views the train, system returns the details of present trains, the user then views for stations, the system returns the stations.

7. GRAPHICS EDITOR

Simple Sequence

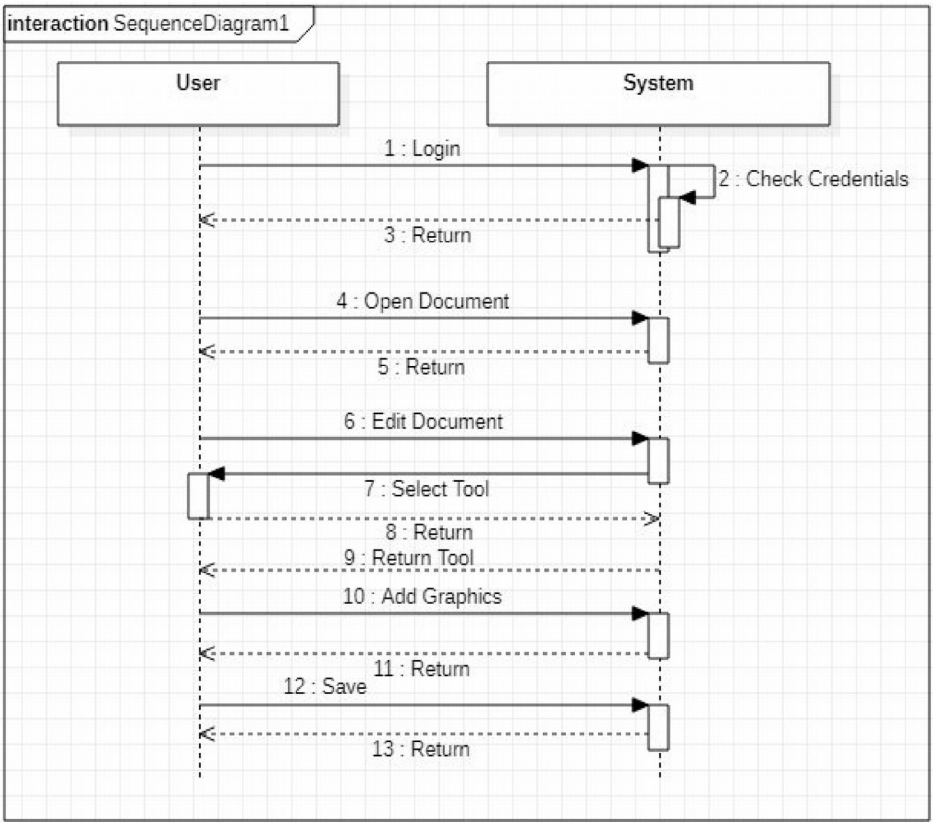

The sequence of events when using the graphics editor is shown. The user first logs in, after getting credentials verified. He/she then open a document and then can edit the document using a selected tool. Furthermore, graphics can be added to the document. These changes are finally saved and control returned back to the user.

Advance Sequence

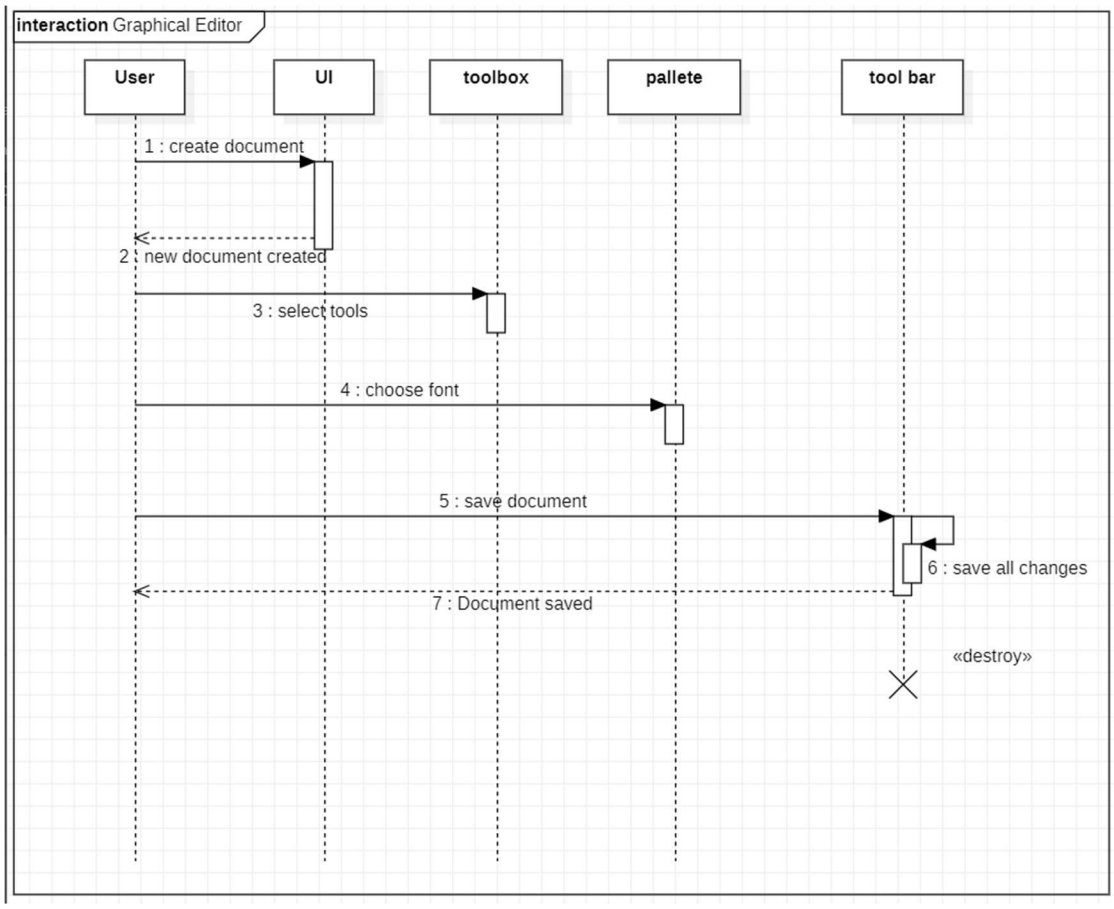

The diagram shows the sequence of steps to handle the document. The system contains passive objects which interact only on receiving the input and stay inactive rest of the time.