THE NATIONAL INSTITUTE OF ENGINEERING

South Campus, Mysuru – 570008

Department of Electronics and Communication Engineering

VIRTUAL LAB REPORT

ON

Linear Integrated Circuits Lab using PSPICE

TOPIC:

Characteristics and Parameters of Operational Amplifier (IC 741)

***Submitted by*:**

SHIVALEELA BASAPPA HEBBALLI

(4NI25EC420)

CLASS: ECE "C1", SEM:4

***Submitted to*:**

Dr. Remya Jayachandran
Department of Electronics and Communication Engineering

Characteristics and Parameters of Operational Amplifier (IC 741)

Aim:

To study and measure the following characteristics and parameters of Op-Amp using IC 741 in Virtual Lab:

1. Input bias current at inverting terminal
2. Input bias current at non-inverting terminal
3. Input offset current
4. Input offset voltage
5. Slew rate

Apparatus / Software Used

- Virtual Analog Electronics Lab (VLABS)
- IC 741 Op-Amp
- DC Power Supply (±15V)
- Resistors (470kΩ, etc.)
- Function Generator
- CRO / Oscilloscope
- Digital Multimeter (DMM)

Theory

- **Operational Amplifier**

An Operational Amplifier (Op-Amp) is a high gain differential amplifier with:

- High input impedance
- Low output impedance
- Very high open-loop gain

The op-amp used in this experiment is:

- **IC 741 Operational Amplifier**

Important Specifications (Typical Values)

Parameter	Typical Value
Input Bias Current	80 nA
Input Offset Current	20 nA
Input Offset Voltage	1–5 mV
Slew Rate	0.5 V/µs
Gain Bandwidth Product	1 MHz

Pin Configuration of IC 741

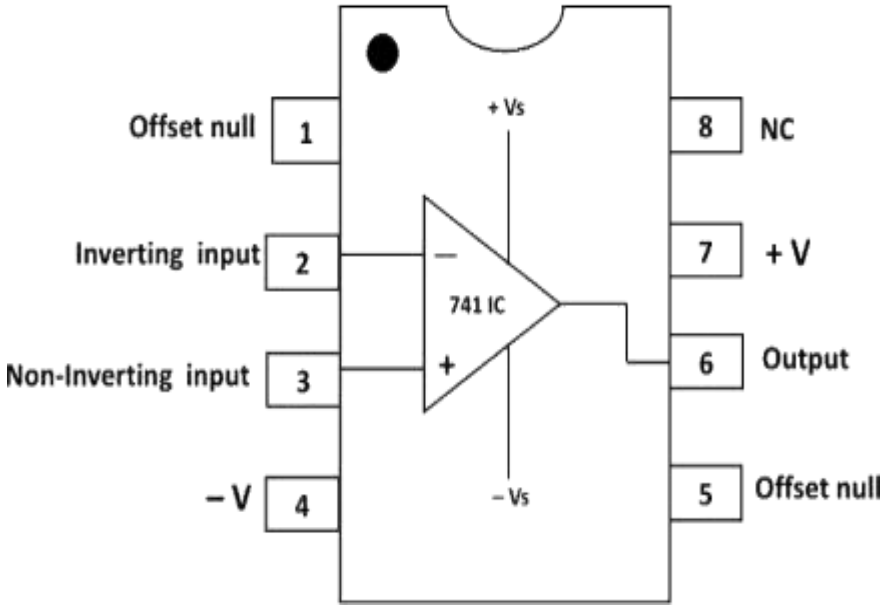

Procedure and Observations

1.Input Bias Current at Inverting Terminal (IB−) Circuit

Description

- Non-inverting terminal grounded.
- Feedback resistor connected between output and inverting terminal.
- Input voltage = 0V.
- ±15V supply applied.

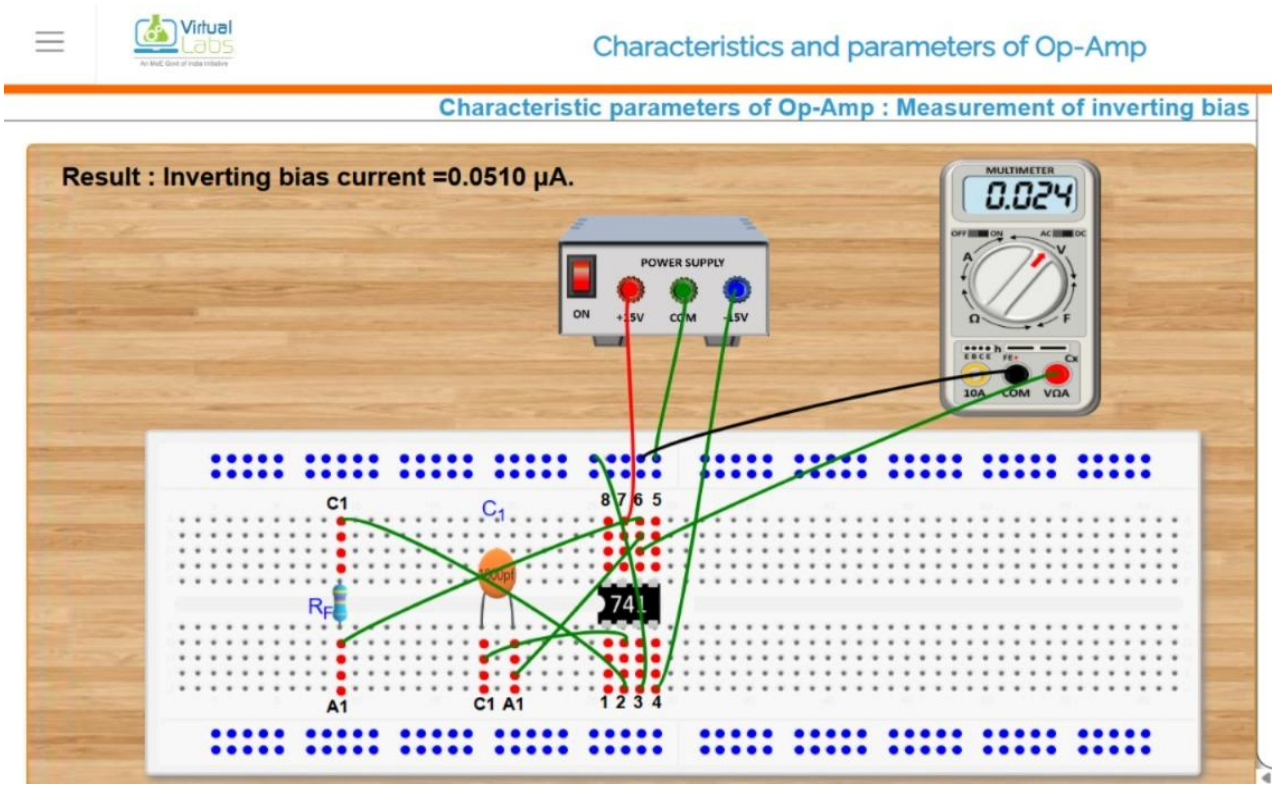

Figure 1: Circuit setup for measuring Input Bias Current at Inverting Terminal

Formula

$$I_{B-} = \frac{V_o}{R_f}$$

Where:
Vo = Output voltage
Rf = Feedback resistor

Observation Table

Rf (Ω)	Vo (V)	IB- (µA)
470K	0.024	0.0510

Result

The input bias current at inverting terminal was found to be **0.0510 µA**

2.Input Bias Current at Non-Inverting Terminal (IB+) Circuit

Description

- Inverting terminal grounded.
- Resistor connected to non-inverting terminal.
- Measure output voltage.

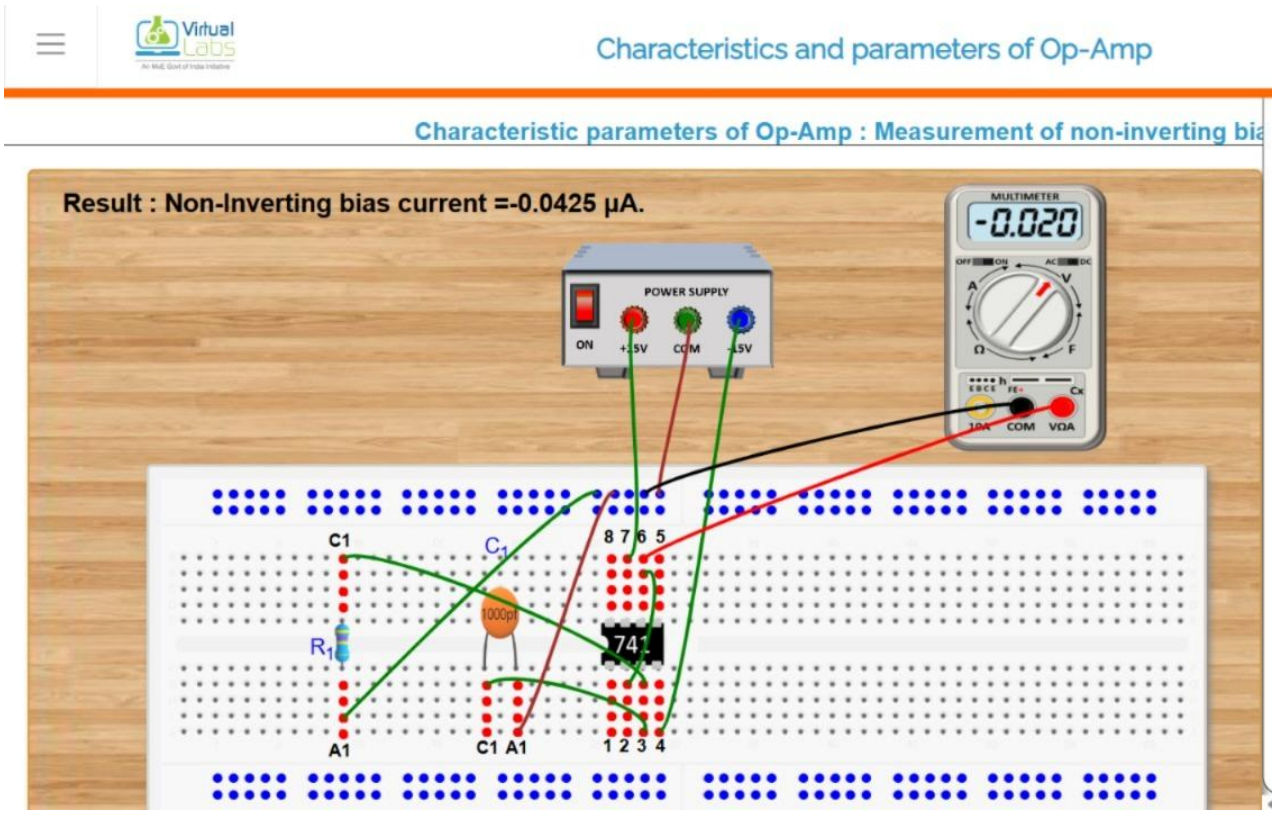

Figure 2: Circuit setup for measuring Input Bias Current at Non- Inverting Terminal

Formula

$$I_{B+} = \frac{V_o}{R}$$

Observation Table

R (Ω)	Vo (V)	IB+ (µA)
470K	-0.020	-0.0425

Result

The input bias current at non-inverting terminal was found to be -0.0425µA

3.Input Offset Current (IOS)

Definition

Input Offset Current is the difference between the two bias currents.

$$I_{OS} = | I_{B+} - I_{B-} |$$

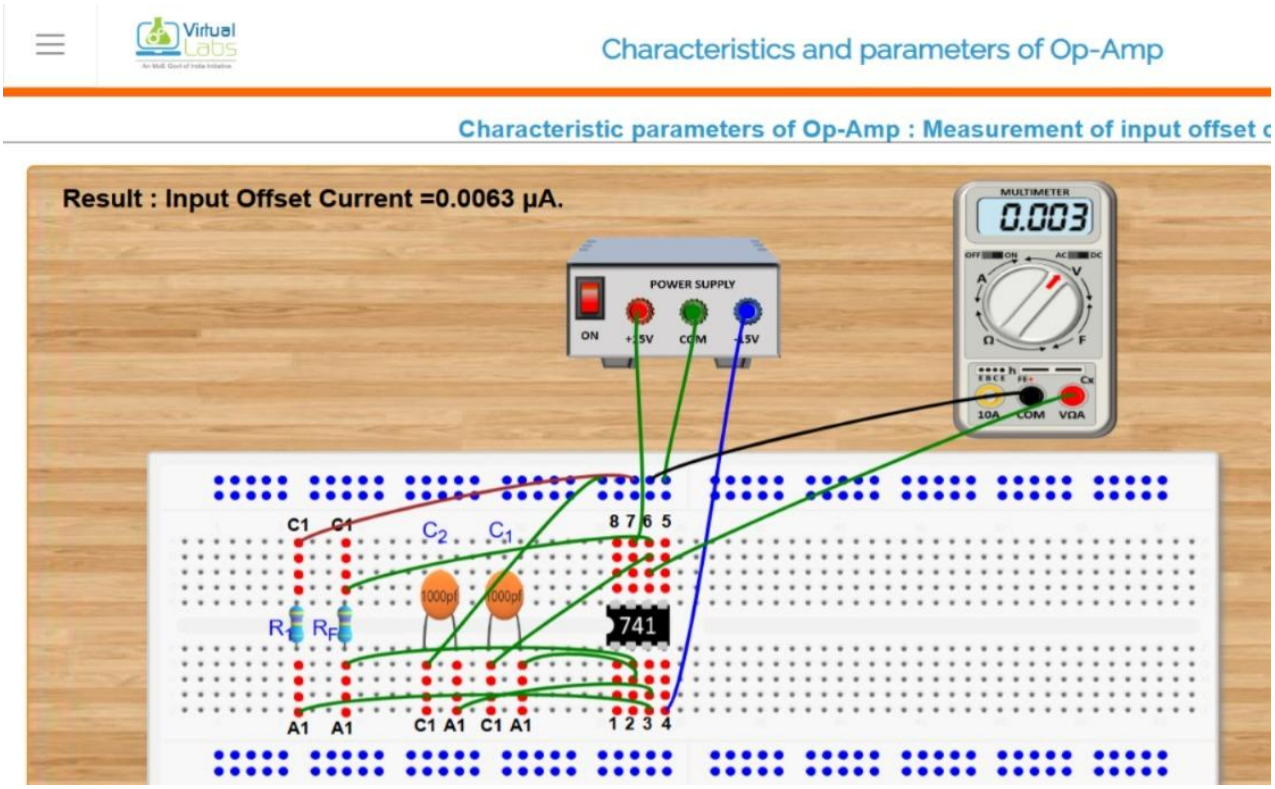

Figure 3: Circuit setup for measuring Input Offset current

Calculation

$$I_{io} = \frac{V_o}{Rf} = 0.003/470K = 0.00638\ \mu A$$

Result

The input offset current of IC 741 was found to be 0.00638**µA**

4. Input Offset Voltage (VIO)

Circuit Description

- Op-amp configured in high gain mode.
- Input grounded.
- Output voltage measured.

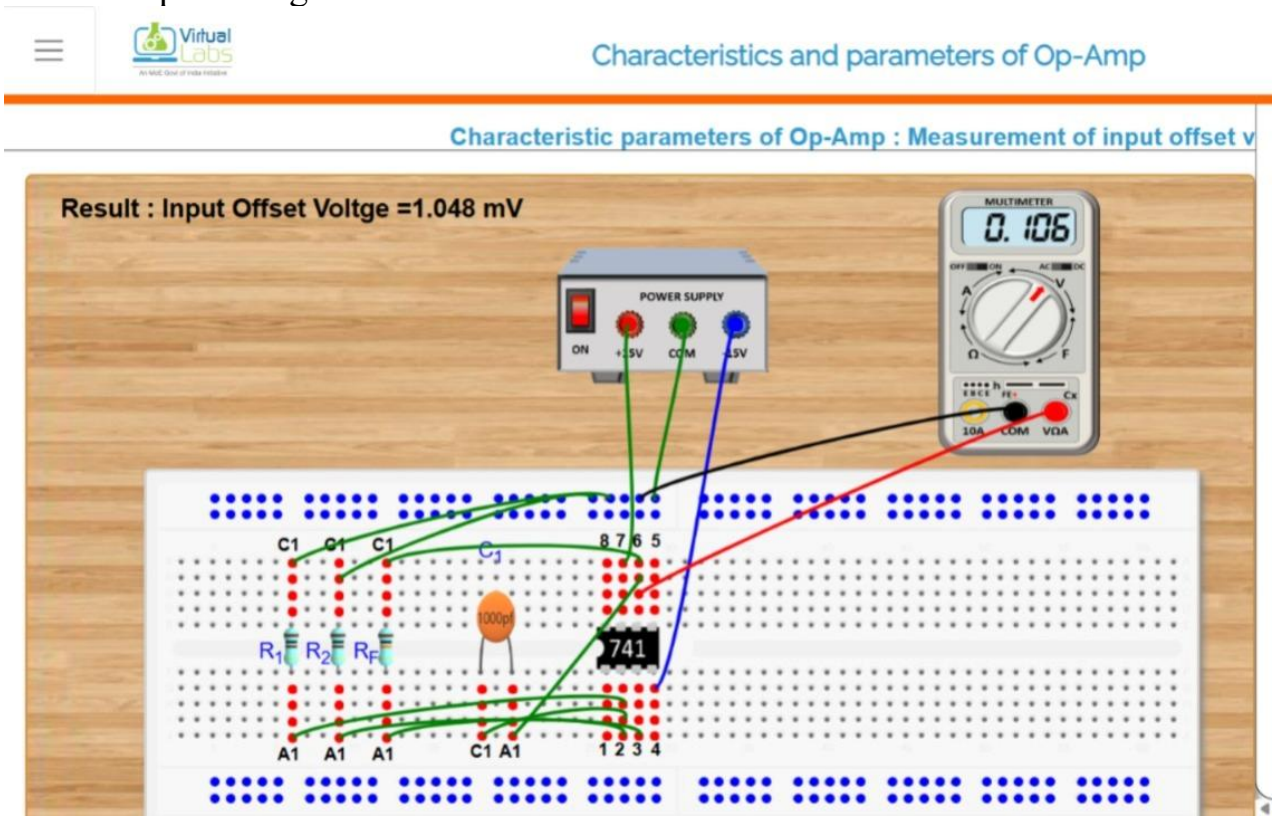

Figure 4: Circuit setup for measuring Input Offset Voltag

Formula

$V_{io} = (V_o - I_{io}R_f)/(1+R_f/R_i) = (0.106-(0.00638\ \mu*10K))/(1+10K/100) = 1.048mV$

Result

The input offset voltage was found to be approximately 1.048 mV.

5. Slew Rate Circuit

Description

- Sine wave input applied.
- Output waveform observed on CRO.

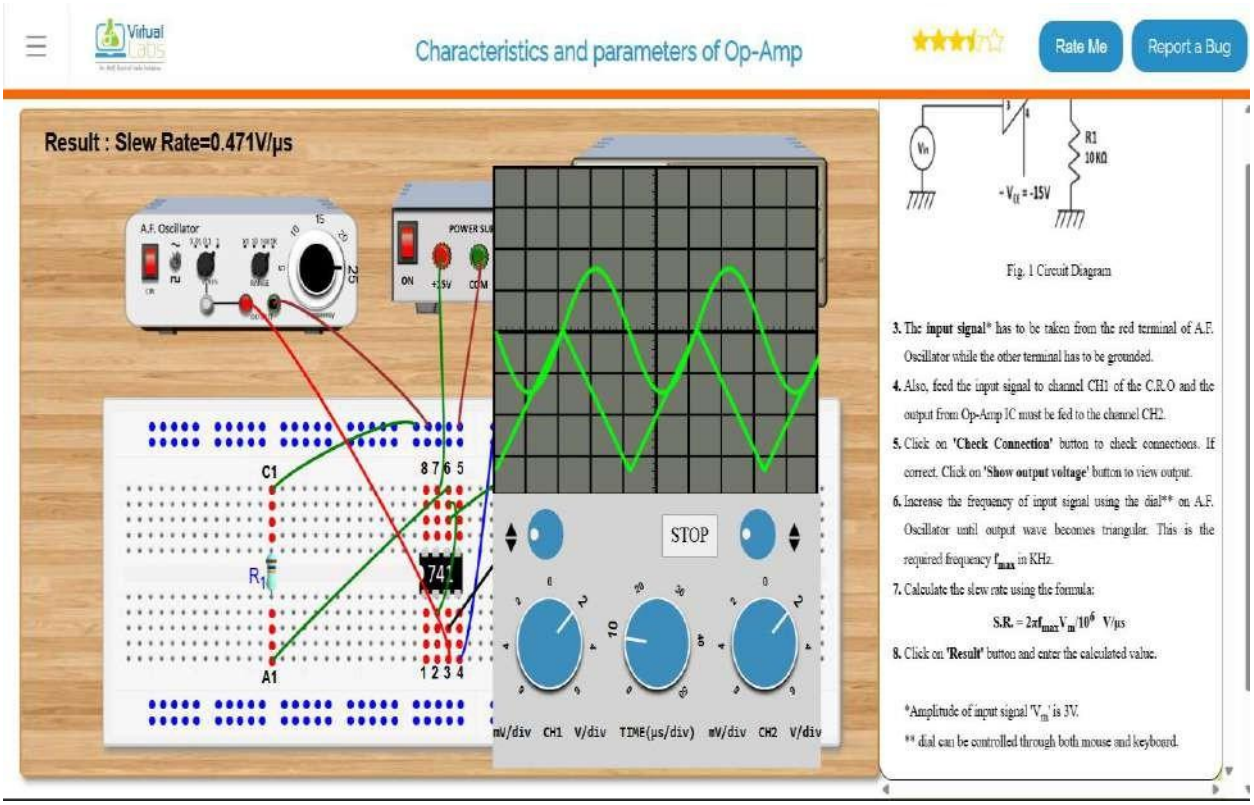

Figure 5: Output waveform showing Slew Rate measuremen

Formula

Slew rate ,S.R. = $2\pi f_{max} V_m/10^6$ **V/µs=2π(25K) *3/10^6=0.471** V/µs Unit: V/µs

Result

The slew rate of IC 741 was found to be **0.471**V/µs.

Final Results Summary

Parameter	Measured Value
IB−	**0.0510** µA
IB+	**-0.0425** µA
IOS	0.00638 **µA**
VIO	1.048mV
Slew Rate	**0.471** V/µs

Conclusion

The characteristics and parameters of IC 741 operational amplifier were successfully studied and measured using Virtual Lab. The measured values were found to be approximately equal to the standard theoretical values, with slight variations due to practical limitations of the device.