UNIT-2

Combinational Logic Circuits

- A combinational circuit is a connected arrangement of logic gates with a set of inputs and outputs.

- Combinational Logic Circuits are made up from basic logic NAND, NOR or NOT gates that are "combined" or connected together to produce more complicated switching circuits. These logic gates are the building blocks of combinational logic circuits.

- Combinational circuits made up from individual logic gates that carry out a desired application include Multiplexers, De-multiplexers, Encoders, Decoders, Full and Half Adders etc.

- A combinational circuit comprises of input variables, logic gates and output variables. The logic gates accepts the inputs and depending on the type of functioning of the logic gate, output signals are generated from them.

fig : Block diagram of Combinational circuit

- The figure shows the schematic representation of a generalized combinational logic circuit consisting of n input variable and m output variables.

- The n binary input variables come from an external source, m binary output variables go to an external destination, and in between there is an interconnection of logic gates.

- There are n input variables and hence there will be 2^n possible combinations of bits at the input. By a Boolean expression of input variables, each output is expressed. So the result can be expressed by m Boolean expressions.

- Combinational circuits are used in a wide variety applications including ***calculators, digital measuring techniques, computers, digital processing, automatic control of machines, industrial processing, digital communications***, etc.

The Multiplexer (Data Selectors)

- Multiplexing is the generic term used to describe the operation of sending one or more analogue or digital signals over a common transmission line at different times or speeds and as such, the device we use to do that is called a **Multiplexer**.
- Multiplexer means many into one. It is a combinational circuit that receives binary information from one of 2^n input data lines and directs it to a single output line.
- A multiplexer is a circuit used to select and route any one of the several input signals to a signal output.
- A multiplexer of 2^n inputs has n selected lines, are used to select which input line to send to the output. If there are n data input lines and m select lines, then

$$2^m = n$$

Shown below is the multiplexer with n input signal, m control signals and one output signal.

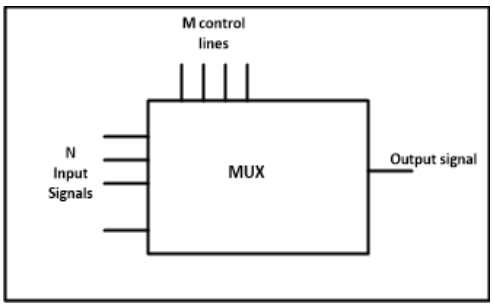

Applications of Multiplexers

Multiplexers are used in various applications wherein multiple-data need to be transmitted by using single line.

- **Communication System**

A communication system has both a communication network and a transmission system. By using a multiplexer, the efficiency of the communication system can be increased by allowing the transmission of data, such as audio and video data from different channels through single lines or cables.

- **Computer Memory**

Multiplexers are used in computer memory to maintain a huge amount of memory in the computers, and also to reduce the number of copper lines required to connect the memory to other parts of the computer.

- **Telephone Network**

In telephone networks, multiple audio signals are integrated on a single line of transmission with the help of a multiplexer.

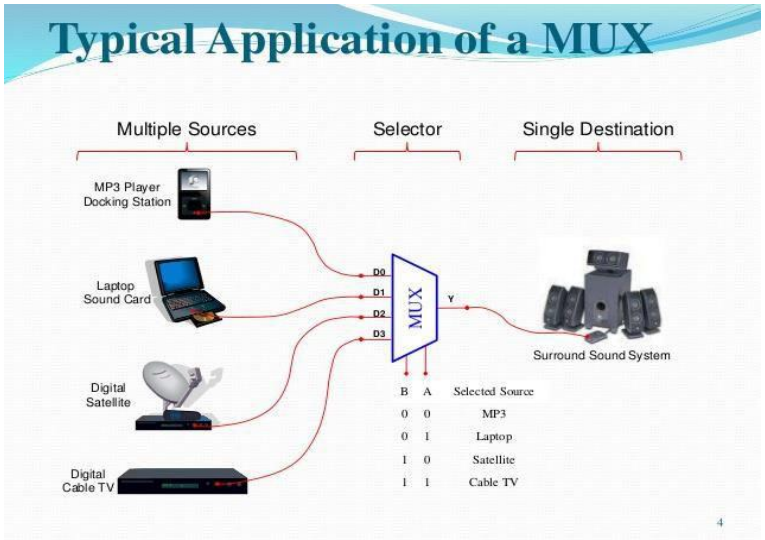

Multiplexer Types

Multiplexers are classified into four types:

- 2-1 multiplexer (1 select line)
- 4-1 multiplexer (2 select lines)
- 8-1 multiplexer(3 select lines)
- 16-1 multiplexer (4 select lines)

2:1 Multiplexer

Block Diagram

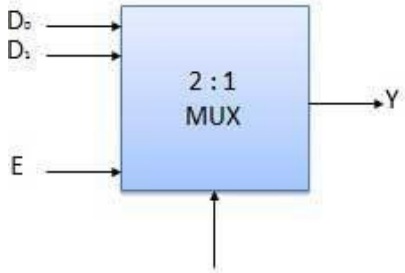

Truth Table

Enable	Select	Output
E	S	Y
0	x	0
1	0	D_0
1	1	D_1

x = Don't care

- A 2-to-1 multiplexer consists of two inputs D_0 and D_1, one select input S and one output Y. Depends on the select signal, the output is connected to either of the inputs.

- Since there are two input signals only two ways are possible to connect the inputs to the outputs, so one select is needed to do these operations.

- If the select line is low, then the output will be switched to D_0 input, whereas if select line is high, then the output will be switched to D_1 input.

4-to-1 Multiplexer

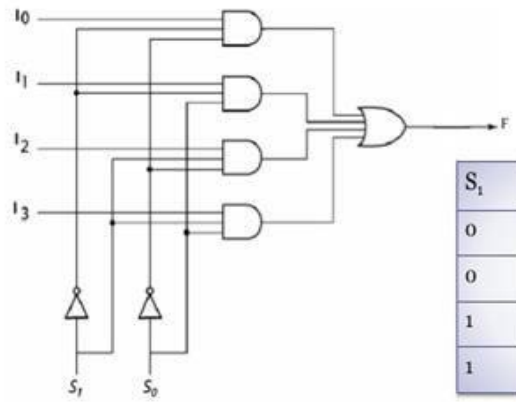

S_1	S_0	F
0	0	I0
0	1	I1
1	0	I2
1	1	I3

- The 4-to-1 multiplexer has 4 input bit, 2 control bits, and 1 output bit.
- The four input bits are I_0,I_1,I_2 and I_3. Only one of this is transmitted to the output F. The output depends on the value of S_1 and S_0 which is the control input. The control input determines which of the input data bit is transmitted to the output.
- When S_1S_0 = 00, the upper AND gate is enabled while all other AND gates are disabled. Therefore, data bit I_0 is transmitted to the output, giving F = Io.
- If the control input is changed to S_0S_1 =11, all gates are disabled except the bottom AND gate. In this case, I_3 is transmitted to the output and F = I_3.

8 : 1 Multiplexer

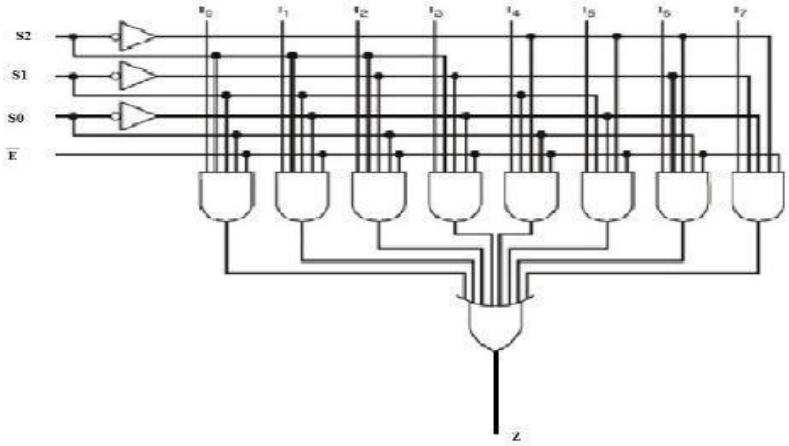

S_0	S_1	S_3	Z
0	0	0	I_0
0	0	1	I_1
0	1	0	I_2
0	1	1	I_3
1	0	0	I_4
1	0	1	I_5
1	1	0	I_6
1	1	1	I_7

- It has eight data inputs I_0 to I_7, three select inputs S_0 to S_2, an enable input and one output.

- An 8-to-1 multiplexer with enable input that enable or disable the multiplexer. Since the number data bits given to the MUX are eight then 3 bits (2^3=8) are needed to select one of the eight data bits.

- For example, if S_2= 0, S_1=1 and S_0=0 then the data output Y is equal to I_2. Similarly the data outputs I_0 to I_7 will be selected through the combinations of S_2, S_1 and S_0.

- When enable pin is set to one, the multiplexer will be disabled and if it is zero then select lines will select the corresponding data input to pass through the output.

De-multiplexer

- A de-multiplexer is a combinational logic circuit that receives the information on a single input and transmits the same information over one of 2^n possible output lines.

- The de-multiplexer is also called as ***data distributors*** since they transmit the same data which is received at the input to different destinations.

- A de-multiplexer is a 1-to-N device where as the multiplexer is an N-to-1 device.

- A de-multiplexer performs the reverse operation of a multiplexer i.e. it receives one input and distributes it over several outputs. It has only one input, n outputs, m select input. At a time only one output line is selected by the select lines and the input is transmitted to the selected output line.

- The main difference between a multiplexer and a de-multiplexer is that a multiplexer takes two or more signals and encodes them on a wire, whereas a de-multiplexer does reverse to what the multiplexer does.

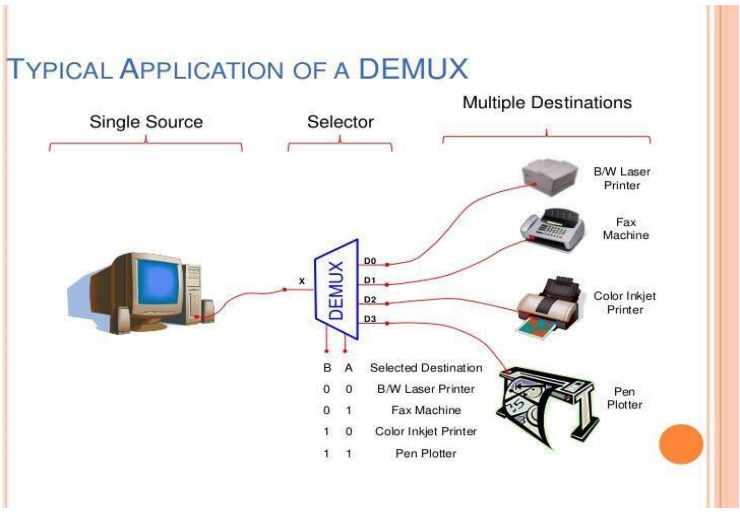

Types of De multiplexer

De-multiplexers are classified into four types

- 1-2 de-multiplexer (1 select line)
- 1-4 de-multiplexer (2 select lines)
- 1-8 de-multiplexer (3 select lines)
- 1-16 de-multiplexer (4 select lines)

1:2 De-multiplexer

Block diagram

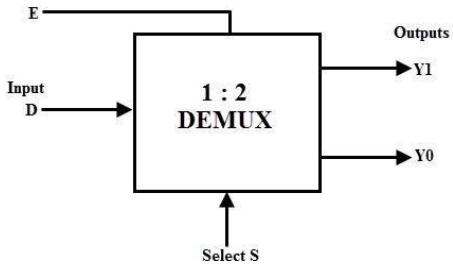

Truth Table

Select	Input	Outputs	
S	D	Y_1	Y_0
0	0	0	0
0	1	0	1
1	0	0	0
1	1	1	0

Circuit Diagram

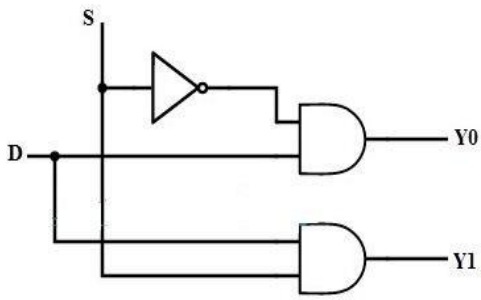

- A 1-to-2 de-multiplexer consists of one input line, two output lines and one select line. The signal on the select line helps to switch the input to one of the two outputs.
- When the select input is low, then the input will be passed to Y_0 and if the select input is high then the input will be passed to Y_1.
- In the table, output Y_1 is active when the combination of select line and input line are active high, i.e., SD = 11.
- Therefore, the output Y1 = SD and similarly the output Y0 is equal to S'D.

1-4 De-multiplexer circuit

Block Diagram

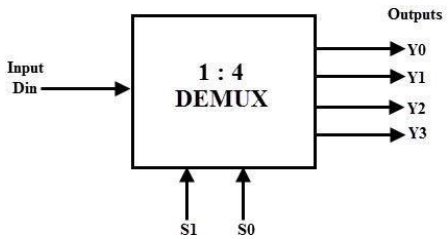

Truth Table

Data Input	Select Inputs		Outputs			
D	S_1	S_0	Y_3	Y_2	Y_1	Y_0
D	0	0	0	0	0	D
D	0	1	0	0	D	0
D	1	0	0	D	0	0
D	1	1	D	0	0	0

Circuit Diagram

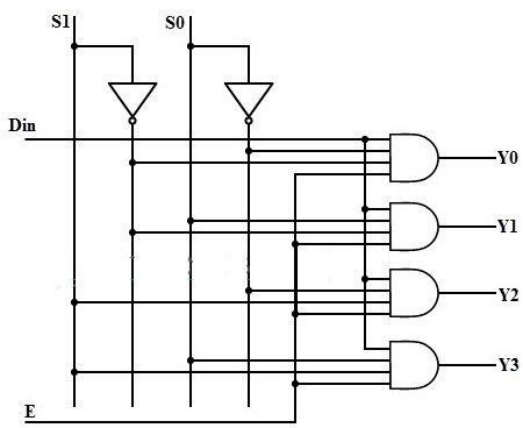

- A 1-to-4 de-multiplexer has a single input (D), two selection lines (S_1 and S_0) and four outputs (Y_0 to Y_3). The input data goes to any one of the four outputs at a given time for a particular combination of select lines.

- This de-multiplexer is also called as a 2-to-4 de-multiplexer which means that two select lines and 4 output lines.

- When S_1=0 and S_0= 0, the data input is connected to output Y_0 and when S_1= 0 and S_0=1, then the data input is connected to output Y_1.

$$Y0 = \overline{S1}\ \overline{S0}\ D$$

$$Y1 = \overline{S1}\ S0\ D$$

$$Y2 = S1\ \overline{S0}\ D$$

$$Y3 = S1\ S0\ D$$

- Where D is the input data, Y_0 to Y_3 are output lines and S_0 & S_1 are select lines.

- **1-8 De-multiplexer circuit**

Block Diagram

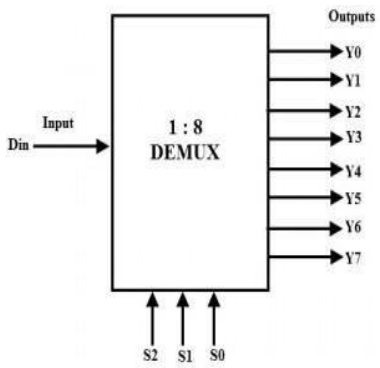

Truth Table

Data Input	Select Inputs			Outputs							
D	S_2	S_1	S_0	Y_7	Y_6	Y_5	Y_4	Y_3	Y_2	Y_1	Y_0
D	0	0	0	0	0	0	0	0	0	0	D
D	0	0	1	0	0	0	0	0	0	D	0
D	0	1	0	0	0	0	0	0	D	0	0
D	0	1	1	0	0	0	0	D	0	0	0
D	1	0	0	0	0	0	D	0	0	0	0
D	1	0	1	0	0	D	0	0	0	0	0
D	1	1	0	0	D	0	0	0	0	0	0
D	1	1	1	D	0	0	0	0	0	0	0

Circuit Diagram

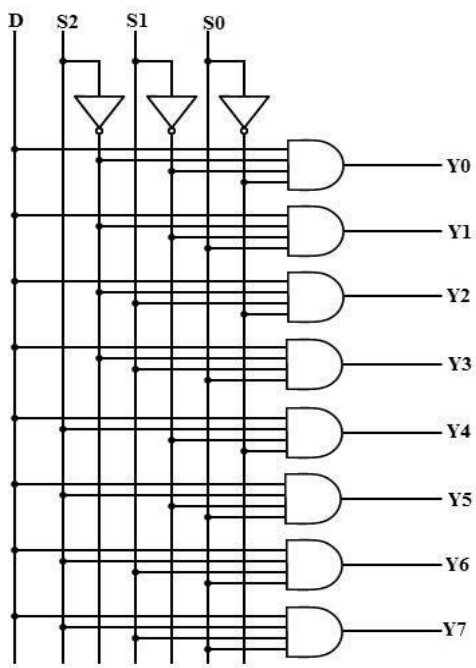

- 1-to-8 de-multiplexer circuit diagram uses 8 AND gates for achieving the operation. The input bit is considered as data D and it is transmitted to the output lines. This depends on the control input value of the S_2,S_1 and S_0.

- A 1-to-8 de-multiplexer that consists of single input D, three select inputs S2, S1 and S0 and eight outputs from Y0 to Y7.

- It is also called as 3-to-8 de-multiplexer due to three select input lines. It distributes one input line to one of 8 output lines depending on the combination of select inputs.

- For example, if $S_2S_1S_0$=000, then the input D is connected to the output Y0 and so on.
- From this truth table, the Boolean expressions for all the outputs can be written as follows.

$$Y0 = D\,\overline{S2}\,\overline{S1}\,\overline{S0}$$

$$Y1 = D\,\overline{S2}\,\overline{S1}\,S0$$

$$Y2 = D\,\overline{S2}\,S1\,\overline{S0}$$

$$Y3 = D\,\overline{S2}\,S1\,S0$$

$$Y4 = D\,S2\,\overline{S1}\,\overline{S0}$$

$$Y5 = D\,S2\,\overline{S1}\,S0$$

$$Y6 = D\,S2\,S1\,\overline{S0}$$

$$Y7 = D\,S2\,S1\,S0$$

Applications of De multiplexer

De multiplexers are used to connect a single source to multiple destinations. These applications include the following:

- **Communication System**

Mux and demux both are used in communication system to carry out the process of data transmission. A De-multiplexer receives the output signals from the multiplexer and at the receiver end it converts them back to the original form.

- **Arithmetic Logic Unit**

The output of the ALU is fed as an input to the De-multiplexer, and the output of the de-multiplexer is connected to a multiple register. The output of the ALU can be stored in multiple registers.

Encoder

Encoder is a combinational circuit which is designed to perform the inverse operation of the decoder. An encoder has n number of input lines and m number of output lines.

The purpose of encoder is standardization, speed, secrecy, security, or saving space by shrinking size

Generally, digital encoders produce outputs of 2-bit, 3-bit or 4-bit codes depending upon the number of data input lines. An "n-bit" binary encoder has 2^n input lines and n-bit output lines with common types that include 4-to-2, 8-to-3 and 16-to-4 line configurations.

Block diagram

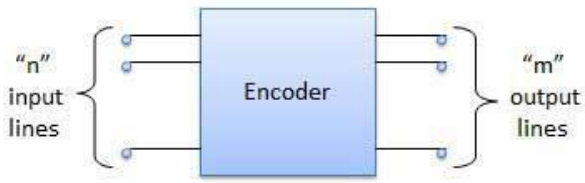

4-to-2 Bit Binary Encoder

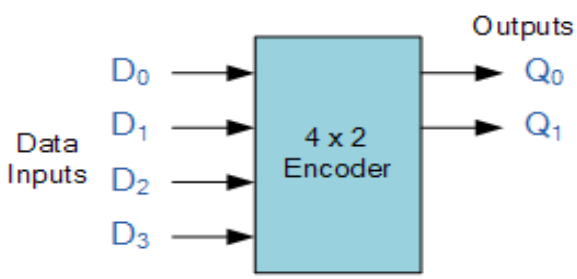

Inputs				Outputs	
D_3	D_2	D_1	D_0	Q_1	Q_0
0	0	0	1	0	0
0	0	1	0	0	1
0	1	0	0	1	0
1	0	0	0	1	1
0	0	0	0	x	x

The output Q_0 is 1 when either input D_1 or D_3 is 1, also the output Q_1 is set to 1 when either input D_2 or D_3 is 1.

Circuit Diagram

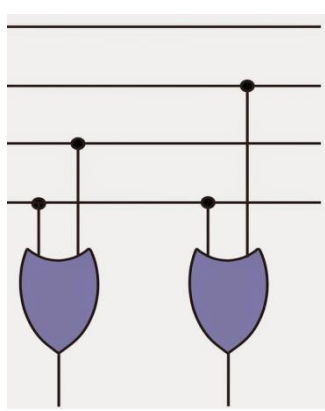

Decimal To BCD Encoder

A decimal to BCD encoder has 10 input lines D_0 to D_9 and 4 output lines Y_0 to Y_3. Below is the **truth table for a decimal to BCD encoder**.

Input										Output			
D_9	D_8	D_7	D_6	D_5	D_4	D_3	D_2	D_1	D_0	Y_3	Y_2	Y_1	Y_0
0	0	0	0	0	0	0	0	0	1	0	0	0	0
0	0	0	0	0	0	0	0	1	0	0	0	0	1
0	0	0	0	0	0	0	1	0	0	0	0	1	0
0	0	0	0	0	0	1	0	0	0	0	0	1	1
0	0	0	0	0	1	0	0	0	0	0	1	0	0
0	0	0	0	1	0	0	0	0	0	0	1	0	1
0	0	0	1	0	0	0	0	0	0	0	1	1	0
0	0	1	0	0	0	0	0	0	0	0	1	1	1
0	0	1	0	0	0	0	0	0	0	0	1	1	1
0	1	0	0	0	0	0	0	0	0	1	0	0	0
1	0	0	0	0	0	0	0	0	0	1	0	0	1

From the truth table, the outputs can be expressed by following Boolean Function.

Note: Below boolean functions are formed by ORing all the input lines for which output is 1. For instance Y_0 is 1 for D_1, D_3, D_5, D_7 & D_9 input lines.

$\mathbf{Y_0 = D_1 + D_3 + D_5 + D_7 + D_9}$

$\mathbf{Y_1 = D_2 + D_3 + D_6 + D_7}$

$\mathbf{Y_2 = D_4 + D_5 + D_6 + D_7}$

$\mathbf{Y_3 = D_8 + D_9}$

The decimal to BCD encoder can therefore be implemented with OR gates whose inputs are determined directly from truth table as shown in the image below.

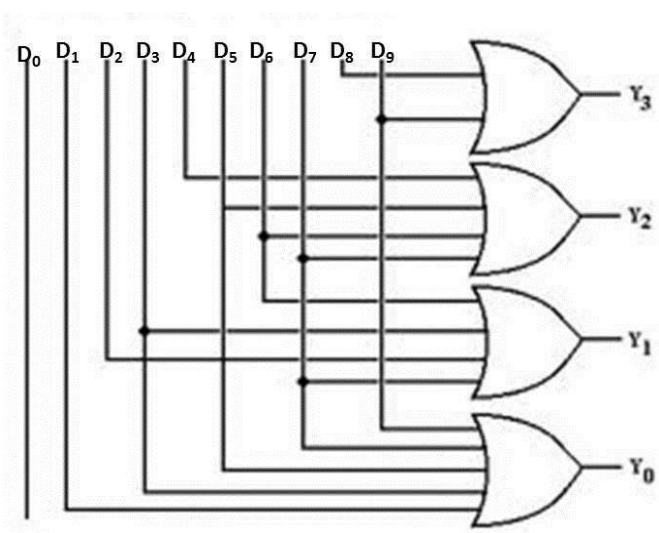

DECODER

Decoder is a combinational logic circuit that converts coded input to coded outputs provided both of these are different from one another.

The name decoder means translating of coded information from one format into another. So the input code generally has fewer bits than output code word.

A digital decoder converts a set of digital signals into corresponding decimal code. The encoded data is decoded for user interface in most of the output devices like monitors, calculator displays, printers, etc. once after the information is encoded by encoders.

Types-

a) 2-to-4 decoder
b) 3-to-8 decoder
c) 4-to-16 line binary decoder

2-to-4 Binary Decoder

In a 2-to-4 binary decoder, two inputs are decoded into four outputs hence it consists of two input lines and 4 output lines. Only one output is active at any time while the other outputs are maintained at logic 0 and the output which is held active or high is determined the two binary inputs A and B.

Block Diagram

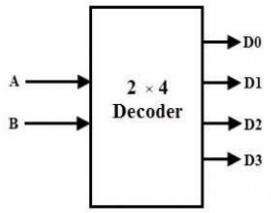

The outputs Y_0 through Y_3 are active high if enable input EN is active high (EN = 1). When both inputs A and B are low (or A= B= 0), the output Y0 will be active or High and all other outputs will be low.

When A = 0 and B = 1, the output Y_1 will be active and when A = 1 and B = 0, then the output Y_2 will be active. When both the inputs are high, then the output Y_3 will be high.

If the enable bit is zero then all the outputs will be set to zero.

Truth Table

Inputs			Outputs			
EN	A	B	Y_3	Y_2	Y_1	Y_0
0	×	×	0	0	0	0
1	0	0	0	0	0	1
1	0	1	0	0	1	0
1	1	0	0	1	0	0
1	1	1	1	0	0	0

From the above truth table we can obtain Boolean expression for the each output as

$Y0 = \overline{A}\,\overline{B}$

$Y1 = \overline{A}\,B$

$Y2 = A\,\overline{B}$

$Y3 = A\,B$

These expressions can be implemented by using basic logic gates. Thus, the logic circuit design of the 2-to-4 line decoder is implemented by using NOT and AND gates. Two NOT gates or inverters provide the complement of inputs.

Circuit Diagram

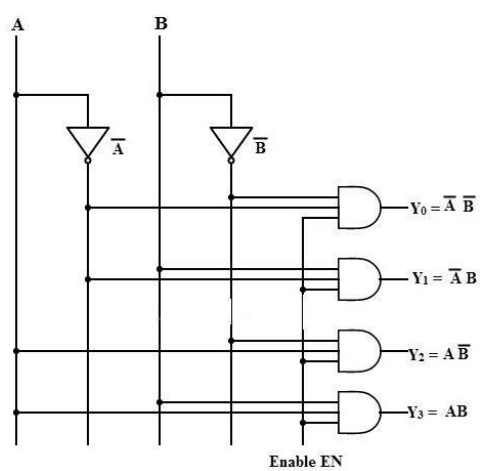

ADDER

A combinational circuit that performs the arithmetic addition is called an Adder.
There are two types of adder:
a) Half Adder
b) Full Adder

a) Half Adder

Half adder is a combinational logic circuit with two inputs and two outputs. The half adder circuit is designed to add two single bit binary number A and B.

It is the basic building block for addition of two **single** bit numbers. This circuit has two outputs **carry** and **sum**.

Block diagram

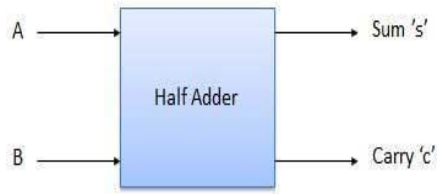

Truth Table

Inputs		Output	
A	B	S	C
0	0	0	0
0	1	1	0
1	0	1	0
1	1	0	1

Circuit Diagram

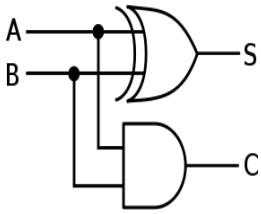

b) Full Adder

Full adder is developed to overcome the drawback of Half Adder circuit. It can add two one-bit numbers A and B, and carry C. The full adder is a three input and two output combinational circuit.

Truth Table

A	B	C_{in}	SUM (S)	C_{out}
0	0	0	0	0
0	0	1	1	0
0	1	0	1	0
0	1	1	0	1
1	0	0	1	0
1	0	1	0	1
1	1	0	0	1
1	1	1	1	1

Block diagram

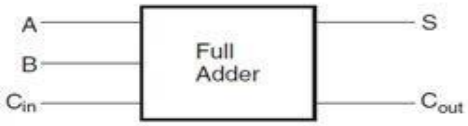

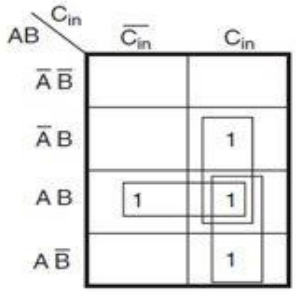

$C_{out} = AB + BC_{in} + AC_{in}$

(K-MAP for Carry-Output)

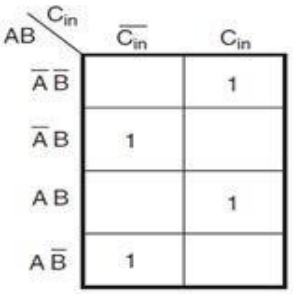

$$S = \overline{A}.\overline{B}.C_{in} + \overline{A}.B.\overline{C}_{in} + A.\overline{B}.\overline{C}_{in} + A.B.C_{in}$$

(K-MAP for Sum)

Circuit Diagram

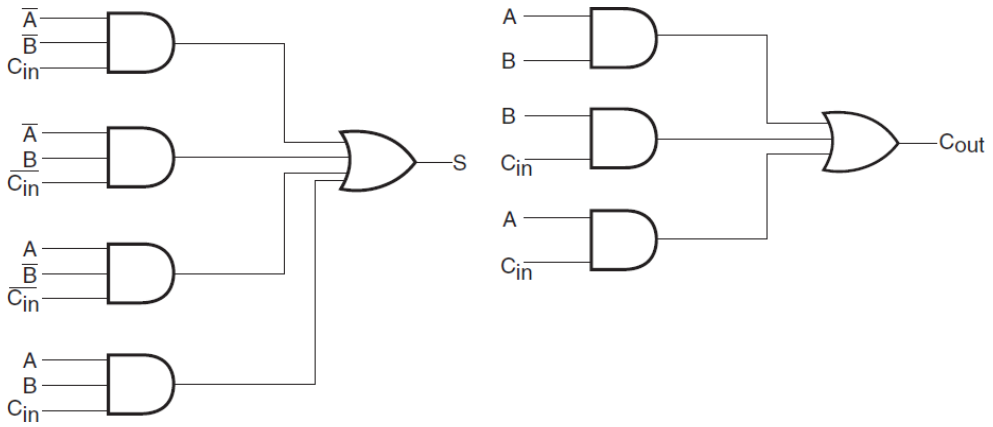

4 Bit Parallel Adder / 4-Bit Binary Adder

In the block diagram, A_0 and B_0 represent the LSB of the four bit words A and B. Hence Full Adder-0 is the lowest stage. Hence its C_{in} has been permanently made 0. The rest of the connections are exactly same as those of n-bit parallel adder.

Block diagram

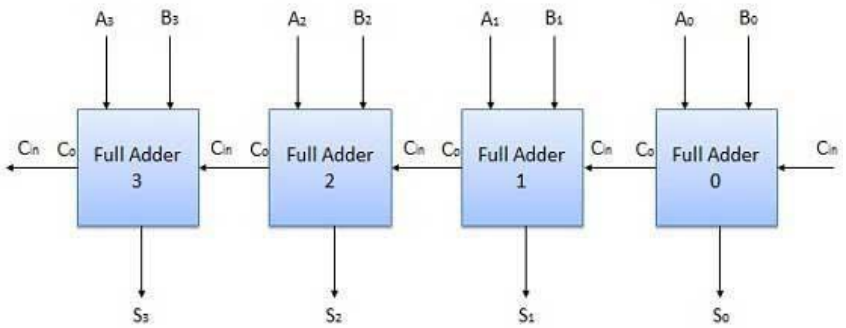

Binary Adder

- A binary adder is a digital circuit that produces the arithmetic sum of two binary numbers. It can be constructed with full adder connected in cascade, the output carry from each full adder connected to the input carry of the next full adder in the chain.

- The interconnection of four full adder (FA) circuits to provide a 4-bit binary ripple carry adder. The augends bits of A and addend bits of B are designated by subscript numbers from right to left, with subscript 0 denoting the least significant bit.

- The carries are connected in the chain through the full adders. The input carry to the adder is C_0 and it ripples through the full adder to the output carry C_4.

- The S output generate the required sum bits. An n-bit adder requires n full adders with each output connected to the input carry of the next higher order full adder.

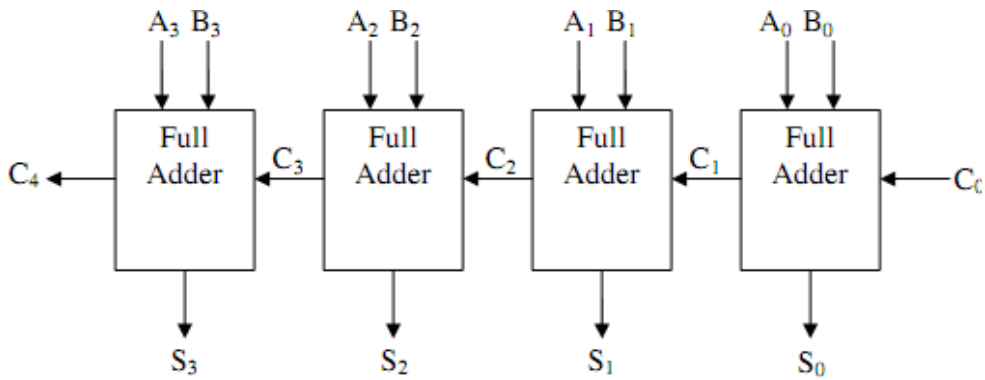

fig: 4-bit adder

- The carries are connected in a chain through the full adders. The input carry to the binary adder is C_0 and the output carry is C_4. The S output of the full adders generate the required sum bits.

Subtractors

Subtractor is an electronic logic circuit for calculating the difference between two binary numbers, the minuend and the number to be subtracted, the subtrahend.

Types-
1) Half Subtractor
2) Full Subtractor

Half Subtractors

Half Subtractor is a combination circuit with two inputs(minuend and subtrahend) and two outputs (difference and borrow).

It produces the difference between the two binary bits at the input and also produces an output (Borrow) to indicate if a 1 has been borrowed. In the subtraction (A-B), A is called as Minuend bit and B is called as Subtrahend bit.

Block Diagram

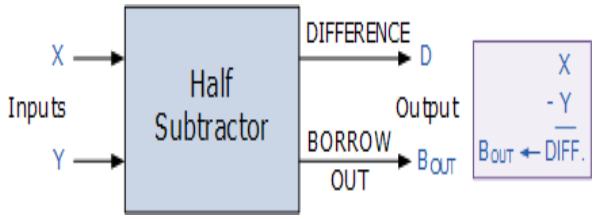

Truth Table

Inputs		Output	
A	B	(A – B)	Borrow
0	0	0	0
0	1	1	1
1	0	1	0
1	1	0	0

Circuit Diagram

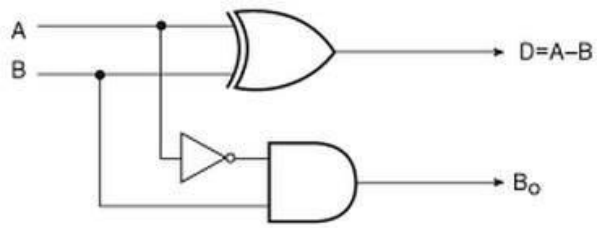

Full Subtractors

Full subtractor is a combinational circuit capable of performing subtraction on two bits namely minuend and subtrahend. It accepts three inputs: minuend, subtrahend and a borrow bit. It produces two outputs: difference and borrow.

The full subtractor is a combinational circuit with three inputs A,B,C and two output D(A-B-C) and C'. A is the 'minuend', B is 'subtrahend', C is the 'borrow' produced by the previous stage, D(A-B-C) is the difference output and C' is the borrow output.

Truth Table

Minuend (A)	Subtrahend (B)	Borrow In (B_{in})	Difference (D)	Borrow Out (B_o)
0	0	0	0	0
0	0	1	1	1
0	1	0	1	1
0	1	1	0	1
1	0	0	1	0
1	0	1	0	0
1	1	0	0	0
1	1	1	1	1

Block Diagram

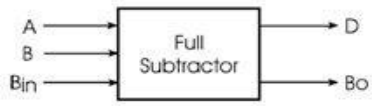

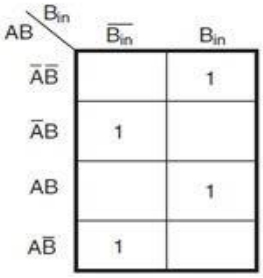

$$D = \overline{A}.\overline{B}.B_{in} + \overline{A}.B.\overline{B}_{in} + A.\overline{B}.\overline{B}_{in} +$$

(Difference)

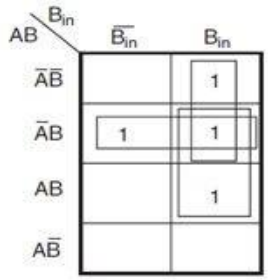

$B_0 = AB_{in} + AB + BB_{in}$

(Borrow)

Logic Diagram

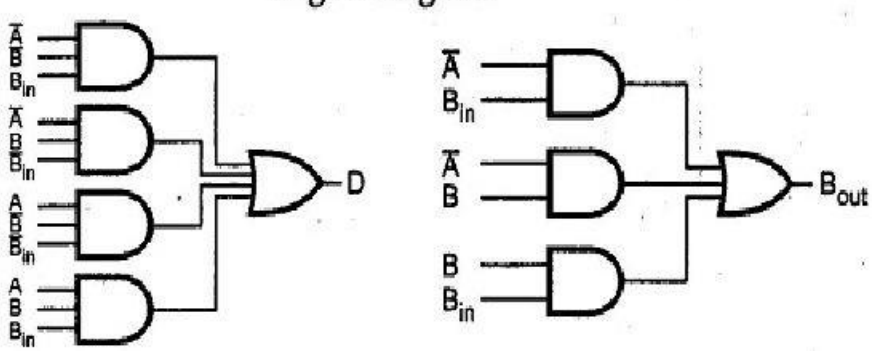

4-Bit Adder-Subtractor

OR

Implement a full subtractor circuit with a decoder and two OR gates.

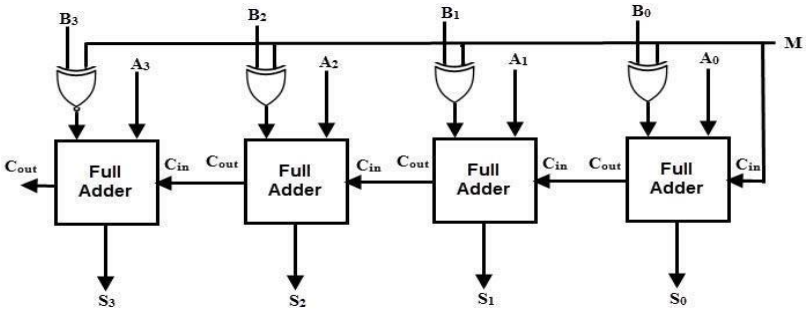

fig. 4-bit Adder-Subtractor

- The addition and subtraction operations can be combined into one circuit with one common binary adder. This is done by including an EX-OR gate with each full adder.

- The mode input M controls the operation.

- When M = 0, the circuit is an adder, and when M = 1, the circuit becomes a subtractor. Each EX-OR gate receives input M and one of the inputs of B.

- When M = 0, we have B (Ex-OR) 0 = B. the full adder receive the value of B, the input carry is 0, and the circuit performs A plus B.

- When M = 1, we have B (Ex-OR) 1= B' and C_{in} = 1.
  $1 \oplus B = B'$ and $0 \oplus B = B$

- The B inputs are complemented and a 1 is added through the input carry. The circuit performs the operation A plus the 2's complement of B i.e. (A-B)

- The subtraction A - B can be performed by taking the 2 ' s complement of B and adding it to A as A- B = A + (-B)