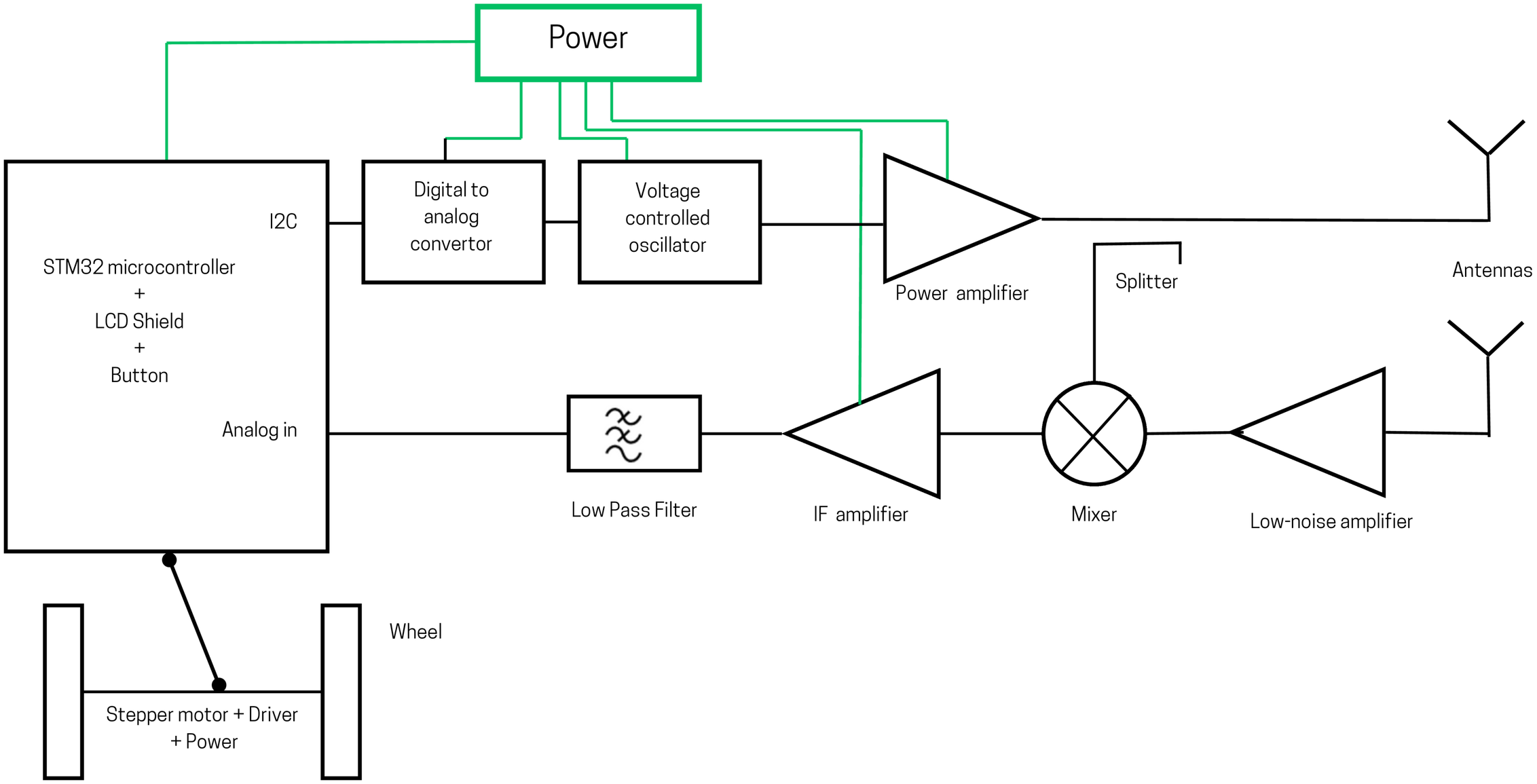
Power
I2C
STM32 microcontroller
+
LCD Shield
+
Button
Analog in
Digital to analog convertor
Voltage controlled oscillator
Power amplifier
Antennas
Splitter
Low Pass Filter
IF amplifier
Mixer
Low-noise amplifier
Wheel
Stepper motor + Driver + Power