EDL 2025

SKORK
The Compact Ground Penetrating Radar System

Built by,
MON-12, EDL-13 team

TABLE OF CONTENTS

01 INTRODUCTION

02 PROBLEM & SOLUTION

03 METHODOLOGY

04 TECHNICAL ASPECTS

05 GANTT CHART

06 KEY RISKS & MITIGATION STRATEGIES

07 DELIVERABLES

INTRODUCTION 01

THE POTENTIAL

- Penetrate various materials, including soil, rock, and concrete
- Travel long distances
- Provide detailed information about hidden objects

THE NEED

- Alternative to invasive discovery methods
- “An X-Ray for the ground”
- Limited access to small-scale users like students

PROBLEM & SOLUTION 02

Problem we're trying to solve

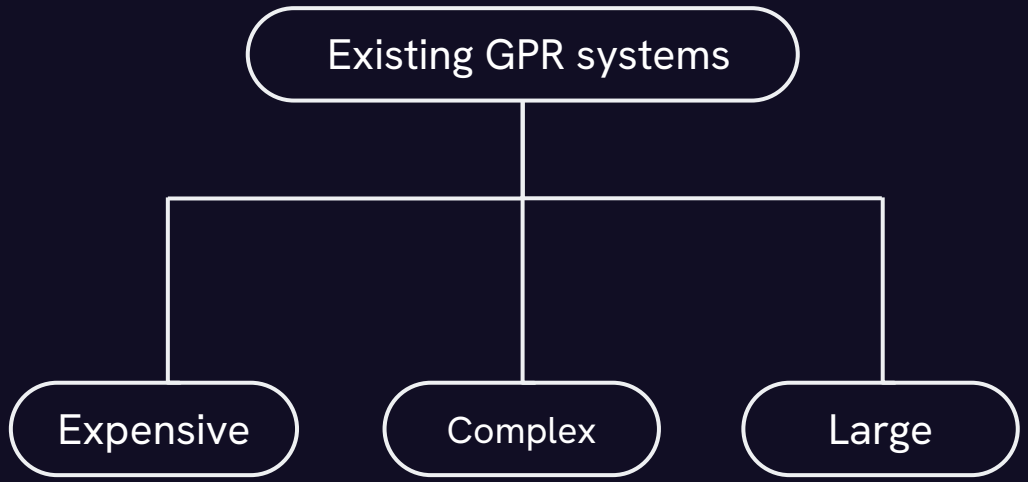

Solution

Use of COTS (Commercial Off-The-Shelf) Components:

- Leveraging widely available, cost-effective components, to significantly reduce production costs and make the system affordable for students, educators, and researchers

Lightweight & Portable Design:

- The use of a plastic body and other lightweight materials ensures that the system is compact, durable, and easy to carry for real-time subsurface exploration

User-Friendly Interface:

- Designed with simplicity in mind, such that it requires no extensive technical expertise to operate it

VALUE PROPOSITION

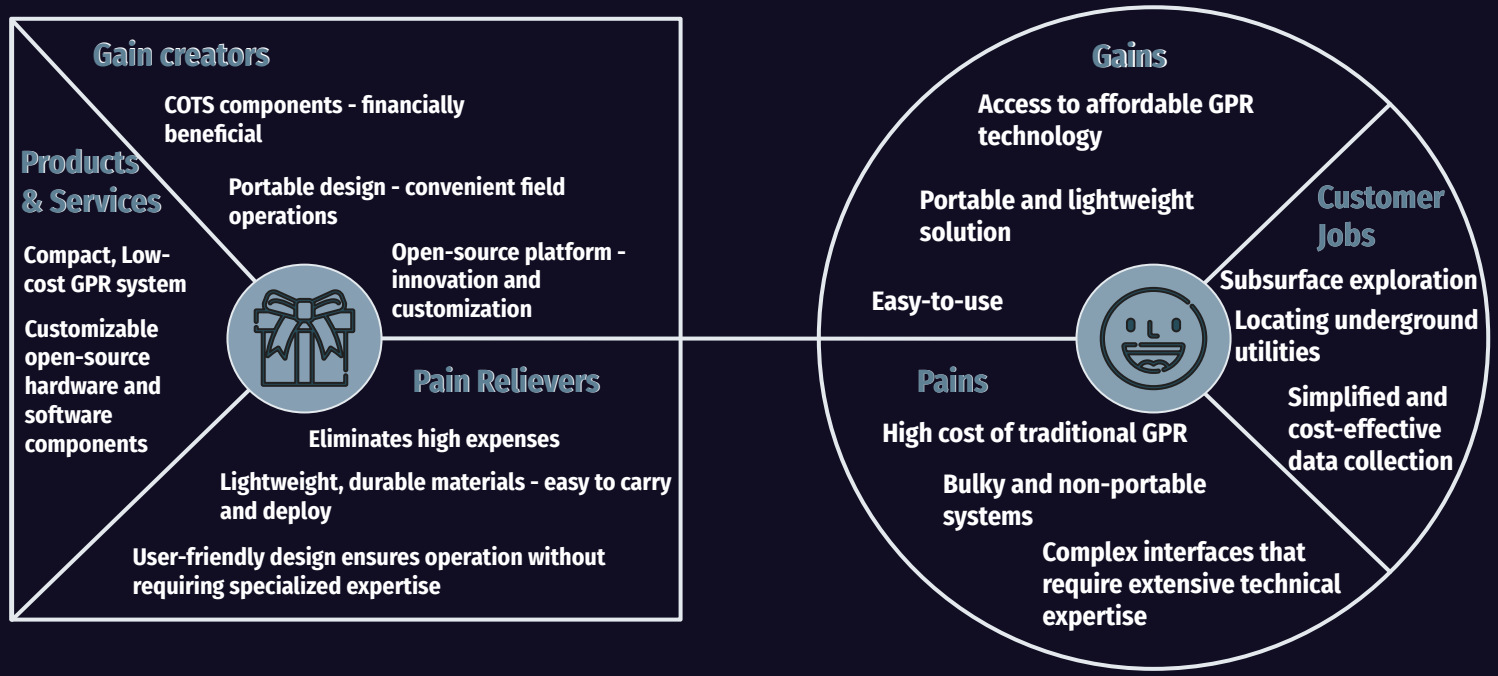

METHODOLOGY 03

SIMULATION/ANTENNA

Simulation of boards
Signal processing algorithm development
Data visualization
Antenna design

BREADBOARD TESTING

Breadboard validating of the simulations with the components procured

PCB DESIGNING

Designing and fabricating a custom PCBs for LF and RF functions

BOARD TESTING

Prototyping the board and testing the board for the target specifications

FIRMWARE

Developing the embedded firmware required for the microcontroller to carry out the required function

INTEGRATION

Integrating the hardware, firmware and software, testing them and debugging

TECHNICAL ASPECTS 04

PRINCIPLE OF OPERATION

- The system continuously transmits a fixed-frequency RF signal into the ground
- As the radar system moves over different subsurface regions, reflections from varying depths are received
- Due to the relative motion between the radar and subsurface objects, the frequency of the received signal is shifted (Doppler Effect)
- The transmitted and received signals are combined using a mixer
- The resulting signal contains components at both the sum and difference frequencies
- A bandpass filter (or low-pass filter) is applied to isolate the beat frequency component, which represents the difference between transmitted and received frequencies

PRINCIPLE OF OPERATION

- The beat frequency is directly proportional to the time delay between signal transmission and reception:

$$t=2d/c$$

- Here, d is the depth, and c is the speed of electromagnetic waves in the medium
- The system also captures the amplitude of the received signals, which provides information about the material properties of subsurface objects
- The output waveform plots depth vs. distance, where the amplitude variations at each depth are visualized along the scanned path, providing a clear subsurface map

BLOCK DIAGRAM

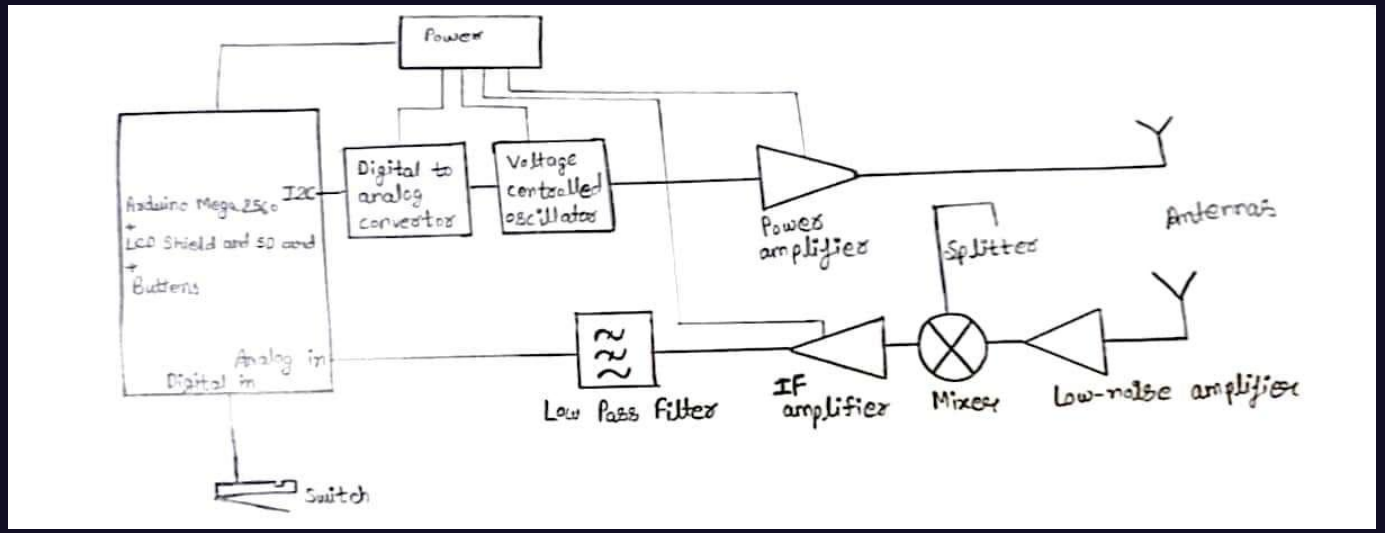

CIRCUIT DIAGRAM - RF BOARD

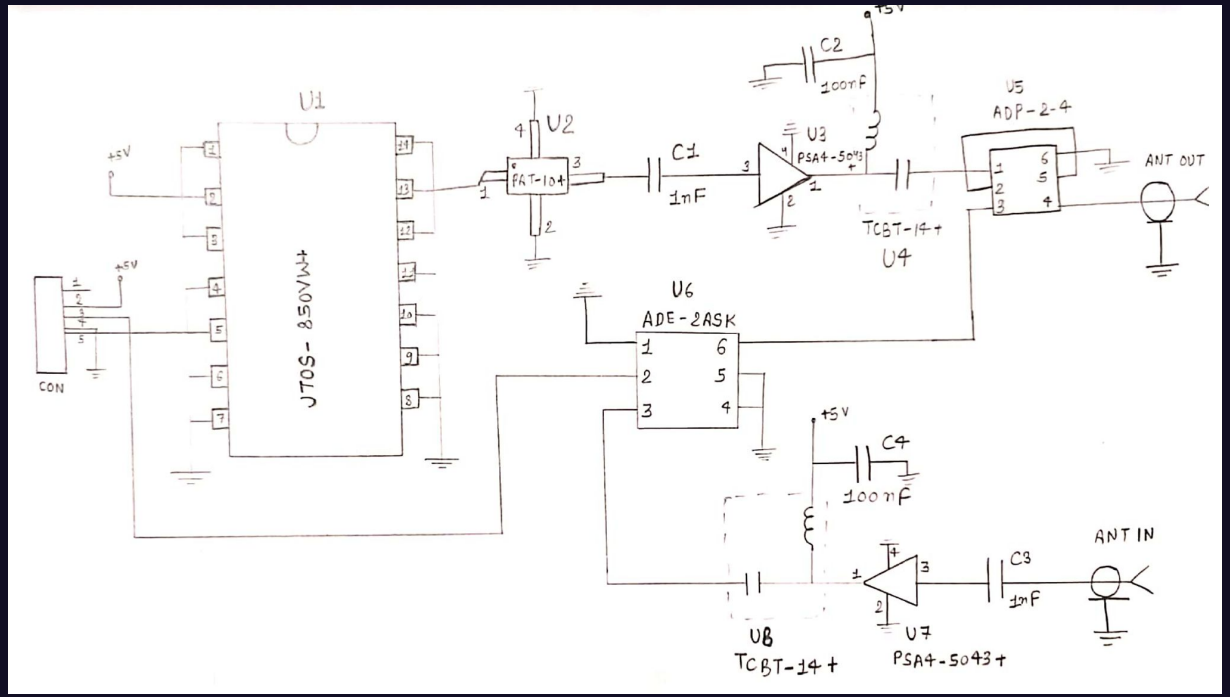

CIRCUIT DIAGRAM - LF BOARD

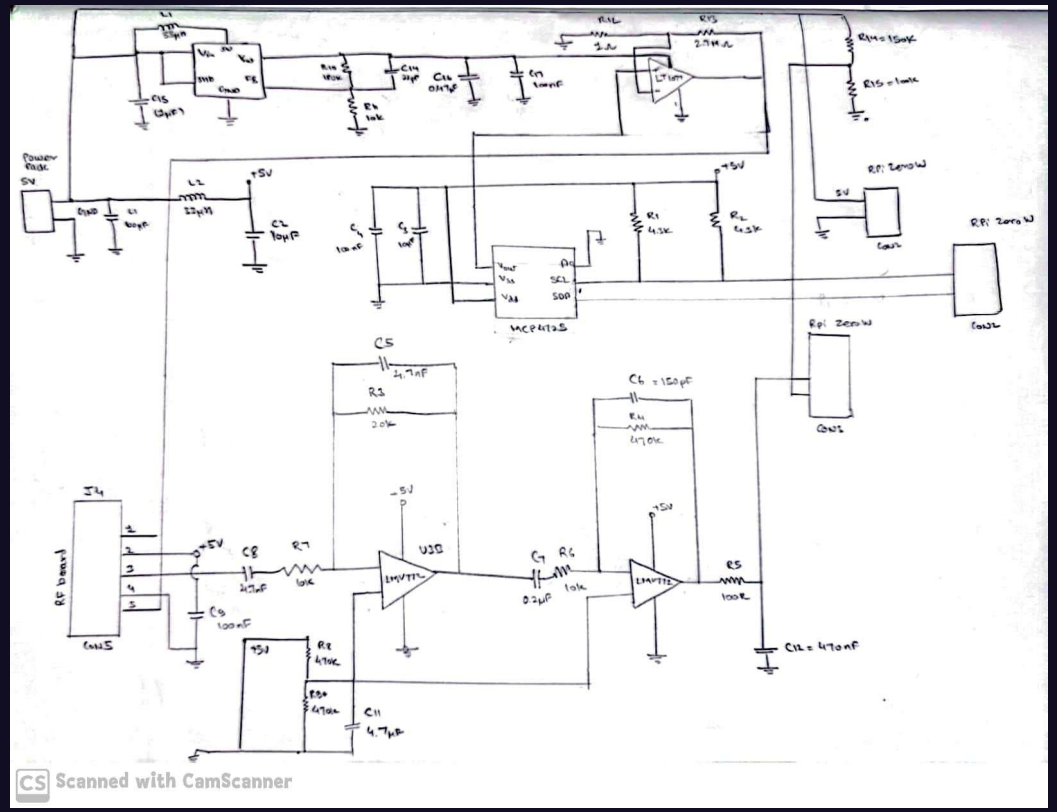

ANTENNA SPECIFICATIONS

Dielectric of Substrate	4.7	
Height of Dielectric [mm]	1.5	
System Impedance [Ω]	50.0	
Minimum Frequency [MHz]	350	-10 +10 -100 +100
Maximum Frequency [MHz]	1050	(educated guess)
CALCULATE		
Width of Antenna W [mm]	507.73	
Height of Antenna L [mm]	609.27	
Width of the Trasmission Feeder [mm]	5.217	
Length of the Trasmission Feeder [mm]	101.55	(not critical)
Major Axis S1 [mm]	507.73	
Minor Axis R1 [mm]	256.47	
Circle Radius R2 [mm]	251.26	

GANTT CHART

05

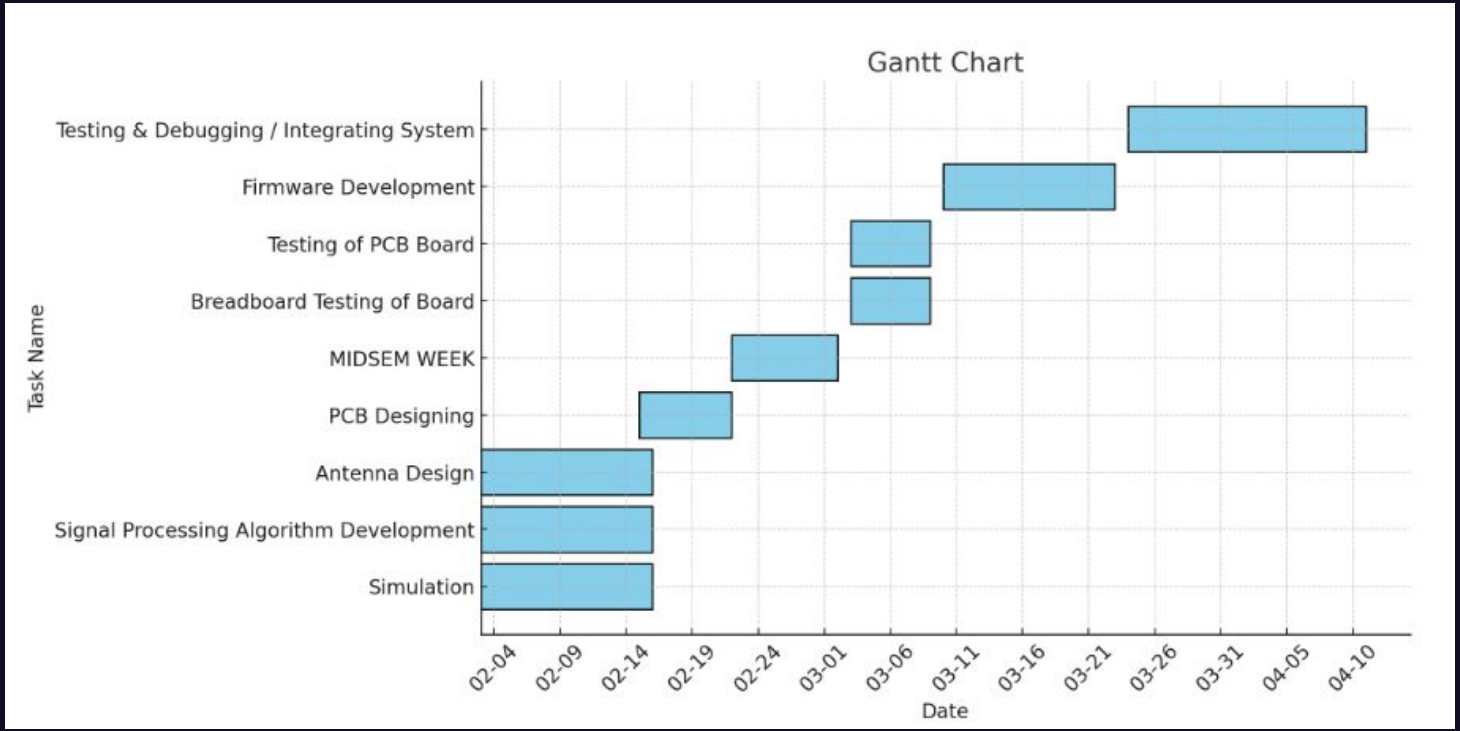
Gantt Chart
Testing & Debugging / Integrating System
Firmware Development
Testing of PCB Board
Breadboard Testing of Board
MIDSEM WEEK
PCB Designing
Antenna Design
Signal Processing Algorithm Development
Simulation
Task Name
02-04
02-09
02-14
02-19
02-24
03-01
03-06
03-11
03-16
03-21
03-26
03-31
04-05
04-10
Date

WORK DISTRIBUTION

Simulations	Kanak & Ramya
Signal Processing Algorithm Design	Shiwani & Khushbu
Antenna Design	Oviya
Hardware Testing	Oviya
PCB Design	All
Firmware	Shiwani & Khushbu
Testing & Debugging	All

KEY RISKS & MITIGATION STRATEGIES

06

RISKS	MITIGATION
• High attenuation in conductive materials (e.g., wet soils, clay, saltwater, rebar in concrete) • Frequency-dependent penetration issues: high-frequency signals (for resolution) attenuate faster than low-frequency signals (for depth)	Conduct multi-band(a range of frequencies) GPR scans to balance depth and resolution.
• External EMI from power lines, radio signals, or electronic equipment • Internal noise from GPR hardware, cables, or environmental vibrations	Using appropriate signal processing techniques and band pass filters to remove noise

DELIVERABLES 07

- Interactive interface allowing users to select the ground type (soil, stone, concrete, etc.) and input the desired scanning depth, automatically optimizing system settings
- Real-time graphical visualization mapping subsurface objects, cracks, or distortions by plotting signal intensities across depths and distances
- Fully functional prototype with a built-in display for real-time scan data visualization without requiring external devices
- Compact, lightweight, and durable design for easy portability and suitability for diverse terrains

THANK YOU