EDL 2025

Milestone 2 - SKORK: The Compact Ground Penetrating Radar System

Being Built by,
MON-12, EDL-13 team

TABLE OF CONTENTS

01 FEEDBACK ADDRESSAL

02 PROJECT MANAGEMENT PLAN

03 PROGRESS ACHIEVED

04 BLOCK DIAGRAMS

05 ANALYSIS, SIMULATION AND KEY INSIGHTS

TABLE OF CONTENTS

06 CIRCUIT DIAGRAMS

07 TESTING STRATEGY

08 PRELIMINARY TESTING AND OBSERVATION

09 PLANS FOR THE NEXT MILESTONE

10 IMPORTANT REFERENCES

FEEDBACK ADDRESSAL

01

RECEIVED FEEDBACK

- Gain a Clear Understanding of the Operating Principles
- Simulate the Complete System in MATLAB & Visualize the Output
- If an Open-Source Dataset is Available, Begin Developing the Signal Processing Algorithm
- Identify and Analyze Key Parameters of Major System Components

CONTD...

- Develop a Dual-Approach Strategy:
  - Plan A: Follow previous references to design the entire system from scratch.
  - Plan B: Utilize a pre-built RF module and integrate it with the rest of the system.

OUR ADDRESSAL STRATEGY

1. We had meetings with Prof. Jayanta Mukherjee and Prof. Shalabh Gupta along with a lot of references visited, now we have a good understanding of the working principle and the algorithm
2. MATLAB simulation has been carried out and the simulated results are satisfactory as they are matching with the standard plots
3. We found out one open dataset was found, however the file format (.sgy) was not a common format. We're trying to understand how to use that.

PROJECT MANAGEMENT PLAN AND DOCUMENTATION

02

MILESTONE 2

TEAM 1

Antenna simulation and understanding

Using Ansys HFSS

TEAM 2

Simulation of parts of RF Board

Using GNU Radio & USRP, MATLAB

TEAM 3

Understanding and simulating LF Board

Using LTspice

OVERVIEW

1. RF and LF PCB design
2. Component testing
3. Firmware development for our radar system
4. Signal processing algorithm for extracting the phase information and data visualization
5. Calibration, consideration factors like antenna coupling
6. Integration and debugging of system

DOCUMENTATION

1. **LTspice:**
   - Simulations of the band pass filter and boost convertor performed
   - Bandwidth of the band pass filter LTspice is 600 Hz
2. **MATLAB:**
   - Modelled a step-frequency continuous wave ground penetrating radar system operating from 400MHz to 1 GHz
   - Considered soil with a relative permittivity of 9
   - Detected target depths (0.5, 1.2105, 2.1053) seem to be good
3. **GNU Radio:**
   - Built RF board blocks which included a signal source, a VCO, and an array for 256 step frequency generation, frequency sweep from 500 MHz to 1 GHz

DOCUMENTATION

- Used two USRP one as TX and other as RX, with center frequency 1 GHz
- Used monopole antenna available in wel lab
- Used Low pass filter of 10kHz cutoff

4. **Ansys HFSS:**
   - Designing of the basic Vivaldi Antenna is done
   - Microstrip calculation and positioning is yet to be understood clearly and completed

PROGRESS ACHIEVED

03

GANTT CHART

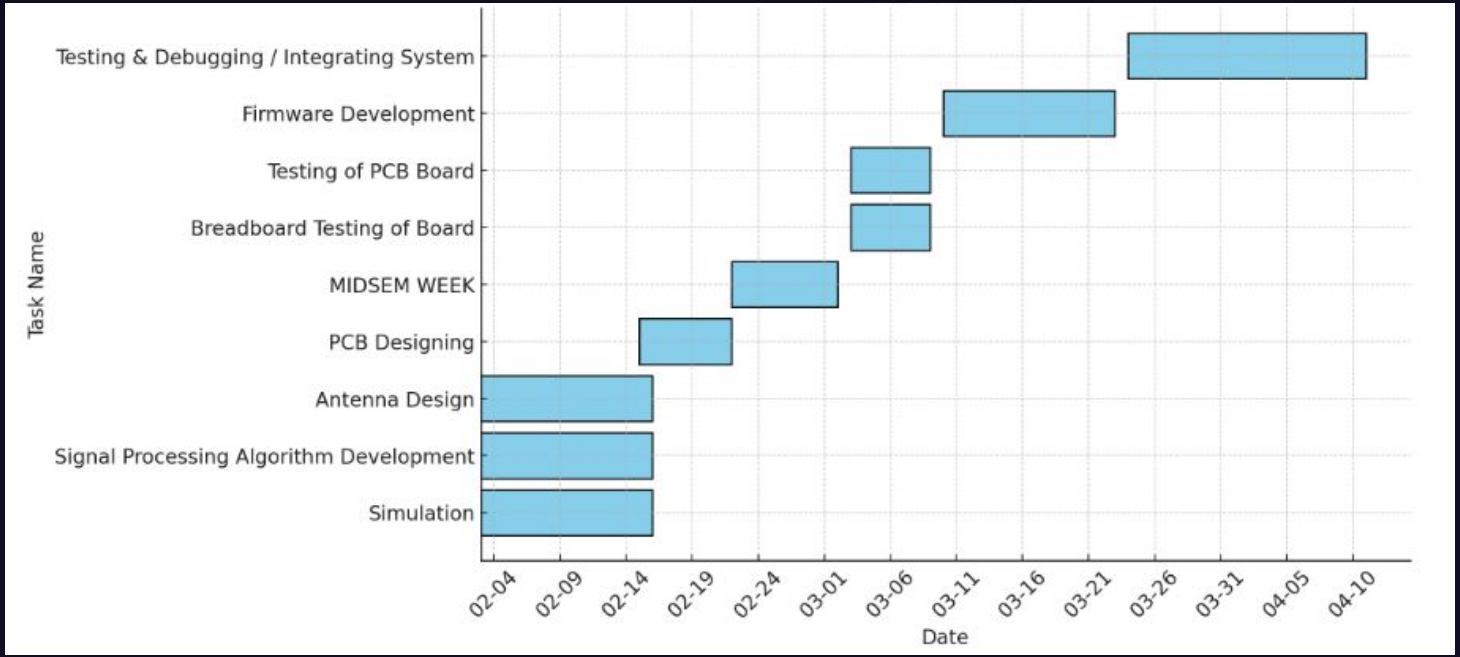
Testing & Debugging / Integrating System
Firmware Development
Testing of PCB Board
Breadboard Testing of Board
MIDSEM WEEK
PCB Designing
Antenna Design
Signal Processing Algorithm Development
Simulation
Task Name
02-04
02-09
02-14
02-19
02-24
03-01
03-06
03-11
03-16
03-21
03-26
03-31
04-05
04-10
Date

PROGRESS ACHIEVED AGAINST THE GANTT CHART

- **RF BOARD SIMULATIONS:**
  - Performed software simulations of principle/RF board
  - Understood the working and challenges we might face

- **CONCEPTUAL UNDERSTANDING:**
  - Read reference papers online and trying to understand the mechanism and algorithm
  - Discussing with Professor Shalabh Gupta and TAs and got our doubts clear, building on the existing knowledge on the working mechanism

- **LF BOARD SIMULATIONS:**
  - Performed simulations of two main parts of the LF Board - Boost Converter and Band Pass Filter.
  - Analysed variations in the output based on the changes in the input
  - Understood how the bandwidth and gain of the bandpass filter changes with the resistor values

- **UNDERSTANDING AND ANALYSING ANTENNA:**
  - Understood the need for an Antipodal Vivaldi Antenna for the project
  - Learning Ansys HFSS and tried building and simulating the antenna to understand dimensional influence on the bandwidth, gain, and radiation pattern of the antenna

DEVIATIONS FROM THE ORIGINAL PLAN

- **SIGNAL PROCESSING:**
  - Could not work on the signal processing part
  - Due to the excess time spent on building conceptual clarity discussing with the TAs and Professors than expected

- **ANTENNA**
  - We are still in the process of fully understanding the calculations for certain parameters, such as microstrip width, length, and positioning
  - This is primarily because we are working with an Antipodal Vivaldi Antenna for the first time, and gaining clarity on these design aspects requires careful study and validation

BLOCK DIAGRAMS

04

PRINCIPLE OF OPERATION

- The core principle relies on the reflection of electromagnetic waves caused by non-uniform objects, leading to variations in electrical permittivity
- These variations result in a strong reflection of the RF signal, which carries time delay information, which is directly proportional to the depth of the subsurface object
- The dielectric constant(s) and conductivity of the material(s) determines the strength of the reflected signal. For example, when a pulse moves from an area of sandy soil (e.g., with a dielectric constant of 4) to a fresh root (e.g., with a dielectric constant of 13.8), it produces a very strong reflection.

CONTD...

- The reflective intensity depends on the reflective coefficient, which can be obtained by calculating the relative dielectric constants of the two mediums at the interface:

$$R = \frac{\sqrt{\varepsilon_1} - \sqrt{\varepsilon_2}}{\sqrt{\varepsilon_1} + \sqrt{\varepsilon_2}}$$

Where R is the reflection coefficient,
$\varepsilon 1$ is the dielectric constant of medium 1, and
$\varepsilon 2$ is the relative dielectric constant of medium 2

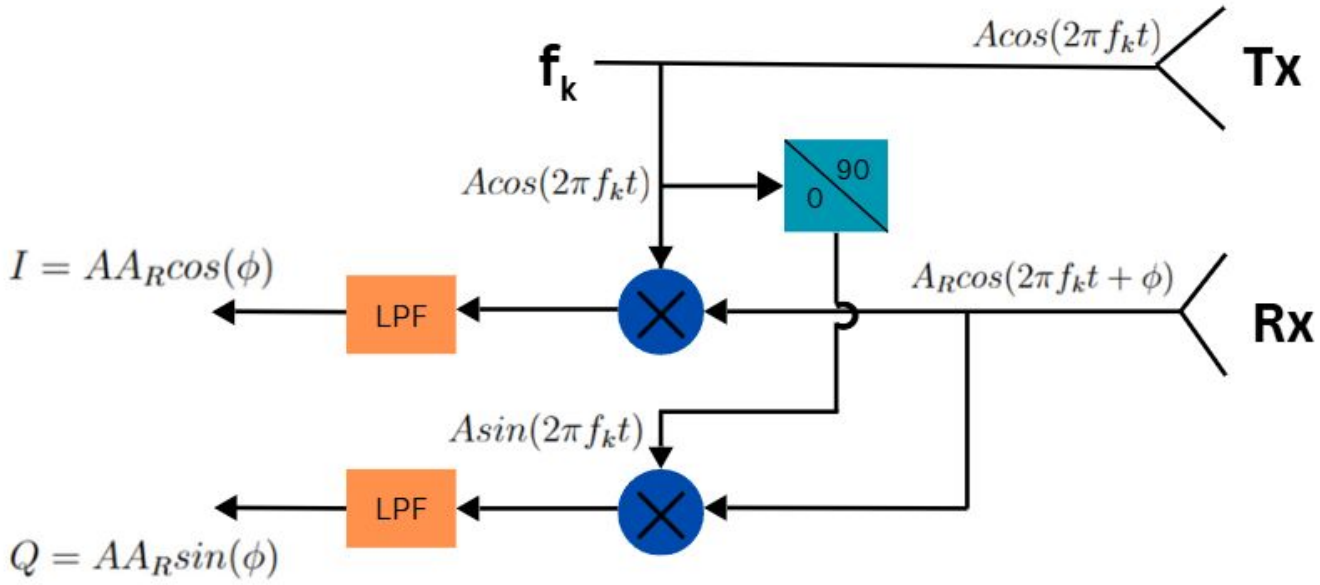

$$A_R = \frac{\sqrt{I^2 + Q^2}}{A} \qquad \phi = tan^{-1}(\frac{Q}{I})$$

CONTD...

- The **horizontal resolution** is defined as the size of the smallest target that can be horizontally detected
- The horizontal resolution of a GPR depends on the **first Fresnel radius** (r_f)
- When the spacing between the transmitting and receiving antennas is much smaller than the distance of the antennas from the target, the first Fresnel radius (rf) can be calculated as -

$$r_f = \sqrt{(h + \lambda/4)^2 - h^2} = \sqrt{\lambda h/2}$$

Where h is the depth of the target and λ is the length of the radar subwave.

- The GPR can **only distinguish two targets** when the distance between them is greater than the first Fresnel radius. The horizontal resolution decreases with the depth of an object and it depends on the wavelength of an electromagnetic wave
- The **vertical resolution** (generally approximated to half the wavelength on an electromagnetic wave in the medium) of a GPR depends on the ability to distinguish two signals that were emitted at different time intervals. The vertical interval is expressed by equation:

$$\Delta h = \frac{v\Delta t}{2} \frac{v}{2B_{eff}}$$

Where Δh is the vertical resolution, Δt is the time interval between two adjacent signals, v is the propagation speed of the electromagnetic wave in the medium and B_{eff} is the effective radar bandwidth.

- **Stepped frequency Radar:**
  - A **frequency domain approach** is the stepped-frequency method
  - The GPR transmits a steady tone of a certain frequency and records the magnitude and phase of the reflection
  - Next, this measurement is repeated at equally spaced frequencies, scanning a certain band
  - A wider band increases range resolution, and measuring frequencies closer together decreases range ambiguity
  - The many tuning operations required for each scan can take considerable time, so a reasonable scan rate during a GPR survey can be difficult to achieve
  - Often, these frequency-domain samples are transformed into the time-domain to obtain the response versus time.

- **Hyperbolas in the display:**
  - When using Ground Penetrating Radar (GPR), the detected objects often appear as hyperbolas on the radargram
  - This happens due to the way electromagnetic waves interact with buried objects and how the GPR antenna moves over them
  - As the antenna moves over an object, the vertical distance (time of the reflected signal to arrive at the antenna) decreases until the antenna is above the object, and it increases as the antenna moves past the object; therefore, a single object will appear in the GPR output data as a hyperbola
  - The target is located at the peak of the hyperbola

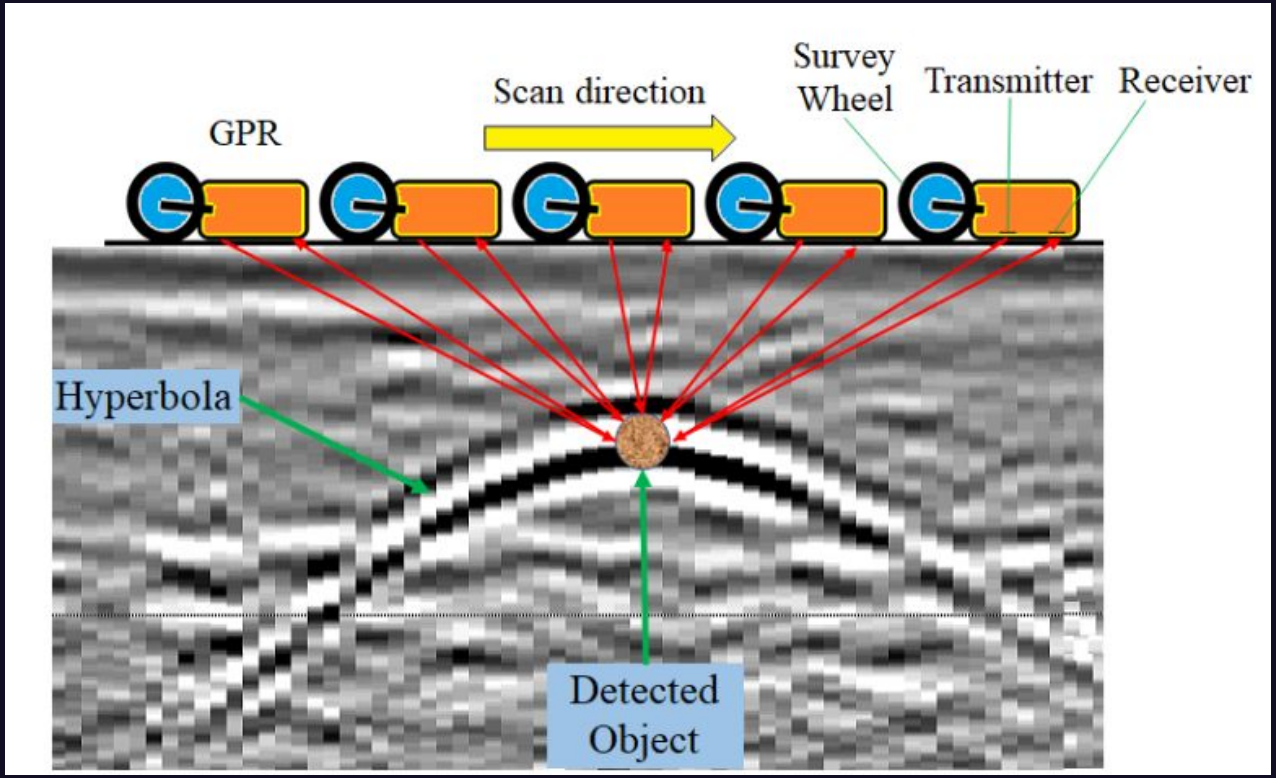
GPR
Scan direction
Survey Wheel
Transmitter
Receiver
Hyperbola
Detected Object

HARDWARE IMPLEMENTATION

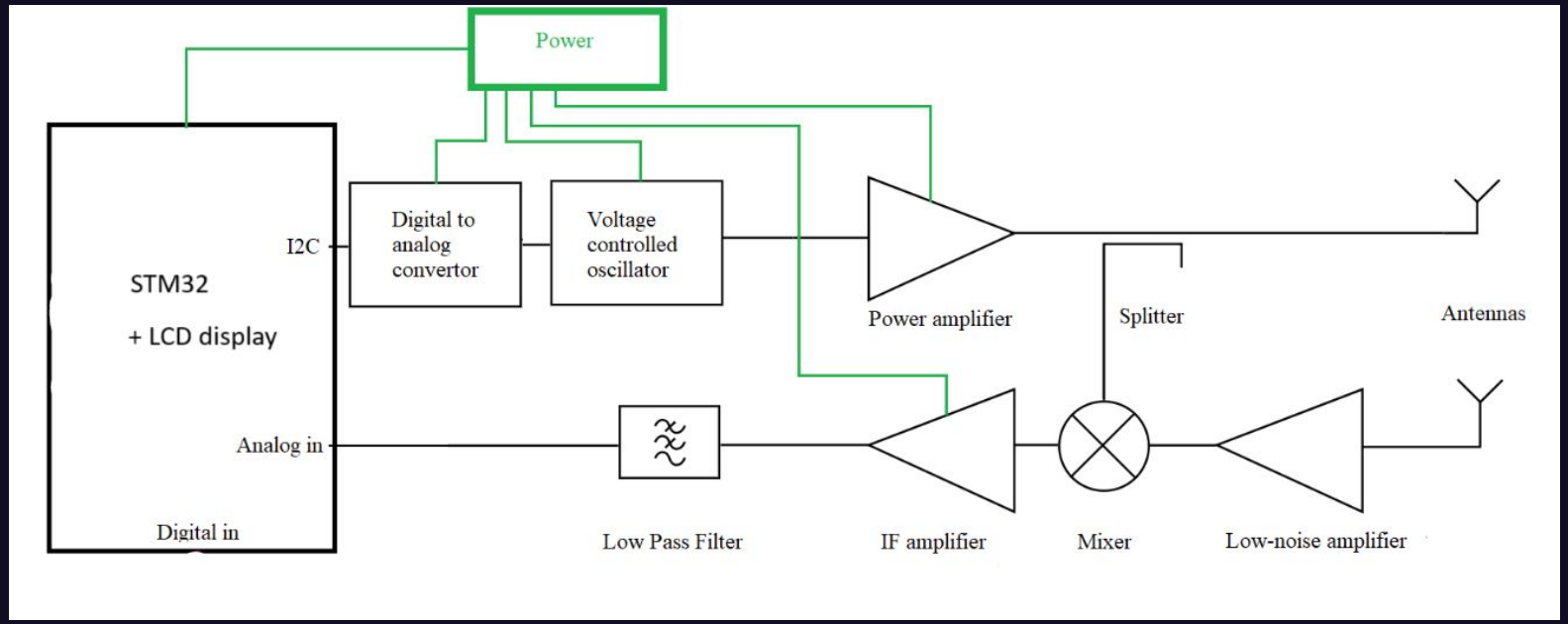

DATA ACQUISITION

At each horizontal resolution point or scan point we'll sweep 256 step frequencies and store data of phase, amplitude(of received signal), frequency in a array for signal processing and output data visualization and following is the flow:

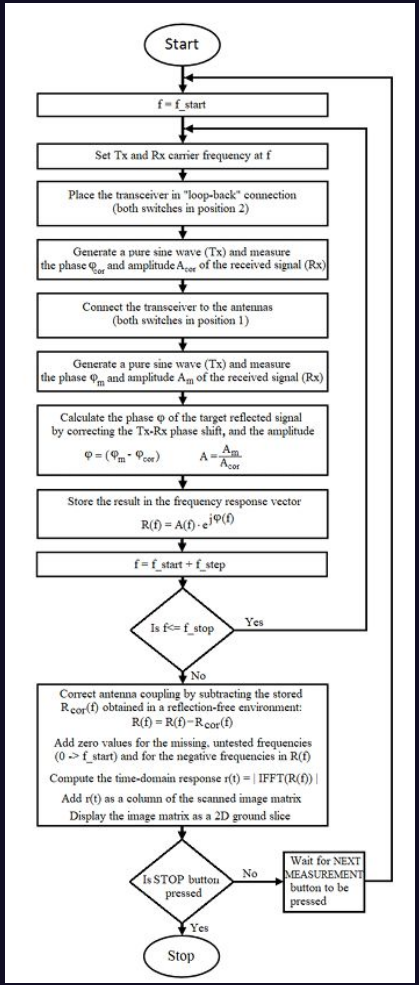
Start
f = f_start
Set Tx and Rx carrier frequency at f
Place the transceiver in "loop-back" connection (both switches in position 2)
Generate a pure sine wave (Tx) and measure the phase φ_{cor} and amplitude A_{cor} of the received signal (Rx)
Connect the transceiver to the antennas (both switches in position 1)
Generate a pure sine wave (Tx) and measure the phase φ_m and amplitude A_m of the received signal (Rx)
Calculate the phase φ of the target reflected signal by correcting the Tx-Rx phase shift, and the amplitude
$\varphi = (\varphi_m - \varphi_{cor})$ $A = \frac{A_m}{A_{cor}}$
Store the result in the frequency response vector
$R(f) = A(f) \cdot e^{j\varphi(f)}$
f = f_start + f_step
Is f<= f_stop
Yes
No
Correct antenna coupling by subtracting the stored $R_{cor}(f)$ obtained in a reflection-free environment:
$R(f) = R(f) - R_{cor}(f)$
Add zero values for the missing, untested frequencies (0 -> f_start) and for the negative frequencies in R(f)
Compute the time-domain response r(t) = | IFFT(R(f)) |
Add r(t) as a column of the scanned image matrix
Display the image matrix as a 2D ground slice
Is STOP button pressed
No
Wait for NEXT MEASUREMENT button to be pressed
Yes
Stop

ANTIPODAL VIVALDI ANTENNA

A tapered slot antenna (TSA) that operates over a wide frequency range. It consists of two conductor layers on opposite sides of a dielectric substrate, forming an exponentially flaring slot. Commonly used in radar, microwave imaging, and UWB (Ultra-Wideband) applications due to its high gain and broadband performance

1. **Working principle**
   - The input signal is fed through a microstrip line, which transitions into a slotline structure.
   - As the signal propagates, the exponentially tapered slot guides the waves outward.
   - The gradual widening of the slot ensures impedance matching, resulting in efficient radiation.

CONTD...

2. Designing and Simulating in HFSS

- Define the Substrate: Use FR4 ($\varepsilon r \approx 4.4$, thickness ~1.6 mm)
- Microstrip Feed: Place it on one side of the substrate and transition it to a slotline
- Exponential Slot Design: Define the slot flare using the exponential equation=Cexp(Ax)

where A and C are constants that determine the rate of flare.

- Ground Plane & Tapering: Ensure a smooth transition for impedance matching
- Excitation & Boundary Conditions: Use wave ports for feeding and assign radiation boundaries
- Run Simulation: Analyze S-parameters, radiation pattern, impedance matching.

CONTD...

3. Microstrip - Half-wavelength:
   - The microstrip length (L) should be approximately $\lambda/2$ (half the guided wavelength) to ensure efficient energy transfer
   - It allows a proper transition from microstrip to slotline, minimizing reflections and enhancing bandwidth
4. Microstrip for signal transfer:
   - Acts as a feeding mechanism, efficiently transferring the signal from the source to the radiating structure
5. Fabrication and Testing:
   - Copper Clad FR4 will be used to fabricate the AVA
   - Testing is to be done using a Vector Network Analyzer (VNA) to measure S_{11}

VOLTAGE AND CURRENT LEVELS

1. **SIGNAL GENERATOR (VCO):**
   - Model: MC100EL1648
   - Typical Operating Frequency Up to 1100 MHz
   - PECL (Positive Emitter-Coupled Logic) Mode Operating Range: VCC = 4.2 V to 5.5 V with VEE = 0 V
   - Low–Power 19 mA at 5.0 Vdc Power Supply
   - Requires an external parallel tank circuit consisting of the inductor (L) and capacitor (C).
   - A varactor diode is incorporated into the tank circuit to provide a voltage variable input for the oscillator (VCO)

2. TRANSMITTER AND RECEIVER SECTION:

- **LOW NOISE AMPLIFIER**
- Model: PSA4-5043+
- Frequency 50MHz to 4GHz
- Gain 18.4dB
- Voltage supply 3V,5V
- Current Supply 58mA
- Noise Figure 0.75dB(quantifies how much noise the amplifier adds to the signal compared to an ideal noiseless amplifier)

2. TRANSMITTER AND RECEIVER SECTION:

- **ANTENNA**
- Type: Antipodal Vivaldi Antenna
- Frequency
- Gain
- Radiation pattern

- **MIXER**
- Model: ADE-2ASK+
- Frequency 1Mhz to 1Ghz
- RF Power(max)= 50mW
- IF Current (max) = 40mA

2. TRANSMITTER AND RECEIVER SECTION:

- **POWER SPLITTER**
- Model: ADP-2-4
- Frequency 10 MHz ~ 1 GHz
- Insertion Loss= 0.8dB (amount of power lost when a signal passes through a component)
- Power Input (as a splitter) 1W max.
- Internal Dissipation 0.125W max.

3. LF CIRCUIT:

- **LOW NOISE OP AMP (IN BAND PASS FILTER)**
- Model: LMV772
- Typical Gain Bandwidth Product = 3.5MHz
- Typical Single Supply Voltage = 3 V, 5 V
- Typical Slew Rate =1.4V/μs (maximum rate of change of output voltage in response to a fast input signal)

- **NON INVERTING AMPLIFIER**
- Model: LT1077
- Slew Rate Typical =0.12V/μs
- Gain Bandwidth Product=230kHz
- Supply Voltage Range 0V to ± 18V, 5V to ± 18V

4. SIGNAL PROCESSING:

- **MICROCONTROLLER BOARD**
- Model: STM32F103
- Serial communication with DAC using I2C protocol
- Maximum processor frequency of 72 MHz
- It operates within a voltage range of 2.0 to 3.6V
- Has UART, SPI communication protocols as well
- Has in-built 12-bit ADC
- The microcontroller supports various low-power modes, including Sleep, Stop, and Standby modes, to optimize power consumption

4. SIGNAL PROCESSING:

- **DAC**
- Model: MCP4725
- 12 bit resolution
- 2.7V to 5.5V supply
- ±0.2 LSB DNL (typical) (DNL :difference between two digital codes)
- Fast Settling Time: 6 µs (typical) (allows high clock rates)
- Supply Current: 210uA (typical)

4. SIGNAL PROCESSING:

- **LCD, SD CARD OR WIRELESS TRANSMISSION**
- VCC Power Voltage: 3.3V ~ 5V
- Logic IO Port Voltage: 3.3V (TTL)
- 480×320 resolution, ensuring sharp and detailed images and text.
- Optional resistive touch functionality for interactive applications.
- Operates using SPI serial communication protocol
- 3.5-inch screen supporting 65K colors
- MicroSD card slot for external storage

IMPORTANT SPECIFICATIONS

In our project, the implementation of the above mentioned parameters are as follows

- Mechanism - Stepped-frequency radar
- Bandwidth - 600 MHz
- Resolution - 12 cm

ANALYSIS, SIMULATIONS AND KEY INSIGHTS

05

1. MATLAB SIMULATIONS

- We tried to model a Step-Frequency Continuous Wave (SFCW) Ground Penetrating Radar System operating from 400 MHz to 1 GHz, designed to detect multiple targets buried in soil with a relative permittivity of 9
- The simulation generates radar returns from three targets at different depths (0.5m, 1.2m, 2.1m), incorporating realistic effects like soil attenuation, propagation losses, and system noise
- Signal processing techniques including IFFT and Hamming windowing are applied to convert the frequency domain data to time domain for target detection
- The code demonstrates both A-scan (single position depth profile) and B-scan (multiple positions) capabilities, with the B-scan revealing characteristic hyperbolic patterns of buried targets, followed by a simple migration technique to focus these patterns back to their true positions.

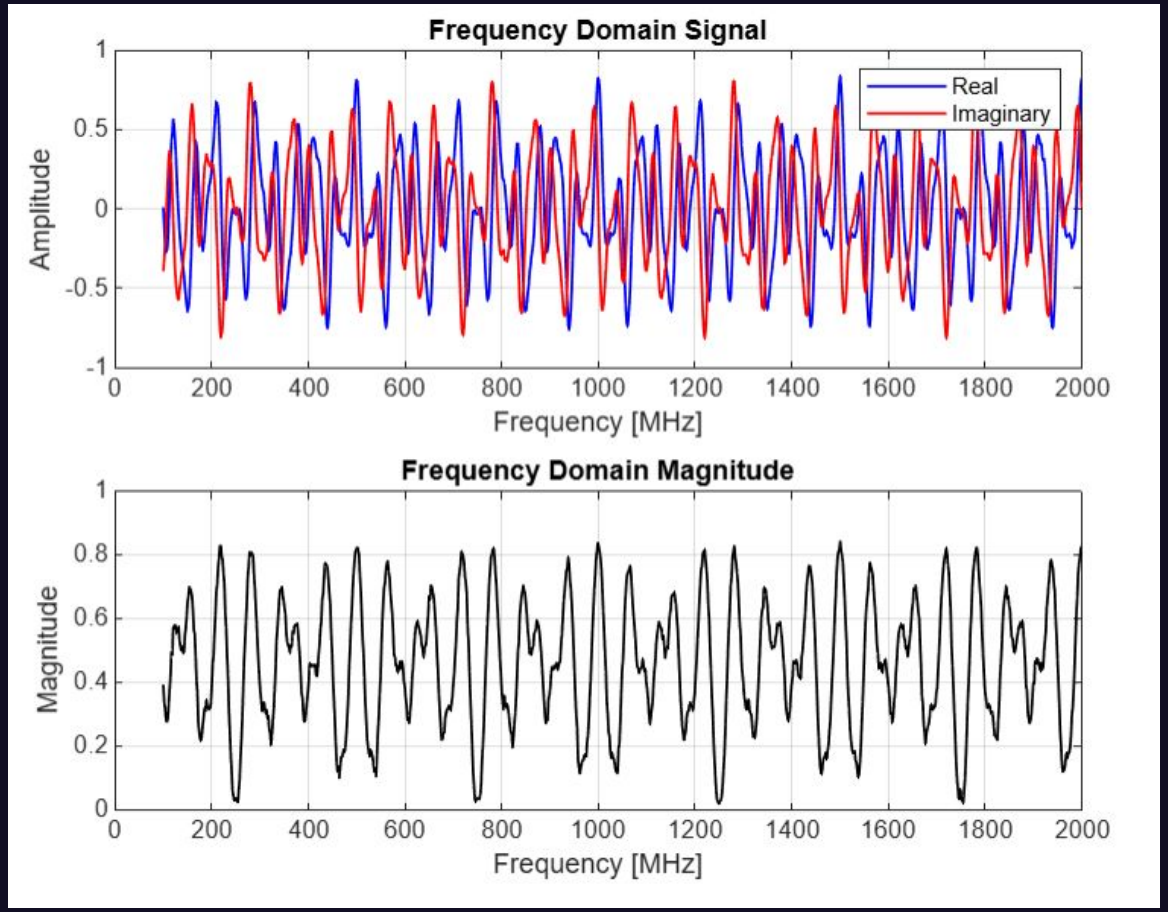
Frequency Domain Signal
Real
Imaginary
Amplitude
1
0.5
0
-0.5
-1
0
200
400
600
800
1000
1200
1400
1600
1800
2000
Frequency [MHz]
Frequency Domain Magnitude
Magnitude
1
0.8
0.6
0.4
0.2
0
0
200
400
600
800
1000
1200
1400
1600
1800
2000
Frequency [MHz]

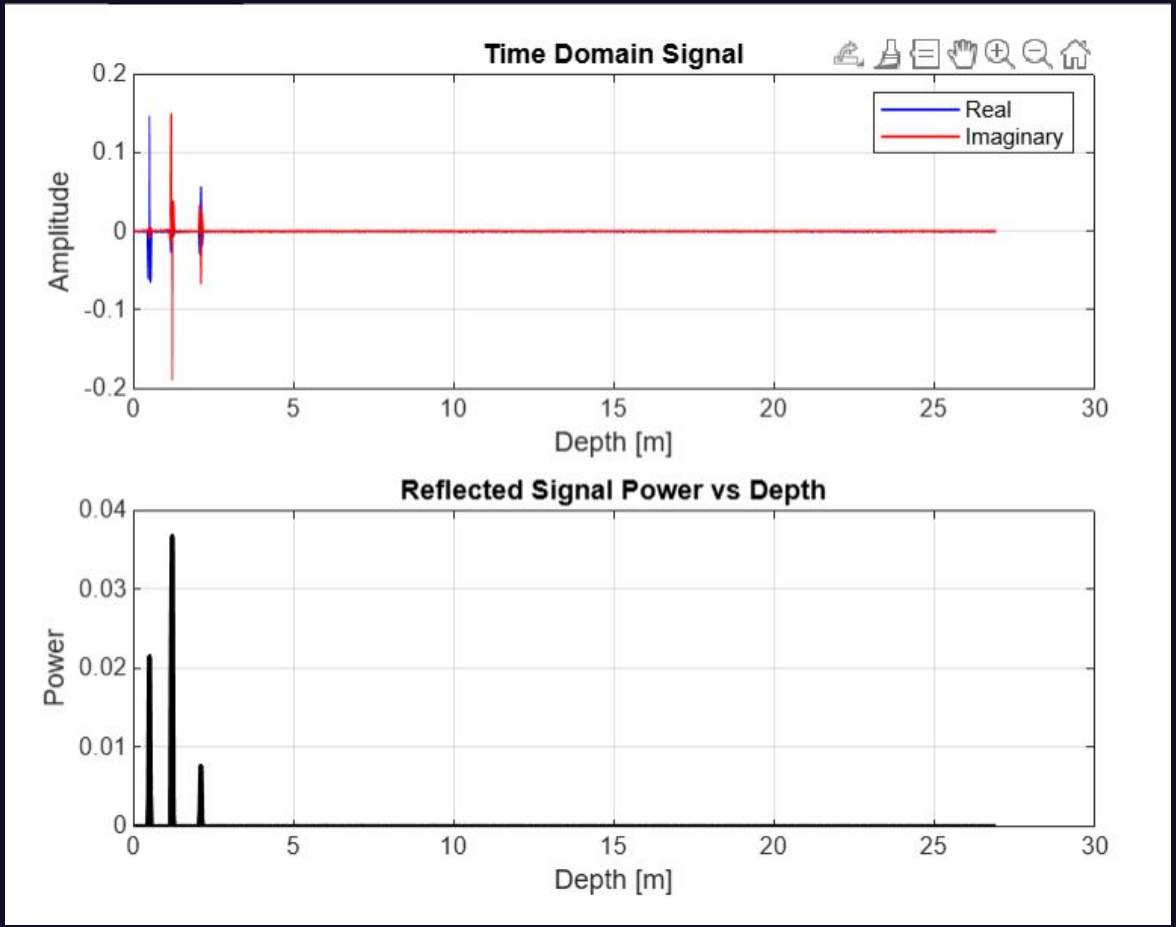
Time Domain Signal
Real
Imaginary
Amplitude
0.2
0.1
0
-0.1
-0.2
0
5
10
15
20
25
30
Depth [m]
Reflected Signal Power vs Depth
Power
0.04
0.03
0.02
0.01
0
0
5
10
15
20
25
30
Depth [m]

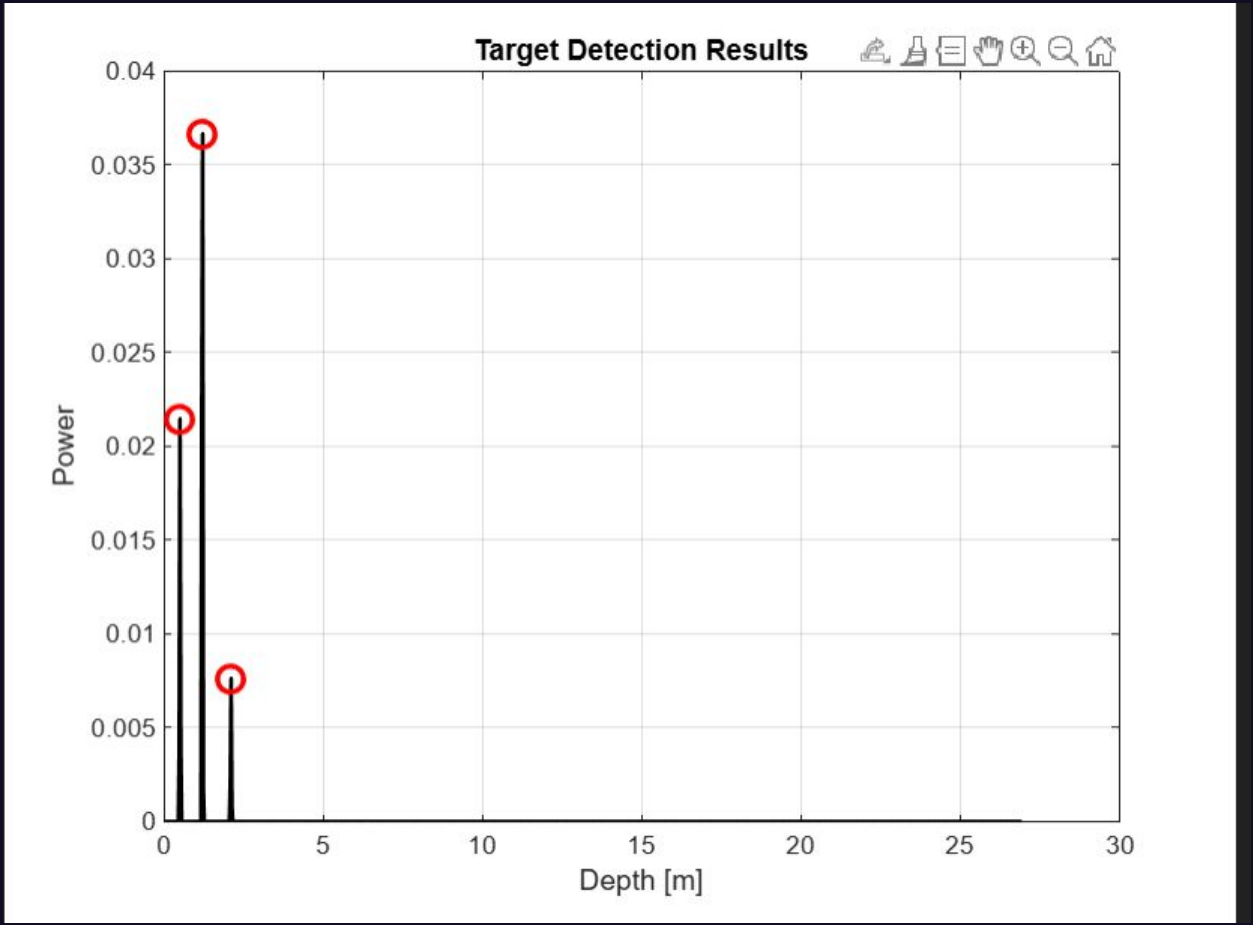
Target Detection Results
Power
Depth [m]
0.04
0.035
0.03
0.025
0.02
0.015
0.01
0.005
0
0
5
10
15
20
25
30

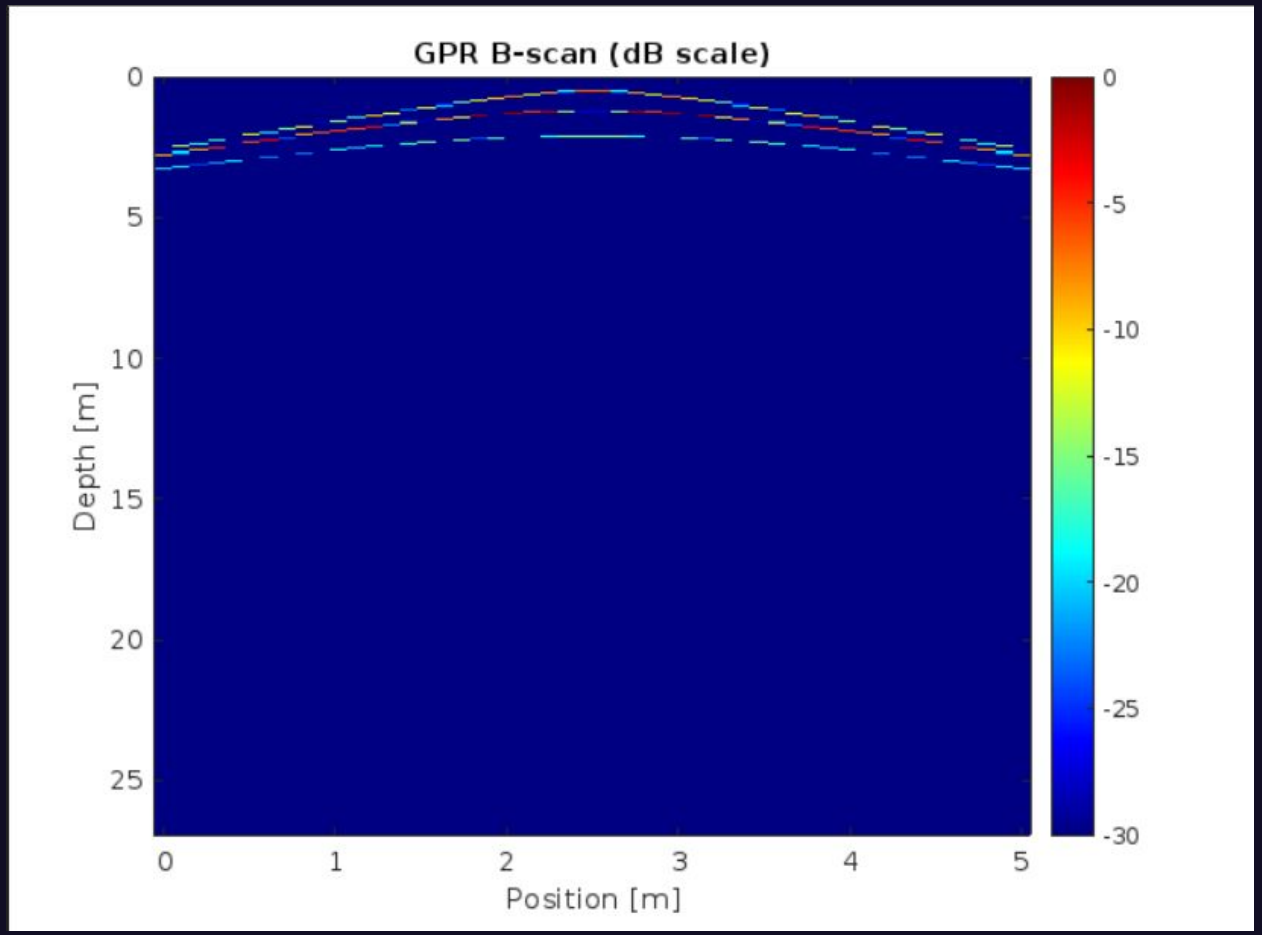
GPR B-scan (dB scale)
Depth [m]
0
5
10
15
20
25
Position [m]
0
1
2
3
4
5
0
-5
-10
-15
-20
-25
-30

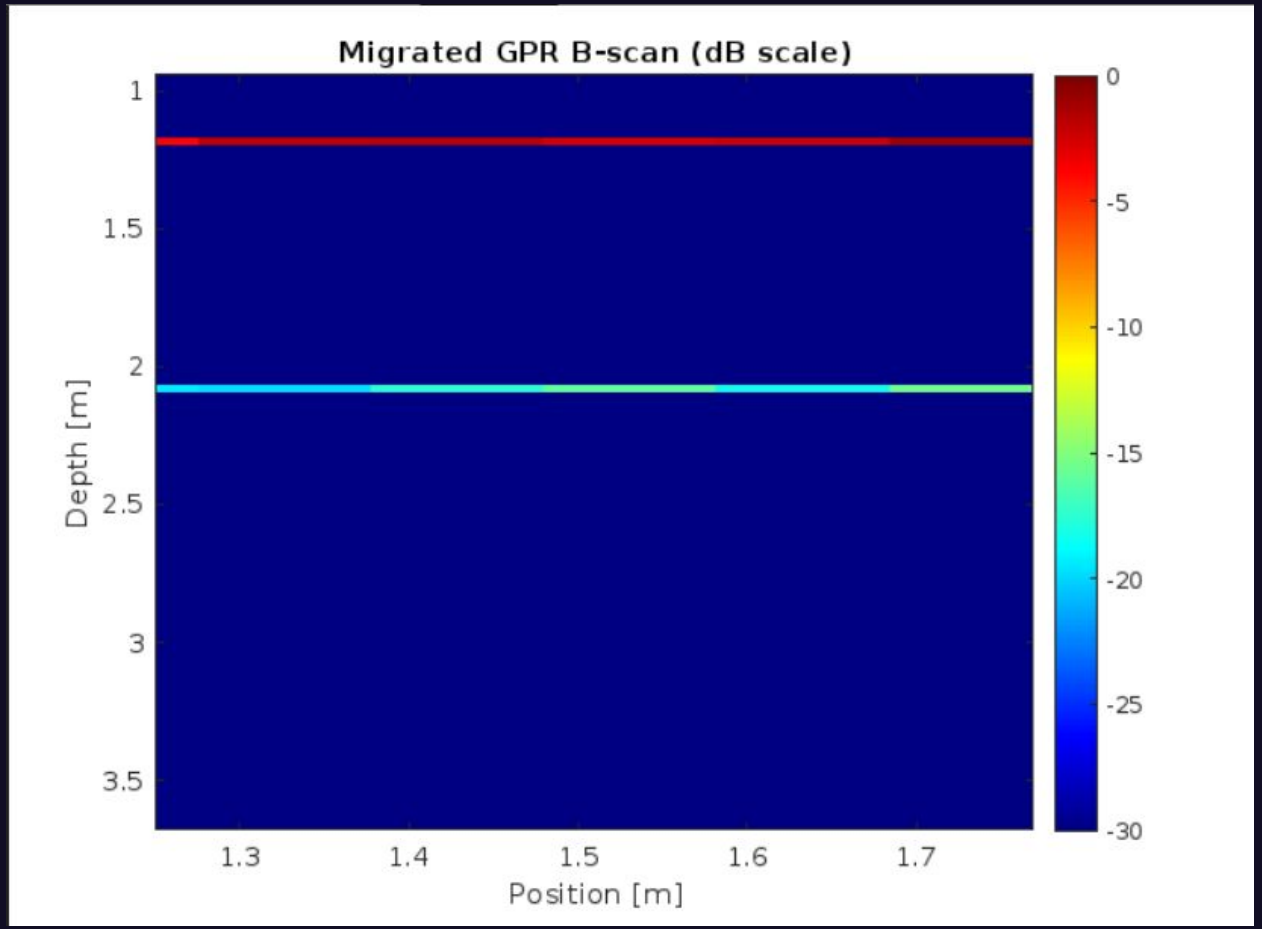
Migrated GPR B-scan (dB scale)
Depth [m]
1
1.5
2
2.5
3
3.5
Position [m]
1.3
1.4
1.5
1.6
1.7
0
-5
-10
-15
-20
-25
-30

```
Actual target depths (m):
    0.5000    1.2000    2.1000

Detected target depths (m):
    0.5000    1.1667    2.0833
```

2. GNU RADIO SIMULATIONS

- For testing, we used GNU Radio to build the RF board blocks, which included a signal source, a VCO, and an array for step frequency generation
- The output was fed into a USRP connected to a monopole antenna, functioning as the transmitter
- On the receiving end, a second USRP was connected to another laptop, acting as the receiver. The received signal was processed in GNU Radio, where it was mixed with the transmitted signal. The output of the mixer was passed through a low-pass filter, and the filtered signal was sent to an FFT sink for analysis.
- To observe changes, we compared the FFT output in two scenarios:
    - When an object was placed between the two antennas.
    - When no object was present.
- This allowed us to analyze how the presence of the object affected the phase change.

TRANSMITTER SIDE

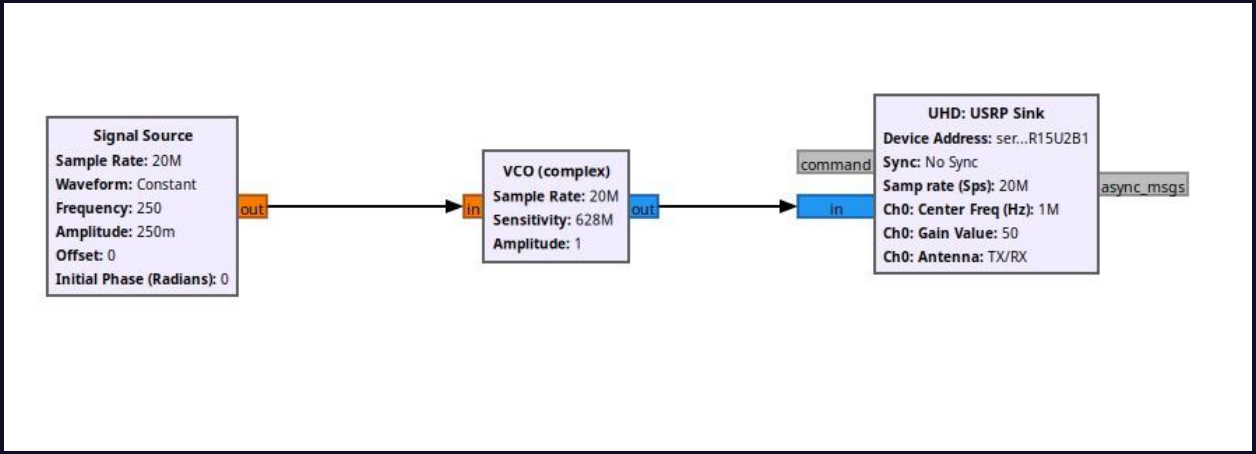

TRANSMITTER SIDE

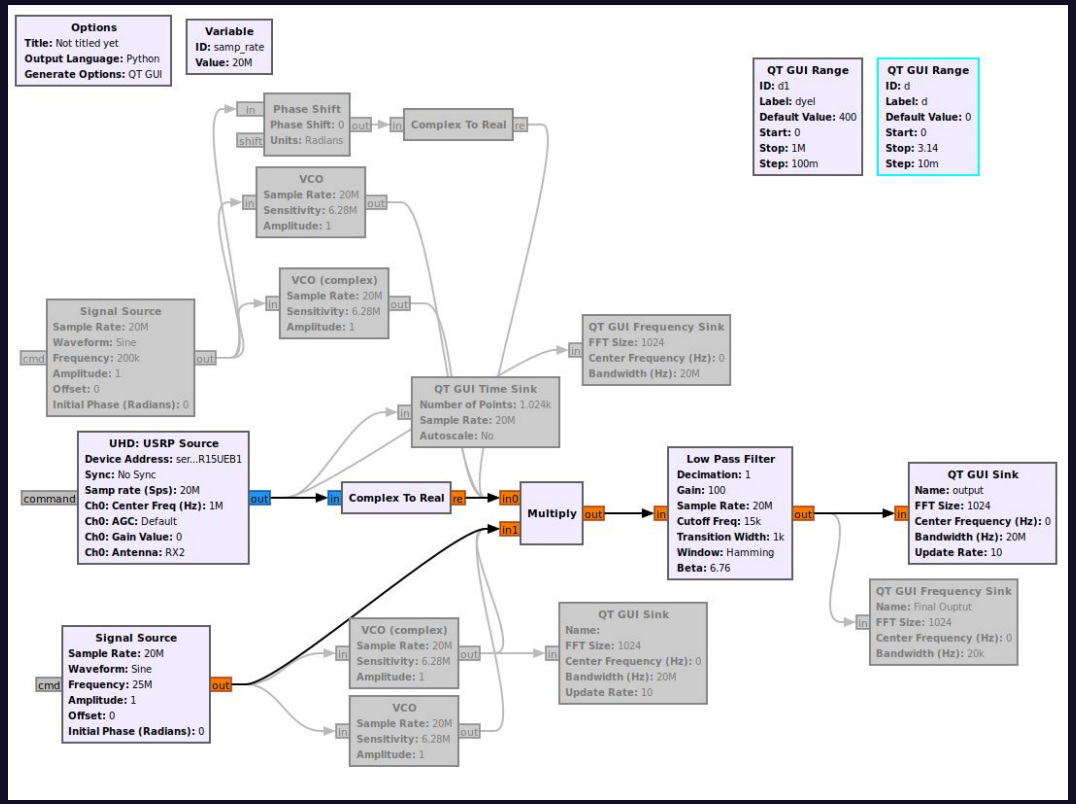

FREQUENCY SINK PLOT

Here, f=0 (DC response) is proportional to the phase difference

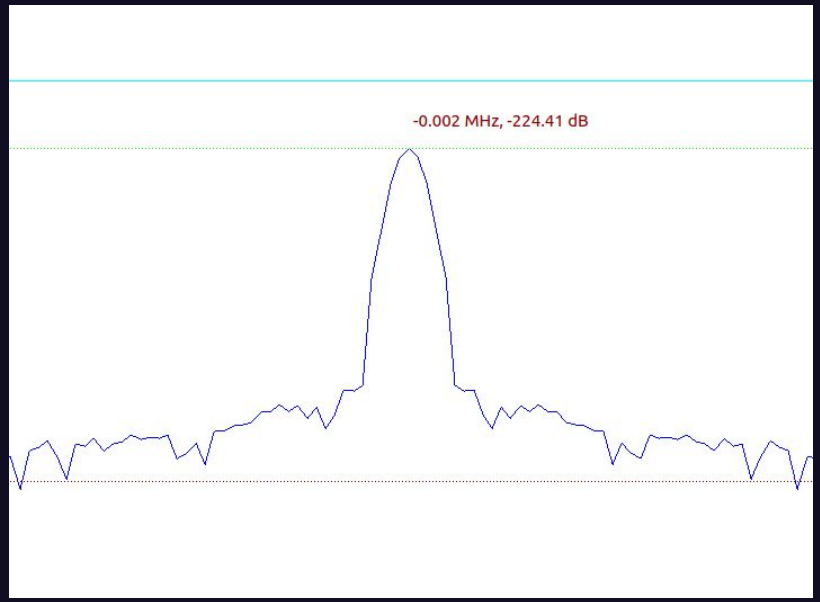

3. LF BOARD SIMULATIONS

- We tested the output variation of a non-inverting amplifier in response to a voltage sweep from the DAC
- This helps us analyze the input voltage range suitable for the VCO

Voltage (in V)	Output (in Volt)
1	3.6814
1.5	5.535
2	7.381
2.5	9.237
3	11.091
3.5	12.497
4	14.8
4.5	16.63
5	18.49

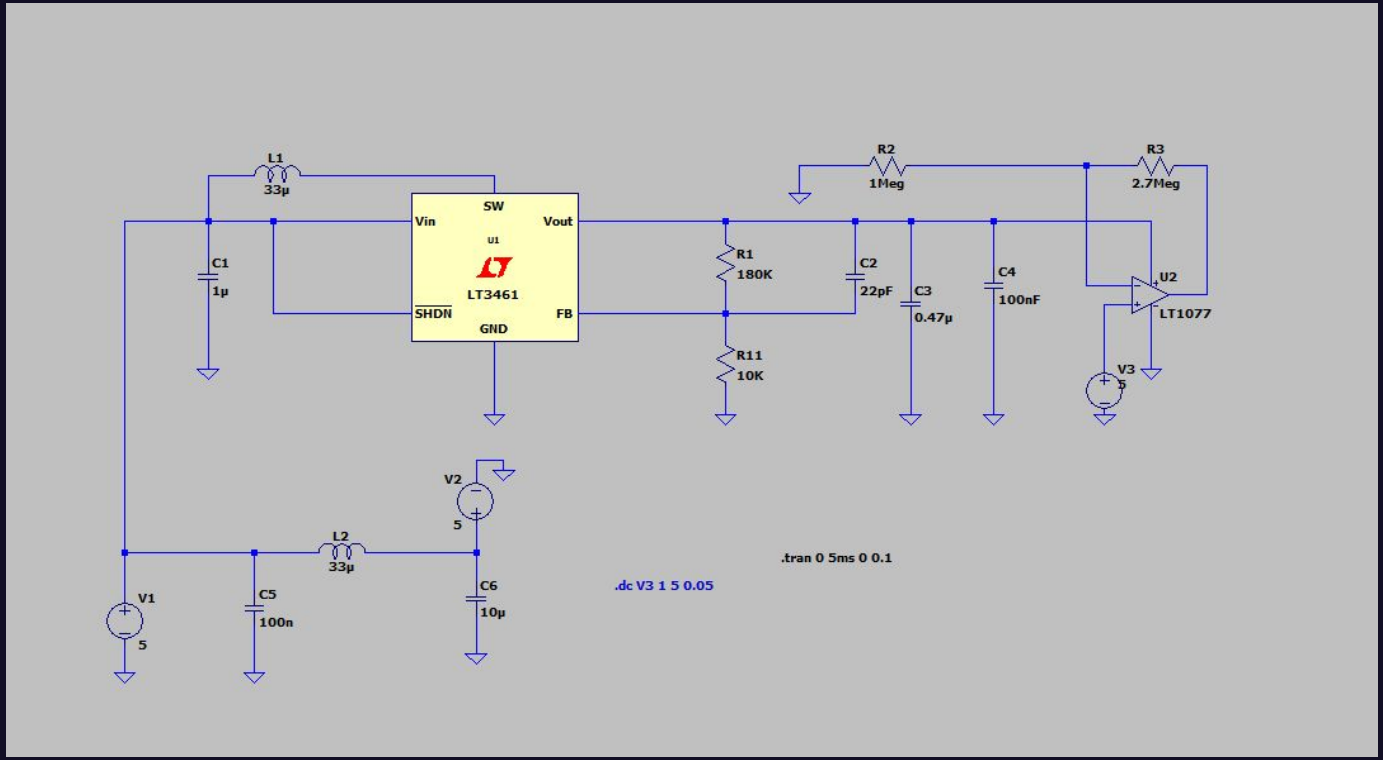
L1
33µ
C1
1µ
SW
Vin
Vout
U1
LT3461
SHDN
FB
GND
R1
180K
R11
10K
R2
1Meg
R3
2.7Meg
C2
22pF
C3
0.47µ
C4
100nF
U2
LT1077
V3
5
V2
5
L2
33µ
V1
5
C5
100n
C6
10µ
.tran 0 5ms 0 0.1
.dc V3 1 5 0.05

Simulated the bandpass filter, analysed how with the changes in the resistances change the bandwidth of the bandpass filter

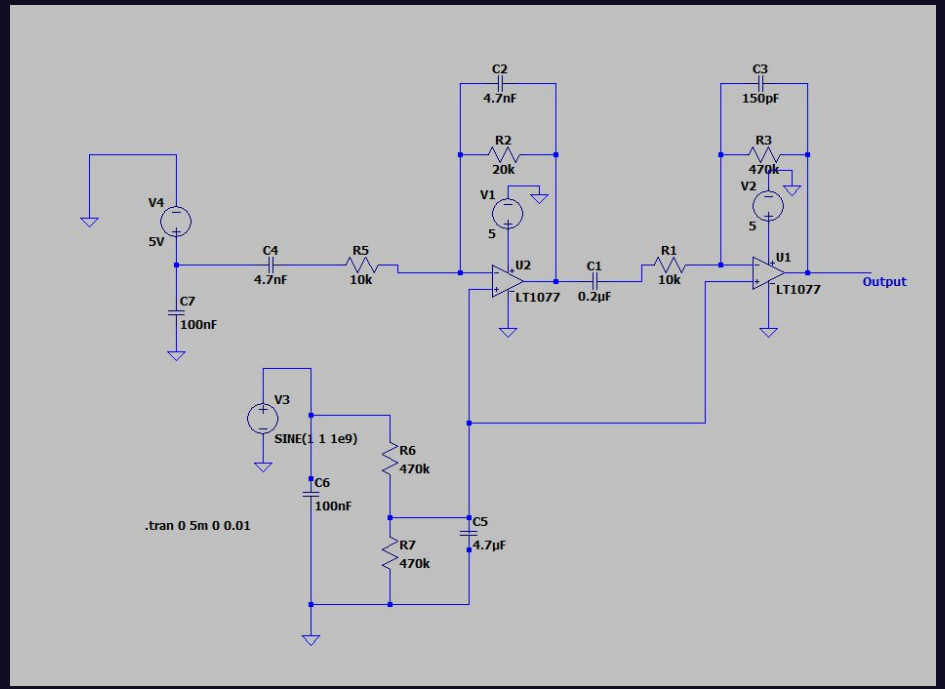

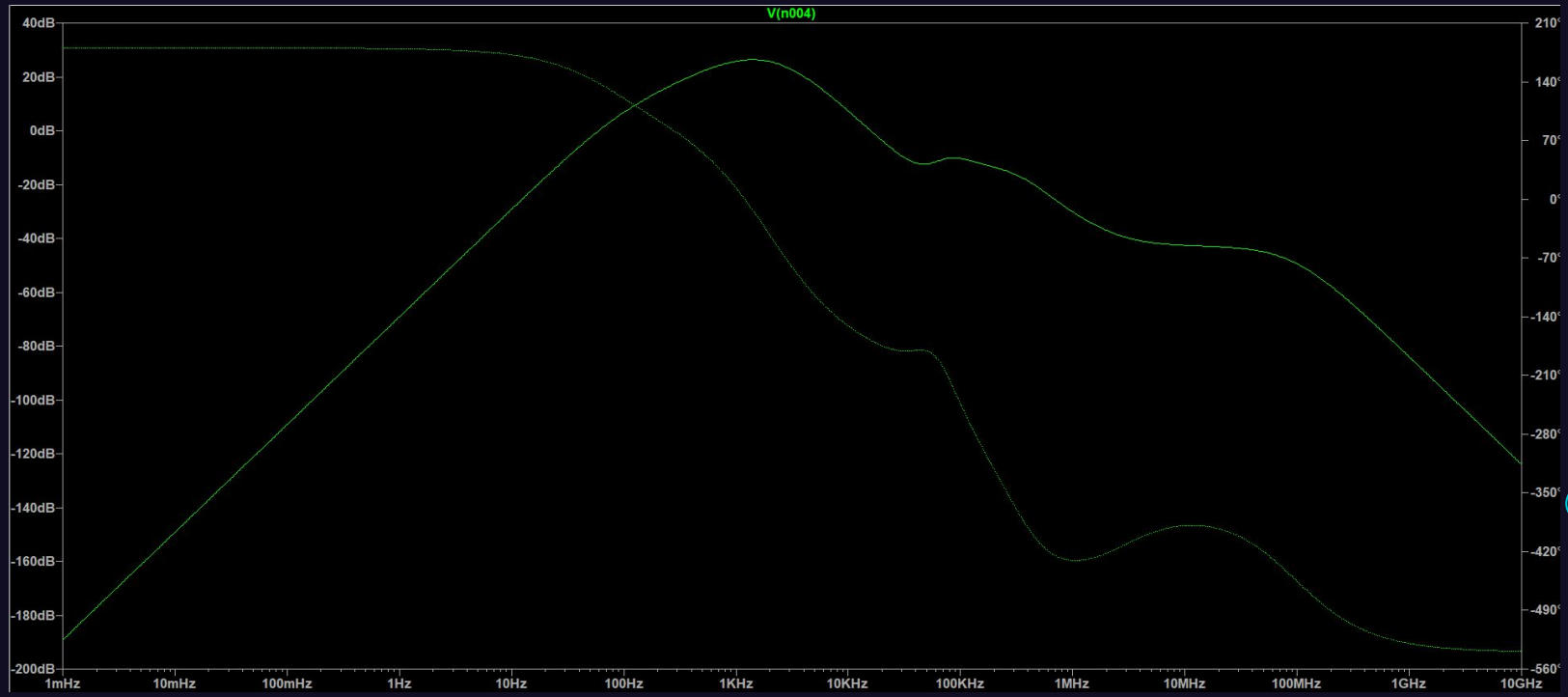
V(n004)
40dB
20dB
0dB
-20dB
-40dB
-60dB
-80dB
-100dB
-120dB
-140dB
-160dB
-180dB
-200dB
210°
140°
70°
0°
-70°
-140°
-210°
-280°
-350°
-420°
-490°
-560°
1mHz
10mHz
100mHz
1Hz
10Hz
100Hz
1KHz
10KHz
100KHz
1MHz
10MHz
100MHz
1GHz
10GHz

4. ANTENNA SIMULATIONS - PROGRESS SO FAR

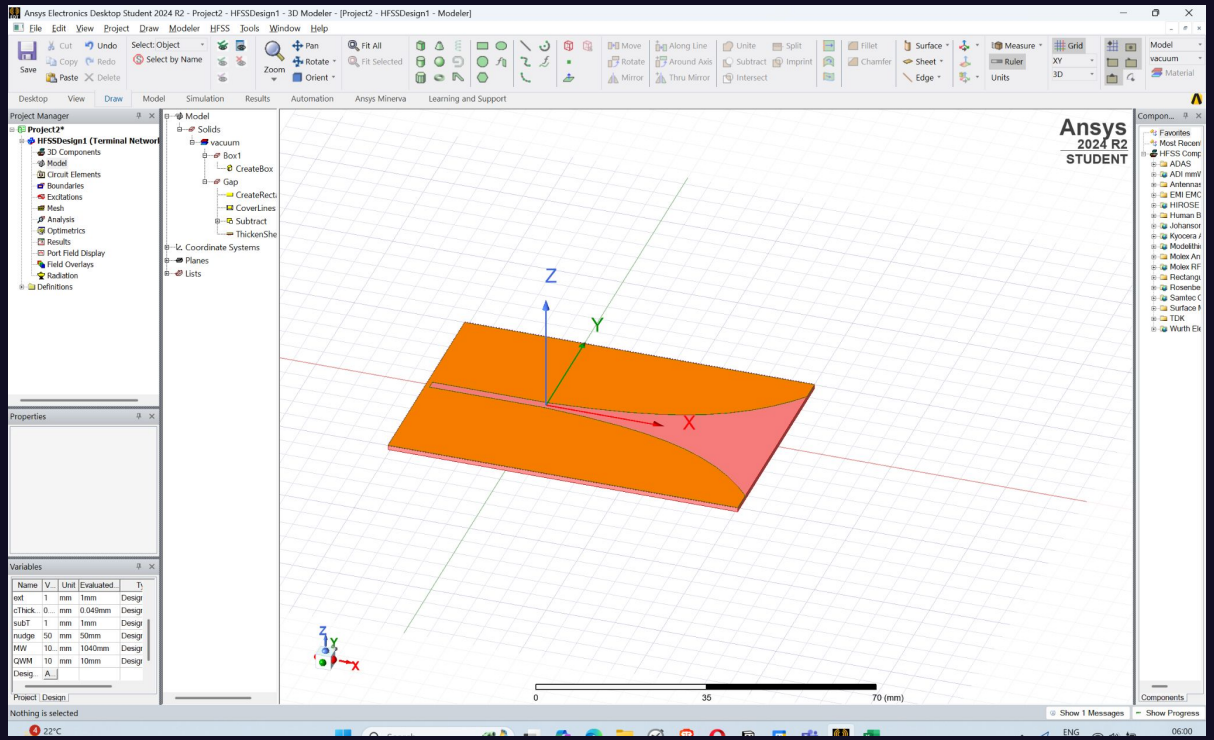

4. ANTENNA SIMULATIONS - EXPECTED

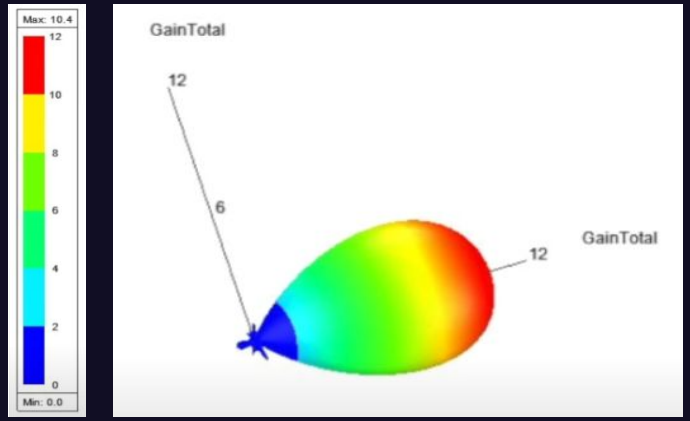

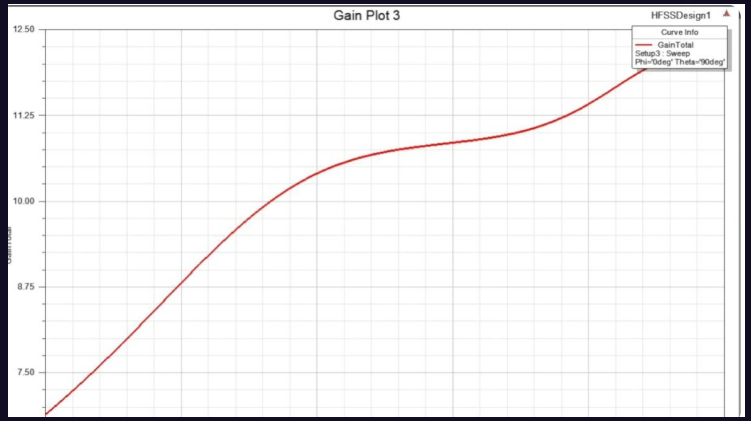

CIRCUIT DIAGRAMS

06

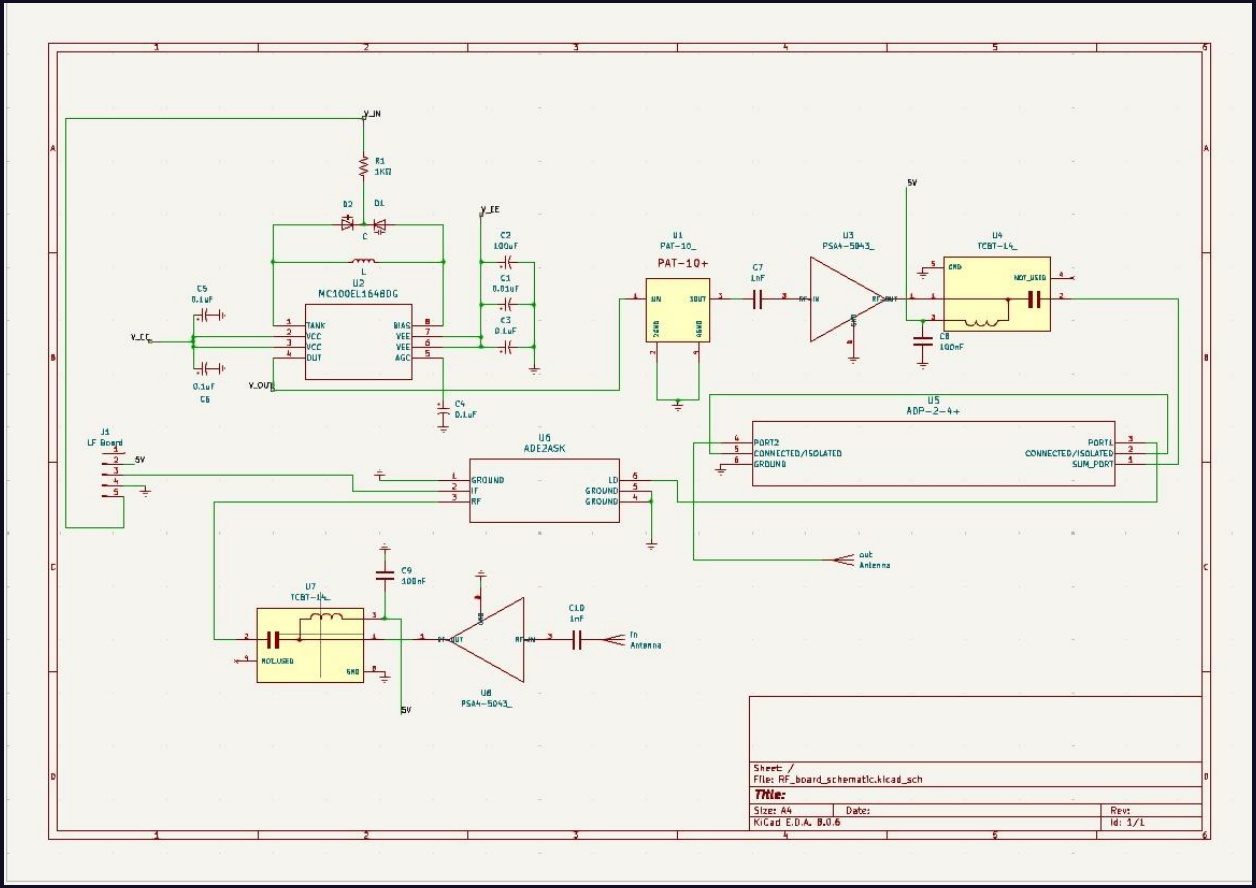
V_IN
R1
1KΩ
D2
D1
V_EE
C2
100uF
C1
0.01uF
C3
0.1uF
L
U2
MC100EL1648DG
C5
0.1uF
V_CC
0.1uF
C6
TANK
VCC
VCC
OUT
BIAS
VEE
VEE
AGC
V_OUT
C4
0.1uF
U1
PAT-10_
PAT-10+
C7
1nF
U3
PSA4-5043_
5V
U4
TCBT-14_
GND
NOT_USED
C8
100nF
U5
ADP-2-4+
PORT2
CONNECTED/ISOLATED
GROUND
PORT1
CONNECTED/ISOLATED
SUM_PORT
J1
LF Board
5V
U6
ADE2ASK
GROUND
IF
RF
LO
GROUND
GROUND
out
Antenna
C9
100nF
U7
TCBT-14_
NOT_USED
GND
U8
PSA4-5043_
5V
C10
1nF
In
Antenna
Sheet: /
File: RF_board_schematic.kicad_sch
Title:
Size: A4
Date:
Rev:
KiCad E.D.A. 8.0.6
Id: 1/1

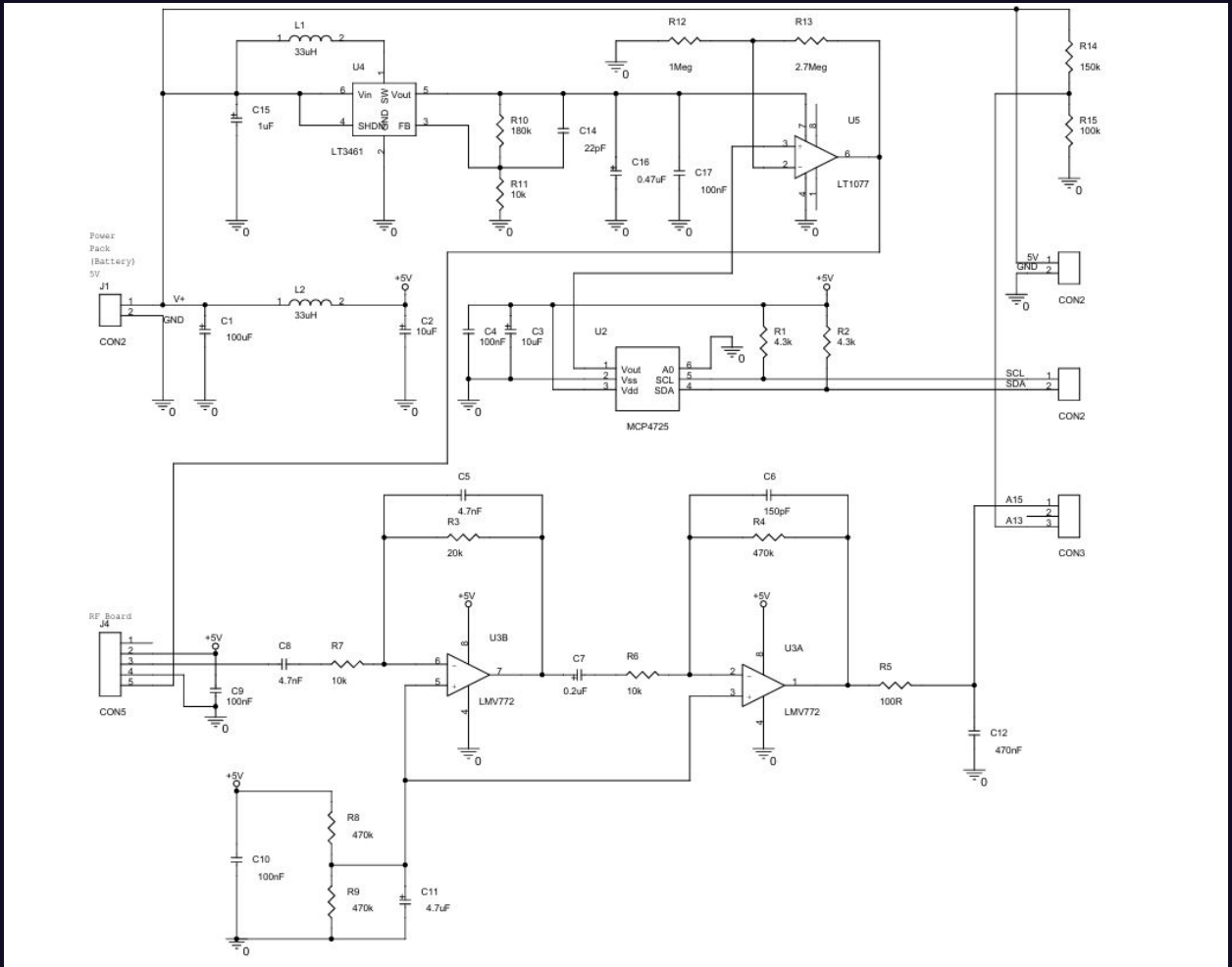
L1
33uH
U4
Vin
Vout
SHDN
SW
GND
FB
LT3461
C15
1uF
R10
180k
R11
10k
C14
22pF
C16
0.47uF
C17
100nF
R12
1Meg
R13
2.7Meg
U5
LT1077
R14
150k
R15
100k
Power
Pack
(Battery)
5V
J1
CON2
V+
GND
C1
100uF
L2
33uH
+5V
C2
10uF
C4
100nF
C3
10uF
U2
Vout
Vss
Vdd
A0
SCL
SDA
MCP4725
R1
4.3k
R2
4.3k
5V
GND
CON2
SCL
SDA
CON2
C5
4.7nF
R3
20k
C6
150pF
R4
470k
A15
A13
CON3
RF Board
J4
CON5
C8
4.7nF
R7
10k
C9
100nF
U3B
LMV772
C7
0.2uF
R6
10k
U3A
LMV772
R5
100R
C12
470nF
R8
470k
C10
100nF
R9
470k
C11
4.7uF

TESTING STRATEGY 07

1. To test individual components on the common PCB, we plan to attach separate SMA/compatible connector pins on the PCB for each individual component
2. Working of DAC+ VCO system generating the RF signal to be tested by RF-compatible DSO
3. Working of Mixer and LPF will be analyzed using RF Signal Generator and DSO compatible with RF
4. (Optional) Analysis of antenna spectrum can be done in WEL cabin
5. Since specialized Op Amps are required with higher BW, breadboard testing of entire LF board to be done on breadboard post procurement

PRELIMINARY TESTING AND OBSERVATION

08

RESULTS

- Software simulation of principle had many challenges due to the limitation of software and USRP sampling rates, though we got some inference about the effect of phase difference from the FFT sink plot, that the 0 frequency (DC response) magnitude varies due phase difference.
- Based on the LF part simulation, all the simulation were as expected, simulation was done to understand how we use and tweak the value of the resistor to change the bandwidth value.

HYPOTHESES

- **Antenna coupling** : There will be antenna coupling as the receiver antenna will take signals from the transmitter too along with the reflected signal, for that we need to do calibration to subtract the antenna coupling by first measuring the antenna coupling when there is no subsurface object and we'll subtract this measured value while scanning subsurface objects
- **Extraction of phase**: There were ambiguous readings in software testing due to time synchronization issues and sampling rate overflows

PLANS FOR THE NEXT MILESTONE

09

ENGINEERING DESIGN CONSIDERATIONS

- PCB Layout and Fabrication Considerations:
- Controlled impedance traces for RF signals.
- Separation of RF, power, and digital signals to reduce interference.(separate LF and RF boards)
- Proper grounding to ensure signal integrity and reduce noise
- use a continuous ground plane under signal and power layers.
- Avoid cuts, gaps, or breaks, which can create unwanted loops and increase impedance.
- Isolation of high-power components from sensitive analog/RF sections.

ENGINEERING DESIGN CONSIDERATIONS

- Minimise the area enclosed by loops to reduce electromagnetic interference(noise from the signal itself, not external)
- Transmission lines (traces) must match the characteristic impedance of the source and load. A mismatch causes signal reflections, which reduce efficiency and distort radar pulses.

VENDOR IDENTIFICATION AND PLAN

- Discussion with the EDL mentors needs to be done
- Following a successful antenna simulation, according to the dimensions antenna fabrication needs to be done
- In case of the PCB fabrication, if the requirement is to print it from outside, Lion Circuits is the vendor we're planning to go for

SOFTWARE DEVELOPMENT

- Generating output signals to the DAC via I2C communication.
- Receiving analog signals, converting them to digital using the ADC.
- Implemented on an STM32 board using C programming & STM32CubeIDE.

IMPORTANT REFERENCES

10

1. Evaluation of a Ground Penetrating Radar to Map the Root Architecture of HLB-Infected Citrus Trees.

   Available from: https://www.researchgate.net/publication/334216177_Evaluation_of_a_Ground_Penetrating_Radar_to_Map_the_Root_Architecture_of_HLB-Infected_Citrus_Trees [accessed Feb 19 2025].

2. A Survey of Performance Enhancement Techniques of Antipodal Vivaldi Antenna.

   Available from: https://drive.google.com/file/d/1opwCi378jeQp_geoXv2C-0an8pD2xbBU/view?usp=sharing

THANK YOU