EDL
2025

SKORK
The Compact Ground Penetrating Radar System

Being Built by,
MON-12, EDL-13 team
Milestone - 3

TABLE OF CONTENTS

01 FEEDBACK AND ACTION

02 PROOF OF CONCEPT

03 PCB and CAD READINESS

04 PENDING TASKS

05 GANTT CHART DEVIATIONS

06 WORK DISTRIBUTION

07 PLAN FOR FINAL DEMO

FEEDBACK AND ACTION

01

Feedback received and Actions taken-

- Principle of Operation: B-scan Generation; Gained Understanding
- Parts A and B: meticulous team division
- Signal Processing Algorithm - focusing post Milestone 3

PROOF OF CONCEPT

02

VIDEO LINK:

[Proof of Concept using IVS-362 module]

- The video shows a clear change in waveform with varied distance of object

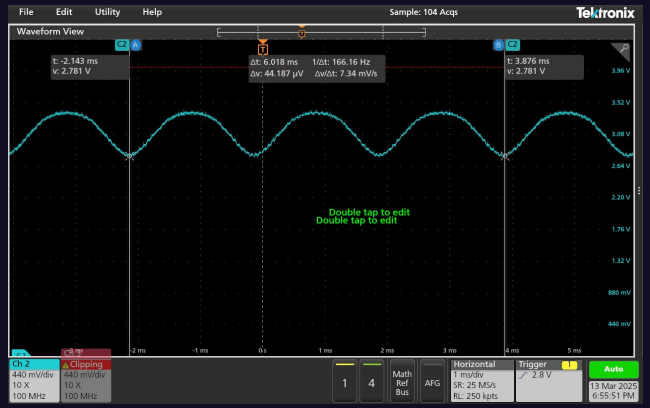

No reflecting object

Object at 10cm

Object at 20cm

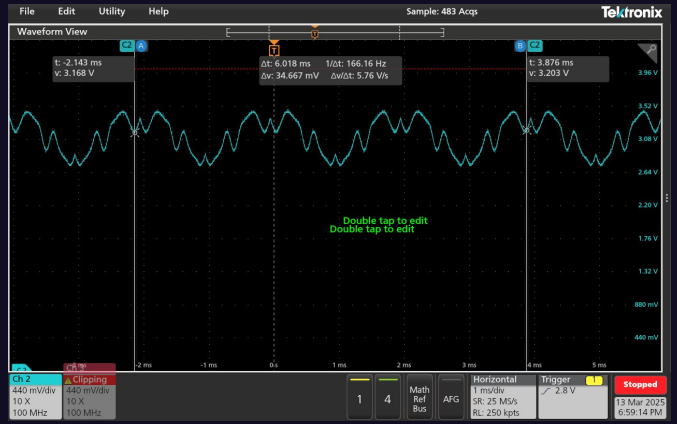

Object at 30cm

- Similarly, data samples were collected for a concrete brick with metals bars inside

- Corresponding Frequency spectrum for different x-points:

IF1 fourier transform plot for:

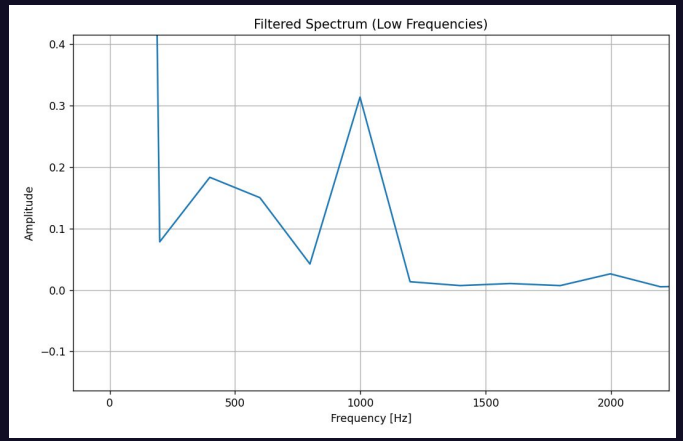

x=0 cm

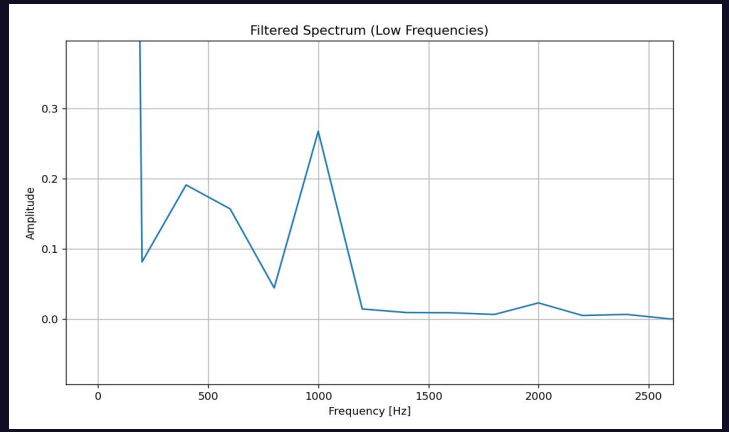

x= 3cm

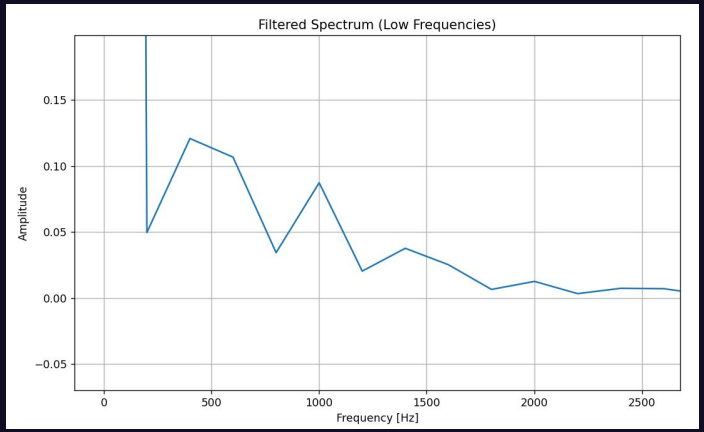
Filtered Spectrum (Low Frequencies)
Amplitude
Frequency [Hz]
0.15
0.10
0.05
0.00
−0.05
0
500
1000
1500
2000
2500

x= 4cm

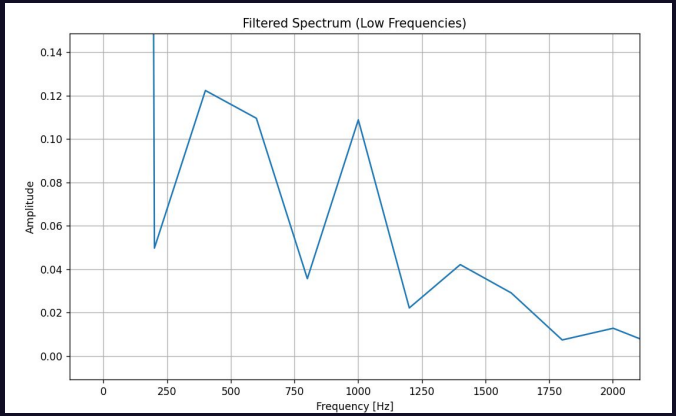
Filtered Spectrum (Low Frequencies)
Amplitude
Frequency [Hz]
0.14
0.12
0.10
0.08
0.06
0.04
0.02
0.00
0
250
500
750
1000
1250
1500
1750
2000

x=5cm

- Compiling these A-scans together, generated the following B-scan:

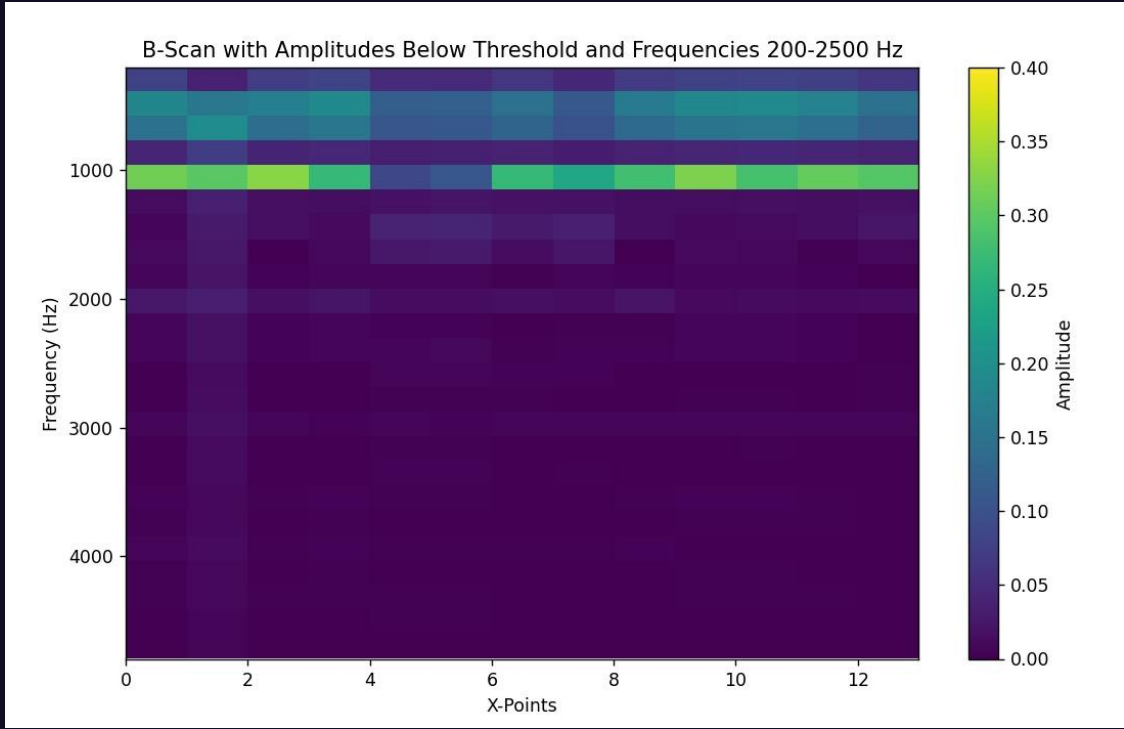

From the dimensions of the brick and positions of the bars:

- Spacing between bars: ~80mm, and from one of the faces, the concrete thickness is 3.5cm
- Lateral dimensions :15cm x 15cm

The B-scan follows this pattern with some proportionality constants involved. The principle of operation for detection of stationary object using FMCW GPR indeed suggests that beat frequency is directly proportional to the distance of object

The following relation exists:

Equation (1) $$R = \frac{c_0}{2} \cdot T \cdot \frac{f_D}{\Delta f}$$

It means:

f_D	differential frequency
Δf	frequency variation of transmitter oscillator
T	sawtooth repetition time
R	distance of a reflecting object
c_0	speed of light

Source: InnoSenT Application Note 2

PCB AND CAD READINESS

03

LF BOARD

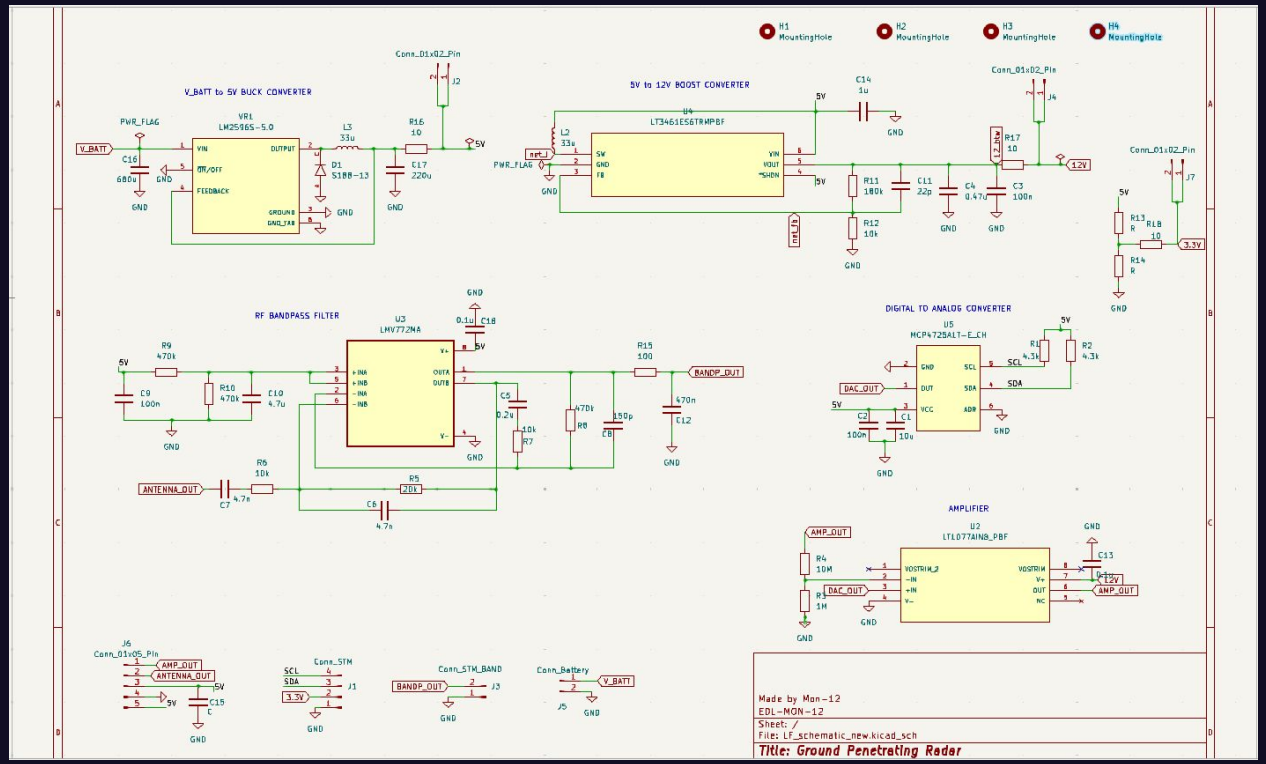
V_BATT to 5V BUCK CONVERTER
5V to 12V BOOST CONVERTER
RF BANDPASS FILTER
DIGITAL TO ANALOG CONVERTER
AMPLIFIER
Made by Mon-12
EDL-MON-12
Sheet: /
File: LF_schematic_new.kicad_sch
Title: Ground Penetrating Radar

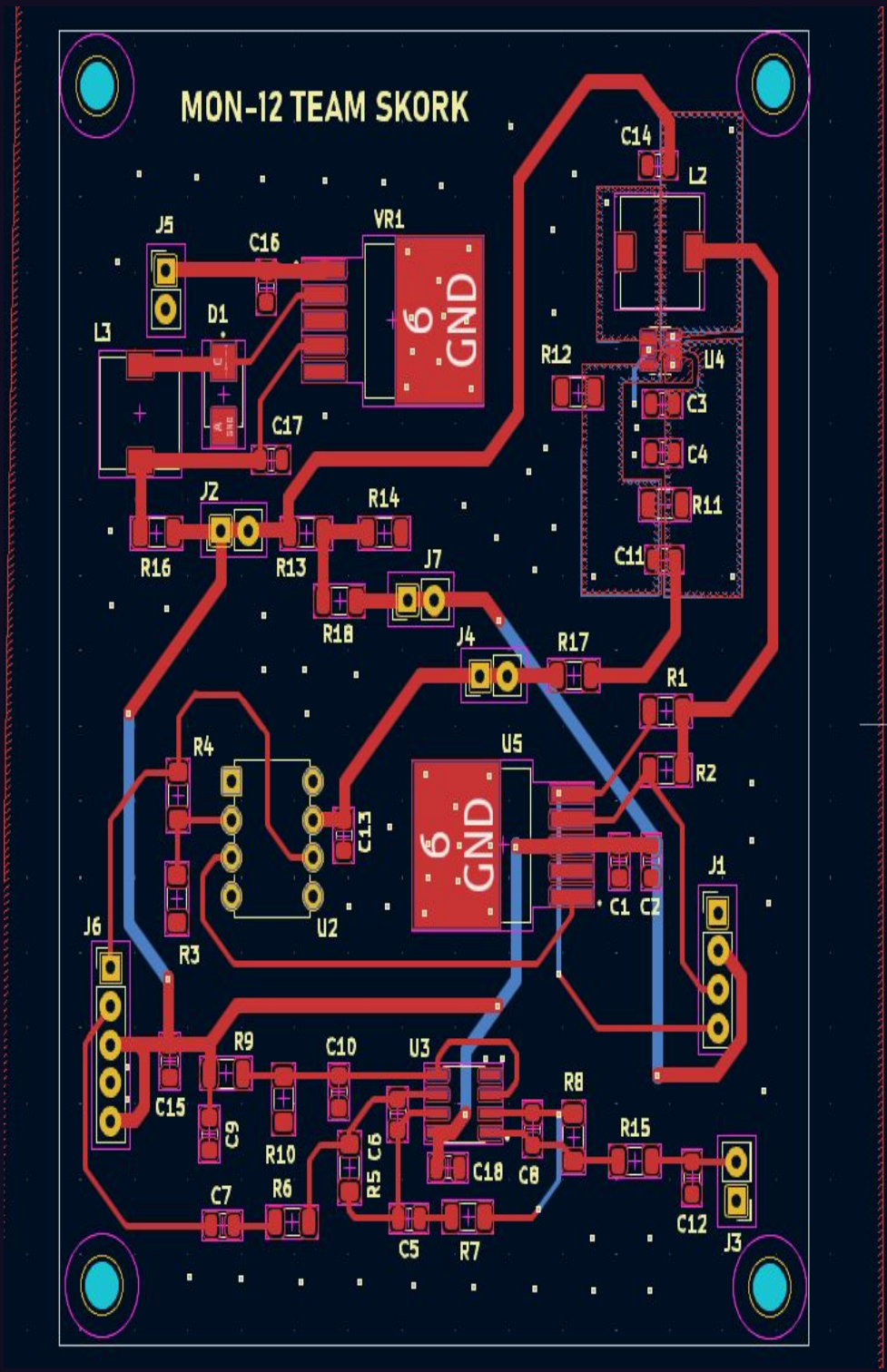
MON-12 TEAM SKORK
J5
C16
VR1
GND
D1
L3
C17
C14
L2
R12
U4
C3
C4
R11
C11
J2
R14
R16
R13
J7
R18
J4
R17
R1
R2
R4
U5
C13
GND
C1
C2
J1
U2
R3
J6
R9
C10
U3
R8
C15
C9
R10
R5
C6
C18
C8
R15
C7
R6
C5
R7
C12
J3

Key learnings :

- Place decoupling capacitors close to inputs/outputs and minimize loop areas.
- Follow datasheet layout recommendations, using polygon zones for low-current paths.
- Create alternative paths for external power supplies (5V, 12V, 3.3V) using extra pins.
- Use obtuse angles for tracks.
- Nets/labels over wire connections in schematics made pcb tracing easier.
- Knowledge of packages and select appropriate footprints for components is crucial.

Justification of Choices :

- Used SMD resistors,capacitors to reduce parasitic capacitance and inductances
- Switching convertors(efficiency ~80%) over linear regulators(efficiency ~50%)
- Diode 1N5824(as suggested in datasheet) for buck convertor:LM2596-5(7.4 to 5V) is only available in THT package. Its size is relatively bigger than other components involved in convertor which prevented in forming small loops.So,a diode 1N5822 with similar characteristics and in DO-214 package was chosen.

RF BOARD

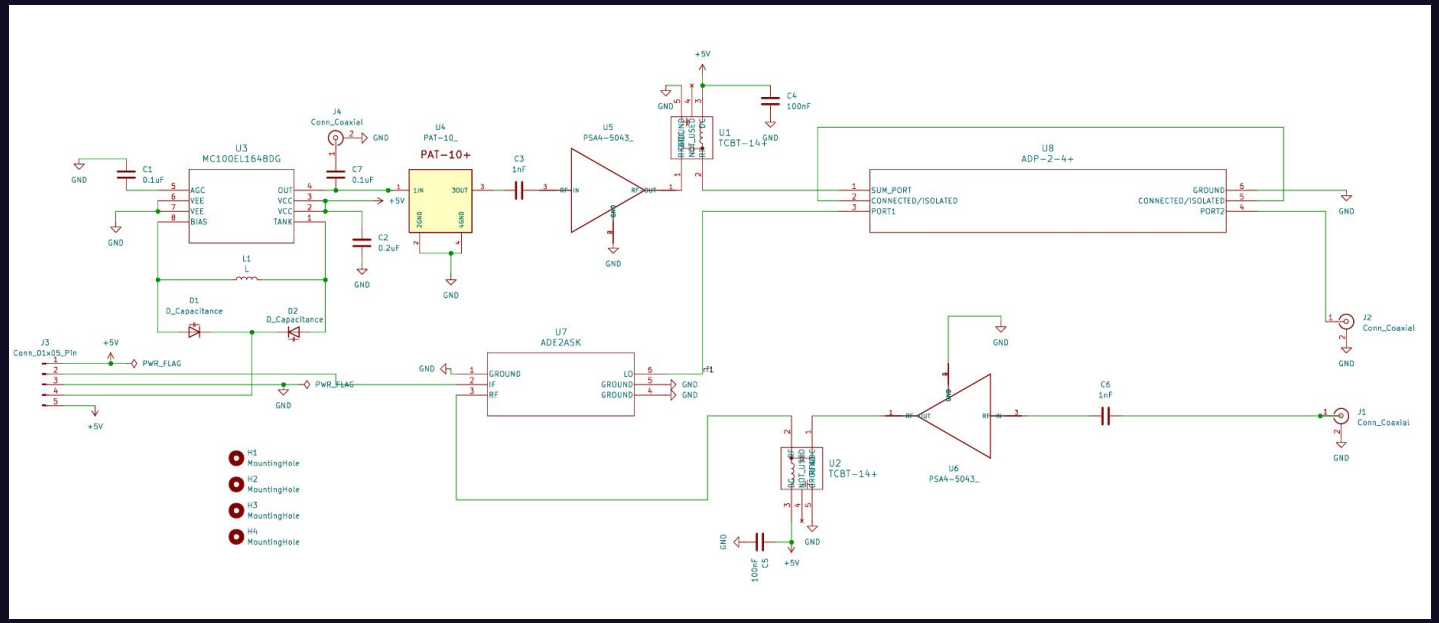
U3
MC100EL164BDG
AGC
VEE
VEE
BIAS
OUT
VCC
VCC
TANK
C1
0.1uF
C7
0.1uF
C2
0.2uF
L1
L
D1
D_Capacitance
D2
D_Capacitance
J4
Conn_Coaxial
U4
PAT-10_
PAT-10+
1IN
3OUT
2GND
4GND
C3
1nF
U5
PSA4-5043_
RF IN
RF OUT
U1
TCBT-14+
C4
100nF
U8
ADP-2-4+
SUM_PORT
CONNECTED/ISOLATED
PORT1
GROUND
CONNECTED/ISOLATED
PORT2
J2
Conn_Coaxial
J3
Conn_01x05_Pin
PWR_FLAG
U7
ADE2ASK
GROUND
IF
RF
LO
GROUND
GROUND
U2
TCBT-14+
U6
PSA4-5043_
C6
1nF
J1
Conn_Coaxial
C5
100nF
H1
MountingHole
H2
MountingHole
H3
MountingHole
H4
MountingHole
GND
+5V

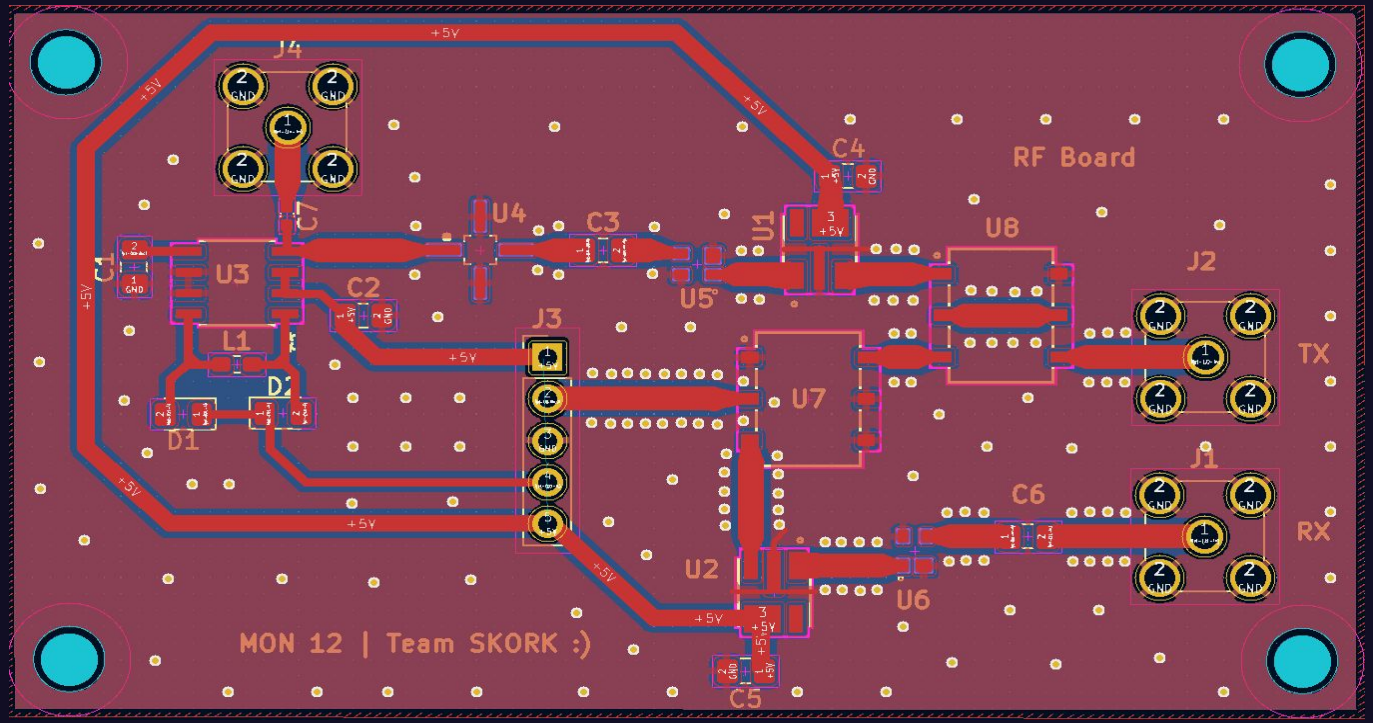
RF Board
MON 12 | Team SKORK :)
J4
J3
J2
J1
TX
RX
U1
U2
U3
U4
U5
U6
U7
U8
C1
C2
C3
C4
C5
C6
C7
L1
D1
D2
+5V
GND

Key learnings:

- PCB designing on KiCAD
- Impedance matching for RF signals, and how to calculate RF signal trace width
- Tapering of signal for IC pad whose's pad size is smaller than trace width
- RF component placement
- RF PCB designing common practices like, putting back side complete ground, and putting rf signal in a straight line and putting vias along the RF signals
- Putting **via fences** or **guard vias**
- Importing symbol, footprint and CAD file for components.

Justification of choices:

- Transmission line: Coplanar - I choose these so that I can use the ground plane on the front plane as well so that i can draw all the traces on the front plane

SKETCH OF CAD DESIGN

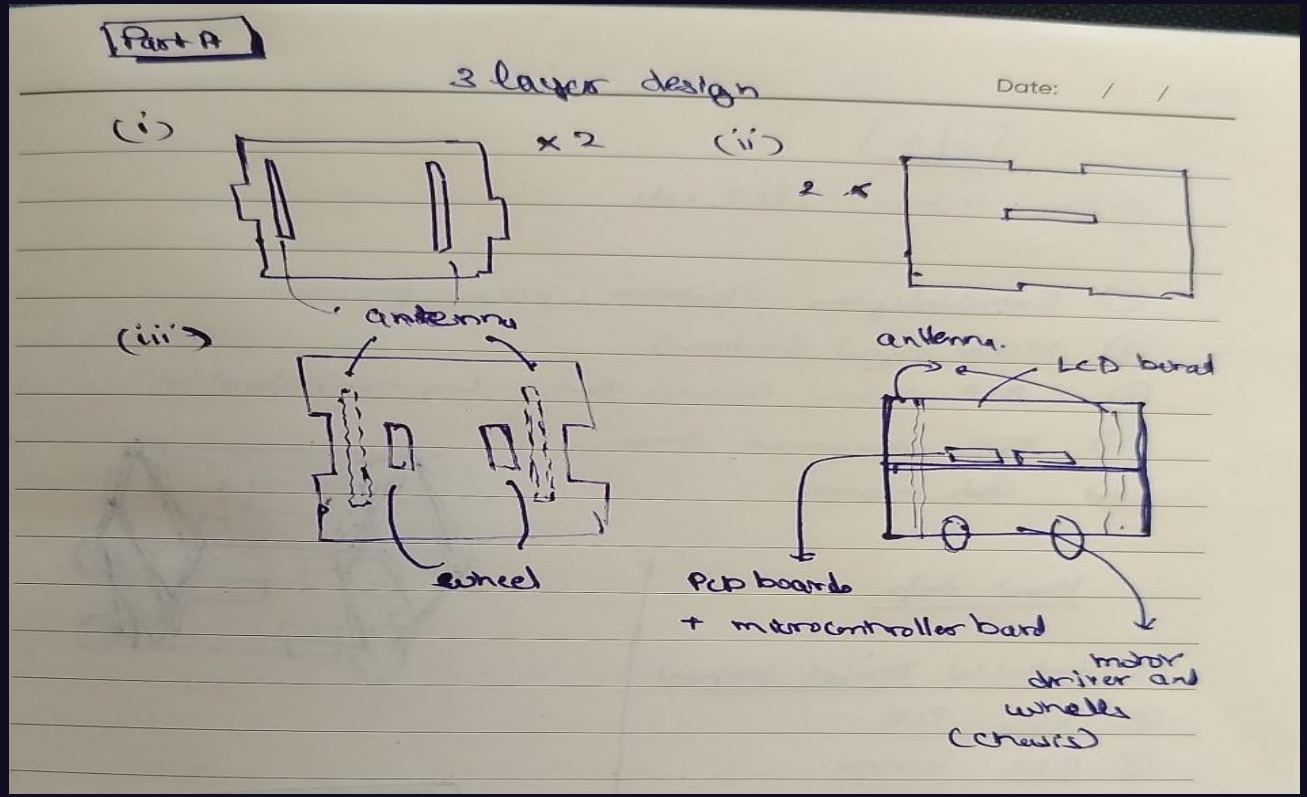

PENDING TASKS

04

PART A

- Signal Processing development and testing
- PCB testing of RF board
- Testing and interfacing of individual components: LCD display, DAC
- Testing Antenna: Directivity, gain and Antenna correction factor

PART B

- Testing on multiple samples and accordingly optimizing signal processing algorithm
- Final integration and testing using automated maneuver assembly

KEY RISKS THAT ARE NOT SOLVED YET

Part A:

Separate testing of VCO with calculated LC values

GANTT CHART DEVIATION

05

Proposed Gantt Chart

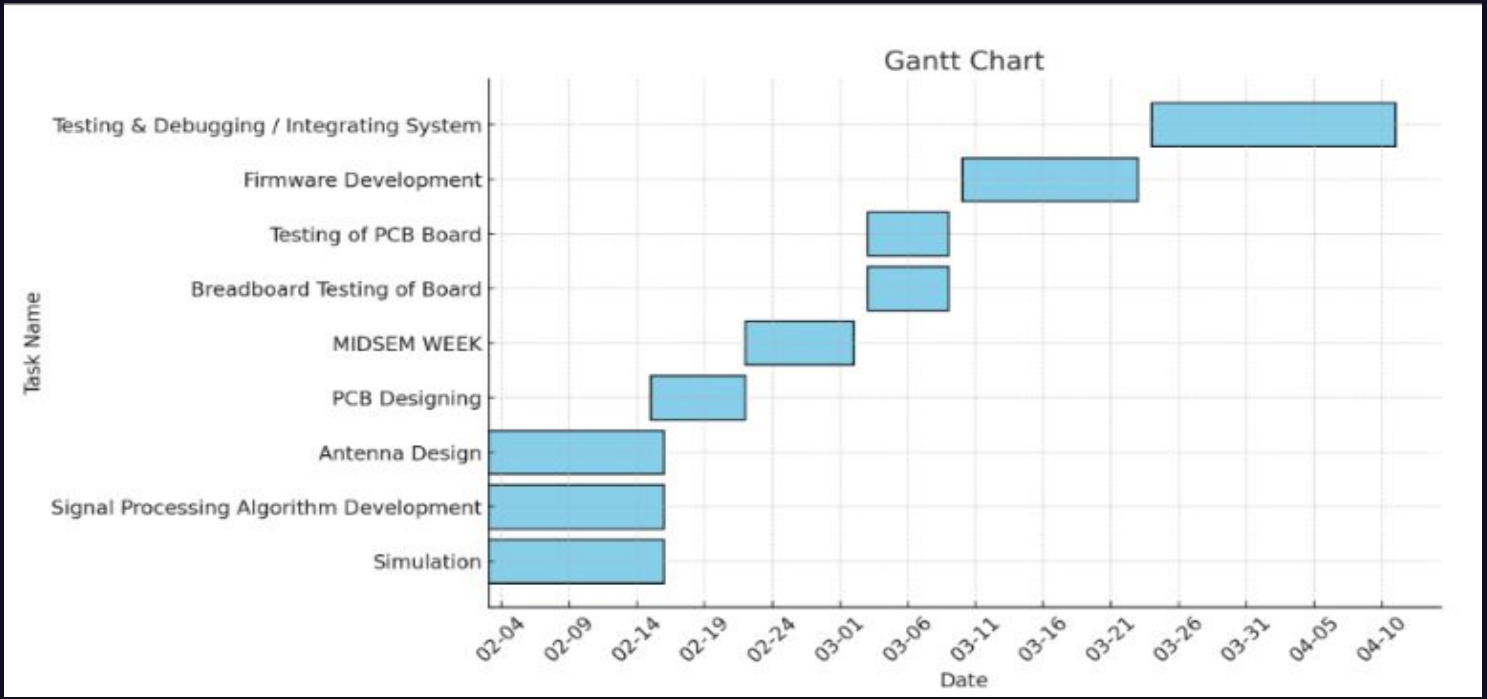

DEVIATIONS:

- PCB designing:
  - Finished by 20th March
  - Following the milestone requirements, focused rather on simulations in the timeline that we proposed in Gantt chart
- Firmware development:
  - Have been done on modular level for certain tasks, overall development yet to be done
  - For milestone 3 requirements, team focused on proof of concept validation and PCB designing in the earlier proposed timeline for this task
- Testing of PCB board:
  - To be done by 6th April
  - Deviated since PCB designing schedule was shifted, and effectively this part

WORK DISTRIBUTION

06

Part A	PCB soldering of LF board	Khushbu
	Testing of LF board	Ramya & Khushbu
	PCB soldering and testing of RF board	Kanak & Khushbu
	Firmware development for modular components and final integration	Ramya
	Signal Processing algorithm	Kanak & Oviya
	Antenna testing	Shiwani
	Automated maneuver mechanical design	Oviya
Part B	Integration of all the individual codes on STM32 end-to-end	Shiwani
	Signal processing algorithm optimization and improvisation (with multiple testing)	Shiwani
	Signal processing code implementation on STM32	Kanak & Oviya
	Use of PYNQ FPGA for faster computation of signal processing code (if required and time permits)	Kanak & Shiwani
	Automated maneuver mechanical design	Oviya

PLAN FOR FINAL DEMO

07

PART A

- A Radar system will move for around 3-5 m and scan a particular media which we will select on the LCD screen along with the depth, plot a B-Scan on LCD display in real time.

PART B

- Automated moving platform that moves the GPR module along with calibrated steps
- The choice of media pairs can be:
  - Concrete brick with metal bars
  - Rebars inside walls
  - Tiles width (interface between tiles(marble and hardened mortar)
- STM32 will generated pulses that will be integrated by RC-integrator circuit to generate triangular/sawtooth waveform inputted to the IVS-362 module
- Data will be sampled along x at distance of 0.5 cm or 1 cm
- Real-time processing will done on these signals and generated B-scan will be displayed either on an LCD screen or a connected PC

THANK YOU