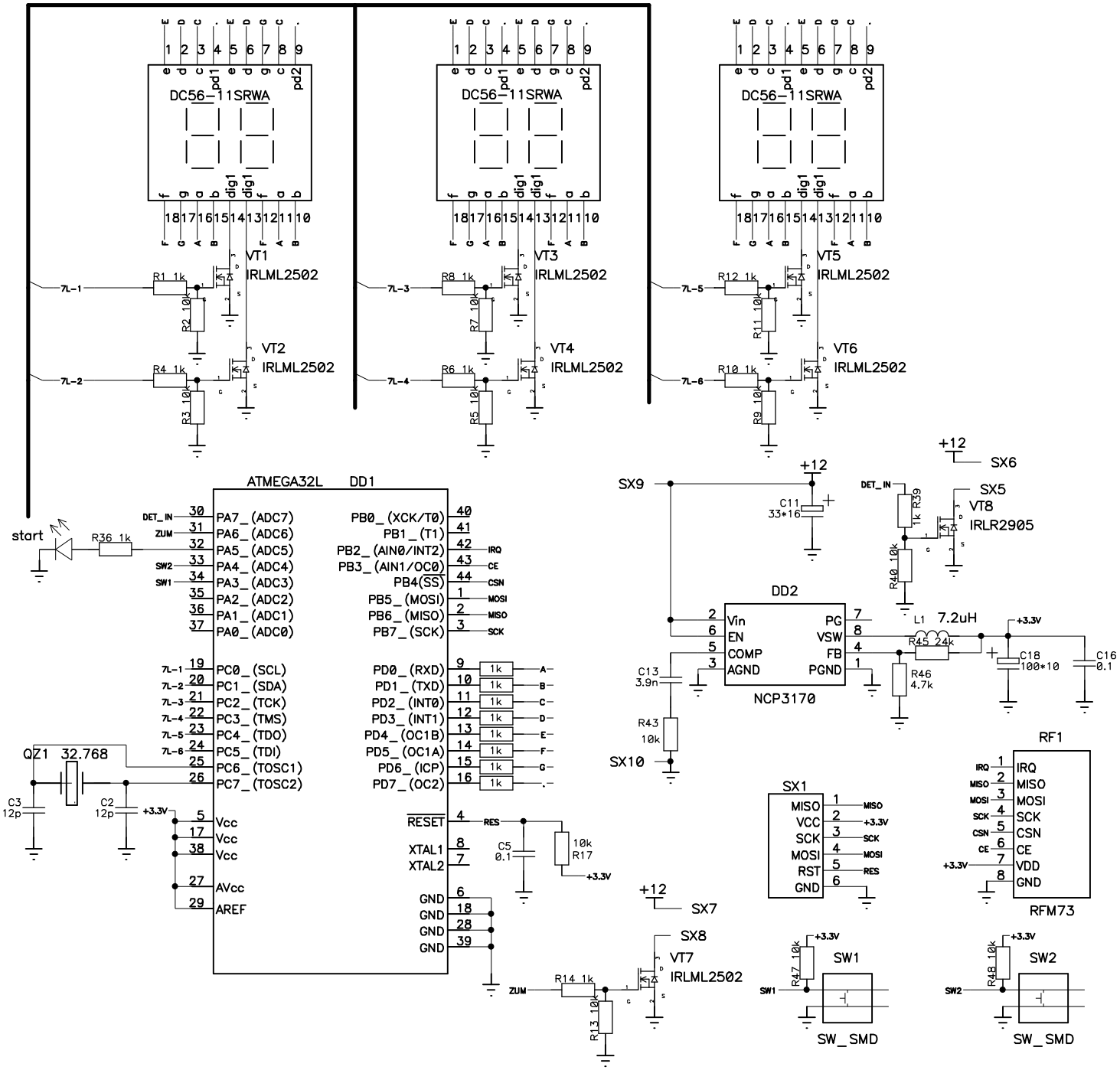
DC56-11SRWA
VT1 IRLML2502
VT2 IRLML2502
VT3 IRLML2502
VT4 IRLML2502
VT5 IRLML2502
VT6 IRLML2502
ATMEGA32L DD1
start
R36 1k
QZ1 32.768
C3 12p
C2 12p
+3.3V
+12
SX6
SX5
VT8 IRLR2905
SX9
C11 33*16
DD2
NCP3170
L1 7.2uH
R45 24k
R46 4.7k
C18 100*10
C16 0.1
C13 3.9n
R43 10k
SX10
RF1
RFM73
SX1
SX7
SX8
VT7 IRLML2502
R14 1k
R13 10k
C5 0.1
R17 10k
SW1
SW2
SW_SMD