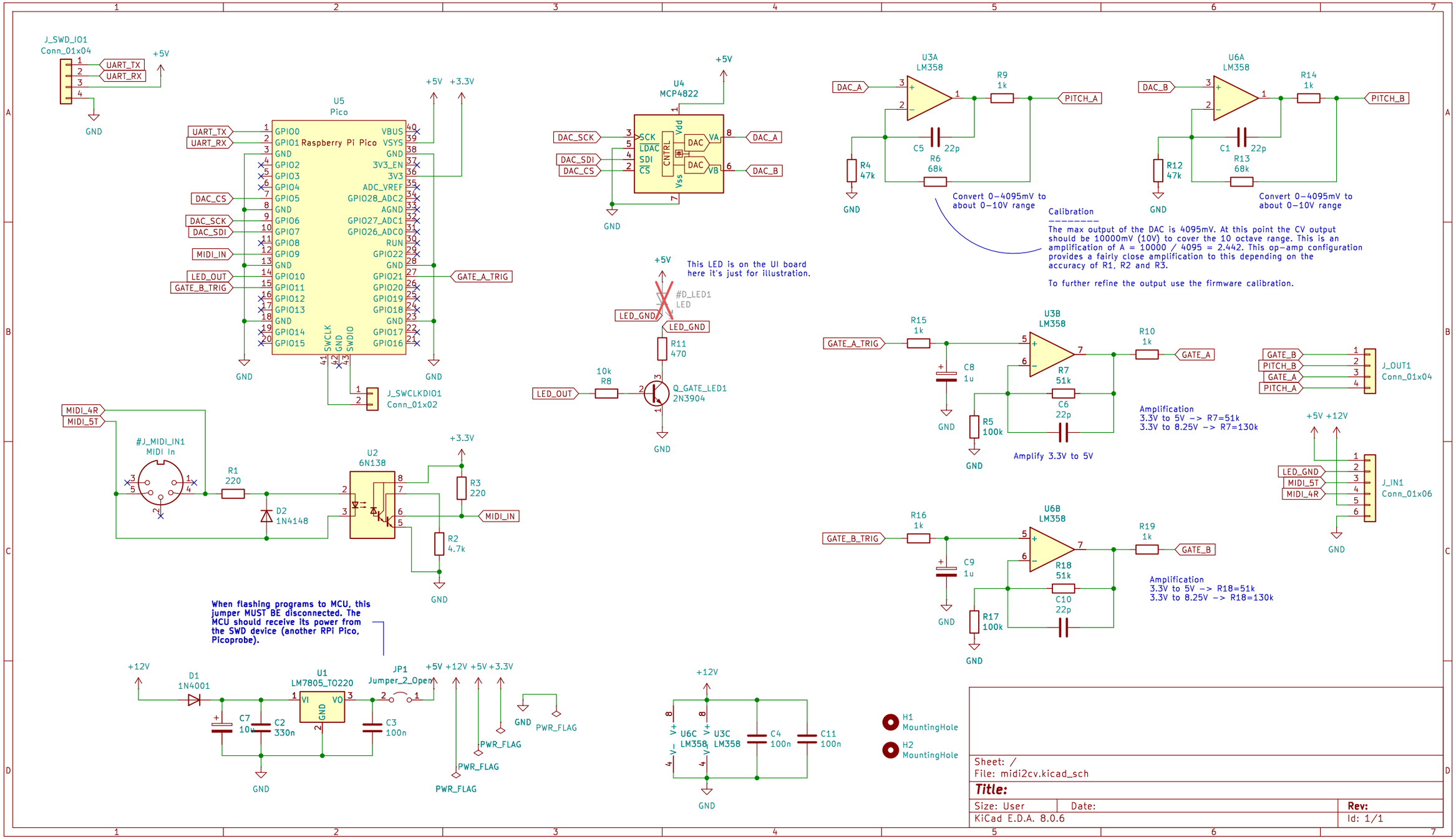
J_SWD_IO1
Conn_01x04
UART_TX
UART_RX
+5V
GND
U5
Pico
Raspberry Pi Pico
+3.3V
DAC_CS
DAC_SCK
DAC_SDI
MIDI_IN
LED_OUT
GATE_B_TRIG
GATE_A_TRIG
J_SWCLKDIO1
Conn_01x02
U4
MCP4822
DAC_A
DAC_B
This LED is on the UI board here it's just for illustration.
#D_LED1
LED
LED_GND
R11
470
10k
R8
Q_GATE_LED1
2N3904
U3A
LM358
R9
1k
PITCH_A
R4
47k
C5
22p
R6
68k
Convert 0-4095mV to about 0-10V range
Calibration

The max output of the DAC is 4095mV. At this point the CV output should be 10000mV (10V) to cover the 10 octave range. This is an amplification of A = 10000 / 4095 = 2.442. This op-amp configuration provides a fairly close amplification to this depending on the accuracy of R1, R2 and R3.
To further refine the output use the firmware calibration.
U6A
LM358
R14
1k
PITCH_B
R12
47k
C1
22p
R13
68k
U3B
LM358
R15
1k
C8
1u
R5
100k
R7
51k
C6
22p
R10
1k
GATE_A
Amplification
3.3V to 5V -> R7=51k
3.3V to 8.25V -> R7=130k
Amplify 3.3V to 5V
J_OUT1
Conn_01x04
J_IN1
Conn_01x06
U6B
LM358
R16
1k
C9
1u
R17
100k
R18
51k
C10
22p
R19
1k
GATE_B
Amplification
3.3V to 5V -> R18=51k
3.3V to 8.25V -> R18=130k
#J_MIDI_IN1
MIDI In
MIDI_4R
MIDI_5T
R1
220
D2
1N4148
U2
6N138
R3
220
R2
4.7k
When flashing programs to MCU, this jumper MUST BE disconnected. The MCU should receive its power from the SWD device (another RPi Pico, Picoprobe).
+12V
D1
1N4001
C7
10u
C2
330n
U1
LM7805_TO220
C3
100n
JP1
Jumper_2_Open
PWR_FLAG
U6C
LM358
U3C
LM358
C4
100n
C11
100n
H1
MountingHole
H2
MountingHole
Sheet: /
File: midi2cv.kicad_sch
Title:
Size: User
Date:
Rev:
KiCad E.D.A. 8.0.6
Id: 1/1