Modules

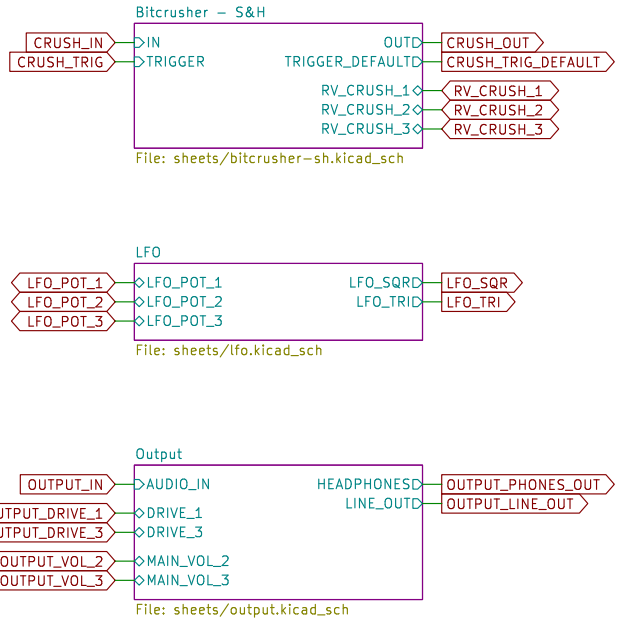

Power

I/O

Default patch connector

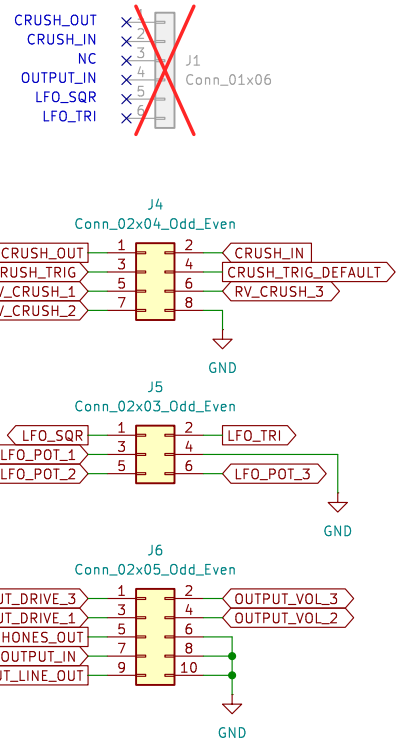

Shielding pairs
DO NOT GROUND ON UI BOARD!

H1 MountingHole
H2 MountingHole
H3 MountingHole
H4 MountingHole

Shmøergh

Sheet: /
File: utils-output-core.kicad_sch

Title: Utils / Output Core

Size: A4	Date: 2026-02-21	**Rev: 2**
KiCad E.D.A. 9.0.6		Id: 1/5

S&H notes Aug 20 2025:
– tested, works
– 2N3819 is significantly better for bitcrusher (audio) than other JFET's (e.g. J112)

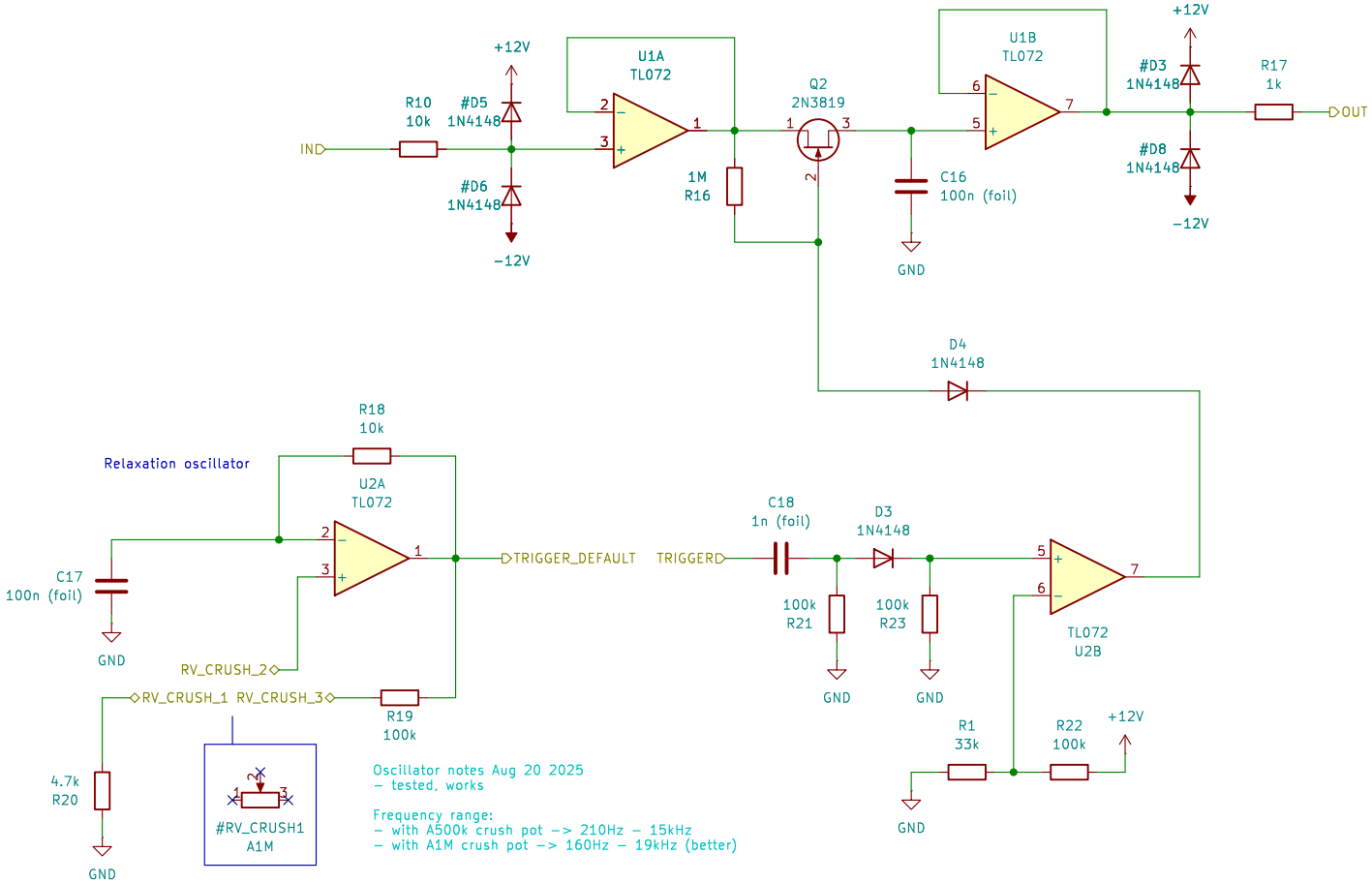

Oscillator notes Aug 20 2025
– tested, works

Frequency range:
– with A500k crush pot –> 210Hz – 15kHz
– with A1M crush pot –> 160Hz – 19kHz (better)

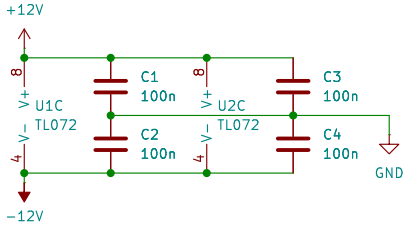

Shmøergh

Sheet: /Bitcrusher – S&H/
File: bitcrusher–sh.kicad_sch

Title: Utils / Output Core

Size: A4	Date: 2026–02–21	**Rev: 2**
KiCad E.D.A. 9.0.6		Id: 3/5

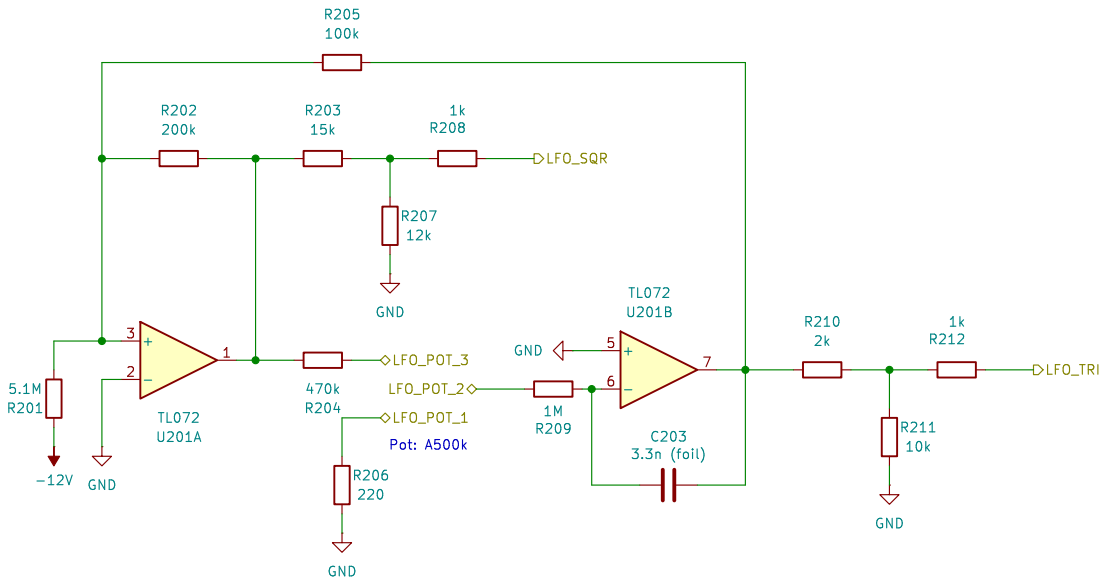

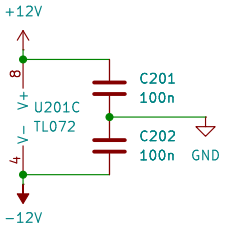

Shmøergh

Sheet: /LFO/
File: lfo.kicad_sch

Title: Utils / Output Core

Size: A4	Date: 2026-02-21	**Rev: 2**
KiCad E.D.A. 9.0.6		Id: 4/5

UI power connection

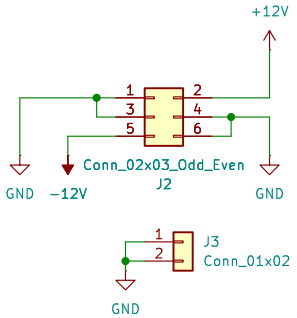

Eurorack PSU connection

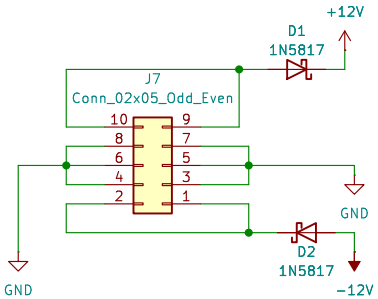

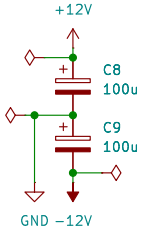

Shmøergh

Sheet: /Power/
File: power.kicad_sch

Title: Utils / Output Core

Size: A4	Date: 2026-02-21	**Rev: 2**
KiCad E.D.A. 9.0.6		Id: 4/5

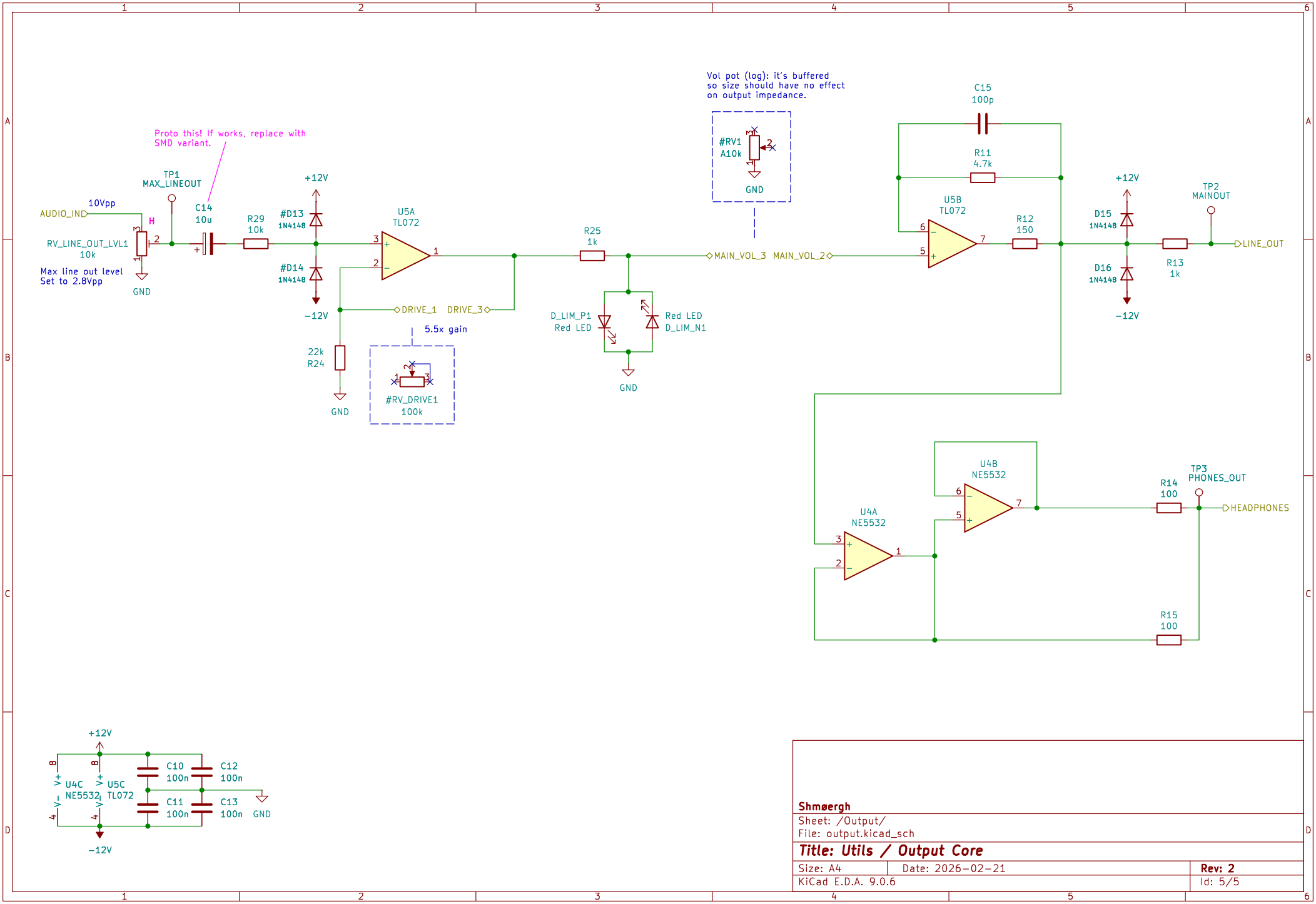

Shmøergh

Sheet: /Output/
File: output.kicad_sch

Title: Utils / Output Core

Size: A4	Date: 2026-02-21	**Rev: 2**
KiCad E.D.A. 9.0.6		Id: 5/5