the LFO rate. 1M felt too much so putting
a 1M resistor in parallel would turn it into
a ~500k quasi-log pot.

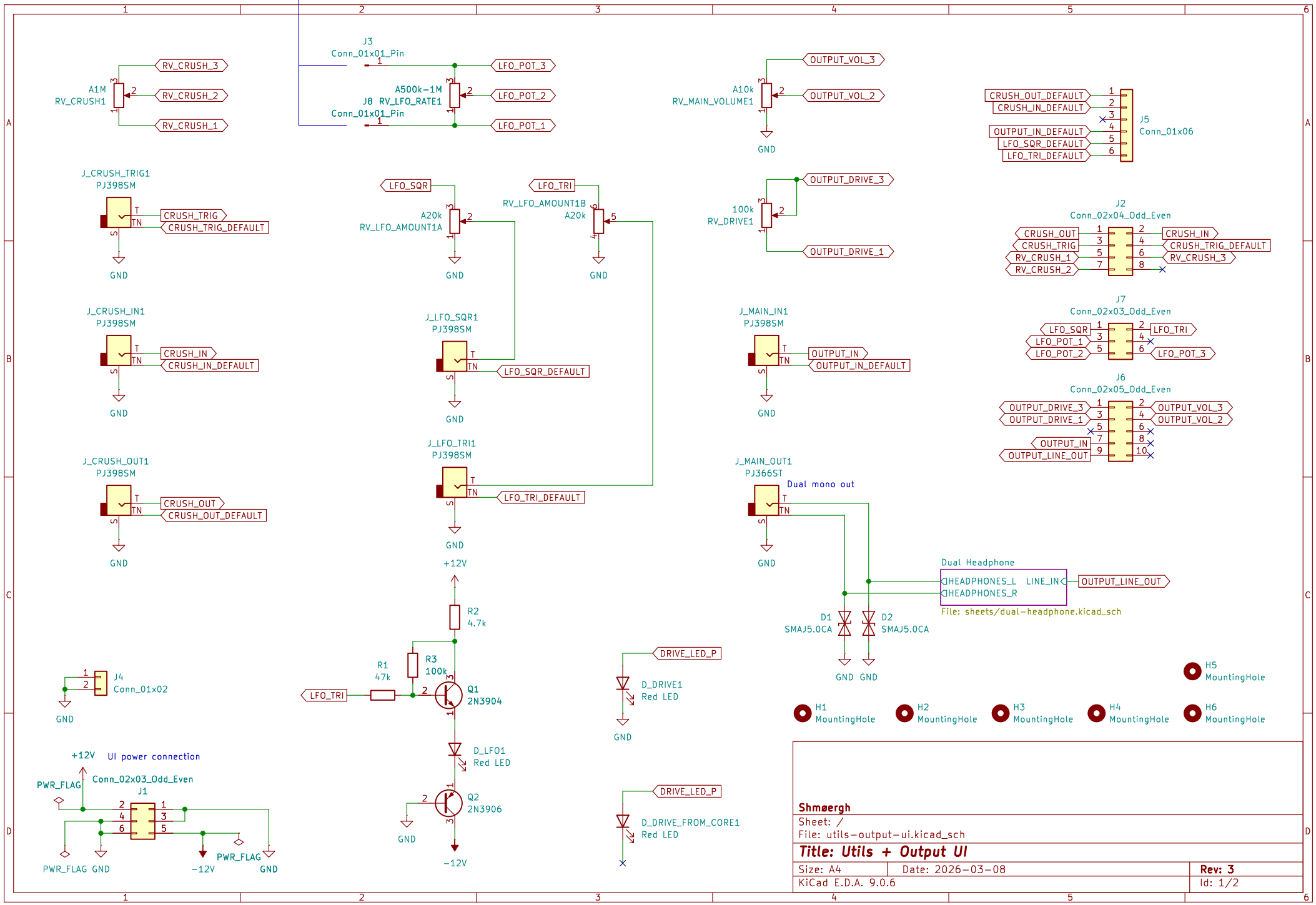

Shmøergh

Sheet: /

File: utils-output-ui.kicad_sch

Title: Utils + Output UI

Size: A4	Date: 2026-03-08	Rev: 3
KiCad E.D.A. 9.0.6		Id: 1/2

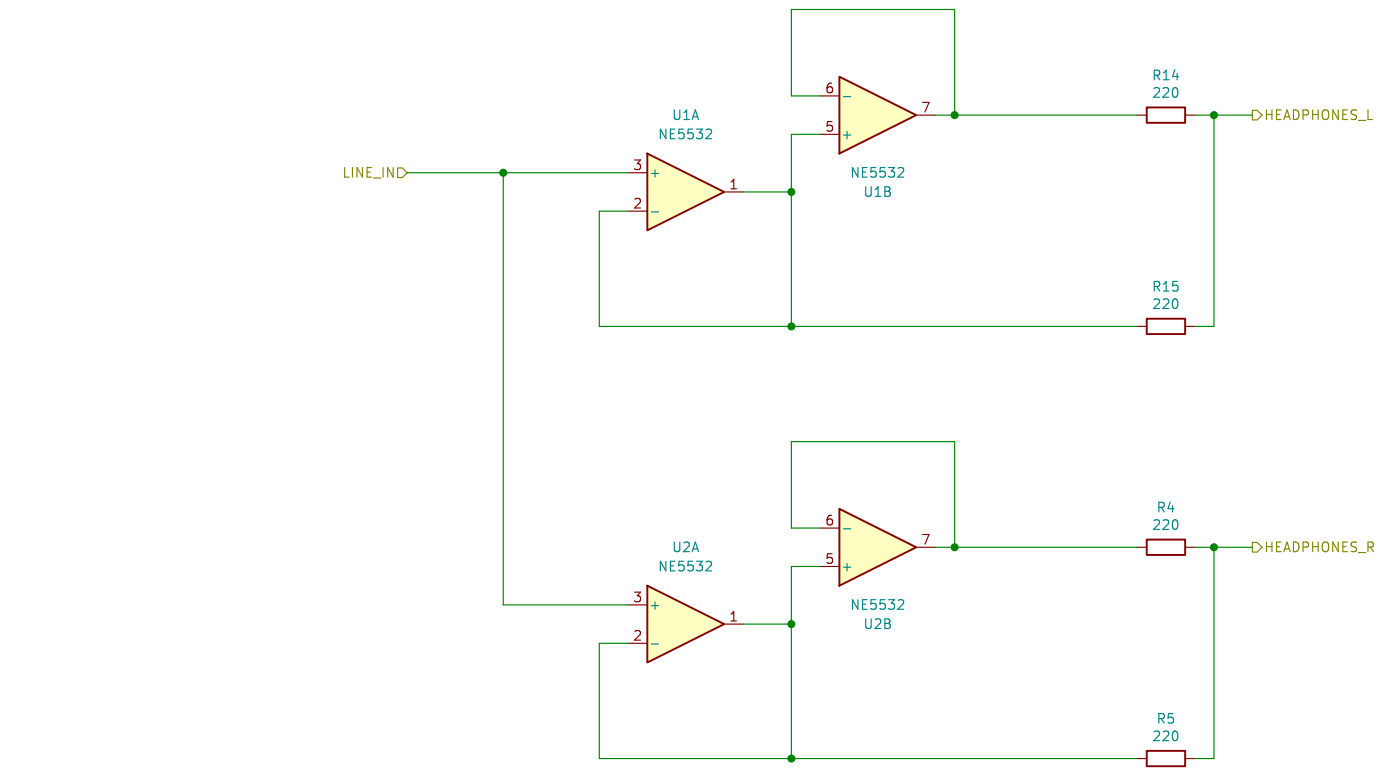

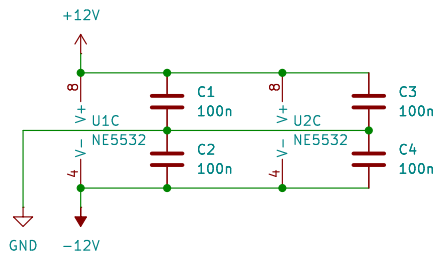

Shmøergh

Sheet: /Dual Headphone/
File: dual−headphone.kicad_sch

Title: Utils + Output UI

Size: A4	Date: 2026−03−08	**Rev: 3**
KiCad E.D.A. 9.0.6		Id: 2/2