Modules

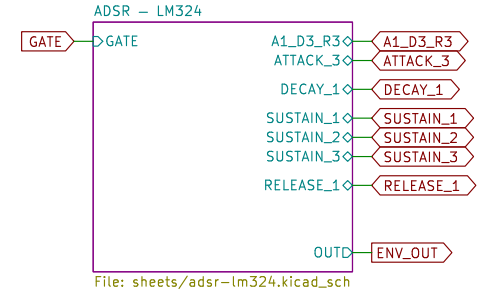

Power

I/O

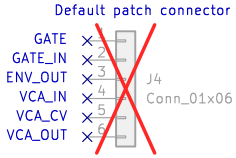

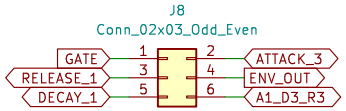

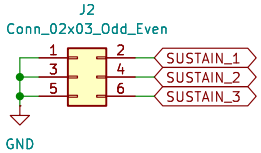

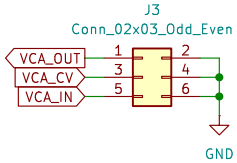

Shielding pairs
DO NOT GROUND ON UI BOARD!

H1 MountingHole
H2 MountingHole
H3 MountingHole
H4 MountingHole

Shmøergh

Sheet: /
File: adsr-vca-core.kicad_sch

Title: ADSR + VCA

Size: A4	Date: 2026-03-08	**Rev: 3**
KiCad E.D.A. 9.0.6		Id: 1/4

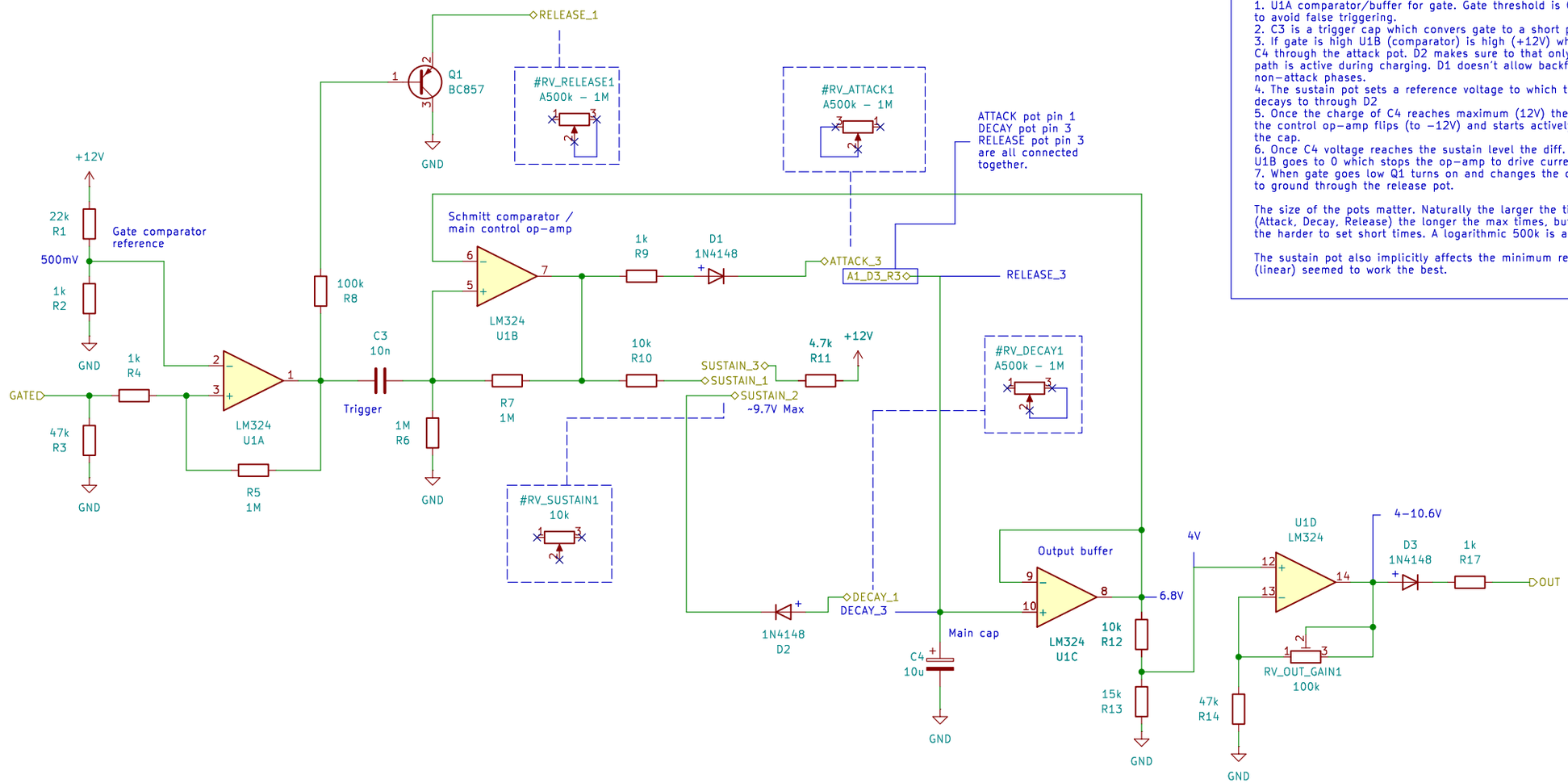

HOW DOES IT WORK?

1. U1A comparator/buffer for gate. Gate threshold is 0.5V to avoid false triggering.
2. C3 is a trigger cap which convers gate to a short pulse
3. If gate is high U1B (comparator) is high (+12V) which charges C4 through the attack pot. D2 makes sure to that only the attack path is active during charging. D1 doesn't allow backflow during non–attack phases.
4. The sustain pot sets a reference voltage to which the env. decays to through D2
5. Once the charge of C4 reaches maximum (12V) the output of the control op–amp flips (to –12V) and starts actively discharging the cap.
6. Once C4 voltage reaches the sustain level the diff. input of U1B goes to 0 which stops the op–amp to drive current.
7. When gate goes low Q1 turns on and changes the discharge path to ground through the release pot.

The size of the pots matter. Naturally the larger the timing pots (Attack, Decay, Release) the longer the max times, but also the harder to set short times. A logarithmic 500k is a sweet spot.

The sustain pot also implicitly affects the minimum release: 10k (linear) seemed to work the best.

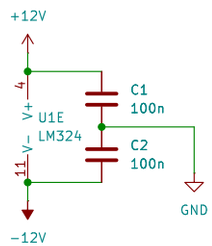

Shmøergh

Sheet: /ADSR – LM324/

File: adsr–lm324.kicad_sch

Title: ADSR + VCA

Size: User	Date: 2026–03–08	**Rev: 3**
KiCad E.D.A. 9.0.6		Id: 3/4

There was a crosstalk issue because the 100k resistor was too far from the input pin header on the PCB. It's now moved as close to it as possible so that the input signal is scaled down drastically as it enters the board.

Note that now there's a 100k resistor on the UI board too for testing purposes. Either that OR R18 (on this board) should be used, so make sure to short one of them.

CV inputs can be mixed on the UI board by using 200k input resistors on all inputs.

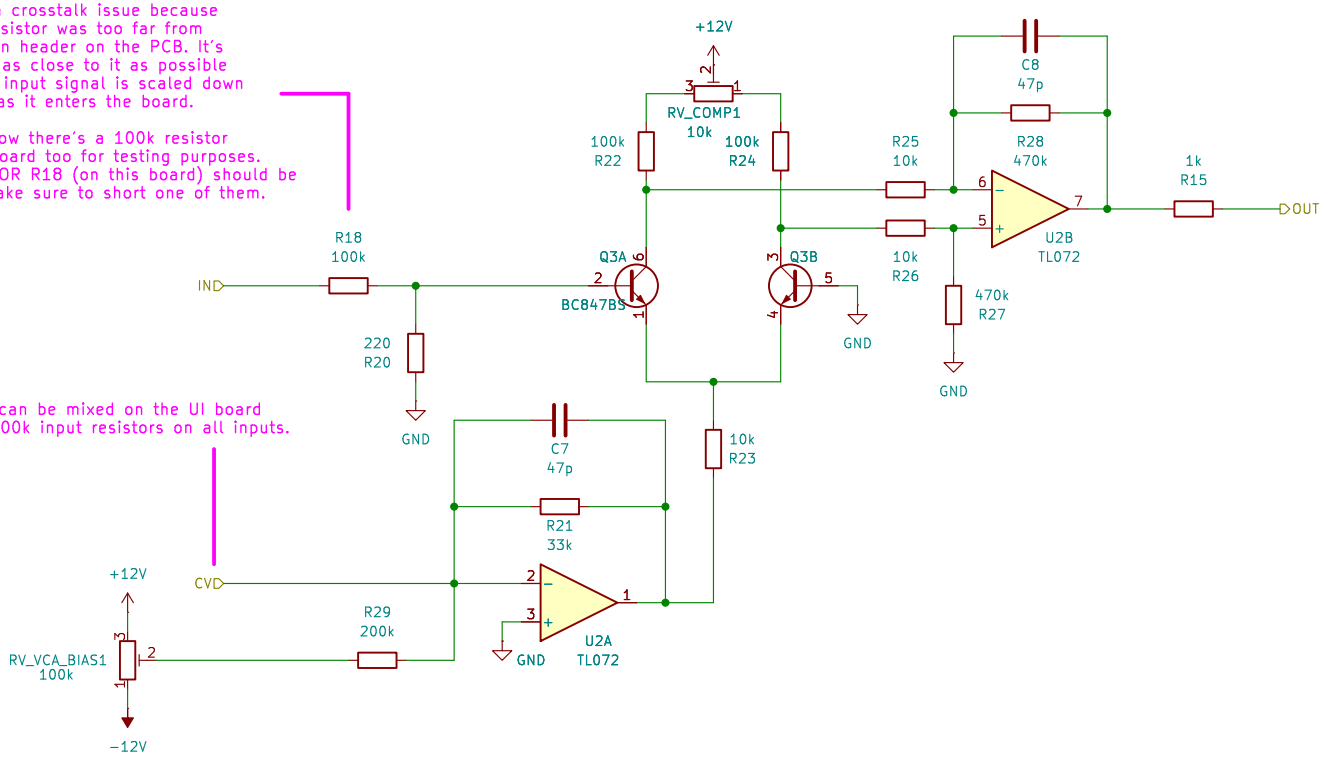

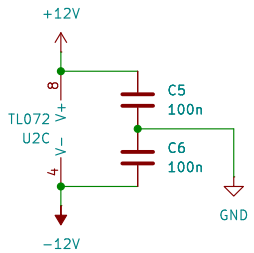

Shmøergh

Sheet: /VCA/
File: vca.kicad_sch

Title: ADSR + VCA

Size: A4	Date: 2026-03-08	**Rev: 3**
KiCad E.D.A. 9.0.6		Id: 4/4

UI power connection

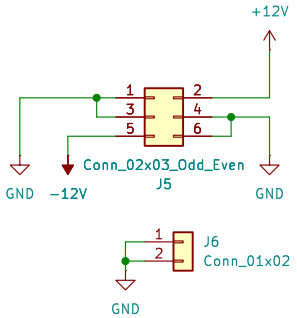

Eurorack PSU connection

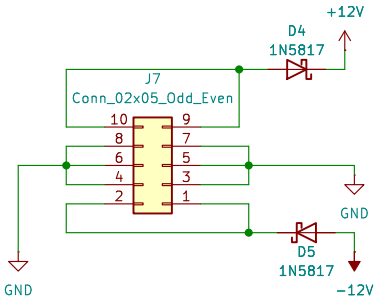

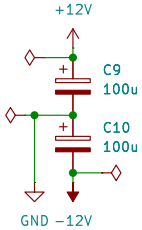

Shmøergh

Sheet: /Power/
File: power.kicad_sch

Title: ADSR + VCA

Size: A4	Date: 2026-03-08	**Rev: 3**
KiCad E.D.A. 9.0.6		Id: 4/4