Filter

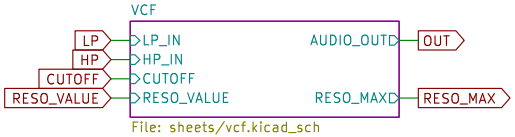

Power

I/O

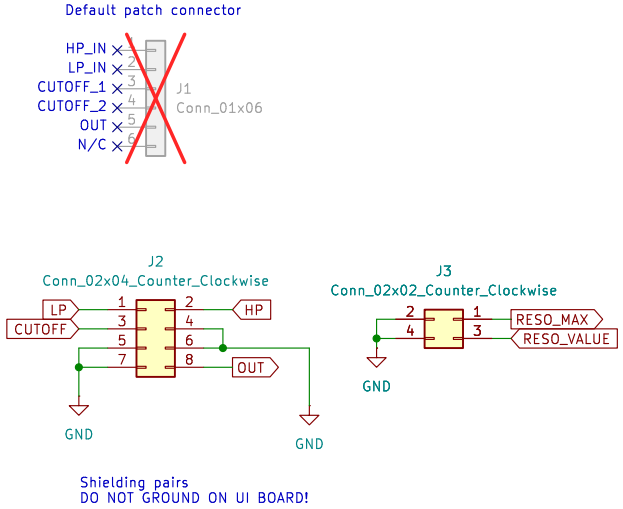

H1 MountingHole
H2 MountingHole
H3 MountingHole
H4 MountingHole

Shmøergh

Sheet: /
File: vcf-core.kicad_sch

Title: Moduleur VCF

Size: A4	Date: 2026-02-21	**Rev: 1**
KiCad E.D.A. 9.0.6		Id: 1/3

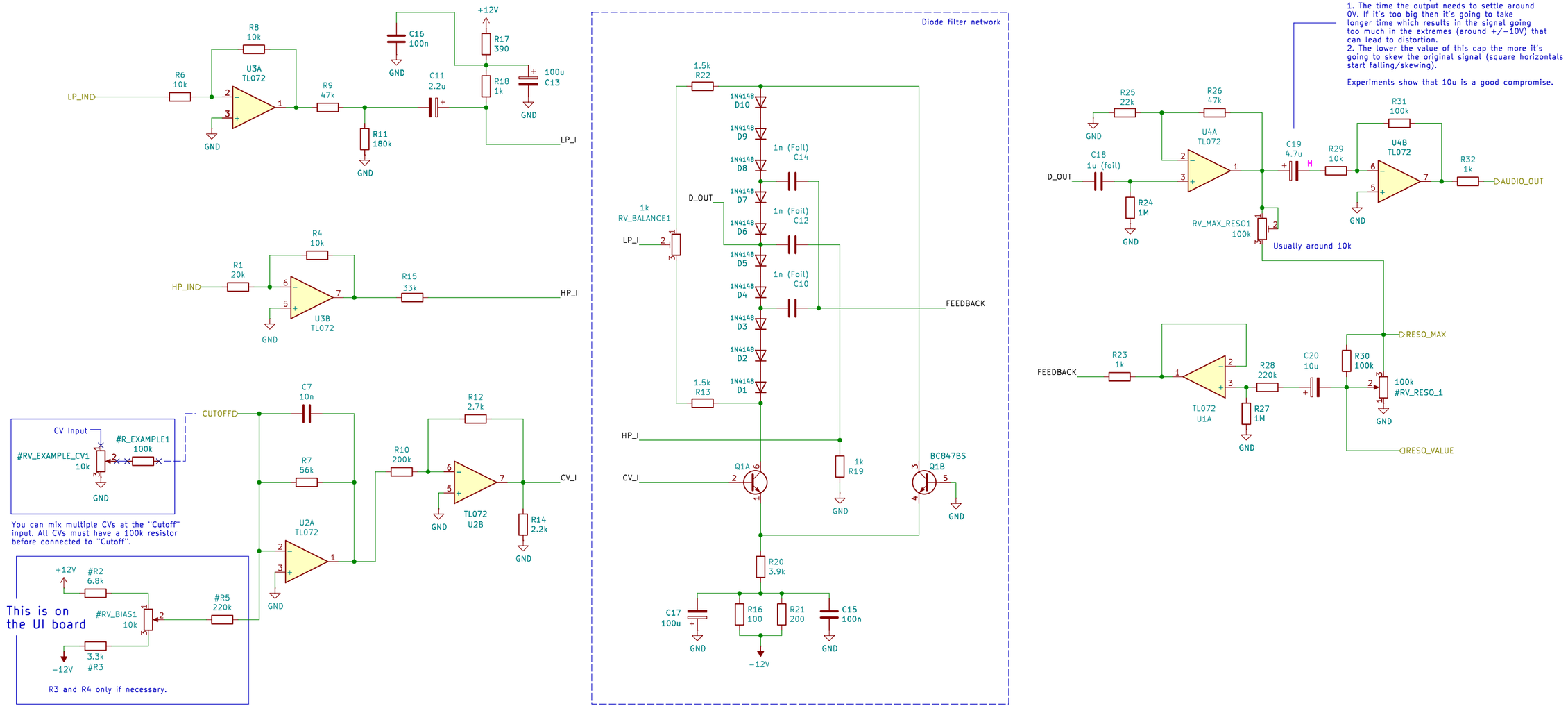

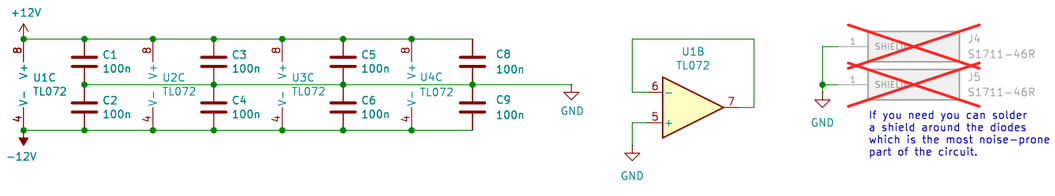

H = Hand soldered

Shmøergh	
Sheet: /VCF/	
File: vcf.kicad_sch	
Title: Moduleur VCF	
Size: User	Date: 2026-02-21
KiCad E.D.A. 9.0.6	Rev: 1
	Id: 3/3

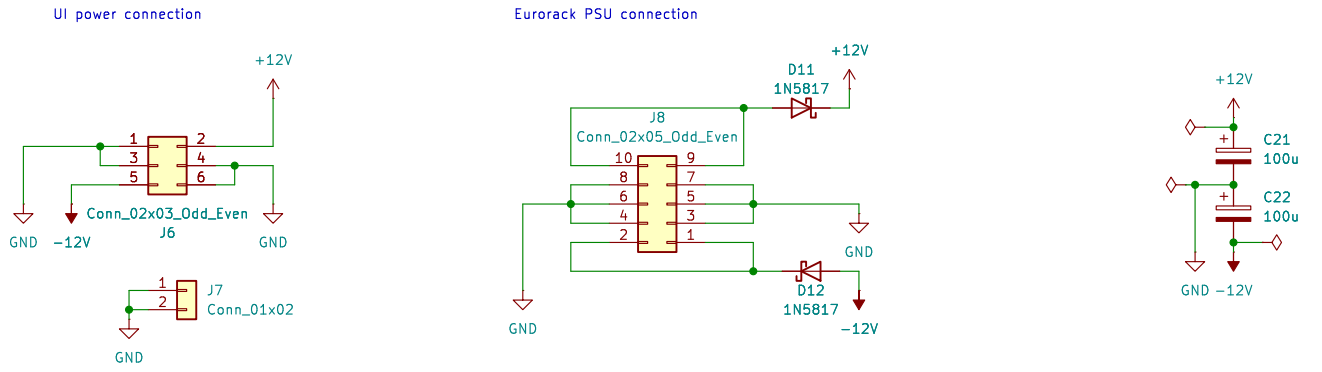

Shmøergh

Sheet: /Power/
File: power.kicad_sch

Title: Moduleur VCF

Size: A4	Date: 2026-02-21	**Rev: 1**
KiCad E.D.A. 9.0.6		Id: 4/3