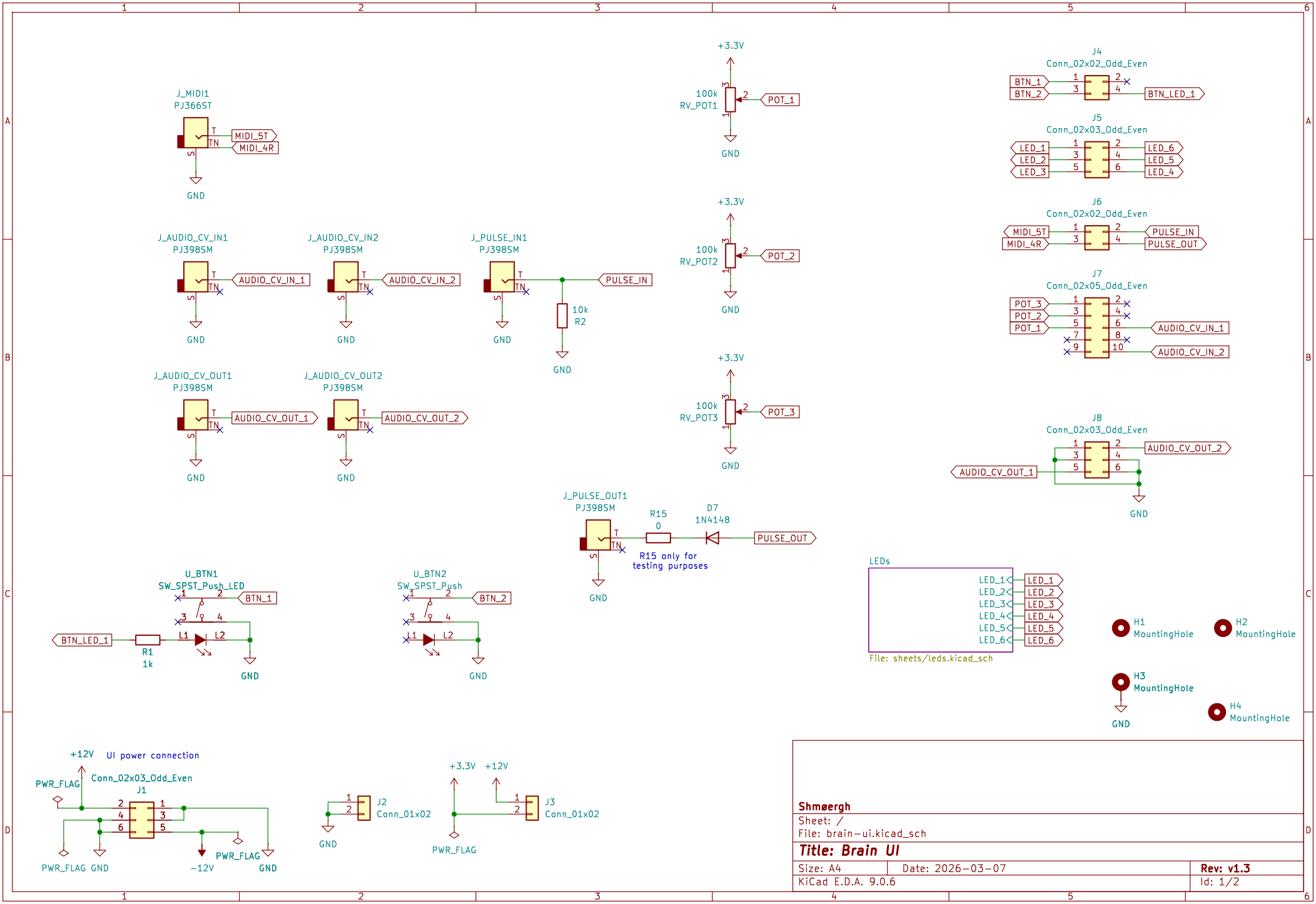
J_MIDI1
PJ366ST
MIDI_5T
MIDI_4R
GND
J_AUDIO_CV_IN1
PJ398SM
AUDIO_CV_IN_1
J_AUDIO_CV_IN2
PJ398SM
AUDIO_CV_IN_2
J_PULSE_IN1
PJ398SM
PULSE_IN
10k
R2
J_AUDIO_CV_OUT1
PJ398SM
AUDIO_CV_OUT_1
J_AUDIO_CV_OUT2
PJ398SM
AUDIO_CV_OUT_2
+3.3V
100k
RV_POT1
POT_1
RV_POT2
POT_2
RV_POT3
POT_3
J4
Conn_02x02_Odd_Even
BTN_1
BTN_2
BTN_LED_1
J5
Conn_02x03_Odd_Even
LED_1
LED_2
LED_3
LED_6
LED_5
LED_4
J6
Conn_02x02_Odd_Even
MIDI_5T
MIDI_4R
PULSE_IN
PULSE_OUT
J7
Conn_02x05_Odd_Even
POT_3
POT_2
POT_1
AUDIO_CV_IN_1
AUDIO_CV_IN_2
J8
Conn_02x03_Odd_Even
AUDIO_CV_OUT_2
AUDIO_CV_OUT_1
J_PULSE_OUT1
PJ398SM
R15
0
D7
1N4148
PULSE_OUT
R15 only for
testing purposes
U_BTN1
SW_SPST_Push_LED
BTN_1
BTN_LED_1
R1
1k
L1
L2
U_BTN2
SW_SPST_Push
BTN_2
LEDs
File: sheets/leds.kicad_sch
H1
MountingHole
H2
MountingHole
H3
MountingHole
H4
MountingHole
+12V
UI power connection
PWR_FLAG
Conn_02x03_Odd_Even
J1
-12V
J2
Conn_01x02
+3.3V
+12V
J3
Conn_01x02
Shmøergh
Sheet: /
File: brain-ui.kicad_sch
Title: Brain UI
Size: A4
Date: 2026-03-07
Rev: v1.3
KiCad E.D.A. 9.0.6
Id: 1/2

Shmøergh

Sheet: /LEDs/
File: leds.kicad_sch

Title: Brain UI

Size: A4	Date: 2026-03-07	**Rev: v1.3**
KiCad E.D.A. 9.0.6		Id: 2/2