Raw oscillator & wave shaping

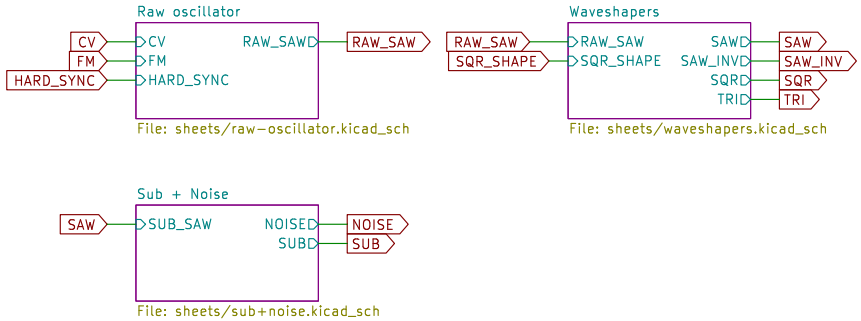

Power

I/O

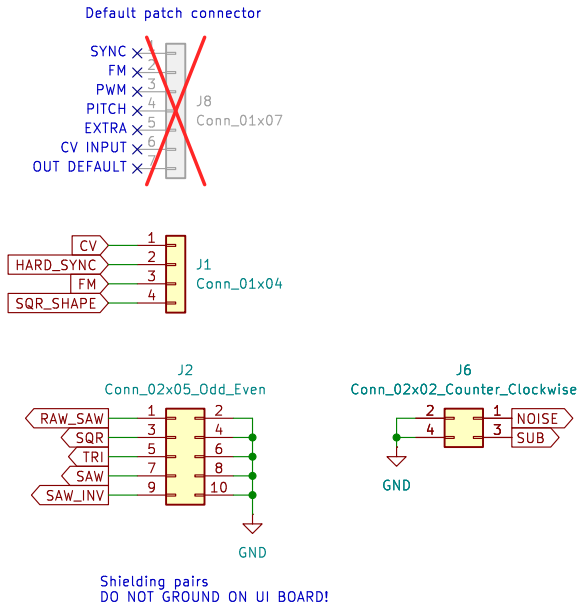

H1 MountingHole
H2 MountingHole
H3 MountingHole
H4 MountingHole

Shmøergh

Sheet: /
File: vco-core.kicad_sch

Title: Moduleur VCO core

Size: A4	Date: 2026-02-21	**Rev: 1**
KiCad E.D.A. 9.0.6		Id: 1/5

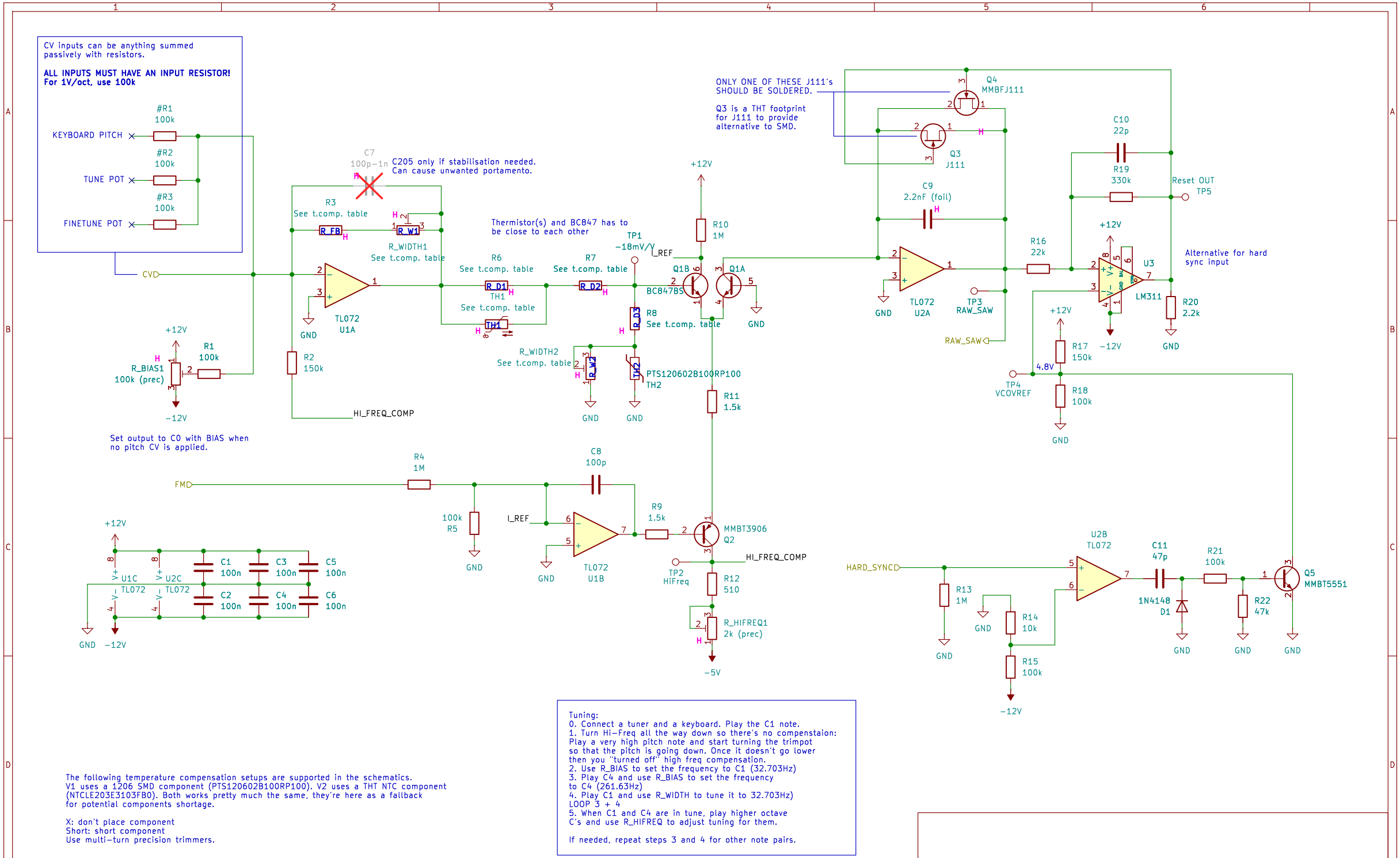

Tuning:
0. Connect a tuner and a keyboard. Play the C1 note.
1. Turn Hi–Freq all the way down so there's no compenstaion: Play a very high pitch note and start turning the trimpot so that the pitch is going down. Once it doesn't go lower then you "turned off" high freq compensation.
2. Use R_BIAS to set the frequency to C1 (32.703Hz)
3. Play C4 and use R_BIAS to set the frequency to C4 (261.63Hz)
4. Play C1 and use R_WIDTH to tune it to 32.703Hz)
LOOP 3 + 4
5. When C1 and C4 are in tune, play higher octave C's and use R_HIFREQ to adjust tuning for them.

If needed, repeat steps 3 and 4 for other note pairs.

The following temperature compensation setups are supported in the schematics.
V1 uses a 1206 SMD component (PTS120602B100RP100). V2 uses a THT NTC component (NTCLE203E3103FB0). Both works pretty much the same, they're here as a fallback for potential components shortage.

X: don't place component
Short: short component
Use multi–turn precision trimmers.

Temperature compenstion options:

	R_FB	R_W1	R_D1	TH1	R_D2	R_D3	TH2	R_W2
V1:	91k	20k	Short	X	6.2k(50ppm)	4.22(50ppm)	PTS120602B100RP100	X
V2:	22k	Short	11k	NTCLE203E3103FB0	27k	2.7k	X	500ohm

Shmøergh
Sheet: /Raw oscillator/
File: raw–oscillator.kicad_sch

Title: Moduleur VCO core

Size: User	Date: 2026–02–21	**Rev: 1**
KiCad E.D.A. 9.0.6		Id: 2/5

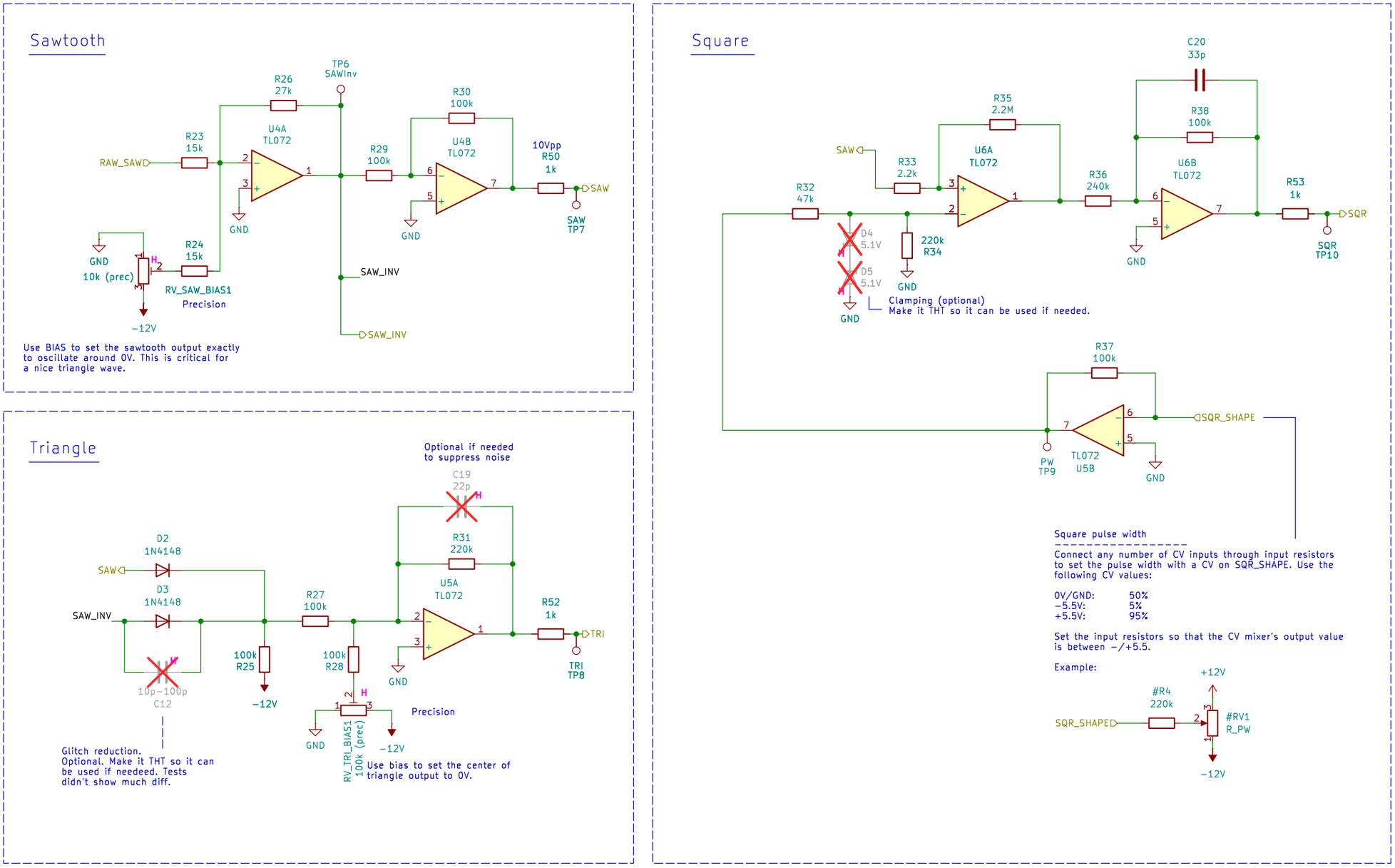

Shmøergh

Sheet: /Waveshapers/

File: waveshapers.kicad_sch

Title: Moduleur VCO core

Size: User	Date: 2026-02-21	Rev: 1
KiCad E.D.A. 9.0.6		Id: 3/5

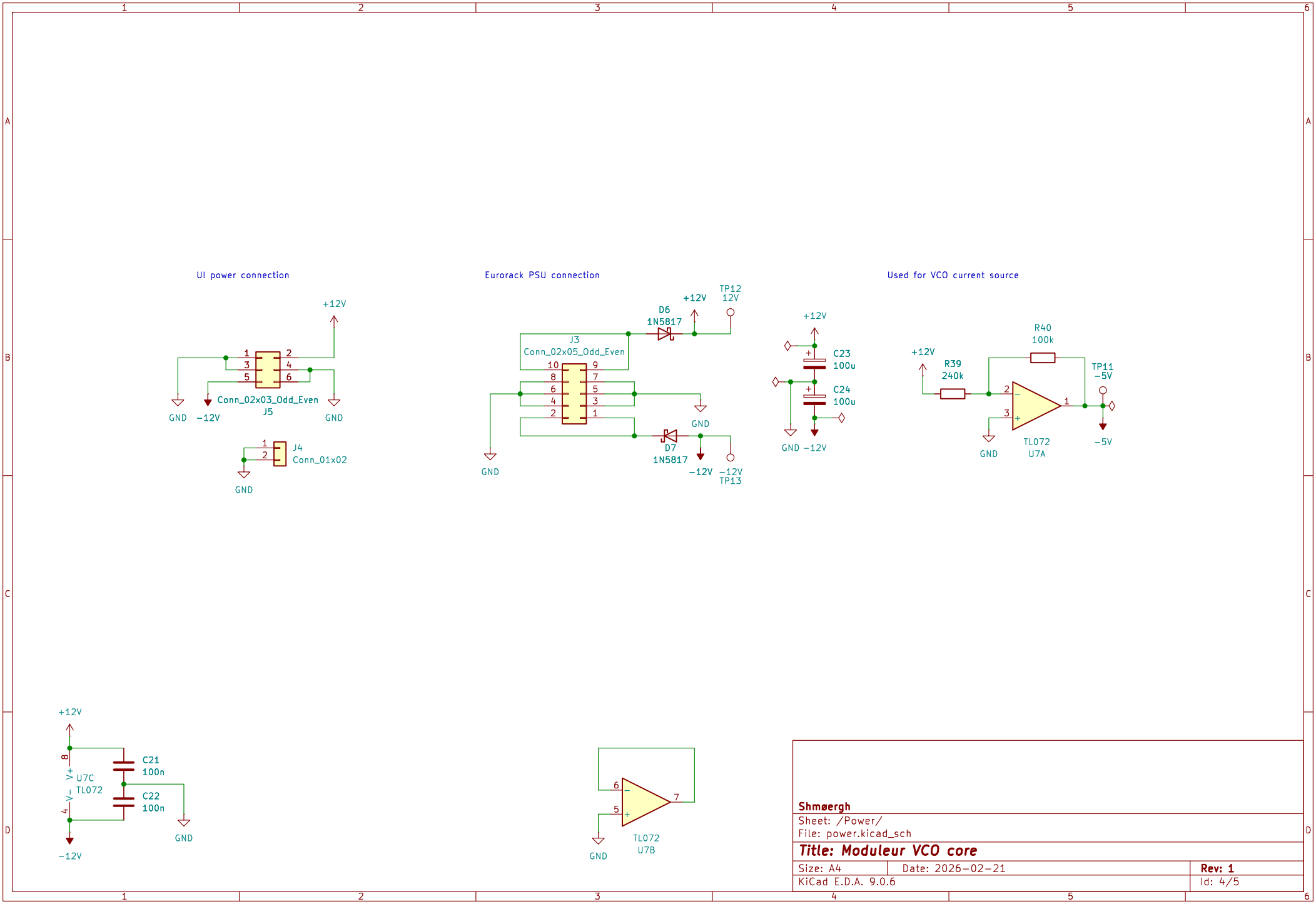
UI power connection
+12V
GND
-12V
Conn_02x03_Odd_Even
J5
GND
J4
Conn_01x02
GND
Eurorack PSU connection
+12V
TP12
12V
D6
1N5817
J3
Conn_02x05_Odd_Even
GND
D7
1N5817
GND
-12V
-12V
TP13
GND
+12V
C23
100u
C24
100u
GND
-12V
Used for VCO current source
R40
100k
+12V
R39
240k
TP11
-5V
TL072
U7A
GND
-5V
+12V
C21
100n
U7C
TL072
C22
100n
GND
-12V
TL072
U7B
GND
Shmøergh
Sheet: /Power/
File: power.kicad_sch
Title: Moduleur VCO core
Size: A4
Date: 2026-02-21
Rev: 1
KiCad E.D.A. 9.0.6
Id: 4/5

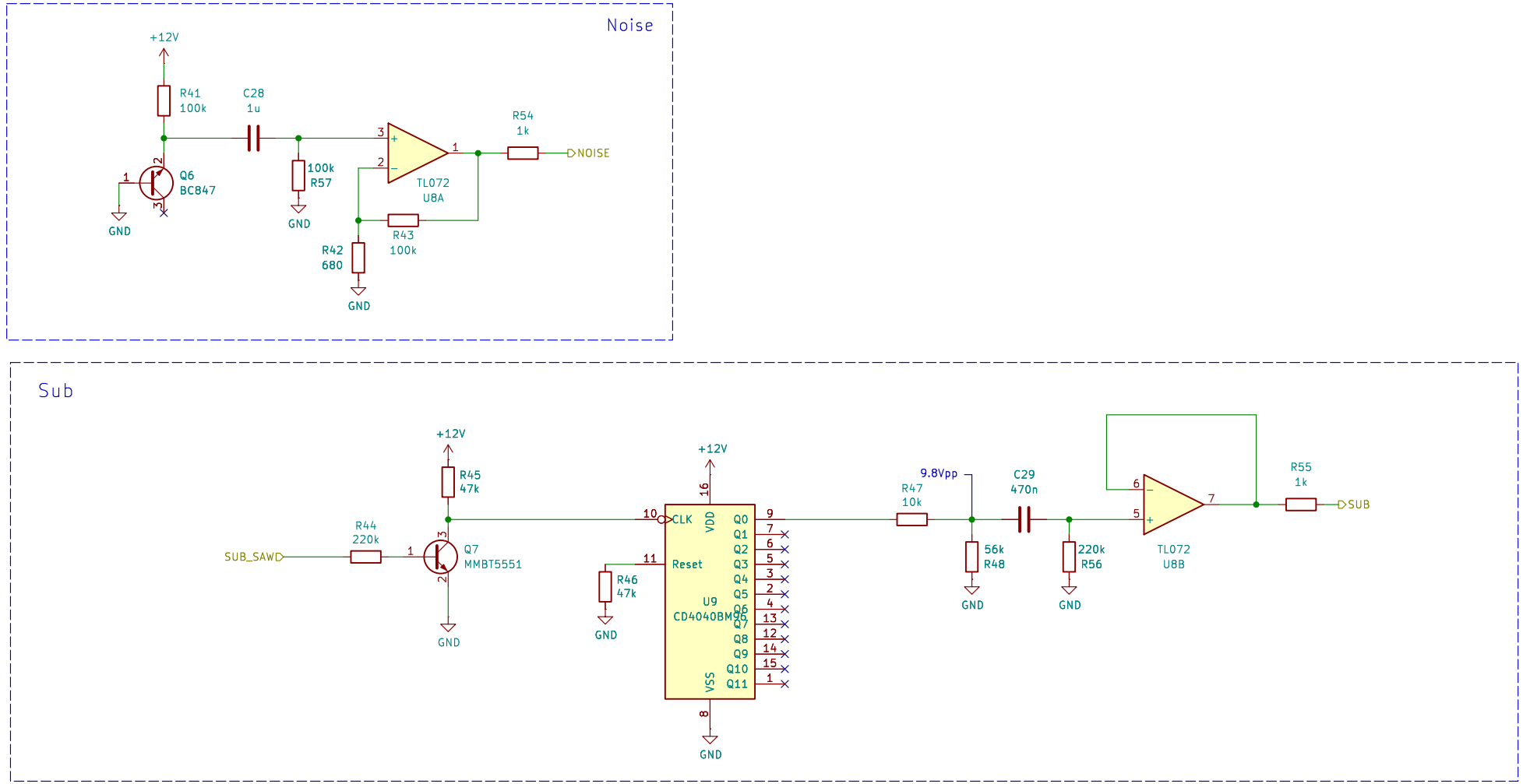

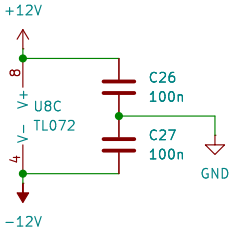

Shmøergh

Sheet: /Sub + Noise/
File: sub+noise.kicad_sch

Title: Moduleur VCO core

Size: A4	Date: 2026-02-21	**Rev: 1**
KiCad E.D.A. 9.0.6		Id: 5/5