## Sidechain mixer

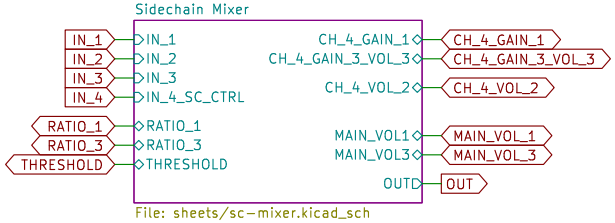


## Power

## I/O

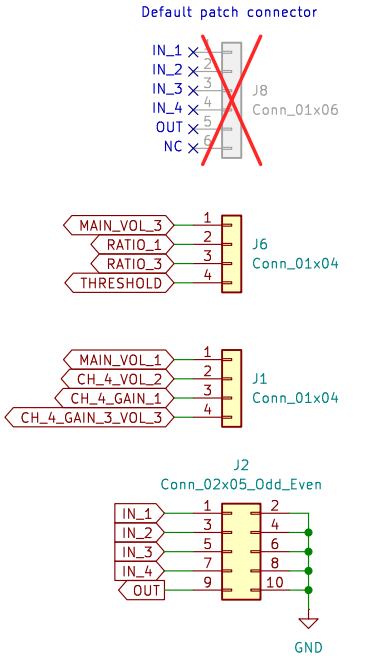


H1 MountingHole
H2 MountingHole
H3 MountingHole
H4 MountingHole

**Shmøergh**

Sheet: /
File: sidechain-mixer-core.kicad_sch

**Title: Moduleur Mixer & sidechain compressor**

| | | |
|---|---|---|
| Size: A4 | Date: 2025-12-11 | **Rev: 1** |
| KiCad E.D.A. 9.0.6 | | Id: 1/3 |

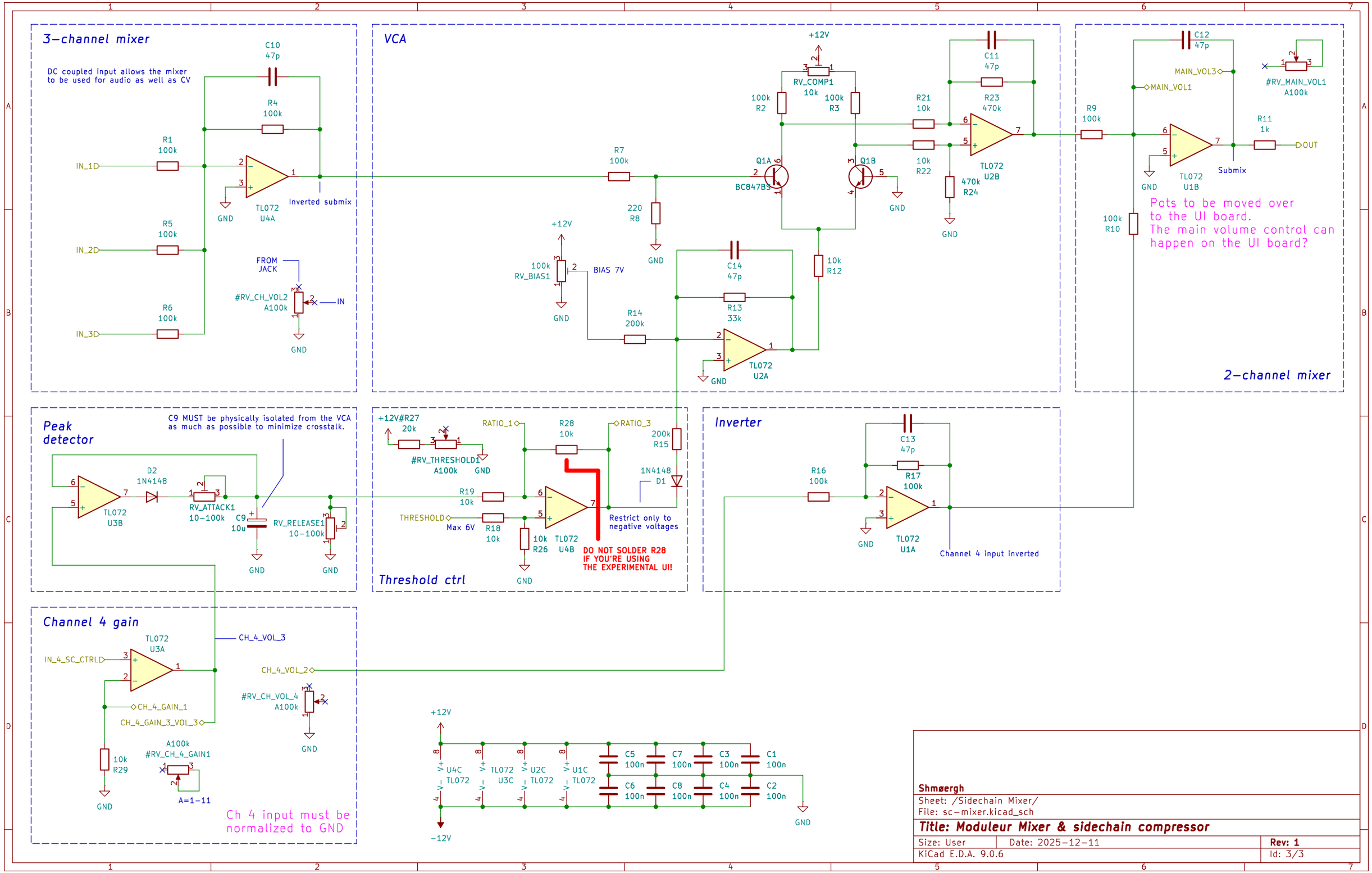


Shmøergh

Sheet: /Sidechain Mixer/

File: sc-mixer.kicad_sch

**Title: Moduleur Mixer & sidechain compressor**

| | | |
|---|---|---|
| Size: User | Date: 2025-12-11 | Rev: 1 |
| KiCad E.D.A. 9.0.6 | | Id: 3/3 |

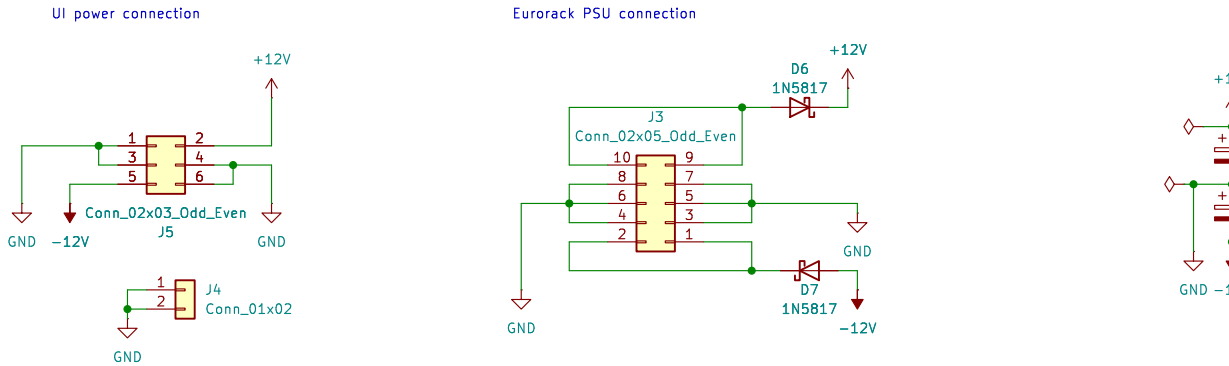


**Shmøergh**

Sheet: /Power/
File: power.kicad_sch

***Title: Moduleur Mixer & sidechain compressor***

| | | |
|---|---|---|
| Size: A4 | Date: 2025-12-11 | **Rev: 1** |
| KiCad E.D.A. 9.0.6 | | Id: 4/3 |