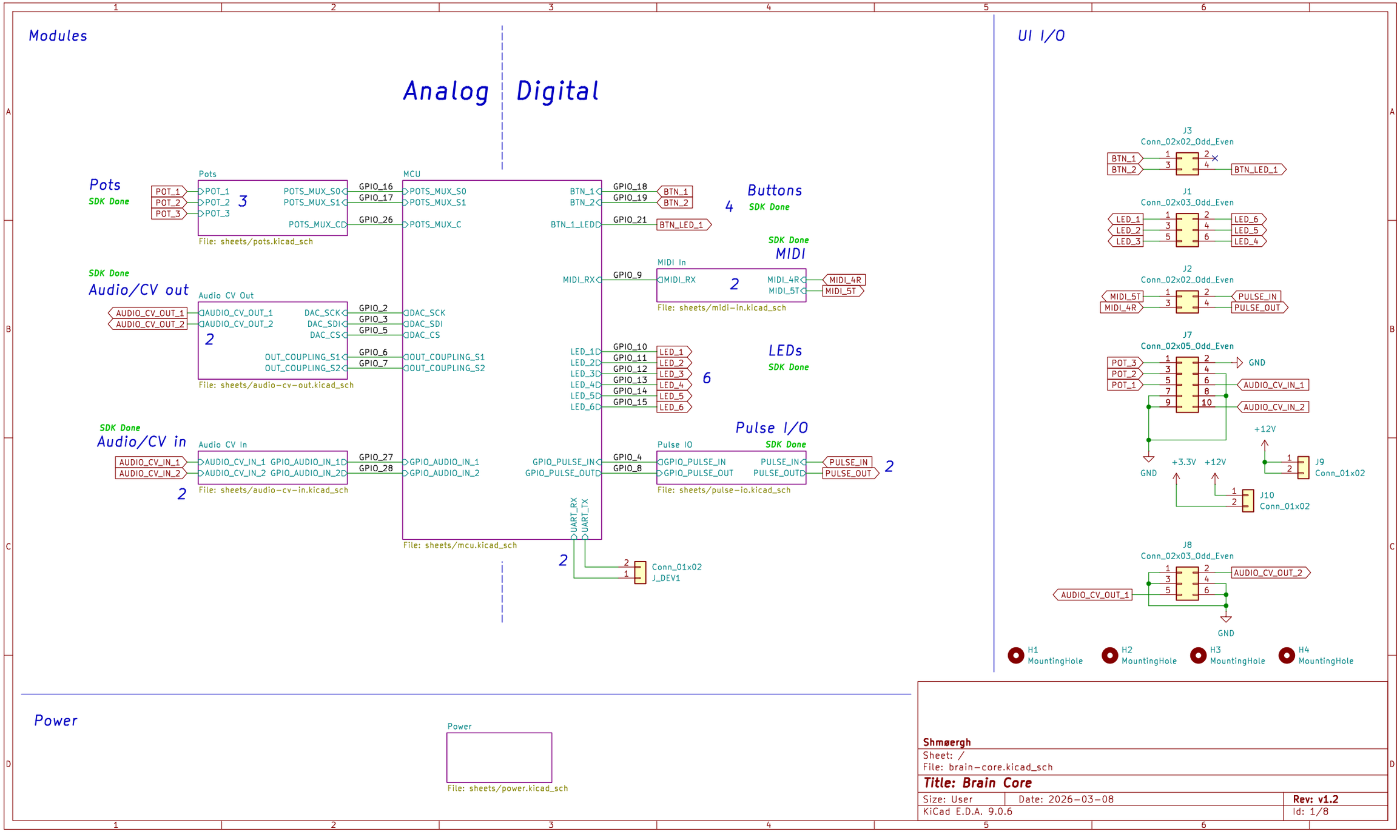
Modules
Analog
Digital
Pots
SDK Done
Pots
POT_1
POT_2
POT_3
POTS_MUX_S0
POTS_MUX_S1
POTS_MUX_C
3
File: sheets/pots.kicad_sch
GPIO_16
GPIO_17
GPIO_26
MCU
POTS_MUX_S0
POTS_MUX_S1
POTS_MUX_C
Buttons
SDK Done
BTN_1
BTN_2
BTN_1_LED
GPIO_18
GPIO_19
GPIO_21
BTN_LED_1
4
SDK Done
Audio/CV out
Audio CV Out
AUDIO_CV_OUT_1
AUDIO_CV_OUT_2
DAC_SCK
DAC_SDI
DAC_CS
OUT_COUPLING_S1
OUT_COUPLING_S2
2
File: sheets/audio-cv-out.kicad_sch
GPIO_2
GPIO_3
GPIO_5
GPIO_6
GPIO_7
SDK Done
MIDI
MIDI In
MIDI_RX
MIDI_4R
MIDI_5T
2
File: sheets/midi-in.kicad_sch
GPIO_9
LEDs
SDK Done
LED_1
LED_2
LED_3
LED_4
LED_5
LED_6
GPIO_10
GPIO_11
GPIO_12
GPIO_13
GPIO_14
GPIO_15
6
SDK Done
Audio/CV in
Audio CV In
AUDIO_CV_IN_1
AUDIO_CV_IN_2
GPIO_AUDIO_IN_1
GPIO_AUDIO_IN_2
2
File: sheets/audio-cv-in.kicad_sch
GPIO_27
GPIO_28
Pulse I/O
SDK Done
Pulse IO
GPIO_PULSE_IN
GPIO_PULSE_OUT
PULSE_IN
PULSE_OUT
GPIO_4
GPIO_8
2
File: sheets/pulse-io.kicad_sch
UART_RX
UART_TX
File: sheets/mcu.kicad_sch
2
Conn_01x02
J_DEV1
UI I/O
J3
Conn_02x02_Odd_Even
BTN_1
BTN_2
BTN_LED_1
J1
Conn_02x03_Odd_Even
LED_1
LED_2
LED_3
LED_6
LED_5
LED_4
J2
Conn_02x02_Odd_Even
MIDI_5T
MIDI_4R
PULSE_IN
PULSE_OUT
J7
Conn_02x05_Odd_Even
POT_3
POT_2
POT_1
GND
AUDIO_CV_IN_1
AUDIO_CV_IN_2
+12V
+3.3V
J9
Conn_01x02
J10
Conn_01x02
J8
Conn_02x03_Odd_Even
AUDIO_CV_OUT_2
AUDIO_CV_OUT_1
H1
MountingHole
H2
MountingHole
H3
MountingHole
H4
MountingHole
Power
Power
File: sheets/power.kicad_sch
Shmøergh
Sheet: /
File: brain-core.kicad_sch
Title: Brain Core
Size: User
Date: 2026-03-08
Rev: v1.2
KiCad E.D.A. 9.0.6
Id: 1/8

UI power connection

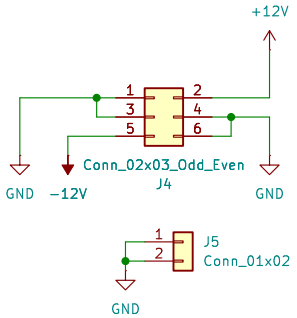

Eurorack PSU connection

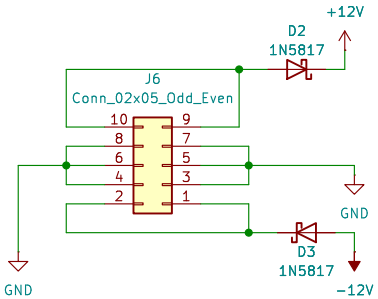

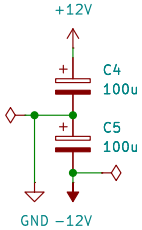

When flashing programs to MCU, this jumper MUST BE disconnected. The MCU should receive its power from the SWD device (another RPi Pico, Picoprobe).

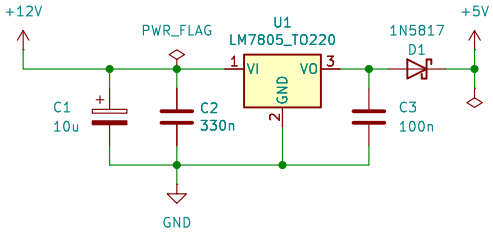

Shmøergh

Sheet: /Power/
File: power.kicad_sch

Title: Brain Core

Size: A4	Date: 2026-03-08	**Rev: v1.2**
KiCad E.D.A. 9.0.6		Id: 4/8

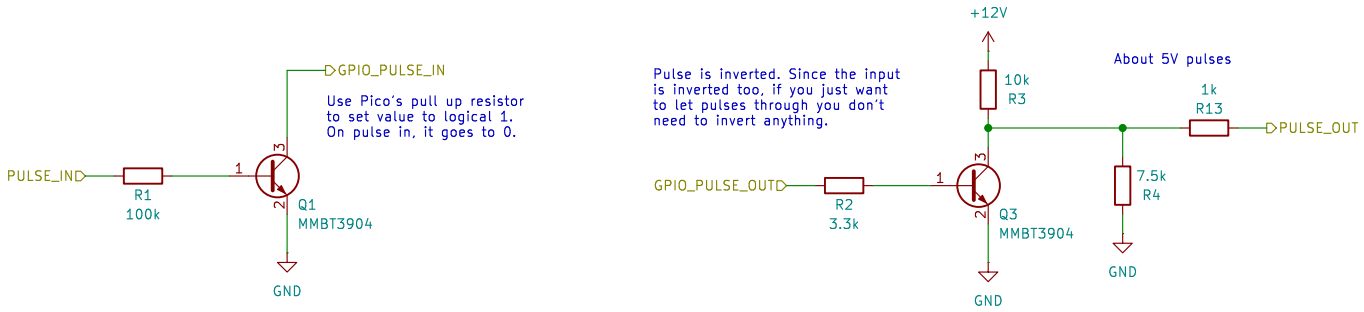

Shmøergh

Sheet: /Pulse IO/
File: pulse-io.kicad_sch

Title: Brain Core

Size: A4	Date: 2026-03-08	**Rev: v1.2**
KiCad E.D.A. 9.0.6		Id: 5/8

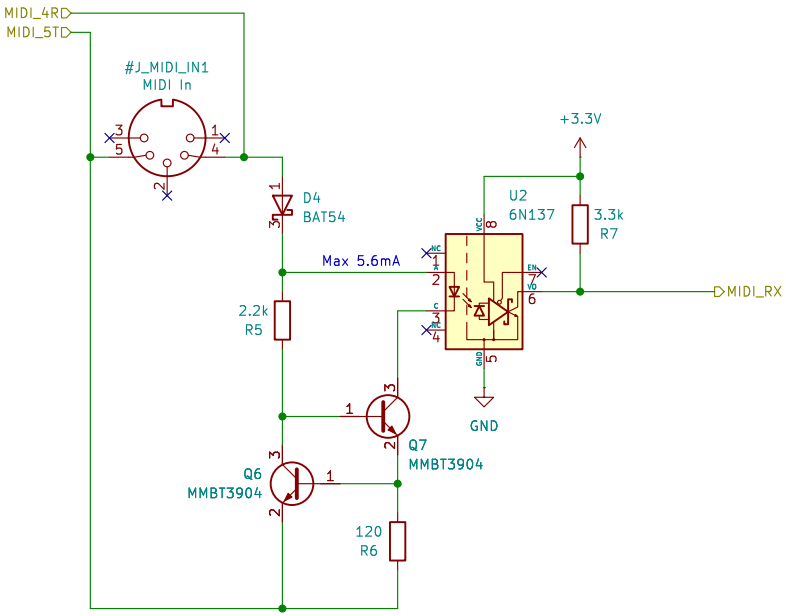

Circuit protection to limit max current around 5.6mA for the LED

Shmøergh

Sheet: /MIDI In/
File: midi-in.kicad_sch

Title: Brain Core

Size: A4	Date: 2026-03-08	**Rev: v1.2**
KiCad E.D.A. 9.0.6		Id: 6/8

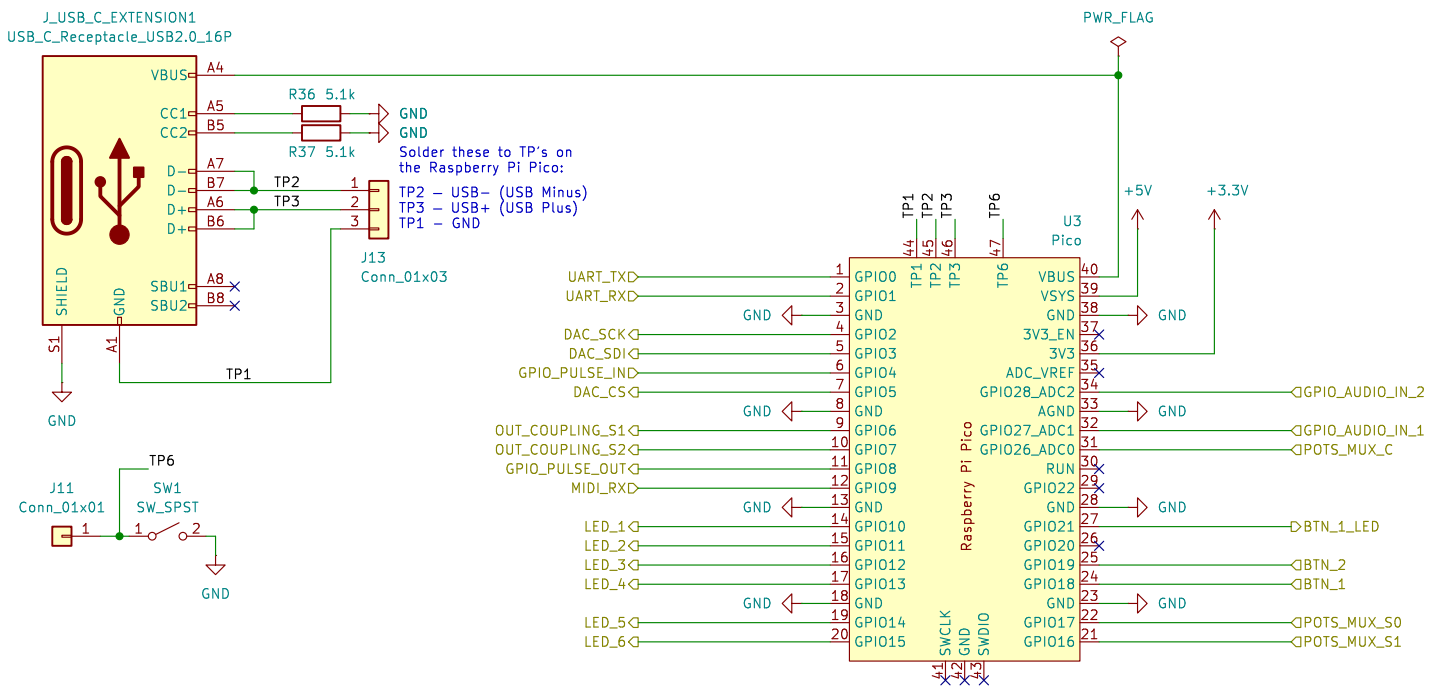

Shmøergh

Sheet: /MCU/
File: mcu.kicad_sch

Title: Brain Core

Size: A4	Date: 2026-03-08	**Rev: v1.2**
KiCad E.D.A. 9.0.6		Id: 7/8

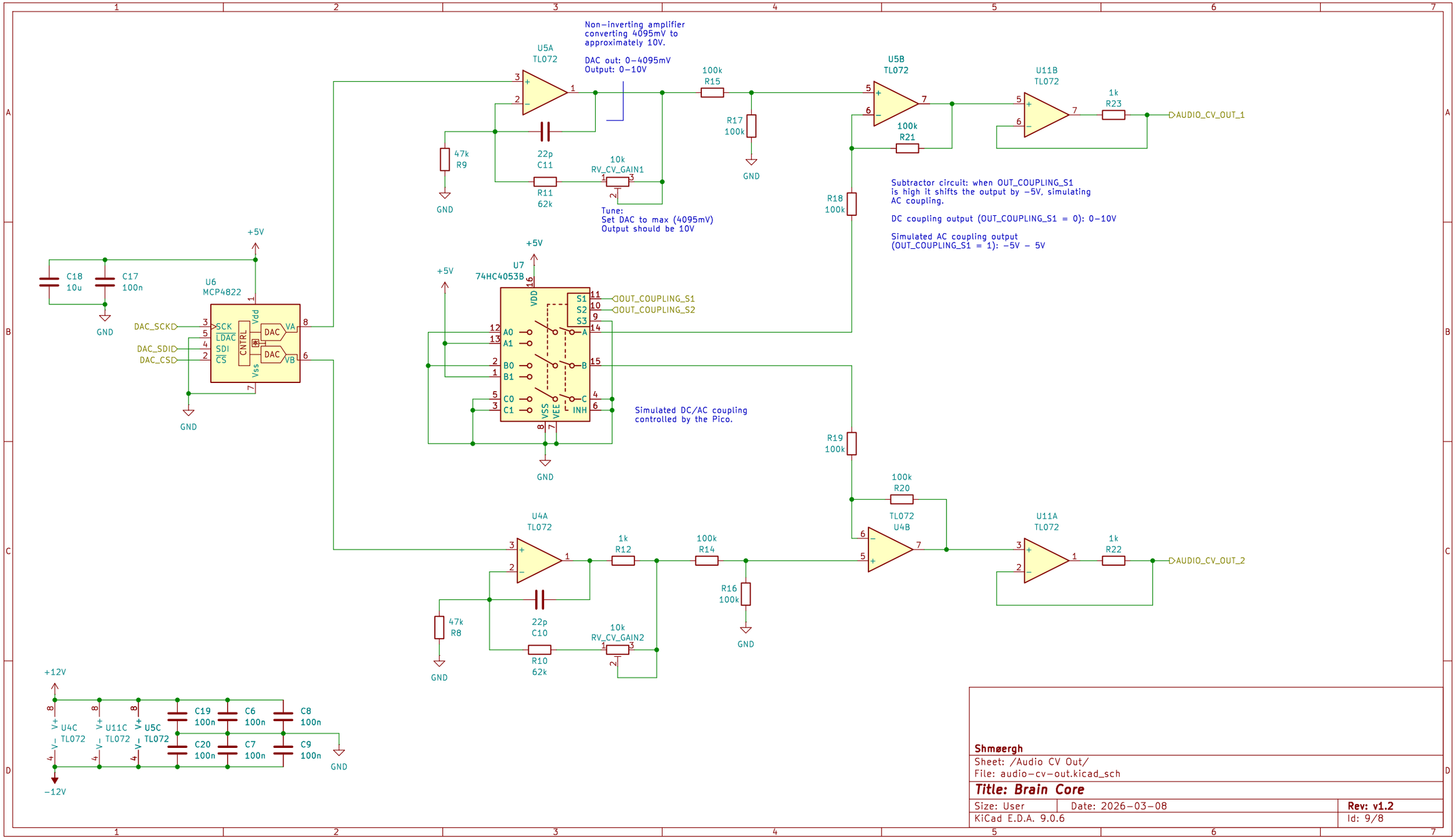

Shmøergh

Sheet: /Audio CV Out/

File: audio-cv-out.kicad_sch

Title: Brain Core

Size: User	Date: 2026-03-08	**Rev: v1.2**
KiCad E.D.A. 9.0.6		Id: 9/8

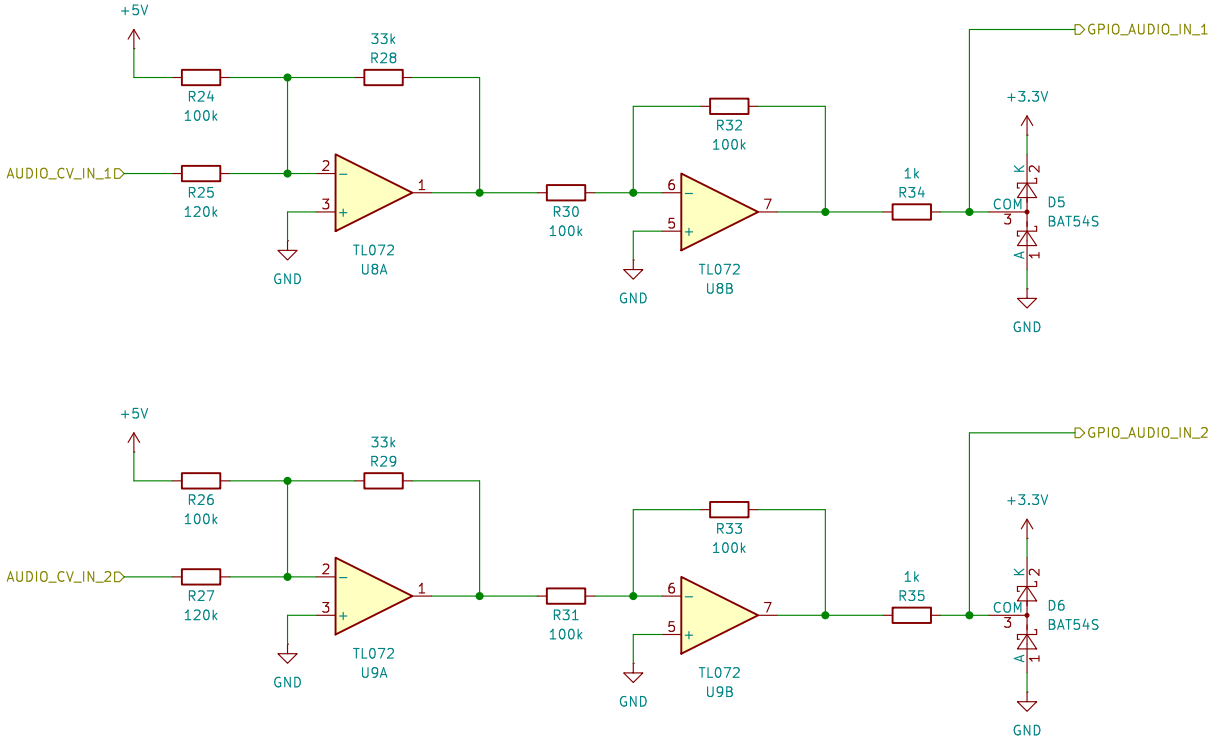

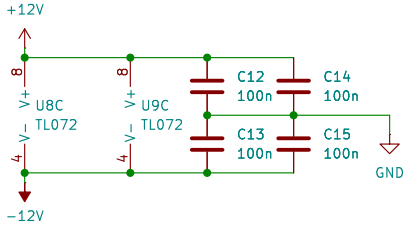

Shmøergh

Sheet: /Audio CV In/
File: audio-cv-in.kicad_sch

Title: Brain Core

Size: A4	Date: 2026-03-08	**Rev: v1.2**
KiCad E.D.A. 9.0.6		Id: 9/8

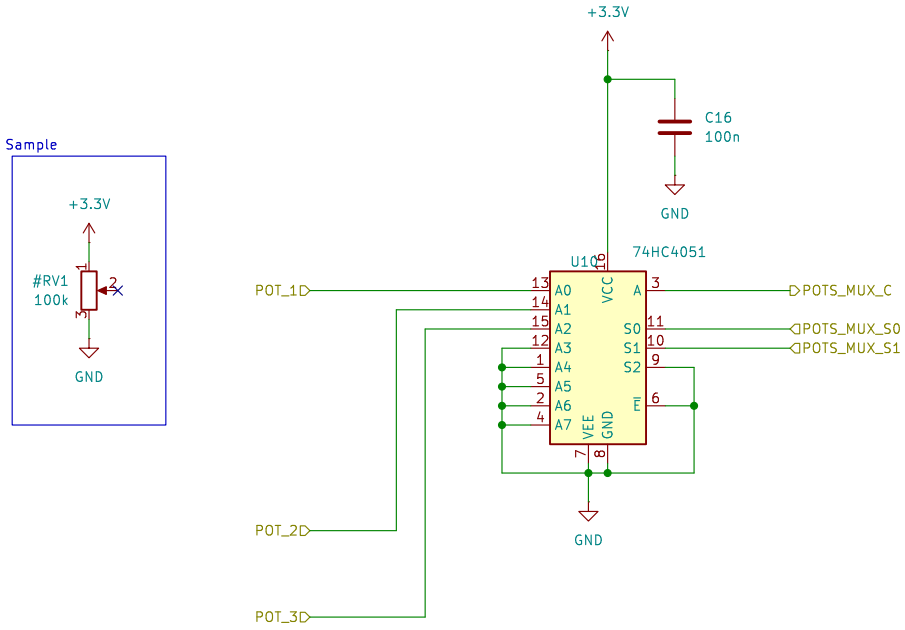

Shmøergh

Sheet: /Pots/
File: pots.kicad_sch

Title: Brain Core

Size: A4	Date: 2026-03-08	**Rev: v1.2**
KiCad E.D.A. 9.0.6		Id: 10/8