Modules

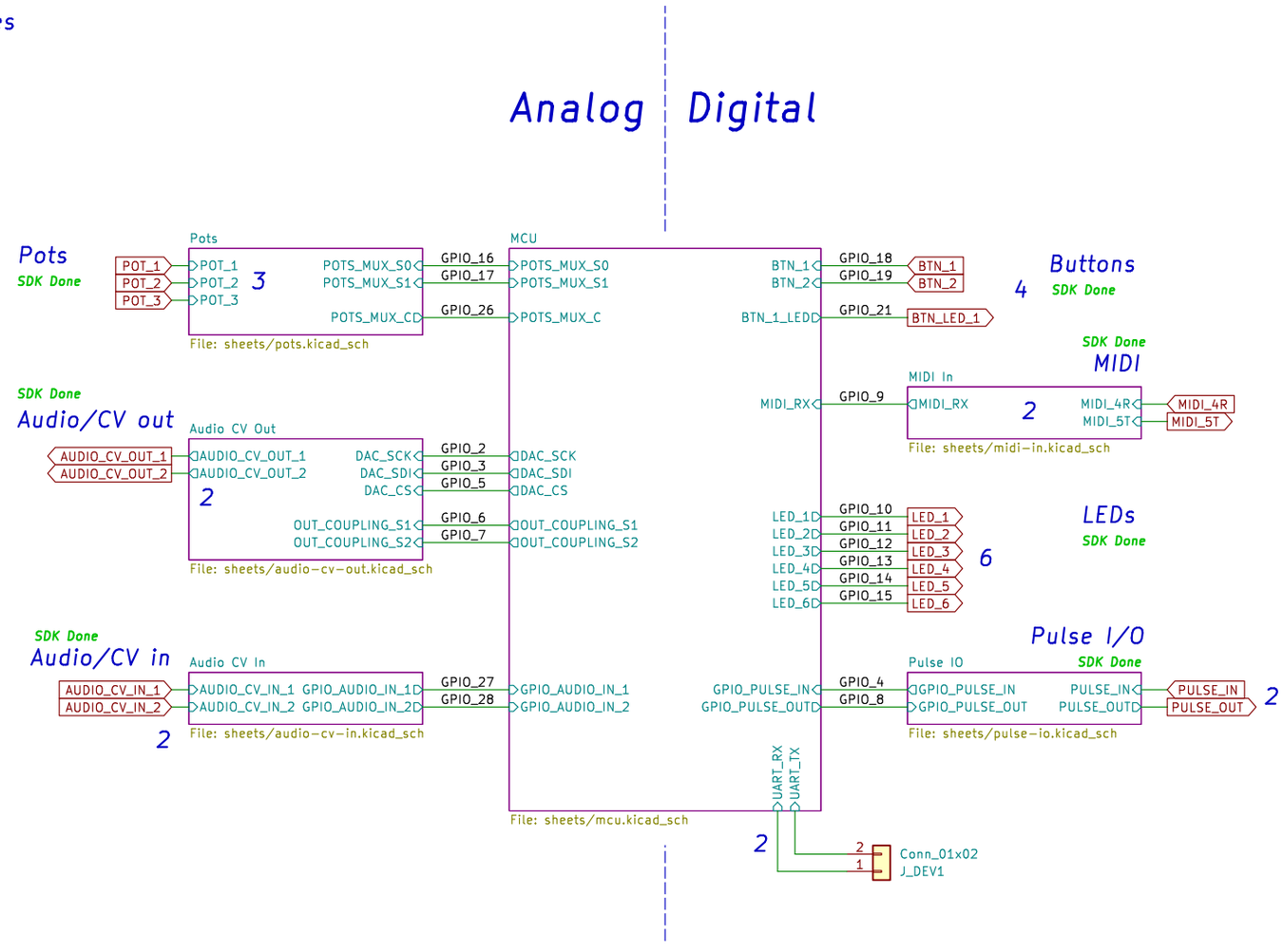

UI I/O

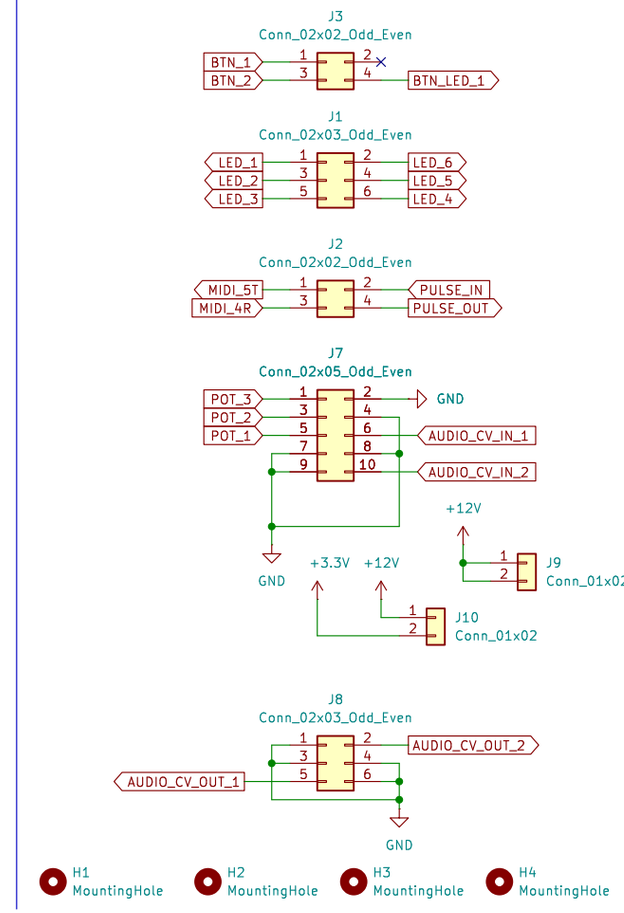

Power

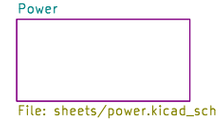

Shmøergh

Sheet: /

File: brain-core.kicad_sch

Title: Brain Core

Size: User	Date: 2026-03-08	**Rev: 3**
KiCad E.D.A. 9.0.6		Id: 1/8

UI power connection

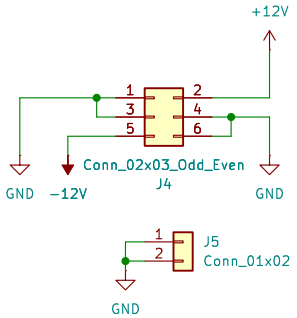

Eurorack PSU connection

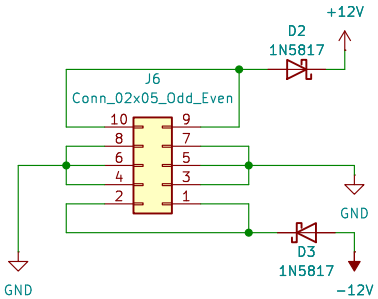

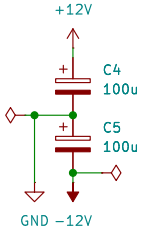

When flashing programs to MCU, this jumper MUST BE disconnected. The MCU should receive its power from the SWD device (another RPi Pico, Picoprobe).

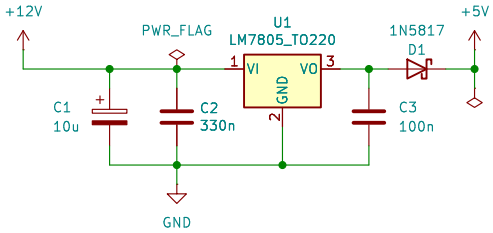

Shmøergh

Sheet: /Power/
File: power.kicad_sch

Title: Brain Core

Size: A4	Date: 2026-03-08	**Rev: 3**
KiCad E.D.A. 9.0.6		Id: 4/8

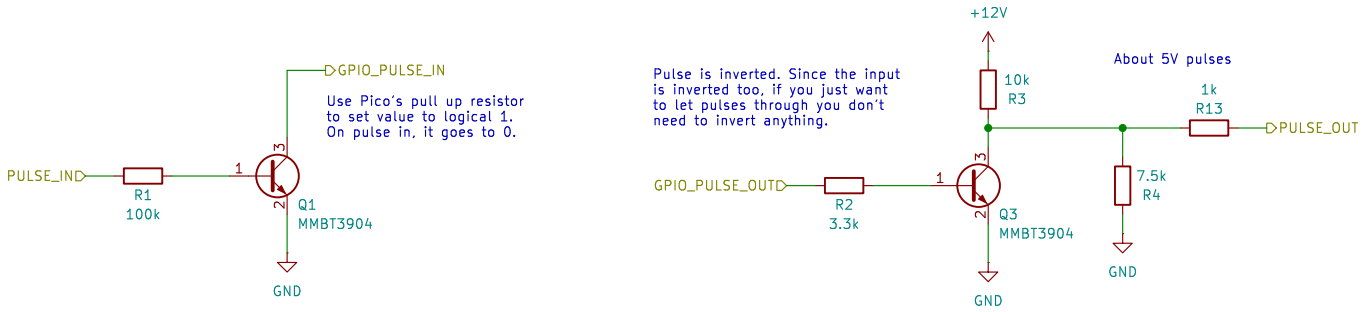

Shmøergh

Sheet: /Pulse IO/
File: pulse-io.kicad_sch

Title: Brain Core

Size: A4	Date: 2026-03-08	**Rev: 3**
KiCad E.D.A. 9.0.6		Id: 5/8

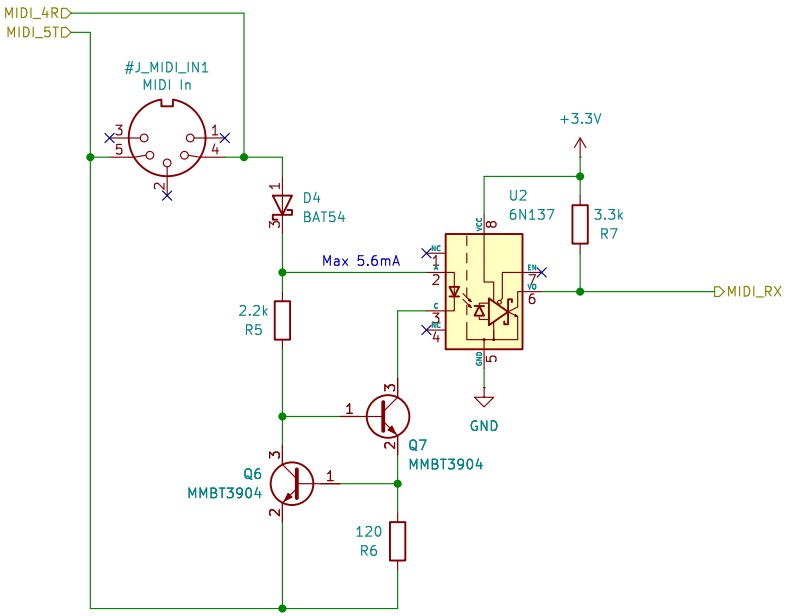

Circuit protection to limit max current around 5.6mA for the LED

Shmøergh

Sheet: /MIDI In/
File: midi-in.kicad_sch

Title: Brain Core

Size: A4	Date: 2026-03-08	**Rev: 3**
KiCad E.D.A. 9.0.6		Id: 6/8

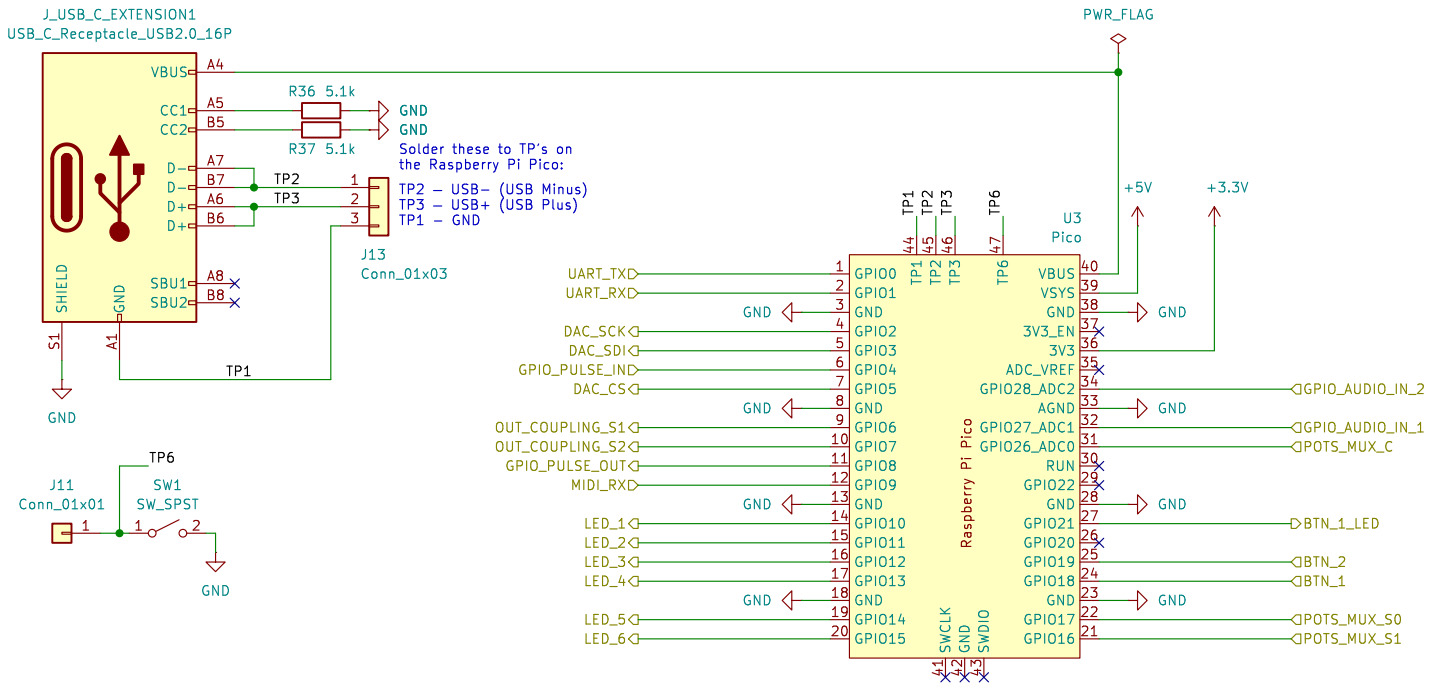

Shmøergh

Sheet: /MCU/
File: mcu.kicad_sch

Title: Brain Core

Size: A4	Date: 2026-03-08	**Rev: 3**
KiCad E.D.A. 9.0.6		Id: 7/8

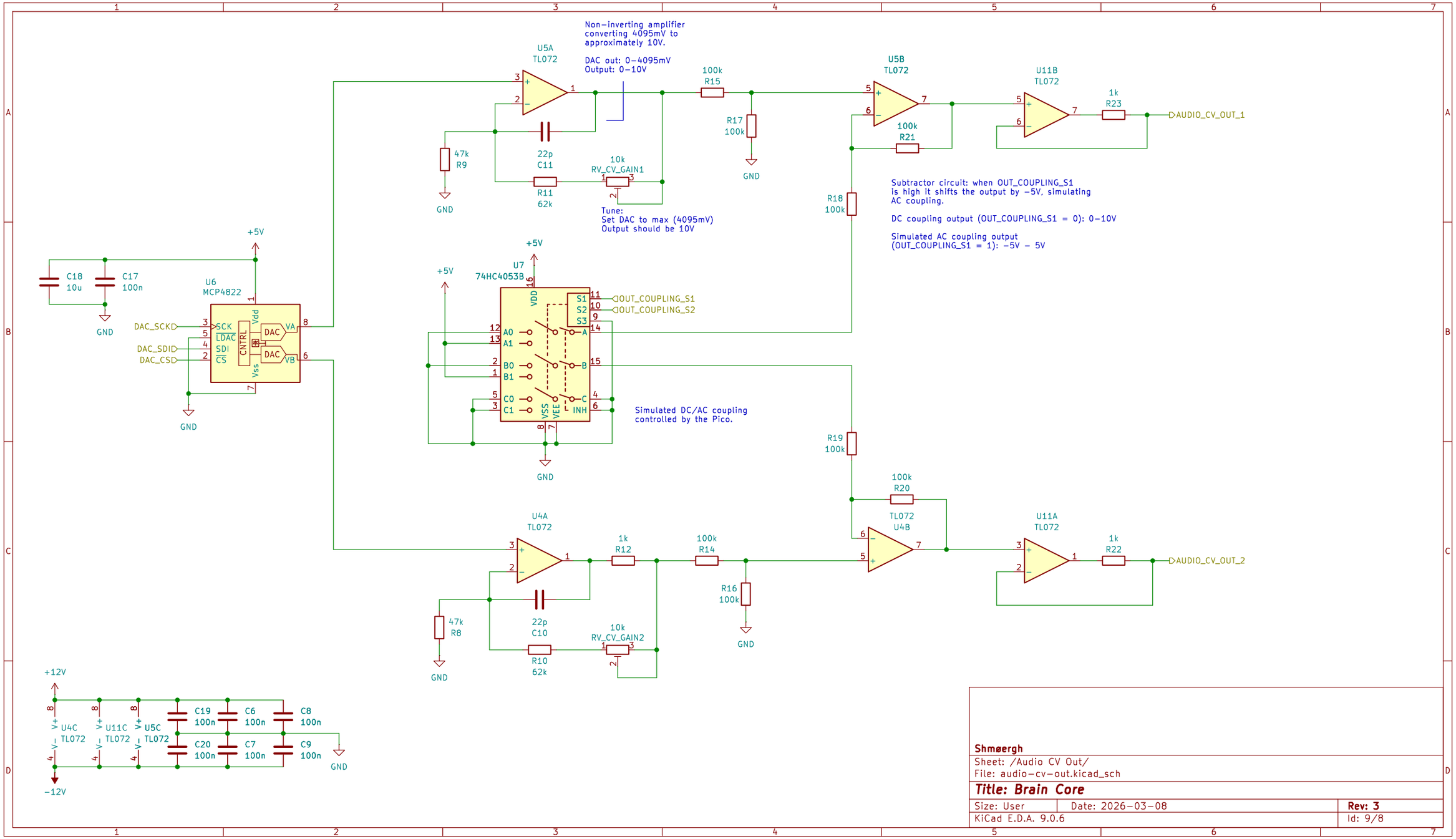

Shmøergh

Sheet: /Audio CV Out/

File: audio-cv-out.kicad_sch

Title: Brain Core

Size: User	Date: 2026-03-08	**Rev: 3**
KiCad E.D.A. 9.0.6		Id: 9/8

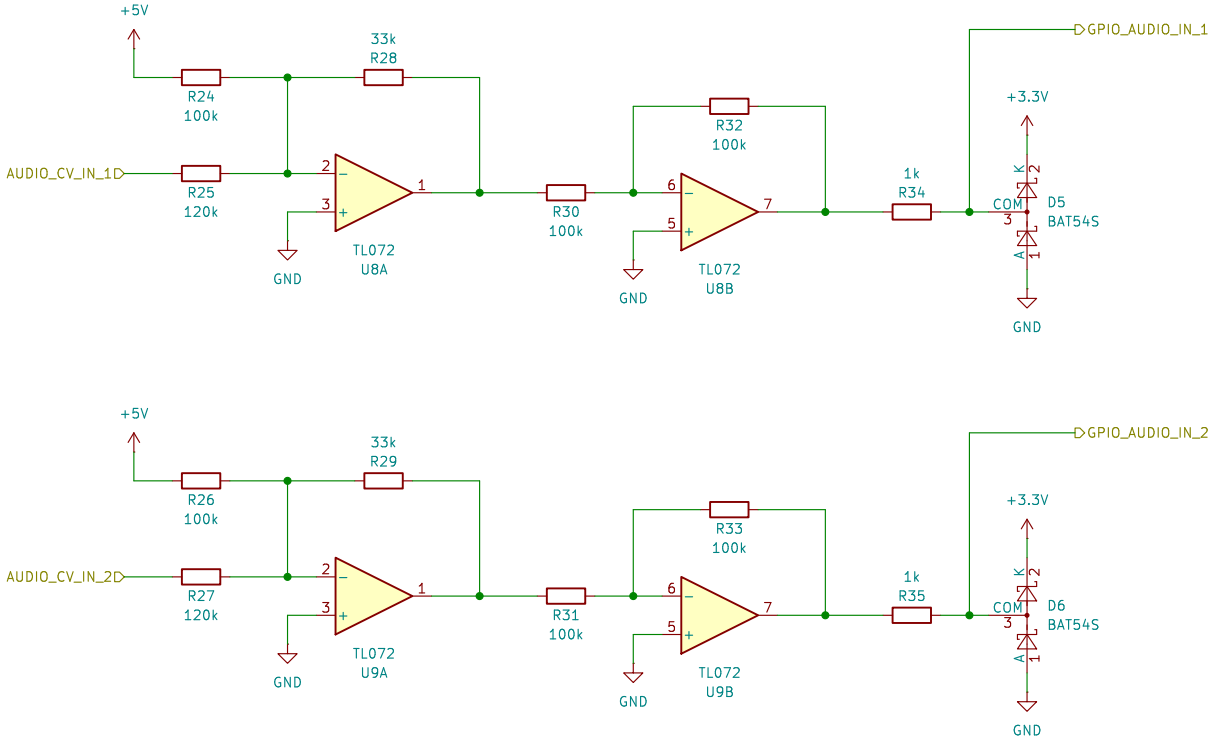

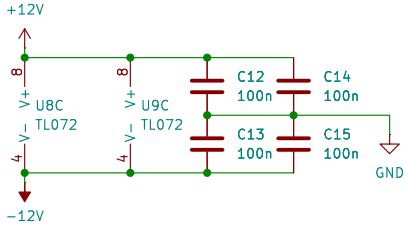

Shmøergh

Sheet: /Audio CV In/
File: audio-cv-in.kicad_sch

Title: Brain Core

Size: A4	Date: 2026-03-08	**Rev: 3**
KiCad E.D.A. 9.0.6		Id: 9/8

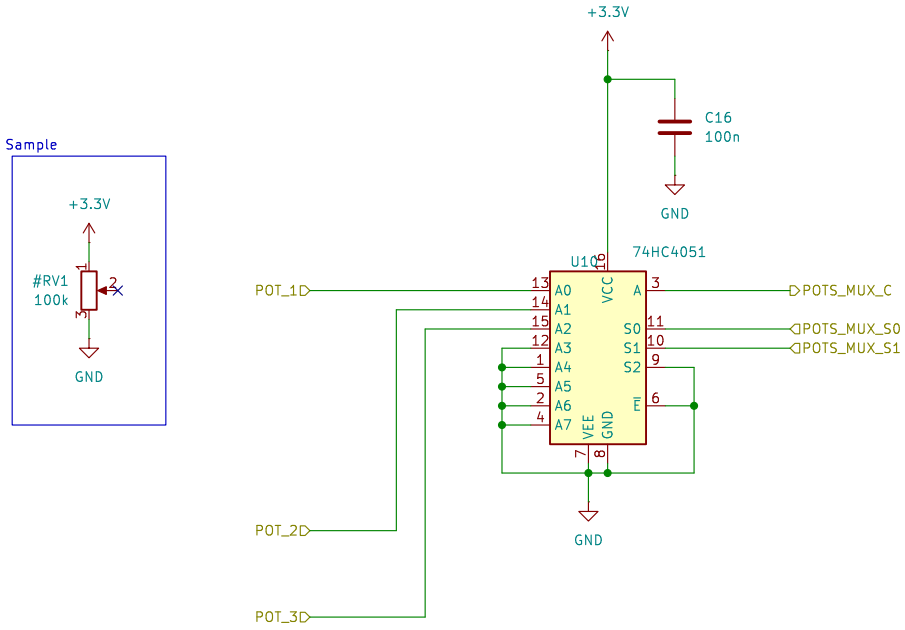

Shmøergh

Sheet: /Pots/
File: pots.kicad_sch

Title: Brain Core

Size: A4	Date: 2026-03-08	**Rev: 3**
KiCad E.D.A. 9.0.6		Id: 10/8