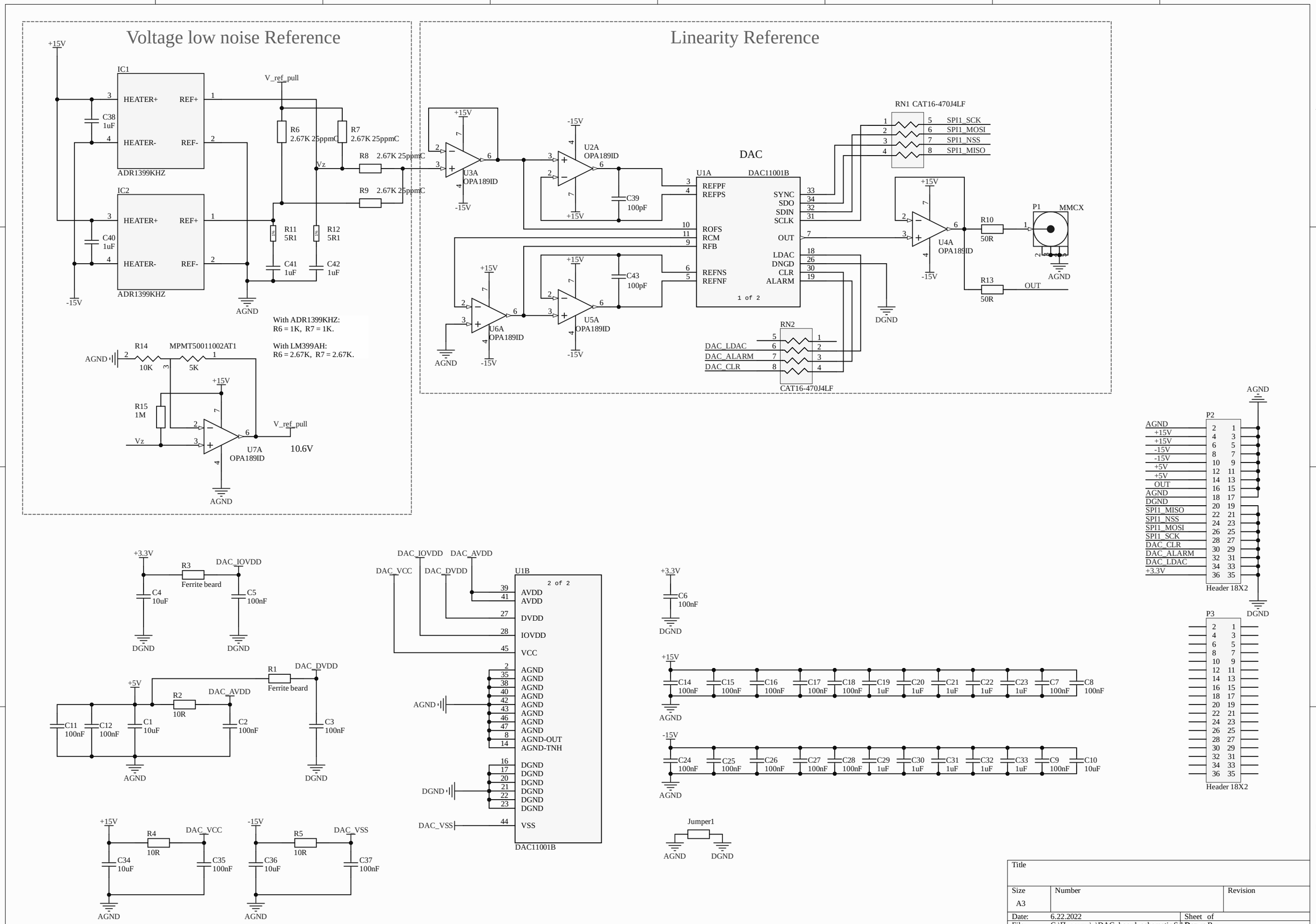
Voltage low noise Reference
Linearity Reference
IC1
HEATER+
REF+
HEATER-
REF-
ADR1399KHZ
IC2
C38 1uF
C40 1uF
C41 1uF
C42 1uF
R11 5R1
R12 5R1
R6 2.67K 25ppmC
R7 2.67K 25ppmC
R8 2.67K 25ppmC
R9 2.67K 25ppmC
V_ref_pull
Vz
+15V
-15V
AGND
With ADR1399KHZ:
R6 = 1K, R7 = 1K.
With LM399AH:
R6 = 2.67K, R7 = 2.67K.
R14 10K
MPMT50011002AT1
5K
R15 1M
U7A OPA189ID
10.6V
U3A OPA189ID
U2A OPA189ID
U6A OPA189ID
U5A OPA189ID
U4A OPA189ID
C39 100pF
C43 100pF
DAC
U1A
DAC11001B
REFPF
REFPS
ROFS
RCM
RFB
REFNS
REFNF
SYNC
SDO
SDIN
SCLK
OUT
LDAC
DNGD
CLR
ALARM
1 of 2
RN1 CAT16-470J4LF
SPI1_SCK
SPI1_MOSI
SPI1_NSS
SPI1_MISO
RN2
DAC_LDAC
DAC_ALARM
DAC_CLR
CAT16-470J4LF
R10 50R
R13 50R
P1 MMCX
DGND
P2
Header 18X2
P3
AGND
DGND
OUT
+3.3V
R3 Ferrite beard
DAC_IOVDD
C4 10uF
C5 100nF
R1 Ferrite beard
DAC_DVDD
+5V
R2 10R
DAC_AVDD
C11 100nF
C12 100nF
C1 10uF
C2 100nF
C3 100nF
DAC_VCC
DAC_DVDD
DAC_AVDD
U1B
2 of 2
AVDD
DVDD
IOVDD
VCC
AGND-OUT
AGND-TNH
DGND
VSS
DAC_VSS
DAC11001B
C6 100nF
C14 100nF
C15 100nF
C16 100nF
C17 100nF
C18 100nF
C19 1uF
C20 1uF
C21 1uF
C22 1uF
C23 1uF
C7 100nF
C8 100nF
C24 100nF
C25 100nF
C26 100nF
C27 100nF
C28 100nF
C29 1uF
C30 1uF
C31 1uF
C32 1uF
C33 1uF
C9 100nF
C10 10uF
Jumper1
R4 10R
C34 10uF
C35 100nF
R5 10R
C36 10uF
C37 100nF
Title
Size
A3
Number
Revision
Date: 6.22.2022
Sheet of
File: C:\Проекты\..\DAC_board_schematic.SchDoc
Drawn By: