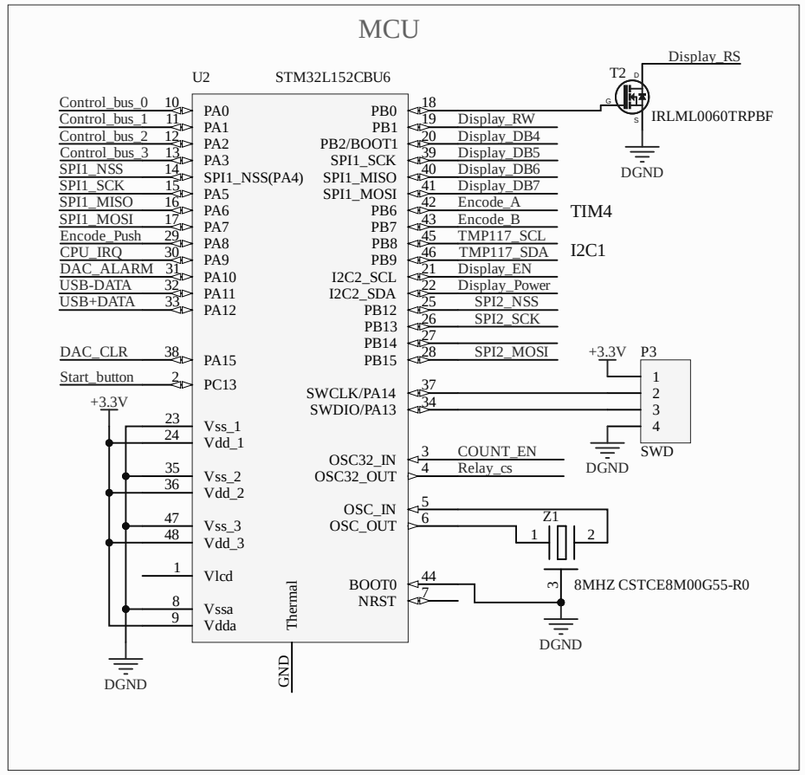

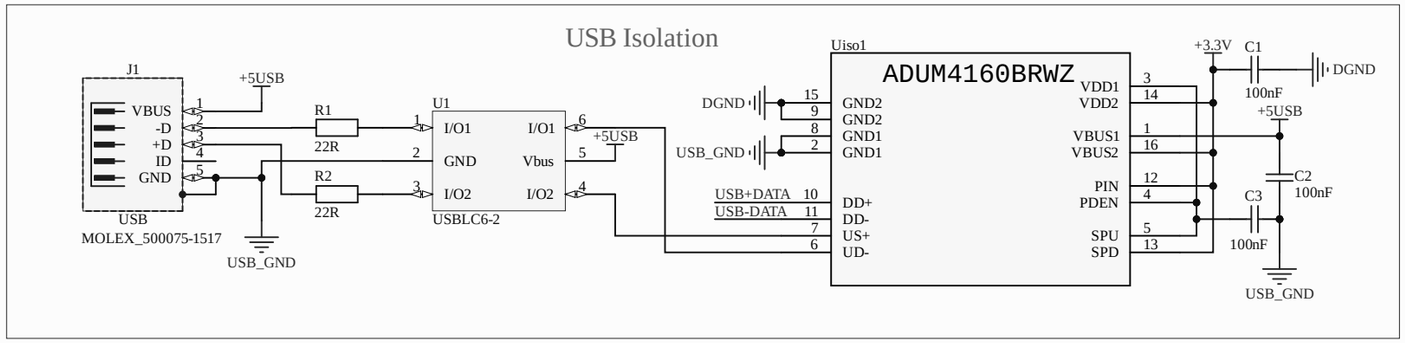

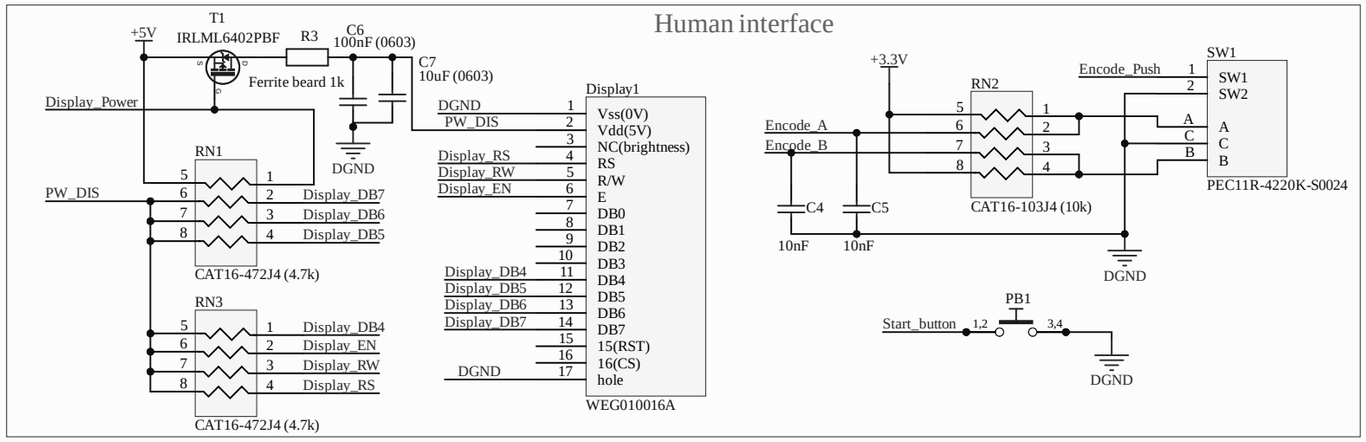

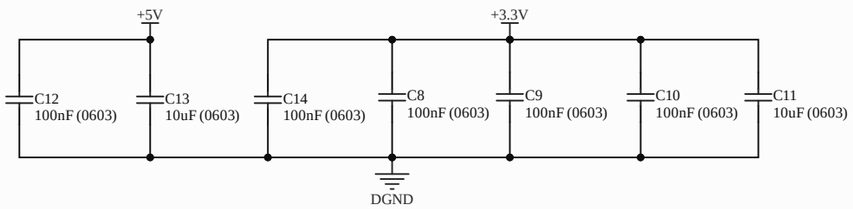

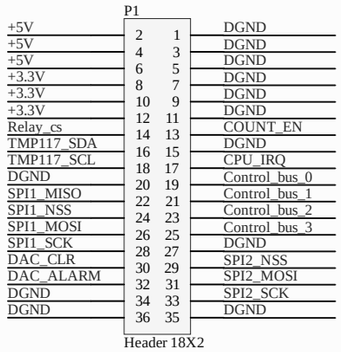

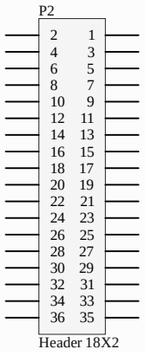

Title		
Size A3	Number	Revision
Date: 6.22.2022	Sheet of	
File: C:\Проекты\..\Digital_board_schematic.SchDoc	Drawn By:	