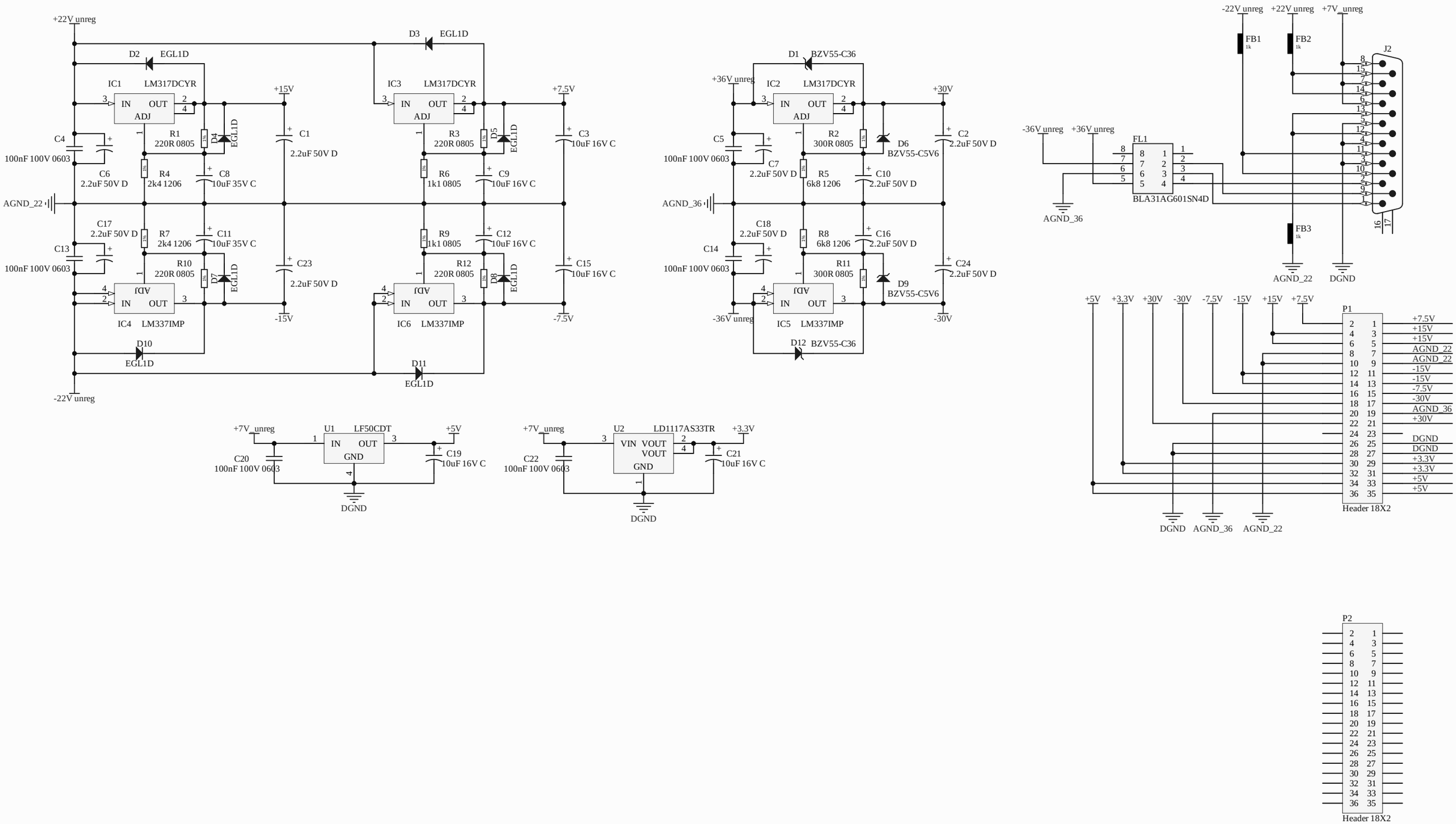

Title		
Size A3	Number	Revision
Date: 6.22.2022		Sheet of
File: C:\Проекты\..\Internal_Power_schematic.SchDoc		Drawn By: