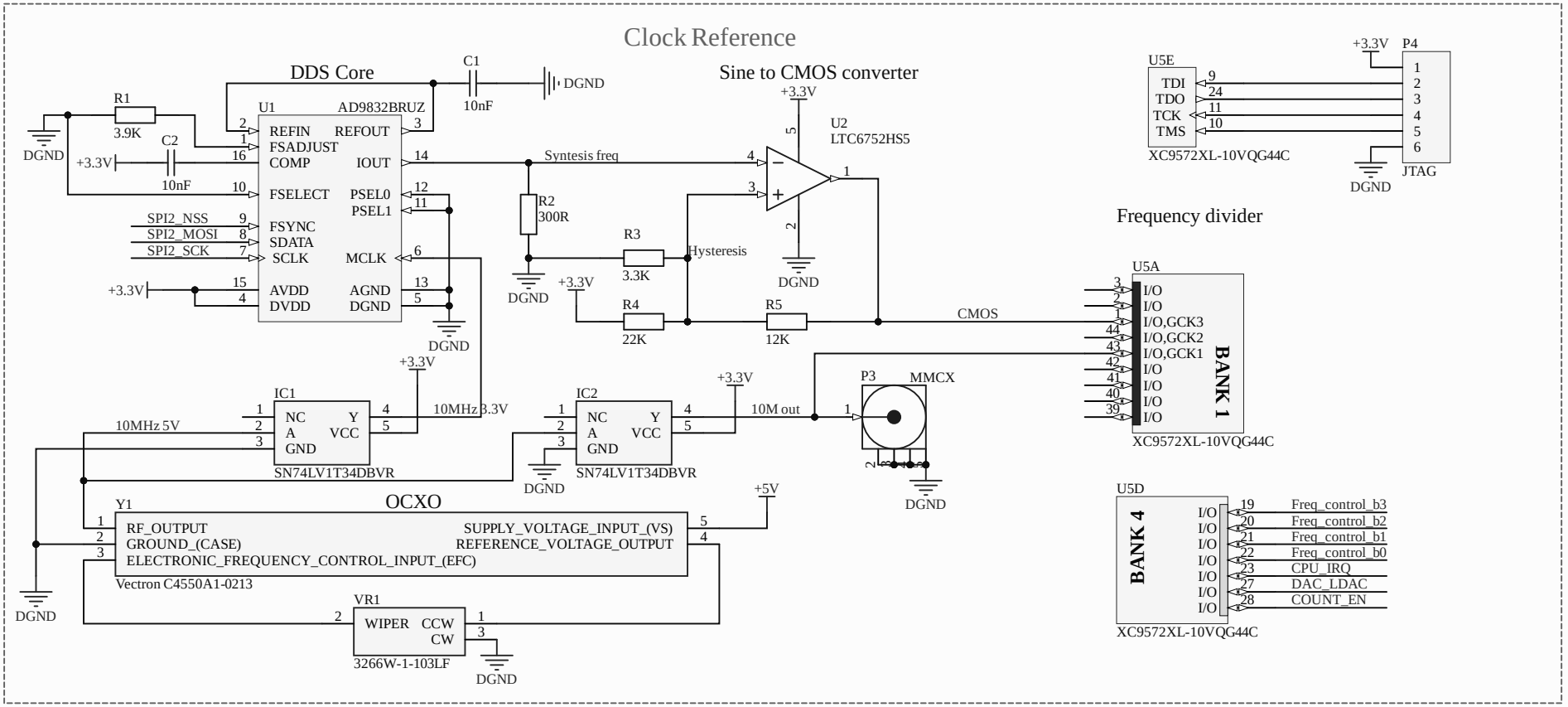
Clock Reference
DDS Core
U1
AD9832BRUZ
REFIN
REFOUT
FSADJUST
COMP
IOUT
FSELECT
PSEL0
PSEL1
FSYNC
SDATA
SCLK
MCLK
AVDD
DVDD
AGND
DGND
SPI2_NSS
SPI2_MOSI
SPI2_SCK
R1
3.9K
C2
10nF
C1
10nF
+3.3V
DGND
Syntesis freq
R2
300R
R3
3.3K
R4
22K
R5
12K
Hysteresis
Sine to CMOS converter
U2
LTC6752HS5
CMOS
U5E
TDI
TDO
TCK
TMS
XC9572XL-10VQG44C
P4
JTAG
Frequency divider
U5A
BANK 1
I/O
I/O,GCK3
I/O,GCK2
I/O,GCK1
XC9572XL-10VQG44C
IC1
NC
A
GND
Y
VCC
SN74LV1T34DBVR
10MHz 5V
10MHz 3.3V
IC2
10M out
P3
MMCX
Y1
OCXO
RF_OUTPUT
GROUND_(CASE)
ELECTRONIC_FREQUENCY_CONTROL_INPUT_(EFC)
SUPPLY_VOLTAGE_INPUT_(VS)
REFERENCE_VOLTAGE_OUTPUT
Vectron C4550A1-0213
+5V
VR1
WIPER
CCW
CW
3266W-1-103LF
U5D
BANK 4
Freq_control_b3
Freq_control_b2
Freq_control_b1
Freq_control_b0
CPU_IRQ
DAC_LDAC
COUNT_EN

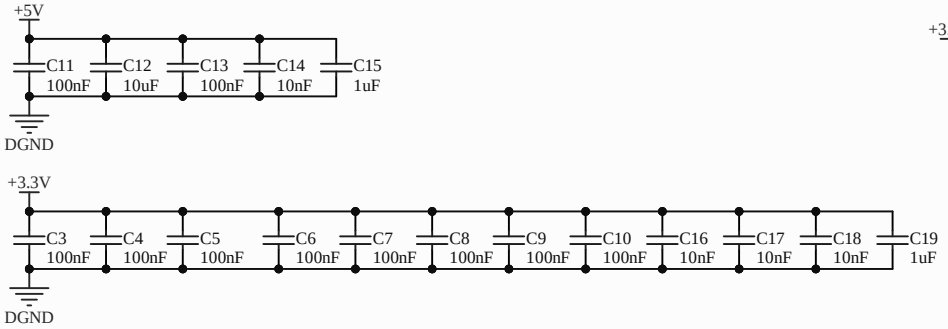
+5V
C11 100nF
C12 10uF
C13 100nF
C14 10nF
C15 1uF
DGND
+3.3V
C3 100nF
C4 100nF
C5 100nF
C6 100nF
C7 100nF
C8 100nF
C9 100nF
C10 100nF
C16 10nF
C17 10nF
C18 10nF
C19 1uF

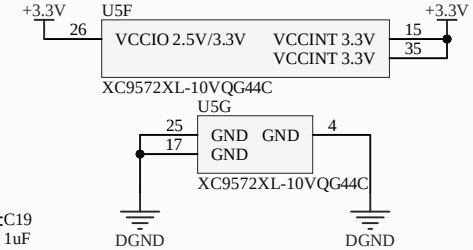
+3.3V
U5F
VCCIO 2.5V/3.3V
VCCINT 3.3V
VCCINT 3.3V
XC9572XL-10VQG44C
U5G
GND
GND
XC9572XL-10VQG44C
DGND

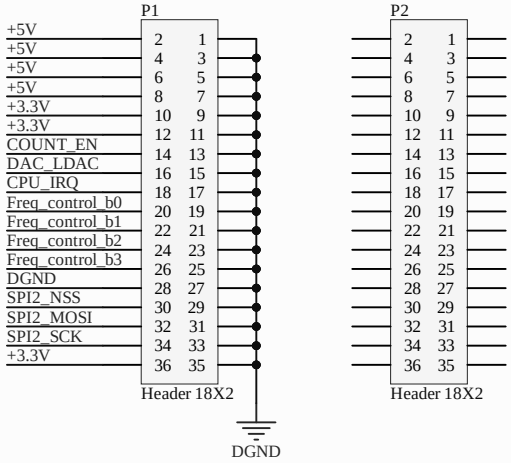
P1
+5V
+5V
+5V
+5V
+3.3V
+3.3V
COUNT_EN
DAC_LDAC
CPU_IRQ
Freq_control_b0
Freq_control_b1
Freq_control_b2
Freq_control_b3
DGND
SPI2_NSS
SPI2_MOSI
SPI2_SCK
+3.3V
Header 18X2
P2
Header 18X2
DGND