TAE 313 – FARM POWER AND MAINTENANCE I – TEST

TIME ALLOWED: 30 mins

INSTRUCTIONS: Answer All Questions

1. On what basis are the following tractors classified?
   i. Crawler tractors
   ii. Standard row crop tractors
   iii. High clearance tractors
   iv. Universal tractor

   Steering methods, arrangement of frames and traction numbers.

2. Name the three ways implements are generally attached to and operated by tractors. Trailed, ~~rear~~ Semi mounted, fully mounted.
3. State the five ways implements can be classified based on tillage operations.
4. According to the type of the working parts, how are cultivators classified?
   Shovel cultivators, Disc cultivators, Surface cultivators.
5. State the three commonly used dynamometers.
6. What are the three available types of strain gauges?
7. State the formula for calculating the horse power develop by a power unit in pulling Agricultural implements. $HP = \frac{\text{max} \times \text{Drawbar pull} \times \text{Speed}}{75}$
8. What are the three basic forces acting on a tractor at rest without a load?
9. Explain why two tractors operating the same types of implements could have different weight transfer
10. What are the three main forces or force systems acting on a tillage implement moving at a constant speed?
11. State the two basic types of soil failure pattern.

Lecturer : Prof. E. A. Ajav

Scanned by CamScanner

UNIVERSITY OF IBADAN
FACULTY OF TECHNOLOGY
DEPARTMENT OF MECHANICAL ENGINEERING
BACHELOR OF SCIENCE DEGREE EXAMINATION
2016/2017 SESSION
SEMESTER TEST I

Course No.: TME 313 **Course Title:** Material Science **Date:** Tuesday, 18th April, 2017
Hours: 50 minutes **Time:** 10:00 am - 10:50 am **INSTRUCTIONS:** Answer all the questions

Question 1

(a) Give a comprehensive definitions of the following:
(i) Material Science (ii) Material Engineering (iii) Biomaterials (iv) Nanomaterials

(b) Considering the geometry and the position of atoms in **SC**, **FCC** and **BCC** crystal structures, obtain the value of the lattice parameter 'a' for **SC**, **FCC** and **BCC** in terms of the atomic radius **R**. Hence, calculate the Atomic Packing Factor for **SC**, **FCC** and **BCC** structures. [Provide a neat sketch of the unit cells]

(c) The atomic weight, density and atomic radius for three hypothetical alloys are given in table 1. For each, determine whether its crystal structure is FCC, BCC or Simple Cubic.

Table 1: Properties Data for Hypothetical Alloy materials

Alloy	Atomic Weight (g/mol)	Density (g/cm^3)	Atomic Radius (nm)
A	43.1	6.40	0.122
B	184.4	12.30	0.146
C	91.6	9.60	0.137

(d) In concise form, describe the applications of ***Piezoelectric Material*** in helicopters

(e) The crystal structure of titanium is HCP with a **c/a ratio of 1.58**. Given that its atomic radius and atomic weights are 1.48 Å and 47.867 g/mol respectively, Calculate its
(i) Atomic Packing Factor (ii) theoretical density

Question 2

(a) Define the following terms: *i. Coordinating number ii. Atomic Packing Factor ii. Linear density iii. Planar density iv. Polycrystalline materials v. Anisotropy vi. Polymorphism vii. Isotropy*

(b) Show that the steady-state form of Schrodinger's equation is given by:

$$\nabla^2\psi + 8\pi^2 m/h^2 (E-V)\psi = 0$$

(c) What is the wavelength of light emitted when the electron in a hydrogen atom undergoes a transition from energy level $n = 4$ to level $n = 2$?

(d) State Heisenberg Uncertainty principle and illustrate with equations.

(e) State Pauli's exclusive principle and use it to describe the four quantum numbers status of each of the outermost electrons in Oxygen atom.

(f) From basic electrostatic force of attraction and Bohr's quantum condition, show that the radii r of the stationary orbits is given as:

$$r = \frac{4\pi\varepsilon_0 n^2 \hbar^2}{mZe^2}$$

Scanned by CamScanner

UNIVERSITY OF IBADAN

FACULTY OF TECHNOLOGY

DEPARTMENT OF MECHANICAL ENGINEERING

BACHELOR OF SCIENCE DEGREE EXAMINATION

2013/2014 SESSION (FIRST SEMESTER)

Course No.: TME 313 Course Title: Material Science

Date: Friday, 26 September, 2014 Hours: 3 Time: 8:00 - 11:00 am

INSTRUCTIONS: Answer Four (4) Questions only. Question 1 is compulsory.

Useful Constants
Charge of electron, $e = 1.6 \times 10^{-19}\ C$, Mass of electron, $m_e = 9.11 \times 10^{-31}\ Kg$,
Mass of proton, $m_p = 1.672 \times 10^{-27}\ Kg$, Mass of neutron, $m_n = 1.675 \times 10^{-27}\ Kg$
Planck's Constant, $h = 6.626 \times 10^{-34}\ JS$, Gas Constant, $R = 8.314\ J/mol$
Permittivity Constant, $\varepsilon_0 = 8.854 \times 10^{-12}\ C^2/Nm^2$,
Avogadro Constant, $N_A = 6.023 \times 10^{23}$ atoms/mol
Boltzman Constant, $k = 8.62 \times 10^{-5}\ eV/K$, $\pi = 3.142$

Question 1 (40 Marks): Compulsory

(a) The interaction energy between Na^+ and Cl^- ions in the NaCl crystal can be written as

$$E(r) = [(-4.03 \times 10^{-28}\ /r) + (6.97 \times 10^{-96}\ /r^9)]$$

Where the energy is given in joules per ion pair and the interionic separation r is in metres

(I) Calculate the binding energy and equilibrium separation between Na^+ and Cl^- ions .

(II) Also estimate the elastic modulus Y of NaCl given that:

$$Y = (1/6r_0)\ [\ d^2E/dr^2\ ]_{r=r_0}$$

(b) Give a classification scheme for the various ferrous alloys.

(c) Define Refractory Metals and give its four examples.

(d) Calculate the atomic packing factor of an HCP structure with c/a ratio of 1.58.

(e) The ionic radii of Mg^{2+} and S^{2-} respectively are 0.65 Å and 1.84 Å. Calculate the force of attraction between these ions.

(f)) Define each of the following :

(I) Low Carbon Steel (II) Medium Carbon Steel (III) High Carbon Steel

are metal withstand the action of heat

Scanned by CamScanner

Question 4 (20 Marks)

(a) A common metal is known to have a cubic unit cell with an edge length of 0.288 nm. If this metal has a density of 7.20 g/cm^3 and an atomic weight of 52.0 g/mol.

(i) Use the above information to deduce the name of the metal crystal structure.

(ii) Calculate the atomic packing factor of this metal.

(b) Distinguish between Annealing and Normalising heat treatment processes.

(c) (i) State Heisenberg Uncertainty principle and illustrate with equations.

(ii) The mass of an electron particle is 9.11×10^{-31} Kg. If the uncertainty in the measurement of position is 0.04 m, calculate the error or uncertainty in the measurement of velocity.

$15\ mvr = n\hbar$

Question 5 (20 Marks)

(a) (i) State four factors that influence diffusion in materials.

(ii) Calculate the cube edge length 'a' for a BCC unit cell with atomic radius of 1.24 Å

(b) State Pauli's Exclusion Principle.

(c) Copper with atomic radius of 0.128 nm has an FCC crystal structure and an atomic weight of 63.5 g/mol. Calculate its theoretical density.

(d) Define phase diagrams and state its major uses in metallurgy.

Question 6 (20 Marks)

(a) Show that the steady-state form of Schrodinger's equation is given by:

$$\nabla^2\psi + 8\pi^2 m/h^2\ (E-V)\ \psi = 0$$

(b) State four applications of ceramic materials.

(c) Show that the atomic packing factor of an FCC unit cell is 0.74

Scanned by CamScanner

UNIVERSITY OF IBADAN
FACULTY OF TECHNOLOGY
DEPARTMENT OF MECHANICAL ENGINEERING
BACHELOR OF SCIENCE DEGREE EXAMINATION
2015/2016 SESSION (FIRST SEMESTER)

Course No.: TME 313 | Course Title: Material Science
Date: Thursday, 28 July, 2016 | Hours: 3 | Time: 8:00 - 11:00 am
INSTRUCTIONS: Answer Four (4) Questions only. Question 1 is compulsory.

Useful Constants	
Charge of electron, $e = 1.6 \times 10^{-19}\ C$,	Mass of electron, $m_e = 9.11 \times 10^{-31}\ Kg$
Mass of proton, $m_p = 1.672 \times 10^{-27}\ Kg$,	Mass of neutron, $m_n = 1.675 \times 10^{-27}\ Kg$
Planck's Constant, $h = 6.626 \times 10^{-34}\ JS$,	Gas Constant, $R = 8.314\ J/mol$
Permitivity Constant, $\varepsilon_0 = 8.854 \times 10^{-12}\ C^2/Nm^2$,	
Avogadro Constant, $N_A = 6.023 \times 10^{23}$ atoms/mol	
Boltzman Constant, $k = 8.62 \times 10^{-5}\ eV/K$, $\pi = 3.142$	

QUESTION 1 (40 MARKS): COMPULSORY

(a) Briefly, justify why material engineers considered Aluminium and Titanium not effective as sacrificial anodes for the protection of steel pipeline against corrosion even though they are both anodic to steel.

(b) An aluminium alloy plate of cross-section 30 mm by 5 mm is subjected to a tensile load. If the yield strength of the alloy is 40 MPa and its modulus of elasticity is 70 GPa, calculate the
(I) maximum load that the plate can withstand without undergoing a permanent deformation
(II) strain in the plate under this load

(c) A Brinell hardness test is performed on a steel sample using a load of 2000 kg and a 10 mm indenter. The compression produced on the surface of the steel is 2.9 mm in diameter. Calculate the Brinell hardness number and the approximate value of the alloy's tensile strength.

(d) Show for the BCC crystal structure that the unit cell edge length a and the atomic radius R are related through: $a = 4R/\sqrt{3}$.

(e) Define with examples (i) Biomaterials (ii) Composites

(f) Define phase diagrams and state its major uses in metallurgy

(g) In concise form, define *Piezoelectric Material* and describe its applications in helicopters.

(h) A common metal is known to have a cubic unit cell with an edge length of 0.288 nm. If this metal has an atomic weight of 52.0 g/mol and a density of 7.20 g/cm^3 ;
(I) Use the above information to deduce the name of the metal crystal structure
(II) Calculate the atomic packing factor of this metal

(i) According to AISI and SAE standards, define each of the following:
I. Low Carbon Steel (II) Medium Carbon Steel (III) High Carbon Steel

(j) State any eight (8) forms of corrosion

(k) When copper metal was diffused into Silicon at 350 °C, the diffusion coefficient was found to be 1.57×10^{-10} m^2/s at the activation energy of 41,500 J/mol. Calculate the expected diffusion coefficient at 820 °C. (Given that R = 8.314 J/mol-k).

$$D_0 = -D\left[\frac{Q_d}{RT}\right]$$

$$\ln\frac{D_2}{D_1} = \frac{Q}{R}\left(\frac{1}{T_1} - \frac{1}{T_2}\right)$$

Scanned by CamScanner

n
1
2
3
4

QUESTION 2 (20 MARKS)

(a) An experienced corrosion Engineer observed that a 1040 Steel alloy plate of density 7.79 g/cm^3 with dimensions 50 inches by 50 inches experienced a weight loss of 300 g in crude oil contaminated seawater after a period of 30 months. His Study revealed that a 18-8 stainless steel of equal dimensions with 1040 steel but with density of 7. 89 g/cm^3 experienced a weight loss of 50 g in the same environment and equal period of exposure. Justify by calculating their respective CPR's in mpy, the suitable alloy to be selected for this medium. *State the key constituents' elements of the selected alloy that makes it a better alloy in the environment.*

(b) Define Heat treatment and state four benefits of this process

(c) Zinc has lattice parameters a and c as 2.66 Å and 4.95 Å respectively. Calculate the packing fraction of Zinc given that its atomic radius is 1.31 Å.

(d) Define the following terms:
(I) Eutectoid steel (II) Hypoeutectoid steels (III) Hypereutectoid steels

QUESTION 3 (20 MARKS)

(a) The interaction energy between Na^+ and Cl^- ions in the NaCl crystal can be written as

$$E(r) = [(-4.03 \times 10^{-28} \ /r) \ + (6.97 \times 10^{-96} \ /r^8)]$$

Where the energy is given in joules per ion pair and the interionic separation r is in meters

(I) Calculate the binding energy and equilibrium separation between Na^+ and Cl^- ions .

(II) Also estimate the elastic modulus of Y of NaCl given that;

$$Y = (1/6r_0) \ [\ d^2E/dr^2 \ ]_{r=r_0}$$

(b) State four applications of ceramic materials

(c) Show that the atomic packing factor of an FCC unit cell is 0.74

(d) State any five criticisms of Bohr's theory of hydrogen atom

QUESTION 4 (20 MARKS)

(a) The atomic weight, density and atomic radius for three hypothetical alloys are given in table Q4. For each, determine whether its crystal structure is FCC, BCC or Simple Cubic.

Table Q4: Properties Data for Hypothetical Alloy materials

Alloy	Atomic Weight (g/mol)	Density (g/cm^3)	Atomic Radius (nm)
A	43.1	6.40	0.122
B	184.4	12.30	0.146
C	91.6	9.60	0.137

(b) A specimen of a 4340 steel alloy having a plain strain fracture toughness of 45 $MPa\sqrt{m}$ is exposed to a stress of 1000 MPa. Given that the dimensional factor $Y = 1.0$,

(i) Will this specimen experience fracture if it is known that the largest surface crack is 0.76 mm long?

(ii) Give reason for your answer in a(i)

(c) State Heisenberg Uncertainty principle and illustrate with equations

QUESTION 5 (20 MARKS)

(a) State Fick's first law of diffusion

(b) The diffusion coefficient for copper atoms in aluminium is found to be $1.28 \times 10^{-22} \ m^2/s$ at 400 K and $5.75 \times 10^{-19} \ m^2/s$ at 500 K. Calculate the temperature at which its value is $10^{-16} \ m^2/s$.

(c) The diffusion coefficient of copper in aluminium is higher than that of aluminium in copper at a given temperature. Give two reasons why this is so.

(d) Explain in a concise form why the activation energy of diffusion of carbon in γ-Fe (FCC) is much higher than that of carbon in α-Fe (BCC).

Scanned by CamScanner

(e) From the perspective of effect of composition and structure on material properties (**Steels as a case study**), state two examples each of alloying elements that are:

(i) ferrite promoters (ii) austenite stabilizers

QUESTION 6 (20 MARKS)

(c) The crystal structure of titanium is HCP with a c/a ratio of 1.58. Given that its atomic radius and atomic weights are 1.48 Å and 47.867 g/mol respectively, Calculate its

(I) Atomic Packing Factor (II) theoretical density

(b) Show that the steady-state form of Schrodinger's equation is given by:

$$\nabla^2\psi + 8\pi^2 m/h^2 (E-V)\psi = 0$$

(c) Determine the percentage of pearlite in annealed 1030 steel which is slowly cooled to room temperature

(d) State Pauli's Exclusion Principle

(e) In accordance with Pauli's Exclusion Principle, describe the four quantum numbers status of each of the outermost electrons in Boron atom.

$$\rho = \frac{n \times Aw}{Aw}$$

$$n = \frac{\rho \times N_A \times V_c}{Aw}$$

$$n = \frac{7.20 \times 6.02 \times 10^{23} \times 0.288}{52} = 2$$

$\therefore$ A is BCC

$$APF = \frac{nV_s}{V_c}$$

Scanned by CamScanner

UNIVERSITY OF IBADAN
FACULTY OF TECHNOLOGY
DEPARTMENT OF MECHANICAL ENGINEERING
BACHELOR OF SCIENCE DEGREE EXAMINATION
2013/2014 SESSION

SEMESTER TEST

Course No.: TME 313 Course Title: Material Science
Date: Monday, 1st September, 2014 Hours: 1 hr. 30 mins. Time: 9:00 - 10:30 am
INSTRUCTIONS: Answer all the questions

Question 1

(a) Show that the steady-state form of Schrodinger's equation is given by:

$$\nabla^2\psi + 8\pi^2 m/h^2 (E-V)\psi = 0$$

(b) Give a classification scheme for the various ferrous alloys

(c) Determine the interplanar spacing when a beam of X-ray of wavelength 1.54 Å is directed towards the crystal at an angle of 30.7^0 to the atomic plane in the second order.

(d) What are the compositions of Duralumin and state three industrial applications of this alloy.

Question 2

(a) The atomic weight, density and atomic radius for three hypothetical alloys are given in table 1. For each, determine whether its crystal structure is FCC, BCC or Simple Cubic.

Table 1: Properties Data for Hypothetical Alloy materials

Alloy	Atomic Weight (g/mol)	Density (g/cm^3)	Atomic Radius (nm)
A	43.1	6.40	0.122
B	184.4	12.30	0.146
C	91.6	9.60	0.137

(b) State Fick's first law of diffusion and support with relevant governing equations. State what each parameter in the equation(s) represents.

(c) When copper metal was diffused into Silicon at 350 °C, the diffusion coefficient was found to be 1.57×10^{-10} m^2/s at the activation energy of 41,500 J/mol. Calculate the expected diffusion coefficient at 420 °C. (Given that R= 8.314 J/mol-k).

(d) State four classes of defects in crystal solids.

Scanned by CamScanner

Question 3

(a) A common metal is known to have a cubic unit cell with an edge length of 0.288 nm. If this metal has a density of 7.20 g/cm^3 ;

(i) Use the above information to deduce the name of the metal crystal structure

(ii) Calculate the atomic packing factor of this metal

(b) State four factors which affect the diffusion rate in solid crystals

(c) State Pauli's Exclusion Principle

(d) Define phase diagrams and state its major uses in metallurgy

Question 4

(a) (i) Distinguish between Low Carbon Steel, Medium Carbon Steel and High Carbon Steel

(ii) State how the change in their carbon compositions affects their mechanical properties

(iii) State the applications of steel alloys in construction industry

(iv) Mention two principal elemental compositions of different stainless steel alloys grades such as 15-8 SS, 18-8 SS, 316 SS, 316L SS and KS7 SS that enhances their corrosion resistance characteristics

(b) The ionic radii of Mg^{2+} and S^{2-} respectively are 0.65 Å and 1.84 Å. Calculate the force of attraction between these ions.

Scanned by CamScanner

(g) Show for the BCC crystal structure that the unit cell edge length a and the atomic radius R are related through: $a = 4R/\sqrt{3}$.

(h) Define with examples (i) Biomaterials (ii) Composites.

Question 2 (20 Marks)

(a) State any four heat treatment processes.

(b) Calculate the atomic packing factor of an HCP structure with c/a ratio of 1.58

(c) Briefly explain with the aid of diagram, how the Rutherford α-scattering experiment led to the concept of the nuclear model of atom.

(d) Define

(i) Corrosion (ii) Burgers vector.

Question 3 (20 Marks)

(a) Define Heat treatment and state four benefits of this process.

(b) Distinguish between low carbon steels, medium carbon steels and high carbon steels. State how the change in their compositions generally affects their strength and hardness properties.

(c) An experienced corrosion Engineer discovered that a 1018 Steel alloy plate of density 7.85 g/cm^3 with dimensions 20 inches by 25 inches experienced a weight loss of 300 g in polluted seawater after a period of 10 months. His Study revealed that a 304 stainless steel of equal dimensions with 1018 steel but with density of 7.91 g/cm^3 experienced a weight loss of 25 g in the same environment and equal period of exposure. Justify by estimating their respective CPR's in mpy, the suitable alloy to be selected for this medium. State the key component elements of the selected alloy that makes it a better alloy in the environment.

Question 4 (20 Marks)

(a) (i) State the two limitations of Thomson's atomic model.

(ii) Calculate the cube edge length 'a' for a BCC unit cell with atomic radius of 1.24 Å

(b) State Pauli's Exclusion Principle.

(c) Copper with atomic radius of 0.128 nm has an FCC crystal structure and an atomic weight of 63.5 g/mol. Calculate it's theoretical density.

(d) Define phase diagrams and state its major uses in metallurgy.

Scanned by CamScanner

Question 5 (20 Marks)

(a) The interaction energy between Na^+ and Cl^- ions in the NaCl crystal can be written as

$$E(r) = [(-4.03 \times 10^{-28} / r) + (6.97 \times 10^{-96} / r^8)]$$

Where the energy is given in joules per ion pair and the interionic separation r is in meters

(i) Calculate the binding energy and equilibrium separation between Na^+ and Cl^- ions.

(ii) Also estimate the elastic modulus of Y of NaCl given that;

$$Y = (1/6r_0)\,[\,d^2E/dr^2\,]_{r=r_0}$$

(b) State four applications of ceramic materials. cutting

(c) Show that the atomic packing factor of an FCC unit cell is 0.74

Question 6 (20 Marks)

(a) A common metal is known to have a cubic unit cell with an edge length of 0.288 nm. If this metal has a density of 7.20 g/cm^3 and an atomic weight of 52.0 g/mol.

(i) Use the above information to deduce the name of the metal crystal structure.

(ii) Calculate the atomic packing factor of this metal.

when to for $\times 10^{-9}$ volume

(b) Distinguish between Annealing and Normalising heat treatment processes.

(c) (i) State Heisenberg Uncertainty principle and illustrate with equations.

(ii) The mass of an electron particle is 9.11×10^{-31} Kg. If the uncertainty in the measurement of position is 0.04 m, calculate the error or uncertainty in the measurement of velocity.

$mvr = n\hbar$?

Annealing	Normalising
improves softness ductility & strength	~~strength~~ hardness
relieves internal stress	
specific machine	homogenised machine better surface finish

$57 \to 37 = 20$

$APF = \frac{nV_s}{V_c}$ $V_c = a^3$ $a = \frac{4R}{\sqrt{3}}$

$\frac{\frac{4}{3}\pi R^3}{(2.52)^3}$ 6 $\frac{4 \pi \times 4}{3(2\sqrt{2})^3}$

Scanned by CamScanner

UNIVERSITY OF IBADAN
FACULTY OF TECHNOLOGY
DEPARTMENT OF MECHANICAL ENGINEERING
BACHELOR OF SCIENCE DEGREE EXAMINATION
2015/2016 SESSION

SEMESTER TEST II

Course No.: TME 313 **Course Title:** Material Science
Date: Tuesday, 26th April, 2016 **Hours:** 45 minutes **Time:** 10:00 am - 10:45 am
INSTRUCTIONS: Answer all the questions

Question 1

(a) State Fick's first law of diffusion

(b) The diffusion coefficient for copper atoms in aluminium is found to be $1.28 \times 10^{-22}\ m^2/s$ at $400\ K$ and $5.75 \times 10^{-19}\ m^2/s$ at $500\ K$. Calculate the temperature at which its value is $10^{-16}\ m^2/s$.

(c) The diffusion coefficient of copper in aluminium is higher than that of aluminium in copper at a given temperature. Give two reasons why this is so.

(d) Explain in a concise form why the activation energy of diffusion of carbon in γ-Fe (FCC) is much higher than that of carbon in α-Fe (BCC).

(e) From perspective of the effect of composition and structure on material properties (Steels as a case study), state two examples each of alloying elements that are:
(i) ferrite promoters (ii) austenite stabilizers

Question 2

(a) Define phase diagrams and state its major uses in metallurgy.

(b) With the aid of a well labelled diagram, give a concise description of iron-carbon phase diagram

(c) The crystal structure of titanium is HCP with a c/a ratio of 1.58. Given that its atomic radius and atomic weights are 1.48 Å and 47.867 g/mol respectively, Calculate its
(i) Atomic Packing Factor (ii) theoretical density

(d) Define the following mechanical properties of materials:

(i) Hardness (ii) Fatigue (iii) Ductility (iv) Toughness

(e) Define the following classes of materials

(i) Alloys (ii) Composites (iii) Biomaterials (iv) Polymers (v) Smart materials

Scanned by CamScanner

UNIVERSITY OF IBADAN

FACULTY OF TECHNOLOGY

DEPARTMENT OF MECHANICAL ENGINEERING
BACHELOR OF SCIENCE DEGREE EXAMINATION
2014/2015 SESSION

SEMESTER TEST II

Course No.: TME 313 Course Title: Material Science
Date: Tuesday, 14th July, 2015 Hours: 45 Minutes Time: 10:00 am - 10:45 am
INSTRUCTIONS: Answer all the questions

Question 1

(a) Define phase diagrams and state its major uses in metallurgy.
(b) With the aid of a well labelled diagram, give a concise description of iron-carbon phase diagram
(c) The crystal structure of titanium is HCP with a c/a ratio of 1.58. Given that its atomic radius and atomic weights are 1.48 Å and 47.867 g/mol respectively, Calculate its
(i) Atomic Packing Factor (ii) theoretical density

(d) Define the following mechanical properties of materials:

(i) Hardness (ii) Fatigue (iii) Ductility (iv) Toughness

(e) Define the following classes of materials

(i) Alloys (ii) Composites (iii) Biomaterials (iv) Polymers (v) Smart materials

Question 2

(a) In a composite material, true stresses of 400 MPa and 500 MPa produce true plastic strains of 0.18 and 0.27 respectively. Compute the true stress corresponding to a true strain of 0.24.
(b) State four applications of ceramic materials.
(c) Show that the atomic packing factor of an FCC unit cell is 0.74.
(d) A Brinell hardness test using a 500 kg load with a 10 mm diameter indenter produces a 5.0 mm compression on an aluminium alloy specimen. Calculate the Brinell hardness number for the aluminium alloy.
(e) Define the following terms
(i) Eutectoid steels
(ii) Hypoeutectoid steels
(iii) Hypereutectoid steels
(iv) Microstructure and Microstructural Examinations of Materials
(v) Superalloys

Scanned by CamScanner

UNIVERSITY OF IBADAN

FACULTY OF TECHNOLOGY

DEPARTMENT OF MECHANICAL ENGINEERING

BACHELOR OF SCIENCE DEGREE EXAMINATION

2014/2015 SESSION (FIRST SEMESTER)

Course No.: TME 313 Course Title: Material Science

Date: Tuesday, 4 August, 2015 Hours: 3 Time: 8:00 - 11:00 am

INSTRUCTIONS: Answer Four (4) Questions only. Question 1 is compulsory.

Useful Constants
Charge of electron, $e = 1.6 \times 10^{-19}\ C$, Mass of electron, $m_e = 9.11 \times 10^{-31}\ Kg$
Mass of proton, $m_p = 1.672 \times 10^{-27}\ Kg$, Mass of neutron, $m_n = 1.675 \times 10^{-27}\ Kg$ Planck's Constant, $h = 6.626 \times 10^{-34}\ JS$, Gas Constant, $R = 8.314\ J/mol$
Permitivity Constant, $\varepsilon_0 = 8.854 \times 10^{-12}\ C^2/Nm^2$, Avogadro Constant, $N_A = 6.023 \times 10^{23}$ atoms/mol
Boltzman Constant, $k = 8.62 \times 10^{-5}\ eV/K$, $\pi = 3.142$

QUESTION 1 (40 MARKS): COMPULSORY

(a) The interaction energy between Na^+ and Cl^- ions in the NaCl crystal can be written as

$$E(r) = [(-4.03 \times 10^{-28}\ /r) + (6.97 \times 10^{-96}\ /r^8)]$$

Where the energy is given in joules per ion pair and the interionic separation r is in metres

i. Calculate the binding energy and equilibrium separation between Na^+ and Cl^- ions .

ii. Also estimate the elastic modulus Y of NaCl given that;

$$Y = (1/6r_0)\ [\ d^2E/dr^2\ ]_{r=r0}$$

(b) Give a classification scheme for the various metals/alloys.

(c) A Brinell hardness test is performed on a 1047 steel using a load of 3000 kg and a 10 mm indenter. The compression produced on the surface of the steel is 3.5 mm in diameter. Calculate the steel Brinell hardness number and deduce the approximate value of its tensile strength.

(d) A common metal is known to have a cubic unit cell with an edge length of 0.288 nm. If this metal has a density of 7.20 g/cm^3 and an atomic weight of 52.0 g/mol.

(i) Use the above information to deduce the name of the metal crystal structure.

(ii) Calculate the atomic packing factor of this metal.

(e) State any five criticisms of Bohr's theory of hydrogen atom.

Scanned by CamScanner

(f) Define each of the following:

(i) Low Carbon Steel (ii) Medium Carbon Steel (iii) High Carbon Steel

(g) Briefly, justify why material engineers consider Aluminium and Titanium not effective as sacrificial anodes for the protection of steel pipeline against corrosion even though they are both anodic to steel.

(h) Show for the BCC crystal structure that the unit cell edge length a and the atomic radius R are related through: $a = 4R/\sqrt{3}$.

(i) In concise form, describe the applications of *Piezoelectric Material* in helicopters.

(j) When copper metal was diffused into Silicon at 350 °C, the diffusion coefficient was found to be 1.57×10^{-10} m^2/s at the activation energy of 41,500 J/mol. Calculate the expected diffusion coefficient at 820 °C. (Given that R = 8.314 J/mol-k).

(k) State any eight (8) forms of corrosion

QUESTION 2 (20 MARKS)

(a) Define phase diagrams and state its major uses in metallurgy.

(b) With the aid of a well labelled diagram, give a concise description of iron-carbon phase diagram

(c) Zinc has lattice parameters a and c as 2.66 Å and 4.95 Å respectively. Calculate the packing fraction of Zinc given that its atomic radius is 1.31 Å.

(d) A plain carbon steel of grain size 28 μm has yield strength of 320 MPa. When the grain size is reduced through appropriate thermomechanical processing to 20 μm, the yield strength is 350 MPa. Determine the yield strength for a steel of grain size (i) 10 μm (ii) 40 μm

QUESTION 3 (20MARKS)

(a) Define the following terms:

(i) Eutectoid steel (ii) Hypoeutectoid steels (iii) Hypereutectoid steels

(b) Show that the steady-state form of Schrodinger's equation is given by:

$$\nabla^2\psi + 8\pi^2 m/h^2 (E-V)\psi = 0$$

(c) An aluminium alloy plate of cross-section 25 mm by 3 mm is subjected to a tensile load. Given that the yield strength of the alloy is 40 MPa and its modulus of elasticity is 70 GPa, determine the

(i) Maximum load that the plate can withstand without permanent deformation.

(ii) Strain in the plate under the load.

(d) (i) State Heisenberg Uncertainty principle and illustrate with equations.

( ) The mass of an electron particle is 9.11×10^{-31} Kg. If the uncertainty in the measurement of position is 0.04 m, calculate the error or uncertainty in the measurement of velocity.

Scanned by CamScanner

QUESTION 4 (20 MARKS)

(a) An experienced corrosion Engineer observed that a 1040 Steel alloy plate of density 7.79 g/cm^3 with dimensions 50 inches by 50 inches experienced a weight loss of 300 g in crude oil contaminated seawater after a period of 30 months. His Study revealed that a 18-8 stainless steel of equal dimensions with 1040 steel but with density of 7. 89 g/cm^3 experienced a weight loss of 50 g in the same environment and equal period of exposure. Justify by calculating their respective CPR's in mpy, the suitable alloy to be selected for this medium. *State the key constituents' elements of the selected alloy that makes it a better alloy in the environment.*

(b) (i) State four factors that influence diffusion in materials.

(ii) Calculate the cube edge length 'a' for a BCC unit cell with atomic radius of 1.24 Å

(c) State the two limitations of Thomson's atomic model.

(d) Mention the <u>two</u> principal elemental compositions common to the following different stainless steel alloys grades: **15-8 SS, 18-8 SS, 316 SS, 316L SS and KS7 SS** that enhances their corrosion resistance characteristics.

QUESTION 5 (20 MARKS)

(a) The yield strength of a tool steel is 1500 MPa. If the fracture toughness is 100 $MPa\sqrt{m}$, calculate the stress which cause fracture in samples of the steel containing a surface crack of size (i) 6.0 mm (ii) 3.0 mm (iii) 1.0. Which of the samples will undergo catastrophic failure?

(b) (i) State Pauli's Exclusion Principle.

(ii) In accordance with Pauli's Exclusion Principle, describe the four quantum numbers status of each of the outermost electrons in carbon atom.

(c) Copper with atomic radius of 0.128 nm has an FCC crystal structure and an atomic weight of 63.5 g/mol. Calculate its theoretical density.

(d) Define the following terms:

(i) Corrosion (ii) Burgers vector (iii) Peritectic reaction (iv) Eutectic reaction (v) Eutectoid reaction

QUESTION 6 (20 MARKS)

(a) The crystal structure of titanium is HCP with a c/a ratio of 1.58. Given that its atomic radius and atomic weights are 1.48 Å and 47.867 g/mol respectively, Calculate its (i) Atomic Packing Factor (ii) theoretical density

(b) Define the following mechanical properties of materials:

(i) Hardness (ii) Fatigue (iii) Ductility (iv)Toughness

(c) Define the following classes of materials:

(i) Alloys (ii) Composites (iii) Biomaterials (iv) Polymers (v) Smart materials

(d) (i) Calculate the longest and smallest wavelengths in Pfund series.

(ii) Define Heat treatment and state any of its five benefits.

(iii) State five techniques for corrosion prevention and control in engineering materials.

Scanned by CamScanner

QUESTION 4 (20 MARKS)

(a) An experienced corrosion Engineer observed that a 1040 Steel alloy plate of density 7.79 g/cm^3 with dimensions 50 inches by 50 inches experienced a weight loss of 300 g in crude oil contaminated seawater after a period of 30 months. His Study revealed that a 18-8 stainless steel of equal dimensions with 1040 steel but with density of 7. 89 g/cm^3 experienced a weight loss of 50 g in the same environment and equal period of exposure. Justify by calculating their respective CPR's in mpy, the suitable alloy to be selected for this medium. *State the key constituents' elements of the selected alloy that makes it a better alloy in the environment.*

(b) (i) State four factors that influence diffusion in materials.

(ii) Calculate the cube edge length 'a' for a BCC unit cell with atomic radius of 1.24 Å

(c) State the two limitations of Thomson's atomic model.

(d) Mention the **two** principal elemental compositions common to the following different stainless steel alloys grades: **15-8 SS, 18-8 SS, 316 SS, 316L SS and KS7 SS** that enhances their corrosion resistance characteristics.

QUESTION 5 (20 MARKS)

(a) The yield strength of a tool steel is 1500 MPa. If the fracture toughness is 100 $MPa\sqrt{m}$, calculate the stress which cause fracture in samples of the steel containing a surface crack of size (i) 6.0 mm (ii) 3.0 mm (iii) 1.0. Which of the samples will undergo catastrophic failure?

(b) (i) State Pauli's Exclusion Principle.

(ii) In accordance with Pauli's Exclusion Principle, describe the four quantum numbers status of each of the outermost electrons in carbon atom.

(c) Copper with atomic radius of 0.128 nm has an FCC crystal structure and an atomic weight of 63.5 g/mol. Calculate its theoretical density.

(d) Define the following terms:

(i) Corrosion (ii) Burgers vector (iii) Peritectic reaction (iv) Eutectic reaction (v) Eutectoid reaction

QUESTION 6 (20 MARKS)

(a) The crystal structure of titanium is HCP with a c/a ratio of 1.58. Given that its atomic radius and atomic weights are 1.48 Å and 47.867 g/mol respectively, Calculate its

(i) Atomic Packing Factor (ii) theoretical density

(b) Define the following mechanical properties of materials:

(i) Hardness (ii) Fatigue (iii) Ductility (iv)Toughness

(c) Define the following classes of materials:

(i) Alloys (ii) Composites (iii) Biomaterials (iv) Polymers (v) Smart materials

(d) (i) Calculate the longest and smallest wavelengths in Pfund series.

(ii) Define Heat treatment and state any of its five benefits.

(iii) State five techniques for corrosion prevention and control in engineering materials.

Scanned by CamScanner

QUESTION 4 (20 MARKS)

(a) An experienced corrosion Engineer observed that a 1040 Steel alloy plate of density 7.79 g/cm^3 with dimensions 50 inches by 50 inches experienced a weight loss of 300 g in crude oil contaminated seawater after a period of 30 months. His Study revealed that a 18-8 stainless steel of equal dimensions with 1040 steel but with density of 7. 89 g/cm^3 experienced a weight loss of 50 g in the same environment and equal period of exposure. Justify by calculating their respective CPR's in mpy, the suitable alloy to be selected for this medium. *State the key constituents' elements of the selected alloy that makes it a better alloy in the environment.*

(b) (i) State four factors that influence diffusion in materials.

(ii) Calculate the cube edge length 'a' for a BCC unit cell with atomic radius of 1.24 Å

(c) State the two limitations of Thomson's atomic model.

(d) Mention the **two** principal elemental compositions common to the following different stainless steel alloys grades: **15-8 SS, 18-8 SS, 316 SS, 316L SS and KS7 SS** that enhances their corrosion resistance characteristics.

QUESTION 5 (20 MARKS)

(a) The yield strength of a tool steel is 1500 MPa. If the fracture toughness is 100 $MPa\sqrt{m}$, calculate the stress which cause fracture in samples of the steel containing a surface crack of size (i) 6.0 mm (ii) 3.0 mm (iii) 1.0. Which of the samples will undergo catastrophic failure?

(b) (i) State Pauli's Exclusion Principle.

(ii) In accordance with Pauli's Exclusion Principle, describe the four quantum numbers status of each of the outermost electrons in carbon atom.

(c) Copper with atomic radius of 0.128 nm has an FCC crystal structure and an atomic weight of 63.5 g/mol. Calculate its theoretical density.

(d) Define the following terms:

(i) Corrosion (ii) Burgers vector (iii) Peritectic reaction (iv) Eutectic reaction (v) Eutectoid reaction

QUESTION 6 (20 MARKS)

(a) The crystal structure of titanium is HCP with a c/a ratio of 1.58. Given that its atomic radius and atomic weights are 1.48 Å and 47.867 g/mol respectively, Calculate its (i) Atomic Packing Factor (ii) theoretical density

(b) Define the following mechanical properties of materials:

(i) Hardness (ii) Fatigue (iii) Ductility (iv)Toughness

(c) Define the following classes of materials:

(i) Alloys (ii) Composites (iii) Biomaterials (iv) Polymers (v) Smart materials

(d) (i) Calculate the longest and smallest wavelengths in Pfund series.

(ii) Define Heat treatment and state any of its five benefits.

(iii) State five techniques for corrosion prevention and control in engineering materials.

Scanned by CamScanner

UNIVERSITY OF IBADAN
FACULTY OF TECHNOLOGY
DEPARTMENT OF MECHANICAL ENGINEERING
BACHELOR OF SCIENCE DEGREE EXAMINATION
2016/2017 SESSION (FIRST SEMESTER)

Course Code: TME 312 **Course Title:** Workshop Practice II
Date: Tuesday, 25, July, 2017 **Hours:** 1½ **Time:** 8:00 am - 9:30 am
Instruction: Answer all questions.

Question 1

a) A cylindrical job 100 mm diameter is to be turned at a cutting speed of 25 m/min, the feed being 1.5 mm/rev. if the length of the job is 150 mm, find the time required for one cut.
b) A milling cutter has 12 teeth and a feed of 0.12 mm per tooth is to be used. If the cutter makes 90 rev/min, calculate: (i) the feed in millimetres per revolution (ii) the feed in millimetres per minute
c) What is the function of a coolant in machining operations [20 Marks]

Question 2

a) List the functions of the following wood work machines: (i) circular sawing machine (ii) Pull over cross cutting machine (iii) Narrow band saw
b) Mention five safety precautions to be taken in a fitting workshop
c) In a tabular form, identify five (5) hand tools under the following categories; (i) cutting (ii) driving (iii) measuring tools [20 Marks]

Question 3

a) When is welding required in a joining process?
b) Mention three types of flame that can be obtained in oxyacetylene welding
c) Mention five safety precautions to be taken in a welding workshop
d) Mention four common machine operations in an Engineering workshop [20 Marks]

Question 4

a) (i) Give reasons why R12 and R22 refrigerants are no longer used for refrigeration systems? (ii) What are the advantages of R134a and R410a Refrigerants?
b) State the advantages of a ring circuit over power extension boards.
c) What is the function of a capacitor in a fan? [20 Marks]

Question 5

a) Sketch and label the winding diagram of a crown table fan
b) What do you understand by the following; (i) core (ii) fettling (iii) cope (iv) drag (v) Sprue
c) Draw and label correctly the mould cross section shown in Fig. Q5 [20 Marks]

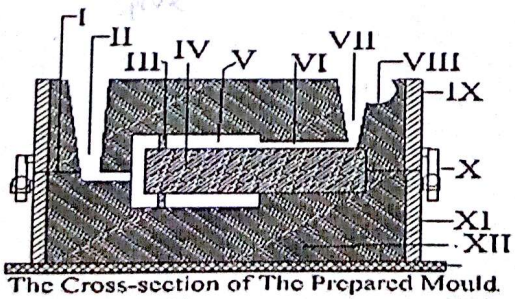

The Cross-section of The Prepared Mould for Casting a Piston

Fig. Q5

Scanned by CamScanner

UNIVERSITY OF IBADAN
FACULTY OF TECHNOLOGY
DEPARTMENT OF MECHANICAL ENGINEERING
BACHELOR OF SCIENCE DEGREE EXAMINATION
2016/2017 SESSION (FIRST SEMESTER)

Course Code: TME 312 **Course Title:** Workshop Practice II
Date: Tuesday, 25, July, 2017 **Hours:** 1½ **Time:** 8:00 am – 9:30 am
Instruction: Answer all questions.

Question 1

a) A cylindrical job 100 mm diameter is to be turned at a cutting speed of 25 m/min, the feed being 1.5 mm/rev. if the length of the job is 150 mm, find the time required for one cut.
b) A milling cutter has 12 teeth and a feed of 0.12 mm per tooth is to be used. If the cutter makes 90 rev/min, calculate: (i) the feed in millimetres per revolution (ii) the feed in millimetres per minute
c) What is the function of a coolant in machining operations [20 Marks]

Question 2

a) List the functions of the following wood work machines: (i) circular sawing machine (ii) Pull over cross cutting machine (iii) Narrow band saw
b) Mention five safety precautions to be taken in a fitting workshop
c) In a tabular form, identify five (5) hand tools under the following categories; (i) cutting (ii) driving (iii) measuring tools [20 Marks]

Question 3

a) When is welding required in a joining process?
b) Mention three types of flame that can be obtained in oxyacetylene welding
c) Mention five safety precautions to be taken in a welding workshop
d) Mention four common machine operations in an Engineering workshop [20 Marks]

Question 4

a) (i) Give reasons why R12 and R22 refrigerants are no longer used for refrigeration systems? (ii) What are the advantages of R134a and R410a Refrigerants?
b) State the advantages of a ring circuit over power extension boards.
c) What is the function of a capacitor in a fan? [20 Marks]

Question 5

a) Sketch and label the winding diagram of a crown table fan
b) What do you understand by the following; (i) core (ii) fettling (iii) cope (iv) drag (v) Sprue
c) Draw and label correctly the mould cross section shown in Fig. Q5 [20 Marks]

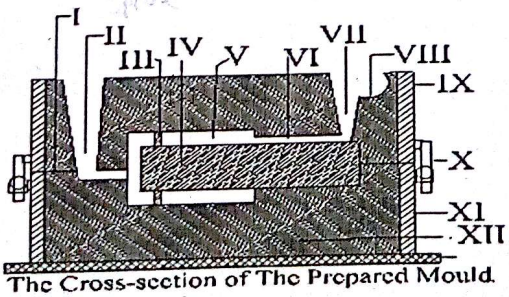

The Cross-section of The Prepared Mould for Casting a Piston

Fig. Q5

Scanned by CamScanner

UNIVERSITY OF IBADAN
FACULTY OF TECHNOLOGY
DEPARTMENT OF MECHANICAL ENGINEERING
BACHELOR OF SCIENCE DEGREE EXAMINATION
2015/2016 SESSION (FIRST SEMESTER)

Course No: TME 312 **Course Title:** Workshop Practice II
Date: Wednesday, 27 July, 2016 **Hours:** $1^1/_2$ **Time:** 11:30am-1:00pm
Instructions: Answer ALL the questions. Each question carries twenty (20) marks

QUESTION NO.1

(a) A cylindrical job 100 mm diameter is to be turned at a cutting speed of 25 m/min, the feed being 1.5 mm/rev. If the length of the job is 150 mm find the time required for 1 cut. (10 marks)

(b) A milling cutter has 12 teeth and a feed of 0.12 mm per tooth is to be used. If the cutter makes 90 rev/min. Calculate: (i) the feed in millimeters per revolution, (ii) the feed in millimeters per minute. (10 marks)

QUESTION NO.2

(a) Calculate the time needed to drill a 10 mm diameter hole through a plate 50 mm thick. The cutting speed is to be 15 m/min and the feed 0.20 mm/rev.

(Speed of drill is given by: $N = \frac{1000 \times Cutting\ speed}{\pi d}$)(10 marks)

(b) The limits shown on drawing for a mating hole and shaft were:
For the hole $40.000^{+0.025mm}_{+0.000\ mm}$ and for the shaft: $40.000^{+0.059\ mm}_{+0.043\ mm}$. Find the type of fit that exists between the hole and shaft. (10 marks)

QUESTION NO.3

(i) During a turning operation the power used in cutting is 2 kW. 70% of this power is converted into heat energy which is carried away by a coolant whose specific heat is 3500. If the temperature rise of the coolant is not to exceed 2°C, calculate the minimum flow of coolant needed. (10 marks)

(ii) A galvanized low carbon steel storage cistern has a nominal capacity of 3,000 litres and base measurement of 1.0 m by 2.0 m. What is the depth of the vessel? (10 marks)

QUESTION NO.4

(i) When is welding required in joining processes? (4 marks)

(ii) Mention three types of flame that can be obtained in oxyacetylene welding. (4 marks)

(iii) Mention five safety precautions in a mechanical welding workshop.(4 marks)

(iv) State and describe three (3) equipment that are employed in industry or standard workshop. (4 marks)

(v) (a) Name two different techniques whereby component shape is produced in machine tools.,
(b) State four common workshop machine operations (2 marks each = 4 marks)

Scanned by CamScanner

TAE 313 – FARM POWER AND MAINTENANCE I – TEST

TIME ALLOWED: 30 mins

INSTRUCTIONS: Answer All Questions

QUESTION NO.5

(i) In vapour compression system, state four fundamental processes that are completed in one cycle.(4 marks)

(ii) Differentiate between ceiling fan and table fan.(4 marks)

(iii) What do you understand by : (a) Gating, (b) Cavity (c) parting powder and (d) Sprue pin (4 marks)

(iv) State three factors that control the rate of evaporation of moisture from the surface of wood. (4 marks)

(v) (a) What is the function of coolant in machine operation? (b) What do you know about: Kiln drying and natural seasoning. (4 marks)

Scanned by CamScanner

TAE 313 – FARM POWER AND MAINTENANCE I – TEST

TIME ALLOWED: 30 mins

INSTRUCTIONS: Answer All Questions

1. On what basis are the following tractors classified?
   i. Crawler tractors
   ii. Standard row crop tractors
   iii. High clearance tractors
   iv. Universal tractor
2. Name the three ways implements are generally attached to and operated by tractors.
3. State the five ways implements can be classified based on tillage operations.
4. According to the type of the working parts, how are cultivators classified?
5. State the three commonly used dynamometers.
6. What are the three available types of strain gauges?
7. State the formula for calculating the horse power develop by a power unit in pulling Agricultural implements.
8. What are the three basic forces acting on a tractor at rest without a load.?
9. Explain why two tractors operating the same types of implements could have different weight transfer
10. What are the three main forces or force systems acting on a tillage implement moving at a constant speed?
11. State the two basic types of soil failure pattern.

Lecturer : Prof. E. A. Ajav

Scanned by CamScanner

UNIVERSITY OF IBADAN
FACULTY OF TECHNOLOGY
DEPARTMENT OF MECHANICAL ENGINEERING
BACHELOR OF SCIENCE DEGREE EXAMINATION
2015/2016 SESSION

SEMESTER TEST I

Course No.: TME 313 **Course Title:** Material Science
Date: Tuesday, 12th April, 2016 **Hours:** 45 minutes **Time:** 10:00 am - 10:45 am
INSTRUCTIONS: Answer all the questions

Question 1

(a) The atomic weight, density and atomic radius for three hypothetical alloys are given in table 1. For each, determine whether its crystal structure is FCC, BCC or Simple Cubic.

Table 1: Properties Data for Hypothetical Alloy materials

Alloy	Atomic Weight (g/mol) [A]	Density (g/cm^3) [ρ]	Atomic Radius (nm) [R]
A	43.1	6.40	0.122
B	184.4	12.30	0.146
C	91.6	9.60	0.137

(b) In concise form, describe the applications of *Piezoelectric Material* in helicopters

(c) With the aid of diagram, give a concise explanation of Rutherford Alpha-Scattering experiment and its implications for nature of atomic model contrary to J.J. Thomson model.

(d) Give a comprehensive definitions of the following:
(i) Material Science (ii) Material Engineering.

Question 2

(a) Show that the steady-state form of Schrodinger's equation is given by:

$$\nabla^2\psi + 8\pi^2 m/h^2 \, (E-V)\, \psi = 0$$

(b) State Pauli's Exclusion Principle

(c) In accordance with Pauli's Exclusion Principle, describe the four quantum numbers status of each of the outermost electrons in carbon atom.

(d) A common metal is known to have a cubic unit cell with an edge length of 0.288 nm. If this metal has an atomic weight of 52.0 g/mol and a density of 7.20 g/cm^3 ;

(i) Use the above information to deduce the name of the metal crystal structure

(ii) Calculate the atomic packing factor of this metal

(***Avogadro Constant***, $N_A = 6.023 \times 10^{23}$ atoms/mol)

$\rho = \frac{nA}{V_c N_A}$

Scanned by CamScanner

UNIVERSITY OF IBADAN

FACULTY OF TECHNOLOGY

DEPARTMENT OF MECHANICAL ENGINEERING
BACHELOR OF SCIENCE DEGREE EXAMINATION
2014/2015 SESSION

SEMESTER TEST I

Course No: TME 313
Date: Monday, 11th May, 2015 Hours: 1 hr.
INSTRUCTIONS: Answer all the questions

Course Title: Material Science
Time: 9:00 am – 10:00 am

Question 1

(a) Show that the steady-state form of Schrodinger's equation is given by:

$$\nabla^2\psi + 8\pi^2 m/h^2 (E-V)\psi = 0$$

$t = 0$

(b) (i) State Pauli's Exclusion Principle.

(ii) State Heisenberg Uncertainty principle and illustrate with equations.

(c) Define the following with examples

(i) Biomaterials (ii) Composites.

(d) In concise form, describe the applications of *Piezoelectric Material* in helicopters.

(e) (i) Calculate the longest and smallest wavelengths in Pfund series.

(ii) From basic electrostatic force of attraction and Bohr's quantum condition, show that the radius of the stationary orbits is given as:

$$r = \frac{4\pi\varepsilon_0 n^2 \hbar^2}{mZe^2}$$

Question 2

(a) State any five criticisms of Bohr's theory of hydrogen atom.

(b) With the aid of diagram, give a concise explanation of Rutherford Alpha-Scattering experiment and its implications for nature of atomic model contrary to J.J. Thomson model.

(c) Give comprehensive definitions of the following:

(i) Material Science (ii) Material Engineering.

(d) What do you understand by the term (i) Nanotechnology (ii) Smart Materials

(e) In accordance with Pauli's Exclusion Principle, describe the four quantum numbers status of each of the outermost electrons in carbon atom.

Scanned by CamScanner

UNIVERSITY OF IBADAN
FACULTY OF TECHNOLOGY
DEPARTMENT OF MECHANICAL ENGINEERING
BACHELOR OF SCIENCE DEGREE EXAMINATION
2014/2015 SESSION (FIRST SEMESTER)

Course No.: TME 311 | Course Title: Engineering Drawing III
Date: Thursday, 6 August, 2015 | Hours: 3 | Time: 11:30am - 2:30pm

INSTRUCTION: Answer all Questions. All dimensions are in millimetres, unless otherwise stated. Make sure you write your name, matriculation number and department on the title block. Use version of AutoCAD software that is not lower than AutoCAD 2006.

QUESTION 1

The adjusting unit shown in Fig. Q1 consists of a body (1), a handle (2), a pivot (3), a screw (4), a collar (5), and a pin (6).

Draw the following views of the completely assembled adjusting unit:

(a) a front view in the direction of arrow B, including all hidden detail;

(b) a sectional end view on the cutting plane AA.

(26 marks)

QUESTION 2

(a) Redraw the exploded view in Fig. Q2a as a 3-D solid model. (15 marks)

(b) Assemble the exploded view in Question 2(a) to obtain a 3-D solid model assembly. (9 marks)

QUESTION 3

(a) Position the conventional weld symbols on the reference lines in Fig. Q3a. (10 marks)

(b) Draw the given views of the lines in Fig. Q3b and determine their traces, true lengths and true angles of inclination to the horizontal and vertical planes. (18 marks)

QUESTION 4

(a) Use the data sheet BS 4500A to determine the working limits for the assembly shown in Fig. Q4a, assuming this to be a designer's layout which has been passed to a detail draughtsman for preparation of the working drawings of the components.

For proper functioning of the assembly with an appropriate fit, the shaft will rotate in the bush and allow sufficient space for lubricant, but not so much as to cause wobbling of the shaft. Also the bush will be pressed into the bracket boss. (13 marks)

(b) By means of sketch, interpret the geometrical tolerances in Fig. Q3b(i-ii). (9 marks)

Scanned by CamScanner

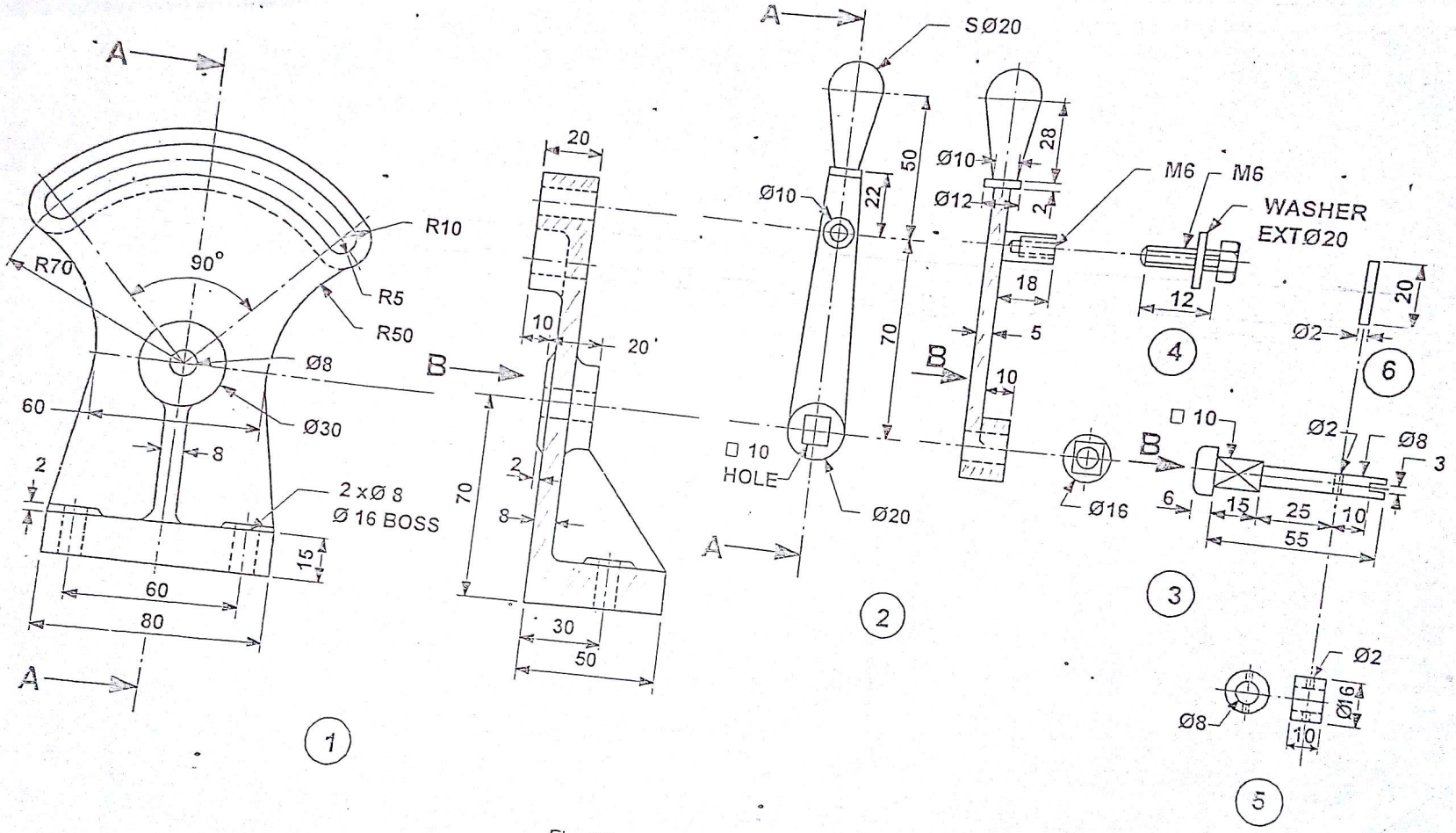

Fig. Q1: Adjusting Unit

Scanned by CamScanner

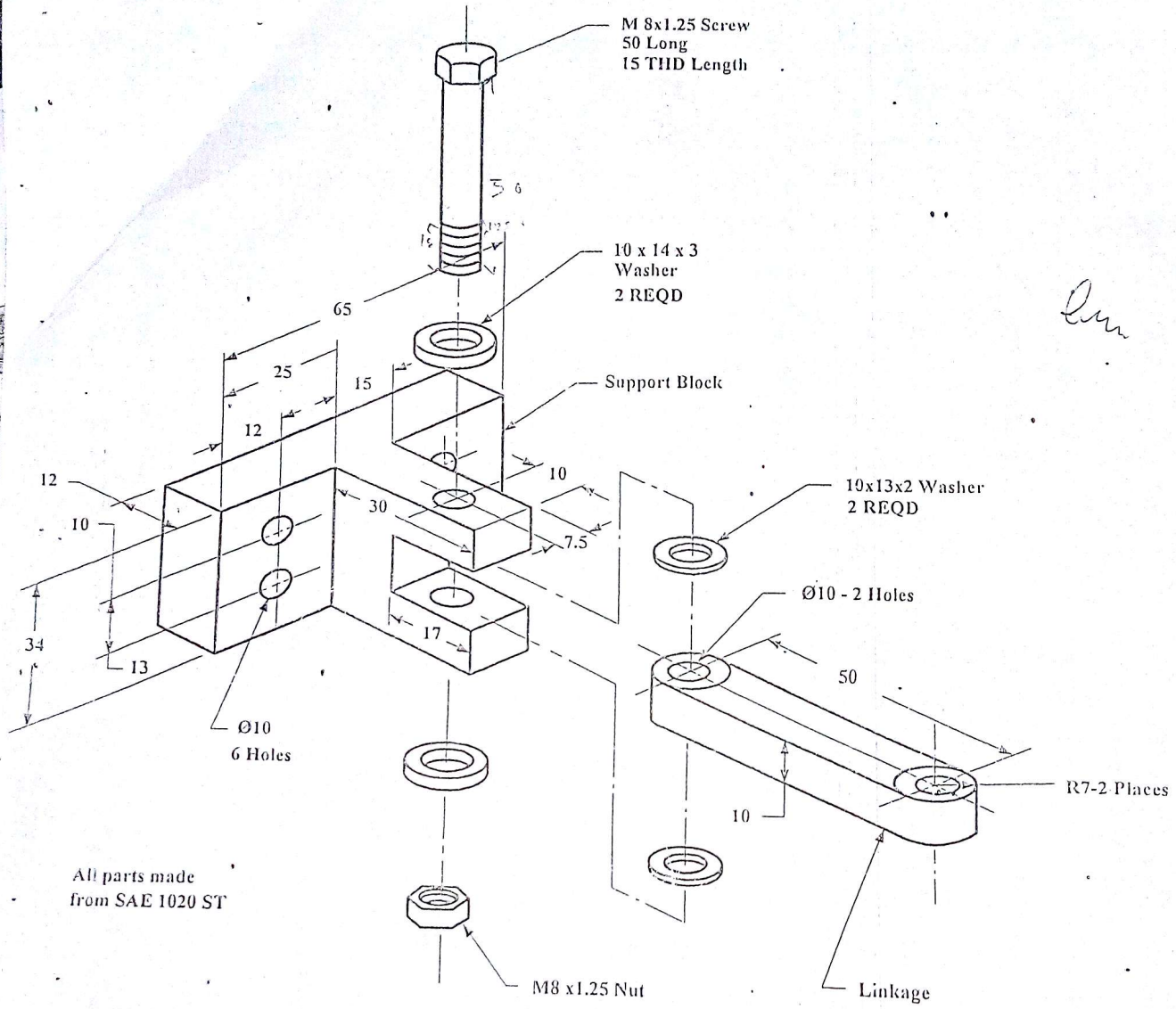

Fig. Q2a: Pivot Assembly

Scanned by CamScanner

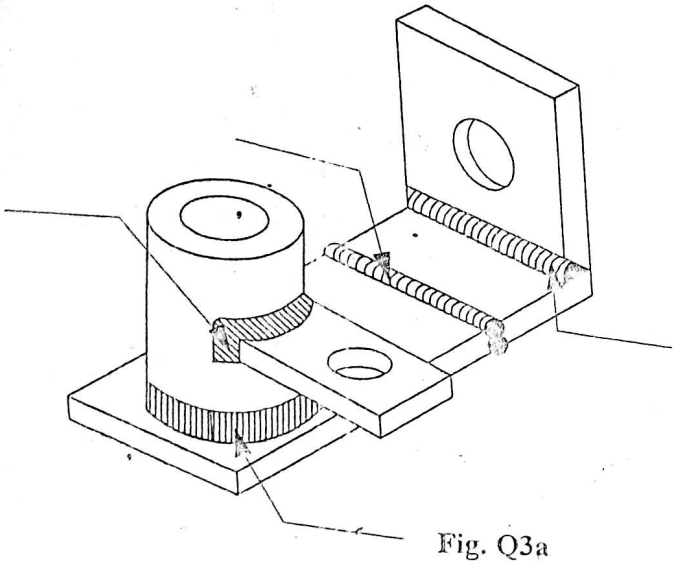

Fig. Q3a

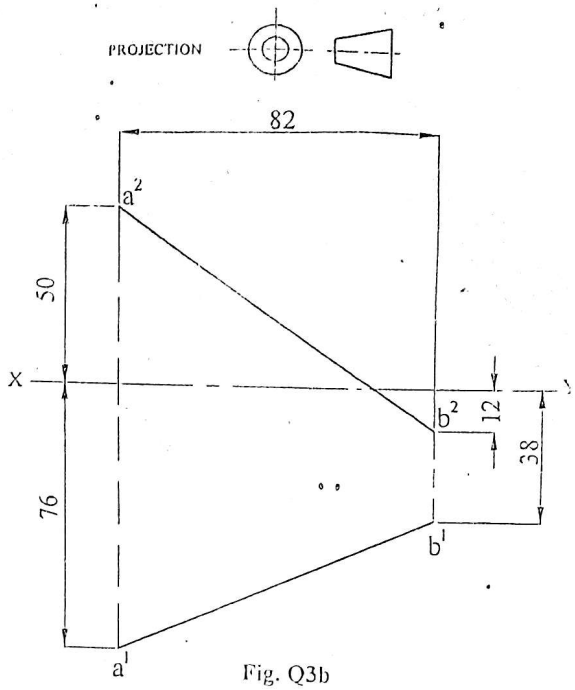

Fig. Q3b

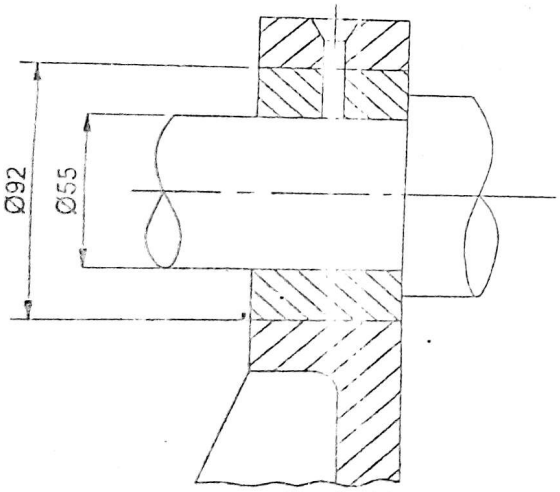

Fig. Q4(a)

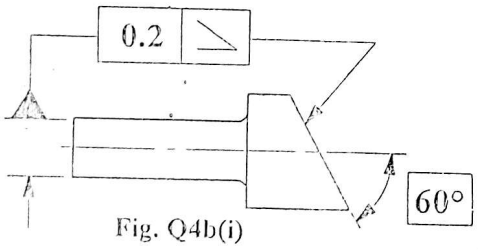

Fig. Q4b(i)

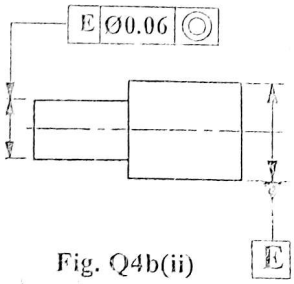

Fig. Q4b(ii)

Gased Monkey

Scanned by CamScanner

UNIVERSITY OF IBADAN
FACULTY OF TECHNOLOGY
DEPARTMENT OF MECHANICAL ENGINEERING
BACHELOR OF SCIENCE DEGREE EXAMINATION
2015/2016 SESSION (FIRST SEMESTER)

Course No.: TME 311
Date: Tuesday, 2 August, 2016

Course Title: Engineering Drawing III
Time: 11:30am - 2:30pm

INSTRUCTION: Answer all Questions. All dimensions are in millimetres, unless otherwise stated. Make sure you write your name, matriculation number and department on the title block. Use version of AutoCAD software that is not lower than AutoCAD 2006.

QUESTION 1

(a) Use the data sheet BS 4500A to determine the working limits for the assembly shown in Fig. Q1a, assuming this to be a designer's layout which has been passed to a detail draughtsman for preparation of the working drawings of the components.
For proper functioning of the assembly with an appropriate fit, the shaft will rotate in the bush and allow sufficient space for lubricant, but not so much as to cause wobbling of the shaft. Also the bush will be pressed into the bracket boss.

(13 marks)

(b) Draw the given views of the lines and determine their traces, true angles of inclination to the horizontal and vertical planes, and true lengths.

(18 marks)

QUESTION 2

(a) Position the conventional weld symbols on the reference lines in Fig. Q2a(i-ii).

(9 marks)

(b) By means of sketch, interpret the geometrical tolerances in Fig. Q2b (i-ii).

(9 marks)

QUESTION 3

The designer's detail layout sketch of a jig used for inspecting shafts is shown in Fig. Q3. Draw full size the following views of the jig:
(a) an exploded view in Fig.Q3 drawn as a 3-D solid model. (16 marks)
(b) a view of 3-D solid model assembly by assembling the exploded view in Question 3(a).

(9 marks)

The jig is to be assembled with a 150 mm length of 20 mm diameter shaft clamped between the jaw and the vee groove in the base. The shaft is to be shown protruding 10mm beyond the right of the base.

QUESTION 4

Fig. Q4 shows five detail parts, which together make up a toolmaker's vice. This consists of a body (1), a moving jaw (2), a bottom plate (3), a screw (4), a special grub screw (5), and two M4 countersunk screws 16 mm long, which are not shown.

Scanned by CamScanner

Draw in First Angle projection the following views of the fully assembled toolmaker's vice:
(a) a sectional front view, taking the screw axis to be a cutting plane;
(b) an end view;
(c) a plan.
Show all hidden detail in views (b) and (c).

(26marks)

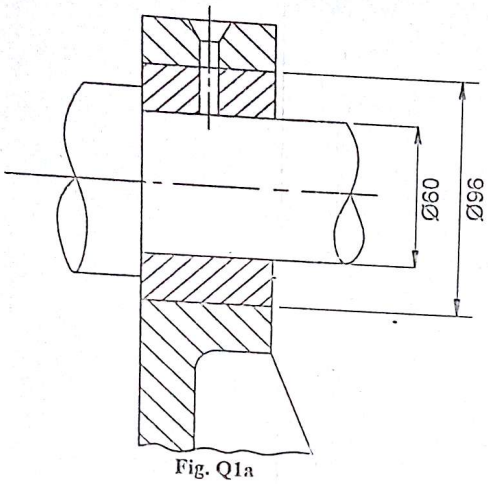

Fig. Q1a

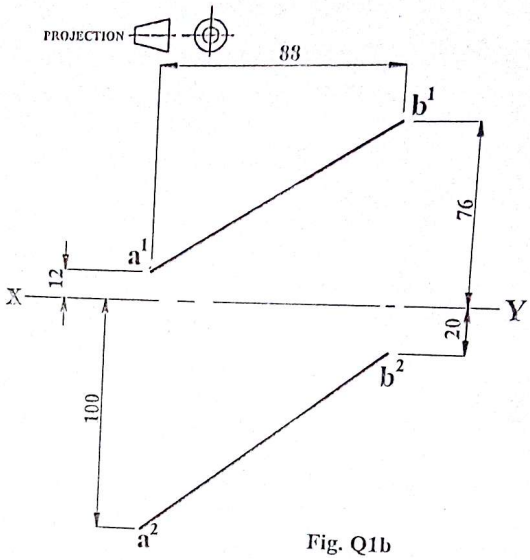

Fig. Q1b

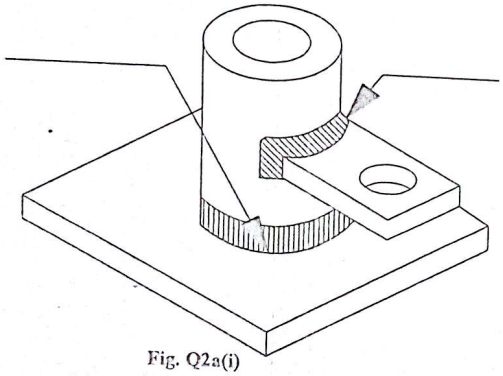

Fig. Q2a(i)

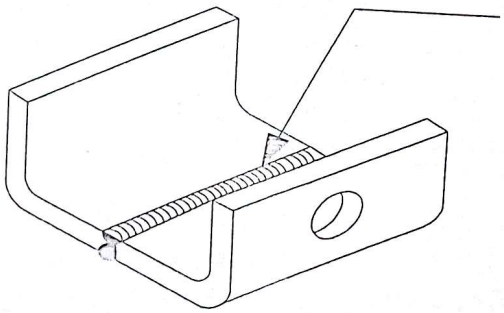

Fig. Q2a(ii)

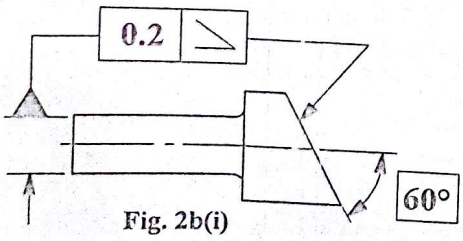

Fig. 2b(i)

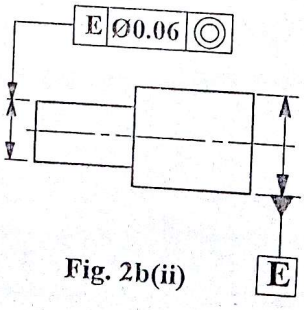

Fig. 2b(ii)

Scanned by CamScanner

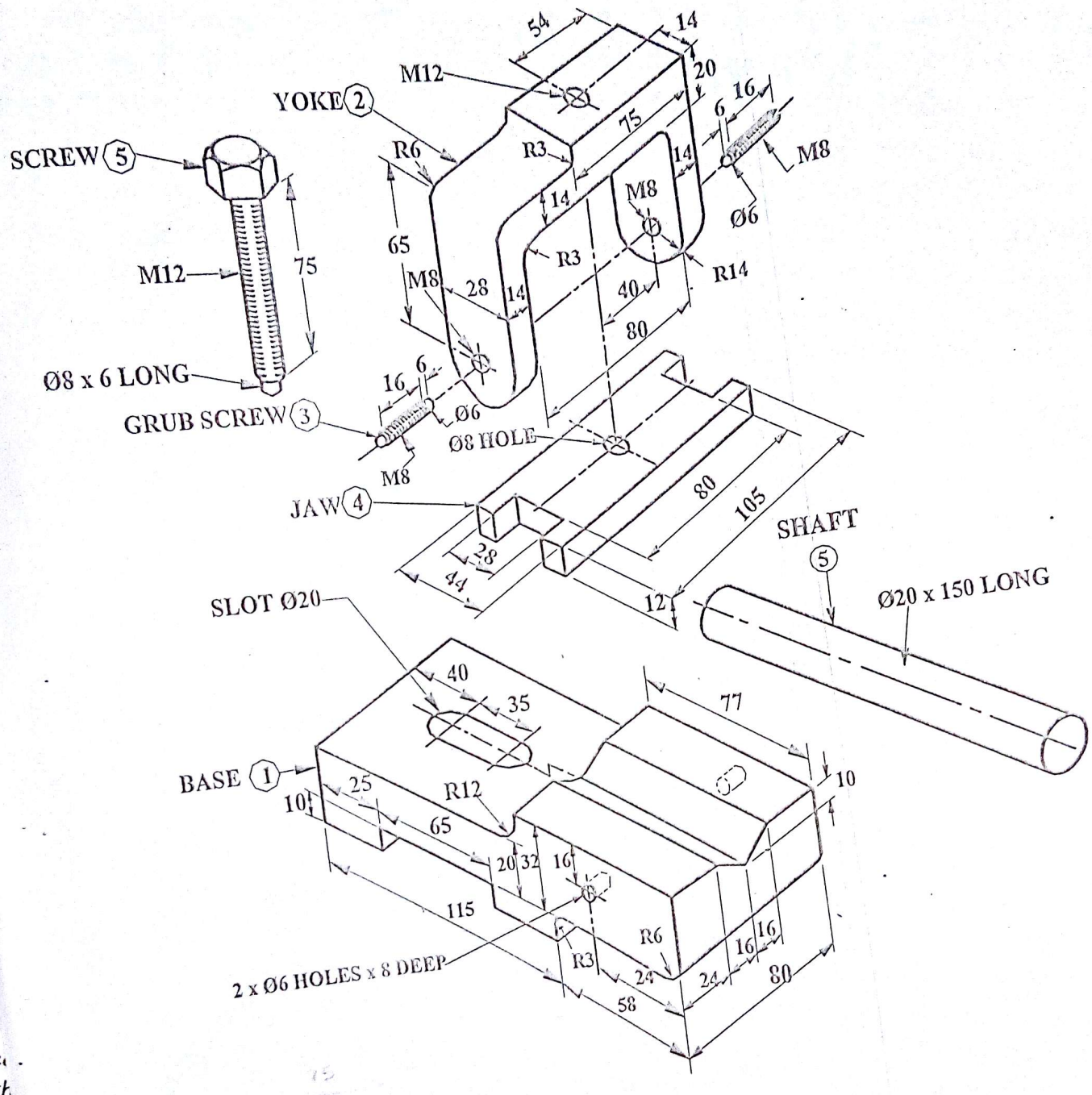

Fig. Q3

Scanned by CamScanner

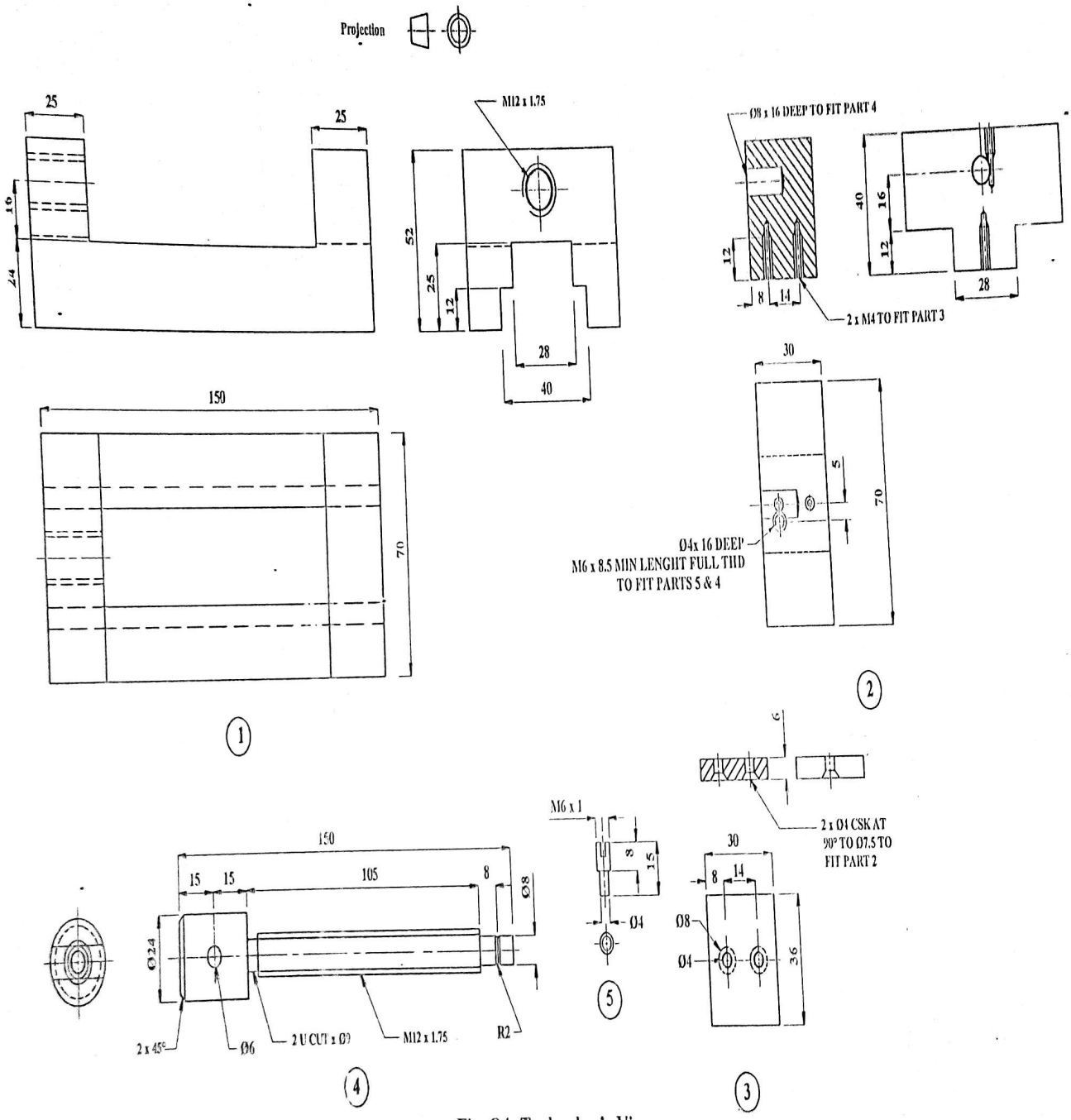

Fig. Q4: Toolmaker's Vice

Scanned by CamScanner

UNIVERSITY OF IBADAN

FACULTY OF TECHNOLOGY

DEPARTMENT OF MECHANICAL ENGINEERING

BACHELOR OF SCIENCE DEGREE EXAMINATION

2016/2017 SESSION (FIRST SEMESTER)

Course No.: TME 313 **Course Title:** Material Science

Date: Saturday, 22 July, 2017 **Hours:** 3 **Time:** 11:30 am - 2:30 pm

INSTRUCTIONS: Answer **Four (4)** Questions only. **Question 1** is compulsory.

Useful Constants
$Charge\ of\ electron, e = 1.6 \times 10^{-19}\ C$, $Mass\ of\ electron,\ m_e = 9.11 \times 10^{-31}\ Kg$
$Mass\ of\ proton,\ m_p = 1.672 \times 10^{-27}\ Kg$, $Mass\ of\ neutron,\ m_n = 1.675 \times 10^{-27}\ Kg$ $Planck's\ Constant, h = 6.626 \times 10^{-34}\ JS$, $Gas\ Constant, R = 8.314\ J/mol$
$Permitivity\ Constant,\ \varepsilon_0 = 8.854 \times 10^{-12}\ C^2/Nm^2$, $Avogadro\ Constant, N_A = 6.023 \times 10^{23}$ atoms/mol
$Boltzman\ Constant, k = 8.62 \times 10^{-5}\ eV/K, \pi = 3.142$

Question 1 (40 Marks): Compulsory

(a) Define Heat treatment and state four benefits of this process.

(b) A glass fibre reinforced plastic contains 90 vol% matrix and 10 vol% fibre. If the moduli of the glass and plastic are 72 GPa and 1.4 GPa respectively, calculate the modulus of elasticity of the composite when loaded longitudinally to the fibres.

(c) As a production engineer, why would welding be a better joining technique than brazing, soldering or bolting?

(d) Briefly, justify why material engineers considered Aluminium and Titanium not effective as sacrificial anodes for the protection of steel pipeline against corrosion even though they are both anodic to steel.

(e) Justify the reason why it is not advisable to fasten an aluminium roof with brass screws.

(f) State **TRUE** or **FALSE** as found appropriate to the statement "*Increase in addition of chromium deteriorates the corrosion resistance of steel*"

(g) State **TRUE** or **FALSE** as found appropriate to the statement "*Increase in addition of phosphorus, lead and sulphur improves machinability of steel*"

(h) State **TRUE** or **FALSE** as found appropriate to the statement "*Improving the surface hardness of steel by diffusing carbon into the surface layer of steel is called Carburizing*"

(i) State **TRUE** or **FALSE** as found appropriate to the statement "*A case hardening process by which individual steel parts have been heat treated and tempered before being heat treated in a furnace containing ammonia is called Nitriding*"

(j) Define with examples (i) Biomaterials (ii) Composites

(k) Define phase diagrams and state its major uses in metallurgy

(l) In concise form, define ***Piezoelectric Material*** and describe its applications in helicopters.

(m) A common metal is known to have a cubic unit cell with an edge length of **0.288 nm**. If this metal has an atomic weight of **52.0 g/mol** and a density of **7.20 g/cm³** ;

(i) Use the above information to deduce the name of the metal crystal structure.

(ii) Calculate the atomic packing factor of this metal.

Scanned by CamScanner

Question 2 (20 Marks)

(a) State Fick's first law of diffusion

(b) The diffusion coefficient for copper atoms in aluminium is found to be $1.28 \times 10^{-22}\ m^2/s$ at $400\ K$ and $5.75 \times 10^{-19}\ m^2/s$ at $500\ K$. Calculate the temperature at which its value is $10^{-16}\ m^2/s$.

(c) The diffusion coefficient of copper in aluminium is higher than that of aluminium in copper at a given temperature. Give <u>two</u> reasons why this is so.

(d) Explain in a concise form why the activation energy of diffusion of carbon in γ-Fe (FCC) is much higher than that of carbon in α-Fe (BCC).

(e) List any eight forms of corrosion

(f) From perspective of the effect of composition and structure on material properties (**Steels as a case study**), state <u>two examples each</u> of alloying elements that are:

(i) Ferrite promoters (ii) Austenite stabilizers

Question 3 (20 Marks)

(a) The true stresses of 400 MPa and 500 MPa produced true plastic strains of 0.18 and 0.27 in a given material. Determine the true stress corresponding to a true plastic strain of 0.24.

(b) State Fick's second law of diffusion

(c) When low alloy steel is exposed to a carburizing atmosphere; the carbon concentration increased to 0.25 wt% at a point 1.0 mm from the surface in 12 hours. How long will it take to achieve the same carbon concentration at a point 3.0 mm from the surface for the same steel at the same temperature?

(d) State any six prevention and control measures for protection of engineering structures against corrosion.

(e) Define creep and state its three main stages.

(f) Concisely, describe a phenomenon called age-hardening or precipitation hardening.

Question 4 (20 Marks)

(a) Calculate the ratio of self-intertitials to vacancies present in pure copper near its melting temperature of 1083°C. The energies of formation for vacancies and intertitials in copper are 1.0 eV and 3.0 eV respectively. Give the reason why self-intertitials are generally less abundant than vacancies.

(b) Define the following invariant reactions in the Iron-Carbon diagram and support with relevant equations.

(i) Peritectic reaction (ii) Eutectic reaction (iii) Eutectoid reaction

Scanned by CamScanner

(c) In an X-ray powder camera using incident copper radiation of wavelength 1.5418 Å, a diffraction line is produced at 2θ = 45.8°. Determine the:

(i) Interplanar spacing of the planes which produce the diffraction line.

(ii) Miller indices for the reflecting planes if a = 3.44 Å

(d) Carbon steel with a grain size of 28 μm has yield strength of 320 MPa. When the grain size is reduced through thermomechanical processing to 20 μm, the yield strength is 350 MPa. Using Hall-Petch equation, determine the yield strength for a steel of grain size 40 μm.

(e) What is a lever rule? If W_α and W_L are the weight fractions of α and liquid respectively. Derive the basic equations required for determination of weight fractions of phases present in a two-phase field at any particular temperature.

(f) A cylindrical specimen fabricated from a low carbon nickel is 600 mm and 20 mm in diameter has a tensile stress of 41 MPa. With the elongation of 6 mm after 200 days at 538°C, calculate creep rate (Assume the instantaneous and primary creep elongation are negligible).

Question 5 (20Marks)

(a) Show that the steady state form of Schrödinger's equation is given by;

$$\nabla^2\varphi + \frac{8\pi^2 m}{h^2}(E - V)\varphi = 0$$

(b) State Heisenberg Uncertainty principle and illustrate with equations.

(c) In accordance to Pauli's exclusion principle, describe the four quantum numbers status of each of the outermost electrons in Oxygen atom.

(d) Define 'Superalloys" and give four examples.

(e) What is the wavelength in picometres associated with an electron, whose mass is 9.11×10^{-31} kg, traveling at a speed of 4.19×10^{-6} m/s?

(f) The interaction energy between Na^+ and Cl^- ions in the NaCl crystal can be written as

$$E(r) = [(-4.03 \times 10^{-28} / r) + (6.97 \times 10^{-96} / r^8)]$$

Where the energy is given in joules per ion pair and the interionic separation r is in meters

(i) Calculate the binding energy and equilibrium separation between Na^+ and Cl^- ions.

(ii) Also estimate the elastic modulus of Y of NaCl given that;

$$Y = (1/6r_0)\,[d^2E/dr^2]_{r=r_0}$$

Scanned by CamScanner

Question 6 (20 Marks)

(a) What is a phase in a microstructure of material?

(b) Considering the geometry and the position of atoms in **SC**, **FCC** and **BCC** crystal structures, obtain the value of the lattice parameter '**a**' for **SC**, **FCC** and **BCC** in terms of the atomic radius **R**. Hence, calculate the Atomic Packing Factor for **SC**, **FCC** and **BCC** structures. [Provide a neat sketch of the unit cells].

(c) Zinc has lattice parameters **a** and **c** as **2.66 Å** and **4.95 Å** respectively. Calculate the packing fraction of Zinc given that its atomic radius is **1.31 Å**.

(d) Define the following terms

i. Coordinating number ii. Atomic Packing Factor iii. Linear density

iv. Planar density v. Polycrystalline materials vi. Anisotropy

vii Polymorphism viii. Isotropy

(e) Define the following terms

(i) Eutectoid steel (ii) Hypoeutectoid steel (iii) Hypereutectoid steel

(f) The atomic weight, density and atomic radius for three hypothetical alloys are given in table Q6f. For each, determine whether its crystal structure is FCC, BCC or Simple Cubic.

Table Q6f: Properties Data for Hypothetical Alloy materials

Alloy	Atomic Weight (g/mol)	Density (g/cm^3)	Atomic Radius (nm)
A	43.1	6.40	0.122
B	184.4	12.30	0.146
C	91.6	9.60	0.137

Scanned by CamScanner

UNIVERSITY OF IBADAN
FACULTY OF TECHNOLOGY
DEPARTMENT OF MECHANICAL ENGINEERING
BACHELOR OF SCIENCE DEGREE EXAMINATION
2016/2017 SESSION (FIRST SEMESTER)

Course No.: TME 311 **Course Title:** Engineering Drawing III
Date: Wednesday, 26 July, 2017 **Hours:** 3 **Time:** 11:30 am - 2:30 pm

INSTRUCTION: Answer **all Questions**. All dimensions are in millimetres, unless otherwise stated. Make sure you write your name, matriculation number and department on the title block. Use version of AutoCAD software that is not lower than AutoCAD 2010.

Question 1

(a) Redraw the exploded view in **Fig. Q1a** as a 3-D solid model. **(17 marks)**
(b) Assemble the exploded view in **Question 1(a)** to obtain a 3-D solid model assembly. **(9 marks)**

Question 2

(a) By means of sketch, interpret the geometrical tolerances in **Fig. Q2a (i-ii)**. **(7 marks)**
(b) Indicate the correct welding symbols on component in **Fig. Q2b** using the arrows. **(10 marks)**

Question 3

(a) Use the data sheet **BS 4500A** to determine the working limits for the assembly shown in **Fig. Q3a**, assuming this to be a designer's layout which has been passed to a detail draughtsman for preparation of the working drawings of the components. For proper functioning of the assembly with an appropriate fit, the shaft will rotate in the bush and allow sufficient space for lubricant, but not so much as to cause wobbling of the shaft. Also the bush will be pressed into the bracket boss. (15 Marks)

(b) Draw the given views of the lines in **Fig. Q3b** and determine their traces, true angles of inclination to the horizontal and vertical planes, and true lengths. **(16 marks)**

Question 4

The component parts of a tailstock are shown in **Fig. Q4**. They consist of a body (1); a barrel (2); a cap (3); a spindle (4); a handwheel (5); a centre (6); a key (7); an M10 hexagon-head screw, 50 mm long with 20 mm minimum length of full thread to fit part (1); and an M10 nut, 8 mm high with a 2 mm thick washer to fit part (4). With all the parts correctly assembled, draw the following views:
(a) Sectional front view on AA; and **(15 marks)**
(b) An end view. **(11 marks)**

Scanned by CamScanner

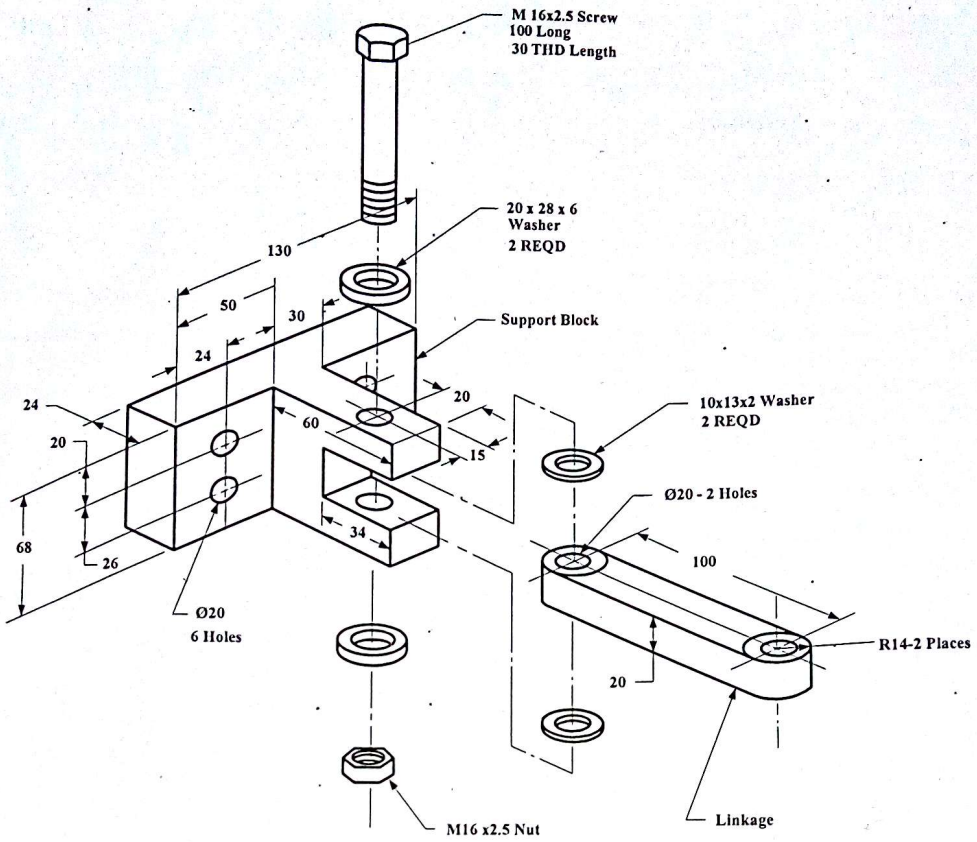

Fig. 1a

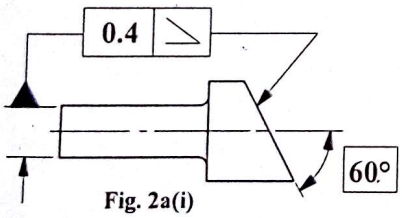

Fig. 2a(i)

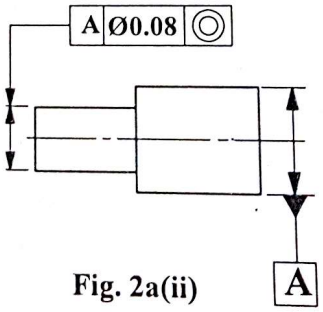

Fig. 2a(ii)

Fig. Q2a

Scanned by CamScanner

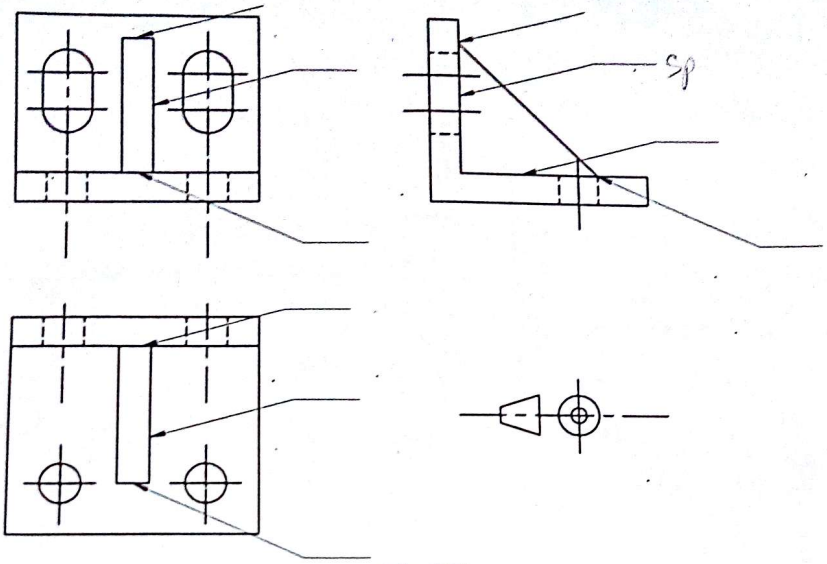

Fig. Q2b

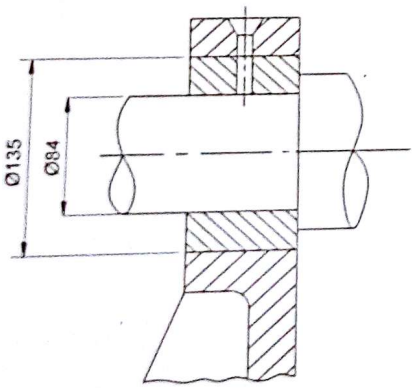

Fig. Q3a

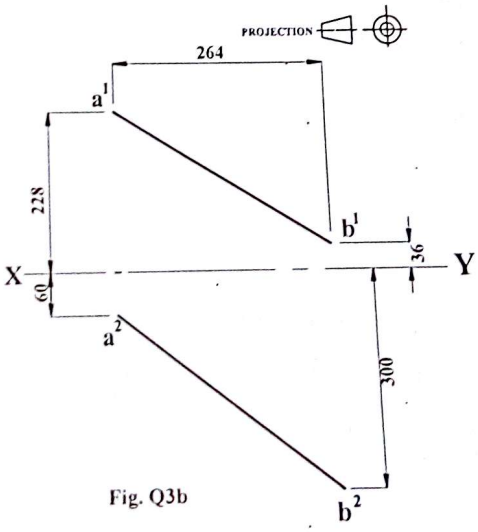

Fig. Q3b

Scanned by CamScanner

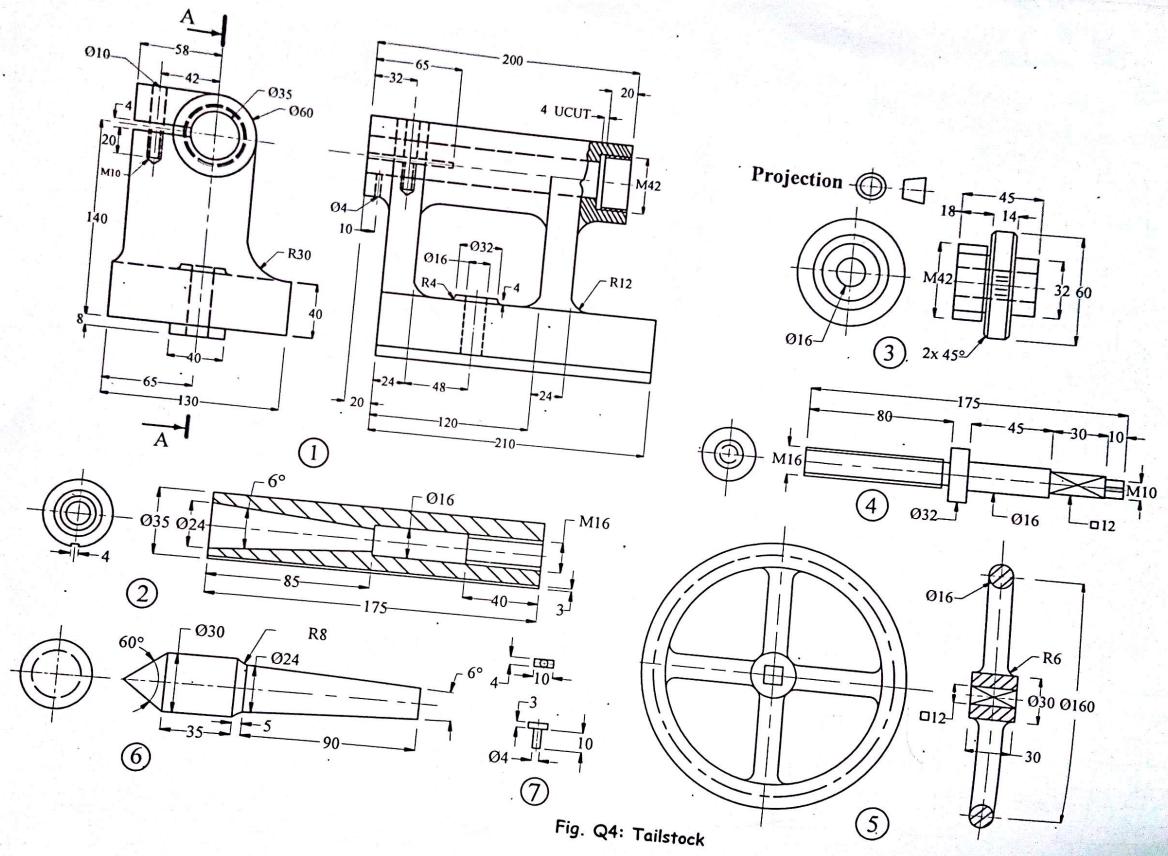

Fig. Q4: Tailstock

Scanned by CamScanner

Extracted from BS 4500 : 1969

BRITISH STANDARD

SELECTED ISO FITS—HOLE BASIS

Data Sheet
4500A
Issue 1. February 1970
confirmed August 1985

Diagram to scale for 25 mm diameter

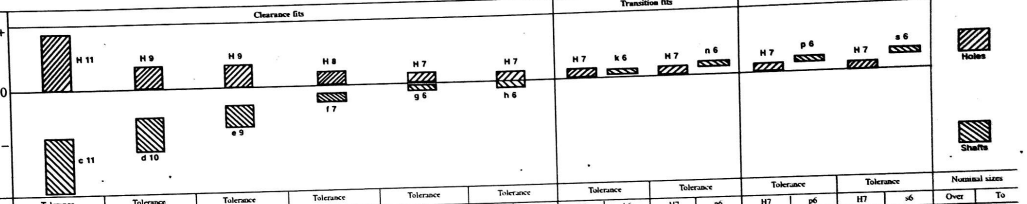

Nominal sizes Over mm	To mm	Tolerance H11 0.001 mm	Tolerance c11 0.001 mm	Tolerance H9 0.001 mm	Tolerance d10 0.001 mm	Tolerance H9 0.001 mm	Tolerance e9 0.001 mm	Tolerance H8 0.001 mm	Tolerance f7 0.001 mm	Tolerance H7 0.001 mm	Tolerance g6 0.001 mm	Tolerance H7 0.001 mm	Tolerance h6 0.001 mm	Tolerance H7 0.001 mm	Tolerance k6 0.001 mm	Tolerance H7 0.001 mm	Tolerance n6 0.001 mm	Tolerance H7 0.001 mm	Tolerance p6 0.001 mm	Tolerance H7 0.001 mm	Tolerance s6 0.001 mm	Nominal sizes Over mm	To mm
—	3	+60 0	−60 −120	+25 0	−20 −60	+25 0	−14 −39	+14 0	−6 −16	+10 0	−2 −8	+10 0	−6 0	+10 0	+6 +0	+10 0	+10 +4	+10 0	+12 +6	+10 0	+20 +14	—	3
3	6	+75 0	−70 −145	+30 0	−30 −78	+30 0	−20 −50	+18 0	−10 −28	+12 0	−4 −12	+12 0	−8 0	+12 0	+9 +1	+12 0	+16 +8	+12 0	+20 +12	+12 0	+27 +19	3	6
6	10	+90 0	−80 −170	+36 0	−40 −98	+36 0	−25 −61	+22 0	−13 −28	+15 0	−5 −14	+15 0	−9 0	+15 0	+10 +1	+15 0	+19 +10	+15 0	+24 +15	+15 0	+32 +23	6	10
10	18	+110 0	−95 −205	+43 0	−50 −120	+43 0	−32 −75	+27 0	−16 −34	+18 0	−6 −17	+18 0	−11 0	+18 0	+12 +1	+18 0	+23 +12	+18 0	+29 +18	+18 0	+39 +28	10	18
18	30	+130 0	−110 −240	+52 0	−65 −149	+52 0	−40 −92	+33 0	−20 −41	+21 0	−7 −20	+21 0	−13 0	+21 0	+15 +2	+21 0	+28 +15	+21 0	+35 +22	+21 0	+48 +35	18	30
30	40	+160 0	−120 −280	+62 0	−80 −180	+62 0	−50 −112	+39 0	−25 −50	+25 0	−9 −25	+25 0	−16 0	+25 0	+18 +2	+25 0	+33 +17	+25 0	+42 +26	+25 0	+59 +43	30	40
40	50	+160 0	−130 −290																			40	50
50	65	+190 0	−140 −330	+74 0	−100 −220	−74 0	−60 −134	+46 0	−30 −60	+30 0	−10 −29	+30 0	−19 0	+30 0	+21 +2	+30 0	+39 +20	+30 0	+51 +32	+30 0	+72 +53	50	65
65	80	+190 0	−150 −340																	+30 0	+78 +59	65	80
80	100	+220 0	−170 −390	+87 +0	−120 −260	−87 −0	−72 −159	+54 0	−36 −71	+35 0	−12 −34	+35 0	−22 0	+35 0	+25 +3	+35 0	+45 +23	+35 0	+59 +37	+35 0	+93 +71	80	100
100	120	+220 0	−180 −400																	+35 +0	+101 +79	100	120
120	140	+250 0	−200 −450	+100 0	145 305	+100 0	−84 −185	+63 0	−43 −83	−40 0	−14 −39	+40 0	−25 0	+40 0	+28 +3	+40 0	+52 +27	−40 0	+68 +43	+40 0	+117 +92	120	140
140	160	+250 0	−210 −460																	+40 0	+125 +100	140	160
160	180	+250 0	−230 −480																	+40 0	+133 +108	160	180
180	200	+290 0	−240 530	+115 0	−170 −355	+115 0	−100 −215	+72 0	−50 −96	+46 0	−15 −44	+46 0	−29 0	+46 0	+33 +4	+46 0	+60 +31	+46 0	+79 +50	+46 0	+151 +122	180	200
200	225	+290 0	260 550																	+46 0	+159 +130	200	225
225	250	+290 0	280 570																	+46 0	+169 +140	225	250
250	280	+320 0	300 630	+130 0	−190 −400	+130 0	−110 −240	+81 0	−56 −108	+52 0	−17 −49	+52 0	+32 0	+52 0	−36 +4	+52 0	+66 +34	+52 0	+88 +56	+52 0	+190 +158	250	280
280	315	+320 0	330 650																	+52 0	+202 +170	280	315
315	355	+360 0	360 −720	+140 0	−210 −440	+140 0	−125 −265	+89 0	−62 −119	+57 0	−18 −54	+57 0	−36 0	+57 0	+40 +4	+57 0	+73 +37	+57 0	+98 +62	+57 0	+226 +190	315	355
355	400	+360 0	400 760																	+57 0	+244 +208	355	400
400	450	+400 0	440 840	+155 0	−230 −480	+155 0	−135 −290	+97 0	−68 −131	+63 0	−20 −60	+63 0	−40 0	+63 0	+45 +5	+63 0	+80 +40	+63 0	+108 +68	+63 0	+272 +232	400	450
450	500	+400 0	480 880																	+63 0	+292 +252	450	500

BRITISH STANDARDS INSTITUTION, 2 Park Street, London, W1A 2BS
SBN: 580 05766 6

Scanned by CamScanner

FACULTY OF TECHNOLOGY

DEPARTMENT OF MECHANICAL ENGINEERING

BACHELOR OF SCIENCE DEGREE EXAMINATION (FIRST SEMESTER)

QUIZ 2

Course No: TME 312 Title: WORKSHOP PRACTICE II

Date: 29/06/2016 Hour(s): $\frac{3}{4}$ Time: 2.00 - 2.45 pm

Question No.1

(i) When is welding required in joining processes? (2 marks)

(ii) Mention two (2) types of flame that can be obtained in oxyacetylene welding. (2 marks)

(iii)Mention two (2) safety precautions in a mechanical welding workshop.(2 marks)

(iv) State and describe two (2) equipment that are employed in industry or standard workshop. (2 marks)

(v) A galvanized low carbon steel storage cistern has a nominal capacity of 3,000 litres and base measurement of 1.0 m by 2.0 m. What is the depth of the vessel? (2 marks)

Question No.2

(i) In vapour compression system, state four fundamental processes that are completed in one cycle.(2 marks)

(ii) Differentiate between ceiling fan and table fan.(2marks)

(iii)What do you understand by : (a) Gating, (b) Cavity (2 marks)

(iv) Describe, briefly, Kiln drying and natural seasoning (2 marks)

(v) What is the function of coolant in machine operation? .(2 marks)

Scanned by CamScanner

UNIVERSITY OF IBADAN
FACULTY OF TECHNOLOGY

DEPARTMENT OF AGRICULTURAL AND ENVIRONMENTAL ENGINEERING

B.Sc. Degree Examination

First Semester, 2016/2017 Session

TAE 312: Agricultural Processing and Storage I
(3 Units)

Instructions

1. Answer ALL questions in Part A and any other ONE in Part B.
2. Use charts as provided where necessary

Time Allowed: 3 Hours

© UI/FT//TAE/2017

AKA

Scanned by CamScanner

PART A

Question ONE

a. Briefly discuss the following:
   i. Grading, ii. Sorting, iii. Scalping, iv. Screening, v. Cleaning

b. i. From the first principles, derive the equation for the efficiency of a screen.

   ii. Wheat was milled in a burr mill. The ground product was later on analysed in a set of IS screens. The screen analysis is given in the Table 1:

Table 1: Screen Analysis for Milled Wheat

IS Screen	Width of Opening (mm)	% Material Retained over each sieve		
		Feed	Overflow	Underflow
100	1.000	-	-	-
70	0.708	2	9.8	-
50	0.500	14	51.7	3.0
40	0.420	27	19.0	9.0
30	0.296	32	15.0	49.0
20	0.211	18	3.5	23.2
15	0.116	4	1.0	7.8
Pan	-	3	-	8.0

Calculate the screen effectiveness of:
   i. IS 30; ii. IS 40 and iii. IS 50

Reciprocating Screen
Rotary Screen
Vibratory Screen

b. Discuss the various classifications of screen openings

25 marks

Question TWO

a. Briefly discuss the following:
   i. Hammer Mill
   ii. Plate Mill Burr
   iii. Roller Mill

Hammer Mill
Pla

b. i. List and explain how some crop variables affect design of a mill.
   ii. Discuss with the aid of diagram where applicable the various feed mechanism of a mill

$$E_T = \frac{M_o(M_u - M_g)}{M_g(M_u - M_o)} \times \frac{M_g - M_o(1 - M_u)}{M_u - M_o(1 - M_g)}$$

c. Sorghum (
analysed b
Table 2:
Table 2:

IS Screen
100
70
50
40
30
20
15
Pan

Determine the

a. Explai
   i.
   ii.
   iii.
   iv.
   v.

b. i.
   ii.
   iii.

c. A bin
This g
   i.
   ii.

Scanned by CamScanner

c. Sorghum (3.80 mm size) was milled by a plate mill. The flour was analysed by IS sieves for particle size determination as shown in the Table 2:

Table 2:

IS Screen NO.	Mass fraction of flour retained over sieve (g)	
	I-setting	II-setting
100	-	-
70	10.1	1.5
50	16.7	13.3
40	36.0	36.1
30	83.2	74.8
20	96.0	104.6
15	8.0	8.4
Pan	0.0	11.3

Determine the flour size in each of the two settings

25 marks

Question THREE

a. Explain the following terms
   i. Thin Layer Drying
   ii. Deep Bed Drying
   iii. Equilibrium Moisture Content
   iv. Moisture Content Wet Basis
   v. Moisture Content Dry Basis

b. i. Derive from first principle the thin layer drying equation
   ii. State and briefly explain the factors that affect the rate of drying
   iii. Explain the principles of "GREEN HOUSE EFFECT" in solar drying

c. A bin holds 2000kg of wet grain containing 500kg of water. This grain is to be dried to a final moisture content of 14% (wb)
   i. What are the initial and final moisture content of the grain (wet basis and dry basis)
   ii. How much water is removed during drying?

25 marks

Scanned by CamScanner

UNIVERSITY OF IBADAN
FACULTY OF TECHNOLOGY

PART B

Question FOUR

a. Briefly discuss the following:
   i. Expression
   ii. Extraction
   iii. Solvent
   iv. Solute
   v. Holding Time in Extraction

b. i. State the factors that influence the juice yield from an expression process
   ii. Briefly describe the screw expeller used in oil expression

15 marks

Question FIVE

a. Define the following terms:
   i. Wet Bulb Temperature
   ii. Dry Bulb Temperature
   iii. Absolute Humidity
   iv. Dew Point Temperature
   v. Relative Humidity

b. i. Briefly describe the Adiabatic Condition
   ii. Air-vapour mixture is at 60°C dry bulb temperature and 35°C wet bulb temperature. Using the psychometric chart, determine the:
   Relative Humidity
   Humidity Ratio
   Specific Volume
   Enthalpy
   Dew Point Temperature

c. Heated air at 50°C and 10% relative humidity is used to dry rice in a bin dryer. The air exits the bin under saturated condition. Determine the amount of water removed per kg of dry air.

15 marks

Scanned by CamScanner

UNIVERSITY OF IBADAN
FACULTY OF TECHNOLOGY

DEPARTMENT OF AGRICULTURAL AND ENVIRONMENTAL ENGINEERING

B.Sc. Degree Examination

First Semester, 2015/2016 Session

TAE 313: FARM POWER AND MAINTAINANCE I
(3 units)

INSTRUCTIONS:

1. Answer all the questions in Section A and any two in Section B.
2. This examination carries 75% of the total marks while continuous assessment is 25%

Time Allowed: 2 Hours

© UI/FT//TAE/2016

Scanned by CamScanner

SECTION A

1. State five types of tractors based on steering method, arrangement of frame and traction method.
2. Give two examples each of the following implements;
   I. Trailed
   II. Semi-mounted
   III. Mounted
3. What is the instrument used in measuring the drawbar power required to pull an implement in the field? Give the three commonly available types.
4. What are the minor forces acting on a tractor in a dynamic condition which are not usually calculated?
5. State the four factors affecting the reaction of soils to forces applied by tillage tools.
6. Give the characteristics curve showing the effect of moisture content on the apparent coefficient of friction between soils engaging implements.
7. State five basic operations that are important in the design of soil engaging implements.
8. What is the importance of understanding the statistics and dynamics of farm tractor?
9. State the differential equations of motion for a typical traction.
10. State the factors affecting the critical angle of dynamic stability of a tractor.
11. What is the use of a tractor hydraulic system in a tractor?

A. Define weight tra
the formula in esti
B. How are tillage im
C. What are the force

A. Discuss the two ba
design of soil engag
B. What governs the fo
C. How is a typical trac

Q
A. While testing a two b
the following observa
I. Total draf
II. Distance m
50m
III. Time taken
Calculate the d
forward speed i
B. With the aid of neat ske
forces are affected in a
C. In the analysis of tracto
assumptions made in th

Scanned by CamScanner

method, arrangement of

plements;

e drawbar power
ive the three commonly

in a dynamic condition

f soils to forces applied

ffect of moisture content
en soils engaging

t in the design of soil

statistics and dynamics

r a typical traction.
of dynamic stability of a

n in a tractor?

SECTION B

QUESTION ONE

A. Define weight transfer in a tractor implement system and derive the formula in estimating it.
B. How are tillage implements maintained?
C. What are the forces acting on a tractor at rest?

QUESTION TWO

A. Discuss the two basic types of soil failure pattern related to the design of soil engaging implements.
B. What governs the forward translation motion of the tractor?
C. How is a typical tractor hydraulics system maintained?

QUESTION THREE

A. While testing a two bottom tractor drawn mould board plough, the following observations were noted:
   I. Total draft recorded = 1500kg
   II. Distance moved by the tractor while ploughing = 50m
   III. Time taken to move the distance by the tractor = 50s

   Calculate the drawbar horsepower developed and the forward speed in km/hr.

B. With the aid of neat sketches, show how the basic horizontal forces are affected in a typical tractor implement hitch.
C. In the analysis of tractor mechanics, state the simplifying assumptions made in the case of a rear-wheel driven tractor.

Scanned by CamScanner

UNIVERSITY OF IBADAN
FACULTY OF TECHNOLOGY

DEPARTMENT OF AGRICULTURAL AND ENVIRONMENTAL ENGINEERING

B.Sc. Degree Examination
First Semester, 2016/2017 Session

July 2017

TAE 310: Introduction to Farm Buildings and Structures
(3 Units)

Time Allowed: 3Hours

Instructions

1. This examination is in two sections, A and B. Section A is contained in a separate sheet to be answered and submitted while Section B is contained in this sheet.

2. Candidates are to answer all the questions in Section A **AND** Question 1 and any other two from Section B.

3. Section A carries 20 marks; Section B 50 marks while the remaining 30 marks are allocated to Continuous Assessment.

© TAE 2017

YM

Scanned by CamScanner

how may tonnes makes 1 m^3

$\rho = \frac{m}{V}$ $\rho \times V$

$m = \rho V$

Question One (20 marks)

Calculate the amount of cement, sand, gravel and water that will be required to construct a concrete platform which when it is finally dried will have a length of 20m, a width of 7.5m and a thickness of 50cm.

The concrete mix ratio to be used is 1: 2: 3 by volume. One bag of cement will require 200 litres of water.
The densities of cement, sand, and gravel are 1,450, 1,700 and 6,186kg/m^3 respectively. A 50kg bag of cement occupies a volume of 40 litres

Assume a 25.0 % decrease in volume and 4.0 % wastage of materials to be provided for the construction.

Q1 Volume II

Topography
Source of Water Supply
Accessibility
Soil fertility

$$V_m = \frac{(100 + p + s)}{100} \times V_c$$

$$\text{Quantity of Cement} = \frac{x}{(x+y+z)} \times V_m$$

$$\text{Quantity of Sand} = \frac{y}{(x+y+z)} \times V_m$$

$$\text{Quantity of Gravel} = \frac{z}{(x+y+z)} \times V_m$$

Type and function of the building
Availability of water
Availability of Alternative materials

where
x, y and z refer to mix ratios
V_m = sum of the volumes of cement, sand and gravel
V_c = volume of dried concrete
P = % by which the sum of the volumes of the components exceeds the volume of the final concrete
S = % allowed for waste and spill

.a) If 1m^3 of mai
the volume of ma
assuming that the

b) Calculate the v
and height} of the
give 15 tonnes of

a) Discuss four f
appropriate locati
emphasize the spe
various ways by v

b) Briefly discuss
the layout of a far

a) There is alway
construction in ar
will depend on ap
factors that may g

b) Discuss two ad
and wood product

Advantage
Ease of work
Availability

Scanned by CamScanner

Question Two (15 marks)

.a) If $1m^3$ of maize on cob will give $0.4m^3$ of grain when shelled, calculate the volume of maize on cobs that will give 10 tonnes of shelled maize grain assuming that the density of shelled corn is $720kg/m^3$. **{5 marks}**

b) Calculate the volume of a crib and the possible dimensions {length, width and height} of the crib that will be required to store the maize on cob that will give 15 tonnes of grains when shelled. **{10 marks}**

Question Three (15 Marks)

a) Discuss four factors that should be taken into account in selecting an appropriate location for an agricultural enterprise. Your discussion should emphasize the special reasons why such a factor should be considered and the various ways by which it can be achieved. **{10 marks}**

b) Briefly discuss the two of the many objectives that should be aimed at in the layout of a farmstead. **{5 marks}** The size and structure of the farm Residential or Non-Residential farm

Question Four (15 Marks)

a) There is always a catalogue from which materials could be selected for construction in any environment and situation but the success of the project will depend on appropriate selection of construction materials. Discuss three factors that may guide you in selecting materials of construction. **{9 marks}**

b) Discuss two advantages and one disadvantage associated with using wood and wood products as building material for farm structures. **{6 marks)**

Advantages
Ease of workability
Availability.

Disadvantages
Prone to fire hazards
Termites attack.

Scanned by CamScanner

UNIVERSITY OF IBADAN
FACULTY OF TECHNOLOGY

-adh = k

DEPARTMENT OF AGRICULTURAL AND ENVIRONMENTAL ENGINEERING

B. Sc. Degree Examination

First Semester, 2016/2017 Session

July 2017

TAE 315: SOIL MECHANICS
(3 Units)

Time Allowed: 3 hours

Instructions: **Attempt Any FOUR Questions.**

445

©UITAE 2016/17

TAE

Scanned by CamScanner

QUESTION ONE (15 marks)

1a. Define the following

I. Liquid limit

II. Plastic limit

III. Shrinkage limit **(3marks)**

1b. The natural moisture content of an excavated soil is 24%. Its liquid limit is 62% and plastic limit is 28%. Percentage of particles less than 0.002mm is 23%. Determine:

I. Plasticity index

II. Liquidity index

III. Consistency index **(3marks)**

1c. A constant head permeability test was carried out on a sample of sand. The diameter and length of the sample were 10cm and 20cm respectively. The head of water was maintained at 35cm. If 110cm^3 of water is collected in 80s, compute the hydraulic conductivity of the sand in m/day. If the same sample of sand with a height and diameter of 10cm and 9cm respectively was transferred to a falling head permeameter; the cross-sectional area of the stand pipe was 1.25cm^2. Calculate the time it will take for the head to fall from 60cm to the 30cm mark in the standpipe? **(9marks)**

QUESTION TWO (15 marks)

2a. Using appropriate diagram and terminologies; derive and describe the expression for the field determination of permeability of soils in an unconfined aquifer. **(9marks)**

2b. A pumping well test was made in sands extending to a depth of 15m where an impermeable stratum was encountered. The initial ground-water level was at the ground surface. Observation wells were sited at distances 3 and 7.5m from the pumping well. A

Scanned by CamScanner

steady state was established at about 20hrs where the discharge was 3.8litres/sec. The drawdowns at the two observation wells were 1.5m and 0.35m. Calculate the coefficient of permeability? **(4marks)**

2c. What is soil permeability? Mention two factors that affect permeability of soils? **(2marks)**

QUESTION THREE (15 marks)

3a. With the aid of a diagram, explain the term soil phase relationship? **(3marks)**

3b. A soil has a bulk density of 1.91g/cm3 and a water content of 9.5%. The value of specific gravity (Gs) is 2.70. Calculate the void ratio and degree of saturation of the soil. What would be the values of density and water content, if the soil were fully saturated at the same void ratio. **(5marks)**

3c. What is soil stabilization? Briefly discuss 3 factors that can affect the strength of stabilized soil? **(7marks)**

QUESTION FOUR (15 marks)

4a. With the aid of diagram and mathematical expressions, explain the total pressure that can be transmitted through a soil mass. **(8marks)**

4b. Define Compaction? Highlight two factors that affect compaction. **(2marks)**

4c. Enumerate three reasons why it is desirable to achieve compaction in soil. **(3marks)**

4d. List four heavy soil compaction equipment **(2marks)**

QUESTION FIVE (15 marks)

5a. What is the significance of estimating vertical stress in a soil mass? (2marks)

5b. What is consolidation? Mention 4 factors that may cause consolidation in a soil. (3marks)

5c. Calculate the dry unit weight, unit weight of solids, porosity, water content and degree of saturation for a sample of silty clay soil weighing 28.81g and having a volume of 14.88cm^3. When dried in an oven, the soil weighed 24.83g. The specific gravity of the soil is 2.68. (5marks)

5d. Describe the modified proctor test, highlighting the contrast between it and the standard proctor test. (5marks)

$q = kiA$

$-a\,dh = k\frac{dh}{dL}At$

$-a\frac{dh}{h}$

$q = kiA$

$k\frac{dh}{dL}A = -a\,d$

Volum = A×h.

$-a \times h = k\,A\,t$

$-a\,dh = ki\,At$

$-a\,dh = k\,dh\,At$

$\frac{-a\,dh}{h} = kAt$

$h\,dh = h^2$

$\frac{dh}{h}$

KAT $\quad -a\,dh = k\frac{h}{L}At$

$\int \frac{-dh}{h} = \frac{KAt}{aL}$

$-\ln h_2 - h_1 = \frac{KA}{aL}(t_2 - t_1)$

$\frac{aL \ln \frac{h_1}{h_2} \cdot k}{A\Delta T}$

$-[h_2 - h_1]$ $\quad \frac{h_1}{h_2}$

Scanned by CamScanner

192566

UNIVERSITY OF IBADAN
FACULTY OF TECHNOLOGY

DEPARTMENT OF AGRICULTURAL AND ENVIRONMENTAL ENGINEERING

B. Sc. Degree Examination

First Semester, 2016/2017 Session

July 2017

TAE 315: SOIL MECHANICS
(3 Units)

Time Allowed: 3 hours

Instructions: **Attempt Any FOUR Questions.**

©UITAE 2016/17

Scanned by CamScanner

QUESTION ONE (15 marks)

1a. Define the following

I. Liquid limit

II. Plastic limit

III. Shrinkage limit **(3marks)**

1b. The natural moisture content of an excavated soil is 24%. Its liquid limit is 62% and plastic limit is 28%. Percentage of particles less than 0.002mm is 23%. Determine:

I. Plasticity index

II. Liquidity index

III. Consistency index **(3marks)**

1c. A constant head permeability test was carried out on a sample of sand. The diameter and length of the sample were 10cm and 20cm respectively. The head of water was maintained at 35cm. If 110cm^3 of water is collected in 80s, compute the hydraulic conductivity of the sand in m/day. If the same sample of sand with a height and diameter of 10cm and 9cm respectively was transferred to a falling head permeameter; the cross-sectional area of the stand pipe was 1.25cm^2. Calculate the time it will take for the head to fall from 60cm to the 30cm mark in the standpipe? **(9marks)**

QUESTION TWO (15 marks)

2a. Using appropriate diagram and terminologies; derive and describe the expression for the field determination of permeability of soils in an unconfined aquifer. **(9marks)**

2b. A pumping well test was made in sands extending to a depth of 15m where an impermeable stratum was encountered. The initial ground-water level was at the ground surface. Observation wells were sited at distances 3 and 7.5m from the pumping well. A

Scanned by CamScanner

steady state was established at about 20hrs where the discharge was 3.8litres/sec. The drawdowns at the two observation wells were 1.5m and 0.35m. Calculate the coefficient of permeability? **(4marks)**

2c. What is soil permeability? Mention two factors that affect permeability of soils? **(2marks)** Porosity

Void ratio $e = \frac{V_v}{V}$

M V W

g g g

L L L

QUESTION THREE (15 marks)

3a. With the aid of a diagram, explain the term soil phase relationship? **(3marks)**

3b. A soil has a bulk density of 1.91g/cm3 and a water content of 9.5%. The value of specific gravity (Gs) is 2.70. Calculate the void ratio and degree of saturation of the soil. What would be the values of density and water content, if the soil were fully saturated at the same void ratio. **(5marks)**

3c. What is soil stabilization? Briefly discuss 3 factors that can affect the strength of stabilized soil? **(7marks)**

$e = \frac{wG_s}{S}$ $G_m =$ $\rho = \frac{M}{V}$

$G_s = \frac{M_s}{V_s \rho_w}$ $S = \frac{M_w}{M_s} \times 100$ $V = 1 + e$

QUESTION FOUR (15 marks)

4a. With the aid of diagram and mathematical expressions, explain the total pressure that can be transmitted through a soil mass. **(8marks)**

4b. Define Compaction? Highlight two factors that affect compaction. **(2marks)**

4c. Enumerate three reasons why it is desirable to achieve compaction in soil. **(3marks)**

4d. List four heavy soil compaction equipment **(2marks)**

$\rho_d = \frac{\rho_w (G_s + eS)}{1+e}$ $\rho_d \rho_w G_s$ $\rho_w w G_s$ $w = \frac{W_s}{W_w} \times 100$ $\rho_t = \rho_w$

$\rho_t \rho_w \frac{G_s(1+w)}{1+e}$

Scanned by CamScanner

QUESTION FIVE (15 marks)

5a. What is the significance of estimating vertical stress in a soil mass? (2marks)

5b. What is consolidation? Mention 4 factors that may cause consolidation in a soil. (3marks)

5c. Calculate the dry unit weight, unit weight of solids, porosity, water content and degree of saturation for a sample of silty clay soil weighing 28.81g and having a volume of 14.88cm^3. When dried in an oven, the soil weighed 24.83g. The specific gravity of the soil is 2.68. (5marks)

5d. Describe the modified proctor test, highlighting the contrast between it and the standard proctor test. (5marks)

$Q = KiAt$ $\quad i = h/L = 35/20$

$= 1.75cm = 0.0175m$

$Q = 110cm^3 = 110\times10^{-6}m^3$

$= 1.1\times10^{-4}m^3$

$A = \frac{\pi d^2}{4} = \frac{\pi\times(0.1)^2}{4} = 7.855\times10^{-3}m^2$

$Q = KiAt$

$1.1\times10^{-4} = K\times0.0175\times7.855\times10^{-3}\times80$

$K = \frac{1.1\times10^{-4}}{0.01099}$ $\quad K = 0.0100m/s$

$K = 1.1594\times10^{-7}m/day$

$e = \frac{V_v}{V}$

$n = \frac{V_v}{V_s}\times100$

$S = \frac{V_s}{V_v}\times100$

$W = M_s$

$K = \frac{2.3aL}{A(t_1 - t_0)}\log\frac{h_1}{h_0}$

$A_{res} = \frac{\pi d^2}{4} = 0.636m^2$

$\frac{1.25\times10^{-4}\times0.1}{}\log\frac{0.6}{}$

Scanned by CamScanner

UNIVERSITY OF IBADAN
FACULTY OF TECHNOLOGY

DEPARTMENT OF AGRICULTURAL AND ENVIRONMENTAL ENGINEERING

B.Sc. Degree Examination

First Semester, 2016/2017 Session

July 2017

TAE 313: FARM POWER AND MAINTAINANCE I
(3 units)

INSTRUCTIONS:

1. Answer **ANY FOUR** questions.
2. This examination carries 75% of the total marks while continuous assessment is 25%

Time Allowed: 3 Hours

Scanned by CamScanner

Question One

(A) In what ways are implements attached to and operated by tractors? **(6 Marks)**

(B) If you were to measure the drawbar power required to pull an implement in the field, state three possible instruments you would use. **(6 Marks)**

(C) i. State and define the terms of the equation for the resultant force in any soil/implement failure system. **(10 Marks)**

ii. What is the accuracy of the equation? **(3 Marks)**

Question Two

(A) Find out the horsepower developed by a small tractor in pulling a plough at the forward speed of 8 km/h. The plough makes a furrow of 20cm wide and 10cm deep. The average draft is 90kg. What will be the unit draft? **(10 Marks)**

(B) Derive an expression for weight transfer with the aid of suitable sketches **(12 Marks)**

(C) What are the three basic forces acting on a tractor at rest without a load? **(3 Marks)**

$$HP = \frac{Draft\ (kg) \times \frac{distance\ (m)}{time\ (s)}}{75}$$

Bursting
compaction
disintegration
mixing
movement
anchorage
inversion
cutting
smoothing

(A) Distinguish betw
failure **(13 Mark**

(B) With the aid of
implement hitch

(C) How would you

(A) Why is it impo
Marks)

(B) In the design o
that are design

(C) With the aid o
between soil-
Marks)

(A) What are the
implements d

(B) What are the
applied by till

(C) With a neat s
dynamic con

Scanned by CamScanner

ated by tractors?

d to pull an

ents you would

resultant force in

)

or in pulling a

makes a furrow

90kg. What will

d of suitable

rest without a

Bursting
compaction
disintegration
mixing
movement
anchorage
inversion
cutting
smoothing

Question Three

(A) Distinguish between wide tine and narrow tine patterns of soil failure **(13 Marks)**

(B) With the aid of neat sketches, explain the three basic effects of implement hitches on the tractor **(6 Marks)**

(C) How would you maintain tillage implements? **(6 Marks)**

Question Four

(A) Why is it important to know the wheel base of a tractor? **(4 Marks)**

(B) In the design of soil engaging implements, state the processes that are designed for. **(9 Marks)**

(C) With the aid of a neat sketch, explain the general relation between soil-metal friction and soil moisture content **(12 Marks)**

Question Five

(A) What are the precautions to be taken in the measurements of implements draft on the field? **(5 Marks)**

(B) What are the factors affecting the reaction of soils to forces applied by tillage tools? **(10 Marks)**

(C) With a neat sketch, outline all the forces acting on a tractor in a dynamic condition **(10 Marks)**

Scanned by CamScanner

UNIVERSITY OF IBADAN

FACULTY OF TECHNOLOGY

DEPARTMENT OF AGRICULTURAL AND ENVIRONMENTAL ENGINEERING

B.Sc. Degree Examination

First Semester, 2016/2017 Session

July 2017

TAE 314

Advanced Computer Programming for Agricultural Engineers

(3 Units)

Time Allowed: 3 hours

Instructions:

Attempt all the questions

(You may use sketches to support your answers)

Please note that the assignments and hands-on constitute 40% as CA.

AOR

©UITAE2016/17

Scanned by CamScanner

QUESTION ONE (25 Marks) (Computers)

a. Briefly discuss the six common graphical symbols of a flowchart. Support your answer with a chart showing the link between the symbols. **(9 marks)**

b. Discuss the generational development of computers listing the structures, main components and the processing speeds. You may present your answer in tabular form. **(8 marks)**

c. Discuss the advantages of modern day computers over the early generation computers? **(6 marks)**

d. How can we make use of obsolete computers to enhance the speed of computation (parallel computing) **(2 marks)**

QUESTION TWO (25 Marks) (Programming)

a. FORTRAN is an outdated program. As an Engineer, do you agree with this notion? Give reasons for your answer. **(6 marks)**

b. What are the roles/significances of header files in C++? Are there equivalents in FORTRAN? How are these header files invoked in both programming languages. **(7 marks)**

c. Briefly list in a tabular form, all the major differences and similarities in FORTRAN and C++ with respect to the following:

- Comments
- Free format Input output
- Arithmetic
- Logical and
- Conditional statements **(12 marks)**

Scanned by CamScanner

QUESTION THREE (25 Marks) (Application)

The Department of Agricultural and Environmental Engineering carried out a research to monitor water use in lettuce. The research field contains 10 rows of crops with 50 crop stands per row.

Write a programme in either FORTRAN or C++ to read the water consumption record of the plants on the first row as recorded in a file and print the values, the minimum, maximum and mean water consumption onto a file (horizontal arrangement) with a view to using the information later.

You will need the information the second time, therefore include in your programme a means of re-reading the information for the second time, and write to a third file in a vertical form.

QUESTION FOUR (25 Marks) (Application)

A poultry house was designed and constructed as class project by 2016/17 set of final year students of Agricultural and Environmental Engineering at the University of Ibadan. The house was equipped with two sensors linked to a data logger. You were provided with a file from the data logger containing two columns, the first being relative humidity within the building and the other being air flow rate across the building recorded at two hours intervals for a particular day.

Write two short programs, one in FORTRAN the other in C++ containing the use of all the program structures (main and sub programs). The program is to read two parameters, relative humidity and air flow rate in a poultry house from the input file and write to an output file with the first column being the airflow rate. Provide a heading in the input file i.e. Airflow rate and Relative humidity

Scanned by CamScanner

UNIVERSITY OF IBADAN
FACULTY OF TECHNOLOGY

DEPARTMENT OF AGRICULTURAL AND ENVIRONMENTAL ENGINEERING

B.Sc. Degree Examination

First Semester, 2014/2015 Session

TAE 312: Agricultural Processing and Storage I
(3 Units)

Instructions

1. **Answer Questions 3, 4, 5and ANY other ONE**
   Use charts as provided where necessary

Time Allowed: 3 Hours

AKA

© UI/FT//TAE/2015.

Scanned by CamScanner

Question ONE

a. Briefly discuss the following:

i. Expression

ii. Extraction

iii. Solvent

iv. Solute

v. Holding Time in Extraction

b. i. List the factors that affects the efficiency of expression

ii. Give an account of application of extraction in food processing

15 marks

Question TWO

a. Define the following terms:

i. Wet Bulb Temperature

ii. Dry Bulb Temperature

iii. Absolute Humidity

iv. Dew Point Temperature

v. Relative Humidity

b. i. Briefly describe the adiabatic condition

ii. Air-vapour mixture is at 60 ^{0}C dry bulb temperature and 35 ^{0}C wet bulb temperature. Using the psychometric chart, determine the relative humidity, humidity ratio, specific volume, enthalpy and dew point temperature.

c. Heated air at 50 ^{0}C and 10% relative humidity is used to dry rice in a bin under saturated condition. Determine the amount of water removed per kg of dry air.

15 marks

Question THREE

a. Briefly discuss the following:

i. Specific Gravity Separator

ii. Disc Separator

iii. Spiral Separator

iv. Indent Cylinder Separator

v. Magnetic Separators

b. i. From the f
screen wheat
analysed in a
table below:

Table for

IS Screen
100
70
50
40
30
20
15
Pan

Calculate the s

i.

ii.

iii.

b. Discuss the

a. i. Briefly

- Hammer
- Plate Mill
- Roller Mil

ii. List and

b. Discuss w
mechanism

c. Sorghum
analysed
table belo

Scanned by CamScanner

b. i. From the first principle, derive the equation for the efficiency of screen wheat milled in a burr mill. The ground product was later on analysed in a set of IS screens. The screen analysis is given in the table below:

Table for the Screen Analysis for Milled Wheat

IS Screen	Width of Opening (mm)	% Material Retained over each sieve		
		Feed	Overflow	Underflow
100	1.000	-	-	-
70	0.708	2	9.8	-
50	0.500	14	51.7	3.0
40	0.420	27	19.0	9.0
30	0.296	32	15.0	49.0
20	0.211	18	3.5	23.2
15	0.1157	4	1.0	7.8
Pan	-	3	-	8.0

Calculate the screen effectiveness of:

i. IS 30
ii. IS 40 and
iii. IS 50

b. Discuss the various classifications of screen openings

25 marks

Question FOUR

a. i. Briefly discuss the following:

- Hammer Mill
- Plate Mill
- Roller Mill

ii. List and explain how some crop variables affect mill design.

b. Discuss with the aid of diagram where applicable the various feed mechanism of a mill

c. Sorghum (3.80 mm size) was milled by a Plate Mill. The flour was analysed by IS sieves for particle size determination as shown in the table below.

0.1351 (1.300)

Scanned by CamScanner

IS Screen NO.	Mass fraction of flour retained over sieve (g)	
	I-setting	II-setting
70	10.1	1.5
50	16.7	13.3
40	36.0	36.1
30	83.2	74.8
20	96.0	104.6
15	8.0	8.4
Pan	0.0	11.3

Determine the flour sized in each of the two settings.

25 marks

Question FIVE

a. Explain the following terms
   i. Thin layer drying <15
   ii. Deep bed drying >15
   iii. Equilibrium moisture content
   iv. Moisture content wet basis
   v. Moisture content dry basis

b. i. Derive from first principle the thin layer drying equation
   ii. State and briefly explain the factors that affect the rate of drying
   iii. Explain the principles of "GREEN HOUSE EFFECT" in solar drying

c. a bin holds 2000kg of wet grain containing 500kg of water. This grain is to be dried to a final moisture content of 14% (wb)
   i. What are the initial and final moisture content of the grain (wet basis and dry basis)
   ii. How much water is removed during drying?

25 marks

$W_t = W_w + W_s$

$M_b = \frac{W_w}{W_t}$ $W_w = \frac{W_w}{W_d}$

$M_b = \frac{W_w}{W_w + W_d}$

Scanned by CamScanner

UNIVERSITY OF IBADAN

FACULTY OF TECHNOLOGY

DEPARTMENT OF AGRICULTURAL AND ENVIRONMENTAL ENGINEERING

B.Sc. Degree Examination

First Semester, 2015/2016 Session

July 2016

TAE 314

Advanced Computer Programming for Agricultural Engineers

(3 Units)

Time Allowed: 3 hours

Instructions:

Attempt all the questions

(You may use sketches to support your answers)

Please note that the assignments and hands-on constitute 40% as CA.

©UITAE2014/15

AOR

Scanned by CamScanner

QUESTION ONE (20 Marks) (Computers)

a. Discuss the generational development of computers listing the structures, main components and the processing speeds. You may present your answer in tabular form. (8 marks)

b. What are the advantages of modern day computers over the early generation computers? (6 marks)

c. FORTRAN is an outdated programme. As an Engineer, do you agree with this notion? If yes, suggest alternative programmes with reasons. (6 marks)

QUESTION TWO (20 Marks) (Programming)

a. Compare and contrast, the programme structures (main and sub programmes) in FORTRAN and C++. (5 marks)

b. What are the roles/significances of header files in C++? Are there equivalents in FORTRAN? How are these header files invoked in both programming languages. (5 marks)

c. Briefly list in a tabular form, all the major differences and similarities in FORTRAN and C++ covering these and any other structure:

- Comments
- Free format Input output
- Arithmetic
- Logical and
- Conditional statements (10 marks)

QU

Write two s
containing t
programmes
and ignition
arrangement
instead of th
correction in

QU

The Departm
carried out a
field contains
Write
to reac
row as
maxim
arrang
You v
include
inform
vertica

QUI

i. Give a
narrativ
they rela
or inclu

ii. Develop

Scanned by CamScanner

QUESTION THREE (20 Marks) (Application)

Write two short programmes, one in FORTRAN the other in C++ containing the use of all the programme structures (main and sub programmes). The programme is to read two parameters, crank speed and ignition chamber temperature of a tractor engine. However the arrangement in the input file listed temperature and crank speed instead of the other way. Use all the sub programmes to make the correction in the main programme.

QUESTION FOUR (20 Marks) (Application)

The Department of Agricultural and Environmental Engineering carried out a research to monitor water use in lettuce. The research field contains 10 rows of crops with 50 crops stand per row.

Write a programme in either FORTRAN or C++ to read the water consumption record of the plants on the first row as recorded in a file and print the values, the minimum, maximum and mean water consumption onto a file (horizontal arrangement) with a view to using the information later.

You will need the information the second time, therefore include in your programme a means of re-reading the information for the second time, and write to a third file in a vertical form.

QUESTION FIVE (20 Marks) (Application)

i. Give a graphical representation of the symbols along with the narrative of the functions of the components of a flowchart as they relate to each other. The narratives may be separated from or included in the symbols. **(10 marks)**

ii. Develop flowcharts for the processes in Questions 3 and 4, **(10 marks)**

Scanned by CamScanner

UNIVERSITY OF IBADAN
FACULTY OF TECHNOLOGY

DEPARTMENT OF AGRICULTURAL AND ENVIRONMENTAL ENGINEERING

B.Sc. Degree Examination

First Semester, 2015/2016 Session

TAE 312: Agricultural Processing and Storage I

(3 Units)

Instruction: Attempt five questions only

Time Allowed: 3 Hours

NAV

© UI/FT//TAE/2016

Scanned by CamScanner

Question One (20 marks)

a. Define the term agroprocessing and state its three facets with an example of each one.

b. State the differences and similarities between the following processing unit operations: (i) threshing and shelling (ii) decortication and dehulling (iii) dehusking and peeling (iv) slicing and milling.

Question Two (20 marks)

With the aid of a labeled diagram, describe the spike-toothed thresher and discuss the functions of the (i) feeding unit (ii) threshing unit (iii) separation unit (iv) cleaning unit.

Question Three (20 marks)

a. List five thresher performance indicators and state the expressions relating them to threshing outputs.

b. The amount of seeds separated at any point along the walker length of a combine can be determined using the following equation:

$$S_L = 1 - e^{-bL}$$

where: L=walker length in m, S_L=fraction of seed separated in decimal and b= constant.

If the seed loss on a walker of 3.24m length is 10% and the desired loss is 3%, what would be the required walker length?

Question Four (20 marks)

a. In a grain combine, what are the possible cause of the following conditions: (i) excessive amount of unthreshed grains (ii) excessive free grain loss over walker (iii) cracked grains (iv) excessive free head loss over rear of shoe (v) excessive amount of chaff in tailings?

b. A combine was tested for harvesting ad handling wheat in the Lake Chad Basin of Borno State, Nigeria and the following observations were made:

Scanned by CamScanner

Total area harvested = 88m^2, total time utilized = 35min, total material left over rack = 18kg, free grains over rack = 150g, unthreshed grains over shoes = 120g, total material left over shoes = 8kg and net grain collected in tank = 34kg.

Calculate

(i) Grain yield and total loss in kg/ha (ii) cylinder loss, rack loss, shoes loss and total grain loss in percent of total yield (iii) total feed rate in kg/h (iv) rate of straw and chaff over the rack and over the shoes in kg/h and (v) percentage of straw and chaff retained in the rack.

Question Five (20 marks)

a. Define the term communition and state four purposes of the operation.

b. (i) Describe the size reduction process and highlight the factors that influence the energy consumption of the operation.

(ii) A food material was milled from 6mm to 0.0012mm using a 10hp motor. Would this motor be adequate for reducing the size of the particles to 0.0008mm, if the Rittinger's law is applicable and 1hp is 745.7?

Question Six (20 marks)

a. (i) Define the term moisture content (ii) State the bases in which moisture content can be expressed and give the use to which the moisture content expressed in each basis can be put.

b. (i) Derive an expression for converting moisture content from dry basis to wet basis.

(iii) 500kg of maize was dried from a moisture content of 30% to the moisture content of 12%. Calculate the amount of water removed and the final mass of the product.

Scanned by CamScanner

Question Seven (20 marks)

a. Define the following terms (i) Drying (ii) equilibrium moisture content (iii) moisture sorption isotherm (iv) moisture sorption hysteresis (v) critical moisture content (vi) constant rate phase (vii) falling rate phase (viii) period of induction (ix) psychrometry (x) moisture sorption isotherm model.

(i) Moist air initially at the dry bulb and wet bulb temperatures of 30°C and 25°C was heated sensibly to the temperature of 50°C prior to its passage into the drying chamber of a tray dryer. Using the psychrometric chart, determine

(i) the other thermodynamic properties of the air before and after heating, (ii) the amount of heat added per unit mass of the air during heating.

Scanned by CamScanner

UNIVERSITY OF IBADAN
FACULTY OF TECHNOLOGY

DEPARTMENT OF AGRICULTURAL AND ENVIRONMENTAL ENGINEERING

B.Sc. Degree Examination
First Semester, 2015/2016 Session

TAE 310: Introduction to Farm Buildings and Structures
(3 Units)
Time Allowed: 3Hours

Instructions

1. This examination is in two sections, A and B. Section A is contained in a separate sheet to be answered and submitted while Section B is contained in this sheet.
2. Candidates are to answer all the questions in Section A **AND** Question 1 and any other two from Section B.
3. Section A carries 30 marks; Section B 50 marks while the remaining 20 marks are allocated to Continuous Assessment.

YM

© TAE 2016

Scanned by CamScanner

Examination is 80

MOO

Question One (20 marks)

The Department of Agricultural and Environmental Engineering of the University of Ibadan is planning to construct an implement shed which is 20m long and 7.5m wide. The concrete floor is 25cm thick and because of the weights of the equipment the floor would be expected to support, it is recommended that the concrete mix should be 1: 2: 4 by volume. It is also suggested that 150 litres of water should be made available per bag of cement. A 25.0 % decrease in volume and 4.0 % wastage of material are to be provided for when supplying the construction materials. The densities of cement, sand, and coarse aggregate are 1450kg/m^3, 1700kg/m^3 and 6186kg/m^3 respectively. A 50kg bag of cement occupies a volume of 37litres.

50 x 37

$$V_m = \frac{(100 + p + s)}{100} \times V_c$$

$$\text{Quantity of Cement} = \frac{x}{(x + y + z)} \times V_m$$

$$\text{Quantity of Sand} = \frac{y}{(x + y + z)} \times V_m$$

$$\text{Quantity of Gravel} = \frac{z}{(x + y + z)} \times V_m$$

Using the formulae given above, determine the amount of each of the materials of construction that should be supplied.

High shrinkage rate: swelling ratio / shrinkage

a) Discu
(5 Mark

b) Mr.
of shel
storing
shelled
what i
Deter
all the

a) Th
locat
appr
emp
vari

b) E
farr

a)
co
wi
fac

b)
as

Scanned by CamScanner

s)
ental Engineering of the
mplement shed which is
5cm thick and because of
expected to support, it is
2: 4 by volume. It is also
ade available per bag of
wastage of material are to
materials. The densities
0kg/m^3, 1700kg/m^3 and
t occupies a volume of

amount of each of the

Question Two (15 marks)

a) Discuss two reasons why it may be necessary to store agricultural produce *(5 Marks)* Economic Reasons Research / planting materials

b) Mr. Awe, a maize farmer in Iseyin is expecting to harvest about 10 tonnes of shelled corn at the end of the present season but would be interested in storing them on cob using cribs. It is known that 1m^3 of maize on cob when shelled will give 0.4m^3 of grains. If the density of maize is taken as 720kg/m^3, what is the volume of grain on cob that Mr. Awe is expected to harvest? Determine the appropriate sizes of a crib(s) that Mr. Awe will require to store all the harvest. *(10 Marks)*

Question Three (15 Marks)

a) The success of an agricultural enterprise depends largely on where it is located. Discuss four factors that should be taken into account in selecting an appropriate location for an agricultural enterprise. Your discussion should emphasize the special reasons why such a factor should be considered and the various ways by which it can be achieved.{10 marks}

Plant

b) Briefly discuss the two objectives that should be aimed at in the layout of a farmstead.{5 marks}

Question Four (15 Marks)

a) There is always a catalogue from which materials could be selected for construction in any environment and situation but the success of the project will depend on appropriate selection of construction materials. Discuss three factors that may guide you in selecting materials of construction. {9 marks}

Type and function of the building
Cultural acceptability - Availability of alternative materials

b) Discuss two advantages and two disadvantages associated with using earth as building material for farm structures. {6 marks}- Resistance to fire
economic consideration. Noise absorbance
Ease of work
cheapness

High skrinkage rate
poor water resistance to penetration.
Low resistance to abrasion

Scanned by CamScanner