Large Extra Dimensions

PHY 599: Graduate Seminar II

Samuel Homiller[1]

[1]Department of Physics & Astronomy
Stony Brook University

February 29, 2016

Extra dimensions through the years

Extra dimensions have a long history for unification purposes (Kaluza & Klein $\sim$1920.)

Extra dimensions also a necessary part of string theories, but at length scales $\sim \ell_{Pl}$.

Arkani-Hamed & co. postulated *large* extra dimensions in 1998.

Led to lots of excitement for quantum gravity detection at the LHC.

The Standard Model & Grand Unification

Complete description of the electromagnetic, weak, and strong nuclear interactions via gauge theory $SU(3) \otimes SU(2) \otimes U(1)$.

Does not include gravitational forces.

Coupling constants don't intersect at high energy – can't be unified into a single gauge interaction.

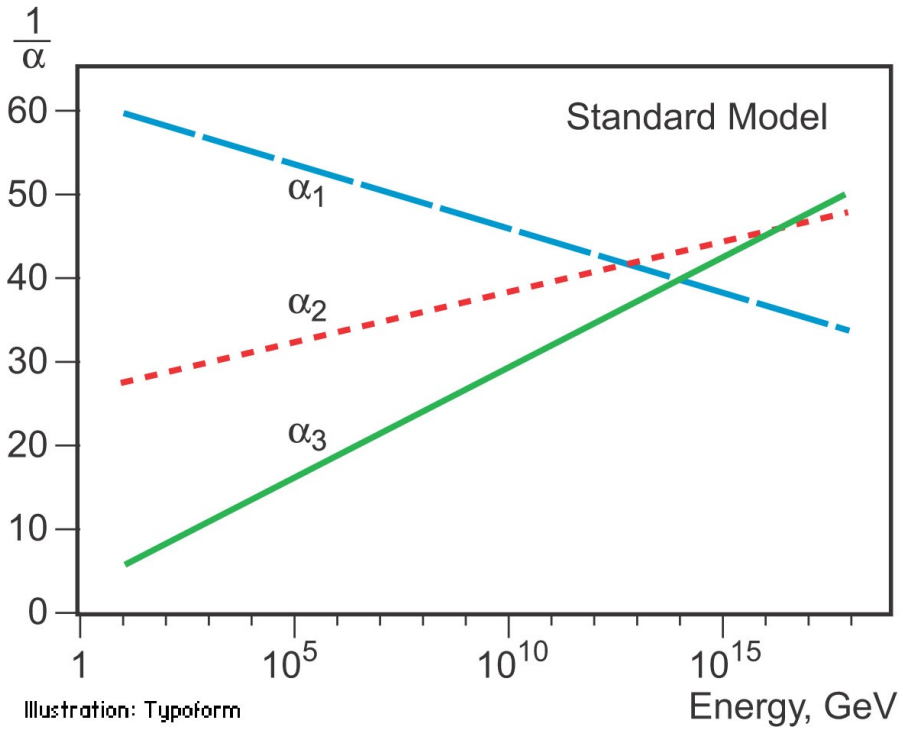

Figure: Running of coupling constants in the standard model

Unification

Fundamental scales in nature:

- Electroweak scale:

$$m_{EW} = \left(G_F\sqrt{2}\right)^{-1/2} = 246 \text{ GeV}$$

- Planck scale:

$$M_{Pl} = G_N^{-1/2} = 1.22 \times 10^{19} \text{ GeV}$$

Unification

Fundamental scales in nature:

- Electroweak scale:

$$m_{EW} = \left(G_F\sqrt{2}\right)^{-1/2} = 246 \text{ GeV}$$

- Planck scale:

$$M_{Pl} = G_N^{-1/2} = 1.22 \times 10^{19} \text{ GeV}$$

$M_{Pl}/m_{EW} \sim 10^{17}$ – the *Hierarchy Problem*

Standard Model extensions: supersymmetry, technicolor, ...

Compact Extra Dimensions

Extend Gauss's Law to $4+\delta$ dimensions:

$$V(r) \sim \frac{G_N}{r} = \frac{1}{M_{Pl}^2}\frac{1}{r} \tag{1}$$

$$\rightarrow \frac{1}{M_{Pl(4+\delta)}^{2+\delta}} 1 r^{1+\delta} \tag{2}$$

Compact Extra Dimensions

Extend Gauss's Law to $4+\delta$ dimensions:

$$V(r) \sim \frac{G_N}{r} = \frac{1}{M_{Pl}^2}\frac{1}{r} \tag{1}$$

$$\rightarrow \frac{1}{M_{Pl(4+\delta)}^{2+\delta}} 1 r^{1+\delta} \tag{2}$$

If extra dimensions are compact of radius $\sim R$, then for distances $r >> R$

$$\rightarrow \frac{1}{M_{Pl(4+\delta)}^{2+\delta} R^{\delta}}\frac{1}{r} \tag{3}$$

So the effective scale we see is $M_{Pl}^2 \sim M_{Pl(4+\delta)}^{2+\delta} R^{\delta}$.

Compact Extra Dimensions

If we assume $M_{Pl(4+\delta)} \sim m_{EW}$, we can choose R to reproduce the original M_{Pl}, and we find:

- $\delta = 1 \implies R \sim 10^{13}$ cm
- $\delta = 2 \implies R \sim 100\ \mu$m to 1 mm
- $\delta = 3 \implies R \sim 10\ \mu$m

Compact Extra Dimensions

If we assume $M_{Pl(4+\delta)} \sim m_{EW}$, we can choose R to reproduce the original M_{Pl}, and we find:

- $\delta = 1 \implies R \sim 10^{13}$ cm
- $\delta = 2 \implies R \sim 100\ \mu$m to 1 mm
- $\delta = 3 \implies R \sim 10\ \mu$m

Experiments can only definitively exclude the case $\delta = 1$!

In contrast to string theories ("small" extra dimensions") where $l_{Pl} \sim 1.6 \times 10^{-35}$ m is the only fundamental length scale.

Compact Extra Dimensions

If we assume $M_{Pl(4+\delta)} \sim m_{EW}$, we can choose R to reproduce the original M_{Pl}, and we find:

- $\delta = 1 \implies R \sim 10^{13}$ cm
- $\delta = 2 \implies R \sim 100\ \mu$m to 1 mm
- $\delta = 3 \implies R \sim 10\ \mu$m

Experiments can only definitively exclude the case $\delta = 1$!

In contrast to string theories ("small" extra dimensions") where $l_{Pl} \sim 1.6 \times 10^{-35}$ m is the only fundamental length scale.

But introduces new "hierarchy": $m_{EW}/\frac{1}{R} \simeq 10^{14}$.

Kaluza-Klein Partners

Standard model fields constrained to 3 spatial dimensions.

But this doesn't apply to the graviton!

Quantized momenta in extra dimensions observed as rest mass

$$E^2 = p_\delta^2 + m^2 \rightarrow M^2 \quad (4)$$

$$M^2 = m^2 + \alpha \left(\frac{n}{r_\delta}\right)^2 + \ldots (5)$$

Leads to ladder of "Kaluza Klein partners" for graviton, accessible via interactions.

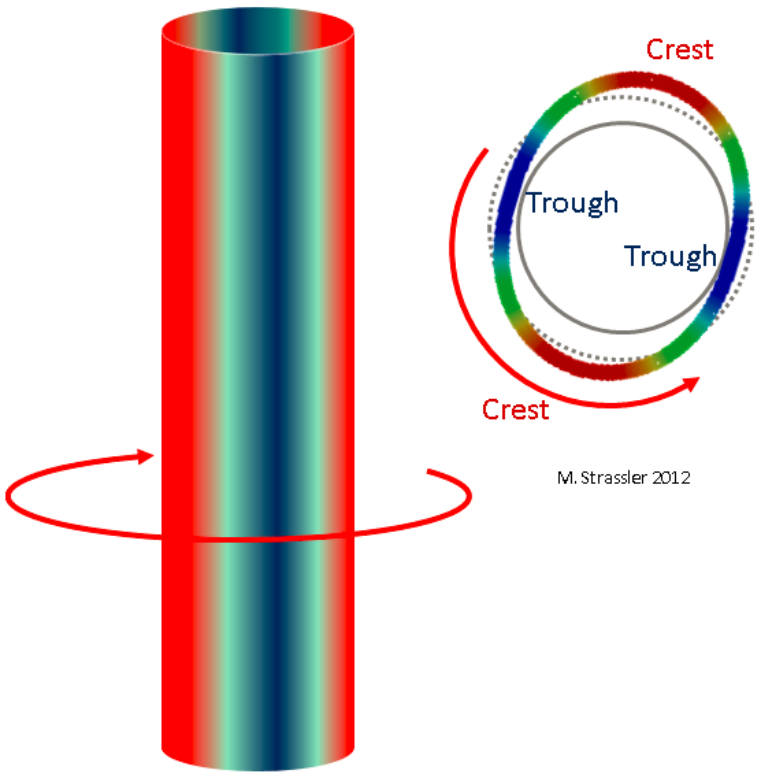

Figure: Standing wave in one compact extra dimension, interpreted as mass along tube. (Accessed at profmattstrassler.files.wordpress.com)

Torsion Balance Experiments

Detector pendulum with 21 symmetric "missing mass holes" hung above similar attractor plate.

Attractor plate rotated, creating an oscillating torques at $21k\omega$.

Holes in attractor plate designed to cancel the 21ω torque, assuming inverse-square law holds.

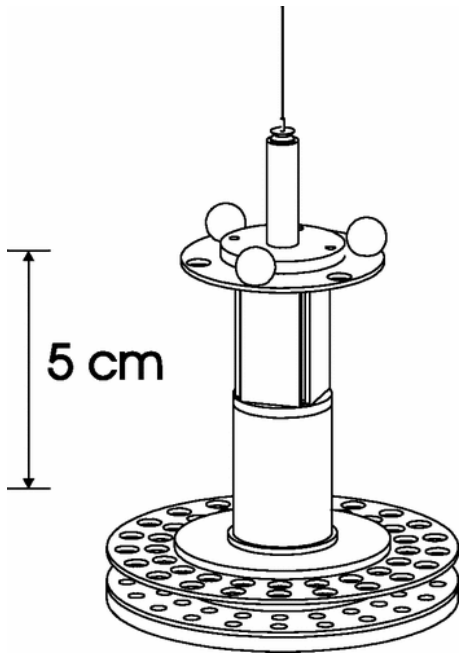

Figure: Schematic of detector and attractor used for torsion-balance experiment. The distance between plates is exaggerated for clarity, and the electrical shield is not shown.

Torsion Balance Experiments

Parameterize gravitational potential with Yukawa deviation:

$$V(r) = -G\frac{m_1 m_2}{r}\left(1 + \alpha e^{-r/\lambda}\right) \tag{6}$$

Record twisting of detector and convert into harmonic torques, which are fit as a function of separation.

Results constrain extra dimension to size $R \leq 44\ \mu\text{m}$

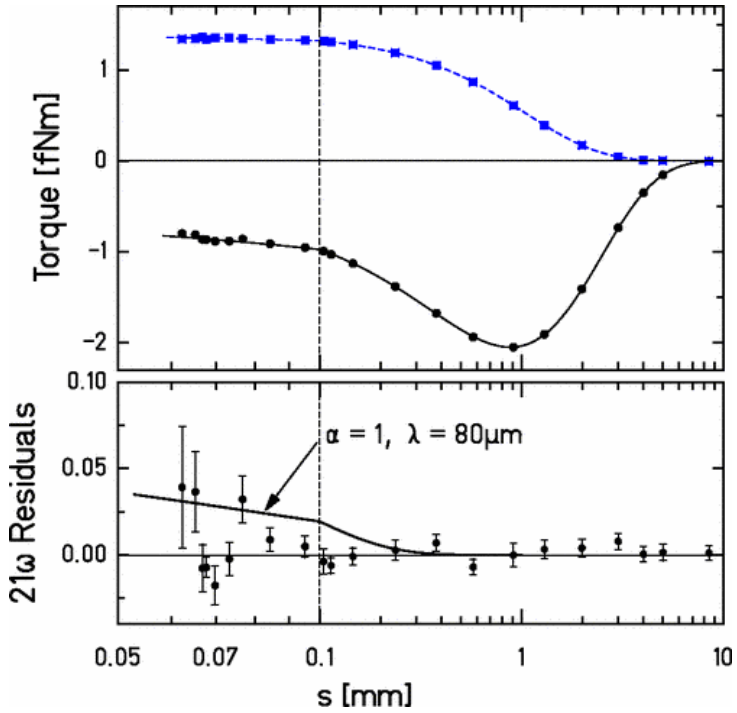

Figure: Torque as a function of plate separation. Upper panel shows 21ω (black) and 42ω (blue) torques, with smooth Newtonian fit overlaid. Lower panel shows 21ω residuals. (Courtesy Kapner *et al.*)

Microscopic Black Holes

When a black holes radius is is much less than R, becomes insensitive to the details of compactification

$\implies$ behaves like a $4 + \delta$ dimensional Schwarzschild black hole!

Semi-classical reasoning suggests that if the impact parameter of partons in a collider is less than the Schwarzschild radius, a black hole will form with $M_{BH} = \sqrt{s}$

Quickly decay via Hawking radiation into any of the standard model particles (with mass less than the Hawking temperature).

Microscopic Black Holes

When a black holes radius is is much less than R, becomes insensitive to the details of compactification

$\implies$ behaves like a $4 + \delta$ dimensional Schwarzschild black hole!

Semi-classical reasoning suggests that if the impact parameter of partons in a collider is less than the Schwarzschild radius, a black hole will form with $M_{BH} = \sqrt{s}$

Quickly decay via Hawking radiation into any of the standard model particles (with mass less than the Hawking temperature).

These are all signatures that should be visible at the LHC!

Black Hole Searches at the LHC

Search for ensemble of high-energy particles from decay of black holes.

Depends on model, $M_{Pl(4+\delta)}$, and rotation of black hole.

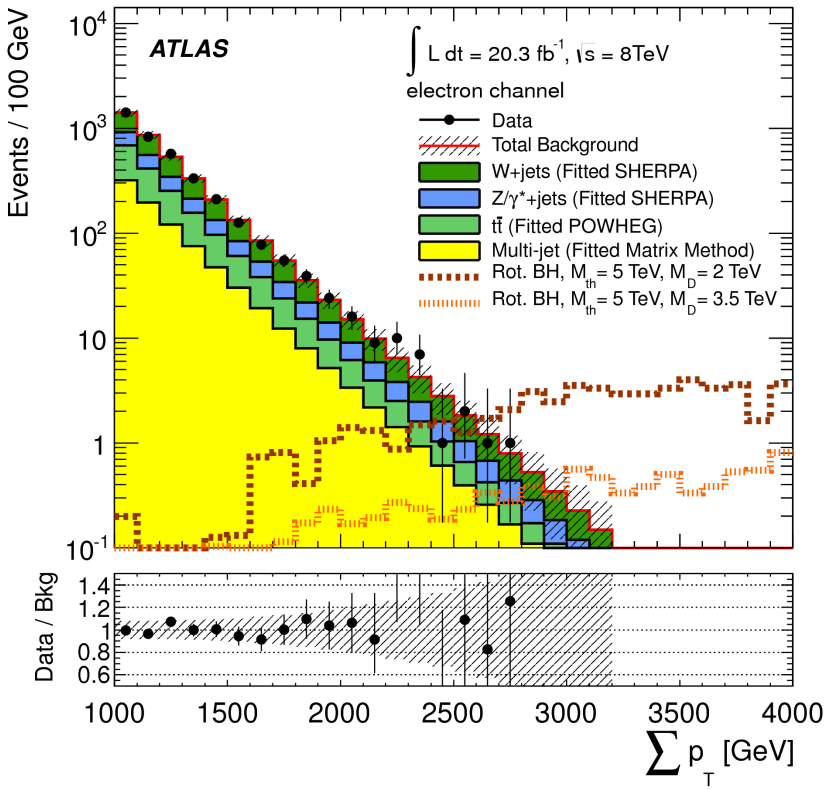

Figure: Total transverse momentum distribution in the electron channel. Representative rotating black holes in $\delta = 6$ dimensions are overlaid as an illustration. (Courtesy ATLAS Collaboration)

Black Hole Searches at the LHC

Search for ensemble of high-energy particles from decay of black holes.

Depends on model, $M_{Pl(4+\delta)}$, and rotation of black hole.

ATLAS constrained search to events containing at least high-p_T events, with at least one lepton.

Given dimension and $M_{Pl(4+\delta)}$, can put lower limit on threshold mass of black holes.

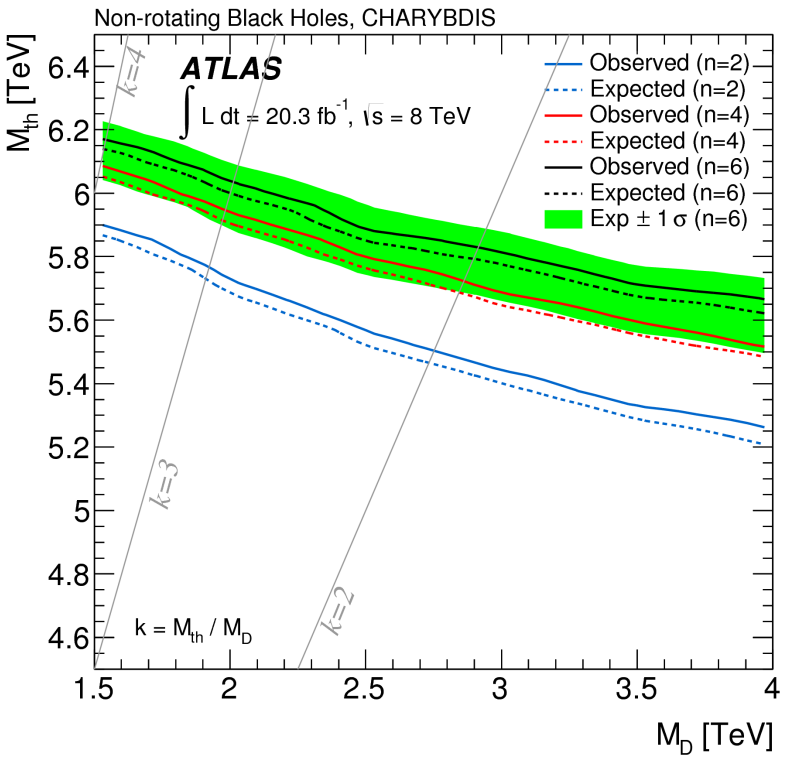

Figure: 95% CL exclusion limits for $M_{Pl(4+\delta)} \equiv M_D$ and M_{th} based on black hole signal simulations. The $\pm 1\sigma$ variation is comparable for the other cases. (Courtesy ATLAS Collaboration)

Conclusions

Allowing gravity to propagate in extra dimensions can eliminate hierarchy problem between m_{EW} and M_{Pl} without additions to the standard model.

But extra dimensions create new "hierarchy".

No experimental signs yet, but can't rule out $\delta > 2$.

Still leaves possibility for quantum gravity effects at relatively low energies!

Lots of exciting searches still to be done at the LHC (and beyond?).

Bibliography

N.Arkani-Hamed, S. Dimopoulos, G. Dvali, *The hierarchy problem and new dimensions at a millimeter*, Phys. Lett. B **429**, 263-272 (1998).

S. Nussinov, R. Shrock, *Some remarks on theories with large compact dimensions and TeV-scale quantum gravity*, Phys. Rev. D **59**, 105002 (1999).

D. J. Kapner, *et al.*, *Tests of the Gravitational Inverse-Square Law below the Dark-Energy Length Scale*, Phys. Rev. Lett **98**, 021101 (2007).

CMS Collaboration, *Search for microscopic black hole signatures at the Large Hadron Collider*, Phys. Lett. B **697**, 434-453 (2011).

ATLAS Collaboration, *Search for microscopic black holes and string balls in final states with leptons and jets with the ATLAS detector at* $\sqrt{s} = 8$ *TeV*, JHEP **08**, 103 (2014).

Thanks to Professor Shrock for his input!