Search for Nucleon Decays into Invisible Channels in ^{136}Xe

Samuel Homiller

University of Illinois at Urbana-Champaign

December 11, 2014

Technical Abstract

This thesis reports on a search for the decay of nucleons into invisible channels from ^{136}Xe, using data from the EXO-200 liquid xenon detector. The search is independent of the decay mode of the nucleons because it considers only the subsequent decay processes of the daughter nuclei following a disappearance in ^{136}Xe, and also considers the possibility that two or three nucleons could decay as a multiplet. The analysis employs a simultaneous maximum-likelihood fit to the energy spectra of the low-background data from EXO-200 using probability density functions derived from Monte Carlo simulations, as well as additional constraints from event topology and independent studies on different background sources. The results of the analysis are consistent with no nucleon disappearances occuring in the liquid xenon. Based on the results of the fit, lower limits on the lifetime of each multiplet's decay, independent of the decay products, have been derived at the 90% confidence level. All limits are in agreement with previous searches, and the most stringent universal limits to date are reported for the *np*, *nnp*, *npp*, and *ppp* processes at $\tau_{np} \geq 1.3 \times 10^{24}$ yr, $\tau_{nnp} \geq 1.5 \times 10^{23}$ yr, $\tau_{npp} \geq 1.0 \times 10^{23}$ yr, and $\tau_{ppp} \geq 2.4 \times 10^{23}$ yr.

Nontechnical Abstract

This thesis reports on a search for the decays or disappearances of nucleons (protons and neutrons) from ^{136}Xe using data from the EXO-200 detector. Discovery of such decays would be in violation of the standard model of particle physics, which predicts conservation of the total number of protons and neutrons in nuclear processes. The fit to the low-background data from EXO-200 utilizes simulations of processes within the detector, whose effectiveness is verified in this work. Protons and neutrons decaying individually, in pairs, or in triplets were all searched for and no evidence of the standard model being incorrect was found. The results were also used to derive lower limits on the lifetime of each possible decay process at the 90% confidence level. The reported imits are in agreement with previous results and in some cases, are the most stringent limits to date.

1 Introduction and Background

1.1 Motivation

Since the inception of the standard model, the conservation of baryon (B) and lepton (L) number, first proposed separately by Wigner [1] and Stueckelberg [2], have been cornerstones of the theory. It is well understood that these are the result of an accidental symmetry and arise because the standard model is only an effective quantum field theory. Consequently, the violation of B and L are of particular importance to develop merit of grand unified theories.

The success of the $SU(2) \times U(1) \times SU(3)$ standard model has motivated many grand unified theories (GUTs) [3, 4, 5, 6, 7, 8] to incorporate gravitation by uniting gravity and the other three gauge groups into a larger symmetry group, which is spontaneously broken at a high energy scale. The simplest of these grand unified theories is the "minimal" $SU(5)$ model proposed by Georgi and Glashow [3]. This model demands the instability of the proton in a decay mediated by an $SU(3)$-colored super-heavy vector boson of unknown mass [3]. The details of the minimal $SU(5)$ model with regards to proton decay are discussed more fully in [9]. Beyond the minimal $SU(5)$ model, many other GUTs have been proposed, such as the minimal $SO(10)$ model [4], supersymmetric (SUSY) $SU(5)$ and $SO(10)$ models [5, 6], the "flipped" $SU(5)$ model [7], and a left-right symmetric $SO(10)$ model [8]. Additionally, while the accidental symmetries of the standard model forbid the violation of baryon or lepton number violation at all orders of perturbation theory, 't Hooft has discussed non-perturbative effects which could violate $B + L$, but not $B - L$ [10].

Despite the multitude of theoretical possibilities, experimental tests have thus far shown the proton to be stable with lower limits on its half-life at 6×10^{29} to 2.5×10^{31}, depending on the decay mode (see [11] for a detailed breakdown).

Recently, more attention has been devoted to the simultaneous decay of multiple nucleons at once. In particular, the possibility of $\Delta B = 2$ operators that change strangeness is described in [12], which also outlines the calculations of decay amplitudes, focusing on deuteron decays, and describes the experimental accessibility of these decays. A different approach is taken in [13], which shows a symmetry in the standard model Lagrangian, which forbids $\Delta B = 1$ and 2 operators, but permits $\Delta B = 3$ operators in high dimensions. Additionally, [14] discusses a higher-dimensional model that simultaneously accounts for small neutrino masses and the suppression of proton decay but predicts the decay $n \to 3\nu$ as a dominant decay mode of the neutron.

The variety of possible modes for nucleon, di-nucleon, and tri-nucleon decays provides a unique opportunity to probe many different untested theories. Even in the absence of a discovery, more stingent limits on the lifetimes of the different decay modes can shed light on the feasibility of the aforementioned GUTs or even rule them out completely.

1.2 Review of Previous Results

Several works have set strong limits on the decay of protons into a variety of channels.

Most recently, the Super-Kamiokande collaboration searched for the decay of nucleons into charged antileptons plus mesons, or protons decaying via the channel $p \to \mu^+ K^0$ [15], [16]. In all, [15, 16] searched 13 possible channels for nucleon decay, obtaining bounds ranging from 3.6×10^{31} years to 8.2×10^{33} years at the 90% confidence level, depending on the particular channel. These stringent bounds certainly cast doubt on

the predictions of some models described above, but they cannot acount for decays into "invisible" channels, such as $p \to 3\nu$ or $n \to 3\nu$. They also don't account for the simultaneous decay of multiple nucleons. A search sensitive to these last two points is the aim of the present work.

1.2.1 Searches Independent of Decay Mode

Some early results [17] give a lower limit of 1.6×10^{25} years for the mean lifetime of single nucleons in a ^{130}Te nucleus. This bound is much lower than the limits for specific nucleon decay modes obtained by other underground neutrino experiments (see, for example, [15], [16], described above) but has the benefit of being independent of the decay mode. This universal bound is achieved by looking for decays of the large daughter nucleus, as opposed to the products of the specific decay mode. The nucleon decay is inferred by the presence of the daughter nucleus of the decay – in this case, the disappearance of a neutron from ^{130}Te would produce ^{129}Te, and the disappearance of a proton would produce ^{129}Sb. Because the products of the actual nucleon's decay are irrelevant in this methodology, this type of search is sensitive to the "invisible" decays we are interested in for the present work.

The BOREXINO collaboration has also searched for nucleon decays independent of decay mode via the decays of ^{12}C, ^{13}C and ^{16}O [18]. The BOREXINO Counting Test Facility utilized a 4.2-ton scintillation detector, making their bounds significantly stronger than those derived by DAMA (described in Section 1.2.2) for the n, p, nn, and pp channels they investigated. However, because of the smaller atomic numbers of the isotopes used by BOREXINO, their detector is not sensitive to the tri-nucleon decay processes.

1.2.2 Results from DAMA/LXe

More recently, the DAMA/LXe collaboration performed a similar search for nucleon decays independent of decay mode [19], [20]. These searches are of particular interest to the current work, as both were performed using a liquid xenon scintillator and both searched for the simultaneous decays of multiple nucleons. DAMA utilized a 6.5-kg scintillator filled with liquid xenon, first enriched to 99.5% in ^{129}Xe in [19], then to 68.8% in ^{136}Xe in [20]. In [19], in addition to searching for proton decays using methods similar to [17], the di-nucleon decay modes nn and pp were also investigated for the first time. In [20], the search was further extended to tri-nucleon decay modes. EXO-200 also uses a ^{136}Xe as its detector medium, permitting a direct comparison between this work and [20].

1.3 Experimental Background

Following the works of [17], [19], [20], and [18], a similar search is proposed for the daughter isotopes of nucleon decays in the EXO-200 detector. The EXO-200 detector will be described in more detail in Section 2.1.1. Here, we outline the physics behind the experimental methods described in Section 2

1.3.1 Daughter Nuclei

Nucleon decays in ^{136}Xe were searched for via the resulting daughter nucleus that remains after a nucleon decays into an unknown channel [20]. When a nucleon decay occurs, the daughter nucleus is typically left in an excited state. As long as this excited state energy is less than the binding energy of th eleast bound nucleon in the daughter nucleus, the nucleus will de-excite by γ emission [17]. Table 1.1 shows the subsequent decay chains of the daughter nuclei after this de-excitation.

Table 1.1: Table of the daughter nuclei corresponding to each of the nine possible nucleon, di-nucleon, or tri-nucleon decays in ^{136}Xe. For each daughter nucleus, the main part of the subsequent decay chain is shown, with the decay type, Q-value, and half-life of the decays given. The decay chains terminate when they reach an isotope that is experimentally stable. All half-lives and Q-values here are taken from [21]. ^{*134}Xe is predicted to undergo double-beta decay, but because of the abundance of ^{134}Xe in EXO-200 and the long half-life of the double-beta decay, this decay mode is excluded from this analysis.

Decay	Daughter	Decay Chain ($\xrightarrow[\text{half-life}]{\beta^-,\ Q\text{-value}}$)
n	^{135}Xe	$^{135}\text{Xe} \xrightarrow[\text{9.14 hours}]{\beta^-,\ 1.165\ \text{MeV}} {}^{135}\text{Cs}$
p	^{135}I	$^{135}\text{I} \xrightarrow[\text{6.57 min}]{\beta^-,\ 2.63\ \text{MeV}} {}^{135}\text{Xe} \xrightarrow[\text{9.14 hours}]{\beta^-,\ 1.165\ \text{MeV}} {}^{135}\text{Cs}$
nn	^{134}Xe	Stable*
np	^{134}I	$^{134}\text{I} \xrightarrow[\text{52.4 min}]{\beta^-,\ 4.175\ \text{MeV}} {}^{134}\text{Xe}$
pp	^{134}Te	$^{134}\text{Te} \xrightarrow[\text{41.8 min}]{\beta^-,\ 1.51\ \text{MeV}} {}^{134}\text{I} \xrightarrow[\text{52.4 min}]{\beta^-,\ 4.175\ \text{MeV}} {}^{134}\text{Xe}$
nnn	^{133}Xe	$^{133}\text{Xe} \xrightarrow[\text{5.24 days}]{\beta^-,\ 427\ \text{keV}} {}^{133}\text{Cs}$
nnp	^{133}I	$^{133}\text{I} \xrightarrow[\text{20.8 hours}]{\beta^-,\ 1.19\ \text{MeV}} {}^{133}\text{Xe} \xrightarrow[\text{5.24 days}]{\beta^-,\ 427\ \text{keV}} {}^{133}\text{Cs}$
npp	^{133}Te	$^{133}\text{Te} \xrightarrow[\text{12.5 min}]{\beta^-,\ 2.92\ \text{MeV}} {}^{133}\text{I} \xrightarrow[\text{20.8hours}]{\beta^-,\ 1.19\ \text{MeV}} {}^{133}\text{Xe} \xrightarrow[\text{5.24 days}]{\beta^-,\ 427\ \text{keV}} {}^{133}\text{Cs}$
ppp	^{133}Sb	$^{133}\text{Sb} \xrightarrow[\text{2.5 min}]{\beta^-,\ 4.00\ \text{MeV}} {}^{133}\text{Te} \xrightarrow[\text{12.5 min}]{\beta^-,\ 2.92\ \text{MeV}} {}^{133}\text{I} \xrightarrow[\text{20.8 hours}]{\beta^-,\ 1.19\ \text{MeV}} {}^{133}\text{Xe} \xrightarrow[\text{5.24 days}]{\beta^-,\ 427\ \text{keV}} {}^{133}\text{Cs}$

Table 1.2: The effective number of objects participating in the hypothetical nucleon decay for each nucleon decay mode. This number counts the number of nucleons or the number of pairs or triplets of nucleons, whose binding energy is small enough such that a nucleon decay would create the expected daughter nucleus with 100% probability. See text for details.

Decay	n	p	np	pp	nnn	nnp	npp	ppp
N_{obj}^{eff}	32	26	2	7	1	1	1	1

By fitting to low-background data from EXO-200, a confidence interval for the number of decaying nuclei will be obtained. The fit to low-background data from EXO-200 will be described in detail in Section 2.5. Given a number of nucleon decay related events, $S_{\Delta E}$ in an energy range ΔE, we can conservatively assume that all the daughter-isotope decay related events fit at the 90% confidence level are the result of a nucleon decay in ^{136}Xe. Following [20], the lower limit on the lifetime at the 90% confidence level is given by

$$\tau = \frac{\epsilon_{\Delta E} \cdot N_{\text{nucl}} \cdot N_{\text{obj}}^{\text{eff}} \cdot T}{S_{\Delta E}}, \tag{1.1}$$

where N_{nucl} is the number of ^{136}Xe isotopes present in the volume, $N_{\text{obj}}^{\text{eff}}$ is the effective number of objects that can participate in the decay per ^{136}Xe nucleus, as described above and in Table 1.2, T is the time of the search, and $\epsilon_{\Delta E}$ is the total efficiency of the EXO-200 detector at detecting the nucleon decay process in the energy range ΔE, computed as the ratio of the number of events detected in the considered energy range over the number of events that occurred in the analyzed volume.

1.4 The EXO Collaboration

The Enriched Xenon Observatory (EXO) collaboration seeks to observe the hypothetical neutrino-less mode of double-beta decay [22], [23]. Such an observation would imply the Majorana nature of neutrinos and shed light on their mass scale. The long-term goal of the EXO project is a proposed 5000-kg detector filled with liquid xenon. Efforts are also underway to incorporate the tagging of the daughter nucleus of double-beta decay, ^{136}Ba, which would effectively eliminate all background to the double-beta decay process.

The first phase of the detector, EXO-200, is a low-background, cylindrical, time projection chamber (TPC), filled with 200 kg of liquid xenon, enriched to the isotope 136 at 80.6%, the neutrino-less double-beta decay candidate and the only isotope of xenon in which the two-neutrino double-beta decay has been observed (although it is also predicted to occur in ^{134}Xe). The detector is located underground at the Waste Isolation Pilot Plant near Carlsbad, New Mexico. The detector is described in detail in Section 2.1.1. EXO-200 was the first detector to observe the double-beta decay of ^{136}Xe [24, 25], and has set some of the most stringent limits on the half-life of the neutrino-less mode to date [23].

1.5 Outline

In the sections that follow, we describe the methods, results, implications, and future possibilities of the search for nucleon decay events in EXO-200. In Section 2, the EXO-200 detector, constraints to the analysis, and the method of fitting the low background data are described in detail. The result of the fit are provided in Section 3, and their interpretations are given in Section 4. The search for nucleon decays in EXO-200 is summarized in Section 5, and a variety of shortcomings of this search and other possibilities for future works are given in Section 6.

2 Methods

2.1 The EXO-200 Detector

2.1.1 Detector Description

The details of the EXO-200 detector relevant to nucleon decays are summarized here. A more complete description is given in [26].

The heart of the EXO-200 detector is a time-projection chamber (TPC) filled with liquid xenon (LXe). The LXe is enriched to $80.672\% \pm 0.14\%$ in the double-beta decay isotope, ^{136}Xe, with the remainder being predominantly ^{134}Xe, which is experimentally stable. The ^{136}Xe serves as both the nucleon decay source as well as the detector medium as it provides strong ionization and scintillation signals. A cylindrical copper vessel, about 40 cm in diameter and 44 cm in length contains the LXe and is divided into two separate TPCs that share a common cathode at the center of the vessel. The end caps of the vessel are two indentical anodes, each with two crossed wire grids and an array of large area avalanche photodiodes (APDs), the last of which are described in [27].

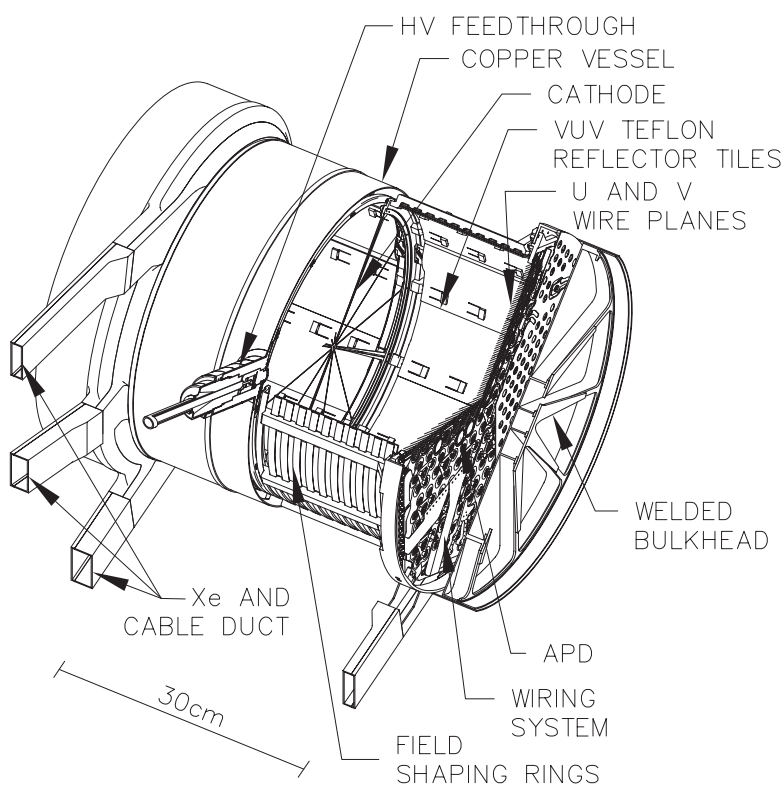

Figure 2.1: Cutaway view of the EXO-200 time-projection chamber.

One of the hallmarks of the EXO-200 detector is the utilization of both scintillation and ionization signals in the LXe. When energy is deposited in the LXe, both free ionization charge and 178-nm scintillation light

are produced. A uniform electric field drifts the free charge towards the nearest anode, where the charge is deposited on the crossed wire grids. The APD arrays collect and measure the scintillation light as well.

The wire grids are composed of two layers of wires crossed at 60°. The wires in the grid nearest the cathode are called the V-wires, and the second layer, which acts as the anode, are called the U-wires. The V-wires are spaced 6 mm above the anode, and the APD plane is 6 mm behind it (see Figure 2.2). Both the U- and V-wires are clustered in triplets of 3-mm pitch wires, and each grid consists of 38 triplets, for a total width of 342 mm. The APD arrays consist of 234 silicon devices, described in more detail in [27]

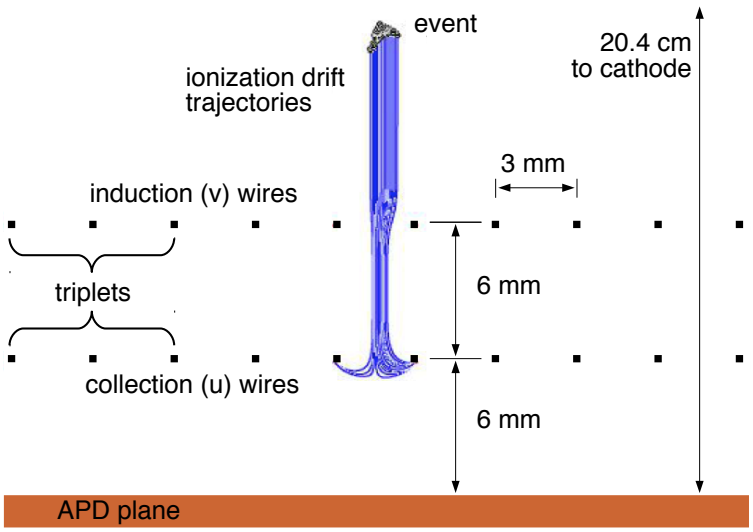

Figure 2.2: Layout of the U- and V-wire grids with respect to the APD plane viewed from the side. Note that the wire grids are actually at an angle of 60° with respect to each other.

The combination of crossed wire grids and scintillation signals allows full 3D reconstruction of events in the LXe. The crossing of the U- and V-wires allows measurement of two spatial coordinates of events, named U and V, which are then transformed into an orthogonal X-Y coordinate system for analysis. The drift time, calculated as the time between the scintillation signal and the charge deposition, is then used to calculate the Z coordinate of the event. This calculation uses a drift velocity, found to be 1.71 mm μs^{-1} [25]. The wire voltages corresponding to this drift velocity are described in more detail in [25].

The EXO-200 detector boasts extraordinarily low background, because of a combination of clean materials as well as extensive shielding from external sources. The purity of the liquid xenon itself is described in [25] and [26], as is the radioactivity of the copper vessel itself. The vessel is kept at a constant temperature and is shielded from γ radiation by a thermal bath, housed in a double-walled cryostat, which is then surrounded by over 25 cm of lead in all directions. This entire assembly is located within a Class-100 clean room surrounded by a cosmic ray veto system. The clean room is located underground, at the Waste Isolation Pilot Plant near Carlsbad, New Mexico, US, which further protects the detector from cosmic sources.

2.1.2 Data Acquisition

We briefly describe the data acquisition and event reconstruction methods relevant to the current work. A more thorough description is given in [25].

The detector signals are read out onto 76 U-wire channels, 76 V-wire channels, and 74 APD gang channels. These 226 hardware channels are combined with the muon-veto panel output and a high-voltage glitch detector by the fast data-acquisition (DAQ) system. The DAQ system digitizes the data at 1 μs^{-1} before feeding it into a trigger electronics module (TEM), which forms triggers to write the data to disk.

In a normal data collection run, four trigger conditions are used:

(a) individual U-wire triggers at 100 keV,

(b) APD individual triggers at $\sim$3 keV-4 keV,

(c) an APD sum trigger at $\approx$ 25 000 photons,

(d) solicited triggers at 0.1 Hz.

Item (a) above is for γ and β events in the detector, which are primarily the events of interest. Item (b) is for monitoring activity within the APDs. Item (c) is for α events in the LXe. The solicited triggers (Item (d) above) are used for timing information as well as for monitoring noise and detector performance. When one of the above trigger conditions is satisfied, the digitized data from all 226 hardware channels is saved to disk for the 1024 μs before and after the trigger.

2.1.3 Event Reconstruction

In the reconstruction stage, the digitized waveforms from the 226 hardware channels are analyzed to determine the energy, topology, and other information about the event. This stage is the same for both the real physics data as well as the data from Monte Carlo simulations described later in Section 2.1.4.

The digitized data contain waveforms (signal strength over time) for the 2048 μs of digitized information corresponding to each trigger. The first step of reconstruction is to extract this signal from the waveform on each channel in an event. Templates for the signal shapes have been derived for the U- and V-wire channels using simulation techniques described in [25]. For the APD channels, a simple step function is used. To find signals, which may not always be at the trigger time, both a matched filter as well as waveform unshaping are used. The prior utilizes the signal templates as well as transfer functions defined by the front-end electronics to search for and extract the signal part of the waveform. The latter utilizes the templates and functions to locate any additional peaks, as the matched filter is not equipped to find multiple signals on the same waveform. These processes are performed on all U- and V-wire channels separately, while the APD channels are summed together into two channels corresponding to the two APD planes before being analyzed.

After the signals have been identified and corrected (see Section 2.1.6), the amplitudes of the extracted waveforms are measured by fitting the filtered signals to the templates described above, and in [25]. The rise and fall times of the pulse, the pulse integral, χ^2 of the fit, and nearest neighbor amplitude are also calculated on the wire channels to help separate out induction signals from charge depositions (see [25] for more details).

Following parameter estimation, the signals from channels of the same type are sorted into "bundles." U-wire signals on adjacent channels are bundled together if they arrive within 3.5 μs. The bundle is then given a time calculated from the amplitude-weighted average of the U-wire signal times. V-wire signals are bundled in a similar manner, described in [25]. APD signals are bundled solely on whether or not they occur within 6 μs of each other, with the resulting scintillation bundle time coming from the energy-weighted average of the individual signal times as well.

After signals have been bundled, the resulting bundles are associated together and a fit is used to extract the 3D position of the resulting "cluster." U- and V-wire bundles are associated together to calculate 2D position using a least-likelihood fit method described in [25]. The resulting "charge clusters" are linked with their corresponding scintillation bundles to calculate the time difference and infer the Z-position. During

this stage, the clustering process may fail to associate one or more of the bundle types together because of an error or because one bundle type was under threshold. The resulting signals still have energy measurements associated with them, but it is impossible to reconstruct their full 3D position, thus these events are called "partially reconstructed." The effect of partially reconstructed events on the analysis is discussed later, in Section 2.3.3. The clustering process may also skip events completely if too many signals are found by reconstruction. Following [25], we adopt a 0.18% systematic uncertainty to account for these skipped events.

2.1.4 Monte Carlo Simulations

To understand the EXO-200 detector response to the signals resulting from nucleon decays, a comprehensive Monte Carlo simulation package is a necessity. Fortunately, such a simulation package designed specifically for EXO-200 exists and is described in detail in [25]. We recount the important constituents of the simulation package here.

The Monte Carlo simulation software designed for EXO-200 consists of two primary components. The first of these, designed using the Geant4 simulation package [28],[29], parameterizes the geometry of the EXO-200 detector and its surroundings. This stage also simulates events in the defined geometry and simulates the resulting energy depositions in the detector. The second component of the Monte Carlo system simulates the signals on the U-wire, V-wire, and APD channels as a result of the energy depositions in the detector. These simulations have been well studied for each individual wire and APD channels so that the results are directly comparable to real data [25]. Because the Monte Carlo simulates the signals on each individual channel, the Monte Carlo data are reconstructed in the same way as real data, as described in Section 2.1.3.

The Monte Carlo simulation described above is also used to simulate the detector response for a variety of sources and backgrounds. In particular, the effectiveness of the Monte Carlo simulations is checked by comparing source calibration data with simulations of the same sources in their correct positions, as described in Section 2.1.5. The agreement of simulated source data with real calibration runs is described in detail in [25]. In this analysis, we will use some constraints derived from source calibration data, described in Section 2.5.2. The Monte Carlo data are also used to generated the probability density functions (PDFs) of all background components arising in data collection, as well as the $2\nu\beta\beta$, $0\nu\beta\beta$, and nucleon decay components used in the final fit to low background data. See Section 2.2.2 for details on the generation of PDF components.

2.1.5 Source Calibrations

To calibrate the detector response to energy deposits, a variety of γ sources are periodically deployed and studied. These sources include ^{60}Co, ^{137}Cs, ^{228}Th, and ^{226}Ra, the last of which was deployed later in June 2013. See Table 2.1. The sources have been chosen to span the sensitive region of the EXO-200 detector. In particular, the ^{228}Th source is deployed every few days to monitor the electron lifetime and measure the energy response at the 2615-keV pair production peak from ^{220}Tl. The ^{137}Cs source has a γ-ray full-energy absorption peak at 662 keV and serves primarily to investigate the detector response at the energy threshold of 700 keV. The ^{60}Co features two γ peaks at 1.17 MeV and 1.33 MeV. Finally, the ^{226}Ra source features a multitude of peaks across the sensitive energy region of the detector and is discussed in more detail in [23].

Table 2.1: Table of sources used for calibration and agreement studies in EXO-200. Data for the first three sources, ^{60}Co, ^{137}Cs, and ^{228}Th is taken from [25]. With the exception of ^{226}Ra, the activities shown here represent values on September 1, 2009, but have been since verified by the EXO-200 collaboration. The ^{226}Ra source was deployed later, in June 2013, and its activity was verified by the EXO-200 collaboration [30]. The half-life of ^{226}Ra is taken from [21]. Additional sources with higher activity were also available but are not discussed within this work.

Source	Activity (Bq)	Half-life (yr)
^{60}Co	530 ± 6	5.27
^{137}Cs	2820 ± 33	30.1
^{228}Th	1417 ± 17	1.91
^{226}Ra	234.6 ± 2.7(syst.) $\pm$ 1.0(stat.)	1600 ± 7

During calibration runs, a source is deployed at one of several locations around the TPC vessel. The source locations are fixed by a copper guide tube built into the cryostat surrounding the TPC [25]. These positions are shown in Figure 2.3.

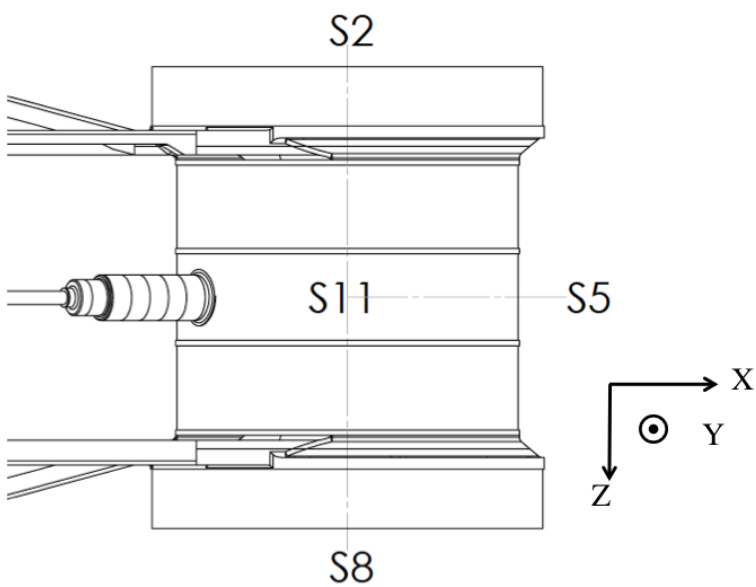

Figure 2.3: Positions used for source calibration studies around the TPC vessel, as shown from above. The coordinates of the source locations (X, Y, Z) are: S2 $= (0.0, 0.0, -29.5$ cm), S5 $= (25.5$ cm$, 0.0, 0.0)$, S8 $= (0.0, 0.0, 29.5$ cm), and S11 $= (0.0, 25.5$ cm$, 0.0)$. Also used but not shown is S17 $= (0.0, -25.5$ cm$, 0.0)$.

2.1.6 Position- and Time-based Corrections

EXO-200 utilizes several important corrections to the detector response based on the reconstructed positions of energy depositions. The most important of these are channel-based corrections, an APD light map correction, corrections to account for the electron lifetime, and shielding inefficiency corrections. All of these are discussed in some depth in [25]. We briefly discuss the first three corrections here.

The detector response in each channel is highly sensitive to the individual gain values of each U-wire, V-wire and APD gang. The gain values of the wires are periodically checked using both a charge-injection circuit, as well as calibration data from ^{228}Th. The APD gains are similarly monitored using an external

laser to measure the individual channel gains. The gain values are found to be quite stable, and any instability is accounted for in the systematic uncertainties adopted from [25].

Differences in the solid angle covered by each individual APD and their relative gain values create varying amounts of scintillation light collected channel-by-channel, depending on the location of the energy deposition. To correct for this position-dependence, a 3-dimensional "light-map" was created. The response of each APD gang to an energy deposition is scaled based on the deposition's reconstructed position. The relative values of the light map are derived from source calibration data, discussed in more detail in [25]. There, the implementation of the light map was shown to substantially improve the detector resolution for ^{228}Th source data.

The number of electrons drifting in the LXe from ionization can be attenuated by electronegative impurities. This exponential attenuation depends on the electron lifetime, τ_e, which is measured every few days using ^{228}Th source data at S5. This measurement is described in [25], where it is also shown that the time-variation of the electron lifetime is largely attributable to interruptions in the recirculation of the liquid xenon. With the measured values of the electron-lifetime, the ionization signals are corrected by a factor of $\exp(t/\tau_e)$, where t is the electron's drift time.

2.2 Data Analysis Strategy

To search for the appearance of the daughter isotopes of interest in the LXe, we perform a fit to the low background data, as is done in [25, 23].

The analysis exploits several advantages unique to EXO-200 in both the good energy resolution of the detector as well as its ability to topologically reconstruct events. In addition to cuts based on position, topological reconstruction allows us to distinguish between single- and multi-site events. As in previous EXO-200 analyses, we define an event as being "single-site" (SS) if the event is consistent with having all its charge deposits confined to a volume of characteristic dimension $\sim$ 2 mm-3 mm [25]. If the event is not single-site, it is labeled as "multi-site" (MS).

In addition to categorizing SS and MS events, the analysis takes advantage of each event's "standoff distance," which is defined as the shortest distance between any charge deposition and either an anode wire or a reflector surface [25]. Background γ events that originate in the detector materials tend to exhibit attenuation in the active LXe, and hence have distinguishable standoff probability distributions from events that originate uniformly throughout the detector volume.

Finally, we take advantage of increased resolution by combining scintillation and charge signals into a "rotated energy," as well as further improvement from a denoising algorithm The rotated energy is calculated by combining the charge and scintillation signals, taking advantage of the anti-correlation between the signal strength, to find an optimal "rotation angle" at which to combine the two. The effects of using a rotated energy are described in more detail in Section 2.2.1.

With the techniques described above in mind, we create probability density functions (PDFs) of the energy and standoff distance spectra (each divided into SS and MS events) for each signal and background source in the detector. These PDFs are then used to perform a simultaneous maximum-likelihood fit to all of the above variables. In order to create the PDFs, a Monte Carlo simulation of each possible signal or background source is utilized, and the relevant spectra for each of the above variables is extracted. The generation of the PDF components is described in more detail below, in Section 2.2.2. The fit model is discussed in detail in Section 2.5.

The fit to low background is performed for events having rotated energy (see Section 2.2.1) greater than 700 keV, and up to 9 800 keV. This lower bound on energy resolution is chosen to be as low as possible to maximize the total detection efficiency of each decay mode (see Section 2.3.2). The threshold has been well studied in [25], where it was shown that all channel types exhibited 100% signal-finding efficiency, regardless of the event position.

To maximize our understanding of the reconstructed data, we also restrict our analysis to events reconstructed within a fiducial volume of the TPC. Following [23], we utilize an expanded fiducial volume with respect to [25] to maximize our sensitivity to nucleon decay events. The fiducial volume is defined to include events with 182 mm $> |Z| >$ 10 mm, where $Z = 0$ is the cathode. In the X-Y plane, the events are restricted to a hexagon with 162-mm apothem. It should be noted that some regions of this hexagonal area lie outside the Teflon reflector panels. In this case, the event is required to lie within both the hexagonal area and within the circular area defined by the reflector panels. This fiducial volume contains 76.5 kg of ^{136}Xe, which corresponds to $N_{nucl} = 3.39 \times 10^{26}$ atoms of ^{136}Xe.

2.2.1 Rotated Energy and Resolution

One of the benefits of using liquid xenon as the detector medium is the microscopic anti-correlation between ionization and scintillation, as described in [31]. We illustrate this effect using a ^{228}Th calibration source at position S5 in Figure 2.4. The island in the upper right corner is the usual γ line from ^{208}Tl at 2615 keV in thorium. In order to optimize the energy resolution of the detector, the ionization and scintillation energies are combined to create a "rotated energy", E_R, defined as

$$E_R = E_S \sin(\theta^R) + E_I \cos(\theta^R) \tag{2.1}$$

where θ^R is the rotation angle, measured from the ionization energy (E_I) axis at zero to the scintillation energy (E_S) axis at 90°, as in Figure 2.4.

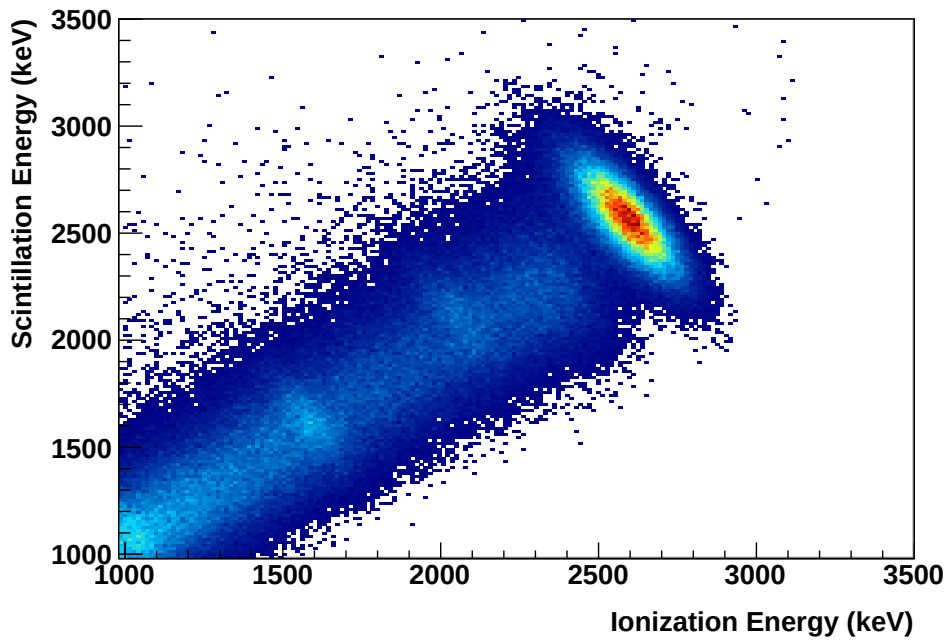

Figure 2.4: Plot showing the anti-correlation between charge and scintillation energy for single-site events from a ^{228}Th source at S5. The large grouping of events in the upper right corner belong to the usual γ peak at 2615 keV.

The benefits of using the rotated energy are discussed in detail in [25]. Briefly, the energy resolution of the ionization channel was found to be approximately constant in time, with a value of $\sigma/E = 3.5\%$ and 4% at 2615 keV for SS and MS events, respectively [25]. The scintillation-only energy resolution, however, varies appreciably with time. Because the scintillation energy resolution varies with time, the optimal rotation angle, θ^R also varies with time. The rotation angle is thus measured weekly using a ^{228}Th source, as described in [25], and the events' low-background data are calibrated as a function of their date.

Following [25], we define an energy-dependent resolution function

$$\sigma^2(E) = \sigma_{elec}^2 + b^2 E + c^2 E^2. \tag{2.2}$$

Here, σ_{elec} is the electronics noise contribution, $b^2 E$ represents statistical fluctuations in ionization and scintillation, and the quadratic term, $c^2 E^2$ is taken as a position- and time- dependent broadening term. The values used for this analysis are different for single-site and multi-site events, and are given in Table 2.2. The parameters used here are the same as in those used in [23] and were derived from a fit to calibration data taken during Run 2. The effects of both denoising and rotated energy are incorporated.

Table 2.2: Resolution parameters for single-site (SS) and multi-site (MS) events used in the energy-dependent resolution function (Eq. 2.2). These values are derived from a fit to calibration data during Run 2.

	σ_{elec} (keV)	b (keV$^{1/2}$)	c
SS	20.8	0.628	1.10×10^{-3}
MS	25.8	0.602	4.04×10^{-3}

2.2.2 Generation of Fit Components

The fit to low background is performed using the RooFit framework built into ROOT [32]. The final fit to data involves a maximum-likelihood fit to the number of each contribution to the observed energy spectrum. This fitting procedure will be described in detail in Section 2.5. The fitting requires probability density functions (PDFs) of each different component over both energy and standoff distance, each separated into SS and MS events respectively. To generate these PDFs, a Monte Carlo simulation of each background component present in the specified part of the detector is performed using the EXO-200 Monte Carlo described in Section 2.1.4. The result is a simulated energy and standoff distance distribution for each different component. To incorporate the detector response, each PDF is then smeared using the energy resolution function (Eq. 2.2) described above. The useage of these smeared PDFs is verified through comparison with source data, described in Section 2.1.5.

To simulate the occurrence of nucleon decays, we simulate the existence of the resulting daughter nucleus, as described in Table 1.1 uniformly throughout the LXe. The daughter nucleus is allowed to decay via the mechanisms built into the Geant4 decay package. Subsequent decays are also simulated as separate events, resulting in a simulated energy spectrum for the entire decay chain of each nucleus.

2.3 Event Selection and Efficiencies

In this section we describe the event selection requirements used for this analysis, borrowing heavily from [25] and [23]. The event selection criteria used are as follows. For an event to be selected for analysis, the event must

1. not be in coincidence with the 0.1 Hz solicited triggers, which are explicitly tagged by the DAQ system;
2. not be in coincidence with events tagged as noise;
3. not occur within 1 second of another TPC event;
4. not contain more than one reconstructed scintillation signal;
5. not begin within 120 μs of the end of the waveform trace;
6. be fully 3D reconstructed;
7. be reconstructed inside the fiducial volume (to be discussed below);
8. not exhibit a high light-to-charge ratio (to be discussed below);
9. contain total rotated energy > 700 keV.

Items (2) through (5) are the same as those presented in [25], and they have been described and studied in detail there. Item (8) is designed to exclude events that are α-like and is highly degenerate with the other criterion. The values used for this cut are the same as in [25], and, when excluding degenerate cuts, this criteria eliminates only a negligible number (about 35) events. The resulting efficiency and associated uncertainty for these items is given below in Table 2.3. Because this analysis utilizes a different fiducial volume than in [25] and a different energy threshold than [23], we recalculate the efficiencies related to the partial reconstruction, fiducial volume, and energy threshold cuts.

2.3.1 Fiducial Volume

Because we compute the lifetime corresponding to each nucleon decay mode using the amount of ^{136}Xe present in the fiducial volume, no efficiency corresponds to excluding events outside the fiducial volume. However, this cut does introduce uncertainty, primarily from position reconstruction uncertainties and from

Table 2.3: Table of the signal efficiency and associated uncertainties for different event selection criteria. With the exception of the partial reconstruction, fiducial volume, and energy threshold criteria, all numbers here are taken from [25].*The efficiency for measuring nucleon decay events related to the energy threshold depends on the Q values of the relevant daughter isotope decays. See Section 2.3.2.

Criteria	Signal Efficiency (%)	Uncertainty (%)
Solicited triggers	99.99	-
Noise	100	< 0.06
1 s coincidence	93.1	0.2
> 1 scintillation signal	100	$^{0.7}_{0.0}$
Partial reconstruction	—	11.37
Fiducial volume	—	3.76
Light-to-charge ratio	100	0.15
Energy > 700 keV	—*	0.4

the overall normalization of events fitted in the final analysis.

The position reconstruction uncertainty has been studied in detail for the analyses in [25] and [23]. in both of these works, the reconstructed position of a localized Monte Carlo source was examined and a 1.77% uncertainty was assigned bsed on the width of the spread in position. This spread was not observed to be position dependent, and therefore we take this same value as our intrinsic position uncertainty in the fiducial volume.

In addition to the intrinsic position uncertainty, we compare the source rate agreement between the expanded fiducial volume used in this analysis and that used in [25]. The source rate agreement is examined by comparing the number of events passing all selection criteria in both data and Monte Carlo, with the number of Monte Carlo events normalized to the known activity of the sources used for calibration. The agreement is then quantified as the fractional difference between the number of events, (Data − MC)/Data. The computed source rate agreements are given for a variety of sources below, in Table 2.4.

Here we present the rate agreement studies as computed for the 0ν analysis [23]. In this analysis, the rate agreement was computed both for the fiducial volume used in [25] and a fiducial volume larger than this analysis and in [23]. This larger fiducial volume is the same as this analysis, except that it includes 5 mm $< |Z| <$ 182 mm. The weighted average of the rate agreement was computed for each fiducial volume and the difference between the two averages was taken as an additional systematic uncertainty on the detector efficiency. The results of of the rate agreement studies, computed by the EXO collaboration, are given below in Table 2.4. The computed difference is found to be -1.99%. While the second fiducial volume is larger than the one used in this analysis, studies have shown this disagreement increases with larger fiducial volume [23], so we take this disagreement as a conservative estimate. As in [23], we conservatively assume full correlation with the fiducial volume uncertainty of 1.77%, giving a total systematic uncertainty on the detector efficiency with respect to the fiducial volume of 3.76%.

Table 2.4: Source rate agreement, computed as Data − MC/Data for the source runs in the November 2012 calibration campaign. The rate agreement was computed from 700 keV-3500 keV for the fiducial volume used in [25] (small volume) and a larger fiducial volume than used here (larger volume). The smaller fiducial volume is defined as 15 mm $< |Z| <$ 182 mm, with a hexagonal apothem of 153 mm, while the larger fiducial volume is 10 mm $< |Z| <$ 182 mm, with hexagonal apothem of 162 mm. The error bars shown include statistical uncertainties, but are dominated by uncertainties on the source position. The bottom row gives the weighted average of the source agreements, assuming Gaussian errors on all measurements.

Location	Source Type	Rate Agreement (small volume)[%]	Rate Agreement (larger volume)[%]	Difference (Col. 4 - Col. 3)[%]
S2	^{228}Th	$2.04^{+1.43}_{-0.72}$	$1.50^{+1.39}_{-0.67}$	-0.54
	^{60}Co	$1.44^{+1.40}_{-0.54}$	$1.52^{+1.35}_{-0.54}$	0.08
S5	^{228}Th	$-1.00^{+0.87}_{-1.27}$	$-3.23^{+1.04}_{-1.34}$	-2.23
	^{60}Co	$-4.85^{+1.58}_{-1.16}$	$-7.40^{+1.75}_{-1.29}$	-2.55
S8	^{228}Th	$-4.88^{+1.33}_{-1.00}$	$-4.72^{+1.28}_{-0.88}$	0.16
	^{60}Co	$-3.10^{+1.10}_{-1.01}$	$-3.04^{+1.07}_{-0.97}$	0.05
S11	^{228}Th	$-0.56^{+4.19}_{-3.23}$	$-6.12^{+5.18}_{-3.88}$	-5.56
	^{60}Co	$-2.01^{+4.96}_{-3.69}$	$-7.37^{+5.87}_{-4.36}$	-5.36
Weighted Average		-2.18 ± 2.41	-3.14 ± 3.56	-1.99

2.3.2 Energy Threshold

The 700 keV energy threshold (criterion 9), was chosen, following [25], to optimize both the signal efficiencies with regards to the nucleon decays, and to decrease systematic uncertainties resulting from disagreement between data and Monte Carlo at low energies. Unfortunately, as was the case in [20], any feasible analysis threshold makes a study of the tri-neutron (nnn) decay mode impossible, as its daughter,^{133}Xe, β decays with a Q-value of only 427.4 keV [21]. At such low energies, the efficiency of detecting scintillation events in EXO-200 drops off significantly, making analysis of such a decay very difficult. However, the remainder of the daughter isotopes decay with a Q-value $>$ 1100 keV, so a 700-keV analysis threshold does not further restrict our studies.

To estimate the efficiency of the 700 keV energy threshold on the search for each nucleon decay mode, we simulate the subsequent decays of the daughter nuclei using our Monte Carlo simulations (described in Section 2.2.2), then take the ratio of events above 700 keV to the total number of simulated events. The results are given below, in Table 2.5.

Table 2.5: Efficiencies of the various nucleon decay modes considered in analysis, with regards to the 700-keV threshold. Efficiencies are calculated based on the percentage of simulated events occurring above the analysis threshold, with uncertainties from both the simulation and the 700-keV line considered.

Decay	Daughter Nucleus	Threshold Efficiency (%)
n	^{135}Xe	18.6
p	^{135}I	49.4
nn	^{134}Xe	—
np	^{134}I	96.3
pp	^{134}Te	87.0
nnn	^{133}Xe	0.02
nnp	^{133}I	37.3
npp	^{133}Te	54.3
ppp	^{133}Sb	63.2

The uncertainty on this efficiency is taken as the uncertainty on the 700-keV line, which is estimated to be 0.4% from [25]. This number is estimated from the residual calibration uncertainty on the 662-keV γ line from a ^{137}Cs source.

2.3.3 Rejection of Partially Reconstructed Events

As described in Section 2.1.3, the clustering process is sometimes unable to properly associate one of the signal bundle types together, resulting in an event without full 3D position information. These events are said to be "partially reconstructed" and are excluded from the analysis by criterion 6. Rejection of events without full 3D position ensures that the fiducial volume cut, position-dependent corrections, and fit to the standoff-distance spectrum are applied correctly in the later analysis stages.

For pure beta-like events, such as $2\nu\beta\beta$ decays, the events are primarily single-site, and most are fully reconstructed ($93.9 \pm 0.2\%$ in [25]). However, the decay spectra of the daughter nuclei from nucleon decays are not pure β decay spectra and therefore have a lower proportion of single-site events and a significantly reduced number of fully reconstructed multi-site events.

In [25], the efficiency of the partial reconstruction cut was determined by performing a fit to the low background spectrum to determine the best-fit number of $2\nu\beta\beta$ decays with and without the cut on partially reconstructed events. As in [25], we will define the full 3D reconstruction efficiency as the ratio of the number of events passing all cuts over the number passing all cuts excluding the full 3D reconstruction requirement. In $2\nu\beta\beta$ decays, this ratio, determined to be $93.9 \pm 0.2\%$, was directly compared with the same ratio calculated directly from Monte Carlo simulations of the $2\nu\beta\beta$ decay process occurring uniformly throughout the liquid xenon, calculated to be 94.2%. In the case of nucleon decays, the best fit number of decays is strongly dependent on small fluctuations in the $2\nu\beta\beta$ spectrum and is not as reliable a measure of efficiency. Therefore, we instead use the number calculated directly from the Monte Carlo simulations of the nucleon decay PDFs. The results are given in Table 2.6.

Table 2.6: Full 3D reconstruction efficiencies for each nucleon decay mode. These efficiencies were calculated from the simulated PDFs of each nucleon decay process. The efficiency is defined as the ratio of the number of events passing all cuts, including the cut on partially reconstructed events, out of the number passing all cuts excluding the partial reconstruction cut.

Decay	Daughter Nucleus	3D Reconstruction Efficiency (%)
n	^{135}Xe	76.4
p	^{135}I	12.1
np	^{134}I	26.6
pp	^{134}Te	39.0
nnp	^{133}I	64.0
npp	^{133}Te	54.6
ppp	^{133}Sb	49.0

Because we cannot determine the 3D reconstruction efficiency for each nucleon decay mode by fitting the actual data, we instead estimate the uncertainty on this efficiency by calculating the fractional difference between data and Monte Carlo for $2\nu\beta\beta$ events, as is done in [25]. The uncertainty on the partial reconstruction efficiency is then taken to be the same for all nucleon decay modes, and is calculated as the average of the absolute value of the fractional difference between data and Monte Carlo integrated over the $2\nu\beta\beta$ spectrum, from 700 keV to 2450 keV. This average is calculated to be 11.37%.

2.3.4 Total Detection Efficiency

All the efficiencies given above, summarized in tables 2.3, 2.5, and 2.6, can be combined to give the overall detection efficiency, $\epsilon_{\Delta E}$, for each isotope mode. This efficiency gives the total percentage of nucleon decay events we expect to observe in the analyzed fiducial volume, and is used in calculating the corresponding lifetime of each decay mode. The total efficiencies are given below, in Table 2.7. The uncertainty on the efficiency is independent of decay mode, and found to be 12.00%, combining the uncertainties in Table 2.3. This uncertainty contributes to the systematic uncertainty, discussed in Section 2.4.

Table 2.7: Total detection efficiencies for each nucleon decay mode. These efficiencies combine the efficiencies from all of the event selection criteria, including both the energy threshold and partial reconstruction cuts, which differ for each mode.

Decay	Daughter Nucleus	Detection Efficiency ($\epsilon_{\Delta E}$, %)
n	^{135}Xe	13.2
p	^{135}I	5.6
np	^{134}I	23.7
pp	^{134}Te	31.6
nnp	^{133}I	22.2
npp	^{133}Te	27.6
ppp	^{133}Sb	28.8

2.4 Summary of Systematic Uncertainties

The primary contributions to the systematic uncertainty on our study come from the measured uncertainties on the detection efficiency, described in Section 2.3. This uncertainty, found to be 12.00%, is dominated by the fiducial volume uncertainty (3.76%, Section 2.3.1) and the partial reconstruction uncertainty (11.37%, Section 2.3.3).

In addition to the uncertainty on the detection efficiency, several other parameters contribute systematic uncertainties to our measured value of nucleon decays. These components include simulation model inaccuracies, a DAQ related issue, the possibility of an incomplete background model, and xenon-enrichment uncertainties, all of which are discussed in detail in [25]. We also include a systematic uncertainty associated with the beta-scale, which was fixed in [25], but is allowed to float in this analysis (see Section 2.5.4). The total contribution from all these uncertainties is 0.58% [25]. Combined with our calculated uncertainty from event selection cuts, the total systematic uncertainty is 12.01%.

2.5 Fit to Low-Background Data

2.5.1 Fit Model

The fit to low-background data uses a simultaneous fit to both the single-site and multi-site data sets for both energy and standoff distance using a binned maximum-likelihood method, using the PDFs derived for each background component. The low background data is binned for energies 700 keV to 9 800 keV, with bin sizes of 14 keV (650 energy bins), and the standoff distance for distances 0 to 200 mm, with 10 mm bin widths. Following [25], the negative log-likelihood function is defined as

$$-\ln L = \sum_i \left[\left(\mu_i^{SS} + \mu_i^{MS}\right) - \left(k_{\mathrm{obs},i}^{SS} \ln \mu_i^{SS} + k_{\mathrm{obs},i}^{MS} \ln \mu_i^{SS}\right) \right] + G_{\mathrm{const}} \tag{2.3}$$

where the sum is over all 13 000 bins in energy and standoff distance space, $k_{\mathrm{obs},i}^{SS(MS)}$ is the number of SS (MS) observed in bin i, and $\mu_i^{SS(MS)}$ is the expected number of SS (MS) events from the fit model in bin i. The last term, G_{const} represents a term arising from Gaussian constraints applied to the fit, discussed in Section 2.5.2. The computation of each μ_i is discussed in more detail in [25].

In this analysis, the fit to low-background data consists of all the PDF components described in [25] as well as those added in [23] and the additional nucleon decay component relevant to this search. The full list of components is:

- $2\nu\beta\beta$
- $0\nu\beta\beta$
- radiation from the copper vessel (^{238}U, ^{232}Th, ^{40}K, ^{60}Co, ^{65}Zn, and ^{54}Mn
- backgrounds in the liquid xenon (^{135}Xe, ^{137}Xe, and ^{222}Rn)
- backgrounds in the air gap between the cryostat and lead wall (^{222}Rn)
- a "far source" ^{232}Th PDF
- neutron-capture-related components, including ^{136}Xe neutron capture in the LXe, ^{1}H neutron capture in the HFE cryofluid, and ^{63}Cu, ^{65}Cu neutron capture in the copper components of the detector.

As in [23], the neutron-capture-related PDFs are combined into a single component. See [25] and [23] for more details on the individual components.

2.5.2 Constraints

The fit to low-background data utilizes several Gaussian constraints to improve the quality of the best-fit number of nucleon decays. These include a constraint on the radon activity in the background model, a constraint on the overall normalization, and a constraint on the single-site fraction of each PDF component. The last of these will be described in detail in Section 2.5.3. Each constraint contributes an additional constraint term, G_{const}, to the log-likelihood function, Eq. 2.3. This term is defined as

$$G_{\text{const}}(\boldsymbol{\rho}, \boldsymbol{\rho}_0, \boldsymbol{\Sigma}) = 0.5(\boldsymbol{\rho} - \boldsymbol{\rho}_0)^T \boldsymbol{\Sigma}^{-1} (\boldsymbol{\rho} - \boldsymbol{\rho}_0), \tag{2.4}$$

where $\boldsymbol{\rho}$ is the vector of constrained parameters, $\boldsymbol{\rho}_0$ is the set of expectation values for each parameter, and $\boldsymbol{\Sigma}$ is the covariance matrix for the set of parameters. This method is adapted from [25]. In the case of uncorrelated parameters, ρ_i, the constraint takes the form

$$0.5\left(\frac{\rho_i - \rho_{i,0}}{\sigma_i}\right)^2 \tag{2.5}$$

where $\rho_{i,0}$ is the expected value of ρ_i, and σ_i is the associated uncertainty.

Following [25], we constrain the background contributions from Rn in the active xenon, ^{214}Bi on the cathode, and Rn in the inactive xenon. These constraints are derived from the measured number of ^{222}Rn decays as a function of time, which are found to occur at a rate of 3.65 ± 0.37 μBq kg^{-1}. See [25] for details on the derivation of this constraint.

The effects of neutron-capture in the detector have also been well studied, allowing us to incorporate an additional constraint on these components. The simulations modeling the relative rates of neutron capture are discussed in more detail in [23]. As discussed above, the neutron-capture components of the background are combined into a single PDF, and the relative rates of the individual neutron-capture components are allowed to float within 20% of their estimated values from simulations. The total rate of neutron capture, however, is allowed to float unconstrained.

Finally, the overall normalization, N, is allowed to float within the estimated systematic uncertainties, as in [25] and [23]. The total systematic uncertainty is described in Section 2.4, and is found to be 12.01%. From Eq. 2.5, this constraint adds the term $0.5([N-1]/0.1201)^2$, to the total negative log-likelihood function, Eq. 2.3.

2.5.3 Single-Site Fraction Agreement

Following [25], [23], we define the fraction of SS events, or the SS fraction, as SS/(SS + MS), where SS and MS are the number of SS and MS events respectively. This fraction is calculated using both Monte Carlo simulations and source calibration data and is used as a check on our simulations' effectiveness. The SS fraction is then computed in each energy bin over the analysis region.

We compute the SS fraction agreement for each of the sources ^{228}Th, ^{60}Co, and ^{226}Ra, each at the S5 position. The results are plotted in Figure 2.5. Energy ranges at the tail end of each spectra, where there are fewer events, suffer from lower statistics, and thus a higher fractional difference and uncertainty between data and Monte Carlo. For this reason, we plot only the ranges 700 keV to 2650 keV for ^{228}Th, 700 keV to 1360 keV for ^{60}Co, and 700 keV to 2350 keV for ^{226}Ra. Bin widths are varied between the sources, but other bin sizes have also been checked to ensure that the behavior is not a result of cancellations.

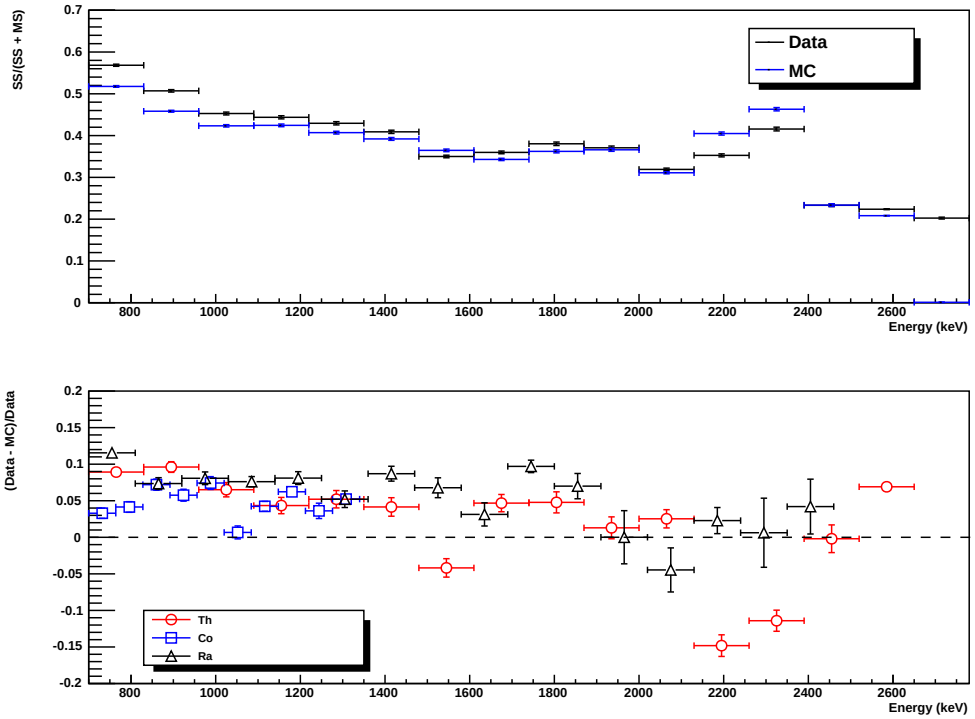

Figure 2.5: Top: single-site (SS) fraction (SS/(SS+MS)) as a function of energy for Data and Monte Carlo (MC) for a ^{228}Th source near the cathode (S5). Bottom: The fractional difference between the SS fraction from data(shown in top) and the calculated SS fraction in Monte Carlo of the same three sources. The maximum fractional difference for each source is used to calculate a weighted average, which is applied as a systematic uncertainty and a constraint in the final fit. As discussed in the text, only bins fully within the expected energy spectra of the corresponding source are included. Because the energy ranges vary, different bin widths were used for each source. The widths shown above are 64 keV for ^{60}Co, 130 keV for ^{228}Th, and 110 keV for ^{226}Ra

All three sources exhibit the same energy dependence – the lower-energy events tend to be more single site, while the higher-energy events are predominantly multi-site. Additionally, we can see that the fractional difference between data and Monte Carlo doesn't seem to have any major dependence on the energy or type of source.

Based on the fractional difference between data and Monte Carlo, we calculate the weighted average of the maximum deviations observed for the ^{228}Th, ^{60}Co, and ^{226}Ra sources at S5. This average, calculated to be 10.808%, is taken as a systematic uncertainty and is also used as a constraint on the fit to low background, to be discussed in Section 2.5.2. This average is slightly higher than that found in [23] because of the lower energy threshold used in this analysis. In particular, the highest deviation for the ^{226}Ra source came between 700 keV and 810 keV, which was below the 980 keV threshold used in [23].

2.5.4 Profile Scans and Floating the Betascale

Because the best-fit number of nucleon decays in each mode is sensitive to small changes in the $2\nu\beta\beta$ decay spectrum, our results are very sensitive to small energy-scale differences between β-like and γ-like events in the detector. Following [23], we define the "β-scale," B, as $B = E_\beta/E_\gamma$, where E_β and E_γ are the energies of β and γ depositions respectively. EXO-200 does not have access to a line-β source, and therefore, has no

way to determine the physical value of the β-scale. As such, we take B to be a measured parameter. In [23], a best-fit value of $B = 0.999 \pm 0.002$ was determined and used for their analysis. This value was found to be independent of energy threshold, and other studies showed that the β-scale does not exhibit any noticeable energy dependence.

With respect to [23], this analysis incorporates an additional β-like PDF component for each nucleon decay mode, which could shift the best fit value of B in the final result. To make our search sensitive to changes in the best-fit value of the β-scale, we manually float the value of B for each nucleon decay fit.

During the fit, we perform a profile scan over the number of nucleon decay related events. This scan is performed by stepping through a range of values of the number of nucleon decay related events. At each value, the number of nucleon decay events is fixed, the rest of the PDFs are fit to the low background data, and negative log-likelihood value of the fit is calculated. The result is a "profile curve", over the number of nucleon decay related events, which has a minimum at the best fit value of the number of nucleon decays.

In order to properly account for the systematic uncertainty resulting from this uncertainty in B, the profile scan above must be performed in two-dimensions. At each fixed value of the number of nucleon decay events, the fit is performed multiple times with a betascale value ranging between 0.994 and 1.006 in steps of 0.001. The one-dimensional profile curve from which the results are extracted is then found by minimizing the negative log-likelihood value as a function of the betascale for each fixed value of the number of nucleon decays. This procedure results in a broadening effect on the profile curve, which accounts for the systematic uncertainty related to an unconstrained betascale value.

3 Results

Here, we present the results of our best fit to the low-background data for each nucleon decay mode considered, using the fit model described in Section 2.5.1. For each decay mode, we also performed a profile likelihood scan, calculating the negative log-likelihood value of the fit using different values of the number of nucleon decays around the best fit value, and incorporating the betascale as described in Section 2.5.4.

To determine the 90% confidence interval, the distribution in likelihood ratio, $-2\log\lambda = 2(NLL - NLL_0)$, (where NLL_0 is the negative log-likelihood at best-fit value) is generated via a profile scan, as described in 2.5.4. We then use Wilk's theorem [33] to approximate this distribution by a χ^2 distribution having degrees of freedom equal to the difference in dimension of the two parameter spaces, in this case 1.

In each of the following sections, we present the best fit to the low-background data for each of the nucleon decay modes and the associated one-dimensional profile curve for the number of nucleon decays. The 90% confidence interval is extracted, and the resulting lower limit on the lifetime for that decay mode is derived. The data fit in this experiment included a live-time of 1.34 years, and the active liquid xenon, enriched to $80.672 \pm 0.14\%$ in ^{136}Xe, corresponds to 3.39×10^{26} nuclei of ^{136}Xe.

3.1 Results for N Decays

The disappearance of n and p were searched for via the decays of ^{135}I and ^{135}Xe in the active LXe respectively.

For n disappearance, we searched for decays of ^{135}Xe in the active liquid xenon. The corresponding profile scan over the number of ^{135}Xe decays is shown in Figure 3.1a. Based on the profile scan, the 90% confidence-limit (CL) value of n decays is found to be 3094.36. Using Eq. 1.1 with our calculated efficiency ($\epsilon_{\Delta E} = 13.22\%$, Table 2.7), $N_{\text{eff}} = 32$, given in Table 1.2, and the ^{136}Xe exposure quoted above, corresponds to a lower limit on the lifetime of n disappearance of $\tau_n \geq 6.2 \times 10^{23}$ years at the 90% CL. Note that some ^{135}Xe is to be expected in the active liquid xenon because of neutron-capture processes on the ^{134}Xe that makes up $\sim 20\%$ of the xenon mass, as well as photonuclear interactions on the ^{136}Xe. In this work, it was cautiously assumed that all the ^{135}Xe found in the active LXe was a result of n disappearance, making this limit extremely conservative.

The same method was used to search for p disappearance via the presence of ^{135}I in the liquid xenon. The profile scan over the number of ^{135}I decays, shown in Figure 3.1b, yields 67.73 decays at the 90% CL. Alongside the other parameters measured for ^{135}I, ($\epsilon_{\Delta E} = 5.56\%$ and $N_{\text{eff}} = 26$) the resulting lower limit is set at $\tau_p > 9.7 \times 10^{24}$ years at the 90% CL.

3.2 Results for NN Decays

The disappearance of np and pp pairs were searched for via the decays of ^{134}I and ^{134}Te in the active liquid xenon, respectively. The disappearance of an nn pair is also theoretically motivated, but was deemed inaccessible in this work, because of the stability of the ^{134}Xe nucleus.

For np disappearance, the profile scan over the number of ^{134}I decays, shown in Figure 3.2a, yields a value of 160.32 decays at the 90% CL. The calculated efficiency was, $\epsilon_{\Delta E} = 23.74\%$, (Table 2.7, and the effective number of nuclei that can participate in the decay is $N_{\text{eff}} = 2$. Using Eq. 1.1, these values correspond to an

experimental lower limit of $\tau_{np} > 1.3 \times 10^{24}$ yr for *np* disappearance at the 90% CL.

For *pp* disappearance, the profile scan for ^{134}Te decays in the active LXe, shown in Figure 3.2b, yields a value of 526.36 decays at the 90% CL. An efficiency of $\epsilon_{\Delta E} = 31.59\%$ was found (table 2.7), and the effective number of nuclei participating in the hypothetical decay for *pp* disappearance in ^{136}Xe is $N_{\text{eff}} = 7$. These values correspond to a lower limit of $\tau_{pp} > 1.9 \times 10^{24}$ years for *pp* disappearance at the 90% CL.

3.3 Results for NNN Decays

The disappearance of *nnp*, *npp*, and *ppp* triplets in ^{136}Xe were searched for via the decays of ^{133}I, ^{133}Te, and ^{133}Sb in the active LXe respectively. The *nnn* decay is also of interest but was inaccessible in this work, because the Q value of ^{133}Xe beta-decay is below the experimental energy threshold used here. For all of the NNN modes, N_{eff} was cautiously assumed to be 1, as was done in [20].

The disappearance of an *nnp* triplet was searched for via the decays of ^{133}I in the active liquid xenon. The profile scan, shown in Figure 3.3a, yields 673.09 decays at the 90% CL. The efficiency was found to be $\epsilon_{\Delta E} = 22.22\%$. These values correspond to an experimental lower limit of $\tau_{nnp} > 1.5 \times 10^{23}$ yr for *nnp* decays at the 90% CL.

For *npp* disappearances, decays of ^{133}Te were searched for in the active LXe. Based on the profile scan shown in Figure 3.3b, an upper limit of 1222.98 decays at the 90% CL was found. The efficiency of detecting ^{133}Te decays was $\epsilon_{\Delta E} = 27.61\%$. With the quoted exposure, a lower limit the lifetime of *npp* disappearances of $\tau_{npp} > 1.0 \times 10^{23}$ years is found at the 90 % CL.

Finally, the disappearance of a *ppp* triplet was searched for via the decays of ^{133}Sb in the active LXe. Fitting the low-background data returned a value of 538.05 decays at the 90% CL from the profile scan shown in Figure 3.3c. The calculated detection efficiency was found to be $\epsilon_{\Delta E} = 28.84\%$. With $N_{\text{eff}} = 1$ for *ppp*, and the quoted exposure, a lower limit of $\tau_{ppp} > 2.4 \times 10^{23}$ years for *ppp* disappearance is set at the 90% CL.

3.4 Summary of Experimental Results

The preceeding sections give lower bounds for the lifetime of all single, double, and triple nucleon disappearance modes, with the exception of the *nn* and *nnn* channels. The results are summarized in Table 3.1.

Table 3.1: Summary of the lower limits obtained for the lifetime of the disappearance of each set of nucleons, given at the 90% confidence limit.

Decay	Daughter Isotope	Lifetime Lower Limit (yr)
n	^{135}Xe	6.2×10^{23}
p	^{135}I	9.7×10^{24}
nn	^{134}Xe	—
np	^{134}I	1.3×10^{24}
pp	^{134}Te	1.9×10^{24}
nnn	^{133}Xe	—
nnp	^{133}I	1.5×10^{23}
npp	^{133}Te	1.0×10^{23}
ppp	^{133}Sb	2.4×10^{23}

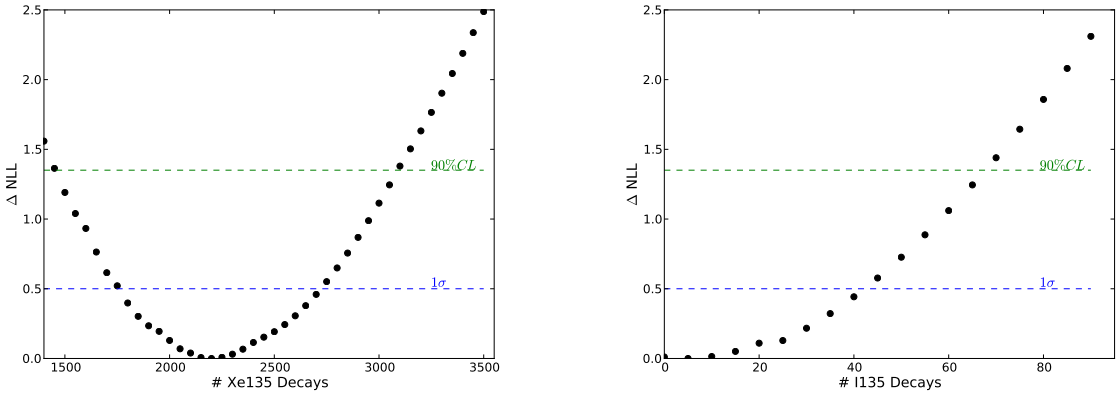

(a) (b)

Figure 3.1: Profile scan for the number of ^{135}Xe (a) and ^{135}I (b) decays in the active liquid xenon. The lines correspond to 1σ (green) and 90% CL (blue). The vertical axis shows the negative log-likelihood of the fit for the corresponding number of ^{135}Xe or ^{135}I decays, relative to the minimum value obtained by the best fit. The intersections with the horizontal lines were found via a fourth-degree polynomial fit to the points in the profile.

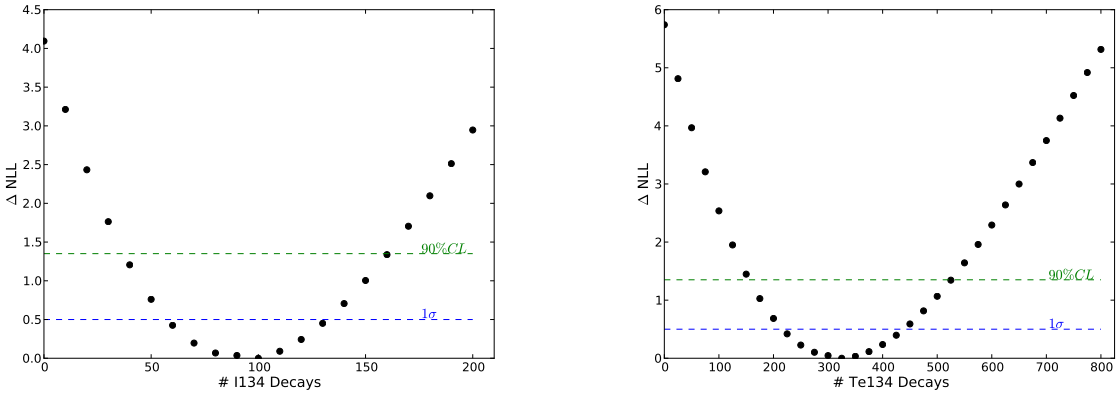

(a) (b)

Figure 3.2: Profile scan for the number of ^{134}I (a) and ^{134}Te (b) decays in the active liquid xenon. The lines correspond to 1σ (green) and 90% CL (blue). The vertical axis shows the negative log-likelihood of the fit for the corresponding number of ^{134}I or ^{134}Te decays, relative to the minimum value obtained by the best fit. The intersections with the horizontal lines were found via a fourth-degree polynomial fit to the points in the profile.

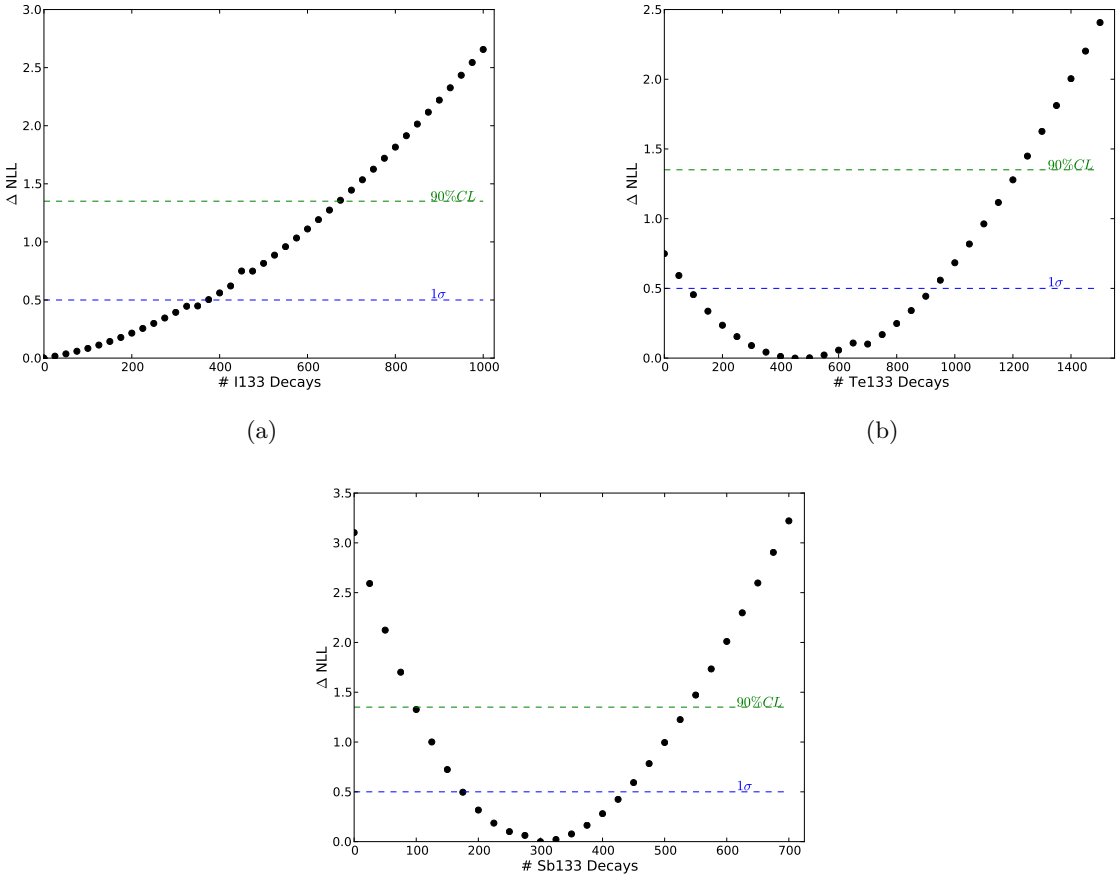

Figure 3.3: Profile scan for the number of ^{133}I (a), ^{133}Te (b), and ^{133}Sb (c) decays in the active liquid xenon. The lines correspond to 1σ (green) and 90% CL (blue). The vertical axis shows the negative log-likelihood of the fit for the corresponding number of ^{133}I, ^{133}Te, or ^{133}Sb decays, relative to the minimum value obtained by the best fit. The intersections with the horizontal lines were found via a fourth-degree polynomial fit to the points in the profile.

4 Discussion

The results of the search for nucleon decays in EXO-200 are summarized in the previous section. The profile scans for ^{135}I and ^{133}I, Figures 3.1b, 3.3a were completely consistent with zero nucleon decay events, far below 1σ. The profile scan for ^{133}Te too, is consistent with no ^{133}Te nuclei being present in the active LXe, far below the 90% level, and the best fit can safely be interpreted as a statistical fluctuation. The profile scan for ^{135}Xe was consistent with a large number of ^{135}Xe nuclei being present in the active liquid xenon, but this should not be interpreted as evidence for nucleon decay events, as the presence of ^{135}Xe is expected because of neutron capture on the ^{134}Xe and photo-nuclear events on the ^{135}Xe events, as discussed previously.

While the other profile scans, for ^{134}I, ^{134}Te, and ^{133}Sb were not consistent with zero, we do not interpret them as evidence for nucleon decays. Similar to the discussion in [34], there is a larger uncertainty on the number of $2\nu\beta\beta$ decays in the active LXe because of a larger fiducial volume and correlation between the nucleon decay components and the $2\nu\beta\beta$ components. Because even the largest number of nucleon decay events constitutes only a small fraction of the over 81500 $2\nu\beta\beta$ events fit in the data, we can safely interpret our results as consistent with no nucleon decay events having occurred.

Based on the confidence intervals extracted above, lower limits on the lifetime of each hypothetical decay mode have been determined, which can be compared directly with those determined by [19], [20], and [18]. The comparison is summarized in Table 4.1.

The limits derived above are possibly more stringent because they do not take into account some systematic uncertainties related to the inclusion of extra β-like PDFs in the fit. In particular, as discussed in [34], uncertainties related to the remote background model and the possibility of other β emitting backgrounds should be considered. In the background model, several additional remote backgrounds contributed energy spectra that were degenerate with the PDFs already included in the fit. To ensure that the fit converges, these additional background PDFs were excluded. Studies have shown that the inclusion of these models does not appreciably affect the results of the fit, but a more in depth study of the systematic uncertainty with regards to this background should be performed, and this uncertainty should be included in the total systematic uncertainty used here. Additionally, while cross-checks were performed to ensure that the fit was robust against the presence of additional background sources in [23] and [34], these cross-checks should be

Decay Mode	Previous Best Limit (yr)	Previous Work	EXO-200 Limit (yr)
n	1.8×10^{25}	BOREXINO	6.2×10^{23}
p	1.1×10^{26}	BOREXINO	9.7×10^{24}
nn	4.9×10^{25}	BOREXINO	–
np	3.2×10^{23}	DAMA/LXe	1.3×10^{24}
pp	5.0×10^{25}	BOREXINO	1.9×10^{24}
nnn	–	–	–
nnp	1.4×10^{22}	DAMA/LXe	1.5×10^{23}
npp	2.7×10^{22}	DAMA/LXe	1.0×10^{23}
ppp	3.6×10^{22}	DAMA/LXe	2.4×10^{23}

Table 4.1: Comparison of the previous best lifetime limits on nucleon decays independent of decay mode, for all single, double, and triple nucleon decay modes.Results from the BOREXINO counting test facility are taken from [18], and results from DAMA/LXe are taken from [20]. For the *np*, *nnp*, *npp* and *ppp* modes, this work gives the most stringent limit to date.

re-performed with the nucleon decay PDFs included. These studies will also contribute a small systematic uncertainty, which must be included in the final fit. The resulting profile scans would then include a broadening effect as a result of the weaker constraint on the overall normalization. As a result of this broadening, the maximum value of the number of nucleon decays at the 90% confidence limit would likely be increased, resulting in lower limits on the lifetime of each nucleon decay process.

Another source of uncertainty arises from uncertainty in the β-scale. The fitting procedure described in Section 2.5 labels a PDF as either γ-like or β-like (α events are removed from consideration by selection criteria 8, see Section 2.3), and then applies the β-scale only if the PDF is β-like. The depositions from nucleon decay related events are largely a result of the β decays of the corresponding daughter isotopes, but there are contributions to the energy spectra from γs emitted during the decay chain. Because the events related to each isotope decay are treated in a single PDF, this means the β-scale is applied even to γ events in this spectrum. This effect is expected to be small because the location of the γ line is already smeared by the detector resolution, but it does contribute an additional effect to the PDFs that has not been carefully studied.

Of the modes considered, the most stringent lifetime limits set in this analysis were the p, np, and pp modes, (involving ^{135}I, ^{134}I, and ^{134}Te respectively). In particular, the number ^{134}I decays were fit with relatively high precision – the best fit value was 92.16, and the 90% limit was only at 159.75 (See Figure 3.2a). This is likely because the nuclear β decay of ^{134}I has a Q-value of 4.175 MeV (see Table 1.1), which is much higher than that of the $2\nu\beta\beta$ signal - the dominant background in EXO-200.

However, ^{133}Sb also has a high Q-value for it's β decay (4.00 MeV), but the profile scan over the number of ^{133}Sb decays still yielded up to 538.05 decays at the 90% confidence limit. It's possible that this broadening in the profile for ^{133}Sb is due in part to a large number of it's PDF being built from events attributable to the decay of the daughter ^{133}Te, following the initial β decay of ^{133}Sb. The β decay of ^{133}Te has a Q-value of 2.92 MeV, making it's decay spectrum somewhat degenerate with that of the $2\nu\beta\beta$ signal (which has a Q-value of 2.457 MeV [35]). This degeneracy makes it difficult to distinguish the two PDFs in fitting, and is likely responsible for the higher bound on the number of nucleon decay related events in both of these modes.

5 Conclusions

A search for the decay of nucleons in ^{136}Xe has been performed using data from the EXO-200 detector. The search included 447.6 ± 0.01 days of low-background data, with a mass of xenon corresponding to 3.39×10^{26} ^{136}Xe nuclei. Nucleon disappearances were searched for via the presence of the resulting daughter nuclei after the decay, allowing a search independent of the products of the nucleon's decay or its mechanism for disappearance. The simultaneous decay of two or three nucleons was also considered, giving a total of seven different possible decay modes.

To search for the decays, a likelihood fit to the low-background data was performed, using probability density functions derived from Monte Carlo simulations. The fitting distinguished between single-site and multi-site events to differentiate β and γ depositions. The fit was also performed simultaneously for both energy and standoff distance to distinguish events occurring within the LXe from background originating in the detector materials. Events having rotated and calibrated energy over 700 keV were considered. The effectiveness of the Monte Carlo simulations has been verified by previous works [25, 23, 34] and through calibration studies described in this work. These simulations also helped derive constraints on the fitting related to the fraction of single-site events, the rate of events in the detector, and backgrounds from neutron capture and radon.

The results of the search do not present evidence to claim discovery of nucleon decays, but the results do provide lower limits on the lifetimes of these decays, should they exist. To derive these lifetime limits, a profile scan was performed over the number of nucleon decay events, giving a 90% confidence upper limit on the number of decays. The lifetime of the decay process was then inferred, assuming that all the decays at this upper limit corresponded to nucleon decay events. The derived limits are very conservative, as some number of decay events are expected from neutron captures processes, photo-nuclear interactions, and other cosmogenic backgrounds. Nevertheless, competitive limits for the invisible decay processes were obtained for all processes. These include the most stringent lower limits to date on the tri-nucleon decay processes *nnp*, *npp*, and *ppp*, as well as the di-nucleon decay process *np*. The results are in good agreement with those found by the DAMA/LXe collaboration, which also performed a search in ^{136}Xe.

6 Future Work

Future data taking is forseen and will increase the EXO-200 detector's sensitivity to all of the decay modes considered in this analysis. The next-generation neutrino-less double-beta decay experiment, nEXO, will also offer a tremendous increase in sensitivity through a higher xenon mass. Provided the larger detector can keep backgrounds to a level comparable to EXO-200, the scaling of the detector mass will directly increase the sensitivity to the decay modes considered in this analysis.

A better understanding of all the background components and systematic uncertainties will allow for a tighter confidence interval on the best fit number of nucleon decays in each mode. A variety of backgrounds from different detector components create degenerate energy spectra, and because of the way fitting is performed, such degeneracies in the energy spectra make it difficult for a fit to converge. In many cases these degenerate background spectra were combined into a single PDF to circumvent this difficulty, and an appropriate systematic uncertainty was adopted in [25, 23].

In this analysis the presence of any of the isotopes added to the fitting was cautiously assumed to indicate nucleon decays. In reality, many of these isotopes are produced via photo-nuclear interactions, neutron capture processes, and other cosmogenic backgrounds. Many of these backgrounds can be constrained by existing Monte Carlo simulations. With such a constraint, the expected number of nucleon decay-related events could be subtracted from the fit, improving the lifetime limits or providing stronger evidence of detection. As in [20], the effective number of nuclei, N_{eff} contributing to the tri-nucleon decay processes were also cautiously assumed to be 1 in each case. A theoretical calculation of N_{eff} does not exist currently but could be performed in principle. If N_{eff} was found to be greater than 1 in any case, the limits on the lifetime of that process would be increased by a corresponding multiplicative factor.

Other possibilities for increasing the sensitivity using the current data exist as well, particularly in the form of coincidences with the prompt decay signal from nucleon decays and the resulting daughter isotope decays. As described in Section 1.3, a nucleon decay would in general leave the remaining nucleus in an excited state, from which it would decay via γ emission, provided that the excitation energy is not large enough to break apart the nucleus. Depending on the theoretical model considered, the energy of the excited state and thus the energy of the emitted γ could be predicted. The addition of a line γ source in the energy spectrum of the nucleon decay PDF would differentiate the nucleon decay spectrum from other background PDFs and could allow fitting to make a much more precise prediction of the number of nucleon decay-related events.

In future analyses, considering only fitting events higher than the Q-value of $2\nu\beta\beta$, where the background in EXO-200 is relatively low, might be beneficial. Such a search would be sensitive only to the p, np, npp, and ppp modes but could yield much more stringent limits than those found with the energy spectrum considered here. Limits on most decay modes could also potentially be improved by considering a higher energy threshold. While the efficiency of the energy threshold cut would be lower at higher energies, other analyses using data from EXO-200 have demonstrated significantly reduced systematic uncertainties related to the background and Monte Carlo with energy thresholds of 980 keV [23, 34]. Since most of the β decay processes searched for here have Q-values higher than 1 MeV (see Table 1.1), it's possible that the losses in efficiency would be more than compensated for by a tighter profile curve and tighter bound on the number of nucleon decay-related events.

7 Acknowledgments

The author acknowledges the great deal of help and support from Professor Liang Yang. Professor Yang not only provided nucleon decays as a possible project, but was encouraging in allowing me to choose a project that I was most interested in and letting me run with it as much as I pleased. That being said, I wouldn't have been able to accomplish as much as I did on this project without his constant feedback and support.

I'm also indebted to my EXO-200 colleagues, especially those in the Illinois group. Michal Tarka, Josiah Walton, and Ying-Ting Lin have all been very supportive and offered me a great deal of feedback and help throughout the course of the project. Outside of Illinois, Igor Ostrovskiy, Dave Moore, Alexis Schubert, Tessa Johnson, Clayton Davis, and many others have all contributed tremendously to my understanding of the EXO-200 experiment.

Finally, I'd like to acknowledge the support of the University of Illinois, my instructors from Physics 496 and 499, and the Lorella M. Jones Undergraduate Research Award of the Department of Physics at Illinois for their support throughout this project as well.

Bibliography

[1] Eugene P. Wigner. Invariance in physical theory. *Proceedings of the American Philosophical Society*, 93:521–526, Mar 1949.

[2] E. C. G Stueckelberg. Die wechselwirkungskräfte in der elektrodynamik und in der feldtheorie der kernkräte, teil i (the interaction forces in electrodynamics and in the field theory of nuclear forces, part i). *Helv. Phys. Acta*, 11:225–244, 1938.

[3] Howard Georgi and S. L. Glashow. Unity of all elementary-particle forces. *Phys. Rev. Lett.*, 32:438–441, Feb 1974.

[4] Dae-Gyu Lee, R. N. Mohapatra, M. K. Parida, and Merostar Rani. Predictions for the proton lifetime in minimal nonsupersymmetric so(10) models: An update. *Physical Review D*, 51:229 – 235, Jan 1995.

[5] Hyung Do Kim and Stuart Raby. Unification in 5d so(10). *Journal of High Energy Physics 01*, 2003.

[6] Wilfried Buchmüller, Laura Covi, David Emmanuel-Costa, and Sören Wiesenfeldt. Flavour structure and proton decay in 6d orbifold guts. *Journal of High Energy Physics 09*, 2004.

[7] John Ellis, D. V. Nanopoulos, and J. Walker. Flipping su(5) out of trouble. *Physics Letters B*, 550:99–107, 2002.

[8] N. T. Shaban and W. J. Stirling. Minimal left-right symmetry and so(10) grand unification using lep coupling constant measurements. *Physics Letters B*, 291:281–287, Sep 1992.

[9] Paul Langacker. Grand unified theories and proton decay. *Physics Reports*, 72:185 – 385, June 1981.

[10] G. 't Hooft. Symmetry breaking through bell-jackiw anomalies. *Phys. Rev. Lett.*, 37:8–11, Jul 1976.

[11] C. Amsler et al. (Particle Data Group). *Physics Letters B*, 667, 2008.

[12] Carl E. Carlson and Christopher D. Carone. Low-scale quantum gravity and double nucleon decay. *Physics Letters B*, 512:121–126, July 2001.

[13] K. S. Babu, I. Gogoladze, and K. Wang. Gauged baryon parity and nucleon stability. *Physics Letters B*, 570:32–38, 2003.

[14] R. N. Mohapatra and A. Pérez-Lorenzana. Neutrino mass, proton decay and dark matter in tev scale universal extra dimension models. *Physical Review D*, 67:075015, Apr 2003.

[15] H. Nishino et al. Search for nucleon decay into charged antilepton plus meson in super-kamiokande i and ii. *Physical Review D*, 85:112001, Jun 2012.

[16] C. Regis et al. Search for proton decay via $p \to \mu^+ k^0$ in super-kamiokande i, ii, and iii. *Physical Review D*, 86:012006, Jul 2012.

[17] Jr. John C. Evans and Richard I. Steinberg. Nucleon stability: A geochemical test independent of decay mode. *Science Magazine*, pages 989–991, Sep 1977.

[18] H.O. Back et al. New limits on nucleon decays into invisible channels with the borexino counting test facility. *Physics Letters B*, 563(12):23 – 34, 2003.

[19] R. Bernabei et al. Search for the nucleon and di-nucleon decay into invisible channels. *Physics Letters B*, 493:12–18, 2000.

[20] R. Bernabei et. al. Search for rare processes with dama/lxe experiment at gran sasso. *European Physics Journal A*, 27:35–41, 2006.

[21] *Nuclear Data Sheets*, Accessed online at http://www.nndc.bnl.gov, 2010.

[22] M. Auger et al. Search for neutrinoless double-beta decay in ^{136}Xe with exo-200. *Phys. Rev. Lett.*, 109:032505, Jul 2012.

[23] J.B. Albert et al. Search for majorana neutrinos with the first two years of EXO-200 data. *Nature*, 510:229234, 2014.

[24] N. Ackerman et al. Observation of two-neutrino double-beta decay in xe136 with the exo-200 detector. *Phys. Rev. Lett.*, 107:212501, Nov 2011.

[25] J. B. Albert et al. Improved measurement of the $2\nu\beta\beta$ half-life of ^{136}Xe with the EXO-200 detector. *Phys. Rev. C*, 89:015502, Jan 2014.

[26] M. Auger et al. The exo-200 detector, part i: detector design and construction. *Journal of Instrumentation*, 7:P05010, May 2012.

[27] R. Neilson, F. LePort, A. Pocar, K.S. Kumar, A. Odian, et al. Characterization of large area {APDs} for the exo-200 detector. *Nuclear Instruments and Methods in Physics Research Section A: Accelerators, Spectrometers, Detectors and Associated Equipment*, 608(1):68 – 75, 2009.

[28] S. Agostinelli et al. Geant4 - a simulation toolkit. *Nuclear Instruments and Methods*, A:250–303, 2003.

[29] J. Allison et al. Geant4 developments and applications. *IEEE Transactions on Nuclear Science*, 53:270 – 278, 2006.

[30] David John Auty. (internal publication) exo-200 weak $=^{226}$ra source certification, v1.0. Sept 2013.

[31] E. Conti, R. DeVoe, G. Gratta, T. Koffas, S. Waldman, J. Wodin, D. Akimov, G. Bower, M. Breidenbach, R. Conley, M. Danilov, Z. Djurcic, A. Dolgolenko, C. Hall, A. Odian, A. Piepke, C. Y. Prescott, P. C. Rowson, K. Skarpaas, J-L. Vuilleumier, K. Wamba, and O. Zeldovich. Correlated fluctuations between luminescence and ionization in liquid xenon. *Phys. Rev. B*, 68:054201, Aug 2003.

[32] Rene Brun and Fons Rademakers. Root - an object oriented data analysis framework. *Nucl. Inst. & Meth. in Phys. Res. A*, 389:81–86, 1997.

[33] S. S. Wilks. The large-sample distribution of the likelihood ratio for testing composite hypotheses. *The Annals of Mathematical Statistics*, 9(1):60–62, 03 1938.

[34] J.B. Albert et al. Search for majoron-emitting modes of double-beta decay of ^{136}xe with exo-200. 2014.

[35] Matthew Redshaw, Elizabeth Wingfield, Joseph McDaniel, and Edmund G. Myers. Mass and double-beta-decay q value of ^{136}Xe. *Phys. Rev. Lett.*, 98:053003, Feb 2007.