Board 1 Report

Sarthak Samal

Introduction

This board features a 5v DC powered LMC555 timer powering 4 different LEDs under load. The purpose of this board is to familiarize ourselves with the PCB manufacturing workflow and gain practice with the best design practices for designing a simple, 2-layer PCB.

To demonstrate this, the following objectives were employed.

1. Complete a hand-drawn schematic to demonstrate the basic concept of the board.
2. Create a solderless breadboard circuit as a proof of concept.
3. Recreate the SBB design on Altium.
4. Perform a CDR and order board.
5. Assemble board and test for functionality.

Plan of Record

What does it mean to work?

1. The board must have all 5 LEDs powered when switches are turned on, with the brightness reducing as the resistance increases.
2. The LEDs must appear to be continuously powered rather than pulsing.
3. The voltage reading at the power supply must read 5v with no noise present on the power line.
4. The signal from the 555-timer must be a square wave with a frequency of 300-700 Hz and a duty cycle of 50%-75%, with the signal voltage reading being consistent with the calculations made for each LED.
5. No large voltage drops should be read on the 5v power line

Features of the board:

1. 2-layer board, consisting of a signal layer and the common ground return plane
2. 5v DC power plug to power the board
3. 1206 components for simple soldering
4. 2 in. x 3.5 in. board shape for cheap production and convenience

Noise Reduction:

1. Decoupling capacitors placed as close as possible to power source and IC components.
2. Use of minimal cross-unders.
3. Cross-unders kept as short as possible.
4. Avoided long interconnects running close together where possible.

Risk Reduction:

1. Trace widths were varied to distinguish between the signal and power lines.
2. Switches were used where necessary to control power input and timer output throughout the board.
3. All components, resistors and switches were labeled, including the board itself.
4. Multiple test points were used for easy debugging.
5. Overall schematic block structure was kept consistent for easy comparison between the schematic and PCB layout.

Key Measurements:

1. 5v coming from the plug into the board.
2. A square wave pulse with a frequency of 300-700 Hz with a duty cycle of 50%-75% from the timer.
3. A square wave with a rise time of ~72.4ns.
4. A current of .07, .011, .0033 and .00033 amps through the 50-, 300-, 1k- and 1M ohm resistors, respectively.

Components:

(All components are 1206 unless otherwise listed)

1. NE555
2. Red LED x5
3. 1uF Capacitor x2
4. 22 uF Capacitor
5. Switch x2
6. 47 Ohm Resistor x1
7. 300 Ohm Resistor x1
8. 1000 Ohm Resistor x1
9. 1M Ohm Resistor x1
10. Test Point x6

Constructing the Circuit:

Before physically constructing the circuit on the breadboard, a quick sketch of the circuit was made to ensure that the circuit is feasible before committing any components. This also allows for preliminary calculations with which to compare the breadboard circuit.

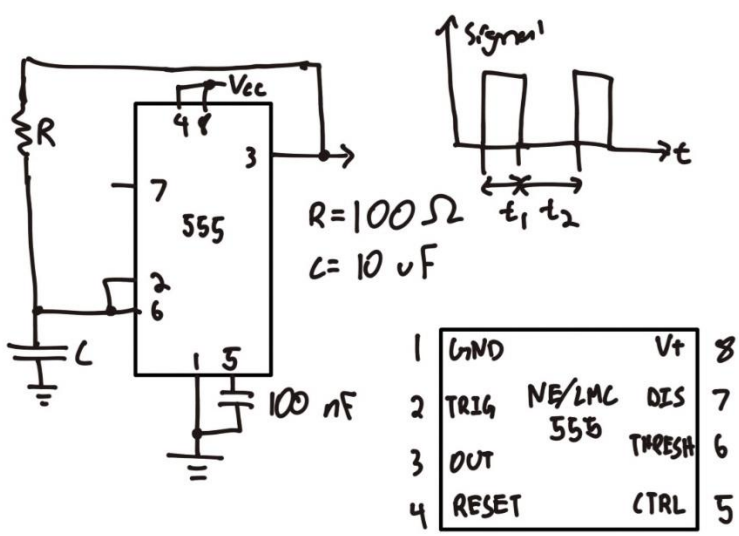

Fig 1. A napkin sketch of the 555-timer circuit

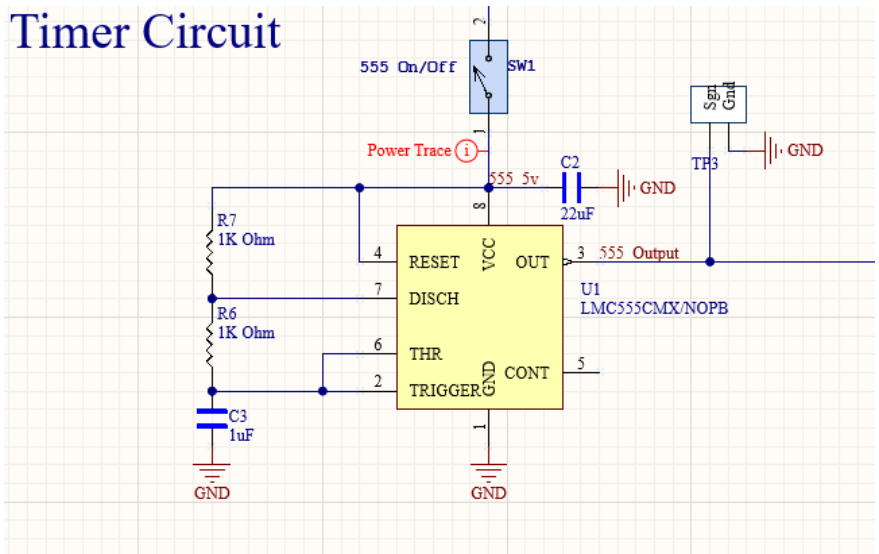

Fig 2. 555-timer circuit created in Altium

Note: Due to the lack of familiarity with the Altium software, a video tutorial for a different 555-timer circuit was used. Nevertheless, the napkin sketch and calculations were included to practice the circuit board design workflow. Calculations made from this point on were done using the napkin sketch.

After building the circuit board shown in figure 2, the power conditioning and LED sections of the boards were added.

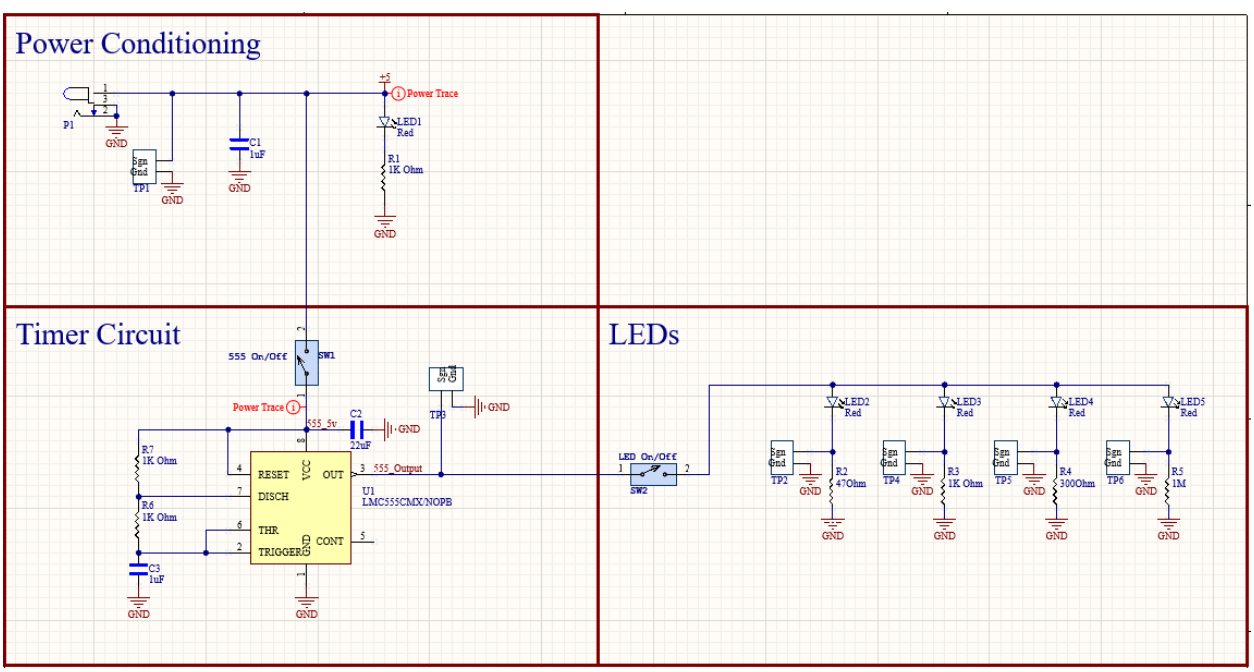

Fig 3. Full schematic of the 555 timer PCB

Key Calculations:

After a quick sketch of the 555 circuit, the duty cycle and frequencies were calculated to ensure compliance with the design specifications.

$$f = \frac{1}{T} = \frac{1}{1.386\,RC}$$

$$f = \frac{0.722}{RC} = 500$$

Key Equations:

$$T = 2(.693)RC$$

$$f = \frac{.722}{RC}$$

$$\therefore .722 = 500(RC)$$

$$.001444 = RC$$

if $C = 10\,\mu F$ ...

$$\frac{.001444}{10 \times 10^{-6}} = R = \underline{144.4\ \Omega}$$

Fig 4. Resistor and capacitor calculations assuming a 50% duty cycle and 500 fequency square signal

According to figure 4, we see that a 144-ohm resistor and 10 uF capacitor will give a square signal that meets the criteria for a working 555-timer circuit. However, a 144-ohm resistor was not available for use, therefore, a 100-ohm resistor was used. This increased our frequency to 722 Hz. Due to component restraints and the fact that there is no need for exact precision in this board, this frequency will suffice. With these values, we can proceed to construct the SBB version of this circuit.

SBB Version of the Circuit

Having shown that the proposed 555-timer circuit works in theory, a physical version of the board using a solderless breadboard was built as a proof of concept. This way, we can ensure that the circuit works in practice as well before committing any resources.

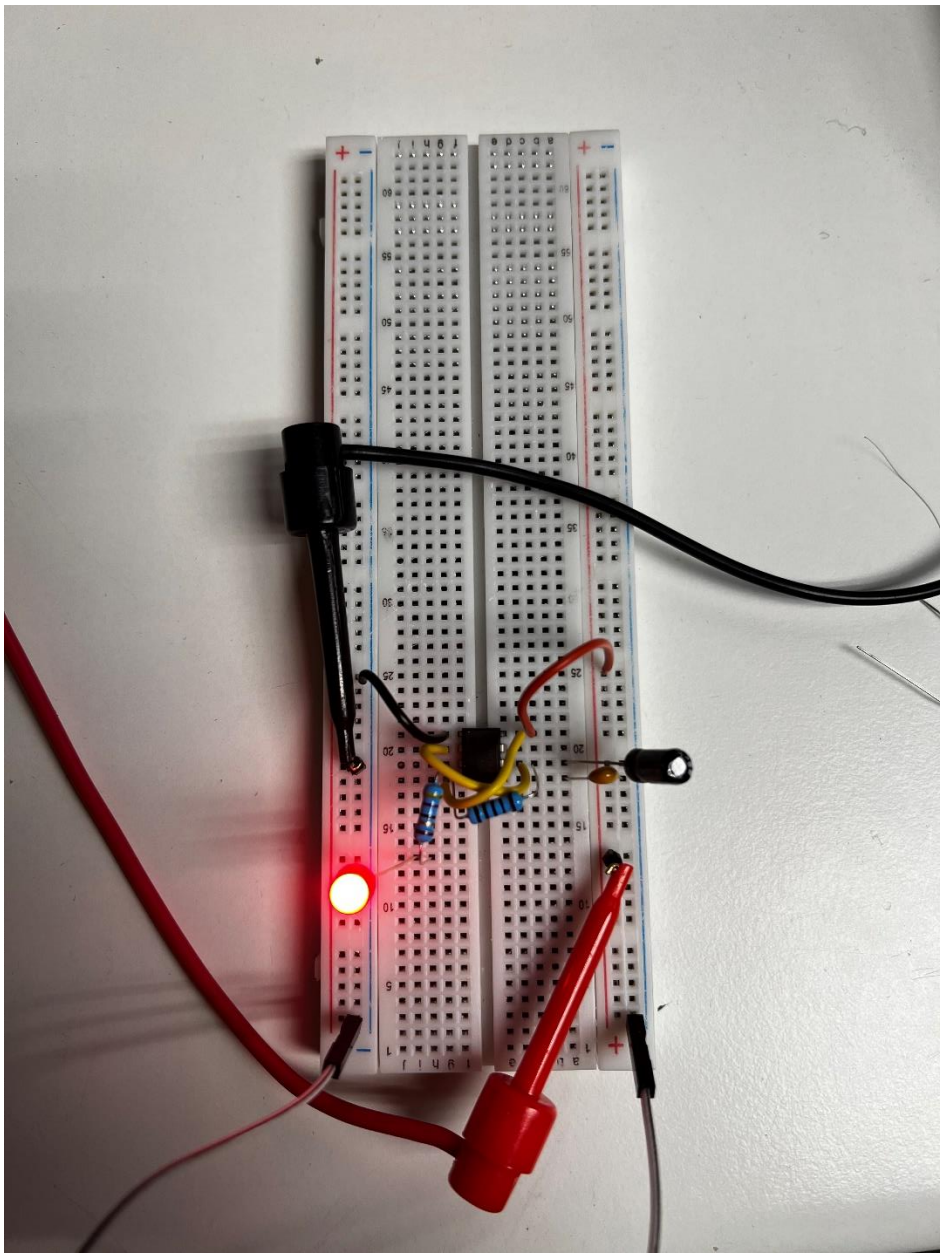

Fig 5. SBB version of the napkin sketch in figure 1

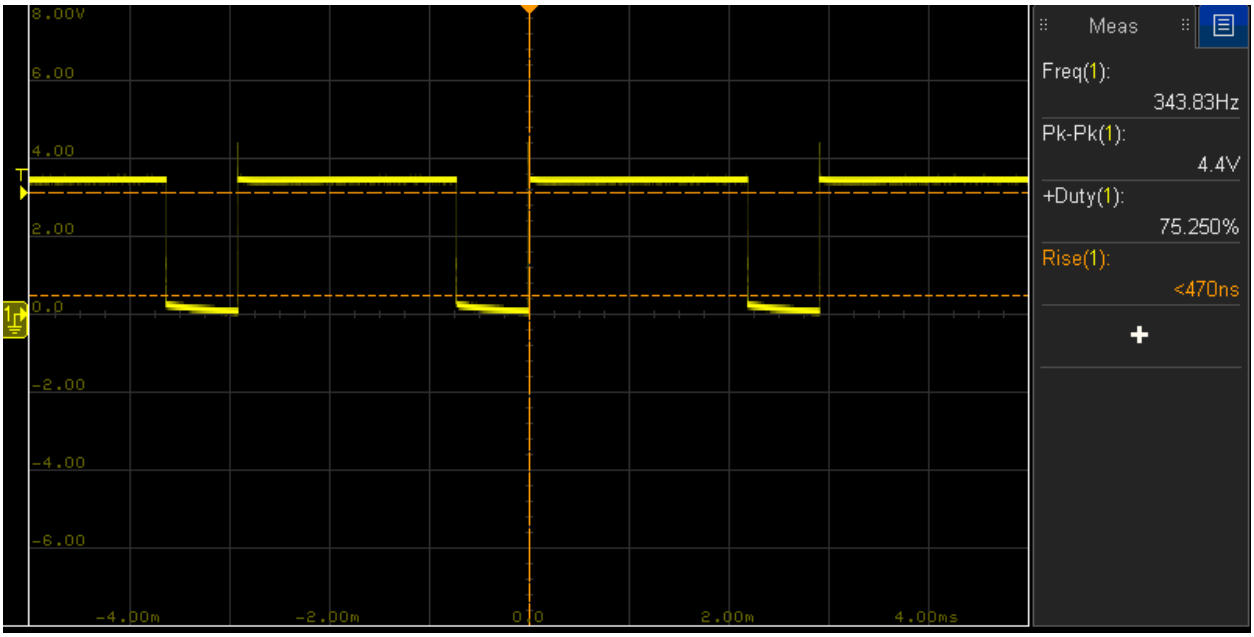

Fig 6a. Readings from the SBB circuit with the NE555

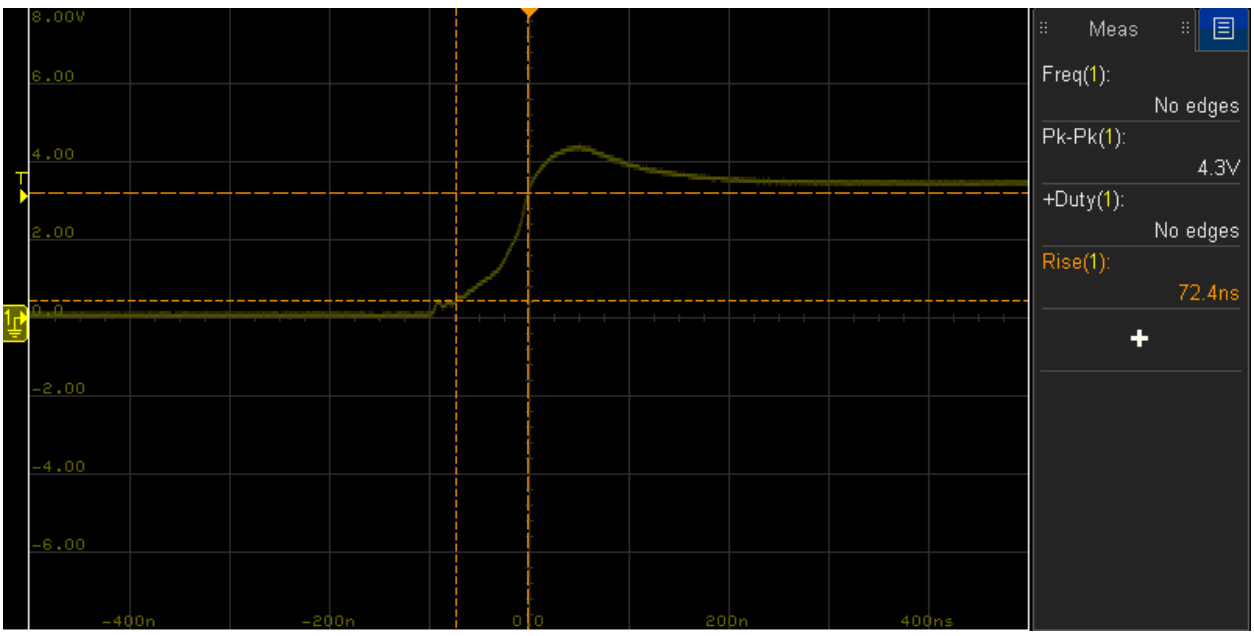

Fig 6b. Rise time of the NE555 timer

As we can see from the readings in figure 6, the 555-timer circuit design fits well within the design specifications. The LMC555 was also used to note any differences between the fast and slow timers.

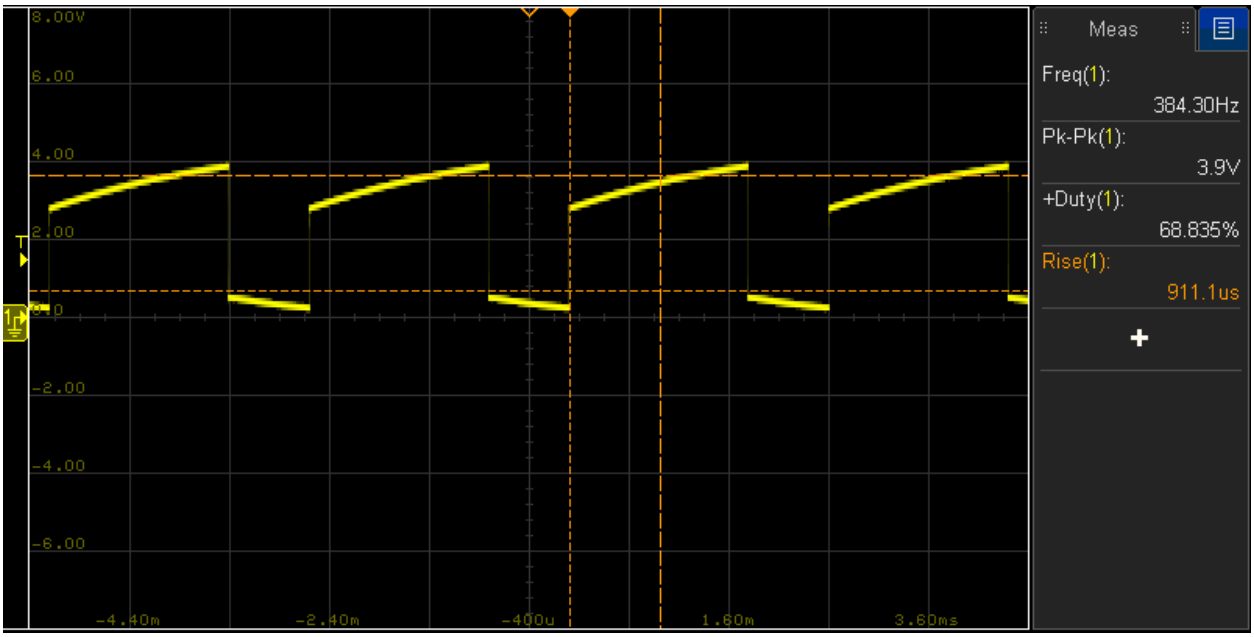

Figure 7a. Reading from the SBB circuit with the NE555

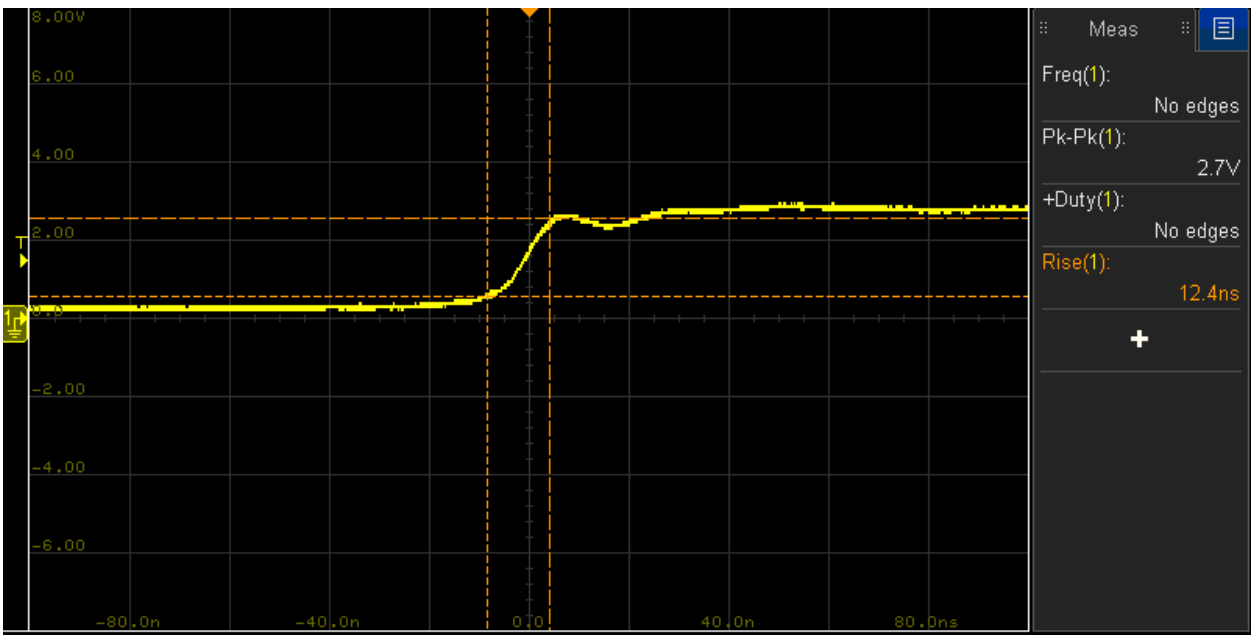

Figure 7b. Rise time of the NE555 timer

Here, we see that the NE555 shows a more consistent square wave whereas the LMC555, while having a faster rise time, has a sloped peak. Because of this, the NE555 timer will be used.

Note: After a review of the reading by a second set of eyes, it is known now that the reading for the LMC555 is not consistent with what is expected, there should be a flatter peak with some noise after switching. This is likely due to a faulty circuit design, going forward, the circuit on the SBB will be built with more caution. In either case, the NE555 will be used as the faster switching time is not needed for this board.

Having proved this, we proceed to design the PCB with the slow timer.

Designing the PCB:

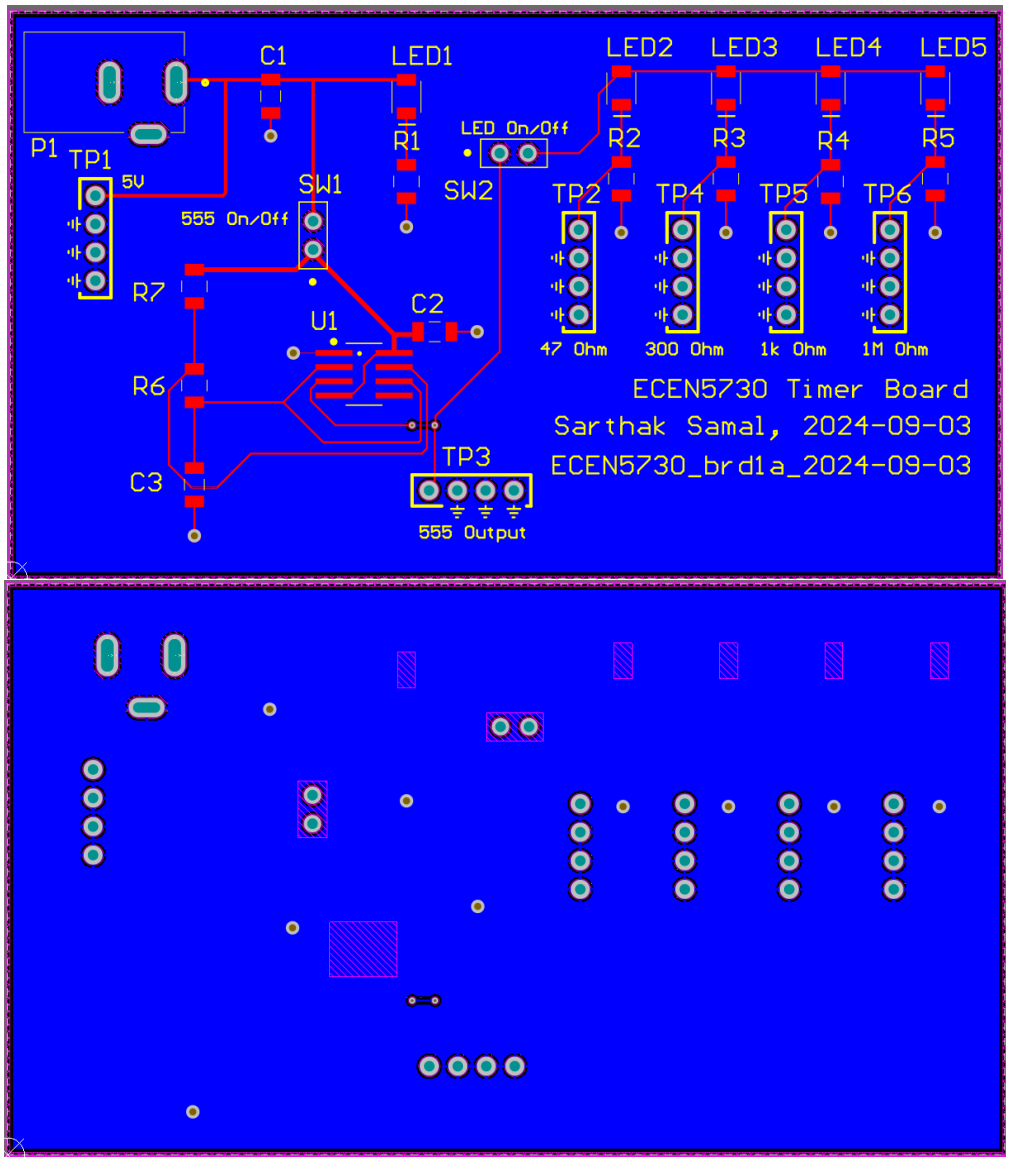

Fig 8: Top (a) and Bottom layer of the designed PCB (b).

Some key features to note on this board that contribute to reduced noise:

The board consists of a signal plane and common ground plane. The inclusion of a ground plane is to limit crosstalk due to common return lines between traces and allow for a stable clock signal.

The board also avoids any long parallel interconnects to avoid crosstalk due to close signal traces.

There are multiple decoupling capacitors featured on the board located close to the power line and 555 timer. This is to reduce any extraneous noise due to fast switching signals from the 555 timer.

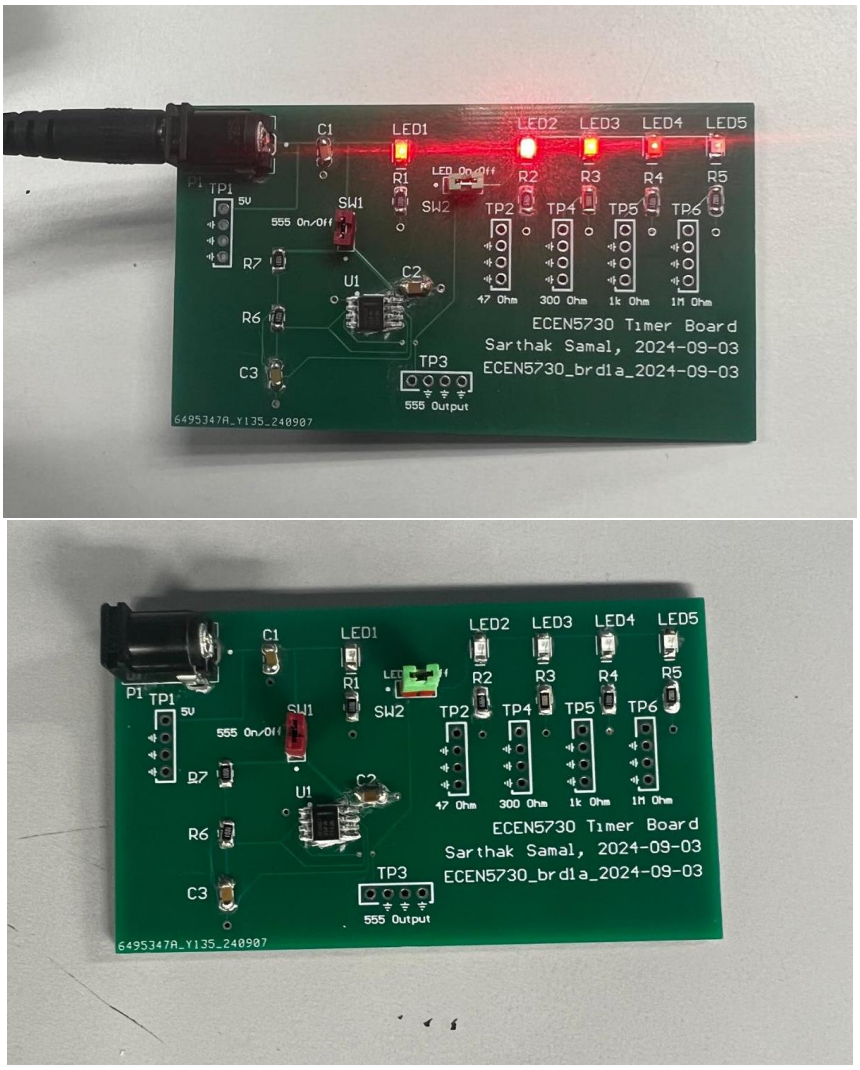

Fig 9: Assembled PCB powered (top) and unpowered (bottom)

1206 parts were used with thermal relief vias for easy soldering. As expected, all of the parts were easily soldered to the baord.

There were no standout issues with soldering the components apart from the dried solder flux that interfered with the connection on the Vcc pin (i.e. the pin was not properly soldered). After cleaning the flux and resoldering the pin, the board was properly powered. Moving forward, the solder flux will be cleaned off the board before testing the board.

Apart from minor difficulties, the board works as intended to the naked eye as the LEDs were all lit with no visible flashing from leds 2 to 4, which would've been an indication of faulty wiring of the 555 circuit. With the board properly powered, key measurements were taken.

Key Measurements:

To reiterate, the key measurements that indicate a properly functioning board are as follows.

1. 5v coming from the plug into the board. (With no noise)

2. A square wave pulse with a frequency of 300-700 Hz with a duty cycle of 50%-75% from the timer.
3. A square wave with a rise time of ~72.4ns.
4. A current of .07, .011, .0033 and .00033 amps through the 1M-, 1k-, 300- and 50 ohm resistors, respectively.

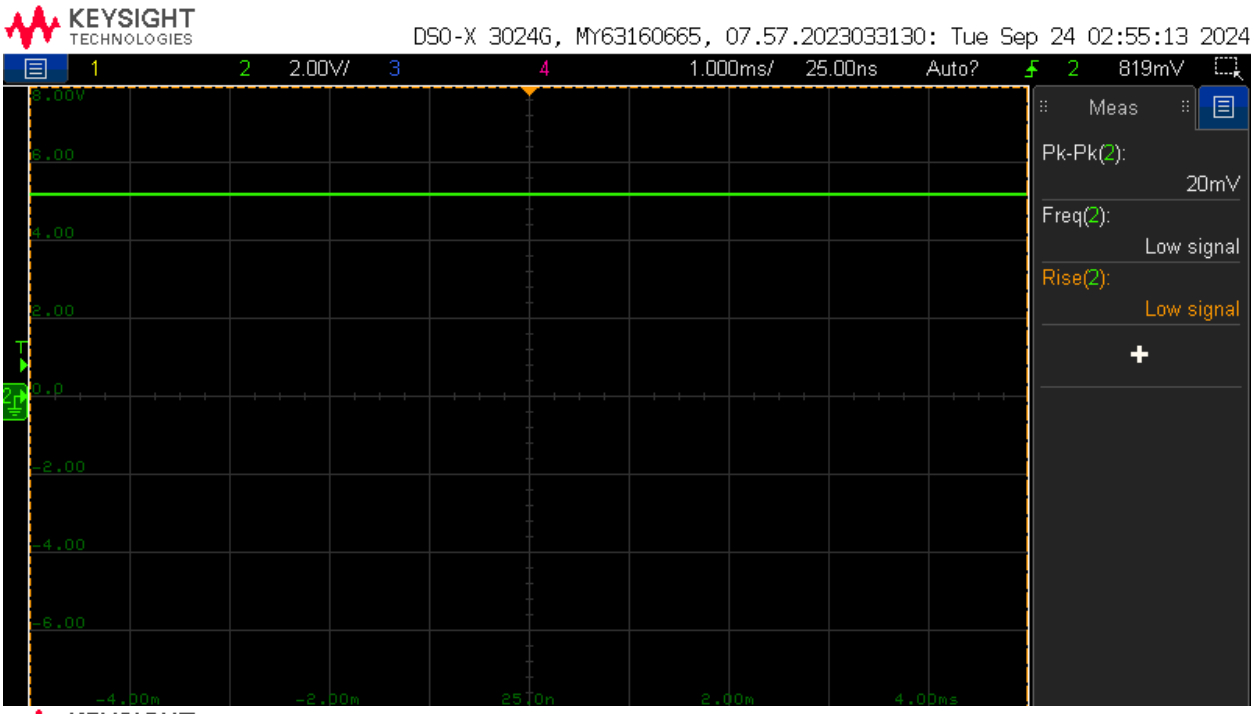

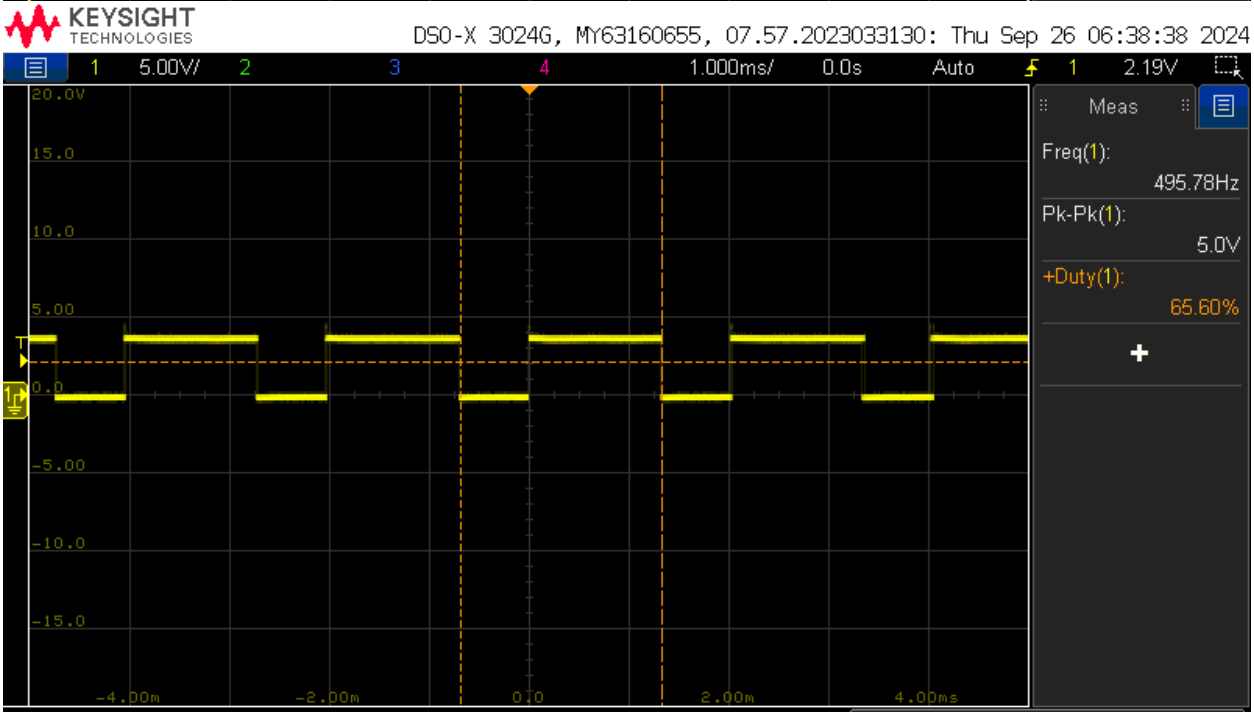

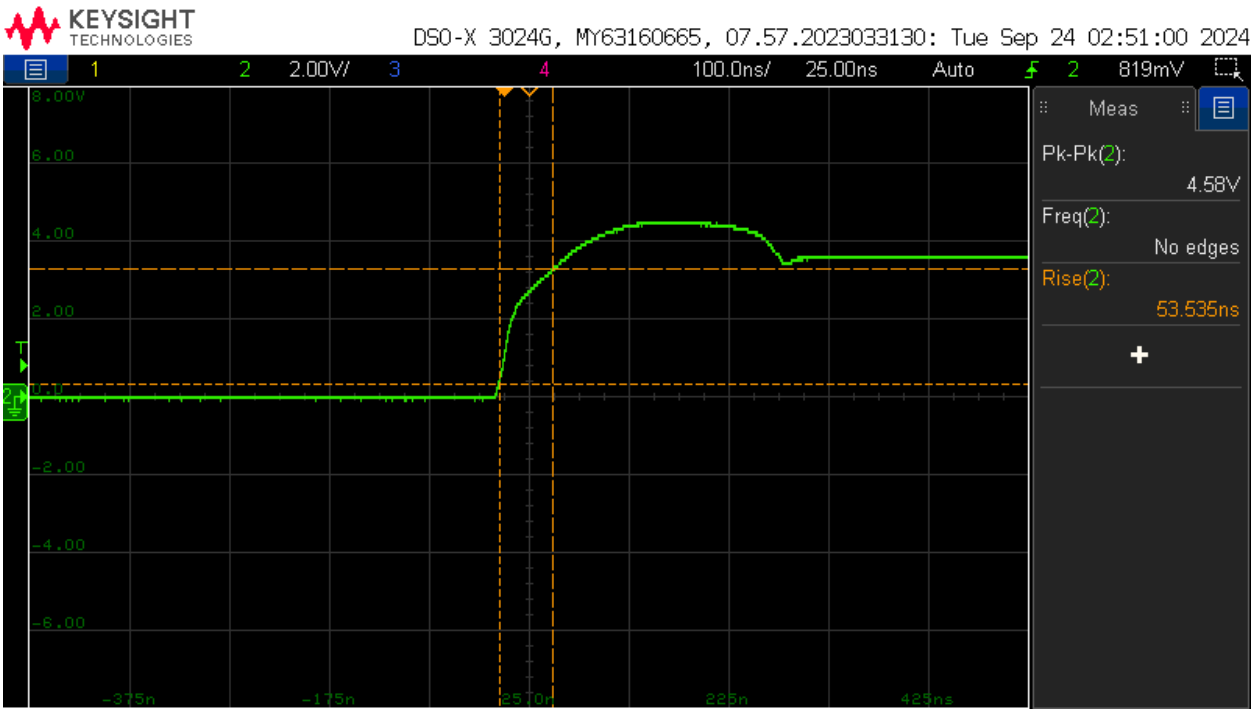
KEYSIGHT TECHNOLOGIES
DSO-X 3024G, MY63160665, 07.57.2023033130: Tue Sep 24 02:51:00 2024
1
2
2.00V/
3
4
100.0ns/
25.00ns
Auto
2
819mV
8.00V
6.00
4.00
2.00
0.0V
-2.00
-4.00
-6.00
-375n
-175n
25.0n
225n
425ns
Meas
Pk-Pk(2):
4.58V
Freq(2):
No edges
Rise(2):
53.535ns

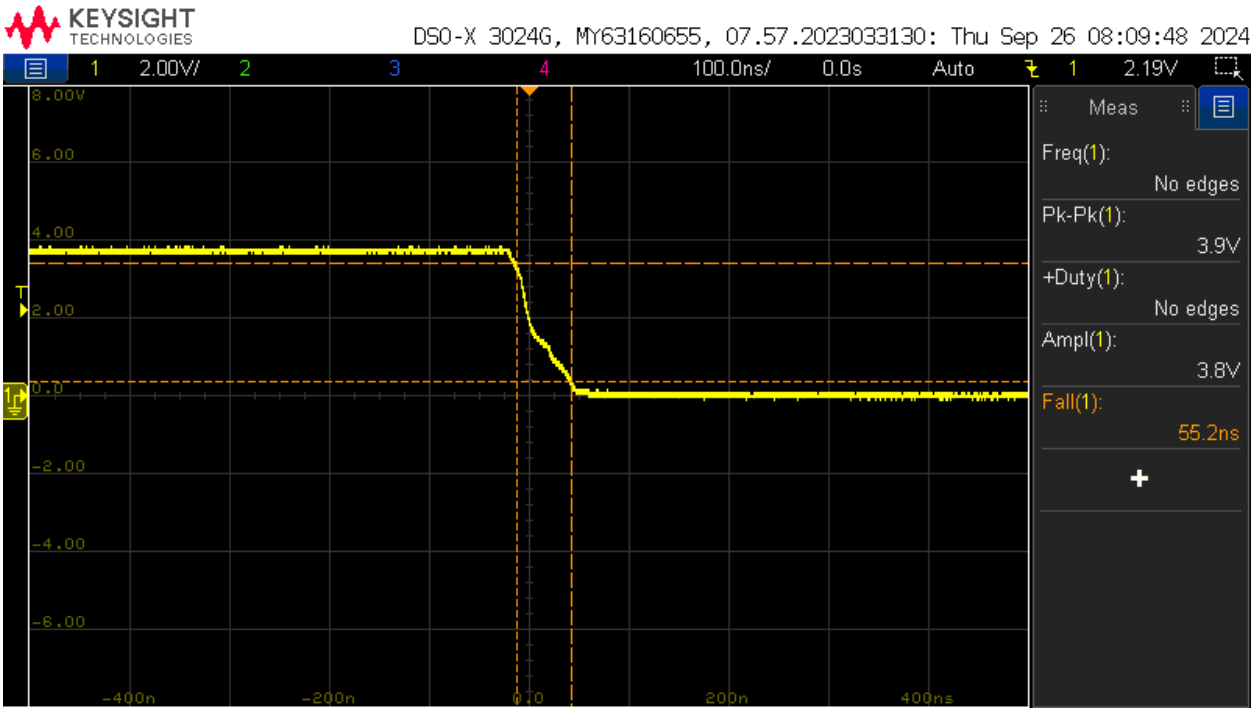
KEYSIGHT TECHNOLOGIES
DSO-X 3024G, MY63160655, 07.57.2023033130: Thu Sep 26 08:09:48 2024
1
2.00V/
2
3
4
100.0ns/
0.0s
Auto
1
2.19V
8.00V
6.00
4.00
2.00
0.0
-2.00
-4.00
-6.00
-400n
-200n
0.0
200n
400ns
Meas
Freq(1):
No edges
Pk-Pk(1):
3.9V
+Duty(1):
No edges
Ampl(1):
3.8V
Fall(1):
55.2ns

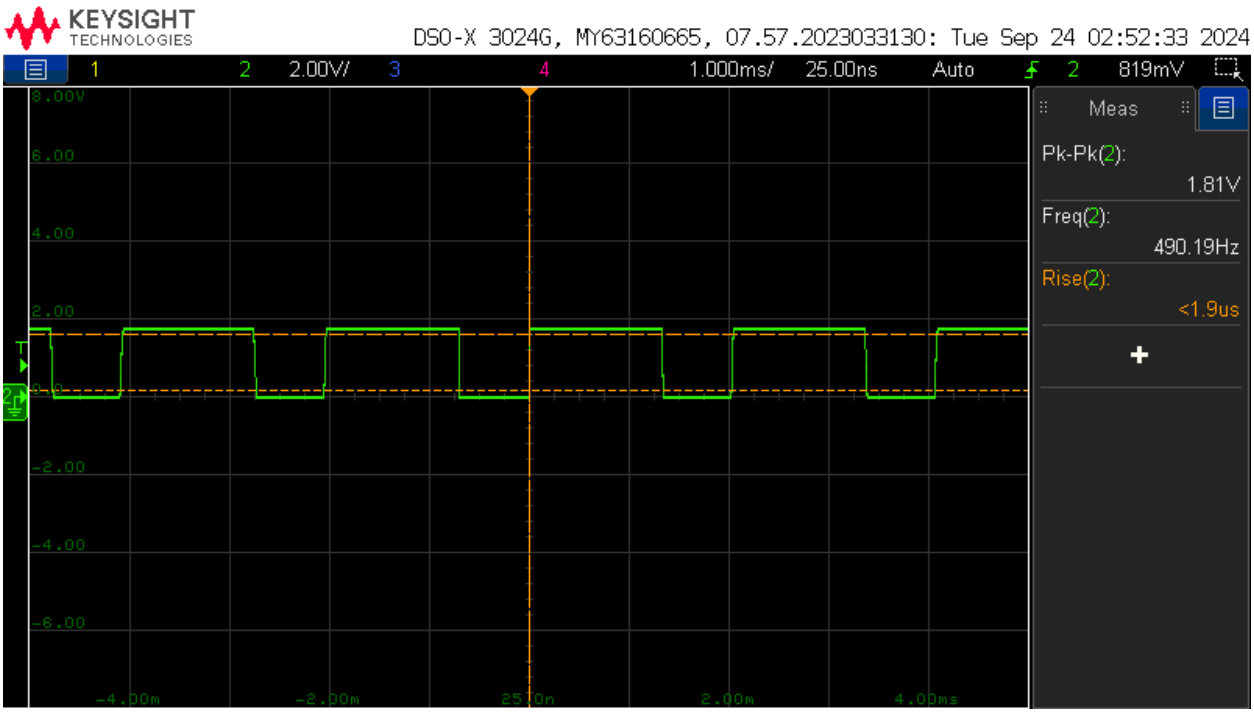

Fig 10: (In descending order) 5v power reading, 555 output, rise time, fall time and waveform at LED 2 to 5.

NOTE: There was no need to have multiple test points at each resistor, since the voltge read across the LEDs would've been the same. A single test point at one of the resistors woul have sufficed. Additionally, these captures were taken at different points in time, which explains why different channels were used

The use of different channels serves no additional purpose to the readings and was an oversight. Only one channel will be used moving forward to avoid any confusion.

According to figure 10, the board is able to produce a waveform with a frequency of 495 Hz and 65% duty cycle. Additionally, there is no noticeable voltage drops (i.e. noise) on the 5v power line, showing that the best design practices for PBD design were followed. The rise time of the signal is also what we expect from an NE555 timer. In the SBB version of the circuit, the NE555 timer produced a wave with a rise time of 72 ns, similar to the 53 ns reading from the PCB. All of the calculations so far are consistent with what was expected of this board, the final measurements will be the current going through each of the resistors.

Current Calculations:

for 47Ω: $I = \frac{1.81}{47\Omega} = 38.5\,mA$

300Ω: $I = \frac{1.81}{300} = 6\,mA$

$1K\Omega$: $I = \frac{1.81}{1000} = 1.8\,mA$

$1M\Omega$: $I = \frac{1.81}{1\times10^6} = 1.81\,\mu A$

Fig 10: Current across each resistor

The current going through each resistor is shown in figure 10. Something to note is that the values calculated here are very different from the values that were determined in the POR. However, knowing that a current of 10-20 mA is required to light an LED, it is likely that calculations in figure 10 are what should have been expected. Something that was not taken into consideration when writing the POR was the voltage drop across the LED. The use of the full 5v p-p waveform instead of the 1.81v p-p waveform may explain this discrepancy.

Since these calculations are more accurate than the ones in the POR, we will still consider this board to be "working". Moving forward, extra care will be given to sources of voltage drops other than resistors.

Conclusion and Key Takeaways

The purpose of this lab is to familiarize ourselves with the PCB manufacturing workflow and gain practice with the best design practices for designing a simple, 2-layer PCB. Once again, the criteria for a successful board was as follows:

1. The board must have all 5 LEDs powered when switches are turned on, with the brightness reducing as the resistance increases.
2. The LEDs must appear to be continuously powered rather than pulsing.
3. The voltage reading at the power supply must read 5v with no noise present on the power line.
4. The signal from the 555-timer must be a square wave with a frequency of 300-700 Hz and a duty cycle of 50%-75%, with the signal voltage reading being consistent with the calculations made for each LED.
5. No large voltage drops should be read on the 5v power line

After assembly and testing, all criteria were met, indicating that a successful 555 timer has been made with best circuit design practices.

Following the workflow and being exposed to circuit design using Altium and the difficulties that come with it, the following points can be taken away.

1. Pay close attention to the values you have calculated and readings from the actual circuit. Had the discrepancy between the calculated value and measured value been noticed sooner, the circuit could have been redone for a stronger report.

2. Always get a second set of eyes to review your work. This was helpful in the design of the PCB as it helped me reduce the number of cross-unders and achieve a better design overall. Had a review of the SBB circuit been done, the error may have been found and the readings found for the LMC555 may have been more consistent with common findings.

3. There is no right answer when finding which timer to use. Both the NE555 and LMC555 have their own use cases which should be considered so that the best timer can be used for depending on the board. If a board needs a faster, more precise switch then the LMC555 should be used, otherwise, if there are components on the board that need a higher drive current, the NE555 should be used.

4. Oscilloscopes should be used throughout the process of developing the SBB circuit to debug and identify any problems in the design to avoid wasting resources on making and ordering the PCB.

5. Put extra care in recognizing other components that induce a voltage drop such as LEDs. This would lead to more accurate calculations and expectations.